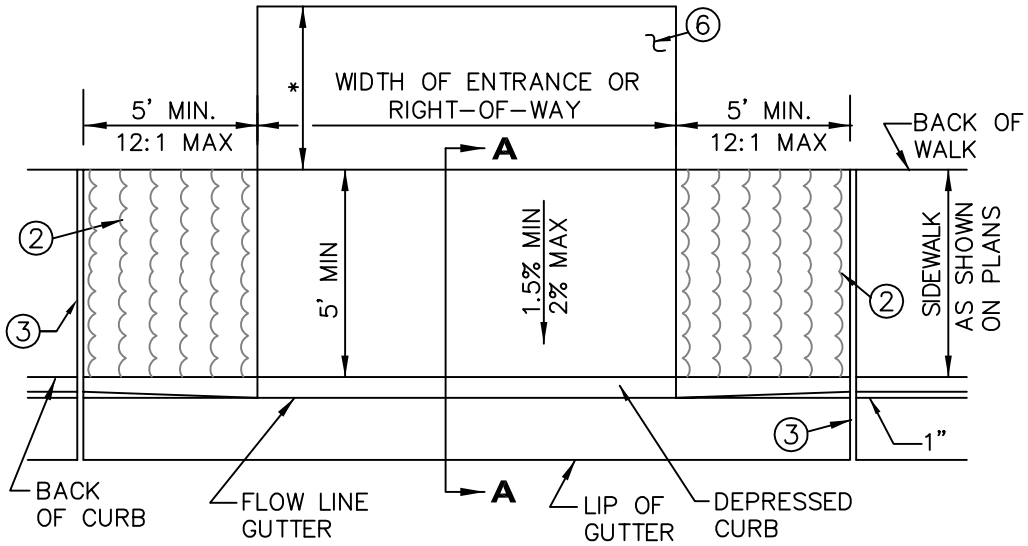

TYPE A - WITHOUT RETAINING CURB

*SEE PLANS FOR ALLEY SURFACING REQUIREMENTS

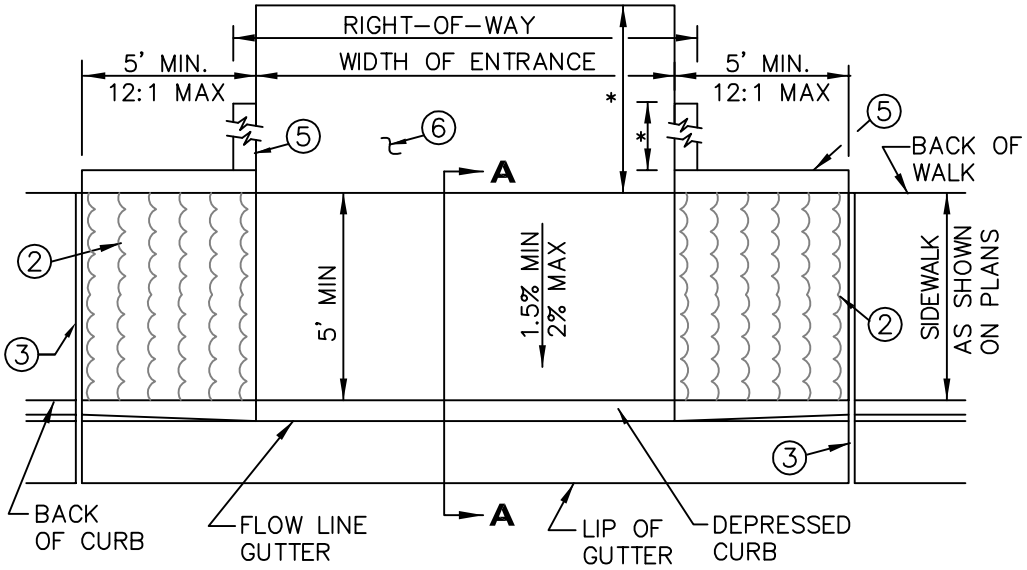

TYPE B - WITH RETAINING CURB

* SEE PLANS FOR RETAINING CURB LENGTHS,
TOP OF CURB ELEVATIONS, AND ALLEY SURFACING REQUIREMENTS

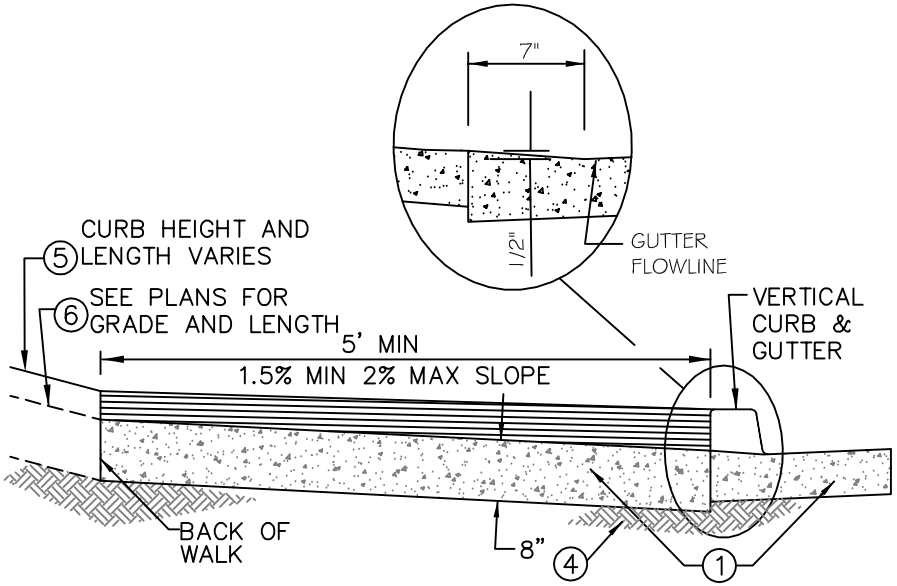

SECTION A-A

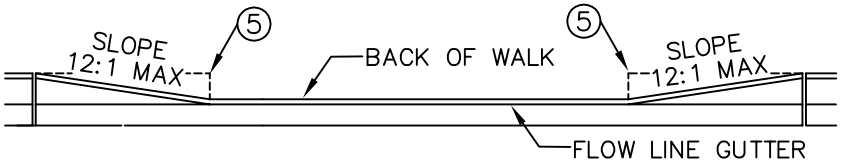

ELEVATION

NOTES:

1. CLASS "A" CONCRETE PER SECTION 725.
2. LIMITS OF HEAVY ROUGH BROOM FINISH.
3. EXPANSION JOINTS PER SECTION 340.
4. SUBGRADE PREPARATION PER SECTION 301.
5. SINGLE CURB PER DETAIL 222, TYPE "B".
6. ALLEY SURFACING PER PLANS.

DETAIL NO.				REVISED	DETAIL NO.
260	MARICOPA ASSOCIATION of GOVERNMENTS	STANDARD DETAIL ENGLISH	ALLEY ENTRANCE (WITH VERTICAL CURB AND GUTTER)	09/05/2012 DRAFT	260