P.O. Box 52025
Phoenix, AZ 85072-2025
(602) 236-5900

Case 11-16

DATE: July 11, 2011

TO: MAG Specifications and Details Committee Members

FROM: Peter Kandaris, SRP Representative
Outside of Right-of-Way Working Group

RE: **Section 415: Steel Flexible Metal Guardrail**

Purpose: Existing MAG guardrail standards (Section 415 and Details 135-1 thru 4) are outdated and generally not followed by MAG agencies. Some details may not be safe to use.

Revisions: a) Adopt MCDOT supplemental Section 415 in whole as a replacement section, with minor revisions to referenced details. Replace reference to details with selected ADOT guardrail details and limited use of MCDOT details where ADOT details are not sufficient.

b) Delete Details 135-1 through 4.

The revisions include standard modern guardrail materials and construction, but exclude oncoming traffic terminal end options as these seem to be where ADOT and MCDOT have the greatest difference and the most variety exists between agencies. Attached is a proposed revised Section 415 that includes the MCDOT supplemental section, but with references ADOT details (except for measurement).

SECTION 415

FLEXIBLE METAL GUARDRAIL

415.1 DESCRIPTION:

~~This~~ The work under this section shall consist of furnishing all materials, constructing ~~metal beam~~new guard-rail~~ing~~, and delineating guardrail sections at the locations ~~and in accordance with the details~~ shown on the plans, and as ~~specified in the special provisions~~ per the requirements of this section.

415.2 MATERIALS ~~AND CONSTRUCTION~~:

~~Materials and construction for the railings shall conform to the following requirements:~~

The rail elements, ~~terminal sections,~~ bolts, nuts and other fittings shall conform to the specifications of AASHTO M-180, except as modified in this specification. ~~The edges and center of the rail element shall contact each post or block. Rail element joints shall be lapped not less than 12 1/2 inches and bolted.~~ The rail metal shall be open hearth, electric furnace, or basic oxygen steel and, in addition to conforming to the requirements of AASHTO M-180, shall withstand a cold bend, without cracking of 180 degrees around a mandrel of a diameter equal to 2 1/2 times the thickness of the plate.

~~The ends of each length of railing shall be fitted with terminal sections.~~

Three certified copies of mill test reports of each heat from which the rail element is formed shall be furnished to the Engineer.

All material shall be new.

Railing Parts furnished under these specifications shall be interchangeable with similar parts regardless of source. All surfaces of guardrail elements that are exposed to traffic shall present a uniform, pleasing appearance and shall be free of scars, stains or corrosion.

Nails shall be 16 penny common galvanized. Nails for retainer strap shall be 10 penny common, galvanized.

Bolts shall have shoulders of such shape as will prevent the bolts from turning.

Unless otherwise specified the rail elements, terminal sections, bolts, nuts, and other fittings shall be galvanized in accordance with Section 771. Where galvanizing has been damaged, the coating shall be repaired in accordance with Section 771.

Prismatic guardrail reflector tabs shall have a minimum thickness of 3/16", and be either galvanized steel or ultraviolet-resistant plastic. Prismatic guardrail-mounted barrier markers shall have an ultraviolet-resistant reflective surface, be secured to the body in accordance with the manufacturer's recommendations, and have a trapezoidal-shaped body as shown in the Reflector Tab Detail of *ADOT Roadway Standard Drawing C-10.01*.

~~Posts, including blocks, shall be construction grade, Douglas Fir, free of heart center.~~

Timber for posts and blocks shall be rough sawn (unplanned) or S4S with the nominal dimensions indicated. Any species or group of woods graded in accordance with the requirements for Timber and Posts of the Western Wood Products Association may be used. Timber shall be No. 1 or better, and the stress grade shall be as follows:

6" by 8" Post and Block	1200 psi
8" by 8" Post and Block	900 psi
10" by 10" Post and Block	900 psi

When the plans show guardrail systems using 8” by 8” timber posts and blocks, the Contractor may use 8¼” nominal size posts and blocks with a stress grade of 825 pounds per square inch. Substitution of 8” by 8” posts for 6” by 8” post may be approved on a per project basis by the engineer.

At the time of installation, the dimensions of timber posts and blocks shall vary no more than plus or minus ½” from the nominal dimensions as specified on the project plans.

The size tolerance of rough sawn block in the direction of the bolt holes shall vary no more than plus or minus 3/8”. Only one type of post and block shall be used for any one continuous length of guardrail.

~~The posts and blocks~~All timber shall ~~be pressure treated~~have a preservative treatment ~~after fabrication with oil borne pentachlorophenol, or coppernaphthenate,~~ as ~~provided in~~per the requirements of Section 779.

415.3 CONSTRUCTION REQUIREMENTS:

415.3.1 General: The construction of the various types of guardrail shall include the assembly and erection of all component parts complete at the locations shown on the project plans or as requested by the Engineer. All materials shall be new except as provided for under the project plans.

General guardrail construction shall be done in accordance with ADOT Roadway Standard Drawings C-10.01, C-10.02 and C-10.03. Departure end terminals shall be done in accordance with ADOT Roadway Standard Drawing C-10.8

Terminal sections shall be installed in accordance with the manufacturer’s recommendations.

Workmanship shall be equivalent to good commercial practice and all edges, bolt holes and surfaces shall be free of torn metal, burrs, sharp edges and protrusions.

The various types of guardrail shall be constructed with wood posts and wood blocks, except where other post materials to be used are noted on the plans.

The bolted connection of the rail element to the post shall withstand a 5,000 pound pull at right angles to the line of the railing. ~~The~~ All metal work shall be fabricated in the shop., ~~and n~~No punching, cutting or welding ~~will be permitted~~shall be done in the field, except as provided for by the project plans. All metal cut in the field shall be cleaned and the galvanizing repaired in accordance with Section 771.

Where field cutting or boring of wood posts and blocks is permitted, the affected areas shall be thoroughly swabbed with at least two passes of the same type of wood preservative as initially used.

Where Wood posts with rectangular sections are used, the posts shall be set so that the longest dimension is perpendicular to the rail.

All bolts shall extend beyond the nuts a minimum of two threads, except that all bolts adjacent to pedestrian traffic shall be cut off flush to the nut.

Bolts extending more than 2” beyond the nut shall be cut off to less than ½” beyond the nut.

Unless otherwise shown on the plans, bolts shall be torqued as follows:

Diameter of Bolt	Torque, Foot/Pounds
5/8”	45-50
3/4"	70-75
7/8” and larger	120-125

All bolts, other than those specified to be torqued, shall be securely tightened.

When guardrail is being constructed under traffic, the work shall be conducted so as to constitute the least hazard to the public. Guardrail work shall be performed in the direction of traffic flow when feasible.

Any section of guardrail that is removed for modification shall be replaced within five calendar days of the date the guardrail is removed, unless otherwise directed by the Engineer. At the end of each day, incomplete guardrail sections having an ~~Rail elements shall be lapped so that the~~ exposed end~~s~~ toward oncoming ~~will not face approaching~~ traffic~~.~~ shall have a buffer end section (MAG Standard Detail 135-4, Detail No. 5 Buffer End Section) bolted securely in place together with approved overnight traffic control devices in place.

415.3.2 Delineation: The maximum spacing between reflector tabs shall not exceed six posts. The slotted part of the tab shall be installed under the mounting bolt head so that the Reflectorized surface of the tab faces oncoming traffic. The exposed ends of the slotted part of the tab shall be bent up against and then over the top of the bolt head. The color of the reflective portion of the barrier markers shall conform to the color of the adjacent edge line. Silver-faced reflector tabs shall be installed on the right hand side of all roadways, and yellow-faced tabs shall be installed on the left-hand side of one-way, or median divided roadways.

All guardrail delineation shall be installed in accordance with the manufacturer's recommendations and as specified herein.

415.3.3 Roadway Guardrail: Wood posts shall either be driven, or placed in manually or mechanically dug holes; however, driven posts will not be permitted at locations where damage to the curb, gutter, sidewalk, buried items, shoulders or pavement might occur. The Engineer will be the sole judge as to whether driving of posts will be allowed. Driving of posts shall be accomplished in a manner that will prevent battering, burring, or distortion of the post. Any post which is damaged to the extent it is unfit for use in the finished work, as determined by the Engineer, shall be removed and replaced at no additional cost to the Agency.

The posts shall be firmly placed in the ground. The space around posts shall be backfilled with selected earth, free of rock, placed in layers approximately 4 inches thick and each layer shall be moistened and thoroughly compacted to the density of the surrounding material.

Where pavement is disturbed in the construction of guardrail, the damaged surfacing shall be repaired as approved by the Engineer. Where a culvert or other obstacle is at an elevation, which would interfere with full depth post placement, guardrail installation shall comply with requirements of Section 415.3.4 Bolted Guardrail Anchors or Section 415.3.5 Nested Guardrail.

Wood blocks shall be toe nailed to the wood post with one 16 penny galvanized nail on each side of the top of the block. Wood blocks shall be set so that the top of the block is no more than ½" above or below the top of the post, unless otherwise shown on the project plans.

Rail elements shall be spliced at 25 foot intervals or less. Rail elements shall be spliced at posts unless otherwise shown on the project plans. The rail element shall have full bearing at joints. When the radius of curvature is 150 feet or less, the rail element~~s~~ shall be ~~shaped in the~~ shop curved.

~~Posts shall be placed at equal intervals, as shown on the plans, except that the end posts may be spaced closer to adjacent posts if directed by the Engineer.~~

The Contractor shall dispose of ~~S~~surplus excavated material remaining after the guard railing has been constructed ~~shall be disposed of~~.

~~Railing parts furnished under these specifications shall be interchangeable with similar parts regardless of source.~~

415.3.4 Bolted Guardrail Anchors: Where the elevation of the top surface of a box culvert or other similar installation prevents the placement of a post of the specified length, the posts shall be shortened and anchored in accordance with *ADOT Roadway Standard Drawing C-10.07* at the locations shown on the plans.

415.3.5 Nested Guardrail: This work shall consist of furnishing and constructing nested guardrail, Type 1, 2, or 3, as shown in *ADOT Roadway Standard Drawing C-10.06* including all materials, in accordance with the requirements of the project plans.

Nested guardrail consists of additional steel W-beam sections attached as an appurtenance to guardrail.

415.3.6 Guardrail to Structure Transitions: Guardrail transitions shall be constructed in accordance with the details shown on the project plans, at the locations shown on the plans. *Thrie beam to concrete half barrier guardrail transitions shall be in accordance with ADOT Roadway Standard Drawing C-10.30.*

415.4 MEASUREMENT:

The limits of measurement for roadway guardrail shall be as detailed in *Maricopa County Department of Transportation Standard Detail 3016* and as shown on the project plans. Guardrail, of the type shown on the project plans, will be measured by the linear foot along the face of the rail element from center to center of end posts, exclusive of guardrail terminals, guardrail
end terminal assemblies, and guardrail transitions and anchor assemblies.

Delineation is considered a part of installation of guardrail and hence will not be measured as a separate item.

The accepted quantities of bolted guardrail anchors, will be measured by the unit each, complete in place, including steel brackets, hardware, excavation, backfill, removing and replacing surfacing, cutting and fitting steel beam posts or timber posts, drilling anchor bolt holes in steel posts, timber posts, and box culverts, and disposal of surplus materials.

Nested guardrail, Type 1, 2, or 3, installed as an appurtenance to new guardrail, shall be measured by the linear foot of additional steel W-beam, installed using guardrail hardware, complete in place and accepted, as shown on the plans.

Guardrail transitions will be measured by the unit each, complete and accepted as shown on the project plans.

415.5 PAYMENT:

Payment for accepted quantities of each type of guardrail will be made at the contract unit price. Payment shall be full compensation for furnishing materials and installing guardrails, complete in place including excavation, backfill, and disposal of surplus material.

Payment for Bolted Guardrail Anchors will be at the contract unit price, and shall be full compensation for the work, complete in place, including steel brackets, hardware, excavation, backfill, removing and replacing surfacing, cutting and fitting steel beam posts or timber posts, drilling anchor bolt holes in steel posts, timber posts, and box culverts, and disposal of surplus materials.

Payment for Additional Steel W-beam will be at the contract unit price.

Payment for guardrail transitions will be at the contract unit price.

~~**415.3 PAINTING:**~~

~~All metal surfaces of the guard rails shall have a zinc chromate prime coat and two coats of white enamel. The exposed portions of the wood posts shall have a wood primer and two coats of finish paint. Materials and application shall be as specified in Sections 790 and 530. Colors shall be as directed by the Engineer.~~

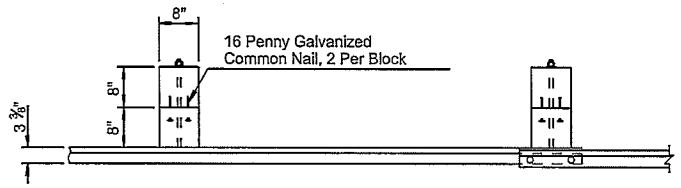

PLAN
G4 (1W) SYSTEM

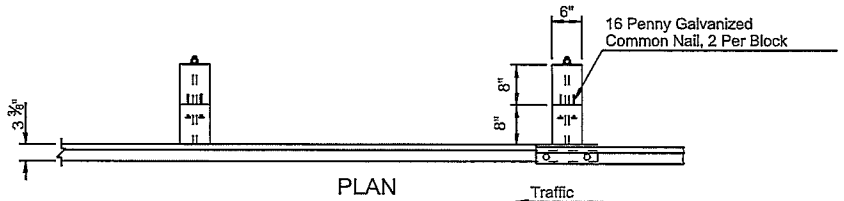

PLAN
G4 (2W) SYSTEM

GENERAL NOTES

● - Indicates ARTBA designation

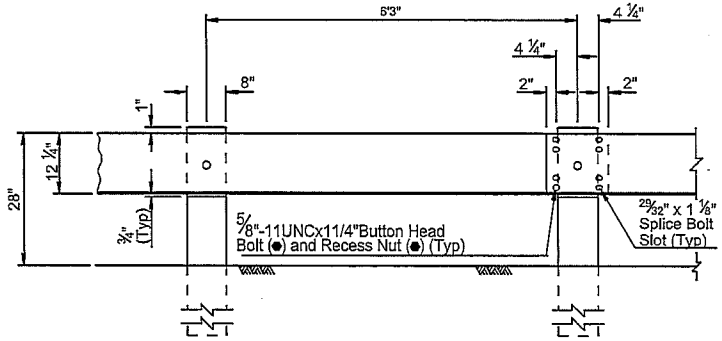

ELEVATION

G4 (1W) SYSTEM

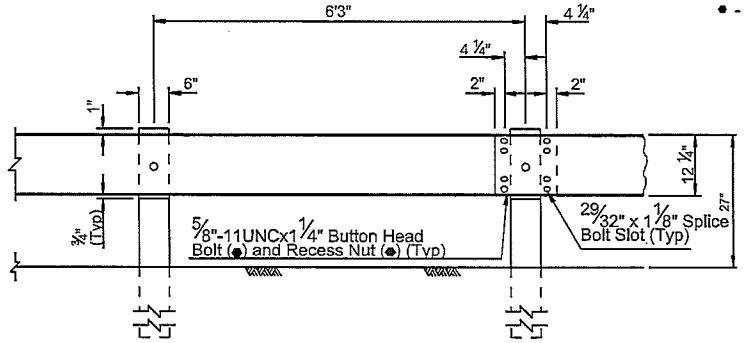

ELEVATION

G4 (2W) SYSTEM

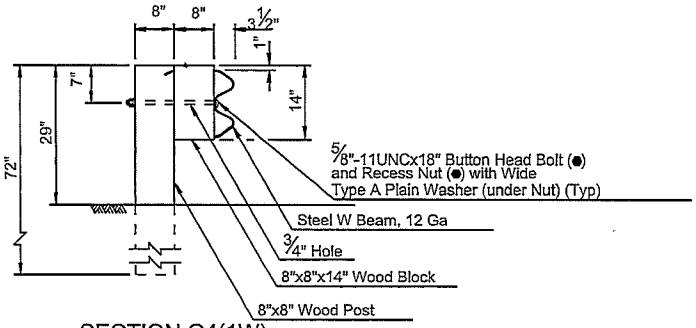

SECTION G4(1W)

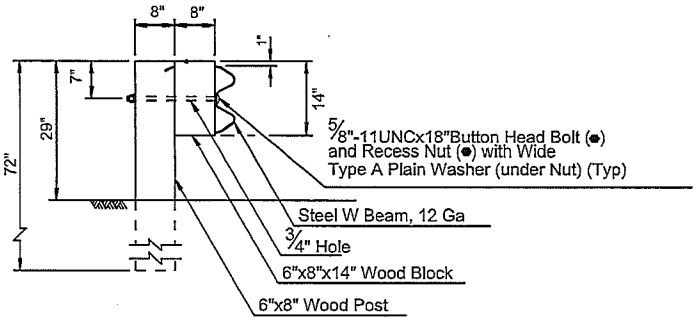

SECTION G4(2W)

MARICOPA COUNTY DEPARTMENT OF TRANSPORTATION STANDARD DETAIL	W BEAM GUARD RAIL G4(1W) AND G4 (2W) BLOCKED OUT TIMBER POST	DATE: 11/01/2011	DETAIL NO. 3001

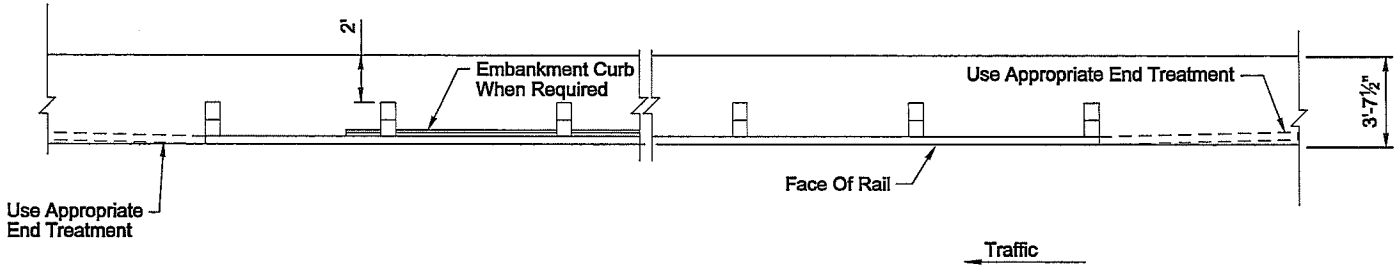

PLAN

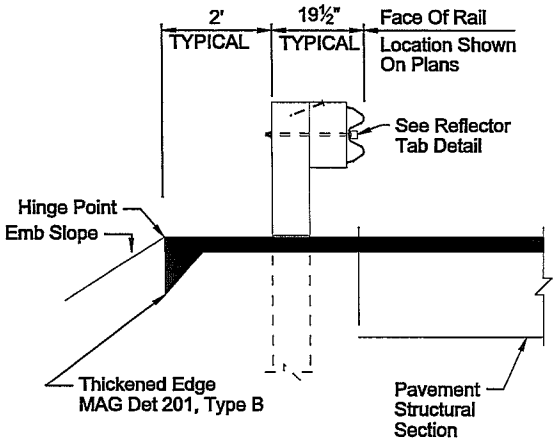

Without Curb

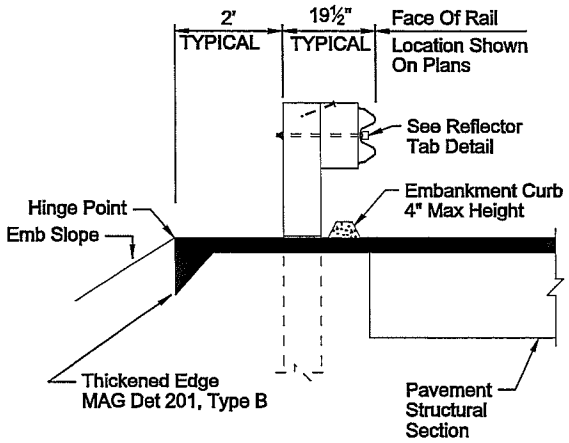

With Curb

SECTION

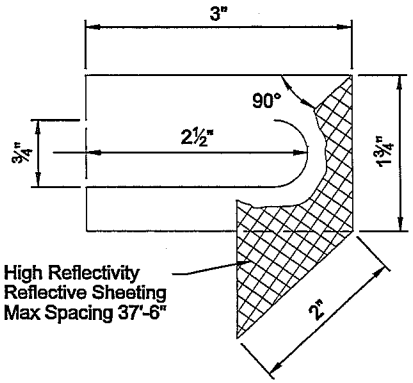

REFLECTOR TAB DETAIL

GENERAL NOTES

1. All Embankment Curb Shall Be Protected By Guard Rail.
2. Guard Rail Shall Extend Beyond The Limits Of Embankment Curb.
3. See Std. 3016 For Measurement Limits.
4. Asphalt Pavement Behind Face Of Rail Shall Be ≥ 2 Inches in Thickness

MARICOPA COUNTY DEPARTMENT OF TRANSPORTATION STANDARD DETAIL	GUARDRAIL INSTALLATION	DATE: 1/1/2011	DETAIL NO. 3002

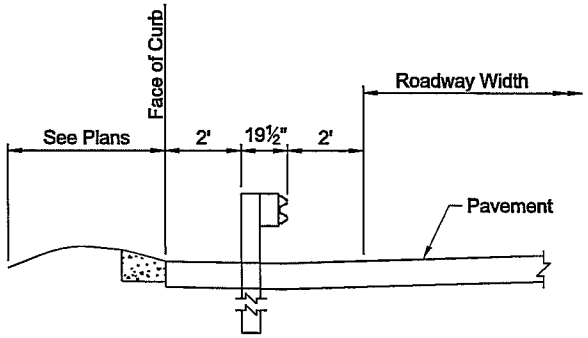

SECTION B-B

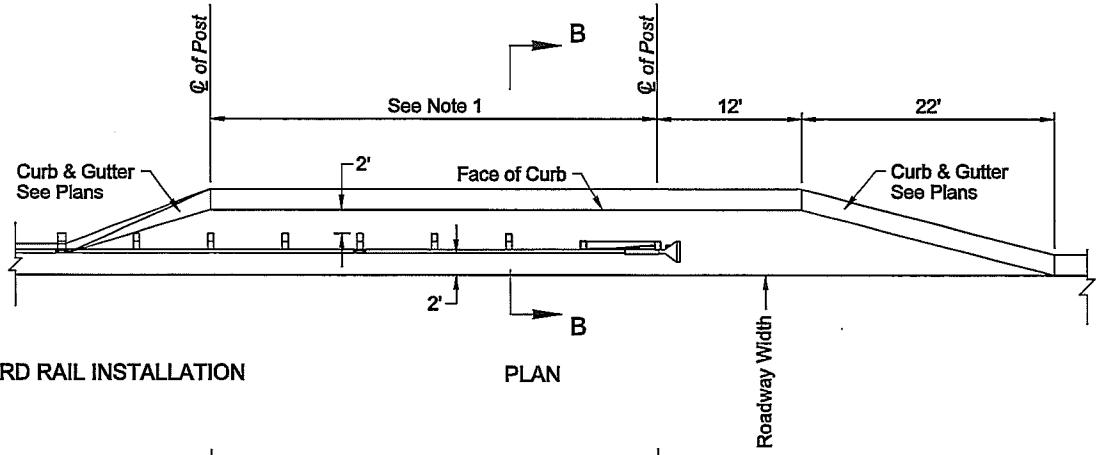

TYPE B GUARD RAIL INSTALLATION

PLAN

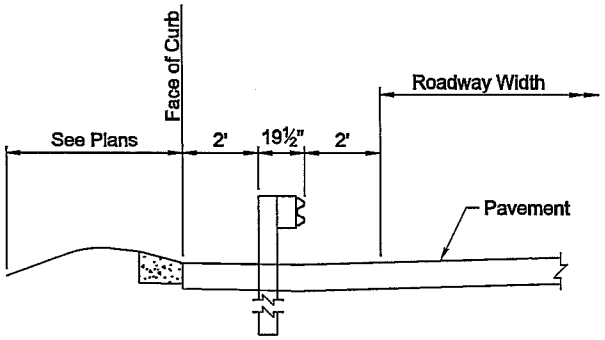

SECTION A-A

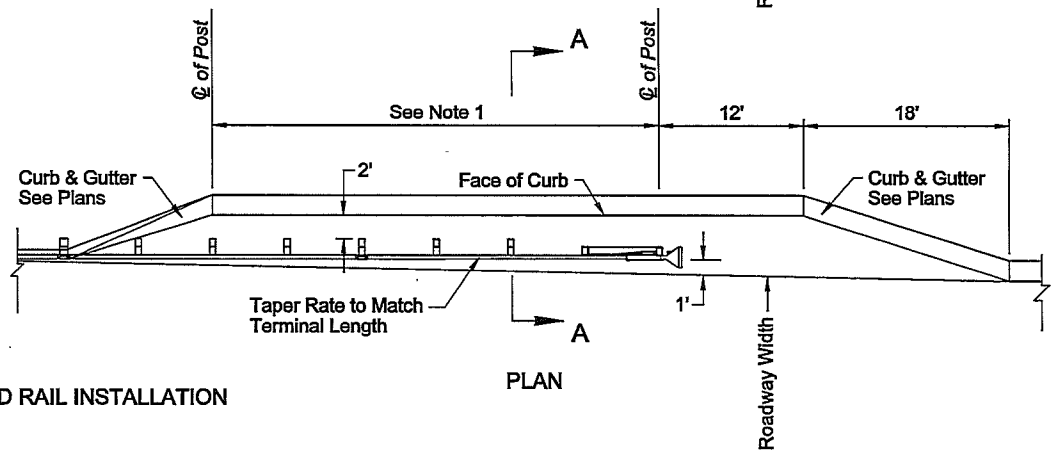

TYPE A GUARD RAIL INSTALLATION

PLAN

NOTES:

1. Distance = 37.5' for 50.0' Terminal Length
   Distance = 25.0' for 37.5' Terminal Length
   Distance = 12.5' for 25.0' Terminal Length

MARICOPA COUNTY DEPARTMENT OF TRANSPORTATION STANDARD DETAIL	END TERMINAL LAYOUT WITH CURB & GUTTER	DATE: 02/10	DETAIL NO. 3005

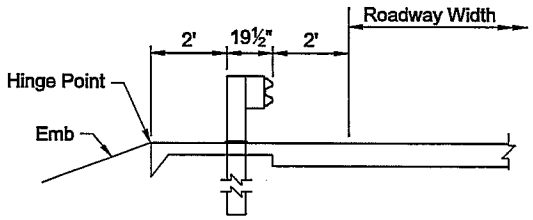

SECTION B-B

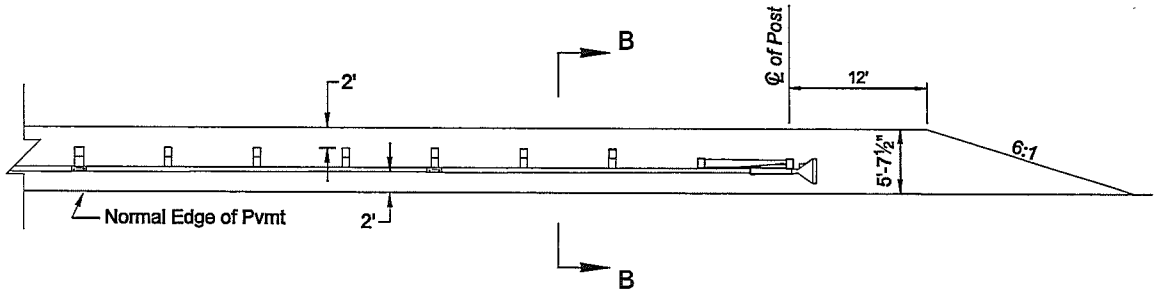

TYPE B GUARDRAIL INSTALLATION

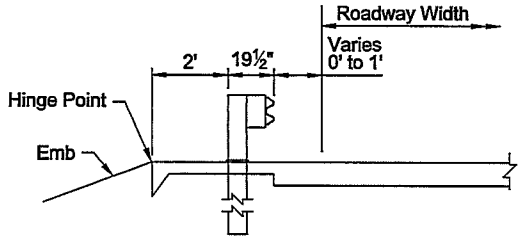

SECTION A-A

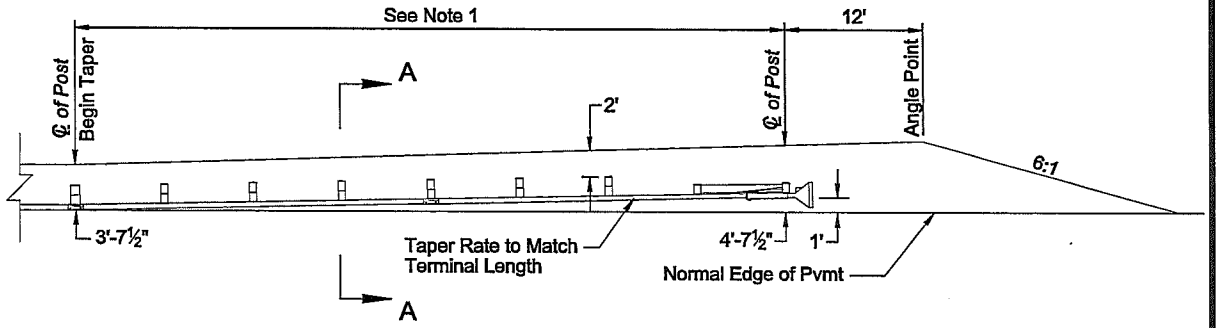

TYPE A GUARDRAIL INSTALLATION

NOTES:

1. Distance = 50' for 50' Terminal Length
   Distance = 37.5' for 37.5' Terminal Length
   Distance = 25' for 25' Terminal Length

MARICOPA COUNTY DEPARTMENT OF TRANSPORTATION STANDARD DETAIL	END TERMINAL LAYOUT WITHOUT CURB AND GUTTER	DATE: 02/10	DETAIL NO. 3006

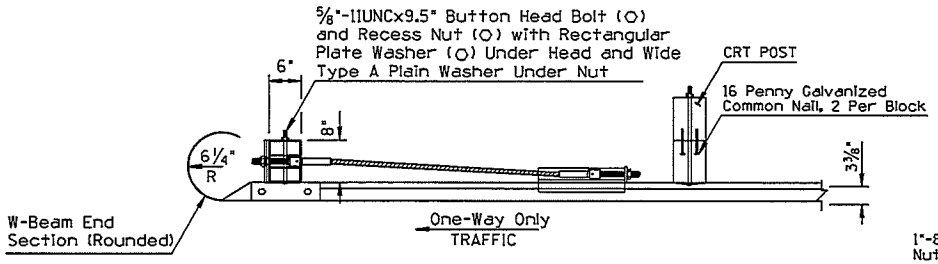

PLAN

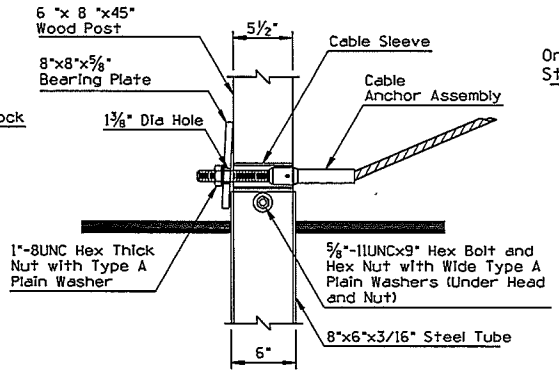

FRONT VIEW

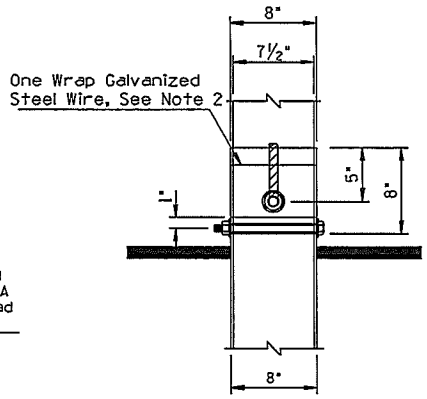

SIDE VIEW

BEARING PLATE DETAIL

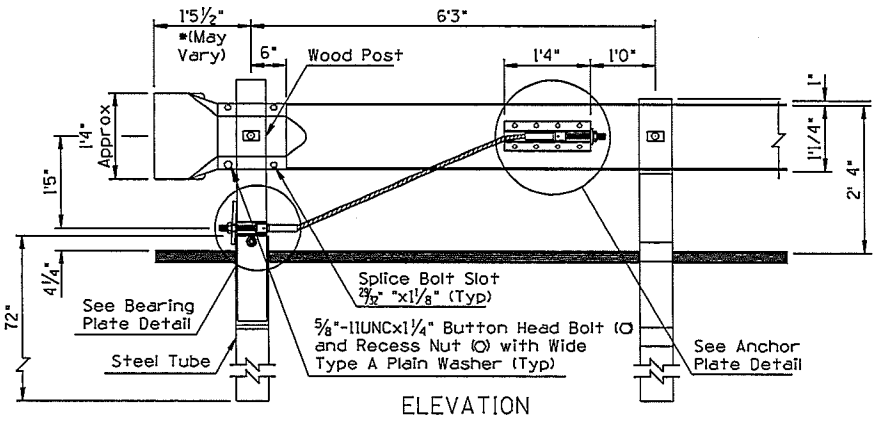

ELEVATION

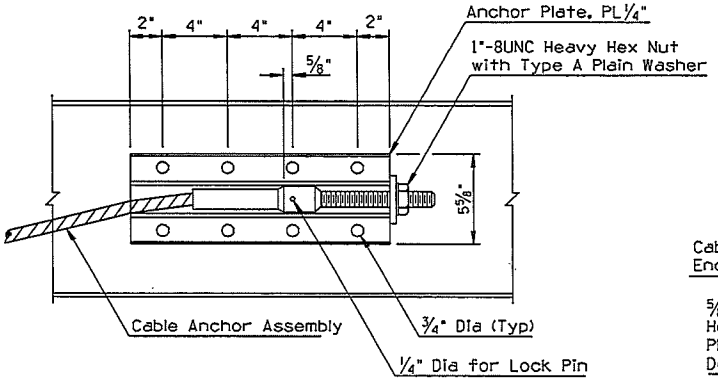

FRONT VIEW

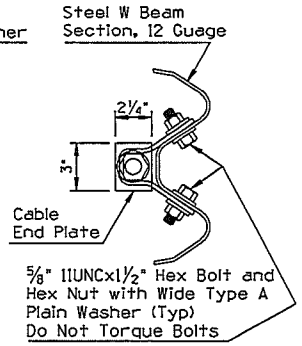

SIDE VIEW

ANCHOR PLATE DETAIL

GENERAL NOTES

1. The cable assembly shall be tightened to remove slack.
2. To ensure that the bearing plate remains in position, one wrap of 14 gauge galvanized steelwire shall be wrapped around the terminalpost near the top of the plate.
3. See W-Beam End Section (Rounded), ARTBA Std. RE-6-79, for dimension variables.

* See Std. 3016 for measurement limits.

O Indicates ARTBA designation

MARICOPA COUNTY DEPARTMENT OF TRANSPORTATION STANDARD DETAIL	DEPARTURE END TERMINAL	DATE: 11/01/11	DETAIL NO. 3007

GENERAL NOTES

1. ● - Indicates ARTBA designation.

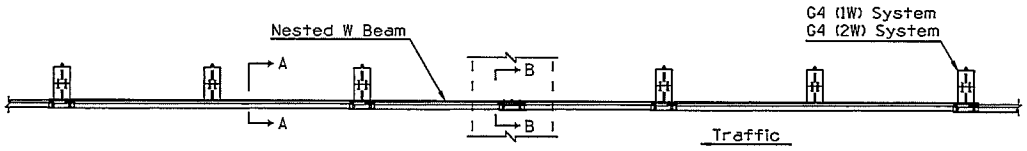

PLAN

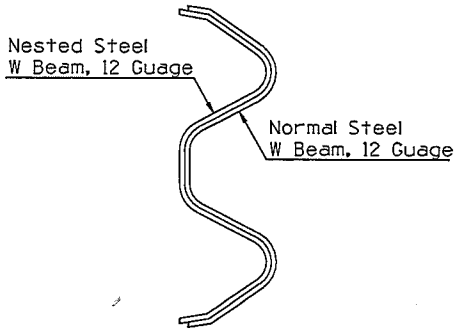

SECTION A-A

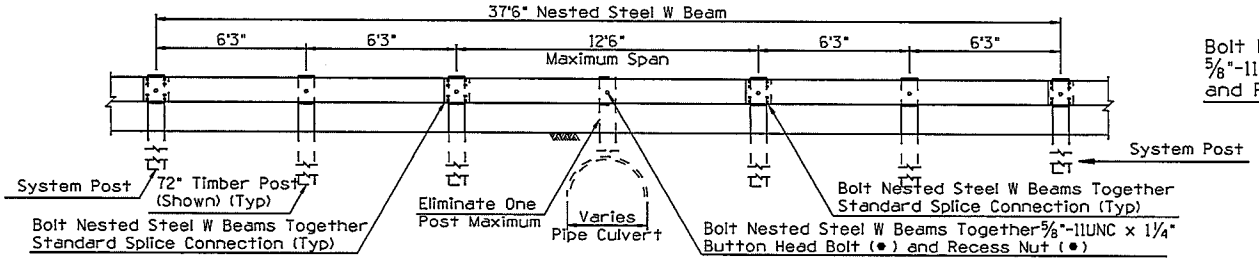

NESTED STEEL W BEAM - TYPE 2 - LONG SPAN
(Splice Connection Outside Span) Length = 37'6"

ELEVATION

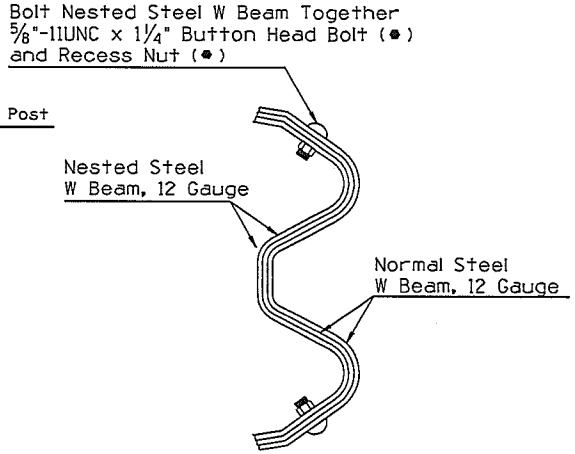

SECTION B-B

MARICOPA COUNTY DEPARTMENT OF TRANSPORTATION **STANDARD DETAIL**	**NESTED GUARDRAIL TYPE 2**	**DATE:** 11/14/11	**DETAIL NO.** **3008–2**

GENERAL NOTES

1. ● - Indicates ARTBA designation.

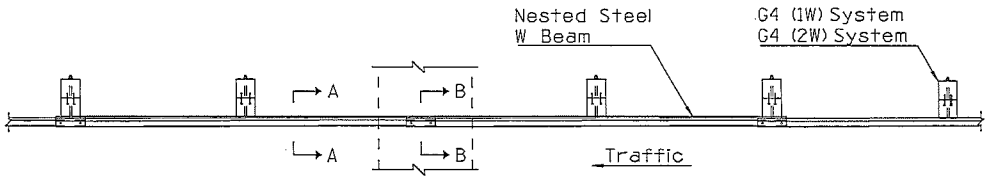

PLAN

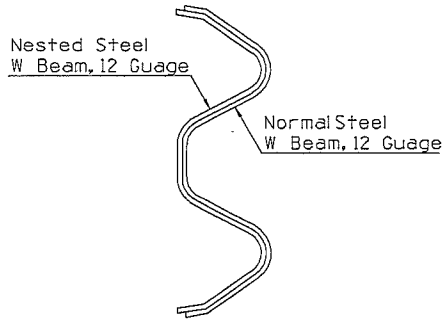

SECTION A-A

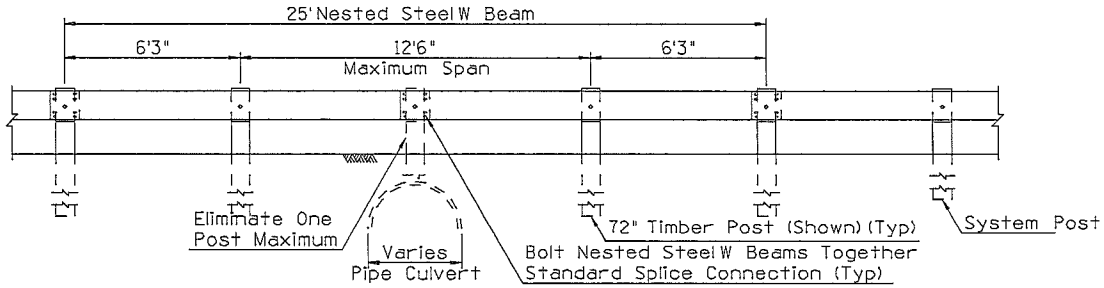

NESTED STEEL W BEAM - TYPE 1 - SHORT SPAN
(Splice Connection Inside Span) Length = 25'

ELEVATION

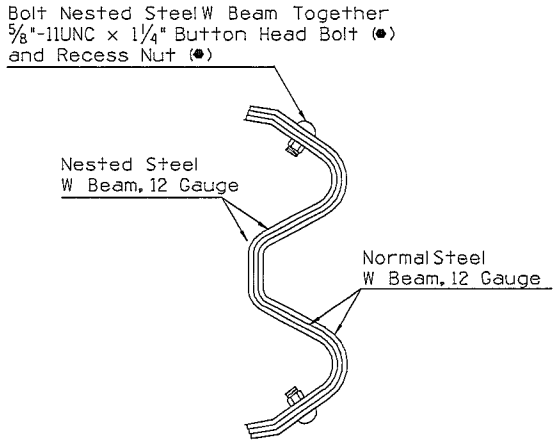

SECTION B-B

Base Drawing Courtsey of ADOT 2/25/00

MARICOPA COUNTY DEPARTMENT OF TRANSPORTATION STANDARD DETAIL	NESTED GUARDRAIL TYPE 1	DATE: 5/02/01	DETAIL NO. 3008–1

GENERAL NOTES

1. ● - Indicates ARTBA designation.

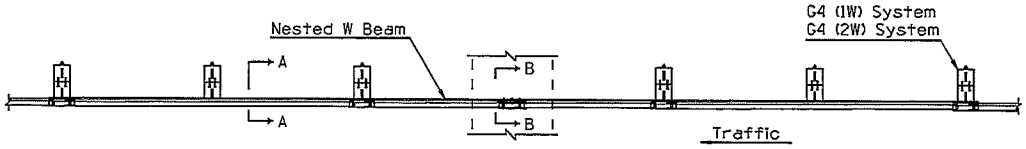

PLAN

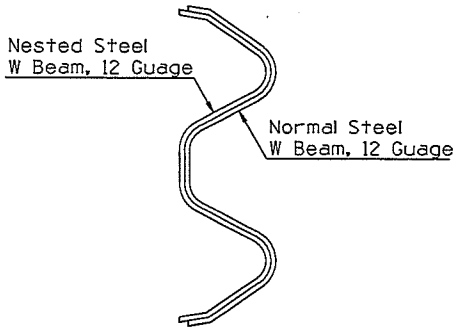

SECTION A-A

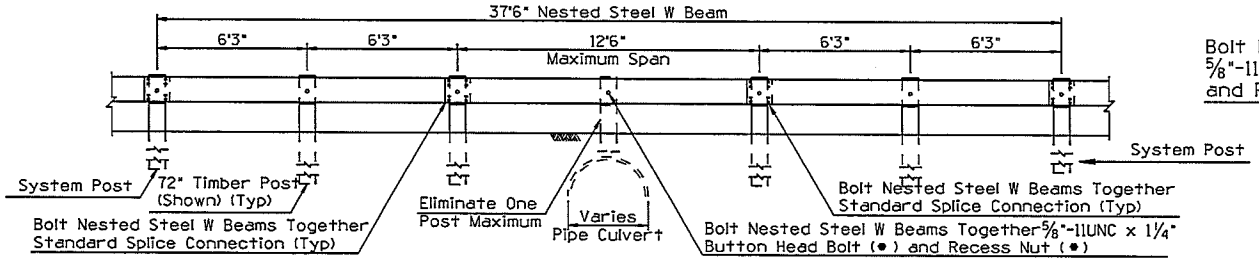

NESTED STEEL W BEAM - TYPE 2 - LONG SPAN
(Splice Connection Outside Span) Length = 37'6"

ELEVATION

Bolt Nested Steel W Beam Together
5/8"-11UNC x 1 1/4" Button Head Bolt (●)
and Recess Nut (●)

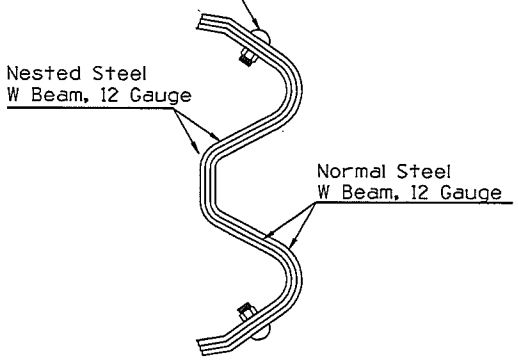

SECTION B-B

MARICOPA COUNTY DEPARTMENT OF TRANSPORTATION STANDARD DETAIL	NESTED GUARDRAIL TYPE 2	DATE: 11/14/11	DETAIL NO. 3008–2

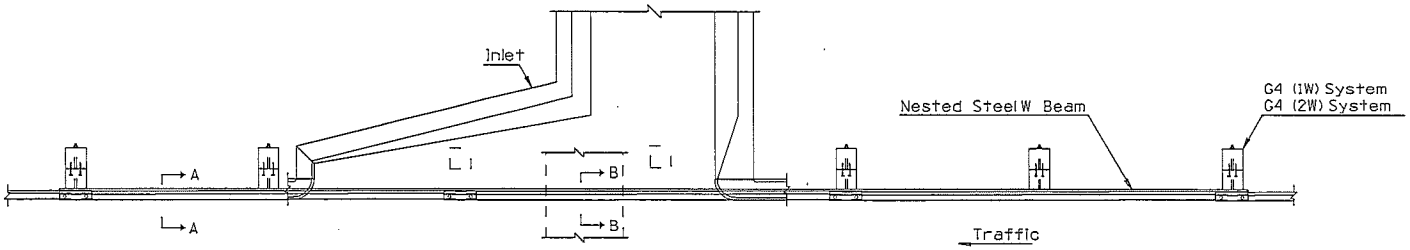

PLAN

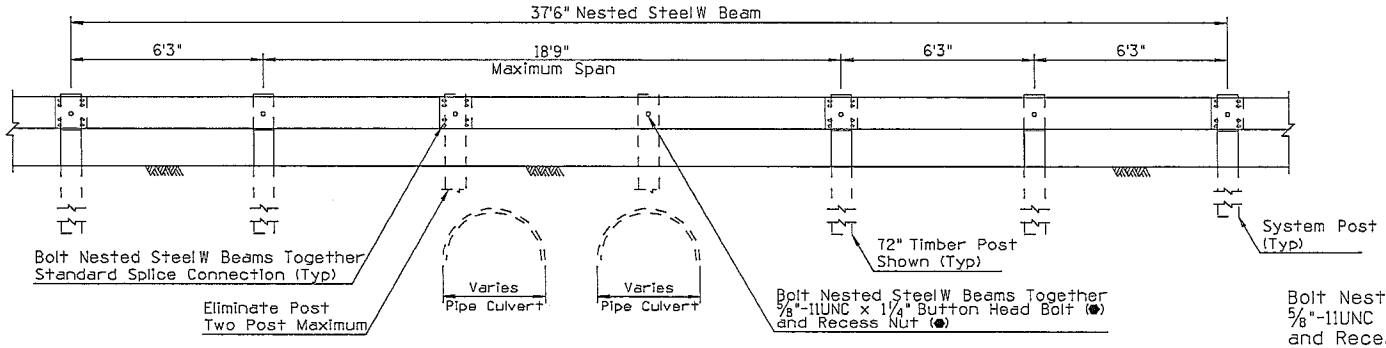

NESTED STEEL W BEAM - TYPE 3 - LONG SPAN
Length = 37'6"

ELEVATION

GENERAL NOTES

1. Use Type 3 Nested Steel W Beam to span downdrain or spillway inlets as shown in the plan view.
2. Use Type 3 to span multiple obstructionsas shown in the elevation view.
3. See Std 3008-1 for additional information and dimensions

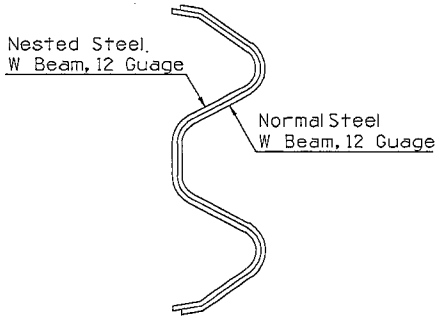

SECTION A-A

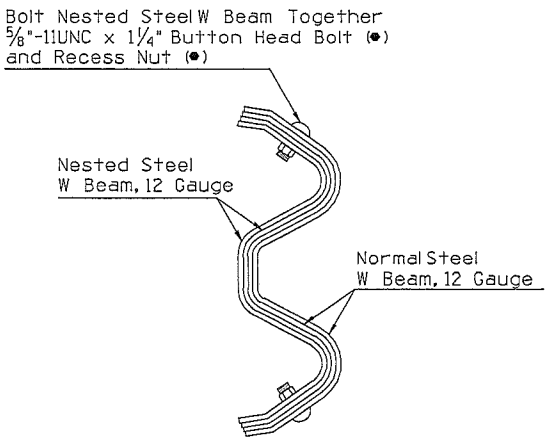

SECTION B-B

Base Drawing Courtsey of ADOT 2/25/00

MARICOPA COUNTY DEPARTMENT OF TRANSPORTATION STANDARD DETAIL	NESTED GUARDRAIL TYPE 3	DATE: 5/01/01	DETAIL NO. 3008–3

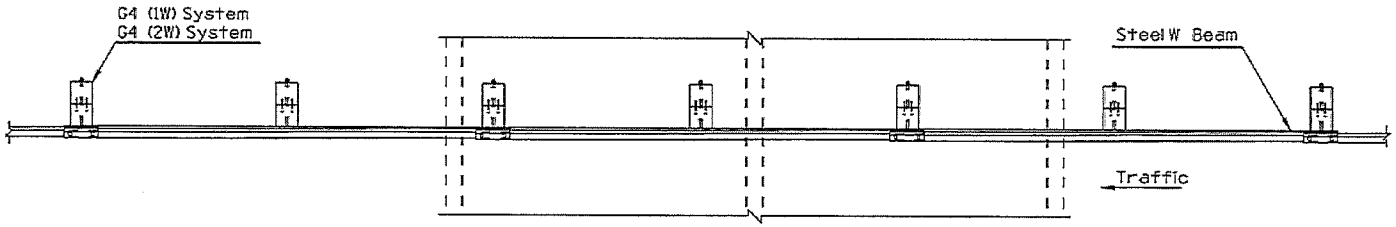

PLAN

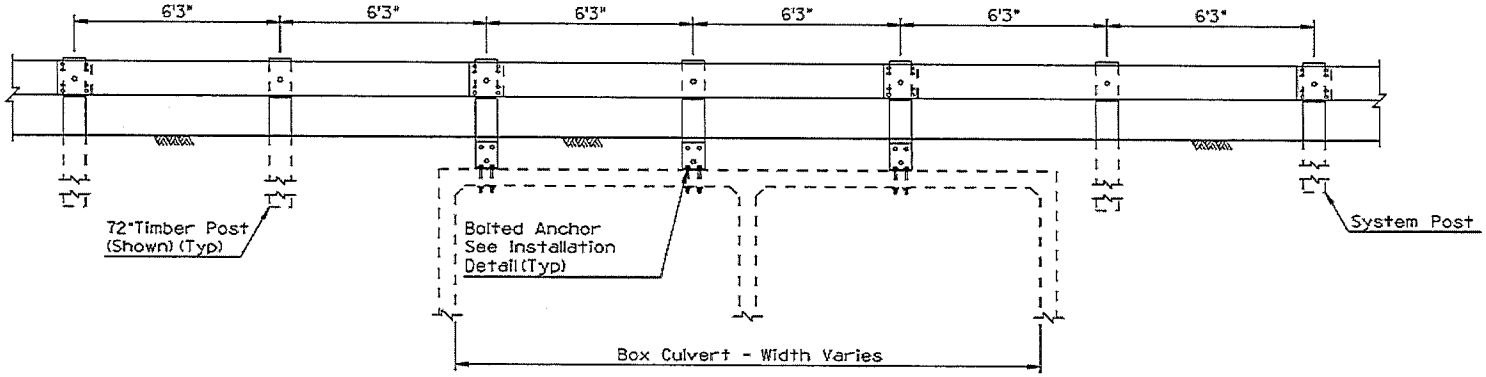

ELEVATION

BOLTED ANCHOR
BOX CULVERT INSTALLATION

MARICOPA COUNTY DEPARTMENT OF TRANSPORTATION STANDARD DETAIL	BOLTED GUARDRAIL ANCHORS	DATE: 11/19/09	DETAIL NO. 3010–1

GENERAL NOTES

1. Drill through top of box culvert with rotary drill.
2. Bracket may be made of one piece hot bent, or two pieces welded together.
3. Short timber posts anchored to box culvert roof shall be 8" x 8" only.

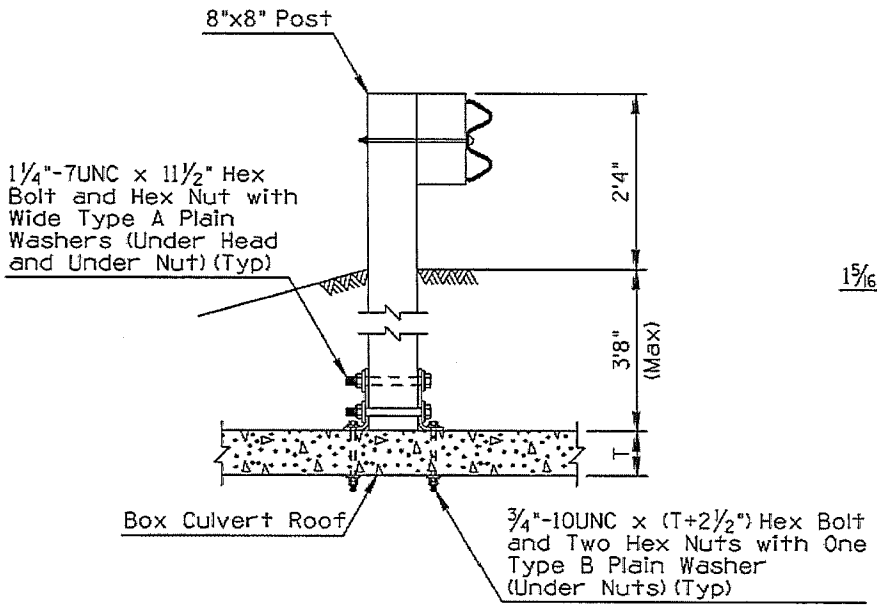

INSTALLATION DETAIL

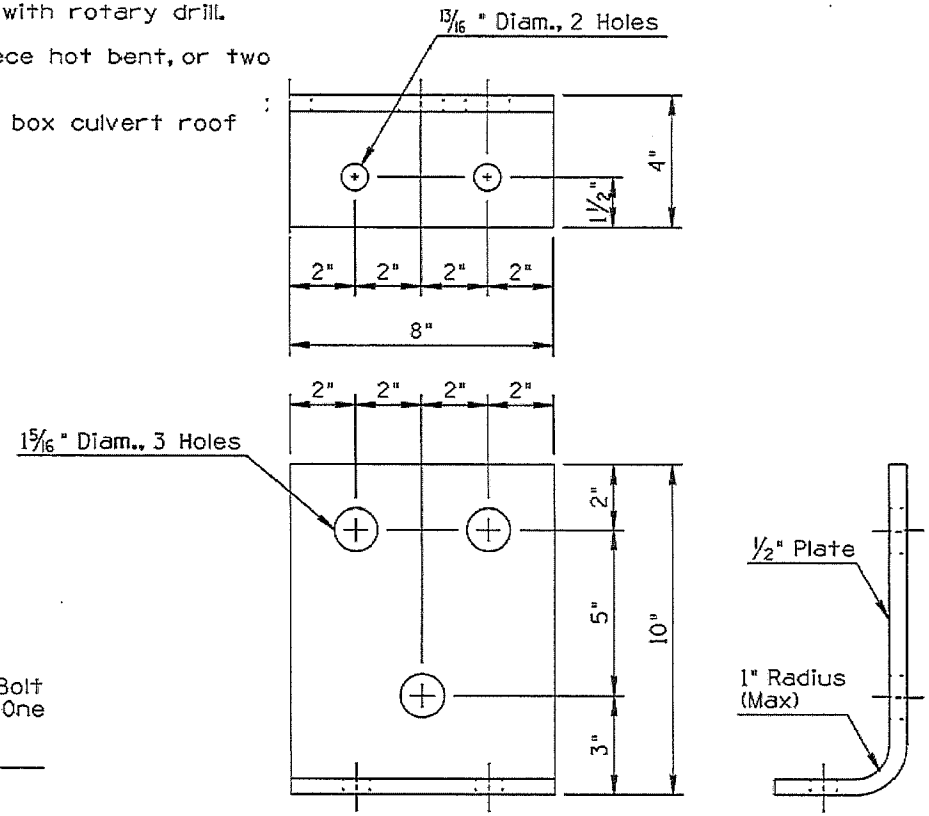

BRACKET DETAIL

BOLTED ANCHOR
TIMBER POST INSTALLATION DETAIL

MARICOPA COUNTY DEPARTMENT OF TRANSPORTATION **STANDARD DETAIL**	**BOLTED GUARDRAIL ANCHORS**	DATE: 11/19/09	DETAIL NO. **3010–2**

GENERAL NOTES

● - Indicate ARTBA designation.

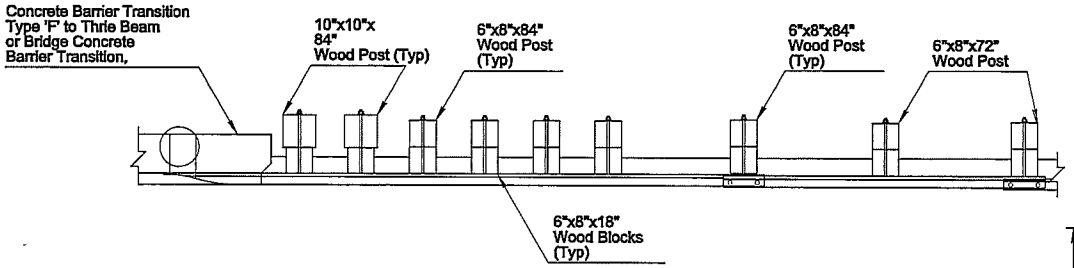

PLAN

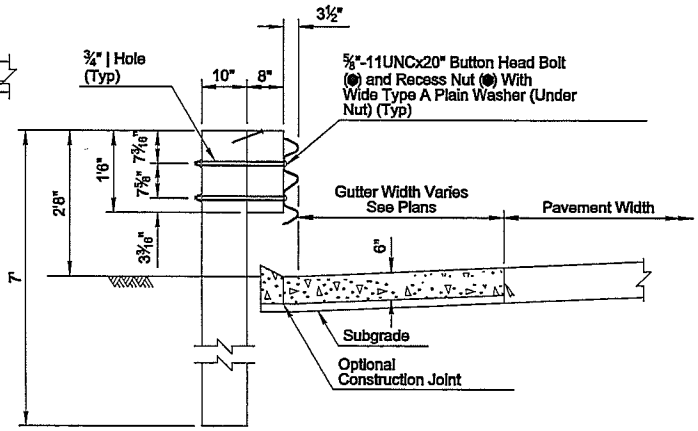

SECTION A-A

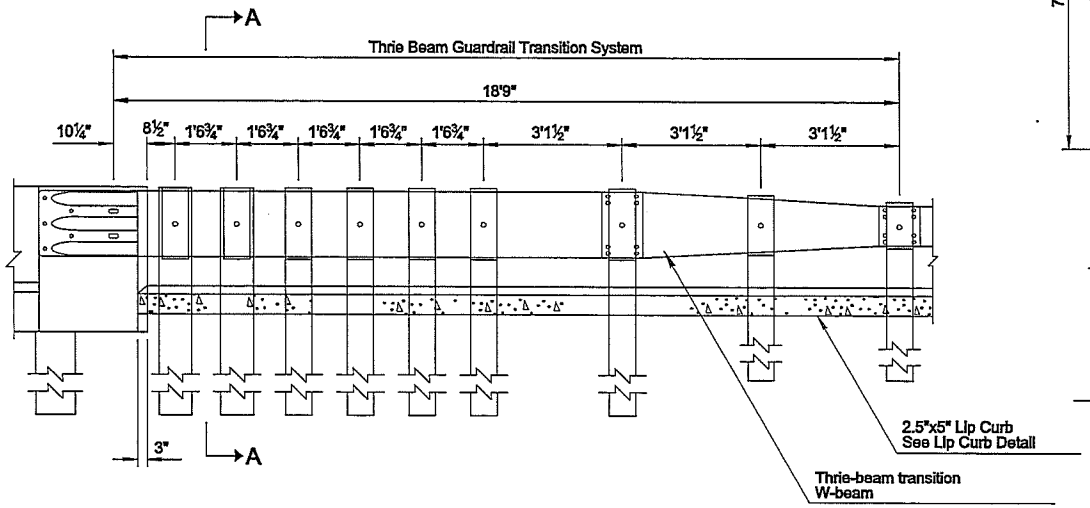

ELEVATION

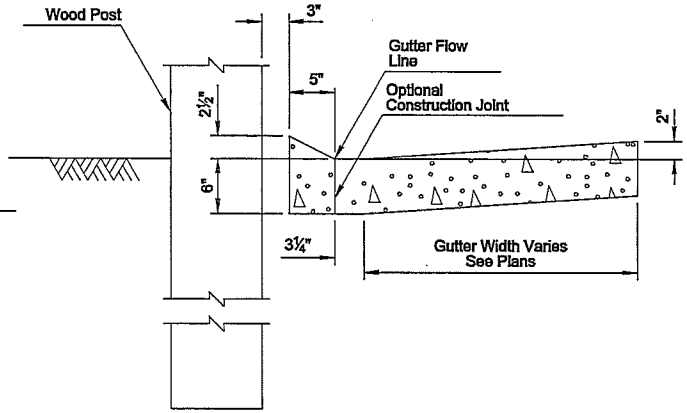

LIP CURB DETAIL

MARICOPA COUNTY DEPARTMENT OF TRANSPORTATION STANDARD DETAIL	THRIE BEAM GUARDRAIL TRANSITION	DATE: 06/01	DETAIL NO. 3012-1

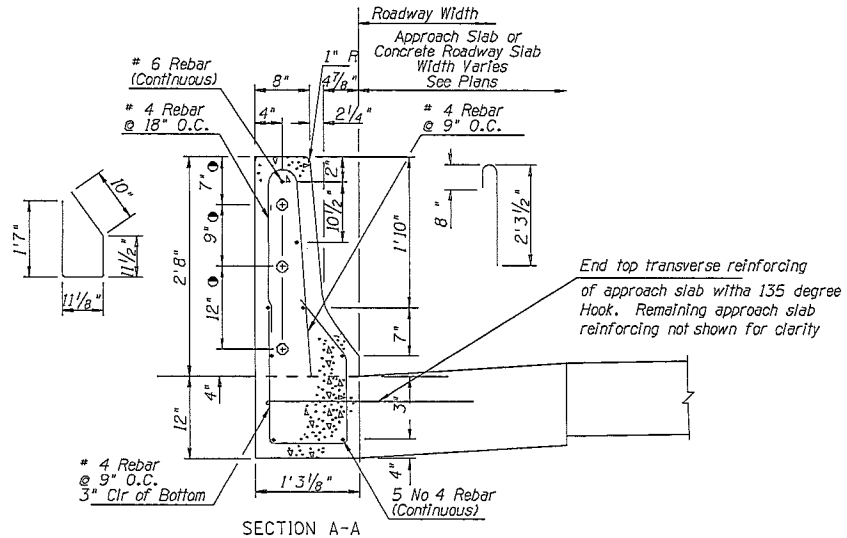

SECTION A-A

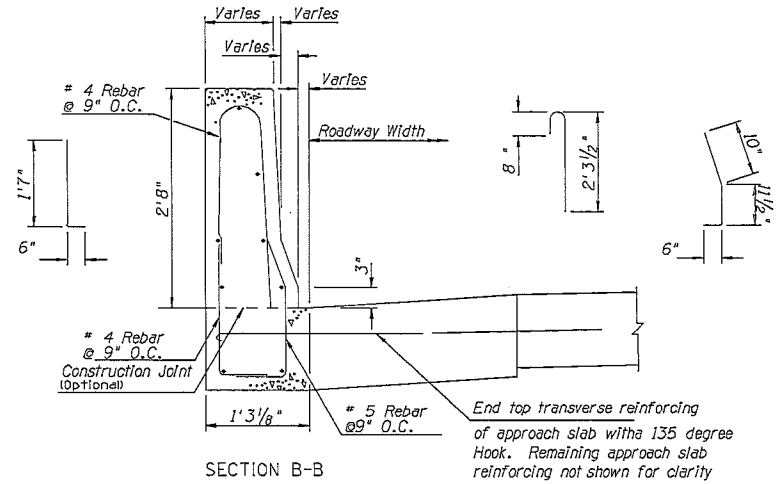

SECTION B-B

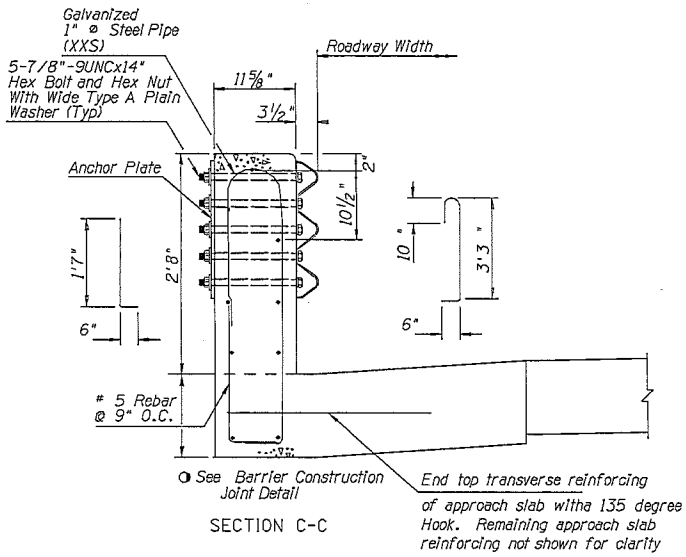

SECTION C-C

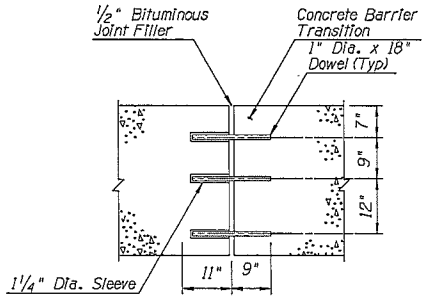

Joint Assembly

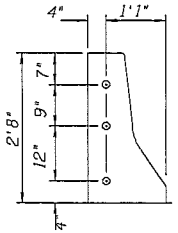

Dowel Locations

BARRIER CONSTRUCTION JOINT DETAIL

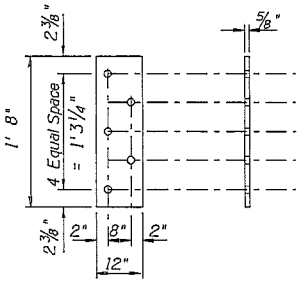

Anchor Plate

Base Drawing Courtsey of ADOT 2/25/00

MARICOPA COUNTY DEPARTMENT OF TRANSPORTATION STANDARD DETAIL	BARRIER DETAIL	DATE: 8/06/01	DETAIL NO. 3012-3