MARICOPA COUNTY
Department of Transportation

MEMORANDUM

Date: January 30, 2013

To: MAG Specifications and Details Committee

From: Robert Herz, MCDOT Representative

Subject: Revision for Detail 120 SURVEY MARKER **Case 13-04**

PURPOSE: Revise detail to prevent installation of survey markers that do not comply with requirements of ARS 33-103.

REVISIONS:

- Replace the detail for Type A monument with Type E.
- Replace the detail for Type B monument with Type D.

EXPLANATION:

Streets have been traditionally laid out on a grid pattern matching section lines. Streets plans in compliance with notes 1 and 2 on Detail 120-1 require installation of Types A and B street monuments. This results in installation of section corners and section 1/4 corner monuments that do not comply with the survey monument requirements of ARS 33-103. Detail 120-2 survey monument types D and E are compliant with requirements of ARS 33-103. To eliminate confusion and to assist compliance with requirements of the Arizona revised statures it is proposed to have the street monuments be revised to be compliant with ARS 33-103.

Proposed revisions to Detail 120-1 and 120-2 will be submitted by the next committee meeting. Changes to be made are the replacement of the monument details for survey markers types A and B and the consolidation and adjustment of the notes on details 120-1 and 120-2.

Provided for committee review are the following documents:

- Letter from John Rose, MCDOT Survey Chief to the Board of Directors, Arizona Professional Land Surveyors identifying monument deficiencies.
- Response letter from Arizona Professional Land Surveyors Association that Type A and Type B monuments should be removed and that Type D and Type E monuments shown on Detail 120-2 are in compliance with statute requirements.
- ARS 33-103.
- Arizona Boundary Survey Minimum Standards.

2901 West Durango Street Phoenix, Arizona 85009 Phone: 602-506-4760 Fax: 602-506-5969

Maricopa County
Department of Transportation

2901 W. Durango Street
Phoenix, Arizona 85009
Phone: (602) 506-8600
Fax: (602) 506-4858

January 2, 2013

Board of Directors, Arizona Professional Land Surveyors

I am writing this letter on behalf of the Maricopa County Department of Transportation (MCDOT) concerning a proposal to remove one of the two monument standards within the Maricopa Association of Governments (MAG) Standard Details. These standards are followed by not only MCDOT but also the towns, cities and Indian communities within the county. In addition there are many cities and counties throughout the state that utilize these details. The two standards for Survey Markers (MAG terminology for monument) are MAG Standard Detail 120-1 and 120-2. Both are attached to this letter. I am proposing eliminating the 120-1 Detail for the following reasons:

1. The monument is brass with a 3" stem. I believe the original intent of these monuments were for bench marks on headwalls, for which they work well. They do not meet the Arizona Boundary Minimum Standards because are not magnetically detectable or the minimum length as the monument stands alone.
2. The Standard Detail will meet the Minimum Standard if a standard wrought iron washer is placed underneath or a rebar is wired to the monument. We have found that often contractors leave off both the washer and the rebar in an attempt to save time and money. We had a project in Sun City last year on which the contractor failed to place a washer or rebar and had to dig out and replace 40 monuments. If not magnetically detectable and the monument gets slurried over it is difficult and time consuming to find.
3. MAG Standard Detail 120-1 is divided into three Types, all of which are problematic:

   Type A – This monument is for section or quarter corners and only requires the washer under the cap. This does not meet the Minimum Standards or ARS 33-103 for the minimum length of 2-½ feet. Although the monument has 30" of concrete underneath this is not a stable structure without reinforcement.

   Type B – This monument is for street intersections, PCs, PTs and PIs. This monument has a rebar but it has to be tied to the monument at an awkward angle that results in a non-vertical representation of the monument if the brass cap is removed.

   Type C – This monument is for subdivision boundaries that are outside paved areas or alleys. It does not meet the minimum standards because there is no place for the marking and if used in traffic areas could create a hazard.

The MAG Standard Detail 120-2 satisfies all Minimum Standard and ARS areas by specifying a threaded brass cap directly over the proper length pipe. It cites both the ARS and Minimum Standards. I propose eliminating 120-1 altogether and leaving 120-2. Our MAG representative has asked me to include a letter of support from APLS regarding this issue and I respectfully ask that you support my proposal.

Very Respectfully,

John J. Rose, R.L.S.

MCDOT Survey Chief

NOTES:

1. TYPE 'A' TO BE USED AT INTERSECTIONS OF MAJOR STREETS & COLLECTOR STREETS, AND AT OTHER SPECIAL PONTS IF REQUIRED BY ENGINEER, AS SHOWN ON PLANS.
2. TYPE 'B' TO BE USED AT INTERSECTION OF STREET CENTERLINES (EXCEPT WHERE TYPE 'A' IS SPECIFIED), CORNERS OR CHANGES IN ALIGNMENT OF SUBDIVISION BOUNDARIES (WHEN THEY FALL IN PAVEMENT), P.C.'S AND P.T.'S OF CURVES. WHEN P.I. FALLS IN PAVEMENT, THEN THE P.I. SHALL BE MONUMENTED.
3. TYPE 'C' TO BE USED AT CORNERS OF, AND CHANGE IN ALIGNMENT OF, SUBDIVISION BOUNDARIES WHERE CORNERS OR CHANGE POINTS FALL OUTSIDE OF PAVED AREAS OR IN ALLEYS.
4. LETTERS TO BE APPROX. 1/32" WIDE & 1/32" DEEP.
5. USE STANDARD WROUGHT IRON WASHER 3" O.D. x 11/64" THICK WITH 1-3/8" HOLE
6. CAP TO BE CONSTRUCTED OF RED BRASS OR BRONZE.
7. FRAME & COVER TO INCLUDE CHAIN PER DET. 270. (OPTIONAL PER AGENCY REQUIREMENTS.)

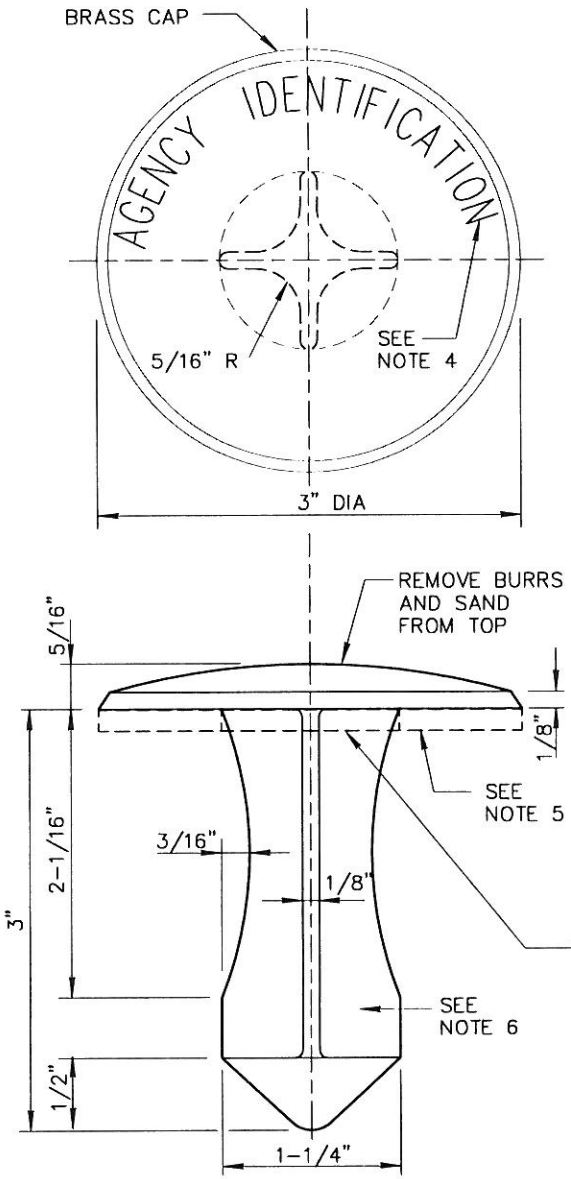

CAP DETAIL

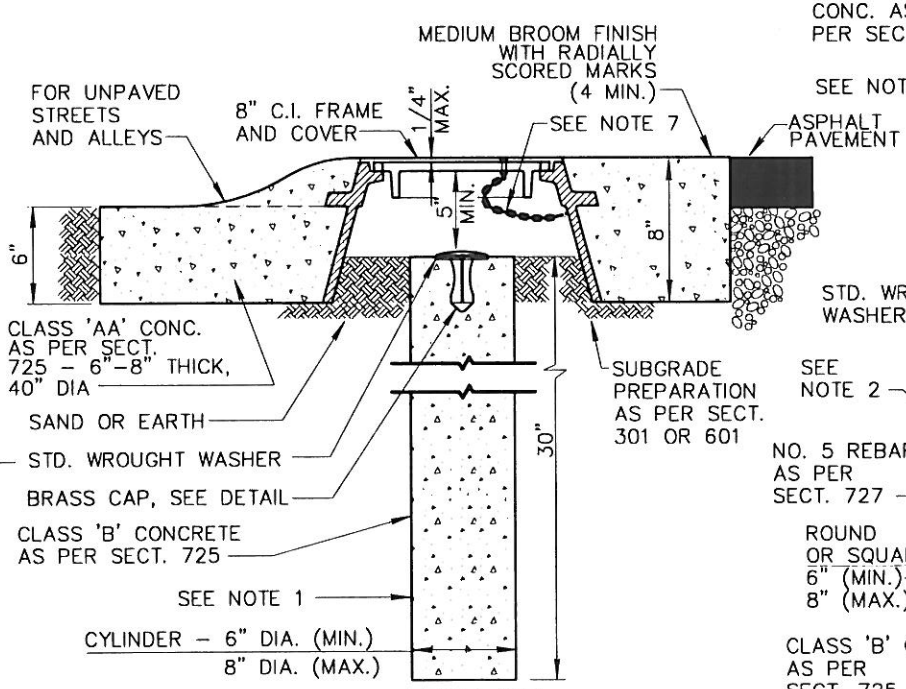

TYPE 'A'

(WITH FRAME PER DETAIL 270)

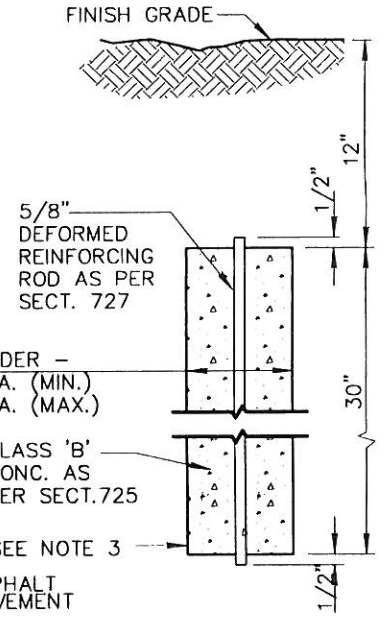

TYPE 'C'

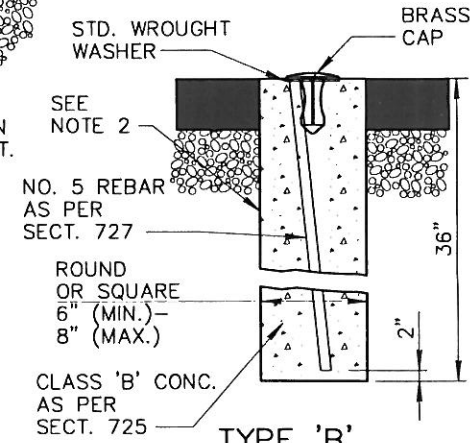

TYPE 'B'

(WITHOUT FRAME)

DETAIL NO.		STANDARD DETAIL		REVISED	DETAIL NO.
120-1	MARICOPA ASSOCIATION of GOVERNMENTS	ENGLISH	SURVEY MARKER	01-01-2001	120-1

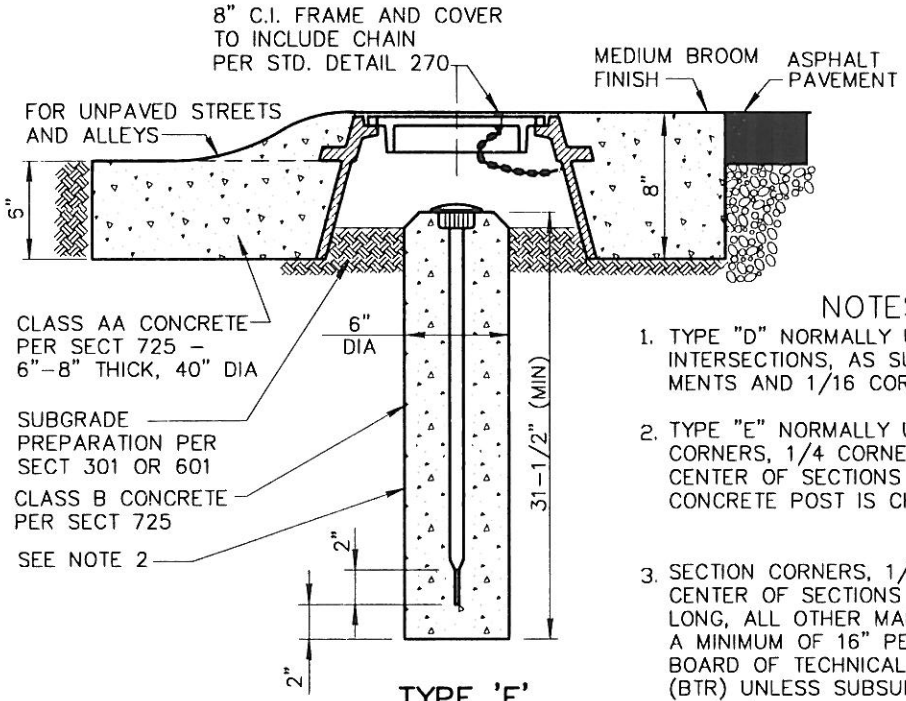

TYPE 'E'
(WITH FRAME)

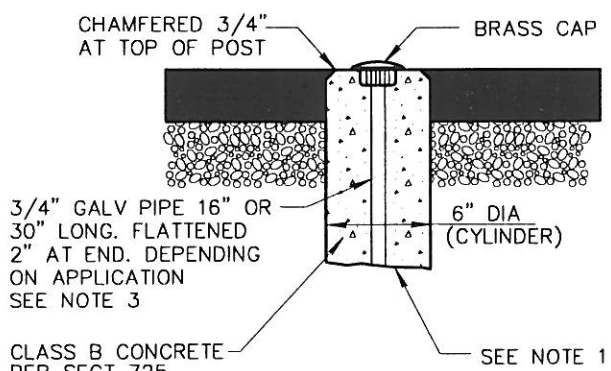

TYPE 'D'
(WITHOUT FRAME)

NOTES:

1. TYPE "D" NORMALLY USED AT STREET INTERSECTIONS, AS SUBDIVISION MONUMENTS AND 1/16 CORNERS.
2. TYPE "E" NORMALLY USED ON SECTION CORNERS, 1/4 CORNERS AND AT THE CENTER OF SECTIONS (PER ARS 33–103). CONCRETE POST IS CHAMFERED 3/4" AT TOP.
3. SECTION CORNERS, 1/4 CORNERS AND CENTER OF SECTIONS SHALL BE 30" LONG, ALL OTHER MARKERS SHALL BE A MINIMUM OF 16" PER THE ARIZONA BOARD OF TECHNICAL REGISTRATION (BTR) UNLESS SUBSURFACE OBSTRUCTIONS LIMIT LENGTH.
4. IN ALL CASES, THE POINT SURVEYED SHALL BE IDENTIFIED BY A PUNCH MARK AND IN ADDITION THE CAP SHALL BE STAMPED WITH THE REGISTERED LAND SURVEYOR (RLS) REGISTRATION NUMBER AND YEAR.
5. WHEN APPLICABLE, STAMP THE APPROPRIATE PUBLIC LAND MARKINGS PER CURRENT MANUAL OF INSTRUCTIONS FOR THE SURVEY OF THE PUBLIC LANDS OF THE UNITED STATES, PREPARED BY THE BUREAU OF LAND MANAGEMENT.
6. IN ALL CASES WHEN MONUMENTS ARE SET A CORNER RECORD OR RESULTS OF SURVEY SHALL BE RECORDED. (PER BTR)

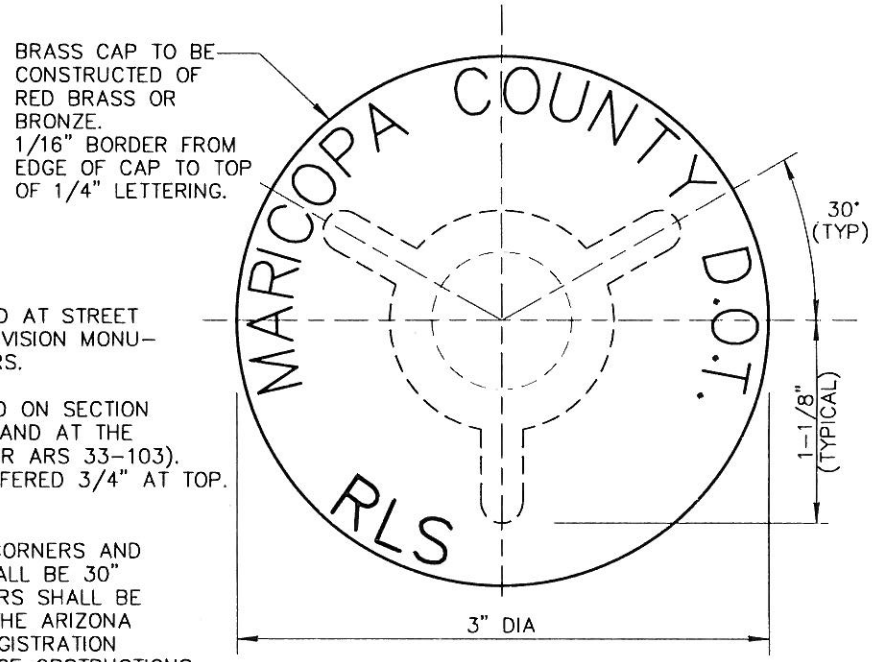

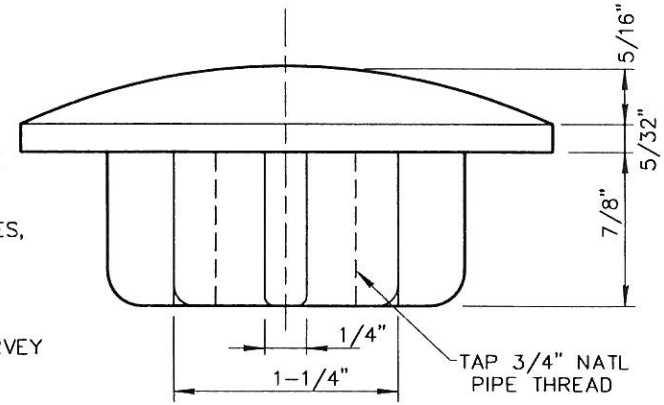

CAP DETAIL

DETAIL NO.		STANDARD DETAIL		REVISED	DETAIL NO.
120-2	MARICOPA ASSOCIATION of GOVERNMENTS	ENGLISH	SURVEY MARKER (FOR UNINCORPORATED AREAS OF COUNTY)	01-01-2007	120-2

Arizona Professional Land Surveyors Association

3346 E. Menadota Dr
Phoenix, AZ 85050
Phone: 602-481-0530
Fax: 602-334-1030
www.azpls.org

2013 Officers

Chair
Dan Muth, RLS

Vice Chair
Stan Dickey, RLS

Secretary
Wayne Griffin, RLS

Treasurer
David Shane, RLS

NSPS Governor
Mike Fondren, RLS

WFPS Delegates
Christopher McDonald, RLS

AGIC Representative
Jason Foose, RLS

Central Chapter
Mike Fondren, RLS

Geospatial Chapter
Tom Homan

Mohave Chapter
Jason Foose, RLS

Northern Chapter
Jim Folkers, RLS

Sahuaro Chapter
Doug Schneider, RLS

Southeastern Chapter
David A. Stratton, RLS

Verde Valley Chapter
James Crowley, RLS

White Mtn. Chapter
Stephan James, RLS

Yavapai Chapter

29 January 2013

Maricopa County
Department of Transportation
2901 W. Durango Street
Phoenix, Arizona 85009
ATTN: John J. Rose R.L.S.

RE: Survey Marker Detail No. 120-2

Dear Mr. Rose;

On behalf of the Arizona Professional Land Surveyors Association (APLS) I would like to thank you for the opportunity to discuss this revision to the survey marker detail. APLS is in complete agreement , the previous detail did not meet the Arizona Boundary Survey Minimum Standards without modification.

At our general membership meeting held 19 January 2013; we discussed and endorsed the submitted Detail No. 120-2. We believe the revision to the detail (Detail No. 120-2) does in fact conform to the current "minimum standards". Therefore we as an organization whose goal is to promote the best practices of the Land Surveying profession endorse the submitted revision and the removal of survey marker detail 120-1 from MCDOT standards.

If we may be of future assistance please contact us.

With Regards,

Daniel R. Muth R.L.S.
Chair of the Board of Directors
Arizona Professional Land Surveyors Association

33-103. Monuments at section and quarter section corners; reestablishment of corners; monument requirements; destruction of monuments; classification

A. Landmarks or monuments established under the provisions of this article shall be set at the section corners and quarter section corners established by the United States survey. If there is a clerical error or omission in the government field notes or bearings, trees, mounds, fences or other locating evidences specified therein, or if they are destroyed or lost and there is no evidence by which the corners established by the United States survey can be identified, the land surveyor shall reestablish the corners under rules adopted by the United States for the survey of public lands.

B. Landmarks or monuments established pursuant to this section shall be presumptively at the section and quarter section corners as originally established by the United States survey.

C. The monument shall:

1. Be not less than two and one-half feet in length and constructed of durable material, preferably of metal rod or pipe.
2. Identify on the top of the monument the point of survey by punch mark or scribed cross.
3. Identify on the top of a monument set at section corners the proper numbering of the sections for which the monument forms a landmark.
4. Identify the quarter section for those monuments set at quarter section corners.
5. Bear the Arizona registration number of the land surveyor.
6. Be magnetically detectable.
7. Be placed firmly in the ground, leaving the top flush with the surface or recessed in a hand hole when placed on a public highway, or when not on a public highway set to the best judgment of the land surveyor to perpetuate the corner.

D. A person who knowingly or by gross negligence destroys, disfigures, removes or disturbs monuments described in subsection C or other permanent monuments set by the land surveyor which have the land surveyor's or public agency's cap or tag affixed to the monument is guilty of a class 2 misdemeanor.

E. A person acting independently or a person in responsible charge of another person who destroys, disfigures or disturbs monuments described in subsection C or other permanent monuments set by the land surveyor which have the land surveyor's or public agency's cap or tag affixed to the monument shall be civilly liable to the state, political subdivision or any other person for all costs associated with restoration or replacement of any monument destroyed, disfigured, removed or disturbed. The remedies under this subsection are in addition to any penalty which can be imposed under subsection D.

©2007 Arizona State Legislature.

privacy statment

ARIZONA BOUNDARY SURVEY MINIMUM STANDARDS

Definitions:

"Arizona Boundary Survey" means any one of more of the following:

(a) The marking of boundaries, the setting of monuments, or the restoration or rehabilitation of any monument marking a corner or line that controls real property.

(b) The determination of the location, on the ground, of any appurtenance which may potentially affect the rights and/or the enjoyment of real property.

(c) The determination of the position of any monument, reference point, or any other mark, when such monument or mark controls the location of boundaries or rights of ownership in real property.

(d) The presentation of any type of survey drawings, maps or plats, and/or reports-of-survey or any other documents as related to land boundary surveying, for the purpose of identifying the location of real property.

Land Surveying Minimum Standards

A land surveyor registered pursuant to the Act shall observe these minimum standards of practice as well as the applicable statutes and regulations of the Board.

1. There shall be a scope of services determined for every surveying engagement.

2. The land surveyor shall obtain and examine the record documents needed to perform the survey as described in the scope of services.

3. If the subject property is described as an aliquot part of, or as a fraction thereof, or referenced to the United States Public Land Survey System, the surveyor shall consult the pertinent United States Public Land Survey System source documents.

4. The land surveyor shall search for physical evidence that could affect the location and/or placement of boundary lines and property corners of the subject property.

5. The land surveyor shall determine the appropriate accuracy and make the required measurements necessary to adequately relate the positions of all apparent evidence pertinent to the boundary of the property. In no case shall the accuracy standard have a relative positional tolerance of more than 0.25 feet, plus 100 parts per million (PPM) with the accuracy given at the 95 per cent confidence level. Positional tolerance is the maximum acceptable amount of positional uncertainty for any physical point on the boundary survey relative to any adjoining physical point on the survey, including the lead-in courses. Positional uncertainty in location, due to random errors in measurement, of any physical point on a boundary survey, based on the 95 per cent confidence level.

6. The land surveyor shall retain documentation necessary to adequately convey the methods and results of any land boundary survey where such results-of-survey were not publicly recorded.

7. In the event of a disagreement with the measurements and/or monumented corner positions of another registrant, the land surveyor must make and document all reasonable efforts to contact the other registrant in an attempt to resolve the disagreement. The other registrant(s) shall make all information relevant to the disagreement available, to explain objections, and afford an opportunity for discussions, explanation and corrections necessary.

8. The land surveyor shall represent the locations, consistent with the best evidence available, of corner positions and boundary lines, as follows:

   A. If the land surveyor rejects an existing monument the land surveyor shall create a results-of-survey drawing that discloses the evidence, and shall explain in detail, the reason(s) for not accepting the monument. The surveyor shall file the drawing in the office of the county recorder, and provide a copy of the “record of survey” to the client.

   B. When accepting a found monument of the surveyed property that does not have any record or physical evidence identifying its creator, then where practicable to do so, the surveyor accepting the monument shall affix his/her registration license number to the existing monument.

   C. In no instance shall the surveyor be required to remove existing monuments unless the installation of a new monument is necessary to preserve the position of the corner. Existing monuments so replaced shall be noted in the field notes, and on the results-of-survey drawing or plat map, and where practical, shall be buried as a memorial alongside or beneath the new monument.

   D. These minimum monumentation standards are not meant to apply to natural boundaries. These standards recognize that there are land surveys where the placement of monuments is not normally required, such as easement determination surveys.

   E. Any land boundary survey performed as the basis for any division or partition of land shall cause all boundary corners to be monumented.

9. The following standards apply to establishing, replacing or setting boundary monuments:

A. If the monument is at either a Public Land Survey System section or ¼-section corner, refer to applicable state statutes relative to monumenting those positions.

B. All new monuments, including the surveyor's Arizona registration number thereon, shall provide a degree of permanency, consistent with that of adjacent terrain and physical features.

C. Whenever and wherever practicable, new or replacement boundary monuments, and witness corner monuments set shall satisfy the following minimum criteria:

1. The body of the monument shall be of metal or other such durable material.

2. The body of the monument shall be at least 16 inches in length.

3. The body of the monument shall be at least ½ inch in diameter.

4. The surveyor's Arizona registration number shall be affixed to or clearly stamped into the body of the monument.

5. The monument shall be magnetically detectable.

10. Where the point for a corner monument is such that, for all practical purposes, a permanent corner monument is not established, then at least one of the following two alternative monumentation procedures shall be used:

A. Witness Corner Monument: Such a monument is used where the boundary corner position cannot be occupied. Such a monumented surveyed point is set on the surveyed boundary line, or a prolongation thereof, and it shall be stamped "WC".

B. Reference Markers: Where a corner position is impractical to monument directly, or a witness corner cannot be set as described above, the surveyor shall cause to be set at least two Reference Markers. These are not set on the boundary lines and are to be identified as "RM".

11. In addition to sufficient mathematical ties to the controlling monuments of the survey, which enable the survey to be retraced by another surveyor, the surveyor's drawing must also show, as a minimum, the following items:

A. A basis of direction or bearings.

B. The surveyor's Arizona RLS stamp, with signature and date.

C. The surveyor’s statement that the survey was performed either by the surveyor or under the surveyor’s direct supervision.

D. A legend or table that identifies and explains all symbology and abbreviations used.

E. A list of pertinent reference documents that were used as a basis for the survey.

F. When setting a monument is impractical, the recorded results-of-survey drawing shall detail the reason for not setting the monument and show bearings and distances to the nearest corner, witness corner(s) or reference marker(s).

G. A north arrow.

H. The scale of the drawing.

12. The following criteria shall be adhered to when the surveyor includes any of the following as part of the results-of-survey drawing(s):

A. Horizontal and/or vertical control data, when used, shall be noted in detail. Where vertical data is referenced, the surveyor shall also include information about the controlling benchmark(s) and its (their) elevation(s).

B. Curve data shall be stated, as a minimum, in terms of radius, central angle, and length of curve, and as otherwise specified by local ordinance. In all cases, the curve data must be shown for the line(s) affected.

C. All non-tangent curve data shown must have sufficient additional information to allow them to be verified through mathematical analysis.

D. When any coordinates are shown on the drawing, such as those relating to the Arizona State Plane Grid Coordinates, Universal Transverse Mercator, or to any modified, or local coordinate system, then the following information shall be included:

1. The data on which the coordinates are based.

2. The zone(s) if applicable.

3. Modifications.

4. The coordinate basis of bearings.

5. The adjustment factors.

6. The source data of the coordinates.

13. The land surveyor shall ensure that the appropriate survey drawing(s) is(are) recorded whenever any of the following conditions are encountered:

A. Any land boundary survey monument found, and incorporated into the new survey, where that monument is not referred to in or by any previously recorded public record instrument.

B. Any existing land boundary monument, or found monument, referenced in a previously recorded public document, when the public document fails to adequately identify said monuments.

C. Any land boundary monuments are set in conjunction with the new survey.

D. Any new land division as defined under state statutes.

E. Any difference as measured between the land boundary or property corner monuments, where the new measured distance, as compared to a previously determined (“record”) distance, where such difference exceeds +/- 0.25 feet, plus 100 parts per million (PPM), of the overall distance between the points.

14. When created by a land surveyor, a written property description of a surveyed tract of land must provide information to properly locate the property and distinctly set it apart from all other property.

When the surveyed property's dimensions, boundaries and area are in substantial agreement with an existing recorded written description, then that existing recorded description shall be used.

For new descriptions, the following items and format apply:

A. The description shall contain, where applicable, a caption, a body, and qualifying clauses.

B. A metes, a bounds, or a metes and bounds description of an existing aliquot description, is as an additional description of the existing, precedent aliquot description, and shall be so noted as such.

C. Every Public Land Survey System aliquot description shall contain the applicable county, meridian, township, range and sectional information.

D. Every platted subdivision lot description shall contain the lot, block, unit (if applicable), name of the subdivision, city (if applicable), county, and recorder's document number.

E. Every written property line boundary description shall contain the applicable portions of the following:

1. The first part, called the caption, shall contain the applicable information from 14.C and/or 14.D.

2. The second part, called the body, shall contain all of the following attributes that apply:

a. A clearly stated basis of bearings, referencing two controlling monuments, which were physically existing at the time the property was surveyed.

b. All controlling monuments, noting their physical description, and whether found, set or replaced.

c. Sufficient data to enable a mathematical verification of the property being inscribed by the body of the description.

d. Where described, curved property boundaries shall contain sufficient information to allow verification of the data by mathematical analysis. Curves are presumed to be circular, tangent curve, all other non-tangent, and/or non-circular curves must be so noted in the description.

F. Inclusion of complete citations to maps, plats, documents, and other matters of record, which are to be incorporated into and made a part of the description by reference thereto.

G. The description shall be sealed with the surveyor's Arizona RLS stamp, with signature and date.

CASE 13-04
(04-08-2013)

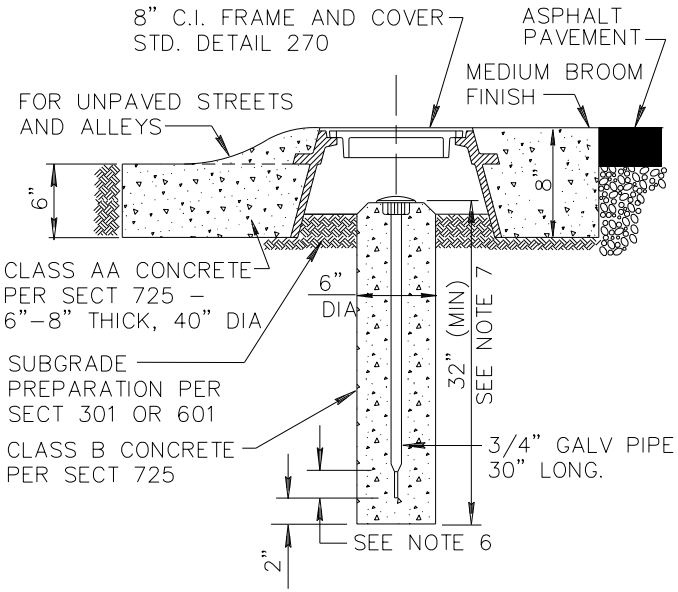

TYPE 'A'

(WITH FRAME)

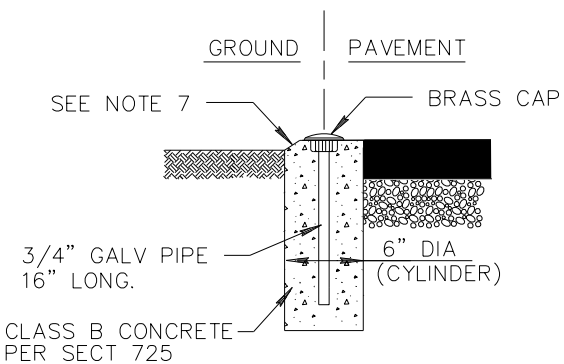

TYPE 'B'

(WITHOUT FRAME)

NOTES:

1. TYPE 'A' TO BE USED AT INTERSECTIONS OF MAJOR STREETS & COLLECTOR STREETS, SECTION CORNERS, SECTION 1/4 CORNERS, CENTER OF SECTIONS, AND AT OTHER POINTS AS SHOWN ON PLANS.
2. TYPE 'B' TO BE USED (EXCEPT WHERE TYPE 'A' IS SPECIFIED) AT INTERSECTION OF STREET CENTERLINES, PC'S, PT'S AND PI'S OF CURVES, SECTION 1/16 CORNERS, SUBDIVISION CORNERS, CHANGE IN ALIGNMENT OF SUBDIVISION BOUNDARIES, AND AT OTHER POINTS AS SHOWN ON PLANS.
3. TYPE 'C' TO BE USED AT CORNERS OF AND CHANGE IN ALIGNMENT OF SUBDIVISION BOUNDARIES WHERE CORNERS OR CHANGES IN ALIGNMENT FALL OUTSIDE OF PAVED AREAS OR UNPAVED ALLEYS AND STREETS.
4. CAP TO BE CONSTRUCTED OF RED BRASS OR BRONZE.
5. LETTERS TO BE APPROX. 1/32" WIDE & 1/32" DEEP.
6. FLATTENING THE BOTTOM 2" OF THE GALVANIZED PIPE IS OPTIONAL.
7. TOP OF CONCRETE POST IS CHAMFERED 3/4" EXCEPT WHEN SET FLUSH WITH PAVEMENT.
8. THE CAP SHALL SHOW THE POINT SURVEYED BY A PUNCH MARK OR SCRIBED CROSS AND THE CAP SHALL BE STAMPED WITH THE YEAR AND THE REGISTERED LAND SURVEYOR'S (RLS) REGISTRATION NUMBER.
9. WHEN APPLICABLE, THE CAP SHALL BE STAMPED WITH THE APPROPRIATE PUBLIC LAND MARKING PER CURRENT MANUAL OF INSTRUCTIONS FOR THE SURVEY OF PUBLIC LANDS OF THE UNITED STATES, PREPARED BY THE BUREAU OF LAND MANAGEMENT.
10. SUBMIT TO THE ENGINEER A COPY OF THE RECORDED CORNER RECORD OR RESULTS OF SURVEY TO DOCUMENT COMPLIANCE WITH THE ARIZONA BOARD OF TECHNICAL REGISTRATION REQUIREMENTS.

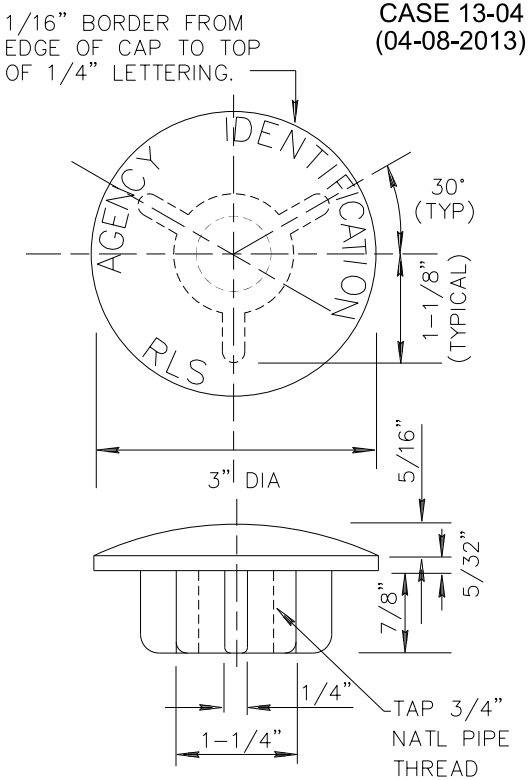

CAP DETAIL

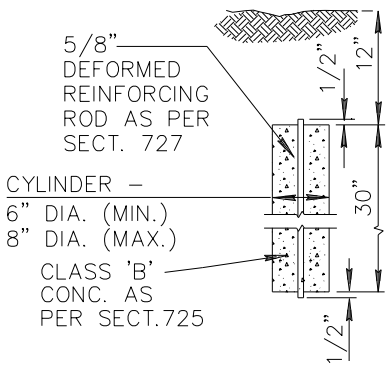

TYPE 'C'

DETAIL NO.		STANDARD DETAIL		REVISED	DETAIL NO.
120	MARICOPA ASSOCIATION of GOVERNMENTS	ENGLISH	SURVEY MARKER	01-01-2014	120