CITY OF BUCKEYE

Engineering Department

Case Number: 13-22

Date : 06-05-13

Revised: 08-13-14

To: MAG Specifications and Details Committee

From: Craig Sharp

RE:

- Section 625 - Manhole construction and drop sewer connections
- Section 775 – Bricks and masonry units
- Delete MAG Standard Detail 428 – Manhole Steps

Purpose: Deleting references to bricks and steps in manholes

Revisions:

This revision is to delete references for the use of bricks and steps in sanitary sewer manholes, this is to include the deletion of the manhole step detail 428.

SECTION 625

MANHOLE CONSTRUCTION AND DROP SEWER CONNECTIONS

625.1 DESCRIPTION:

625.1.1 ~~Sewer~~ Manholes: Construction shall consist of furnishing all materials and constructing manholes complete in place, as detailed, including foundation walls, ~~cast iron steps,~~ manhole frames, covers, and any incidentals thereto, at locations shown on the plans.

625.1.2 Sanitary Drop Sewer Connections: Construction shall consist of furnishing all materials and constructing drop sewer connections complete in place as detailed, including foundation materials, pipe, and any incidentals thereto, at locations shown on the plans.

625.2 MATERIALS:

Unless otherwise shown on the plans or specified in the special provisions, materials to be used shall conform with the following:

If allowed by the contracting agency, brick may be used for maintenance and adjustment of the existing sanitary sewer manhole or ring and cover. Bricks for manholes see Section 775.

Formatted: Justified, Widow/Orphan control, Tab stops: -0.57", Left + -0.5", Left + 0", Left + 0.25", Left + 0.38", Left + 0.5", Left + 1.5", Left + 2", Left + 2.5", Left + 3", Left + 3.5", Left + 4", Left + 4.5", Left + 5", Left + 5.5", Left + 6", Left + 6.5", Left + 7", Left + 7.5", Left + 8", Left + 8.5", Left + 9", Left + 9.5", Left + 10", Left + 10.5", Left + 11", Left + 11.5", Left + 12", Left + 12.5", Left + 13", Left

Cement mortar for manholes Class D, per Section 776.

Concrete for cast in place manhole~~s~~ bases shall be Class A, for drop sewer connection shall be Class C, per Section 725.

Pipe used in manholes or drop sewer connections shall comply with pipe requirements of Section 615.

Manhole frame, cover ~~and steps~~ Section 787 and cast in accordance with standard details.

~~Plastic manhole steps, which conform to O.S.H.A. and A.S.T.M. C 487 requirements, and steel manhole steps, which are completely encapsulated in corrosion resistant rubber and conform to O.S.H.A. and A.S.T.M. C 478 requirements, may be substituted for cast iron manhole steps. The manufacturer shall furnish the Engineer a certification indicating conformance.~~ Manhole steps shall not be used.

625.3 CONSTRUCTION METHODS:

625.3.1 Manholes: Manholes shall be constructed ~~of brick,~~ of precast concrete sections, or ~~of~~ cast in place concrete, ~~with cast iron manhole steps, frames and covers, in accordance with the standard details.~~ The invert channels shall be smooth and semi-circular in shape, conforming to the inside of the adjacent sewer sections. Changes in direction of flow shall be made with a smooth curve, having a consistent radius as large as the manhole will permit with no angle points. Changes in size and grade of the channels shall be made gradually, ~~and~~ evenly, and uniformly throughout the manhole base.

Invert channels may be formed of concrete or ~~brick masonry having a smooth mortared surface, may~~ be half tile laid in concrete ~~or brick,~~ or may be constructed by laying full section of sewer pipe through the manhole and breaking out the top half after the surrounding concrete ~~or brick masonry~~ has hardened. The ~~floor~~ bench of the manhole outside the channels shall be smoothed and shall slope towards the channels.

The excavation shall be in such a manor, access is maintained around the manhole base before, during, and after placement of the manhole. ~~made cylindrical to a diameter sufficient in size to permit sheeting if necessary and leave room that the bricks may be laid in a workmanlike manner and the outside mortar coat properly applied or the precast concrete sections or forms may be properly assembled.~~

A concrete foundation of Class A concrete shall be poured in accordance with the Standard Details and Section 505.

~~Brickwork shall not be laid upon a concrete foundation less than 24 hours after such foundation has been poured.~~ No brickwork shall be laid in water, nor, except as prescribed for curing, shall water be allowed to stand or run on any brickwork until the mortar has thoroughly set. Where new work is joined to existing unfinished work, the contact surfaces of the latter shall be thoroughly cleaned and moistened.

Bricks shall be thoroughly moistened prior to placing, and shall be laid in full cement mortar beds. Every course may be a header course, but at least every fourth course shall be a header course. The horizontal cross-section of the manhole shall be circular unless otherwise called for on the plans or standard details. An oval or egg-shaped section will not be permitted. ~~A double row lock course of brick in the manhole wall shall be arched over the top half of the circumference of all inlet and outlet pipes.~~ The brick manholes shall be mortared outside with ½ inch of cement mortar as shown ~~on the standard details~~. Inside of the brick wall shall be neatly pointed. The mortar coat shall be cured with a liquid membrane-forming compound conforming with Section 726 immediately after mortar has been placed and finished.

~~Frame and Cover.~~ All machined surfaces on the frame and cover shall be such that the cover will lie flat in any position in the frame and have a uniform bearing through its entire circumference. Any frame and cover which creates any noise when passed over by automobiles shall be replaced. Frames shall be set firmly in a bed of mortar true to line and grade, all as shown on the plans and as called for in these specifications.

Backfilling shall be done in accordance with the requirements for trench backfilling as stated in Section 601.

625.3.2 Sanitary Sewer Drop ~~Sewer~~ Connections: Drop sewer connections shall be constructed in conformance with standard details~~, as the case may be~~.

Backfilling shall be done in accordance with the requirements for trench backfilling as stated in Section 601.

625.4 MEASUREMENT:

Each type of manhole installed, shall be measured as a complete unit, no distinction shall be made based on manhole depth .~~Measurement will be per manhole installed, complete in place, regardless of depth.~~

625.5 PAYMENT:

Payment will be made at the contract unit price ~~bid~~ for each accepted manhole, and shall be compensation in full for furnishing and installing the manhole, complete in place, with formed or pre-cast inverts, concrete foundation, sanitary sewer drop connections ~~ladder rungs,~~ sheeting and bracing, removal of obstructions cast iron frame and cover, excavation and backfill, paving cut replacement in excess of the applicable pay widths authorized in Section 336, and any incidentals thereto, in conformance with the plans and specifications.

~~Payment will be made at the unit price bid each, and shall be compensation in full for furnishing and installing vitrified clay pipe sanitary sewer drop connections, concrete encasement, excavation, backfilling, water settling, compaction, sheeting and bracing, removal of obstructions, paving cut replacement, in excess of the applicable pay widths authorized in Section 336, testing, and all work incidental thereto in conformance with the plans and specifications.~~

- End of Section -

Formatted: Centered

SECTION 625

MANHOLE CONSTRUCTION AND DROP SEWER CONNECTIONS

625.1 DESCRIPTION:

625.1.1 Manholes: Construction shall consist of furnishing all materials and constructing manholes complete in place, as detailed, including foundation walls, manhole frames, covers, and any incidentals thereto, at locations shown on the plans.

625.1.2 Sanitary Drop Sewer Connections: Construction shall consist of furnishing all materials and constructing drop sewer connections complete in place as detailed, including foundation materials, pipe, and any incidentals thereto, at locations shown on the plans.

625.2 MATERIALS:

Unless otherwise shown on the plans or specified in the special provisions, materials to be used shall conform with the following:

If allowed by the contracting agency, brick may be used for maintenance and adjustment of the existing sanitary sewer manhole or ring and cover. Bricks for manholes see Section 775.

Cement mortar for manholes Class D, per Section 776.

Concrete for cast in place manhole bases shall be Class A, for drop sewer connection shall be Class C, Section per 725.

Pipe used in manholes or drop sewer connections shall comply with pipe requirements of Section 615.

Manhole frame, cover Section 787 and cast in accordance with standard details.

Manhole steps shall not be used.

625.3 CONSTRUCTION METHODS:

625.3.1 Manholes: Manholes shall be constructed of precast concrete sections, or cast in place concrete. ,The invert channels shall be smooth and semi-circular in shape, conforming to the inside of the adjacent sewer sections. Changes in direction of flow shall be made with a smooth curve, having a consistent radius as large as the manhole will permit with no angle points. Changes in size and grade of the channels shall be made gradually, evenly, and uniformly throughout the manhole base.

Invert channels may be formed of concrete or e be half tile laid in concrete or may be constructed by laying full section of sewer pipe through the manhole and breaking out the top half after the surrounding concrete has hardened. The bench of the manhole outside the channels shall be smoothed and shall slope towards the channels.

The excavation shall be in such a manor, access is maintained around the manhole base before, during, and after placement of the manhole.
A concrete foundation of Class A concrete shall be poured in accordance with the Standard Details and Section 505.

No brickwork shall be laid in water, nor, except as prescribed for curing, shall water be allowed to stand or run on any brickwork until the mortar has thoroughly set. Where new work is joined to existing unfinished work, the contact surfaces of the latter shall be thoroughly cleaned and moistened.

Bricks shall be thoroughly moistened prior to placing, and shall be laid in full cement mortar beds. Every course may be a header course, but at least every fourth course shall be a header course. The horizontal cross-section of the manhole shall be circular unless otherwise called for on the plans or standard details. An oval or egg-shaped section will not be permitted. The brick manholes shall be mortared outside with ½ inch of cement mortar as shown. Inside of the brick wall shall be neatly pointed. The mortar coat shall be cured with a liquid membrane-forming compound conforming with Section 726 immediately after mortar has been placed and finished.

All machined surfaces on the frame and cover shall be such that the cover will lie flat in any position in the frame and have a uniform bearing through its entire circumference. Any frame and cover which creates any noise when passed over by automobiles shall be replaced. Frames shall be set firmly in a bed of mortar true to line and grade, all as shown on the plans and as called for in these specifications.

Backfilling shall be done in accordance with the requirements for trench backfilling as stated in Section 601.

625.3.2 Sanitary Sewer Drop Connections: Drop sewer connections shall be constructed in conformance with standard details.

Backfilling shall be done in accordance with the requirements for trench backfilling as stated in Section 601.

625.4 MEASUREMENT:

Each type of manhole installed, shall be measured as a complete unit, no distinction shall be made based on manhole depth .

625.5 PAYMENT:

Payment will be made at the contract unit price for each accepted manhole, and shall be compensation in full for furnishing and installing the manhole, complete in place, with formed or pre-cast inverts, concrete foundation, sanitary sewer drop connections sheeting and bracing, removal of obstructions cast iron frame and cover, excavation and backfill, paving cut replacement in excess of the applicable pay widths authorized in Section 336, and any incidentals thereto, in conformance with the plans and specifications.

- End of Section -

SECTION 775

BRICK AND CONCRETE MASONRY UNITS (BLOCKS)

775.1 BRICK:

Brick shall be whole, sound, and hard burned and shall give a clear ringing sound when struck together. They shall be uniform in quality and shall be culled or sorted before delivery to the work.

775.1.1 Manhole Brick: **Agency approval is required prior to using brick within manholes. When Approved brick may be used for maintenance and adjustment of the existing manholes or rings and covers.** ~~Sewer and water manhole brick shall conform, except for dimensional tolerances, to the requirements of ASTM C32, Grade MM.~~

Manhole brick shall conform to Table 775-1.

TABLE 775-1			
MANHOLE BRICK DIMENSIONS			
Brick	**Inches Depth**	**Inches Width**	**Inches Length**
Standard Size Allowable Variations	2 1/4 ±1/8	3 1/2 ±1/8	7 1/2 ±1/4

The following paragraphs shall be added to the section on visual inspection:

No individual brick shall be rejected unless it shows visual evidence of major cracking. A major crack is defined as one that has at least one complete separation, for a distance of 1 3/4 inches, through the brick in any direction, including any cored area. Such a crack shall be regarded as affecting the serviceability of the brick and shall be rejected and not used in the structure.

Fifty bricks may be sampled at random intervals from any cube for visual inspection. Of the 50 samples, 45 must pass visual inspection for major cracks. Should less than 45 pass, the cube of brick shall be rejected and the brick must not be used in the structure.

775.1.2 Building Brick: Building brick shall conform to the requirements of ASTM C62, grade MW.

775.1.3 Facing Brick: Facing brick shall conform to the requirements of ASTM C216, Grade MW, Type FBS. The size, color, and texture shall be as specified on the plans or as approved by the Engineer.

775.2 CONCRETE MASONRY UNITS:

Unless otherwise noted on the plans or special provisions, concrete masonry units shall conform to ASTM C90, Normal Weight, Type I with a minimum compressive strength of 1900 psi.

The units shall be fully cured and shall have been made not less than 28 days prior to delivery.

The moisture content at the time of delivery shall not exceed 30 percent of the minimum absorption value of the units. The Contractor shall provide any protection he deems necessary to maintain the units in this condition until time of use.

The linear change from saturated to cool oven dry shall not exceed 0.0054 inches per linear foot or 0.045 of 1 percent conducted in accordance with test method in ASTM C426.

The units shall be made with normal weight aggregate conforming to ASTM C33.

The nominal size of the units shall be as indicated on the plans. The overall dimensions for width, height and length shall differ by not more than ±1/8 inch from the specified standard dimensions. Standard dimensions of units are the

manufacturer's designated dimensions. Nominal dimensions of units are equal to the standard dimensions plus the thickness of one mortar joint.

No less than 5 samples of the units shall be submitted to the Engineer for approval and to show the full variance of texture and full range of color. Units used in the work shall match the approved samples. These samples may be tested for strength.

All units shall be sound and free of cracks or other defects that would interfere with the proper placing of the unit or would significantly impair the strength or permanence of the construction. When units are to be used in an exposed setting, the face or faces that are to be exposed shall not show chips or cracks, not otherwise permitted, or other imperfections when viewed from a distance of not less than 6 feet under diffused lighting.

Units that are intended to serve as a base for plaster or stucco shall have a sufficiently rough surface to afford a good bond.

End of Section -

Formatted: Centered

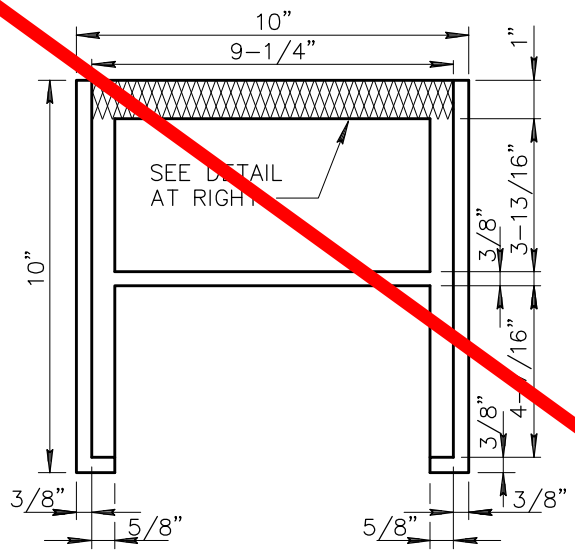

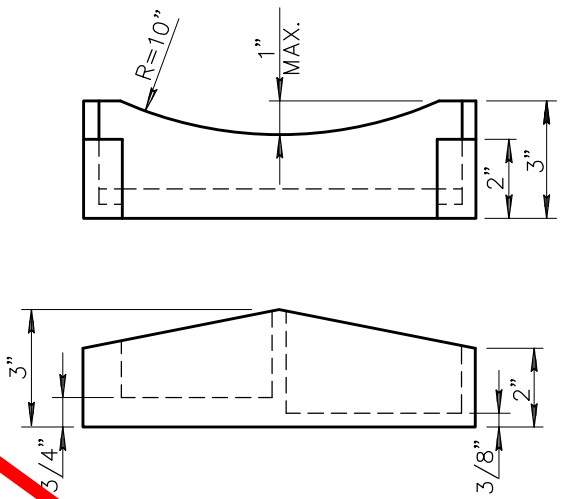

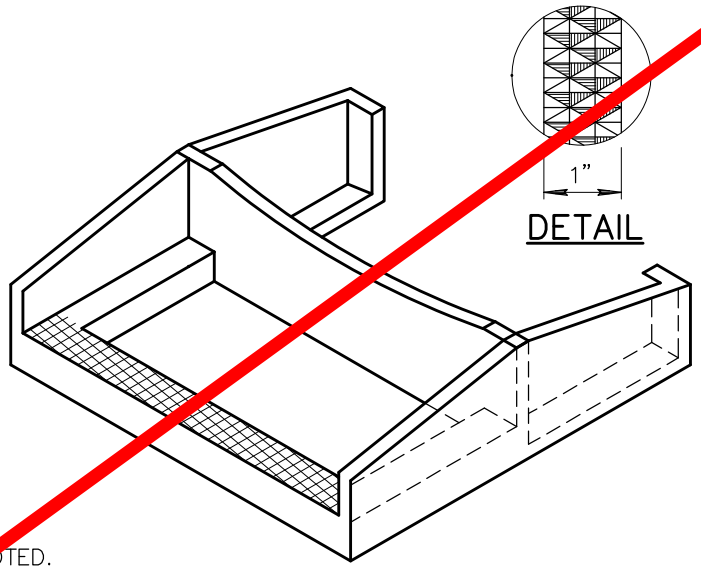

NOTES

1. ALL DIMENSIONS ARE MINIMUM EXCEPT WHERE NOTED.
2. CASTING AS PER SECT. 787.

CAST IRON MANHOLE STEP

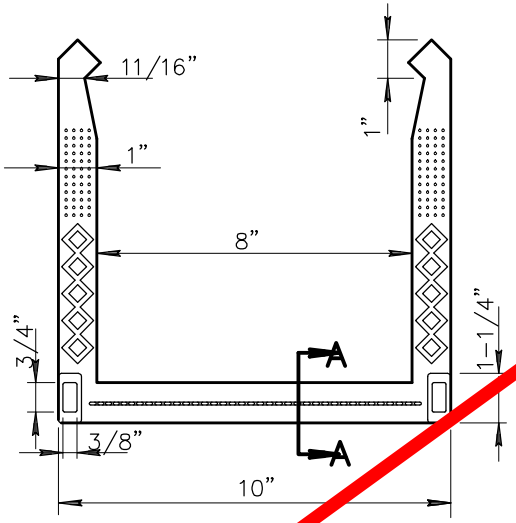

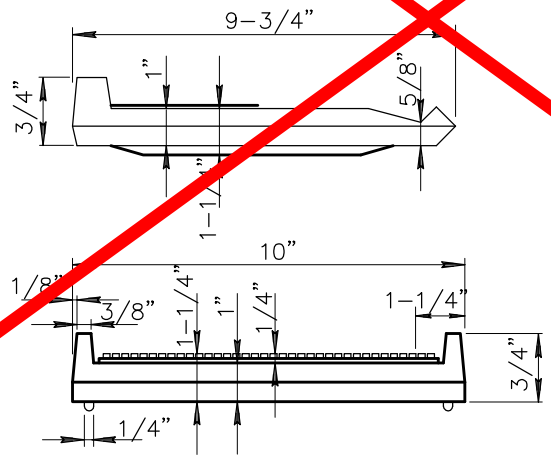

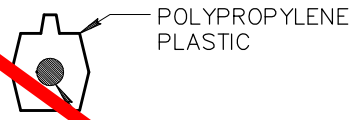

SECTION A-A

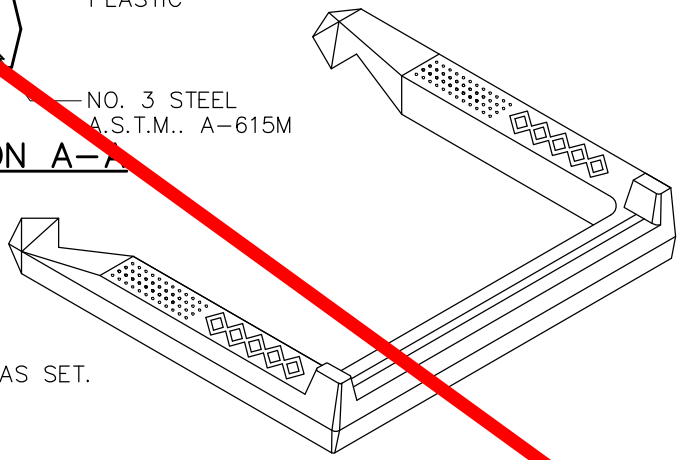

NOTES

1. STEPS SHALL BE PLACED INTO WET CONCRETE WALL DURING MANUFACTURE OR MORTARED INTO HOLES AFTER CONCRETE HAS SET.
2. POLYPROPYLENE MUST MEET REQUIREMENTS OF A.S.T.M. 2146, TYPE II, GRADE 16906.

POLYPROPYLENE MANHOLE STEP

DETAIL NO.				REVISED	DETAIL NO.
428	MARICOPA ASSOCIATION of GOVERNMENTS	STANDARD DETAIL ENGLISH	MANHOLE STEPS	01-01-1998	428

SECTION 775

BRICK AND CONCRETE MASONRY UNITS (BLOCKS)

775.1 BRICK:

Brick shall be whole, sound, and hard burned and shall give a clear ringing sound when struck together. They shall be uniform in quality and shall be culled or sorted before delivery to the work.

775.1.1 Manhole Brick: Agency approval is required prior to using brick within manholes. When Approved brick may be used for maintenance and adjustment of the existing manholes or rings and covers.

Manhole brick shall conform to Table 775-1.

TABLE 775-1			
MANHOLE BRICK DIMENSIONS			
Brick	**Inches Depth**	**Inches Width**	**Inches Length**
Standard Size	2 1/4	3 1/2	7 1/2
Allowable Variations	±1/8	±1/8	±1/4

The following paragraphs shall be added to the section on visual inspection:

No individual brick shall be rejected unless it shows visual evidence of major cracking. A major crack is defined as one that has at least one complete separation, for a distance of 1 3/4 inches, through the brick in any direction, including any cored area. Such a crack shall be regarded as affecting the serviceability of the brick and shall be rejected and not used in the structure.

Fifty bricks may be sampled at random intervals from any cube for visual inspection. Of the 50 samples, 45 must pass visual inspection for major cracks. Should less than 45 pass, the cube of brick shall be rejected and the brick must not be used in the structure.

775.1.2 Building Brick: Building brick shall conform to the requirements of ASTM C62, grade MW.

775.1.3 Facing Brick: Facing brick shall conform to the requirements of ASTM C216, Grade MW, Type FBS. The size, color, and texture shall be as specified on the plans or as approved by the Engineer.

775.2 CONCRETE MASONRY UNITS:

Unless otherwise noted on the plans or special provisions, concrete masonry units shall conform to ASTM C90, Normal Weight, Type I with a minimum compressive strength of 1900 psi.

The units shall be fully cured and shall have been made not less than 28 days prior to delivery.

The moisture content at the time of delivery shall not exceed 30 percent of the minimum absorption value of the units. The Contractor shall provide any protection he deems necessary to maintain the units in this condition until time of use.

The linear change from saturated to cool oven dry shall not exceed 0.0054 inches per linear foot or 0.045 of 1 percent conducted in accordance with test method in ASTM C426.

The units shall be made with normal weight aggregate conforming to ASTM C33.

The nominal size of the units shall be as indicated on the plans. The overall dimensions for width, height and length shall differ by not more than ±1/8 inch from the specified standard dimensions. Standard dimensions of units are the manufacturer's designated dimensions. Nominal dimensions of units are equal to the standard dimensions plus the thickness of one mortar joint.

No less than 5 samples of the units shall be submitted to the Engineer for approval and to show the full variance of texture and full range of color. Units used in the work shall match the approved samples. These samples may be tested for strength.

All units shall be sound and free of cracks or other defects that would interfere with the proper placing of the unit or would significantly impair the strength or permanence of the construction. When units are to be used in an exposed setting, the face or faces that are to be exposed shall not show chips or cracks, not otherwise permitted, or other imperfections when viewed from a distance of not less than 6 feet under diffused lighting.

Units that are intended to serve as a base for plaster or stucco shall have a sufficiently rough surface to afford a good bond.

End of Section -