Chandler • Arizona
Where Values Make The Difference

MEMORANDUM **Case # 13-15**

DATE: August 6th, 2014

TO: MAG Specifications and Details Committee Members

FROM: Warren White, City of Chandler Representative

SUBJECT: Status Update on Proposed Revisions to MAG Sections 101, 601, 603, 615, 618, and Detail 200

- Providing both complete final and redline versions in this update. No changes from June packet.

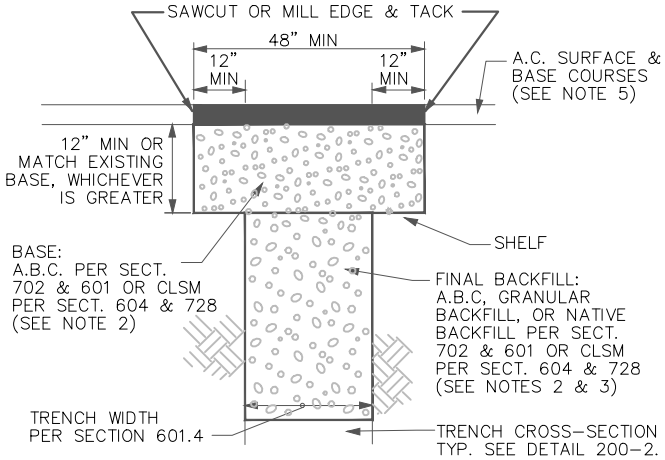

"T TOP" TRENCH REPAIR

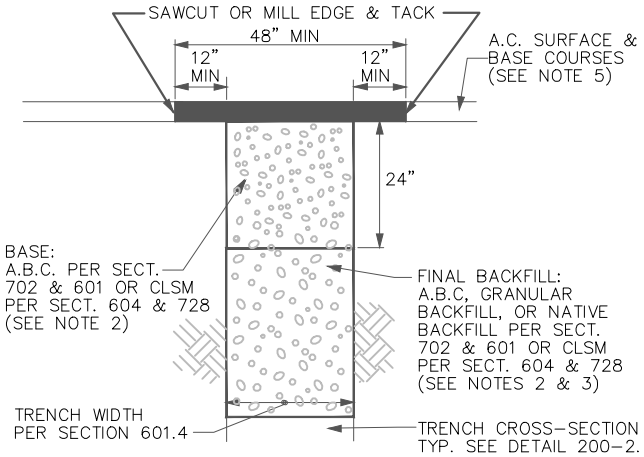

TYPE "A" TRENCH REPAIR

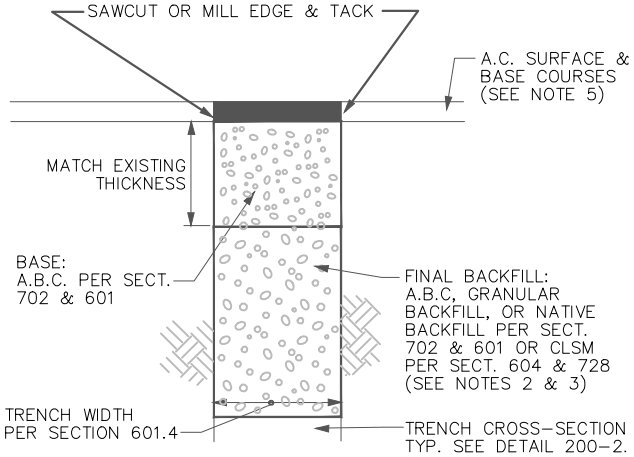

TYPE "B" TRENCH REPAIR

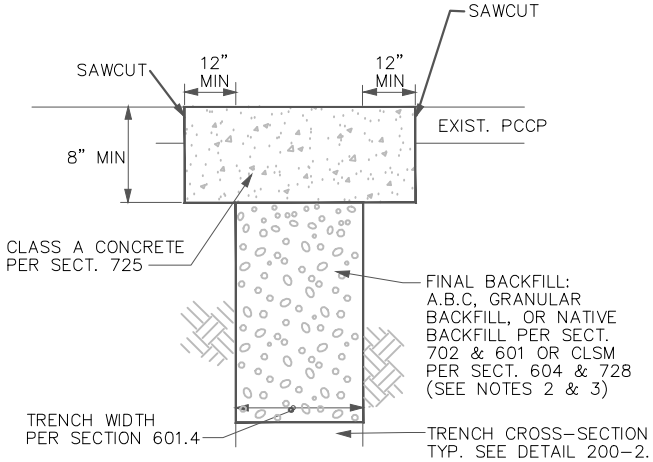

TYPE "C" TRENCH REPAIR

(TRENCH IN PORTLAND CEMENT CONCRETE PAVEMENT)

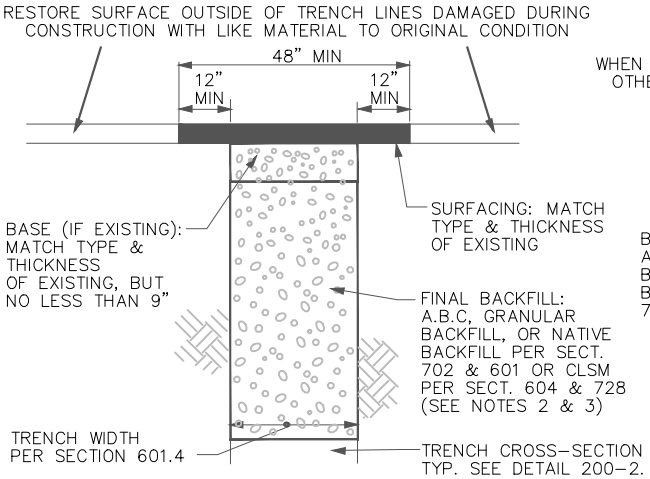

TYPE "D" TRENCH REPAIR

(TRENCH NOT UNDER CONCRETE OR ASPHALT PAVEMENT)

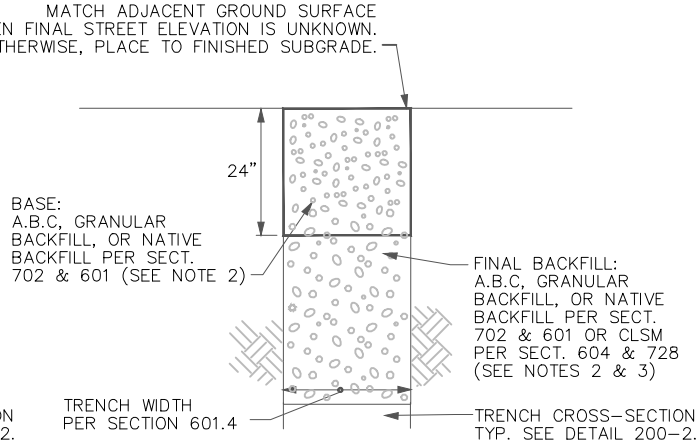

TYPE "E" TRENCH REPAIR

(TRENCH IN FUTURE ROADWAY PRISM OR ALLEY)

NOTES:

1. PAVEMENT MATCHING AND SURFACE REPLACEMENT SHALL BE IN ACCORDANCE WITH SECTION 336.
2. TYPE OF BACKFILL AND BASE (IF APPLICABLE) SHALL BE AS NOTED HEREIN UNLESS OTHERWISE SPECIFIED IN CONTRACT DOCUMENTS. IF NOT SPECIFIED, CLSM SHALL BE 1/2-SACK PER SECTIONS 604 AND 728.
3. TRENCHES LESS THAN 24" WIDE SHALL BE BACKFILLED FROM TOP OF BEDDING TO BOTTOM OF SURFACING MATERIALS WITH 1/2-SACK CLSM PER SECTIONS 604 AND 728.
4. BASE, FINAL BACKFILL AND PIPE EMBEDMENT ZONE. COMPACTION REQUIREMENTS SHALL BE IN ACCORDANCE WITH SECTION 601 OR SECTION 603.
5. ASPHALT CONCRETE SURFACE AND BASE COURSES SHALL COMPLY WITH SECTION 336.2.4.1 UNLESS OTHERWISE SPECIFIED IN CONTRACT DOCUMENTS.
6. USE TYPE "A" FOR LONGITUDINAL TRENCH REPAIR AND USE "T-TOP" FOR TRANSVERSE TRENCH REPAIR (SEE DETAIL 200-2) UNLESS OTHERWISE SPECIFIED IN CONTRACT DOCUMENTS. TYPE "B" TRENCH REPAIR MAY BE USED FOR TRANSVERSE TRENCH REPAIR IF SPECIFIED BY THE AGENCY.
7. PROVIDE MINIMUM 12" WIDE SHELF AS SHOWN IN "T-TOP" TRENCH REPAIR AT ENDS OF TYPE "A" TRENCH REPAIR EXCEPT WHERE EDGE ABUTS EXISTING CONCRETE.
8. USE "T-TOP" PAVEMENT REPLACEMENT WHERE A TRENCH IS NOT PARALLEL TO A STREET OR GOES THROUGH AN INTERSECTION.
9. SEE DETAIL 200-2 FOR REMNANT PAVEMENT REMOVAL REQUIREMENTS.
10. EXPOSED COPPER OR POLYETHYLENE WATER PIPE UP TO 2" IN DIAMETER IN TRENCHES TO BE BACKFILLED WITH CLSM SHALL BE WRAPPED WITH MINIMUM 3/4" THICK PREFORMED PIPE-COVERING FOAM INSULATION BEFORE PLACING CLSM.

DETAIL NO.				PROPOSED	DETAIL NO.
200-1	MARICOPA ASSOCIATION of GOVERNMENTS	STANDARD DETAIL ENGLISH	BACKFILL, PAVEMENT AND SURFACE REPLACEMENT	01-01-2015	200-1

DRAFT 3-12-2014

LONGITUDINAL TRENCH

(TRENCH IN PAVEMENT PARALLEL TO TRAFFIC)

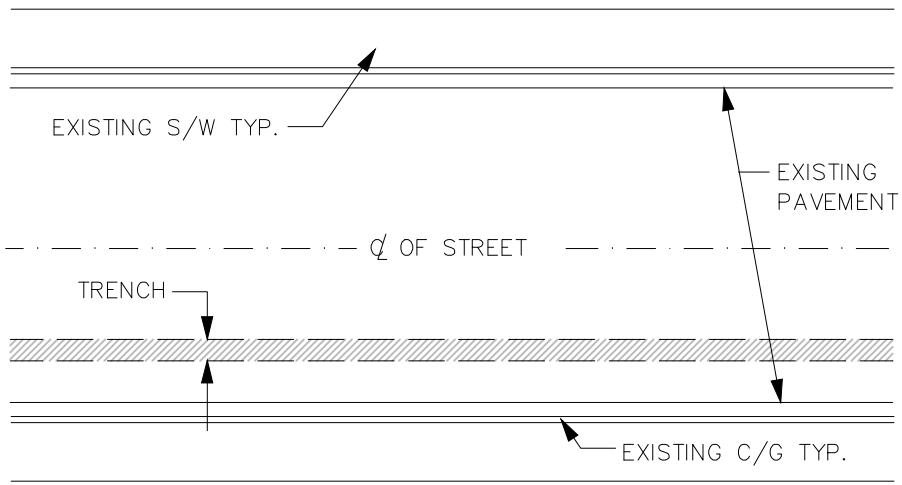

TRANSVERSE TRENCH

(TRENCH IN PAVEMENT NOT PARALLEL TO TRAFFIC)

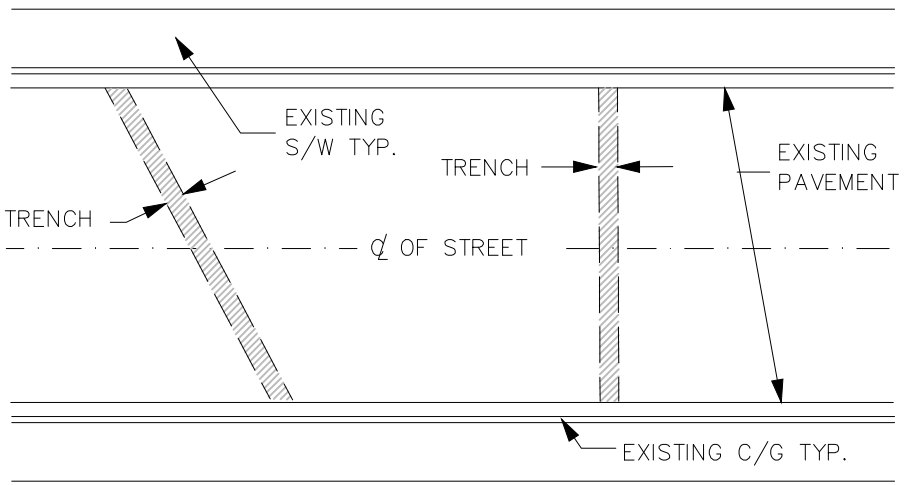

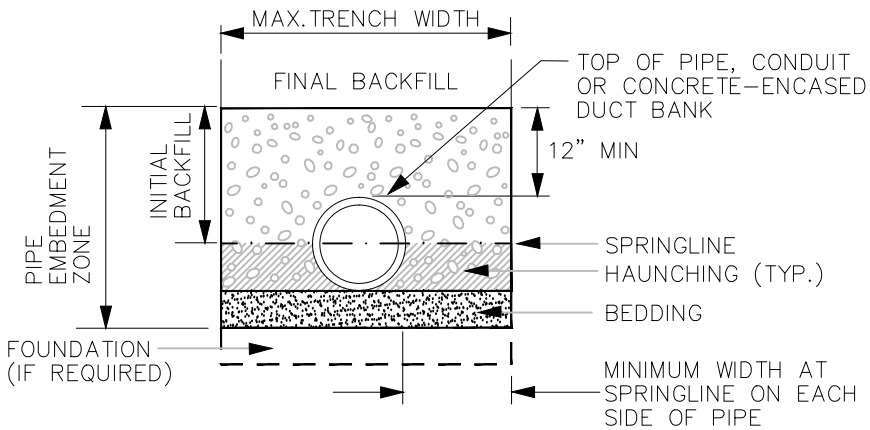

TRENCH CROSS-SECTION DETAIL

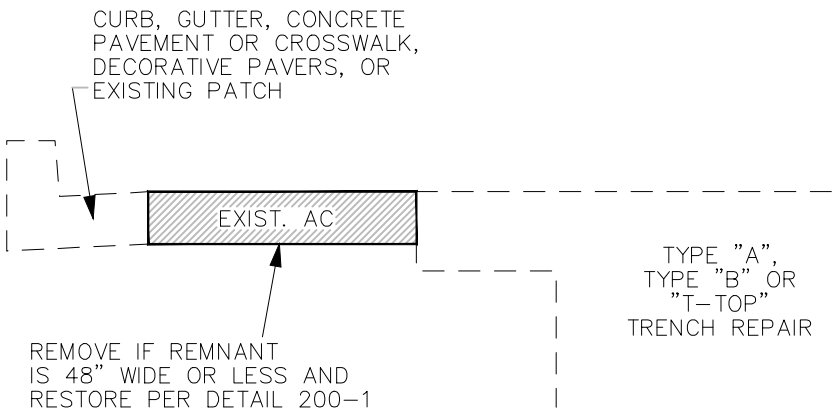

REMNANT PAVEMENT REMOVAL

NOTES:

1. SEE SECTION 601 FOR RIGID PIPE INSTALLATION AND 603 FOR FLEXIBLE PIPE INSTALLATION.
2. SEE MAG DETAIL 200-1 FOR DETAILED TRENCH REPAIR REQUIREMENTS FOR TRENCH TYPES NOTED HEREIN.
3. SEE MAG DETAIL 211 FOR REQUIREMENTS REGARDING THE USE OF PLATING TRANSVERSE TRENCHES. USE OF STEEL PLATES SHALL NOT EXCEED 72 HOURS AFTER COMPLETION OF BACKFILL AND PRIOR TO FINAL PATCHING.

DETAIL NO.		STANDARD DETAIL		PROPOSED	DETAIL NO.
200-2	MARICOPA ASSOCIATION of GOVERNMENTS	ENGLISH	BACKFILL, PAVEMENT AND SURFACE REPLACEMENT	01-01-2015	200-2

DRAFT 3-12-2014

SECTION 101

ABBREVIATIONS AND DEFINITIONS

101.1 ABBREVIATIONS:

Wherever the following abbreviations are used in these specifications, standard details or on the plans, they are to be constructed the same as the respective expressions represented.

AASHTO	American Association of State Highway and Transportation Officials
AAN	American Association of Nurserymen
AB	Aggregate base
Aban	Abandon
ABC	Aggregate base course
AC	Asphalt cement or concrete
ACB	Asphalt concrete base
ACI	American Concrete Institute
ACP	Asbestos cement pipe
ACPA	American Concrete Pipe Association
ACWS	Asphalt concrete wearing surface
AFRB	Arizona Fire Rating Bureau
AGC	Associated General Contractors of America, Inc.
Agg	Aggregate
ADOT	Arizona Department of Transportation
Ahd	Ahead
AIA	American Institute of Architects
AIEE	American Institute of Electrical Engineers
AISC	American Institute of Steel Construction
ANSI	American National Standards Institute
APA	American Plywood Association
Approx	Approximate
APWA	American Public Works Association
AR	Aged residue
ARIZ	Arizona Department of Transportation test method
ARS	Arizona Revised Statutes
ASCE	American Society of Civil Engineers
ASME	American Society of Mechanical Engineers
ASTM	American Society for Testing Materials
Ave	Avenue
AWPA	American Wood Preservers Association
AWSC	American Welding Society Code
AWWA	American Water Works Association
Bbl	Barrel
BC	Beginning of curve
BCR	Beginning of curb return
Beg	Beginning
Bk	Book or Back
Blvd	Boulevard
BM	Bench Mark or Board Measure
Brg	Bearing
BST	Bituminous Surface Treatment
BTB	Bituminous Treated Base
BTU	British Thermal Units
BVC	Beginning of vertical curve
C	Centigrade or Curb
CB	Catch Basin
CBF&C	Catch basin frame & cover
CC or C/C	Center to Center
CE	City or County Engineer
Cem	Cement
CF	Curb face
cfs	Cubic Feet per second
CIP	Cast Iron pipe
CIPP	Cast-in-place concrete pipe
CL or C	Centerline
Cm	Centimeter
CMP	Corrugated metal pipe
CO	Clean out
Col	Column
Conc	Concrete
Const	Construct
CP	Concrete pipe (non-reinforced)
CTB	Cement Treated Base
Cu	Cubic
Deg	Degree
DF	Douglas Fir
DG	Decomposed granite
Dia	Diameter
Dim	Dimension
DIP	Ductile Iron Pipe
Div	Division
Dr	Drive
Drwg	Drawing
Dwy	Driveway
Ea	Each
Ease	Easement
E	East
EC	End of curve
ECR	End of curb return
El or Elv	Elevation
Equa or Eq	Equation
EVC	End of vertical curve
Ex or Exist	Existing
F	Fahrenheit
FB	Field book
F & C	Frame & cover
FH	Fire hydrant
FL or F	Floor line or flow line
Fl El	Floor Elevation
Fnd	Found
fps	Feet per second
FS	Finished surface
FSS	Federal Specifications and Standards
Ft	Foot or feet
G	Gutter
Ga	Gage
Galv	Galvanized
GL	Ground line
Gpm	Gallons per minute

Gr	Grade
H	High or height
HC	House connection
Hdwl	Headwall
Horiz	Horizontal
Hwy	Highway
ICA	Industrial Commission of Arizona
ID	Improvement District or inside diameter
IE	Invert Elevation
IEEE	Institute of Electrical and Electronic Engineers
In	Inch
Inv	Invert
IP	Iron Pipe
IPS	Iron Pipe Size
Irrig	Irrigation
Jt	Joint
JC	Junction Chamber
Jct	Junction
JS	Junction Structure
L	Length
Lb	Pound
L&T	Lead and tack
LD	Local depression
LF	Linear Feet
LH	Lamp hole
Lin	Linear
Long	Longitudinal
Lt	Left
M	Map or maps
MAG	Maricopa Association of Governments
Max	Maximum
MCR	Maricopa County Records
Meas	Measured
MH	Manhole
MHF&C	Manhole frame and cover
Min	Minutes or minimum
Misc	Miscellaneous
ML or M	Monument line
mm	Millimeter
Mon	Monolithic or monument
MTD	Multiple tile duct
N	North
NBS	National Bureau of Standards
NCPI	National Clay Pipe Institute
NE	Northeast
NEC	National Electric Code
NEMA	National Electrical Manufacturer's Association
NFPA	National Fire Protection Association
NP	Non-plastic
NPI	Non pay item
NSC	National Safety Council
NSF	National Sanitation Foundation
NW	Northwest
No	Number
OC	On center
OD	Outside diameter
Oz	Ounces
P.C	Point of curvature
PCC	Point of compound curve or Portland Cement Concrete
PI	Point of intersection or plastic index
PL	Property line
POC	Point of Curve
POS	Point of Spiral
PP	Power pole
ppm	Parts per million
PRC	Point of reverse curve
Prod	Produced
Prop	Proposed or property
psi	Pounds per square inch
psf	Pounds per square foot
PT or POT	Point of Tangent
P&TP	Power and telephone pole
Pvmt	Pavement
Q	Rate of flow
R	Radius
RC	Reinforced concrete
RCP	Reinforced concrete pipe
Rd	Road
Rdwy	Roadway
Reinf	Reinforced, Reinforcing
Ret Wall	Retaining Wall
RGRCP	Rubber Gasket Reinforced Concrete Pipe
rpm	Revolutions Per Minute
Rt	Right
R/W	Right-of-way
S	South or slope
SAE	Society of Automotive Engineers
San	Sanitary
SC	Spiral to Curve
SCCP	Steel cylinder concrete pipe
SD	Storm drain or Sewer District
Sdl	Saddle
Sec	Seconds
Sect	Section
SE	Southeast
Sht	Sheet
Spec	Specifications
SPR	Simplified Practice Recommendation
Sp MH	Special manhole
Sq Ft Yd	Square Foot, Yard
SS	Sanitary sewer
St	Street
Sta	Station
Std	Standard
Str gr	Structural grade
Struct	Structure or structural
SW	Southwest
T	Tangent Distance
Tel	Telephone

Temp	Temporary
TH	Test hole
TP	Telephone pole
Tr	Tract
Trans	Transition
TS	Traffic signal or Tangent to spiral
TSC	Traffic signal conduit
Typ	Typical
UL	Underwriters' Laboratories Inc.
USC & GS	United States Coast and Geodetic Survey
USGS	United States Geological Survey
V	Velocity of flow
VC	Vertical curve
VCP	Vitrified clay pipe
Vert	Vertical
W	West or width
WI	Wrought iron
WS	Wearing surface
Wt	Weight
Yd	Yard
‘	feet or minutes
“	inches or seconds
°	degrees
%	percent
#	number or pound
@	at
/	per
=	equals

101.2 DEFINITIONS AND TERMS:

Whenever in these specifications or in other contract documents the following terms or pronouns in place of them are used, the intent and meaning shall be interpreted as follows:

Addendum: A supplement to any of the Contract Documents issued, in writing, after advertisement of but prior to the opening of bids for a contract.

Advertisement: The public announcement, as required by law, inviting bids for work to be performed or materials to be furnished.

Agency: The governmental agency for which the construction is being done, either by permit or contract.

Architect: The individual or firm who has accomplished the architectural services for the project, including his representatives.

Arizona Test Method: Arizona Department of Transportation Materials Testing Manual test method.

Award: The formal action of the governing body is accepting a proposal.

Backfill: Material placed in an excavated space to fill such space. For trenches, see definitions for Initial Backfill and Final Backfill.

Base Course: The upper course of the granular base of a pavement or the lower course of an asphalt concrete pavement structure.

Bedding: A backfill material layer placed on top of the pipe foundation to the bottom of the pipe, typically 4 – 6 inches in height. The bedding establishes line and grade to provide firm, but not hard, pipe support.

Bidder: Any qualified individual, firm, partnership, corporation or combination thereof, acting directly or through a duly authorized representative who legally submits a proposal for the advertised work.

Board of Supervisors: The Maricopa County Board of Supervisors acting under the authority of the laws of the State of Arizona.
[Type a quote from the document or the summary of an interesting point. You can position the text box anywhere in the document. Use the Drawing Tools tab to change the formatting of the pull quote text box.]

Bond Issue Project: A project financed from bonds issued by the City or County pledging credit or a revenue resource.

Bridge: A structure, including supports, erected over a depression or an obstruction, as water, highway, or railway, and having a track or passageway for carrying traffic or other moving loads and having a length measured along the center of roadway of more than 20 feet between undercopings of abutments or extreme ends of openings for multiple boxes.

(Length) The length of a bridge structure is the over-all length measured along the line of survey stationing back to back of backwalls of abutments, if present, otherwise end to end of the bridge floor; but in no case less than the total clear opening of the structure.

(Roadway Width) The clear width measured at right angles to the longitudinal centerline of the bridge between the bottom or curbs or guard timbers or in the case of multiple heights of curbs, between the bottoms of the lower risers.

Budget Project: A project financed by funds from General Tax levies and shared revenue funds set aside in the annual budget adopted by the Council or Board of Supervisors.

Building: Any structure built for the support, shelter, or enclosure of persons, animals, chattel or movable property.

Building Code: A regulation adopted by the governing body establishing minimum standards of construction for the protection of the public health, safety, and welfare in terms of measured performance rather than in terms of rigid specification of materials and methods.

Calendar Day: Every day shown on the calendar.

Call for Bids: The standard forms inviting proposals or bids.

"Careful and prudent manner": means conducting excavation in such a way that when it approaches within twenty-four inches of the underground facility located and marked by the owner or operator, by stakes, paint or in some customary manner, the exact location is manually determined, and the uncovered facility is supported and protected.

Change Order: A written order issued by the Engineer to the Contractor to make changes in the work or to perform extra work, and setting forth conditions for payment and/or adjustment in time of completion.

City: A municipal corporation, organized and existing under and by virtue of the laws of the State of Arizona.

City/County Clerk: The duly authorized person who performs the duties of clerk for the Contracting Agency.

Completion Time: The number of calendar days for completion of an act, including authorized time extensions. In case a calendar date of completion is shown in the proposal in lieu of the number of calendar days, the contract shall be completed by that date. The time within which an act is to be done shall be computed by excluding the first and including the last day; and if the last day be Sunday or a legal holiday, that shall be excluded.

Conflicting Utility: An existing utility, shown or not shown on the plans is conflicting when any part of the utility falls within the dimensions of the new installation, such that it would be in physical contact with the new installation.

Construction Project: The erection, installation, remodeling, alteration, of durable facilities upon, under, or over the ground. This shall include, but is not limited to buildings, roadways and utility pipes, lines, poles or other structures.

Contingent Bid Item: This is a minor bid item which is likely, but not certain, to occur during the course of work. If the Engineer determines that this work is required, the Contractor will accomplish the work and payment will be made based on the contingent unit bid price included in the proposal. Since the quantity listed in the proposal is primarily for bid comparison, the amount of work required by the Engineer may vary materially from this.

Contract: The written instrument executed by the Contractor and the Contracting Agency by which the Contractor is bound to furnish all labor, equipment, and materials and to perform the work specified, and by which the Contracting Agency is obligated to compensate the Contractor therefore at the prices set forth therein. The Contract Documents are herewith by reference made a part of the contract as if fully set forth therein.

Contract Documents: All the integral documents of the contract, including but not limited to, Call for Bids, Plans, Standard Specifications and Details, Special Provisions, Proposal, Addenda, Performance Bond, Payment Bond, Certificates of Insurance, Ordinance, Contract, and Change Orders.

Contracting Agency: The legal entity that has contracted for the performance of the work or for whom the work is being performed.

Contractor: The individual, firm, partnership, corporation or combination thereof entering into a contract with the Contracting Agency to perform the advertised work.

Council: The City Council which by law constitutes the Legislative Department of the City.

County: Maricopa County, organized and existing under and by virtue of the laws of the State of Arizona.

Culvert: Any structure not classified as a bridge, which provides an opening under or adjacent to the roadway.

Days: Unless otherwise designated, days will be understood to mean calendar days.

Emergency: Unforeseen occurrences and combinations of circumstances involving the public welfare or the protection of work already done under the Contract Documents, or which endanger life or property and call for immediate action or remedy.

Engineer: The person, appointed as City or County Engineer by the Council or the Board of Supervisors, acting directly or through his duly authorized representative.

Equipment: (Construction) — All machinery and equipment, together with the necessary supplies for upkeep and maintenance, and also tools and apparatus necessary for the proper construction and acceptable completion of work. (Installed) — All material or articles used in equipping a facility as furnishings or apparatus to fulfill a functional design.

Extra Work: An item of work not provided for in the contract as awarded but found essential to the satisfactory completion of the contract within its intended scope.

Final Backfill: The area of a pipe trench backfill envelope defined as the area above initial backfill to the top of the trench or to the bottom of the road base material. Final backfill is typically compacted native material.

Flooding: Flooding will consist of the inundation of the entire lift with water, puddle with poles or bars to insure saturation of the entire lift.

Force Account Work: Work done by personnel of the Contracting Agency as in-house work.

Foundation: For buildings or structures, this will be the substructure. For a pipe trench the foundation is defined as the native or prepared material upon which the bedding material is placed.

Full Depth Pavement: An asphalt concrete pavement structure in which the granular base and subbase are replaced by proportionate thicknesses of asphalt concrete.

Haunching: The area of a pipe trench backfill envelope that provides the majority of resistance against soil and traffic loadings. The haunching area is defined as the zone between the bottom of the pipe and the centerline, or springline, of the pipe.

Improvement District Project: A project financed by assessments against the property included in a special assessment district authorized under, or implemented by an act of the legislature of the State and/or a procedural ordinance of the City or County.

Initial Backfill: The area of a pipe trench backfill envelope defined as the area between the springline and a minimum of 12 inches above the crown of the pipe.

Inspector: The Engineer's authorized representative assigned to make detailed inspections of contract performance.

Laboratory: The established materials testing laboratory of the Contracting Agency's Engineering Department, or other laboratories acceptable to and/or authorized by the Engineer to test materials and work involved in the Contract.

Major Item: A major item shall be the total of any item of work and/or materials specified in the bid schedule that exceeds the amount established in Table 109-1.

Materials: Any substance specified in the project, equipment and other material used or consumed in the performance of the work.

Median: The portion of a divided highway separating the roadways used by traffic going in opposite directions.

Native Material: A sound earthen material free from broken concrete, broken pavement, wood or other deleterious material with no piece larger than 4 inches.

Non Pay Item: An item of work for which no separate payment will be made under the proposal, but which must be included as an incidental cost for payment on an associated item included in the proposal.

Notice of Award: A letter from the City or County Clerk advising the Contractor that he is the successful bidder and the Council or Board of Supervisors has accepted his proposal.

Notice to Proceed: A directive issued by the Engineer, authorizing the Contractor to start the work or improvements required in the Contract.

Obligee: One to whom another is obligated.

Open Trench: The excavated area shall be considered as open trench until all the aggregate base course for pavement replacement has been placed and compacted or, if outside of a pavement area, until the excavated area is brought to finish grade or natural grade.

Owner: The City or County, acting through its legally constituted officials, officers or employees.

Pavement: Any surfacing of streets, alleys, sidewalks, courts, driveways, etc., consisting of mineral aggregate bound into a rigid or semi-rigid mass by a suitable binder such as, but not limited to, Portland cement or asphalt cement.

Pavement Structure: The combination of subbase, base course, and surface course placed on a subgrade to support the traffic load and distribute it to the roadbed.

Pay Item: A detail of work for which separate payments are to be made under the Contract, as specified in the proposal.

Payment Bond: The security provided by the Contractor solely for the protection of claimants, supplying labor and materials to the Contractor or his Subcontractors.

Performance Bond: The security provided by the Contractor solely for the protection of the Contracting Agency and conditioned upon the faithful performance of the contract in accordance with the plans, specifications and conditions thereof.

Permit: The license to do construction in public rights-of-way and/or easements; issued by an Agency to a Contractor working for another party.

Pipe Embedment Zone: The area of a pipe trench backfill envelope, consisting of the bedding, haunching, and initial backfill areas.

Plans: All approved drawings or reproductions thereof pertaining to the work and details therefore, which are made a part of the Contract Documents.

Plant: The Contractor's and/or subcontractor's facilities, including but not limited to small tools and mobile equipment, located on and/or offsite, necessary for preparation of materials and prosecution of work for the project.

Principal: The individual, firm or corporation primarily liable on an obligation, as distinguished from a surety.

Professional Engineer: A person who has a current engineering registration granted by the Arizona State Board of Technical Registration in one or more branches of engineering recognized by the board.

Profile Grade: The trace of a vertical plan intersecting the top surface of the proposed wearing surface, usually along the longitudinal centerline of the roadbed. Profile grade means either elevation or gradient of such trace according to the context.

Project: A specific coordinated construction or similar undertaking identified by a single project number and bid and awarded as one contract. On occasion two or more projects may be bid and awarded as a single contract.

Proposal: The offer of a bidder on the prescribed form, to perform the work and to furnish the labor and materials at the prices quoted.

Proposal Form: The approved form on which the Contracting Agency requires bids to be prepared and submitted for the work.

Proposal Guarantee: The security furnished with a bid to guarantee that the bidder will enter into the contract if his bid is accepted.

Proposal Pamphlet: The book or pamphlet pertaining to a specific project, containing proposal forms, special provisions and other information necessary for and pertinent to the preparation of the proposal or bid.

Referred Documents: On all work authorized by the Contracting Agency, any referenced documents in the specification, i.e., Bulletins, Standards, Rules, Methods of Analysis or test. Codes and Specifications of other Agencies, Engineering Societies or Industrial Associations, refer to the Latest Edition thereof, including Amendments, which are in effect and published at the time of Advertising for Bids or the issuing of a permit for the work, unless otherwise stated.

Right-of-way: A general term denoting land, property, or interest therein, usually in a strip acquired for or devoted to a street, highway, or other public improvement.

Road: A general term denoting a public way for purposes of vehicular travel, including the entire area within the right-of-way.

Roadside: A general term denoting the area adjoining the outer edge of the roadway. Extensive areas between the roadways of a divided highway may also be considered roadside.

Roadside Development: Those items necessary to the complete roadway which provide for the preservation of landscape materials and features; the rehabilitation and protection against erosion of all areas disturbed by construction through seeding, sodding, mulching and the placing of other ground covers; such suitable planting and other improvements as may increase the effectiveness and enhance the appearance of the roadway.

Roadway: The portion of the right-of-way intended primarily for vehicular traffic, and including all appurtenant structures and other features necessary for proper drainage and protection. Where curbs exist, it is that portion of roadway between the faces of the curbs.

Sewers: Conduits and related appurtenances employed to collect and carry off water and waste matter to a suitable point of final discharge.

Shop Drawings: Drawings or reproduction of drawings, detailing; fabrication and erection of structural elements, falsework and forming for structures, fabrication of reinforcing steel, installed equipment and installation of systems, or any other supplementary plans or similar data, which the Contractor is required to submit for approval.

Shoulder: The portion of the roadway contiguous with the traveled way for accommodation of stopped vehicles, for emergency use, and for lateral support of base and surface courses.

Sidewalk: That portion of the roadway primarily constructed for the use of pedestrians.

Special Provisions: The special conditions, requirements, additions, and/or revisions to the Standard Specifications, applicable to the work, to cover conditions or requirements peculiar to the project under consideration.

Specifications: The descriptions, directions, provisions, and requirement for performing the work as contained in the Contract Documents.

Springline: The horizontal centerline of a pipe in a pipe trench backfill envelope. The springline separates the haunching area from the initial backfill in the pipe embedment zone.

Standard Details: Uniform detail drawings of structures or devices adopted as Standard Details by the Engineer.

Standard Specifications: Uniform general specifications adopted as Standard Specifications by the Engineer.

Storm Drain: Any conduit and appurtenance intended for the reception and transfer of storm water.

Street: Streets, avenues, alleys, highways, crossings, lanes, intersections, courts, places, and grounds now open or dedicated or hereafter opened or dedicated to public use and public ways.

Structures: Bridges, culverts, catch basins, drop inlets, retaining walls, cribbing, manholes, end walls, sewers, service pipes underdrains foundation drains, fences, swimming pools, and other features which may be encountered in the work and not otherwise classed herein.

Subbase: The lower course of the base of a roadway, immediately above the subgrade.

Subcontractors: Those having direct contracts with the Contractor and those who furnish material worked into a special design according to the Plans and Specifications for the work, but not those who merely furnish material not so worked.

Subgrade: The supporting structures on which the pavement and its special undercourses rest.

Substructure: All of that part of the structure or building below the bearings of simple and continuous spans, skewbacks of arches and tops of footings of rigid frames, together with the backwalls, wingwalls and wing protection railings.

Superintendent: The Contractor's authorized representative in responsible charge of the work.

Superintendent of Streets: The person duly appointed by the Council of the Contracting Agency, as provided by the Arizona Revised Statutes.

Superstructure: The entire structure or building except the substructure.

Supplemental Specifications: Additions and revisions to the Standard Specifications that are adopted subsequent to issuance of the printed book.

Supplementary General Conditions: Requirements, or revisions, to the Standard General Conditions, applicable to the work, and to cover conditions or requirements peculiar to the project under consideration.

Surety: The individual, firm or corporation, bound with and for the Contractor for the acceptable performance, execution, and completion of the work, and for the satisfaction of all obligations incurred.

Surface Course: The finished or wearing course of an asphalt concrete pavement structure.

Title or Headings: The titles or headings of the sections and subsections herein are intended for convenience of reference and shall not be considered as having any bearing on their interpretation.

Township, City, Town or District: A subdivision of the County used to designate or identify the location of the proposed work.

Traveled Way: The portion of the roadway for the movement of vehicles, exclusive of shoulders and auxiliary lanes.

"Underground Facility": means any item which shall be buried or placed below ground for use in connection with the storage or conveyance of water, sewage, electronic, telephone or telegraphic communications, electric energy, oil, gas or other substances, and shall include, but not be limited to pipes, sewers, conduits, cables, valves, lines, wires, manholes, attachments and those portions of poles and their attachments below ground.

Utility: Pipe lines, conduits, ducts, transmission lines, overhead or underground wires, railroads, storm drains, sanitary sewers, irrigation facilities, street lighting, traffic signals, and fire alarm systems, and appurtenances of public utilities and those of private industry, businesses or individuals solely for their own use or use of their customers which are operated or maintained in, on, under, over or across public right-of-way or public or private easement.

Waterworks (Water Supply System): The reservoirs, pipe lines, wells, pumping equipment, purification works, mains, service pipes, and all related appliances and appurtenances utilized in the procurement, transportation and delivery of an adequate, safe, and palatable water supply for the Contracting Agency.

Work: Any or all of the improvements mentioned and authorized to be made, and the construction, demolition, reconstruction, and repair of all or any portion of such improvements, and all labor, services, incidental expenses, and material necessary or incidental thereto.

Working Day: A calendar day, exclusive of Saturdays, Sundays, and Contracting Agency recognized legal holidays, on which weather and other conditions not under the control of the Contractor will permit construction operations to proceed for the major part of the day with the normal working force engaged in performing the controlling item or items of work which would be in progress at that time.

101.3 In order to avoid cumbersome and confusing repetition of expressions in these specifications, it is provided that whenever anything is, or is to be, done, if, as, or, when, or where contemplated required, determined, directed, specified, authorized, ordered, given, designated, indicated, considered necessary, deemed necessary, permitted, reserved, suspended, established, approval, approved, disapproved, acceptable, unacceptable, suitable, accepted, satisfactory, unsatisfactory, sufficient, insufficient, rejected, or condemned, it shall be understood as if the expression were followed by the words by the Engineer or to the Engineer.

- End of Section -

SECTION 601

RIGID PIPE TRENCH EXCAVATION, BACKFILLING AND COMPACTION

601.1 DESCRIPTION:

The work covered by this specification consists of furnishing all plant, labor, equipment, appliances and materials, and performing all operations in connection with the trench excavation, backfilling and compaction of trenches for a single rigid pipe installation in accordance with the plans and special provisions. Pipe materials that are considered to be rigid include reinforced concrete pipe, non-reinforced concrete pipe, cast-in-place concrete pipe, reinforced concrete cylinder pipe, vitrified clay pipe and ductile iron pipe. All other pipe materials are considered flexible pipe. See Section 603 for trench excavation, backfilling, and compaction of flexible pipe.

The Trench Cross-Section Detail shown on Detail 200-2 illustrates the terminology used in this specification.

See Section 615 for sewer line construction procedures.

See Section 618 for storm drain construction procedures.

Excavation for appurtenance structures, such as manholes, inlets, transition structures, junction structures, vaults, valve boxes, catch basins, etc., shall be deemed to be in the category of trench excavation.

See Section 602 for trenchless installations.

601.2 EXCAVATION:

601.2.1 General: The Contractor shall perform all excavation of every description and of whatever substances encountered, to the depths indicated on the plans, and including excavation ordered by the Engineer of compacted backfill for the purpose of making density tests on any portion of the backfill.

All excavation shall be open cut unless otherwise shown on the plans or approved by the Engineer.

601.2.2 Trench Widths: Trenches for other than cast-in-place concrete pipe shall conform to the dimensions in Table 601-1, unless otherwise specified in the special provisions, indicated on the plans, and/or approved by the Engineer.

Table 601-1

Size of Pipe (Nom. Dia.)	Maximum Width At Top Of Pipe Greater Than O.D. Of Bell	Minimum Width At Springline Each Side of Pipe (1)
Less than 18 inches	16 inches	6 inches
18 inches to 24 inches inclusive	19 inches	7.5 inches
27 inches to 39 inches inclusive	22 inches	9 inches
42 inches to 60 inches inclusive	30 inches	12 inches
66 inches to 78 inches inclusive	42 inches	15 inches
84 inches to 96 inches inclusive	50 inches	19 inches
102 inches to 120 inches inclusive	60 inches	24 inches

(1) When the specified compaction cannot be obtained in the haunch area and/or initial backfill zone, the Contractor shall make necessary changes in his methods and/or equipment to obtain the desired results. In some instances, the Minimum Width at Springline shall be adjusted wider to assist the Contractor in obtaining the compaction. The Engineer must be satisfied with the Contractor's compaction effort, concur with the change and approve the revised distance. There shall be no additional cost to the Agency for the extra trench width.

For multiple pipe installations in a single trench, the Engineer shall provide details on the plans or in the Special/Technical Provisions as to the layout, pipe configuration, distances between pipes and trench walls, the type of backfill and bedding materials, etc.

The width of the trench shall not be greater than the maximum indicated in Table 601-1, at and below the level of the top of the pipe. The width of the trench above that level may be made as wide as necessary for sheeting and bracing, and for proper installation of the work.

If the maximum trench width as specified in Table 601-1 is exceeded at the top of the pipe the Contractor shall provide, at no additional cost to the Contracting Agency, the necessary additional load bearing capacity by means of initial backfill, having a higher bedding factor than that specified, higher strength pipe, a concrete cradle, cap or encasement, or by other means approved in writing by the Engineer. Where safety or undermining situations occur, a CLSM backfill may be used as needed.

601.2.3 Trench Grade: Alignment and elevation stakes shall be furnished the Contractor at set intervals and agreed upon offsets. On water main projects, elevation stakes will be furnished only when deemed necessary by the Engineer. In all cases where elevation stakes are furnished, the Engineer will also furnish the Contractor with cut sheets.

For all pipe 12 inches or greater in diameter, the Contractor shall excavate for and provide an initial granular bedding at least 4 inches thick or 1/12 the O.D. of the pipe whichever is greater. This bedding material shall be placed at a uniform density with specified compaction and fine graded as specified below.

Bell or coupling holes shall be dug after the trench bottom has been graded. Such holes shall be of sufficient width to provide ample room for caulking, banding, or bolting. Holes shall be excavated only as necessary to permit accurate work in the making of the joints and to insure that the pipe will rest upon the prepared bottom of the trench, and not be supported by any portion of the joint.

Depressions for joints, other than bell-and-spigot, shall be made in accordance with the recommendations of the joint manufacturer for the particular joint used.

601.2.4 Fine Grading: Unless otherwise specified in the plans and/or special provisions, the bottom of the trench shall be accurately graded to provide uniform bearing and support for each section of the pipe at every point along its entire length, except for portions of the pipe where it is necessary to excavate for bells and for proper sealing of the pipe joints.

601.2.5 Overexcavation: Except at locations where excavation of rock from the bottom of the trench is required, care shall be taken not to excavate below the depth indicated.

Unauthorized excavation below the specified grade line shall be refilled at the Contractor's expense with ABC material compacted to a uniform density of not less than 95 percent of the maximum density as determined by AASHTO T-99 and T-191 or ASTM D6938. When AASHTO T-99, method A or B, and T-191 are used for density determination, ARIZ 227c will be used for rock correction.

Whenever bedrock is encountered in the trench bottom, it shall be overexcavated to a minimum depth of six inches below the O.D. of the pipe. This overexcavation shall be filled with granular material placed with the minimum possible compaction.

Whenever unsuitable soil incapable of supporting the pipe is encountered, the Contractor will notify the Engineer and a field determination will be made as to the depth of overexcavation and the granular fill required.

601.2.6 Excavation for Manholes, Valves, Inlets, Catch Basins and Other Accessories: The Contractor may excavate to place the concrete structure directly against the excavated surface, provided that the faces of the excavation are firm and unyielding and are at all points outside the structure lines shown on the plans. If the native material is such that it will not stand without sloughing or if precast structures are used, the Contractor shall overexcavate to place the structure and this overexcavation shall be backfilled with the same material required for the adjoining pipe line trench and compacted per Table 601-2.

Any unnecessary excavation below the elevation indicated for the foundation of any structure shall be replaced with the same class of concrete specified for the structure or with 1 ½ sack controlled low strength material as specified in Section 728. When the replacement material is structural concrete, the material shall be placed at the same time as the structure. However, when using 1 ½ sack controlled low strength material, placement of the material shall be per Section 604 which will require a time lag between the material and the structural concrete. The placement of the additional material shall be at no cost to the Agency.

601.2.7 Pavement and Concrete Cutting and Removal: Where trenches lie within the Portland cement concrete section of streets, alleys, driveways, or sidewalks, etc., such concrete shall be sawcut to neat, vertical, true lines in such a manner that the adjoining surface will not be damaged. The minimum depth of cut shall be 1 ½ inches or 1/4 of the thickness, whichever is greater.

Asphalt pavement shall be clean-cut, with approved equipment and by approved methods in accordance with the requirements of Section 336.

No ripping or rooting will be permitted outside limits of cuts. Surfacing materials removed shall be hauled from the job site immediately, and will not be permitted in the backfill.

See Detail 200-1 and 200-2 for further requirements.

601.2.8 Grading and Stockpiling: All grading in the vicinity of trench excavation shall be controlled to prevent surface water from flowing into the trenches. Any water accumulated in the trenches shall be removed by pumping or by other approved methods.

During excavation, material suitable for backfilling shall be piled in an orderly manner, a sufficient distance back from the edges of trenches, to avoid overloading and to prevent slides or cave-ins. Material unsuitable for backfilling, or excess material, shall be hauled from the job site and disposed of by the Contractor.

The Contractor shall, prior to commencement of the work, submit a letter to the Contracting Agency stating the location of each disposal site for all excess or unsuitable material and certify that he has obtained the property owner's permission for the disposal of all such materials.

Where the plans and/or special provisions provide for segregation of topsoil from underlying material for purposes of backfill, the material shall not be mixed.

601.2.9 Shoring and Sheeting: The Contractor shall do such trench bracing, sheathing, or shoring necessary to perform and protect the excavation as required for safety and conformance to governing laws. The bracing, sheathing, or shoring shall not be removed in one operation but shall be done in successive stages as determined by the Engineer to prevent overloading of the pipe during backfilling operations. The cost of the bracing, sheathing, or shoring, and the removal of same, shall be included in the unit price for the pipe.

All shoring and sheeting deemed necessary to protect the excavation and to safeguard employees, shall be installed. See Section 107.

601.2.10 Open Trench: Except where otherwise noted in the special provisions, or approved in writing by the Engineer, the maximum length of open trench, where the construction is in any stage of completion (excavation, pipe laying or backfilling), shall not exceed 1320 feet in the aggregate at any one location.

Any excavated area shall be considered open trench until all ABC for pavement replacement has been placed and compacted. With the approval of the Engineer, pipe laying may be carried on at more than one separate location, the restrictions on open trench applying to each location. Trenches across streets shall be completely backfilled as soon as possible after pipe laying.

Substantial steel plates with adequate trench bracing shall be used to bridge across trenches at street crossings where trench backfill and temporary patches have not been completed during regular work hours. Steel plates shall be installed in accordance with Detail 211. Safe and convenient passage for pedestrians shall be provided. The Engineer may designate a passage to be provided at any point he deems necessary. Access to hospitals, fire stations and fire hydrants must be maintained at all times.

601.3 PROTECTION OF EXISTING UTILITIES:

601.3.1 Utilities: Unless otherwise shown on the plans or stated in the specifications, all utilities, either underground or overhead, shall be maintained in continuous service throughout the entire contract period. The Contractor shall be responsible and liable for any damages to or interruption of service caused by the construction.

If the Contractor desires to simplify his operation by temporarily or permanently relocating or shutting down any utility or

appurtenance, he shall make the necessary arrangements and agreements with the owner and shall be completely responsible for all costs concerned with the relocation or shutdown and reconstruction. All property shall be reconstructed in its original or new location as soon as possible and to a condition at least as good as its previous condition. This cycle of relocation or shutdown and reconstruction shall be subject to inspection and approval by both the Engineer and the owner of the utility.

The Contractor shall be entirely responsible for safeguarding and maintaining all conflicting utilities that are shown on the plans (Sections 107 and 105 apply). This includes overhead wires and cables and their supporting poles whether they are inside or outside of the open trench. If, in the course of work, a conflicting utility line that was not shown on the plans is discovered, the Contracting Agency will either negotiate with the owner for relocation, relocate the utility, change the alignment and grade of the trench or as a last resort, declare the conflict as "extra work" to be accomplished by the Contractor in accordance with Section 104.

601.3.2 Irrigation Ditches, Pipes and Structures: The Contractor shall contact the owners of all irrigation facilities, and make arrangements for necessary construction clearances and/or dry-up periods.

All irrigation ditches, dikes, headgates, pipe, valves, checks, etc., damaged or removed by the Contractor, shall be restored to their original condition or better, by the Contractor at no additional cost to the Contracting Agency.

601.3.3 Building, Foundations and Structures: Where trenches are located adjacent to building, foundations, and structures, the Contractor shall take all necessary precaution against damage to them. The Contractor shall be liable for any damage caused by the construction.

Except where authorized in the special provisions or in writing by the Engineer, water settling of backfill material in trenches adjacent to structures will not be permitted.

601.3.4 Permanent Pipe Supports: Permanent pipe supports for the various types and sizes of sewer, water and utility lines shall conform to the Standard Details or the details shown on the plans. Such pipe supports shall be erected at the locations shown on the plans and/or at any other locations as necessary as determined by the Engineer.

601.4 FOUNDATION, BEDDING, HAUNCHING, BACKFILLING AND COMPACTION:

601.4.1 Foundation: The native or prepared material (when required) upon which the bedding material is placed.

601.4.2 Bedding: The material upon which the conduit or structure is to be placed shall be accurately finished to the grade or dimensions shown on the plans or as directed by the Engineer. The bottom portion of the trench shall be brought to grade so that the conduit or structure will be continuously in contact with the material on which it is being placed. If rocky or unsuitable soil is encountered, Subsection 601.2.5 applies.

Unless otherwise specified in the project plans or project specifications, the minimum material type shall be A.B.C. per Section 702.

601.4.3 Haunching: The material placed between the bedding and springline shall be constructed using the specified material and compacted for the full length of the pipe so as to distribute the load-bearing reaction uniformly to the bedding. If placed in lifts, the thickness shall not exceed 2 feet and shall be deposited and compacted to the specified density uniformly on each side of the pipe to prevent lateral displacement of the pipe. Compaction requirements shall be per Section 601.4.6. The moisture content shall be such that the specified compaction can be obtained.

Unless otherwise specified in the project plans or project specifications, the minimum material type shall be A.B.C. per Section 702. With agency approval, native or CLSM may be used as an option.

601.4.4 Initial Backfill: The material placed between the springline to 12 inches above top of pipe (minimum) shall be placed in lifts the height of which shall not exceed 2 feet or that which can be effectively compacted depending on the type of material, type of equipment and methods used. Compaction requirements shall be per Section 601.4.6. The moisture content shall be such that the specified compaction can be obtained.

Unless otherwise specified in the project plans or project specifications, the minimum material type shall be A.B.C. per Section 702. With agency approval, native or CLSM may be used as an option.

Backfill, around utilities that are exposed during trench excavation, shall be placed in accordance with the bedding methods.

601.4.5 Final Backfill: The material placed above the initial backfill shall be placed in lifts the height of which shall not exceed 2 feet or that which can be effectively compacted depending on the type of material, type of equipment and methods used. Compaction requirements shall be per Section 601.4.6. All backfill shall be constructed per Detail 200-1 with the type of replacement noted on the plans or in the special provisions. Unless otherwise noted, backfill under single curb, curb and gutter, sidewalk, driveways, valley gutters, etc. shall be the same as the adjacent street pavement.

601.4.6 Compaction Densities: Unless otherwise provided in the plans and/or special provisions, the trench backfill shall be thoroughly compacted to not less than the densities in Table 601-2 when tested and determined by AASHTO T-99 and T-191 or ASTM D6938. When AASHTO T-99, method A or B, and T-191 are used for density determination, ARIZ-227c will be used for rock correction. All compaction discussed within this section shall be performed within 2 percentage points of optimum moisture content unless otherwise noted in the project plans or project specifications.

The density required will depend on the Type shown on the plans and/or called for in the special provisions. Density required for each type shall comply with Table 601-2.

TABLE 601-2

MINIMUM TRENCH COMPACTION DENSITIES

Backfill Type	Location	From Surface To 2 feet Below Surface	From 2 feet Below Surface To 1 foot Above Top of Pipe	From 1 foot Above Top of Pipe to Bottom of Pipe
I	Under any existing or proposed pavement, curb, gutter, attached sidewalk, roadway shoulders, and other areas within right-of-way subject to vehicular traffic, or when any part of the trench excavation is within 2-feet of the existing pavement, curb, or gutter.	100% for granular 95% for non-granular	95%	95%
II	On any utility easement or right-of-way outside limits of Type I backfill.	95%	95%	95%
III	Around any structures (manholes, etc.) or exposed utilities.	95% for A.B.C., 100% for native or CLSM		

Note: The type required will generally be shown on the plans and the plans will govern. Where no type is shown on the plans, the type shall comply with Table 601-2.

A consideration in determining the backfill Types as shown on the plans, is based on the trench widths as shown in the Contract Documents. If these trench widths increase beyond those widths referred to above and fall within the 2-foot limit of paved surfaces and other improvements due to construction exigencies, the backfill designation for that portion within the 2-foot limit of such improvements shall be Type I even though Type II backfill is shown on the plans.

601.4.7 Compaction Methods: Unless otherwise specified in the plans and/or special provisions, the backfill material shall be uniformly compacted using mechanical work methods. When allowed by the agency, consolidation by jetting is also an acceptable compaction method; however, testing requirements shall be increased (100% increase per lift). Care will be taken to prevent damage to or movement of the conduit by the compaction method or equipment used.

Water consolidation by jetting shall be accomplished with a 1 ½ inches pipe of sufficient length to reach the bottom of the lift being settled with adequate hose attached and a water pressure of not less than 30 psi. All jetting shall be accomplished transversely across the trench at intervals of not more than 6 feet with the jetting locations on one side of the trench offset to the jetting locations on the other side of the trench. The entire lift shall be leveled and completely saturated working from the top to the bottom.

When jetting is used within the haunching and initial backfill zones, the Contractor shall be entirely responsible for establishing each lift depth so as to avoid floating the conduit being placed and shall make any repair or replacement at no cost to the Contracting Agency. However, for conduit larger than 24 inches I.D. the first lift shall not exceed the springline of

the conduit and subsequent lifts shall not exceed 3 feet.

Flooding is not acceptable as a water consolidation method unless authorized in the specification or by a written change order. It will consist of the inundation of the entire lift with water and then puddle with poles or bars to insure saturation of the entire lift.

Where jetting or flooding is utilized and the surrounding material is such that it does not permit proper drainage, the Contractor shall provide, at his expense a sump and a pump at the downstream end to remove the accumulated water.

The use of water consolidation does not relieve the Contractor from the responsibility to make his own determination that such methods will not result in damage to existing improvements. The Contractor shall be responsible for any damage incurred.

If water consolidation is not successful, mechanical compaction methods shall be used to meet the compaction requirements. Backfill material may need to be removed and replaced.

Where Type I backfill is required, water consolidation shall only be permitted when the material in which the trench is located and the backfill are both granular material. No exception shall be made for construction within new developments.

601.4.8 Specifications for Granular Material: For purposes of this specification, granular material shall mean material for which the sum of the plasticity index and the percent of the material passing a No. 200 sieve shall not exceed 23. The plasticity index shall be tested in accordance with AASHTO T-146 Method A (Wet Preparation), T-89 and T-90.

601.4.9 Rights-Of-Way Belonging to Others: Backfill and compaction for irrigation lines of the Salt River Valley Water Users' Association and Roosevelt Irrigation Districts and for trenches in State of Arizona and Maricopa County right-of-way outside the limits of the Contracting Agency shall be accomplished in accordance with their permit and/or specifications.

601.4.10 Test Holes: Boring logs shown on the plans do not constitute a part of the contract and are included for the Contractor's convenience only. It is not intended to imply that the character of the material is the same as that shown on the logs at any point other than that where the boring was made. The Contractor shall satisfy himself regarding the character and amount of rock, gravel, sand, silt, clay and water to be encountered in the work to be performed.

601.4.10 Bedding and Backfilling for Electronic, Telephonic, Telegraphic, Electrical, Oil and Gas Lines: The bedding and backfill for these underground facilities shall be native material or sand which conforms to the grading requirement of ASTM C33 for fine aggregate. When backfill material consists of aggregate base course, crushed stone, or other material containing stones, only sand will be used for foundation, and bedding. The bedding depth shall be six inches and backfill depth shall be one foot above the top of the facility. Compaction will be in accordance with Section 601.

601.5 CONTRACTOR CERTIFICATION OF INSTALLATION PROCEDURES:

When requested in the Special Provisions or by the Engineer prior to installation, the Contractor shall furnish to the Contracting Agency an affidavit (certification) from the pipe manufacturer (or his designee) stating that the Contractor is familiar with the manufacturer’s suggested installation methods and procedures and the installation complies with those procedures and is consistent with MAG requirements.

Also, when required in the Special/Technical Provisions or requested by the Engineer, the pipe manufacturer or his designee will review the Contractor’s methods and procedures for pipe installation in the field. The Contractor will make any adjustments in the installation as recommended by the manufacturer or his representative. If necessary, the Contractor may be required to reinstall or provide corrections to pipe installed prior to the field review at no cost to the Agency. Once the manufacturer or his representative has reviewed the Contractor’s installation methods and the Contractor has adjusted his installation methods as recommended by the same, the manufacturer or his representative shall furnish to the Contracting Agency an affidavit (certification) that the Contractor’s installation methods and procedures, at the time of the review, complied with the manufacturer’s installation practices. The affidavit must provide the name of the manufacturer’s representative witnessing the pipe installation.

601.6 PAVEMENT REPLACEMENT AND SURFACE RESTORATION:

601.6.1 Grading: The Contractor shall do such grading in the area adjacent to backfilled trenches and structures as may be necessary to leave the area in a neat and satisfactory condition approved by the Engineer.

601.6.2 Restoring Surface: All streets, alleys, driveways, sidewalks, curbs, or other surfaces, in which the surface is broken into or damaged by the installation of the new work, shall be resurfaced in kind or as specified to the satisfaction of the Engineer in accordance with Section 336.

601.6.3 Cleanup: The job site shall be left in a neat and acceptable condition. Excess soil, concrete, etc., shall be removed from the premises.

601.6.4 Temporary Pavement: The Contractor shall install temporary asphalt pavement or the first course of permanent pavement replacement in accordance with Section 336 immediately following backfilling and compaction of trenches that have been cut through existing pavement. Except as otherwise provided in Section 336, this preliminary pavement shall be maintained in a safe and reasonably smooth condition until required backfill compaction is obtained and final pavement replacement is ordered by the Engineer. Temporary paving removed shall be hauled from the job site and disposed of by the Contractor at no additional cost to the Contracting Agency.

601.7 PAYMENT:

No pay item will be included in the proposal, nor direct payment made for trench excavation, backfilling, compaction, or placement of temporary pavement. The cost of these features of the work shall be included in the unit price per linear foot for furnishing and laying pipe.

- End of Section -

SECTION 603

FLEXIBLE PIPE TRENCH EXCAVATION, BACKFILLING AND COMPACTION

603.1 DESCRIPTION:

The work covered by this specification consists of furnishing all plant, labor, equipment, appliances and materials, and performing all operations in connection with the trench excavation, backfilling and compaction for a single flexible pipe installation in accordance with the plans and special provisions. Pipe materials that are considered to be flexible include thermoplastic pipes and corrugated metal pipe and arches. See Section 601 for rigid pipe trench excavation, backfilling and compaction.

For the purpose of this specification, flexible pipe shall include 8 inches through 120 inches nominal diameter.

The Trench Cross-Section Detail shown on Detail 200-2 illustrates the terminology used in this specification.

See Section 615 for sewer line construction procedures.

See Section 618 for storm drain construction procedures.

HDPE pipe and fittings shall conform to Section 738. SRPE pipe and fittings shall conform to Section 739. Polypropylene pipe and fittings shall conform to Section 740. PVC pipe and fittings shall conform to Section 745. Corrugated metal pipe and arches shall conform to Section 760.

Excavation for appurtenance structures, such as manholes, inlets, transition structures, junction structures, vaults, valve boxes, catch basins, etc., shall be deemed to be in the category of trench excavation.

See Section 602 for trenchless installations.

603.2 EXCAVATION:

601.2.1 General: The Contractor shall perform all excavation of every description and of whatever substances encountered, to the depths indicated on the plans, and including excavation ordered by the Engineer of compacted backfill for the purpose of making density tests on any portion of the backfill.

All excavation shall be open cut unless otherwise shown on the plans or approved by the Engineer.

603.2.2 Trench Widths: Trenches for flexible pipe shall conform to the dimensions in Table 603-1, unless otherwise specified in the special provisions, indicated on the plans, and/or approved by the Engineer.

Table 603-1

FLEXIBLE PIPE – TRENCH WIDTHS

Size of Pipe (Nom. Dia.)	Maximum Width At Top Of Pipe Greater Than O.D. Of Barrel	Minimum Width At Springline Each Side of Pipe (1)
Less than 18 inches	20 inches	8 inches
18 inches to 24 inches inclusive	23 inches	9.5 inches
27 inches to 36 inches inclusive	28 inches	12 inches
42 inches to 60 inches inclusive	34 inches	14 inches
66 inches to 78 inches inclusive	44 inches	16 inches
84 inches to 96 inches inclusive	48 inches	18 inches
102 inches to 120 inches inclusive	54 inches	21 inches

(1) When the specified compaction cannot be obtained in the haunch area and/or initial backfill zone, the Contractor shall make necessary changes in his methods and/or equipment to obtain the desired results. In some instances, the Minimum Width at springline shall be adjusted wider to assist the Contractor in obtaining the

compaction. The Engineer must be satisfied with the Contractor's compaction effort, concur with the change and approve the revised distance. There shall be no additional cost to the Agency for the extra trench width.

For multiple pipe installations in a single trench, the Engineer shall provide details on the plans or in the Special/Technical Provisions as to the layout, pipe configuration, distances between pipes and trench walls, the type of backfill and bedding materials, etc.

The width of the trench shall not be greater than the maximum indicated in Table 603-1, at and below the level of the top of the pipe. The width of the trench above that level may be made as wide as necessary for sheeting and bracing, and for proper installation of the work.

If the maximum trench width as specified in Table 603-1 is exceeded at the top of the pipe the Contractor shall provide, at no additional cost to the Contracting Agency, the necessary additional load bearing capacity by means of initial backfill, having a higher bedding factor than that specified, higher strength pipe, a concrete cradle, cap or encasement, or by other means approved in writing by the Engineer. Where safety or undermining situations occur, a CLSM backfill may be used as needed.

603.2.3 Trench Grade: Alignment and elevation stakes shall be furnished the Contractor at set intervals and agreed upon offsets. On water main projects, elevation stakes will be furnished only when deemed necessary by the Engineer. In all cases where elevation stakes are furnished, the Engineer will also furnish the Contractor with cut sheets.

For all pipe 12 inches or greater in diameter, the Contractor shall excavate for and provide an initial granular bedding at least 4 inches thick or 1/12 the O.D. of the pipe whichever is greater. This bedding material shall be placed at a uniform density with specified compaction and fine graded as specified below.

Bell or coupling holes shall be dug after the trench bottom has been graded. Such holes shall be of sufficient width to provide ample room for caulking, banding, or bolting. Holes shall be excavated only as necessary to permit accurate work in the making of the joints and to insure that the pipe will rest upon the prepared bottom of the trench, and not be supported by any portion of the joint.

Depressions for joints, other than bell-and-spigot, shall be made in accordance with the recommendations of the joint manufacturer for the particular joint used.

603.2.4 Fine Grading: Unless otherwise specified in the plans and/or special provisions, the bottom of the trench shall be accurately graded to provide uniform bearing and support for each section of the pipe at every point along its entire length, except for portions of the pipe where it is necessary to excavate for bells and for proper sealing of the pipe joints.

603.2.5 Overexcavation: Except at locations where excavation of rock from the bottom of the trench is required, care shall be taken not to excavate below the depth indicated.

Unauthorized excavation below the specified grade line shall be refilled at the Contractor's expense with ABC material compacted to a uniform density of not less than 95 percent of the maximum density as determined by AASHTO T-99 and T-191 or ASTM D6938. When AASHTO T-99, method A or B, and T-191 are used for density determination, ARIZ 227c will be used for rock correction.

Whenever bedrock is encountered in the trench bottom, it shall be overexcavated to a minimum depth of six inches below the O.D. of the pipe. This overexcavation shall be filled with granular material placed with the minimum possible compaction.

Whenever unsuitable soil incapable of supporting the pipe is encountered, the Contractor will notify the Engineer and a field determination will be made as to the depth of overexcavation and the granular fill required.

603.2.6 Excavation for Manholes, Valves, Inlets, Catch Basins and Other Accessories: The Contractor may excavate to place the concrete structure directly against the excavated surface, provided that the faces of the excavation are firm and unyielding and are at all points outside the structure lines shown on the plans. If the native material is such that it will not stand without sloughing or if precast structures are used, the Contractor shall overexcavate to place the structure and this overexcavation shall be backfilled with the same material required for the adjoining pipe line trench and compacted per Table 603-2.

Any unnecessary excavation below the elevation indicated for the foundation of any structure shall be replaced with the same class of concrete specified for the structure or with 1 ½ sack controlled low strength material as specified in Section 728. When the replacement material is structural concrete, the material shall be placed at the same time as the structure. However, when using 1 ½ sack controlled low strength material, placement of the material shall be per Section 604 which will require a time lag between the material and the structural concrete. The placement of the additional material shall be at no cost to the Agency.

603.2.7 Pavement and Concrete Cutting and Removal: Where trenches lie within the Portland cement concrete section of streets, alleys, driveways, or sidewalks, etc., such concrete shall be sawcut to neat, vertical, true lines in such a manner that the adjoining surface will not be damaged. The minimum depth of cut shall be 1 ½ inches or 1/4 of the thickness, whichever is greater.

Asphalt pavement shall be clean-cut, with approved equipment and by approved methods in accordance with the requirements of Section 336.

No ripping or rooting will be permitted outside limits of cuts. Surfacing materials removed shall be hauled from the job site immediately, and will not be permitted in the backfill.

See Detail 200-1 and 200-2 for further requirements.

603.2.8 Grading and Stockpiling: All grading in the vicinity of trench excavation shall be controlled to prevent surface water from flowing into the trenches. Any water accumulated in the trenches shall be removed by pumping or by other approved methods.

During excavation, material suitable for backfilling shall be piled in an orderly manner, a sufficient distance back from the edges of trenches, to avoid overloading and to prevent slides or cave-ins. Material unsuitable for backfilling, or excess material, shall be hauled from the job site and disposed of by the Contractor.

The Contractor shall, prior to commencement of the work, submit a letter to the Contracting Agency stating the location of each disposal site for all excess or unsuitable material and certify that he has obtained the property owner's permission for the disposal of all such materials.

Where the plans and/or special provisions provide for segregation of topsoil from underlying material for purposes of backfill, the material shall not be mixed.

603.2.9 Shoring and Sheeting: The Contractor shall do such trench bracing, sheathing, or shoring necessary to perform and protect the excavation as required for safety and conformance to governing laws. The bracing, sheathing, or shoring shall not be removed in one operation but shall be done in successive stages as determined by the Engineer to prevent overloading of the pipe during backfilling operations. The cost of the bracing, sheathing, or shoring, and the removal of same, shall be included in the unit price for the pipe.

All shoring and sheeting deemed necessary to protect the excavation and to safeguard employees, shall be installed. See Section 107.

603.2.10 Open Trench: Except where otherwise noted in the special provisions, or approved in writing by the Engineer, the maximum length of open trench, where the construction is in any stage of completion (excavation, pipe laying or backfilling), shall not exceed 1320 feet in the aggregate at any one location.

Any excavated area shall be considered open trench until all ABC for pavement replacement has been placed and compacted. With the approval of the Engineer, pipe laying may be carried on at more than one separate location, the restrictions on open trench applying to each location. Trenches across streets shall be completely backfilled as soon as possible after pipe laying.

Substantial steel plates with adequate trench bracing shall be used to bridge across trenches at street crossings where trench backfill and temporary patches have not been completed during regular work hours. Steel plates shall be installed in accordance with Detail 211. Safe and convenient passage for pedestrians shall be provided. The Engineer may designate a passage to be provided at any point he deems necessary. Access to hospitals, fire stations and fire hydrants must be maintained at all times.

603.3 PROTECTION OF EXISTING UTILITIES:

603.3.1 Utilities: Unless otherwise shown on the plans or stated in the specifications, all utilities, either underground or overhead, shall be maintained in continuous service throughout the entire contract period. The Contractor shall be responsible and liable for any damages to or interruption of service caused by the construction.

If the Contractor desires to simplify his operation by temporarily or permanently relocating or shutting down any utility or appurtenance, he shall make the necessary arrangements and agreements with the owner and shall be completely responsible for all costs concerned with the relocation or shutdown and reconstruction. All property shall be reconstructed in its original or new location as soon as possible and to a condition at least as good as its previous condition. This cycle of relocation or shutdown and reconstruction shall be subject to inspection and approval by both the Engineer and the owner of the utility.

The Contractor shall be entirely responsible for safeguarding and maintaining all conflicting utilities that are shown on the plans (Sections 107 and 105 apply). This includes overhead wires and cables and their supporting poles whether they are inside or outside of the open trench. If, in the course of work, a conflicting utility line that was not shown on the plans is discovered, the Contracting Agency will either negotiate with the owner for relocation, relocate the utility, change the alignment and grade of the trench or as a last resort, declare the conflict as "extra work" to be accomplished by the Contractor in accordance with Section 104.

603.3.2 Irrigation Ditches, Pipes and Structures: The Contractor shall contact the owners of all irrigation facilities, and make arrangements for necessary construction clearances and/or dry-up periods.

All irrigation ditches, dikes, headgates, pipe, valves, checks, etc., damaged or removed by the Contractor, shall be restored to their original condition or better, by the Contractor at no additional cost to the Contracting Agency.

603.3.3 Building, Foundations and Structures: Where trenches are located adjacent to building, foundations, and structures, the Contractor shall take all necessary precaution against damage to them. The Contractor shall be liable for any damage caused by the construction.

Except where authorized in the special provisions or in writing by the Engineer, water settling of backfill material in trenches adjacent to structures will not be permitted.

603.3.4 Permanent Pipe Supports: Permanent pipe supports for the various types and sizes of sewer, water and utility lines shall conform to the Standard Details or the details shown on the plans. Such pipe supports shall be erected at the locations shown on the plans and/or at any other locations as necessary as determined by the Engineer.

603.4 FOUNDATION, BEDDING, HAUNCHING, BACKFILLING AND COMPACTION:

603.4.1 Foundation: The native or prepared material (when required) upon which the bedding material is placed.

603.4.2 Bedding: The material upon which the conduit or structure is to be placed shall be accurately finished to the grade or dimensions shown on the plans or as directed by the Engineer. The bottom portion of the trench shall be brought to grade so that the conduit or structure will be continuously in contact with the material on which it is being placed. If rocky or unsuitable soil is encountered, Subsection 603.2.5 applies.
Unless otherwise specified in the project plans or project specifications, the minimum material type shall be A.B.C. per Section 702.

603.4.3 Haunching: The material placed between the bedding and springline shall be constructed using the specified material and compacted for the full length of the pipe so as to distribute the load-bearing reaction uniformly to the bedding. If placed in lifts, the thickness shall not exceed 1 foot and shall be deposited and compacted to the specified density uniformly on each side of the pipe to prevent lateral displacement of the pipe. Compaction requirements shall be per Section 603.4.6. The moisture content shall be such that the specified compaction can be obtained.

Unless otherwise specified in the project plans or project specifications, the minimum material type shall be A.B.C. per Section 702. With agency approval, native or CLSM may be used as an option.

603.4.4 Initial Backfill: The material placed between the springline to 12 inches above top of pipe (minimum) shall be

placed in lifts the height of which shall not exceed 1 foot or that which can be effectively compacted depending on the type of material, type of equipment and methods used. Extreme care will be taken to prevent damage to or movement of the conduit by the compaction equipment. Compaction requirements shall be per Section 603.4.6. The moisture content shall be such that the specified compaction can be obtained.

Unless otherwise specified in the project plans or project specifications, the minimum material type shall be A.B.C. per Section 702. With agency approval, native or CLSM may be used as an option.

Backfill, around utilities that are exposed during trench excavation, shall be placed in accordance with the bedding methods.

603.4.5 Final Backfill: The material placed above the initial backfill shall be placed in lifts the height of which shall not exceed 2 feet or that which can be effectively compacted depending on the type of material, type of equipment and methods used. Compaction requirements shall be per Section 601.4.6. All backfill shall be constructed per Detail 200-1 with the type of replacement noted on the plans or in the special provisions. Unless otherwise noted, backfill under single curb, curb and gutter, sidewalk, driveways, valley gutters, etc. shall be the same as the adjacent street pavement.

603.4.6 Compaction Densities: Unless otherwise provided in the plans and/or special provisions, the trench backfill shall be thoroughly compacted to not less than the densities in Table 603-2 when tested and determined by AASHTO T-99 and T-191 or ASTM D6938. When AASHTO T-99, method A or B, and T-191 are used for density determination, ARIZ-227c will be used for rock correction. All compaction discussed within this section shall be performed within 2 percentage points of optimum moisture content unless otherwise noted in the project plans or project specifications.

The density required will depend on the Type shown on the plans and/or called for in the special provisions. Density required for each type shall comply with Table 603-2.

TABLE 603-2

MINIMUM TRENCH COMPACTION DENSITIES

Backfill Type	Location	From Surface To 2 feet Below Surface	From 2 feet Below Surface To 1 foot Above Top of Pipe	From 1 foot Above Top of Pipe to Bottom of Pipe
I	Under any existing or proposed pavement, curb, gutter, attached sidewalk, roadway shoulders, and other areas within right-of-way subject to vehicular traffic, or when any part of the trench excavation is within 2-feet of the existing pavement, curb, or gutter.	100% for granular 95% for non-granular	95%	95%
II	On any utility easement or right-of-way outside limits of Type I backfill.	95%	95%	95%
III	Around any structures (manholes, etc.) or exposed utilities.	95% for A.B.C., 100% for native or CLSM		

Note: The type required will generally be shown on the plans and the plans will govern. Where no type is shown on the plans, the type shall comply with Table 603-2.

A consideration in determining the backfill Types as shown on the plans, is based on the trench widths as shown in the Contract Documents. If these trench widths increase beyond those widths referred to above and fall within the 2-foot limit of paved surfaces and other improvements due to construction exigencies, the backfill designation for that portion within the 2-foot limit of such improvements shall be Type I even though Type II backfill is shown on the plans.

603.4.7 Compaction Methods: Unless otherwise specified in the plans and/or special provisions, the backfill material shall be uniformly compacted using mechanical work methods. When allowed by the agency, consolidation by jetting is also an acceptable compaction method; however, testing requirements shall be increased (100% increase per lift). Care will be taken to prevent damage to or movement of the conduit by the compaction method or equipment used.

Water consolidation by jetting shall be accomplished with a 1 ½ inches pipe of sufficient length to reach the bottom of the lift

being settled with adequate hose attached and a water pressure of not less than 30 psi. All jetting shall be accomplished transversely across the trench at intervals of not more than 6 feet with the jetting locations on one side of the trench offset to the jetting locations on the other side of the trench. The entire lift shall be leveled and completely saturated working from the top to the bottom.

When jetting is used within the haunching and initial backfill zones, the Contractor shall be entirely responsible for establishing each lift depth so as to avoid floating the conduit being placed and shall make any repair or replacement at no cost to the Contracting Agency. However, for conduit larger than 24 inches I.D. the first lift shall not exceed the springline of the conduit and subsequent lifts shall not exceed 3 feet.

Flooding is not acceptable as a water consolidation method unless authorized in the specification or by a written change order. It will consist of the inundation of the entire lift with water and then puddle with poles or bars to insure saturation of the entire lift.

Where jetting or flooding is utilized and the surrounding material is such that it does not permit proper drainage, the Contractor shall provide, at his expense a sump and a pump at the downstream end to remove the accumulated water.

The use of water consolidation does not relieve the Contractor from the responsibility to make his own determination that such methods will not result in damage to existing improvements. The Contractor shall be responsible for any damage incurred.

If water consolidation is not successful, mechanical compaction methods shall be used to meet the compaction requirements. Backfill material may need to be removed and replaced. No exception shall be made for construction within new developments.

Where Type I backfill is required, water consolidation shall only be permitted when the material in which the trench is located and the backfill are both granular material.

603.4.8 Specifications for Granular Material: For purposes of this specification, granular material shall mean material for which the sum of the plasticity index and the percent of the material passing a No. 200 sieve shall not exceed 23. The plasticity index shall be tested in accordance with AASHTO T-146 Method A (Wet Preparation), T-89 and T-90.

603.4.9 Rights-Of-Way Belonging to Others: Backfill and compaction for irrigation lines of the Salt River Valley Water Users' Association and Roosevelt Irrigation Districts and for trenches in State of Arizona and Maricopa County right-of-way outside the limits of the Contracting Agency shall be accomplished in accordance with their permit and/or specifications.

603.4.10 Test Holes: Boring logs shown on the plans do not constitute a part of the contract and are included for the Contractor's convenience only. It is not intended to imply that the character of the material is the same as that shown on the logs at any point other than that where the boring was made. The Contractor shall satisfy himself regarding the character and amount of rock, gravel, sand, silt, clay and water to be encountered in the work to be performed.

603.4.11 Bedding and Backfilling for Electronic, Telephonic, Telegraphic, Electrical, Oil and Gas Lines: The bedding and backfill for these underground facilities shall be native material or sand which conforms to the grading requirement of ASTM C33 for fine aggregate. When backfill material consists of aggregate base course, crushed stone, or other material containing stones, only sand will be used for foundation, and bedding. The bedding depth shall be six inches and backfill depth shall be one foot above the top of the facility. Compaction will be in accordance with Section 603.

603.5 CONTRACTOR CERTIFICATION OF INSTALLATION PROCEDURES:

When requested in the Special Provisions or by the Engineer prior to installation, the Contractor shall furnish to the Contracting Agency an affidavit (certification) from the pipe manufacturer (or his designee) stating that the Contractor is familiar with the manufacturer's suggested installation methods and procedures and the installation complies with those procedures and is consistent with MAG requirements.

Also, when required in the Special/Technical Provisions or requested by the Engineer, the pipe manufacturer or his designee will review the Contractor's methods and procedures for pipe installation in the field. The Contractor will make any adjustments in the installation as recommended by the manufacturer or his representative. If necessary, the Contractor may be required to reinstall or provide corrections to pipe installed prior to the field review at no cost to the Agency. Once the

manufacturer or his representative has reviewed the Contractor's installation methods and the Contractor has adjusted his installation methods as recommended by the same, the manufacturer or his representative shall furnish to the Contracting Agency an affidavit (certification) that the Contractor's installation methods and procedures, at the time of the review, complied with the manufacturer's installation practices. The affidavit must provide the name of the manufacturer's representative witnessing the pipe installation.

603.6 PAVEMENT REPLACEMENT AND SURFACE RESTORATION:

603.6.1 Grading: The Contractor shall do such grading in the area adjacent to backfilled trenches and structures as may be necessary to leave the area in a neat and satisfactory condition approved by the Engineer.

603.6.2 Restoring Surface: All streets, alleys, driveways, sidewalks, curbs, or other surfaces, in which the surface is broken into or damaged by the installation of the new work, shall be resurfaced in kind or as specified to the satisfaction of the Engineer in accordance with Section 336.

603.6.3 Cleanup: The job site shall be left in a neat and acceptable condition. Excess soil, concrete, etc., shall be removed from the premises.

603.6.4 Temporary Pavement: The Contractor shall install temporary asphalt pavement or the first course of permanent pavement replacement in accordance with Section 336 immediately following backfilling and compaction of trenches that have been cut through existing pavement. Except as otherwise provided in Section 336, this preliminary pavement shall be maintained in a safe and reasonably smooth condition until required backfill compaction is obtained and final pavement replacement is ordered by the Engineer. Temporary paving removed shall be hauled from the job site and disposed of by the Contractor at no additional cost to the Contracting Agency.

603.7 PAYMENT:

No pay item will be included in the proposal, nor direct payment made for trench excavation, backfilling, compaction, or placement of temporary pavement. The cost of these features of the work shall be included in the unit price per linear foot for furnishing and laying pipe.

- End of Section -

SECTION 615

SEWER LINE CONSTRUCTION

615.1 DESCRIPTION:

The construction or extension of sewer lines shall conform to the applicable standard specifications and details, except as otherwise required on the plans or as modified in the special provisions.

615.2 MATERIALS:

Pipe used for sewer line construction, including specials, joints, and gaskets, shall be according to the following Sections, or as modified by the special provisions.

- Reinforced Concrete Pipe (RCP), see Section 735
- High Density Polyethylene (HDPE) Pipe, see Section 738
- Steel Reinforced Polyethylene (SRPE) Pipe, see Section 739
- Polypropylene Pipe, see Section 740
- Vitrified Clay Pipe (VCP), see Section 743
- Polyvinylchloride (PVC) Pipe, see Section 745

615.3 TRENCHING:

Trench excavation shall be accomplished in accordance with Sections 601 for rigid pipe and 603 for flexible pipe, except as specified below, or as modified by special provisions.
The Engineer shall furnish the Contractor alignment and elevation stakes at agreed-upon intervals and offset together with cut sheets showing the difference in elevation from the top of the stakes to the flow line of the pipe.

The trench shall be dry when the fine grading of the bottom of the trench is accomplished. Before placement of pipe the fine grade shall be carefully checked by use of a string line, laser beam, or other means so that when in final position the pipe will be true to line and grade, ±0.05 feet for 8 inches through 12 inches, ±0.10 feet for 15 inches and larger.

615.4 SEPARATION:

To protect water lines from contamination by sewer lines, separation and extra protection shall be in accordance with Section 610.

Sewer lines that are constructed of ductile iron pipe for extra protection shall be internally lined for sewer service.

615.5 LAYING PIPE:

Pipe shall be of the type, class, and size called for on the plans. All pipe shall be protected during handling against impact shocks and free falls. No damaged or defective pipe shall be installed in the work. Pipe shall be kept clean at all times, and as the work progresses, the interior of the pipe shall be cleared of all dirt and superfluous materials of every description.

The laying of the pipe shall be in finished trenches free from water or debris, and shall be commenced at the lowest point, with the spigot ends pointing in the direction of the flow. Each pipe shall be laid firmly and true to line and grade, in such manner as to form a close concentric joint with the adjoining pipe and to prevent sudden offsets of the flowline. Any adjustment to line and grade shall be made by scraping away or filling in under the body of the pipe, never by wedging or blocking under the pipe ends.

The alignment and grade of each length of pipe shall be checked after setting by measurement from the string line, laser beam target or other means approved by the Engineer.

At all times when work is not in progress, open ends of the pipe and fittings shall be securely closed to the satisfaction of the Engineer, so that no water, earth or other substance will enter the pipe or fittings.

615.6 FITTINGS:

All fittings shall conform to the requirements of the pipe specifications and shall be located as shown on the plans, or as directed by the Engineer, in accordance with the standard details.

615.7 JOINTING:

615.7.1 Rubber Gasket Joints: Prior to making pipe joints, all surfaces of the portions of the pipes to be joined shall be cleaned, dried, and prepared in accordance with the manufacturer's recommendations. The joints shall then be carefully centered and completed.

Trenches shall be kept water-free during the installation of joints and couplings.

The joint and coupling materials will be as specified in the appropriate pipe sections and shall be installed in accordance with the manufacturer's recommendations. Cement mortar joints will NOT be permitted in sanitary sewer construction.

615.7.2 Water Stops: Water stops will be required when connecting PVC or HDPE pipe to concrete structures, manholes, etc. The water stop shall comply with Section 738 and will be installed per manufacturer recommendations.

615.8 SANITARY SEWER SERVICE TAPS:

When the construction of sanitary sewer service taps are called for in the special provisions, they shall be constructed in accordance with standard details for sewer taps except for HDPE pipe.

To maintain structural integrity of the pipe, service taps for HDPE pipe shall be constructed in accordance with the manufacturer's recommendations.

When any damage occurs to the pipe ribs or walls, outside of the tap area, the Contractor shall perform repairs, as recommended by the manufacturer at no cost to the Contracting Agency. Damage to the pipe will include but not be limited to gouging, marring, and scratching forming a clear depression in the pipe.

The locations of the service tap for each property shall be in the downstream ⅓ of the lot, or as requested by the property owner. Sewer service taps shall not be covered until they have been plugged and marked in accordance with standard details and their location has been recorded by the Engineer. Electronic markers shall be placed at no greater depth than electronic locating devices can locate them (typically 2'-4').

615.9 SANITARY SEWER CLEANOUTS:

The cleanouts shall be constructed at locations shown on the plans, in accordance with the standard details for cleanouts.

615.10 MANHOLES:

Manholes shall be constructed to conform with the requirements of Sections 625, Section 505 and standard details.

615.11 BACKFILLING:

Backfilling, and compaction shall be accomplished in accordance with Sections 601 for rigid pipe and 603 for flexible pipe, except as specified below, or as modified by special provisions.

615.12 JACKING PIPE:

Pipe jacking shall be in accordance with Section 602 or Section 607.

615.13 INSPECTION AND TESTING:

Testing and inspection shall be in accordance with Section 611.

615.14 PAVEMENT AND SURFACING REPLACEMENT:

Pavement and surfacing replacement shall be done in accordance with Section 336.

615.15 CLEANUP:

The Engineer has the right to close down forward trenching and pipe laying where testing, backfill, compaction and cleanup does not follow in an orderly manner.

615.16 MEASUREMENT AND PAYMENT:

(A) Sewer Pipe and Fittings:

Measurement will be made horizontally through manholes and fittings and from centerline to centerline of structures, for the various types and sizes of pipe called for on the plans and in the proposal.

Payment for the various sizes and types of pipe will be made at the unit price bid per linear foot, and shall be compensation in full for furnishing and installing the pipe and fittings complete in place, as specified, including excavation, removal of obstructions, backfilling, water settling, compaction, sheeting and bracing, testing, and all incidental work not specifically covered in other pay items.

(B) Sanitary Sewer Service Taps:

Measurement will be the number of taps installed.

Payment will be made at the unit price bid and shall be compensation in full for furnishing and installing pipe and fittings complete in place, as specified and called for on the plans and standard details, including all cost of excavation, removal of obstructions, shoring and bracing, backfilling, compaction, pavement replacement, maintenance of traffic, and all work incidental thereto.

(C) Sanitary Sewer Cleanouts:

Measurement will be the number of cleanouts installed.

Payment will be made at the unit price bid and shall be compensation in full for furnishing and installing pipe, fittings, and frame and cover as called for on the plans and in accordance with the standard details.

- End of Section -

SECTION 618

STORM DRAIN CONSTRUCTION

618.1 DESCRIPTION:

This section covers rigid and flexible pipe line construction used for the conveyance of irrigation water and storm drainage in streets, easements, and alley right of ways, under low hydrostatic heads.

Installation of pipe in laterals of Salt River Valley Water Users' Association or other irrigation districts shall conform to the specifications and permit of the respective irrigation district.

Installation of pipe in State Highways shall conform to the specifications and permit of the Arizona Department of Transportation.

Installation of pipe under railways shall conform to the specifications and permit of the respective railway agency.

618.2 MATERIALS:

Pipe used for storm drain construction, including specials, joints, and gaskets, shall be according to the following Sections, or as modified by special provisions.

- Cast-in-Place Concrete Pipe, see Section 620
- Reinforced Concrete Pipe (RCP), see Section 735
- Non-Reinforced Concrete Pipe, see Section 736
- High Density Polyethylene (HDPE), see Section 738
- Steel Reinforced Polyethylene (SRPE) Pipe, see Section 739
- Polypropylene Pipe, see Section 740
- Corrugated Metal Pipe, see Section 760

618.3 CONSTRUCTION METHODS:

Trench excavation, backfilling, and compaction shall be accomplished in accordance with Sections 601 for rigid pipe and 603 for flexible pipe, except as specified below, or as modified by special provisions.

The laying of the pipe shall be in finished trenches free from water or debris, and shall be commenced at the lowest point, with the spigot ends pointing in the direction of the flow. Each pipe shall be laid firmly and true to line and grade, in such manner as to form a close concentric joint with the adjoining pipe and to prevent sudden off-sets of the flowline. Any adjustment to line and grade shall be made by scraping away or filling in under the body of the pipe, never by wedging or blocking under the pipe ends.

Trenchless installations of piping shall conform to the requirements of Section 607.

Variation from prescribed alignment and grade shall not exceed 0.10 foot and the rate of departure from or return to established grade or alignment shall be no more than 1 inch in 10 feet of pipe line unless otherwise approved by the Engineer. For closures and deflection angles greater than 10 degrees, joints shall be made by use of a bend, specially manufactured fitting, or by a concrete collar, per standard details. Pipe shall be of the type, class and size shown on the plans or in the special provisions.

618.4 JACKING PIPE:

Pipe jacking shall be in accordance with Section 602.

618.5 INSPECTION AND TESTING:

Testing and inspection shall be in accordance with Section 611.

618.6 MEASUREMENT:

(A) Main Line Pipe: Shall be the number of linear feet of pipe laid as measured along the pipe axis.

Unless hereinafter modified, measurement shall extend through manholes when no change in pipe size occurs. When a change in pipe size occurs within a manhole, unless hereinafter modified, measurement for each size will be taken to the centerline of the manhole.

(B) Connecting Pipe: Shall be the number of linear feet of pipe installed, as measured along the pipe axis from a main line pipe, or a manhole, or a catch basin to a catch basin, or a plugged end, and shall include the portions of the connecting pipe embedded in the above structures.

618.7 PAYMENT:

(A) Main Line Pipe: Will be paid at the unit price bid per linear foot, to the nearest foot, for each size and type of pipe and shall be compensation in full for furnishing and installing the type of pipe as specified and as shown on the plans including removal of obstructions, excavation, bedding, backfilling, compacting, testing, joint materials, joining, collars, and field closures.

(B) Connecting Pipe: Will be paid at the unit price bid per linear foot, to the nearest foot for each size of pipe and shall be compensation in full for furnishing and installing complete in place as shown on the plans and as specified, the connecting pipe and specials including spur connections, removal of obstructions, excavation, bedding, backfilling, compacting, joint materials, joining, collars, field closures, and testing.

- End of Section -

Case 13-15 revisions 03-19-14

SECTION 101

ABBREVIATIONS AND DEFINITIONS

101.1 ABBREVIATIONS:

Wherever the following abbreviations are used in these specifications, standard details or on the plans, they are to be constructed the same as the respective expressions represented.

AASHTO	American Association of State Highway and Transportation Officials
AAN	American Association of Nurserymen
AB	Aggregate base
Aban	Abandon
ABC	Aggregate base course
AC	Asphalt cement or concrete
ACB	Asphalt concrete base
ACI	American Concrete Institute
ACP	Asbestos cement pipe
ACPA	American Concrete Pipe Association
ACWS	Asphalt concrete wearing surface
AFRB	Arizona Fire Rating Bureau
AGC	Associated General Contractors of America, Inc.
Agg	Aggregate
ADOT	Arizona Department of Transportation
Ahd	Ahead
AIA	American Institute of Architects
AIEE	American Institute of Electrical Engineers
AISC	American Institute of Steel Construction
ANSI	American National Standards Institute
APA	American Plywood Association
Approx	Approximate
APWA	American Public Works Association
AR	Aged residue
ARIZ	Arizona Department of Transportation test method
ARS	Arizona Revised Statutes
ASCE	American Society of Civil Engineers
ASME	American Society of Mechanical Engineers
ASTM	American Society for Testing Materials
Ave	Avenue
AWPA	American Wood Preservers Association
AWSC	American Welding Society Code
AWWA	American Water Works Association
Bbl	Barrel
BC	Beginning of curve
BCR	Beginning of curb return
Beg	Beginning
Bk	Book or Back
Blvd	Boulevard
BM	Bench Mark or Board Measure
Brg	Bearing
BST	Bituminous Surface Treatment
BTB	Bituminous Treated Base
BTU	British Thermal Units
BVC	Beginning of vertical curve
C	Centigrade or Curb
CB	Catch Basin
CBF&C	Catch basin frame & cover
CC or C/C	Center to Center
CE	City or County Engineer
Cem	Cement
CF	Curb face
cfs	Cubic Feet per second
CIP	Cast Iron pipe
CIPP	Cast-in-place concrete pipe
CL or C	Centerline
Cm	Centimeter
CMP	Corrugated metal pipe
CO	Clean out
Col	Column
Conc	Concrete
Const	Construct
CP	Concrete pipe (non-reinforced)
CTB	Cement Treated Base
Cu	Cubic
Deg	Degree
DF	Douglas Fir
DG	Decomposed granite
Dia	Diameter
Dim	Dimension
DIP	Ductile Iron Pipe
Div	Division
Dr	Drive
Drwg	Drawing
Dwy	Driveway
Ea	Each
Ease	Easement
E	East
EC	End of curve
ECR	End of curb return
El or Elv	Elevation
Equa or Eq	Equation
EVC	End of vertical curve
Ex or Exist	Existing
F	Fahrenheit
FB	Field book
F & C	Frame & cover
FH	Fire hydrant
FL or F	Floor line or flow line
Fl El	Floor Elevation
Fnd	Found
fps	Feet per second
FS	Finished surface
FSS	Federal Specifications and Standards
Ft	Foot or feet
G	Gutter
Ga	Gage
Galv	Galvanized
GL	Ground line
Gpm	Gallons per minute

Field Code Changed

Formatted: Font: Bold

Revised 2012

Gr	Grade
H	High or height
HC	House connection
Hdwl	Headwall
Horiz	Horizontal
Hwy	Highway
ICA	Industrial Commission of Arizona
ID	Improvement District or inside diameter
IE	Invert Elevation
IEEE	Institute of Electrical and Electronic Engineers
In	Inch
Inv	Invert
IP	Iron Pipe
IPS	Iron Pipe Size
Irrig	Irrigation
Jt	Joint
JC	Junction Chamber
Jct	Junction
JS	Junction Structure
L	Length
Lb	Pound
L&T	Lead and tack
LD	Local depression
LF	Linear Feet
LH	Lamp hole
Lin	Linear
Long	Longitudinal
Lt	Left
M	Map or maps
MAG	Maricopa Association of Governments
Max	Maximum
MCR	Maricopa County Records
Meas	Measured
MH	Manhole
MHF&C	Manhole frame and cover
Min	Minutes or minimum
Misc	Miscellaneous
ML or M	Monument line
mm	Millimeter
Mon	Monolithic or monument
MTD	Multiple tile duct
N	North
NBS	National Bureau of Standards
NCPI	National Clay Pipe Institute
NE	Northeast
NEC	National Electric Code
NEMA	National Electrical Manufacturer's Association
NFPA	National Fire Protection Association
NP	Non-plastic
NPI	Non pay item
NSC	National Safety Council
NSF	National Sanitation Foundation
NW	Northwest
No	Number
OC	On center
OD	Outside diameter
Oz	Ounces
P.C	Point of curvature
PCC	Point of compound curve or Portland Cement Concrete
PI	Point of intersection or plastic index
PL	Property line
POC	Point of Curve
POS	Point of Spiral
PP	Power pole
ppm	Parts per million
PRC	Point of reverse curve
Prod	Produced
Prop	Proposed or property
psi	Pounds per square inch
psf	Pounds per square foot
PT or POT	Point of Tangent
P&TP	Power and telephone pole
Pvmt	Pavement
Q	Rate of flow
R	Radius
RC	Reinforced concrete
RCP	Reinforced concrete pipe
Rd	Road
Rdwy	Roadway
Reinf	Reinforced, Reinforcing
Ret Wall	Retaining Wall
RGRCP	Rubber Gasket Reinforced Concrete Pipe
rpm	Revolutions Per Minute
Rt	Right
R/W	Right-of-way
S	South or slope
SAE	Society of Automotive Engineers
San	Sanitary
SC	Spiral to Curve
SCCP	Steel cylinder concrete pipe
SD	Storm drain or Sewer District
Sdl	Saddle
Sec	Seconds
Sect	Section
SE	Southeast
Sht	Sheet
Spec	Specifications
SPR	Simplified Practice Recommendation
Sp MH	Special manhole
Sq Ft Yd	Square Foot, Yard
SS	Sanitary sewer
St	Street
Sta	Station
Std	Standard
Str gr	Structural grade
Struct	Structure or structural
SW	Southwest
T	Tangent Distance
Tel	Telephone

Temp	Temporary
TH	Test hole
TP	Telephone pole
Tr	Tract
Trans	Transition
TS	Traffic signal or Tangent to spiral
TSC	Traffic signal conduit
Typ	Typical
UL	Underwriters' Laboratories Inc.
USC & GS	United States Coast and Geodetic Survey
USGS	United States Geological Survey
V	Velocity of flow
VC	Vertical curve
VCP	Vitrified clay pipe
Vert	Vertical
W	West or width
WI	Wrought iron
WS	Wearing surface
Wt	Weight
Yd	Yard
‘	feet or minutes
“	inches or seconds
°	degrees
%	percent
#	number or pound
@	at
/	per
=	equals

SECTION 101

101.2 DEFINITIONS AND TERMS:

Whenever in these specifications or in other contract documents the following terms or pronouns in place of them are used, the intent and meaning shall be interpreted as follows:

Addendum: A supplement to any of the Contract Documents issued, in writing, after advertisement of but prior to the opening of bids for a contract.

Advertisement: The public announcement, as required by law, inviting bids for work to be performed or materials to be furnished.

Agency: The governmental agency for which the construction is being done, either by permit or contract.

Architect: The individual or firm who has accomplished the architectural services for the project, including his representatives.

Arizona Test Method: Arizona Department of Transportation Materials Testing Manual test method.

Award: The formal action of the governing body is accepting a proposal.

Backfill: Material placed in an excavated space to fill such space. For trenches, see definitions for Initial Backfill and Final Backfill. ~~this space will be the area from 1 foot above the top of the pipe or conduit to the existing or proposed finished grade of pavement.~~

Base Course: The upper course of the granular base of a pavement or the lower course of an asphalt concrete pavement structure.

Bedding: A backfill material layer placed on top of the pipe foundation to the bottom of the pipe, typically 4 – 6 inches in height. The bedding establishes line and grade to provide firm, but not hard, pipe support.
~~**Is the material placed in the area from the bottom of the trench to 1 foot above the top of the pipe or conduit.**~~

Bidder: Any qualified individual, firm, partnership, corporation or combination thereof, acting directly or through a duly authorized representative who legally submits a proposal for the advertised work.

Board of Supervisors: The Maricopa County Board of Supervisors acting under the authority of the laws of the State of Arizona.
[Type a quote from the document or the summary of an interesting point. You can position the text box anywhere in the document. Use the Drawing Tools tab to change the formatting of the pull quote text box.]

Bond Issue Project: A project financed from bonds issued by the City or County pledging credit or a revenue resource.

Bridge: A structure, including supports, erected over a depression or an obstruction, as water, highway, or railway, and having a track or passageway for carrying traffic or other moving loads and having a length measured along the center of roadway of more than 20 feet between undercopings of abutments or extreme ends of openings for multiple boxes.

(Length) The length of a bridge structure is the over-all length measured along the line of survey stationing back to back of backwalls of abutments, if present, otherwise end to end of the bridge floor; but in no case less than the total clear opening of the structure.

(Roadway Width) The clear width measured at right angles to the longitudinal centerline of the bridge between the

Formatted: Font: Bold
Formatted: Indent: Left: 0", First line: 0"
Formatted: Font: Bold
Formatted: Indent: Left: 0", First line: 0"
Formatted: Indent: Left: 0", First line: 0"
Formatted: Font: Bold

bottom or curbs or guard timbers or in the case of multiple heights of curbs, between the bottoms of the lower risers.

Budget Project: A project financed by funds from General Tax levies and shared revenue funds set aside in the annual budget adopted by the Council or Board of Supervisors.

Building: Any structure built for the support, shelter, or enclosure of persons, animals, chattel or movable property.

Building Code: A regulation adopted by the governing body establishing minimum standards of construction for the protection of the public health, safety, and welfare in terms of measured performance rather than in terms of rigid specification of materials and methods.

Calendar Day: Every day shown on the calendar.

Call for Bids: The standard forms inviting proposals or bids.

"Careful and prudent manner": means conducting excavation in such a way that when it approaches within twenty-four inches of the underground facility located and marked by the owner or operator, by stakes, paint or in some customary manner, the exact location is manually determined, and the uncovered facility is supported and protected.

Change Order: A written order issued by the Engineer to the Contractor to make changes in the work or to perform extra work, and setting forth conditions for payment and/or adjustment in time of completion.

City: A municipal corporation, organized and existing under and by virtue of the laws of the State of Arizona.

City/County Clerk: The duly authorized person who performs the duties of clerk for the Contracting Agency.

Completion Time: The number of calendar days for completion of an act, including authorized time extensions. In case a calendar date of completion is shown in the proposal in lieu of the number of calendar days, the contract shall be completed by that date. The time within which an act is to be done shall be computed by excluding the first and including the last day; and if the last day be Sunday or a legal holiday, that shall be excluded.

Conflicting Utility: An existing utility, shown or not shown on the plans is conflicting when any part of the utility falls within the dimensions of the new installation, such that it would be in physical contact with the new installation.

Construction Project: The erection, installation, remodeling, alteration, of durable facilities upon, under, or over the ground. This shall include, but is not limited to buildings, roadways and utility pipes, lines, poles or other structures.

Contingent Bid Item: This is a minor bid item which is likely, but not certain, to occur during the course of work. If the Engineer determines that this work is required, the Contractor will accomplish the work and payment will be made based on the contingent unit bid price included in the proposal. Since the quantity listed in the proposal is primarily for bid comparison, the amount of work required by the Engineer may vary materially from this.

Contract: The written instrument executed by the Contractor and the Contracting Agency by which the Contractor is bound to furnish all labor, equipment, and materials and to perform the work specified, and by which the Contracting Agency is obligated to compensate the Contractor therefore at the prices set forth therein. The Contract Documents are herewith by reference made a part of the contract as if fully set forth therein.

Contract Documents: All the integral documents of the contract, including but not limited to, Call for Bids, Plans, Standard Specifications and Details, Special Provisions, Proposal, Addenda, Performance Bond, Payment Bond, Certificates of Insurance, Ordinance, Contract, and Change Orders.

Formatted: Left

SECTION 101

Contracting Agency: The legal entity that has contracted for the performance of the work or for whom the work is being performed.

Contractor: The individual, firm, partnership, corporation or combination thereof entering into a contract with the Contracting Agency to perform the advertised work.

Council: The City Council which by law constitutes the Legislative Department of the City.

County: Maricopa County, organized and existing under and by virtue of the laws of the State of Arizona.

Culvert: Any structure not classified as a bridge, which provides an opening under or adjacent to the roadway.

Days: Unless otherwise designated, days will be understood to mean calendar days.

Emergency: Unforeseen occurrences and combinations of circumstances involving the public welfare or the protection of work already done under the Contract Documents, or which endanger life or property and call for immediate action or remedy.

Engineer: The person, appointed as City or County Engineer by the Council or the Board of Supervisors, acting directly or through his duly authorized representative.

Equipment: (Construction) — All machinery and equipment, together with the necessary supplies for upkeep and maintenance, and also tools and apparatus necessary for the proper construction and acceptable completion of work. (Installed) — All material or articles used in equipping a facility as furnishings or apparatus to fulfill a functional design.

Extra Work: An item of work not provided for in the contract as awarded but found essential to the satisfactory completion of the contract within its intended scope.

Final Backfill: The area of a pipe trench backfill envelope defined as the area above initial backfill to the top of the trench or to the bottom of the road base material. Final backfill is typically compacted native material.

Flooding: Flooding will consist of the inundation of the entire lift with water, puddle with poles or bars to insure saturation of the entire lift.

Force Account Work: Work done by personnel of the Contracting Agency as in-house work.

Foundation: For buildings or structures, this will be the substructure. For a pipe trench the foundation is defined as the native or prepared material upon which the bedding material is placed. ~~For pipe this will be the native material or prepared material on which the pipe rests; normally, this is the bottom grade line of the trench.~~

Full Depth Pavement: An asphalt concrete pavement structure in which the granular base and subbase are replaced by proportionate thicknesses of asphalt concrete.

Haunching: The area of a pipe trench backfill envelope that provides the majority of resistance against soil and traffic loadings. The haunching area is defined as the zone between the bottom of the pipe and the centerline, or springline, of the pipe.

Formatted: Font: Bold

Improvement District Project: A project financed by assessments against the property included in a special assessment district authorized under, or implemented by an act of the legislature of the State and/or a procedural ordinance of the City or County.

Initial Backfill: The area of a pipe trench backfill envelope defined as the area between the springline and a minimum of 12 inches above the crown of the pipe.

Inspector: The Engineer's authorized representative assigned to make detailed inspections of contract performance.

~~**Jetting:** Jetting is the densification of material, using a continuous supply of water, under pressure, transmitted to the material through a rigid pipe of sufficient length to reach the bottom of the lift being densified. In all cases, the entire lift will be completely saturated working from the top to the bottom.~~

Laboratory: The established materials testing laboratory of the Contracting Agency's Engineering Department, or other laboratories acceptable to and/or authorized by the Engineer to test materials and work involved in the Contract.

Major Item: A major item shall be the total of any item of work and/or materials specified in the bid schedule that exceeds the amount established in Table 109-1.

Materials: Any substance specified in the project, equipment and other material used or consumed in the performance of the work.

Median: The portion of a divided highway separating the roadways used by traffic going in opposite directions.

Native Material: A sound earthen material free from broken concrete, broken pavement, wood or other deleterious material with no piece larger than 4 inches.

Formatted: Font: Bold

Formatted: Indent: Left: 0", First line: 0"

Non Pay Item: An item of work for which no separate payment will be made under the proposal, but which must be included as an incidental cost for payment on an associated item included in the proposal.

Notice of Award: A letter from the City or County Clerk advising the Contractor that he is the successful bidder and the Council or Board of Supervisors has accepted his proposal.

Notice to Proceed: A directive issued by the Engineer, authorizing the Contractor to start the work or improvements required in the Contract.

Obligee: One to whom another is obligated.

Open Trench: The excavated area shall be considered as open trench until all the aggregate base course for pavement replacement has been placed and compacted or, if outside of a pavement area, until the excavated area is brought to finish grade or natural grade.

Owner: The City or County, acting through its legally constituted officials, officers or employees.

Pavement: Any surfacing of streets, alleys, sidewalks, courts, driveways, etc., consisting of mineral aggregate bound into a rigid or semi-rigid mass by a suitable binder such as, but not limited to, Portland cement or asphalt cement.

Pavement Structure: The combination of subbase, base course, and surface course placed on a subgrade to support the traffic load and distribute it to the roadbed.

Pay Item: A detail of work for which separate payments are to be made under the Contract, as specified in the proposal.

Payment Bond: The security provided by the Contractor solely for the protection of claimants, supplying labor and materials to the Contractor or his Subcontractors.

Performance Bond: The security provided by the Contractor solely for the protection of the Contracting Agency and conditioned upon the faithful performance of the contract in accordance with the plans, specifications and conditions thereof.

Permit: The license to do construction in public rights-of-way and/or easements; issued by an Agency to a

Contractor working for another party.

Pipe Embedment Zone: The area of a pipe trench backfill envelope, consisting of the bedding, haunching, and initial backfill areas.

Formatted: Font: Bold

Plans: All approved drawings or reproductions thereof pertaining to the work and details therefore, which are made a part of the Contract Documents.

Plant: The Contractor's and/or subcontractor's facilities, including but not limited to small tools and mobile equipment, located on and/or offsite, necessary for preparation of materials and prosecution of work for the project.

Principal: The individual, firm or corporation primarily liable on an obligation, as distinguished from a surety.

Professional Engineer: A person who has a current engineering registration granted by the Arizona State Board of Technical Registration in one or more branches of engineering recognized by the board.

Profile Grade: The trace of a vertical plan intersecting the top surface of the proposed wearing surface, usually along the longitudinal centerline of the roadbed. Profile grade means either elevation or gradient of such trace according to the context.

Project: A specific coordinated construction or similar undertaking identified by a single project number and bid and awarded as one contract. On occasion two or more projects may be bid and awarded as a single contract.

Proposal: The offer of a bidder on the prescribed form, to perform the work and to furnish the labor and materials at the prices quoted.

Proposal Form: The approved form on which the Contracting Agency requires bids to be prepared and submitted for the work.

Proposal Guarantee: The security furnished with a bid to guarantee that the bidder will enter into the contract if his bid is accepted.

Proposal Pamphlet: The book or pamphlet pertaining to a specific project, containing proposal forms, special provisions and other information necessary for and pertinent to the preparation of the proposal or bid.

Referred Documents: On all work authorized by the Contracting Agency, any referenced documents in the specification, i.e., Bulletins, Standards, Rules, Methods of Analysis or test. Codes and Specifications of other Agencies, Engineering Societies or Industrial Associations, refer to the Latest Edition thereof, including Amendments, which are in effect and published at the time of Advertising for Bids or the issuing of a permit for the work, unless otherwise stated.

Right-of-way: A general term denoting land, property, or interest therein, usually in a strip acquired for or devoted to a street, highway, or other public improvement.

Road: A general term denoting a public way for purposes of vehicular travel, including the entire area within the right-of-way.

Roadside: A general term denoting the area adjoining the outer edge of the roadway. Extensive areas between the roadways of a divided highway may also be considered roadside.

Roadside Development: Those items necessary to the complete roadway which provide for the preservation of landscape materials and features; the rehabilitation and protection against erosion of all areas disturbed by construction through seeding, sodding, mulching and the placing of other ground covers; such suitable planting and other improvements as may increase the effectiveness and enhance the appearance of the roadway.

Roadway: The portion of the right-of-way intended primarily for vehicular traffic, and including all appurtenant

structures and other features necessary for proper drainage and protection. Where curbs exist, it is that portion of roadway between the faces of the curbs.

Sewers: Conduits and related appurtenances employed to collect and carry off water and waste matter to a suitable point of final discharge.

Shop Drawings: Drawings or reproduction of drawings, detailing; fabrication and erection of structural elements, falsework and forming for structures, fabrication of reinforcing steel, installed equipment and installation of systems, or any other supplementary plans or similar data, which the Contractor is required to submit for approval.

Shoulder: The portion of the roadway contiguous with the traveled way for accommodation of stopped vehicles, for emergency use, and for lateral support of base and surface courses.

Sidewalk: That portion of the roadway primarily constructed for the use of pedestrians.

Special Provisions: The special conditions, requirements, additions, and/or revisions to the Standard Specifications, applicable to the work, to cover conditions or requirements peculiar to the project under consideration.

Specifications: The descriptions, directions, provisions, and requirement for performing the work as contained in the Contract Documents.

Springline: The horizontal centerline of a pipe in a pipe trench backfill envelope. The springline separates the haunching area from the initial backfill in the pipe embedment zone.

Formatted: Font: Bold

Standard Details: Uniform detail drawings of structures or devices adopted as Standard Details by the Engineer.

Standard Specifications: Uniform general specifications adopted as Standard Specifications by the Engineer.

Storm Drain: Any conduit and appurtenance intended for the reception and transfer of storm water.

Street: Streets, avenues, alleys, highways, crossings, lanes, intersections, courts, places, and grounds now open or dedicated or hereafter opened or dedicated to public use and public ways.

Structures: Bridges, culverts, catch basins, drop inlets, retaining walls, cribbing, manholes, end walls, sewers, service pipes underdrains foundation drains, fences, swimming pools, and other features which may be encountered in the work and not otherwise classed herein.

Subbase: The lower course of the base of a roadway, immediately above the subgrade.

Subcontractors: Those having direct contracts with the Contractor and those who furnish material worked into a special design according to the Plans and Specifications for the work, but not those who merely furnish material not so worked.

Subgrade: The supporting structures on which the pavement and its special undercourses rest.

Substructure: All of that part of the structure or building below the bearings of simple and continuous spans, skewbacks of arches and tops of footings of rigid frames, together with the backwalls, wingwalls and wing protection railings.

Superintendent: The Contractor's authorized representative in responsible charge of the work.

Superintendent of Streets: The person duly appointed by the Council of the Contracting Agency, as provided by the Arizona Revised Statutes.

Superstructure: The entire structure or building except the substructure.

SECTION 101

Supplemental Specifications: Additions and revisions to the Standard Specifications that are adopted subsequent to issuance of the printed book.

Supplementary General Conditions: Requirements, or revisions, to the Standard General Conditions, applicable to the work, and to cover conditions or requirements peculiar to the project under consideration.

Surety: The individual, firm or corporation, bound with and for the Contractor for the acceptable performance, execution, and completion of the work, and for the satisfaction of all obligations incurred.

Surface Course: The finished or wearing course of an asphalt concrete pavement structure.

Title or Headings: The titles or headings of the sections and subsections herein are intended for convenience of reference and shall not be considered as having any bearing on their interpretation.

Township, City, Town or District: A subdivision of the County used to designate or identify the location of the proposed work.

Traveled Way: The portion of the roadway for the movement of vehicles, exclusive of shoulders and auxiliary lanes.

"Underground Facility": means any item which shall be buried or placed below ground for use in connection with the storage or conveyance of water, sewage, electronic, telephone or telegraphic communications, electric energy, oil, gas or other substances, and shall include, but not be limited to pipes, sewers, conduits, cables, valves, lines, wires, manholes, attachments and those portions of poles and their attachments below ground.

Utility: Pipe lines, conduits, ducts, transmission lines, overhead or underground wires, railroads, storm drains, sanitary sewers, irrigation facilities, street lighting, traffic signals, and fire alarm systems, and appurtenances of public utilities and those of private industry, businesses or individuals solely for their own use or use of their customers which are operated or maintained in, on, under, over or across public right-of-way or public or private easement.

Waterworks (Water Supply System): The reservoirs, pipe lines, wells, pumping equipment, purification works, mains, service pipes, and all related appliances and appurtenances utilized in the procurement, transportation and delivery of an adequate, safe, and palatable water supply for the Contracting Agency.

Work: Any or all of the improvements mentioned and authorized to be made, and the construction, demolition, reconstruction, and repair of all or any portion of such improvements, and all labor, services, incidental expenses, and material necessary or incidental thereto.

Working Day: A calendar day, exclusive of Saturdays, Sundays, and Contracting Agency recognized legal holidays, on which weather and other conditions not under the control of the Contractor will permit construction operations to proceed for the major part of the day with the normal working force engaged in performing the controlling item or items of work which would be in progress at that time.

101.3 In order to avoid cumbersome and confusing repetition of expressions in these specifications, it is provided that whenever anything is, or is to be, done, if, as, or, when, or where contemplated required, determined, directed, specified, authorized, ordered, given, designated, indicated, considered necessary, deemed necessary, permitted, reserved, suspended, established, approval, approved, disapproved, acceptable, unacceptable, suitable, accepted, satisfactory, unsatisfactory, sufficient, insufficient, rejected, or condemned, it shall be understood as if the expression were followed by the words by the Engineer or to the Engineer.

- End of Section -

Case 13-15 revisions 08-6-14

SECTION 601

RIGID PIPE TRENCH EXCAVATION, BACKFILLING AND COMPACTION

Formatted: Font: Bold

Field Code Changed

601.1 DESCRIPTION:

The work covered by this specification consists of furnishing all plant, labor, equipment, appliances and materials, and performing all operations in connection with the trench excavation, ~~and~~ backfilling and compaction of trenches for a single rigid pipe installation in accordance with the plans and special provisions.~~, except for the installation of high-density polyethylene pipe (HDPE).~~ Pipe materials that are considered to be rigid include reinforced concrete pipe, non-reinforced concrete pipe, cast-in-place concrete pipe, reinforced concrete cylinder pipe, vitrified clay pipe and ductile iron pipe. All other pipe materials are considered flexible pipe. See Section 603 for trench excavation, backfilling, and compaction of flexible pipe.

The Trench Cross-Section Detail shown on Detail 200-2 illustrates the terminology used in this specification.

See Section 615 for sewer line construction procedures.

See Section 618 for storm drain construction procedures.
~~See Section 603 for trench excavation, backfilling, and compaction of HDPE pipe.~~

Excavation for appurtenance structures, such as manholes, inlets, transition structures, junction structures, vaults, valve boxes, catch basins, etc., shall be deemed to be in the category of trench excavation.

See Section 602 for trenchless installations.

601.2 EXCAVATION:

601.2.1 General: The Contractor shall perform all excavation of every description and of whatever substances encountered, to the depths indicated on the plans, and including excavation ordered by the Engineer of compacted backfill for the purpose of making density tests on any portion of the backfill.

All excavation shall be open cut unless otherwise shown on the plans or approved by the Engineer.

601.2.2 Trench Widths: Trenches for other than cast-in-place concrete pipe shall conform to the dimensions in Table 601-1, unless otherwise specified in the special provisions, indicated on the plans, and/or approved by the Engineer.

~~TABLE 601-1~~		
~~TRENCH WIDTHS~~		
~~Size Of Pipe (I.D.)~~	~~Maximum Width At Top Of Pipe Greater Than O.D. Of Barrel~~	~~Minimum Width At Springline Each Side of Pipe (1)~~
~~Less than 18 inches~~	~~16 inches~~	~~6 inches~~
~~18 inches to 24 inches inclusive~~	~~19 inches~~	~~7 ½ inches~~
~~27 inches to 39 inches inclusive~~	~~22 inches~~	~~9 inches~~
~~42 inches to 60 inches inclusive~~	~~½ O.D.~~	~~12 inches~~
~~Over 60 inches~~	~~36 inches~~	~~12 inches~~

Table 601-1		
Size of Pipe (Nom. Dia.)	**Maximum Width At Top Of Pipe Greater Than O.D. Of Bell**	**Minimum Width At Springline Each Side of Pipe (1)**
Less than 18 inches	16 inches	6 inches
18 inches to 24 inches inclusive	19 inches	7.5 inches
27 inches to 39 inches inclusive	22 inches	9 inches
42 inches to 60 inches inclusive	30 inches	12 inches
66 inches to 78 inches inclusive	42 inches	15 inches
84 inches to 96 inches inclusive	50 inches	19 inches

102 inches to 120 inches inclusive	60 inches	24 inches

(1) When the specified compaction cannot be obtained in the haunch area and/or ~~bedding~~ initial backfill zone, the Contractor shall make necessary changes in his methods and/or equipment to obtain the desired results. In some instances, the Minimum Width at Springline shall be adjusted wider to assist the Contractor in obtaining the compaction. The Engineer must be satisfied with the Contractor's compaction effort, concur with the change and approve the revised distance. There shall be no additional cost to the Agency for the extra trench width.

For multiple pipe installations in a single trench, the Engineer shall provide details on the plans or in the Special/Technical Provisions as to the layout, pipe configuration, distances between pipes and trench walls, the type of backfill~~, bedding~~ and bedding ~~foundation~~ materials, etc.

The width of the trench shall not be greater than the maximum indicated in Table 601-1, at and below the level of the top of the pipe. The width of the trench above that level may be made as wide as necessary for sheeting and bracing, and for proper installation of the work.

If the maximum trench width as specified in Table 601-1 is exceeded at the top of the pipe the Contractor shall provide, at no additional cost to the Contracting Agency, the necessary additional load bearing capacity by means of ~~bedding~~initial backfill, having a higher bedding factor than that specified, higher strength pipe, a concrete cradle, cap or encasement, or by other means approved in writing by the Engineer. Where safety or undermining situations occur, a CLSM backfill may be used as needed.

601.2.3 Trench Grade: Alignment and elevation stakes shall be furnished the Contractor at set intervals and agreed upon offsets. On water main projects, elevation stakes will be furnished only when deemed necessary by

Comment [WW1]: ASTM trench widths.

Comment [WW2]: Working Group perspective is to keep as-is since this is the cost of doing business and typically this is the embankment condition. If trench widths fall outside the table maximum, then should be designed by a structural engineer. Added CLSM statement on 6/27.

the Engineer. In all cases where elevation stakes are furnished, the Engineer will also furnish the Contractor with cut sheets.

For all pipe 12 inches or greater in diameter, the Contractor shall excavate for and provide an initial granular bedding at least 4 inches thick or 1/12 the O.D. of the pipe whichever is greater. This bedding material shall be placed at a uniform density with specified ~~minimum~~ compaction and fine graded as specified below.

Bell or coupling holes shall be dug after the trench bottom has been graded. Such holes shall be of sufficient width to provide ample room for caulking, banding, or bolting. Holes shall be excavated only as necessary to permit accurate work in the making of the joints and to insure that the pipe will rest upon the prepared bottom of the trench, and not be supported by any portion of the joint.

Depressions for joints, other than bell-and-spigot, shall be made in accordance with the recommendations of the joint manufacturer for the particular joint used.

601.2.4 Fine Grading: Unless otherwise specified in the plans and/or special provisions, the bottom of the trench shall be accurately graded to provide uniform bearing and support for each section of the pipe at every point along its entire length, except for portions of the pipe where it is necessary to excavate for bells and for proper sealing of the pipe joints.

601.2.5 Overexcavation: Except at locations where excavation of rock from the bottom of the trench is required, care shall be taken not to excavate below the depth indicated.

Unauthorized excavation below the specified grade line shall be refilled at the Contractor's expense with ABC material compacted to a uniform density of not less than 95 percent of the maximum density as determined by AASHTO T-99 and T-191 or ASTM D6938. When AASHTO T-99, method A or B, and T-191 are used for density determination, ARIZ 227c will be used for rock correction.

Whenever bedrock is encountered in the trench bottom, it shall be overexcavated to a minimum depth of six inches below the O.D. of the pipe. This overexcavation shall be filled with granular material placed with the minimum possible compaction.

Whenever unsuitable soil incapable of supporting the pipe is encountered, the Contractor will notify the Engineer and a field determination will be made as to the depth of overexcavation and the granular fill required.

601.2.6 Excavation for Manholes, Valves, Inlets, Catch Basins and Other Accessories: The Contractor may excavate to place the concrete structure directly against the excavated surface, provided that the faces of the excavation are firm and unyielding and are at all points outside the structure lines shown on the plans. If the native material is such that it will not stand without sloughing or if precast structures are used, the Contractor shall overexcavate to place the structure and this overexcavation shall be backfilled with the same material required for the adjoining pipe line trench and compacted per Table 601-2.

Any unnecessary excavation below the elevation indicated for the foundation of any structure shall be replaced with the same class of concrete specified for the structure or with 1 ½ sack controlled low strength material as specified in Section 728. When the replacement material is structural concrete, the material shall be placed at the same time as the structure. However, when using 1 ½ sack controlled low strength material, placement of the material shall be per Section 604 which will require a time lag between the material and the structural concrete. The placement of the additional material shall be at no cost to the Agency.

601.2.7 Pavement and Concrete Cutting and Removal: Where trenches lie within the Portland cement concrete section of streets, alleys, driveways, or sidewalks, etc., such concrete shall be sawcut to neat, vertical, true lines in such a manner that the adjoining surface will not be damaged. The minimum depth of cut shall be 1 ½ inches or 1/4 of the thickness, whichever is greater.

Asphalt pavement shall be clean-cut, with approved equipment and by approved methods in accordance with the requirements of Section 336.

No ripping or rooting will be permitted outside limits of cuts. Surfacing materials removed shall be hauled from the job site immediately, and will not be permitted in the backfill.

See Detail 200-1 and 200-2 for further requirements.

601.2.8 Grading and Stockpiling: All grading in the vicinity of trench excavation shall be controlled to prevent surface water from flowing into the trenches. Any water accumulated in the trenches shall be removed by pumping or by other approved methods.

During excavation, material suitable for backfilling shall be piled in an orderly manner, a sufficient distance back from the edges of trenches, to avoid overloading and to prevent slides or cave-ins. Material unsuitable for backfilling, or excess material, shall be hauled from the job site and disposed of by the Contractor.

The Contractor shall, prior to ~~final acceptance~~commencement of the work, submit a letter to the Contracting Agency stating the location of each disposal site for all excess or unsuitable material and certify that he has obtained the property owner's permission for the disposal of all such materials.

Where the plans and/or special provisions provide for segregation of topsoil from underlying material for purposes of backfill, the material shall not be mixed.

601.2.9 Shoring and Sheeting: The Contractor shall do such trench bracing, sheathing, or shoring necessary to perform and protect the excavation as required for safety and conformance to governing laws. The bracing, sheathing, or shoring shall not be removed in one operation but shall be done in successive stages as determined by the Engineer to prevent overloading of the pipe during backfilling operations. The cost of the bracing, sheathing, or shoring, and the removal of same, shall be included in the unit price for the pipe.

All shoring and sheeting deemed necessary to protect the excavation and to safeguard employees, shall be installed. See Section 107.

601.2.10 Open Trench: Except where otherwise noted in the special provisions, or approved in writing by the Engineer, the maximum length of open trench, where the construction is in any stage of completion (excavation, pipe laying or backfilling), shall not exceed 1320 feet in the aggregate at any one location.

Any excavated area shall be considered open trench until all ABC for pavement replacement has been placed and compacted. With the approval of the Engineer, pipe laying may be carried on at more than one separate location, the restrictions on open trench applying to each location. Trenches across streets shall be completely backfilled as soon as possible after pipe laying.

Substantial steel plates with adequate trench bracing shall be used to bridge across trenches at street crossings where trench backfill and temporary patches have not been completed during regular work hours. Steel plates shall be installed in accordance with Detail 211. Safe and convenient passage for pedestrians shall be provided. The Engineer may designate a passage to be provided at any point he deems necessary. Access to hospitals, fire stations and fire hydrants must be maintained at all times.

601.3 PROTECTION OF EXISTING UTILITIES:

601.3.1 Utilities: Unless otherwise shown on the plans or stated in the specifications, all utilities, either underground or overhead, shall be maintained in continuous service throughout the entire contract period. The Contractor shall be responsible and liable for any damages to or interruption of service caused by the construction.

If the Contractor desires to simplify his operation by temporarily or permanently relocating or shutting down any utility or appurtenance, he shall make the necessary arrangements and agreements with the owner and shall be completely responsible for all costs concerned with the relocation or shutdown and reconstruction. All property shall be reconstructed in its original or new location as soon as possible and to a condition at least as good as its previous condition. This cycle of relocation or shutdown and reconstruction shall be subject to inspection and approval by both the Engineer and the owner of the utility.

The Contractor shall be entirely responsible for safeguarding and maintaining all conflicting utilities that are shown on the plans (Sections 107 and 105 apply). This includes overhead wires and cables and their supporting poles whether they are inside or outside of the open trench. If, in the course of work, a conflicting utility line that was not shown on the plans is

discovered, the Contracting Agency will either negotiate with the owner for relocation, relocate the utility, change the alignment and grade of the trench or as a last resort, declare the conflict as "extra work" to be accomplished by the Contractor in accordance with Section 104.

601.3.2 Irrigation Ditches, Pipes and Structures: The Contractor shall contact the owners of all irrigation facilities, and make arrangements for necessary construction clearances and/or dry-up periods.

All irrigation ditches, dikes, headgates, pipe, valves, checks, etc., damaged or removed by the Contractor, shall be restored to their original condition or better, by the Contractor at no additional cost to the Contracting Agency.

601.3.3 Building, Foundations and Structures: Where trenches are located adjacent to building, foundations, and structures, the Contractor shall take all necessary precaution against damage to them. The Contractor shall be liable for any damage caused by the construction.

Except where authorized in the special provisions or in writing by the Engineer, water settling of backfill material in trenches adjacent to structures will not be permitted.

601.3.4 Permanent Pipe Supports: Permanent pipe supports for the various types and sizes of sewer, water and utility lines shall conform to the Standard Details or the details shown on the plans. Such pipe supports shall be erected at the locations shown on the plans and/or at any other locations as necessary as determined by the Engineer.

~~**601.3.5 Electronic, Telephonic, Telegraphic, Electrical, Oil and Gas Lines:** These underground facilities shall be adequately supported by the Contractor. Support for plastic pipes shall be continuous along the bottom of the pipe. Support for metal pipe and electrical conduit may be continuous or nylon webbing may be used for suspension at no greater than ten-foot intervals.~~

~~The Contractor shall avoid damaging the plastic pipe, pipeways or conduits during trench backfilling and during foundation and bedding placement.~~

~~There will be no measurement or payment for this work. The Contractor will include all associated costs in the unit price for the conduit installation.~~

Comment [WW3]: Working Group perspective is to remove this section. It is covered by other governing procedures.

601.4 FOUNDATION, BEDDING, HAUNCHING, BACKFILLING AND COMPACTION:

601.4.1 Foundation: The native or prepared material (when required) upon which the bedding material is placed.

601.4.~~1~~ 2 ~~Foundation~~Bedding: The material upon which the conduit or structure is to be placed shall be accurately finished to the grade or dimensions shown on the plans or as directed by the Engineer. The bottom portion of the trench shall be brought to grade so that the conduit or structure will be continuously in contact with the material on which it is being placed. If rocky or unsuitable soil is encountered, Subsection 601.2.5 applies.

Unless otherwise specified in the project plans or project specifications, the minimum material type shall be A.B.C. per Section 702.

Comment [WW4]: 4/29 revision from "granular".

601.4.~~2~~ 3 ~~Bedding~~Haunching: ~~Bedding s~~The material placed between the bedding and springline shall be constructed using the specified material and compacted for the full length of the pipe so as to distribute the load-bearing reaction uniformly to the bedding. If placed in lifts, the thickness shall not exceed 2 feet and shall be deposited and compacted to the specified density uniformly on each side of the pipe to prevent lateral displacement of the pipe. Compaction requirements shall be per Section 601.4.6. ~~hall consist of granular material containing no pieces larger than 1 ½ inches and free of broken concrete, broken pavement, wood or other deleterious material. Open graded rock will not be used without the written approval of the Engineer.~~

Comment [WW5]: Working group perspective that 2 feet vs 4 feet is more realistic to meet compaction requirements.

~~Where water consolidation is used, bedding for conduits, 24 inches or less in I.D., may be placed in one lift. For larger conduits the first lift shall not exceed the springline of the pipe.~~

Comment [WW6]: This is stated in the compaction methods section.

~~Where mechanical compaction is used, t~~The moisture content shall be such that the specified compaction can be obtained. ~~The first lift shall be 8 inches or two thirds of the distance to the springline whichever is greater. Succeeding lifts shall not exceed 2 feet loose and extreme care will be taken to prevent damage to or movement of the conduit by the compaction equipment.~~

Unless otherwise specified in the project plans or project specifications, the minimum material type shall be A.B.C. per Section 702. With agency approval, native or CLSM may be used as an option.

601.4.~~3~~ 4 ~~Backfill~~Initial Backfill: The material placed between the springline to 12 inches above top of pipe (minimum)~~Backfill shall be sound earthen material free from broken concrete, broken pavement, wood or other deleterious material. Unless otherwise specified, this may be native material with no piece larger than 4 inches, select material or aggregate base course.~~ shall be placed in lifts the height of which shall not exceed 2 feet or that which can be effectively compacted depending on the type of material, type of equipment and methods used. Compaction requirements shall be per Section 601.4.6. The moisture content shall be such that the specified compaction can be obtained.~~Backfill under street pavement shall be constructed per Detail 200-1 with the type of replacement noted on the plans or in the special provisions. Unless otherwise noted, backfill under single curb, curb and gutter, sidewalk, driveways, valley gutters, etc. shall be the same as the adjacent street pavement.~~

Unless otherwise specified in the project plans or project specifications, the minimum material type shall be A.B.C. per Section 702. With agency approval, native or CLSM may be used as an option.

Backfill, around utilities that are exposed during trench excavation, shall be placed in accordance with the ~~bedding~~ bedding methods.

601.4.5 Final Backfill: The material placed above the initial backfill shall be placed in lifts the height of which shall not exceed 2 feet or that which can be effectively compacted depending on the type of material, type of equipment and methods used. Compaction requirements shall be per Section 601.4.6. All backfill shall be constructed per Detail 200-1 with the type of replacement noted on the plans or in the special provisions. Unless otherwise noted, backfill under single curb, curb and gutter, sidewalk, driveways, valley gutters, etc. shall be the same as the adjacent street pavement.~~Where water consolidation is used, backfill will be placed in lifts as required in the following table prior to settlement.~~

Comment [WW7]: 4/29 revision from "granular".

Comment [WW8]: 4/29 revision from "granular".

Comment [WW9]: Move to other area in Spec?

Formatted: Justified

Comment [WW10]: 4/29 revision

~~Trench Width~~	~~Backfill Lifts~~
~~18" to 24"~~	~~Not to exceed 4'~~
~~25" to 36"~~	~~Not to exceed 6'~~
~~Over 36"~~	~~Not to exceed 8'~~

~~The above backfill lift limitations are not applicable when water saturation is done by the jetting method.~~

~~Where mechanical compaction is used, backfill shall be placed in lifts the height of which shall not exceed that which can be effectively compacted depending on the type of material, type of equipment and methods used, and under no circumstances shall exceed 4 feet.~~

601.4.~~4~~ 6 Compaction Densities: Unless otherwise provided in the plans and/or special provisions, the trench backfill shall be thoroughly compacted to not less than the densities in Table 601-2 when tested and determined by AASHTO T-99 and T-191 or ASTM D6938. When AASHTO T-99, method A or B, and T-191 are used for density determination, ARIZ-227c will be used for rock correction. All compaction discussed within this section shall be performed within 2 percentage points of optimum moisture content unless otherwise noted in the project plans or project specifications.

The density required will depend on the Type shown on the plans and/or called for in the special provisions. Density required for each type shall comply with Table 601-2.

TABLE 601-2
MINIMUM TRENCH COMPACTION DENSITIES

Backfill Type	Location	From Surface To 2 feet Below Surface	From 2 feet Below Surface To 1 foot Above Top of Pipe	From 1 foot Above Top of Pipe to Bottom of ~~Trench~~Pipe
I	Under any existing or proposed pavement, curb, gutter, attached sidewalk, roadway shoulders, and other areas within right-of-way subject to vehicular traffic~~or such construction included in the contract~~, or when any part of the trench excavation is within 2-feet of the existing pavement, curb, or gutter~~above~~.	100% for granular 95% for non-granular	~~90~~95%	~~90~~95%
II	On any utility easement ~~street, road~~ or ~~alley~~ right-of-way outside limits of Type I backfill.~~(I).~~	~~85~~95%	~~85~~95%	~~90~~95%
III	Around any structures (manholes, etc.) or exposed utilities.	95% for A.B.C., 100% for native ~~in all cases~~ or CLSM		

Note: The type required will generally be shown on the plans and the plans will govern. Where no type is shown on the plans, the type shall comply with Table 601-2.

A consideration in determining the backfill Types as shown on the plans, is based on the trench widths as shown in the Contract Documents. If these trench widths increase beyond those widths referred to above and fall within the 2-foot limit of paved surfaces and other improvements due to construction exigencies, the backfill designation for that portion within the 2-foot limit of such improvements shall be Type I even though Type II backfill is shown on the plans.

601.4.~~5~~ 7 Compaction Methods: Unless otherwise specified in the plans and/or special provisions, the backfill material shall be uniformly compacted using mechanical work methods. When allowed by the agency, consolidation by jetting is also an acceptable compaction method; however, testing requirements shall be increased (100% increase per lift). Care will be taken to prevent damage to or movement of the conduit by the compaction method or equipment used.

Water consolidation by jetting shall be accomplished with a 1 ½ inches pipe of sufficient length to reach the bottom of the lift being settled with adequate hose attached and a water pressure of not less than 30 psi. All jetting shall be accomplished transversely across the trench at intervals of not more than 6 feet with the jetting locations on one side of the trench offset to

Formatted: Font: Bold

Comment [WW11]: Discussion is to replace this with "Pipe". Pipe reps have concern that they do not want rock hard bedding.

Formatted: Highlight

Formatted: Highlight

Comment [WW12]: 5/30 revision

Formatted: Not Highlight

the jetting locations on the other side of the trench. The entire lift shall be leveled and completely saturated working from the top to the bottom.

When ~~J~~jetting ~~shall be~~ is used within the haunching and initial backfill zones, ~~as the consolidation method for all conduit bedding. T~~the Contractor shall be entirely responsible for establishing each lift depth so as to avoid floating the conduit being placed and shall make any repair or replacement at no cost to the Contracting Agency. However, for conduit larger than 24 inches I.D. the first lift shall not exceed the springline of the conduit and subsequent lifts shall not exceed 3 feet.

Flooding is not acceptable as a water consolidation method unless authorized in the specification or by a written change order. It will consist of the inundation of the entire lift with water and then puddle with poles or bars to insure saturation of the entire lift.

Where jetting or flooding is utilized and the surrounding material is such that it does not permit proper drainage, the Contractor shall provide, at his expense a sump and a pump at the downstream end to remove the accumulated water.

The use of water consolidation does not relieve the Contractor from the responsibility to make his own determination that such methods will not result in damage to existing improvements. The Contractor shall be responsible for any damage incurred.

If water consolidation is not successful, mechanical compaction methods shall be used to meet the compaction requirements. Backfill material may need to be removed and replaced.

~~Where water consolidation is not permitted or does not result in adequate compaction, the backfill material shall be compacted with hand and/or mechanical work methods using equipment such as rollers, pneumatic tamps, and hydro-hammers or other approved devices which secure uniform and required density without injury to the pipe or related structures.~~

Where Type I backfill is required, water consolidation ~~will not~~ shall only be permitted when the material in which the trench is located and the backfill are both ~~for non~~ granular material. ~~, except in the following situation. In a new development prior to paving and prior to opening the area to public traffic, water consolidation, will be permitted for non granular material at the Contractor's discretion and responsibility.~~

No exception shall be made for construction within new developments.

601.4.~~6~~ 8 Specifications for Granular Material: For purposes of this specification, granular material shall mean material for which the sum of the plasticity index and the percent of the material passing a No. 200 sieve shall not exceed 23. The plasticity index shall be tested in accordance with AASHTO T-146 Method A (Wet Preparation), T-89 and T-90.

601.4.~~7~~ 9 Rights-Of-Way Belonging to Others: Backfill and compaction for irrigation lines of the Salt River Valley Water Users' Association and Roosevelt Irrigation Districts and for trenches in State of Arizona and Maricopa County right-of-way outside the limits of the Contracting Agency shall be accomplished in accordance with their permit and/or specifications.

601.4.~~8~~ 10 Test Holes: Boring logs shown on the plans do not constitute a part of the contract and are included for the Contractor's convenience only. It is not intended to imply that the character of the material is the same as that shown on the logs at any point other than that where the boring was made. The Contractor shall satisfy himself regarding the character and amount of rock, gravel, sand, silt, clay and water to be encountered in the work to be performed.

601.4.~~9~~ 10 ~~Foundation and~~ Bedding and Backfilling for Electronic, Telephonic, Telegraphic, Electrical, Oil and Gas Lines: ~~Foundation and~~ The bedding and backfill for these underground facilities shall be native material or sand which conforms to the grading requirement of ASTM C33 for fine aggregate. When backfill material consists of aggregate base course, crushed stone, or other material containing stones, only sand will be used for foundation, and bedding. The ~~foundation~~ bedding depth shall be six inches and ~~bedding~~ backfill depth shall be one foot above the top of the facility. Compaction will be in accordance with Section 601.

601.5 CONTRACTOR CERTIFICATION OF INSTALLATION PROCEDURES:

When requested in the Special Provisions or by the Engineer prior to installation, the Contractor shall furnish to the Contracting Agency an affidavit (certification) from the pipe manufacturer (or his designee) stating that the Contractor is familiar with the manufacturer's suggested installation methods and procedures and the installation complies with those procedures and is consistent with MAG requirements.

Also, when required in the Special/Technical Provisions or requested by the Engineer, the pipe manufacturer or his designee will review the Contractor's methods and procedures for pipe installation in the field. The Contractor will make any

adjustments in the installation as recommended by the manufacturer or his representative. If necessary, the Contractor may be required to reinstall or provide corrections to pipe installed prior to the field review at no cost to the Agency. Once the manufacturer or his representative has reviewed the Contractor's installation methods and the Contractor has adjusted his installation methods as recommended by the same, the manufacturer or his representative shall furnish to the Contracting Agency an affidavit (certification) that the Contractor's installation methods and procedures, at the time of the review, complied with the manufacturer's installation practices. The affidavit must provide the name of the manufacturer's representative witnessing the pipe installation.

Comment [WW13]: Considering removal or moving to install specs?

601.6 PAVEMENT REPLACEMENT AND SURFACE RESTORATION:

601.6.1 Grading: The Contractor shall do such grading in the area adjacent to backfilled trenches and structures as may be necessary to leave the area in a neat and satisfactory condition approved by the Engineer.

601.6.2 Restoring Surface: All streets, alleys, driveways, sidewalks, curbs, or other surfaces, in which the surface is broken into or damaged by the installation of the new work, shall be resurfaced in kind or as specified to the satisfaction of the Engineer in accordance with Section 336.

601.6.3 Cleanup: The job site shall be left in a neat and acceptable condition. Excess soil, concrete, etc., shall be removed from the premises.

601.6.4 Temporary Pavement: The Contractor shall install temporary asphalt pavement or the first course of permanent pavement replacement in accordance with Section 336 immediately following backfilling and compaction of trenches that have been cut through existing pavement. Except as otherwise provided in Section 336, this preliminary pavement shall be maintained in a safe and reasonably smooth condition until required backfill compaction is obtained and final pavement replacement is ordered by the Engineer. Temporary paving removed shall be hauled from the job site and disposed of by the Contractor at no additional cost to the Contracting Agency.

601.7 PAYMENT:

No pay item will be included in the proposal, nor direct payment made for trench excavation, backfilling, compaction, or placement of temporary pavement. The cost of these features of the work shall be included in the unit price per linear foot for furnishing and laying pipe.

- End of Section -

Case 13-15 revisions 08-6-14

SECTION 603

FLEXIBLE PIPE TRENCH EXCAVATION, BACKFILLING AND COMPACTION

Formatted: Font: Bold

603.1 DESCRIPTION:

The work covered by this specification consists of furnishing all plant, labor, equipment, appliances and materials, and performing all operations in connection with the trench excavation, backfilling and compaction for a single flexible pipe installation in accordance with the plans and special provisions. Pipe materials that are considered to be flexible include thermoplastic pipes and corrugated metal pipe and arches. See Section 601 for rigid pipe trench excavation, backfilling and compaction.

For the purpose of this specification, flexible pipe shall include 8 inches through 120 inches nominal diameter.

The Trench Cross-Section Detail shown on Detail 200-2 illustrates the terminology used in this specification.

See Section 615 for sewer line construction procedures.

See Section 618 for storm drain construction procedures.

HDPE pipe and fittings shall conform to Section 738. SRPE pipe and fittings shall conform to Section 739. Polypropylene pipe and fittings shall conform to Section 740. PVC pipe and fittings shall conform to Section 745. Corrugated metal pipe and arches shall conform to Section 760.

Excavation for appurtenance structures, such as manholes, inlets, transition structures, junction structures, vaults, valve boxes, catch basins, etc., shall be deemed to be in the category of trench excavation.

See Section 602 for trenchless installations.

603.2 EXCAVATION:

601.2.1 General: The Contractor shall perform all excavation of every description and of whatever substances encountered, to the depths indicated on the plans, and including excavation ordered by the Engineer of compacted backfill for the purpose of making density tests on any portion of the backfill.

All excavation shall be open cut unless otherwise shown on the plans or approved by the Engineer.

603.2.2 Trench Widths: Trenches for flexible pipe~~ other than profile HDPE pipe, meeting ASTM F894,~~ shall conform to the dimensions in Table 603-1, unless otherwise specified in the special provisions, indicated on the plans, and/or approved by the Engineer. ~~Trench widths for profile HDPE pipe, meeting ASTM F894, will be designed by the Engineer and included on the plans or in the special provisions.~~

Table 603-1		
FLEXIBLE PIPE – TRENCH WIDTHS		
Size of Pipe (Nom. Dia.)	**Maximum Width At Top Of Pipe Greater Than O.D. Of Barrel**	**Minimum Width At Springline Each Side of Pipe (1)**
Less than 18 inches	20 inches	8 inches
18 inches to 24 inches inclusive	23 inches	9.5 inches
27 inches to 36 inches inclusive	28 inches	12 inches
42 inches to 60 inches inclusive	34 inches	14 inches
66 inches to 78 inches inclusive	44 inches	16 inches
84 inches to 96 inches inclusive	48 inches	18 inches
102 inches to 120 inches inclusive	54 inches	21 inches

(1) When the specified compaction cannot be obtained in the haunch area and/or initial backfill zone, the Contractor shall make necessary changes in his methods and/or equipment to obtain the desired results. In some

instances, the Minimum Width at springline shall be adjusted wider to assist the Contractor in obtaining the compaction. The Engineer must be satisfied with the Contractor's compaction effort, concur with the change and approve the revised distance. There shall be no additional cost to the Agency for the extra trench width.

For multiple pipe installations in a single trench, the Engineer shall provide details on the plans or in the Special/Technical Provisions as to the layout, pipe configuration, distances between pipes and trench walls, the type of backfill and bedding materials, etc.

The width of the trench shall not be greater than the maximum indicated in Table 603-1, at and below the level of the top of the pipe. The width of the trench above that level may be made as wide as necessary for sheeting and bracing, and for proper installation of the work.

If the maximum trench width as specified in Table 603-1 is exceeded at the top of the pipe the Contractor shall provide, at no additional cost to the Contracting Agency, the necessary additional load bearing capacity by means of ~~bedding~~initial backfill, having a higher bedding factor than that specified, higher strength pipe, a concrete cradle, cap or encasement, or by other means approved in writing by the Engineer. Where safety or undermining situations occur, a CLSM backfill may be used as needed.

Comment [WW1]: See 601 notes.

Formatted: Not Highlight

603.2.3 Trench Grade: Alignment and elevation stakes shall be furnished the Contractor at set intervals and agreed upon offsets. On water main projects, elevation stakes will be furnished only when deemed necessary by the Engineer. In all cases where elevation stakes are furnished, the Engineer will also furnish the Contractor with cut sheets.

For all pipe 12 inches or greater in diameter, the Contractor shall excavate for and provide an initial granular bedding at least 4 inches thick or 1/12 the O.D. of the pipe whichever is greater. This bedding material shall be placed at a uniform density with specified ~~minimum~~ compaction and fine graded as specified below.

Bell or coupling holes shall be dug after the trench bottom has been graded. Such holes shall be of sufficient width to provide ample room for caulking, banding, or bolting. Holes shall be excavated only as necessary to permit accurate work in the making of the joints and to insure that the pipe will rest upon the prepared bottom of the trench, and not be supported by any portion of the joint.

Depressions for joints, other than bell-and-spigot, shall be made in accordance with the recommendations of the joint manufacturer for the particular joint used.

603.2.4 Fine Grading: Unless otherwise specified in the plans and/or special provisions, the bottom of the trench shall be accurately graded to provide uniform bearing and support for each section of the pipe at every point along its entire length, except for portions of the pipe where it is necessary to excavate for bells and for proper sealing of the pipe joints.

603.2.5 Overexcavation: Except at locations where excavation of rock from the bottom of the trench is required, care shall be taken not to excavate below the depth indicated.

Unauthorized excavation below the specified grade line shall be refilled at the Contractor's expense with ABC material compacted to a uniform density of not less than 95 percent of the maximum density as determined by AASHTO T-99 and T-191 or ASTM D6938. When AASHTO T-99, method A or B, and T-191 are used for density determination, ARIZ 227c will be used for rock correction.

Whenever bedrock is encountered in the trench bottom, it shall be overexcavated to a minimum depth of six inches below the O.D. of the pipe. This overexcavation shall be filled with granular material placed with the minimum possible compaction.

Whenever unsuitable soil incapable of supporting the pipe is encountered, the Contractor will notify the Engineer and a field determination will be made as to the depth of overexcavation and the granular fill required.

603.2.6 Excavation for Manholes, Valves, Inlets, Catch Basins and Other Accessories: The Contractor may excavate to place the concrete structure directly against the excavated surface, provided that the faces of the excavation are firm and unyielding and are at all points outside the structure lines shown on the plans. If the native material is such that it will not stand without sloughing or if precast structures are used, the Contractor shall overexcavate to place the structure and this overexcavation shall be backfilled with the same material required for the adjoining pipe line trench and compacted per Table

603-2.

Any unnecessary excavation below the elevation indicated for the foundation of any structure shall be replaced with the same class of concrete specified for the structure or with 1 ½ sack controlled low strength material as specified in Section 728. When the replacement material is structural concrete, the material shall be placed at the same time as the structure. However, when using 1 ½ sack controlled low strength material, placement of the material shall be per Section 604 which will require a time lag between the material and the structural concrete. The placement of the additional material shall be at no cost to the Agency.

603.2.7 Pavement and Concrete Cutting and Removal: Where trenches lie within the Portland cement concrete section of streets, alleys, driveways, or sidewalks, etc., such concrete shall be sawcut to neat, vertical, true lines in such a manner that the adjoining surface will not be damaged. The minimum depth of cut shall be 1 ½ inches or 1/4 of the thickness, whichever is greater.

Asphalt pavement shall be clean-cut, with approved equipment and by approved methods in accordance with the requirements of Section 336.

No ripping or rooting will be permitted outside limits of cuts. Surfacing materials removed shall be hauled from the job site immediately, and will not be permitted in the backfill.

See Detail 200-1 and 200-2 for further requirements.

603.2.8 Grading and Stockpiling: All grading in the vicinity of trench excavation shall be controlled to prevent surface water from flowing into the trenches. Any water accumulated in the trenches shall be removed by pumping or by other approved methods.

During excavation, material suitable for backfilling shall be piled in an orderly manner, a sufficient distance back from the edges of trenches, to avoid overloading and to prevent slides or cave-ins. Material unsuitable for backfilling, or excess material, shall be hauled from the job site and disposed of by the Contractor.

The Contractor shall, prior to ~~final acceptance~~commencement -of the work, submit a letter to the Contracting Agency stating the location of each disposal site for all excess or unsuitable material and certify that he has obtained the property owner's permission for the disposal of all such materials.

Where the plans and/or special provisions provide for segregation of topsoil from underlying material for purposes of backfill, the material shall not be mixed.

603.2.9 Shoring and Sheeting: The Contractor shall do such trench bracing, sheathing, or shoring necessary to perform and protect the excavation as required for safety and conformance to governing laws. The bracing, sheathing, or shoring shall not be removed in one operation but shall be done in successive stages as determined by the Engineer to prevent overloading of the pipe during backfilling operations. The cost of the bracing, sheathing, or shoring, and the removal of same, shall be included in the unit price for the pipe.

All shoring and sheeting deemed necessary to protect the excavation and to safeguard employees, shall be installed. See Section 107.

603.2.10 Open Trench: Except where otherwise noted in the special provisions, or approved in writing by the Engineer, the maximum length of open trench, where the construction is in any stage of completion (excavation, pipe laying or backfilling), shall not exceed 1320 feet in the aggregate at any one location.

Any excavated area shall be considered open trench until all ABC for pavement replacement has been placed and compacted. With the approval of the Engineer, pipe laying may be carried on at more than one separate location, the restrictions on open trench applying to each location. Trenches across streets shall be completely backfilled as soon as possible after pipe laying.

Substantial steel plates with adequate trench bracing shall be used to bridge across trenches at street crossings where trench backfill and temporary patches have not been completed during regular work hours. Steel plates shall be installed in accordance with Detail 211. Safe and convenient passage for pedestrians shall be provided. The Engineer may designate a passage to be provided at any point he deems necessary. Access to hospitals, fire stations and fire hydrants must be

maintained at all times.

603.3 PROTECTION OF EXISTING UTILITIES:

603.3.1 Utilities: Unless otherwise shown on the plans or stated in the specifications, all utilities, either underground or overhead, shall be maintained in continuous service throughout the entire contract period. The Contractor shall be responsible and liable for any damages to or interruption of service caused by the construction.

If the Contractor desires to simplify his operation by temporarily or permanently relocating or shutting down any utility or appurtenance, he shall make the necessary arrangements and agreements with the owner and shall be completely responsible for all costs concerned with the relocation or shutdown and reconstruction. All property shall be reconstructed in its original or new location as soon as possible and to a condition at least as good as its previous condition. This cycle of relocation or shutdown and reconstruction shall be subject to inspection and approval by both the Engineer and the owner of the utility.

The Contractor shall be entirely responsible for safeguarding and maintaining all conflicting utilities that are shown on the plans (Sections 107 and 105 apply). This includes overhead wires and cables and their supporting poles whether they are inside or outside of the open trench. If, in the course of work, a conflicting utility line that was not shown on the plans is discovered, the Contracting Agency will either negotiate with the owner for relocation, relocate the utility, change the alignment and grade of the trench or as a last resort, declare the conflict as "extra work" to be accomplished by the Contractor in accordance with Section 104.

603.3.2 Irrigation Ditches, Pipes and Structures: The Contractor shall contact the owners of all irrigation facilities, and make arrangements for necessary construction clearances and/or dry-up periods.

All irrigation ditches, dikes, headgates, pipe, valves, checks, etc., damaged or removed by the Contractor, shall be restored to their original condition or better, by the Contractor at no additional cost to the Contracting Agency.

603.3.3 Building, Foundations and Structures: Where trenches are located adjacent to building, foundations, and structures, the Contractor shall take all necessary precaution against damage to them. The Contractor shall be liable for any damage caused by the construction.

Except where authorized in the special provisions or in writing by the Engineer, water settling of backfill material in trenches adjacent to structures will not be permitted.

603.3.4 Permanent Pipe Supports: Permanent pipe supports for the various types and sizes of sewer, water and utility lines shall conform to the Standard Details or the details shown on the plans. Such pipe supports shall be erected at the locations shown on the plans and/or at any other locations as necessary as determined by the Engineer.

~~**603.3.5 Electronic, Telephonic, Telegraphic, Electrical, Oil and Gas Lines:** These underground facilities shall be adequately supported by the Contractor. Support for plastic pipes shall be continuous along the bottom of the pipe. Support for metal pipe and electrical conduit may be continuous or nylon webbing may be used for suspension at no greater than ten-foot intervals.~~

~~The Contractor shall avoid damaging the plastic pipe, pipeways or conduits during trench backfilling and during foundation and bedding placement.~~

~~There will be no measurement or payment for this work. The Contractor will include all associated costs in the unit price for the conduit installation.~~

Comment [WW2]: See 601comments

603.4 FOUNDATION, BEDDING, HAUNCHING, BACKFILLING AND COMPACTION:

603.4.1 Foundation: The native or prepared material (when required) upon which the bedding material is placed.

603.4.~~1~~ 2 Bedding: The material upon which the conduit or structure is to be placed shall be accurately finished to the grade or dimensions shown on the plans or as directed by the Engineer. The bottom portion of the trench shall be brought to grade so that the conduit or structure will be continuously in contact with the material on which it is being placed. If rocky or unsuitable soil is encountered, Subsection 603.2.5 applies.

Unless otherwise specified in the project plans or project specifications, the minimum material type shall be A.B.C. per Section 702.

603.4.~~2~~ 3 Haunching: The material placed between the bedding and springline shall be constructed using the specified material and compacted for the full length of the pipe so as to distribute the load-bearing reaction uniformly to the bedding. If placed in lifts, the thickness shall not exceed 1 foot and shall be deposited and compacted to the specified density uniformly on each side of the pipe to prevent lateral displacement of the pipe. Compaction requirements shall be per Section 603.4.6.

The moisture content shall be such that the specified compaction can be obtained. ~~Extreme care will be taken to prevent damage to or movement of the conduit by the compaction equipment.~~

Unless otherwise specified in the project plans or project specifications, the minimum material type shall be A.B.C. per Section 702. With agency approval, native or CLSM may be used as an option.

603.4.~~3~~ 4 Initial Backfill: The material placed between the springline to 12 inches above top of pipe (minimum) shall be placed in lifts the height of which shall not exceed 1 foot or that which can be effectively compacted depending on the type of material, type of equipment and methods used. Extreme care will be taken to prevent damage to or movement of the conduit by the compaction equipment. Compaction requirements shall be per Section 603.4.6.

The moisture content shall be such that the specified compaction can be obtained.
~~backfill shall be placed in lifts the height of which shall not exceed that which can be effectively compacted depending on the type of material, type of equipment and methods used, and under no circumstances shall exceed 4 feet. Extreme care will be taken to prevent damage to or movement of the conduit by the compaction equipment.~~
Unless otherwise specified in the project plans or project specifications, the minimum material type shall be A.B.C. per Section 702. With agency approval, native or CLSM may be used as an option.

Backfill, around utilities that are exposed during trench excavation, shall be placed in accordance with the bedding methods.

603.4.~~4~~ 5 Final Backfill: The material placed above the initial backfill shall be placed in lifts the height of which shall not exceed 2 feet or that which can be effectively compacted depending on the type of material, type of equipment and methods used. Compaction requirements shall be per Section 601.4.6. All backfill shall be constructed per Detail 200-1 with the type of replacement noted on the plans or in the special provisions. Unless otherwise noted, backfill under single curb, curb and gutter, sidewalk, driveways, valley gutters, etc. shall be the same as the adjacent street pavement.

~~Backfill shall be placed in lifts the height of which shall not exceed that which can be effectively compacted depending on the type of material, type of equipment and methods used, and under no circumstances shall exceed 4 feet.~~

603.4.~~5~~ 6 Compaction Densities: Unless otherwise provided in the plans and/or special provisions, the trench backfill shall be thoroughly compacted to not less than the densities in Table 603-2 when tested and determined by AASHTO T-99 and T-191 or ASTM D6938. When AASHTO T-99, method A or B, and T-191 are used for density determination, ARIZ-227c will be used for rock correction. All compaction discussed within this section shall be performed within 2 percentage points of optimum moisture content unless otherwise noted in the project plans or project specifications.

The density required will depend on the Type shown on the plans and/or called for in the special provisions. Density required for each type shall comply with Table 603-2.

TABLE ~~601~~603-2				
MINIMUM TRENCH COMPACTION DENSITIES				
Backfill Type	**Location**	**From Surface To 2 feet Below Surface**	**From 2 feet Below Surface To 1 foot Above Top of Pipe**	**From 1 foot Above Top of Pipe to Bottom of ~~Trench~~Pipe**

Comment [WW3]: 4/29 revision from "granular".

Comment [WW4]: Working group perspective that 1 foot for flexible pipes is more appropriate.

Comment [WW5]: See above comment.

Comment [WW6]: 4/29 revision from "granular".

Comment [WW7]: Discussion is to replace this with "Pipe". Pipe reps have concern that they do not want rock hard bedding.

I	Under any existing or proposed pavement, curb, gutter, attached sidewalk, roadway shoulders, and other areas within right-of-way subject to vehicular traffic~~or such construction included in the contract~~, or when any part of the trench excavation is within 2-feet of the existing pavement, curb, or gutter~~above~~.	100% for granular 95% for non-granular	~~90~~95%	~~90~~95%
II	On any utility easement ~~street, road~~ or ~~alley~~ right-of-way outside limits of Type I backfill.~~(I).~~	~~85~~95%	~~85~~95%	~~90~~95%
III	Around any structures (manholes, etc.) or exposed utilities.	95% for A.B.C., 100% for native~~in all cases~~ or CLSM		

Comment [WW8]: 5/30 revision

Note: The type required will generally be shown on the plans and the plans will govern. Where no type is shown on the plans, the type shall comply with Table 603-2.

A consideration in determining the backfill Types as shown on the plans, is based on the trench widths as shown in the Contract Documents. If these trench widths increase beyond those widths referred to above and fall within the 2-foot limit of paved surfaces and other improvements due to construction exigencies, the backfill designation for that portion within the 2-foot limit of such improvements shall be Type I even though Type II backfill is shown on the plans.

603.4.~~6~~ 7 Compaction Methods: Unless otherwise specified in the plans and/or special provisions, the backfill material shall be uniformly compacted using mechanical work methods. When allowed by the agency, consolidation by jetting is also an acceptable compaction method; however, testing requirements shall be increased (100% increase per lift). Care will be taken to prevent damage to or movement of the conduit by the compaction method or equipment used.

Water consolidation by jetting shall be accomplished with a 1 ½ inches pipe of sufficient length to reach the bottom of the lift being settled with adequate hose attached and a water pressure of not less than 30 psi. All jetting shall be accomplished transversely across the trench at intervals of not more than 6 feet with the jetting locations on one side of the trench offset to the jetting locations on the other side of the trench. The entire lift shall be leveled and completely saturated working from the top to the bottom.

When jetting is used within the haunching and initial backfill zones, the Contractor shall be entirely responsible for establishing each lift depth so as to avoid floating the conduit being placed and shall make any repair or replacement at no cost to the Contracting Agency. However, for conduit larger than 24 inches I.D. the first lift shall not exceed the springline of the conduit and subsequent lifts shall not exceed 3 feet.

Flooding is not acceptable as a water consolidation method unless authorized in the specification or by a written change order. It will consist of the inundation of the entire lift with water and then puddle with poles or bars to insure saturation of the entire lift.

Where jetting or flooding is utilized and the surrounding material is such that it does not permit proper drainage, the Contractor shall provide, at his expense a sump and a pump at the downstream end to remove the accumulated water.

The use of water consolidation does not relieve the Contractor from the responsibility to make his own determination that such methods will not result in damage to existing improvements. The Contractor shall be responsible for any damage incurred.

If water consolidation is not successful, mechanical compaction methods shall be used to meet the compaction requirements. Backfill material may need to be removed and replaced. No exception shall be made for construction within new developments.

Where Type I backfill is required, water consolidation shall only be permitted when the material in which the trench is located and the backfill are both granular material.

603.4.~~7~~ 8 Specifications for Granular Material: For purposes of this specification, granular material shall mean material for which the sum of the plasticity index and the percent of the material passing a No. 200 sieve shall not exceed 23. The plasticity index shall be tested in accordance with AASHTO T-146 Method A (Wet Preparation), T-89 and T-90.
~~Coarse aggregate shall consist of crushed rock as defined in Section 701.2 with 100 percent of the specified size of aggregate having one fractured face tested in accordance with ARIZ 212, and having the gradation complying with ASTM D448, Table 1, Size Numbers 6, 67, 68, 7, 78, or 8 as recommended by the Engineer. The gradation size number to be furnished shall be shown on the plans or in the project specifications.~~

603.4.~~8~~ 9 Rights-Of-Way Belonging to Others: Backfill and compaction for irrigation lines of the Salt River Valley Water Users' Association and Roosevelt Irrigation Districts and for trenches in State of Arizona and Maricopa County right-of-way outside the limits of the Contracting Agency shall be accomplished in accordance with their permit and/or specifications.

603.4.~~9~~ 10 Test Holes: Boring logs shown on the plans do not constitute a part of the contract and are included for the Contractor's convenience only. It is not intended to imply that the character of the material is the same as that shown on the logs at any point other than that where the boring was made. The Contractor shall satisfy himself regarding the character and amount of rock, gravel, sand, silt, clay and water to be encountered in the work to be performed.

603.4.~~10~~ 11 Bedding and Backfilling for Electronic, Telephonic, Telegraphic, Electrical, Oil and Gas Lines: The bedding and backfill for these underground facilities shall be native material or sand which conforms to the grading requirement of ASTM C33 for fine aggregate. When backfill material consists of aggregate base course, crushed stone, or other material containing stones, only sand will be used for foundation, and bedding. The bedding depth shall be six inches and backfill depth shall be one foot above the top of the facility. Compaction will be in accordance with Section 603.

603.5 CONTRACTOR CERTIFICATION OF INSTALLATION PROCEDURES:

When requested in the Special Provisions or by the Engineer prior to installation, the Contractor shall furnish to the Contracting Agency an affidavit (certification) from the pipe manufacturer (or his designee) stating that the Contractor is familiar with the manufacturer's suggested installation methods and procedures and the installation complies with those procedures and is consistent with MAG requirements.

Also, when required in the Special/Technical Provisions or requested by the Engineer, the pipe manufacturer or his designee will review the Contractor's methods and procedures for pipe installation in the field. The Contractor will make any adjustments in the installation as recommended by the manufacturer or his representative. If necessary, the Contractor may be required to reinstall or provide corrections to pipe installed prior to the field review at no cost to the Agency. Once the manufacturer or his representative has reviewed the Contractor's installation methods and the Contractor has adjusted his installation methods as recommended by the same, the manufacturer or his representative shall furnish to the Contracting Agency an affidavit (certification) that the Contractor's installation methods and procedures, at the time of the review, complied with the manufacturer's installation practices. The affidavit must provide the name of the manufacturer's representative witnessing the pipe installation.

Comment [WW9]: Considering removal or moving to install specs?

603.6 PAVEMENT REPLACEMENT AND SURFACE RESTORATION:

603.6.1 Grading: The Contractor shall do such grading in the area adjacent to backfilled trenches and structures as may be necessary to leave the area in a neat and satisfactory condition approved by the Engineer.

603.6.2 Restoring Surface: All streets, alleys, driveways, sidewalks, curbs, or other surfaces, in which the surface is broken into or damaged by the installation of the new work, shall be resurfaced in kind or as specified to the satisfaction of the Engineer in accordance with Section 336.

603.6.3 Cleanup: The job site shall be left in a neat and acceptable condition. Excess soil, concrete, etc., shall be removed from the premises.

603.6.4 Temporary Pavement: The Contractor shall install temporary asphalt pavement or the first course of permanent pavement replacement in accordance with Section 336 immediately following backfilling and compaction of trenches that have been cut through existing pavement. Except as otherwise provided in Section 336, this preliminary pavement shall be maintained in a safe and reasonably smooth condition until required backfill compaction is obtained and final pavement replacement is ordered by the Engineer. Temporary paving removed shall be hauled from the job site and disposed of by the Contractor at no additional cost to the Contracting Agency.

603.7 PAYMENT:

No pay item will be included in the proposal, nor direct payment made for trench excavation, backfilling, compaction, or placement of temporary pavement. The cost of these features of the work shall be included in the unit price per linear foot for furnishing and laying pipe.

- End of Section -

Case 13-15 revisions 03-12-14

SECTION 615

SEWER LINE CONSTRUCTION

Field Code Changed

615.1 DESCRIPTION:

The construction or extension of sewer lines shall conform to the applicable standard specifications and details, except as otherwise required on the plans or as modified in the special provisions.

~~Concrete pipe shall conform to Section 735. High density polyethylene (HDPE) pipe shall conform to Section 738. Vitrified clay pipe shall conform to Section 743. Polyvinylchloride (PVC) pipe and fittings shall conform to Section 745.~~

615.2 MATERIALS:

Pipe used for sewer line construction, including specials, joints, and gaskets, shall be according to the following Sections, or as modified by the special provisions.

- Reinforced Concrete Pipe (RCP), see Section 735
- High Density Polyethylene (HDPE) Pipe, see Section 738
- Steel Reinforced Polyethylene (SRPE) Pipe, see Section 739
- Polypropylene Pipe, see Section 740
- Vitrified Clay Pipe (VCP), see Section 743
- Polyvinylchloride (PVC) Pipe, see Section 745

Formatted: List Paragraph, Bulleted + Level: 1 + Aligned at: 0.25" + Indent at: 0.5"

Formatted: List Paragraph, Bulleted + Level: 1 + Aligned at: 0.25" + Indent at: 0.5"

615.2 TRENCHING:

Trench excavation shall be accomplished in accordance with Sections 601 for rigid pipe and 603 for flexible pipe, except as specified below, or as modified by special provisions. ~~Excavation of trenches shall be accomplished in accordance with Sections 601, and 603 for HDPE pipe.~~

The Engineer shall furnish the Contractor alignment and elevation stakes at agreed-upon intervals and offset together with cut sheets showing the difference in elevation from the top of the stakes to the flow line of the pipe.

The trench shall be dry when the fine grading of the bottom of the trench is accomplished. Before placement of pipe the fine grade shall be carefully checked by use of a string line, laser beam, or other means so that when in final position the pipe will be true to line and grade, ±0.05 feet for 8 inches through 12 inches, ±0.10 feet for 15 inches and larger.

~~For PVC pipe installation the width of trench as listed in Table 601-1 or as given in the contract documents may be increased to provide sufficient space for the installation of fittings or for compaction of the bedding. For HDPE pipe installation, the width of the trench will be per Subsection 603.2. The adjusted maximum width at the top of the pipe must be approved by the Engineer. The adjustment of the trench width to accomplish the above shall be done at no additional cost to the Contracting Agency.~~

Comment [WW1]: I don't think this is needed with the new 603-1 table????

615.3 SEPARATION:

To protect water lines from contamination by sewer lines, separation and extra protection shall be in accordance with Section 610.

Sewer lines that are constructed of ductile iron pipe for extra protection shall be internally lined for sewer service.

615.4 LAYING PIPE:

Pipe shall be of the type, class, and size called for on the plans. All pipe shall be protected during handling against impact shocks and free falls. No damaged or defective pipe shall be installed in the work. Pipe shall be kept clean at all times, and as the work progresses, the interior of the pipe shall be cleared of all dirt and superfluous materials of every description.

The laying of the pipe shall be in finished trenches free from water or debris, and shall be commenced at the lowest point, with the spigot ends pointing in the direction of the flow. Each pipe shall be laid firmly and true to line and grade, in such manner as to form a close concentric joint with the adjoining pipe and to prevent sudden offsets of the flowline. Any adjustment to line and grade shall be made by scraping away or filling in under the body of the pipe, never by wedging or

blocking under the pipe ends.

The alignment and grade of each length of pipe shall be checked after setting by measurement from the string line, laser beam target or other means approved by the Engineer.

At all times when work is not in progress, open ends of the pipe and fittings shall be securely closed to the satisfaction of the Engineer, so that no water, earth or other substance will enter the pipe or fittings.

~~HDPE and PVC pipe and fittings shall be installed in accordance with ASTM D2321. HDPE pipe bedding shall comply with Subsection 603.4. The PVC pipe bedding shall be placed in two lifts. The first lift will be from the bottom of the trench to the spring line of the pipe. The second lift will be from the spring line to one foot above the top of pipe. Separate inspections will be required on each lift. The Contractor shall place the first lift in a manner that will insure uniform support under the haunches and proper alignment of the pipe.~~

Comment [WW2]: This is covered by new 603.

SECTION 615

615.5 FITTINGS:

All fittings shall conform to the requirements of the pipe specifications and shall be located as shown on the plans, or as directed by the Engineer, in accordance with the standard details.

615.6 JOINTING:

615.6.1 Rubber Gasket Joints: Prior to making pipe joints, all surfaces of the portions of the pipes to be joined shall be cleaned, dried, and prepared in accordance with the manufacturer's recommendations. The joints shall then be carefully centered and completed.

Trenches shall be kept water-free during the installation of joints and couplings.

The joint and coupling materials will be as specified in the appropriate pipe sections and shall be installed in accordance with the manufacturer's recommendations. Cement mortar joints will NOT be permitted in sanitary sewer construction.

615.6.2 Water Stops: Water stops will be required when connecting PVC or HDPE pipe to concrete structures, manholes, etc. The water stop shall comply with Section 738 and will be installed per manufacturer recommendations.

615.7 SANITARY SEWER SERVICE TAPS:

When the construction of sanitary sewer service taps are called for in the special provisions, they shall be constructed in accordance with standard details for sewer taps except for HDPE pipe.

To maintain structural integrity of the pipe, service taps for HDPE pipe shall be constructed in accordance with the manufacturer's recommendations.

When any damage occurs to the pipe ribs or walls, outside of the tap area, the Contractor shall perform repairs, as recommended by the manufacturer at no cost to the Contracting Agency. Damage to the pipe will include but not be limited to gouging, marring, and scratching forming a clear depression in the pipe.

The locations of the service tap for each property shall be in the downstream ⅓ of the lot, or as requested by the property owner. Sewer service taps shall not be covered until they have been plugged and marked in accordance with standard details and their location has been recorded by the Engineer. Electronic markers shall be placed at no greater depth than electronic locating devices can locate them (typically 2'-4').

615.8 SANITARY SEWER CLEANOUTS:

The cleanouts shall be constructed at locations shown on the plans, in accordance with the standard details for cleanouts.

615.9 MANHOLES:

Manholes shall be constructed to conform with the requirements of Sections 625, Section 505 and standard details.

615.10 BACKFILLING:

Backfilling, and compaction shall be accomplished in accordance with Sections 601 for rigid pipe and 603 for flexible pipe, except as specified below, or as modified by special provisions. ~~Backfilling and compaction shall be done in accordance with Sections 601 and 603, for HDPE pipe.~~

615.11 INSPECTION AND TESTING: Testing and inspection shall be in accordance with Section 611.

~~Pressure testing of force mains shall be done in accordance with Section 610.15.~~

~~Sewers and pipe lines shall be subject to acceptance testing after backfilling has been completed but prior to the placement of the finished surface material.~~

SECTION 615

~~The Contracting Agency reserves the right to require testing of the entire installation. Cost of repairs or corrections necessary to conform to the following testing requirements will be borne by the Contractor at no additional cost to the Contracting Agency.~~

~~(A) Low Pressure Air Test:~~

~~Testing will be accomplished by the means of "Low Pressure Air Testing." Tests may be conducted by the Contractor or an independent testing firm. However, acceptance tests shall be made only in the presence of the Engineer.~~

~~Test Procedure:~~

~~(1) Before testing, the pipe shall be thoroughly cleaned.~~
~~(2) The Contractor shall seal off the section of pipe to be tested at each manhole connection. Test plugs must be securely braced within the manholes.~~
~~(3) A minimum of two connecting hoses to link the air inlet test plug with an above ground test monitoring panel must be provided.~~

~~(a) One hose is to induce air through the test plug and into the test chamber.~~
~~(b) The second hose is for the purpose of monitoring the test pressure from within the enclosed pipe.~~

~~(4) UNDER NO CIRCUMSTANCES ARE WORKERS TO BE ALLOWED IN THE CONNECTING MANHOLES WHILE A PRESSURE TEST IS BEING CONDUCTED.~~
~~(5) Add air slowly into the test section. After an internal pressure of 4.0 psi is obtained, allow internal air temperature to stabilize.~~
~~(6) After stabilization period, adjust the internal air pressure to 3.5 psi, disconnect the air supply and begin timing the test.~~
~~(7) Refer to Table §615-1 to determine the length of time (minutes) the section under test must sustain while not losing in excess of 1 psi as monitored by the test gauge. If the section of line to be tested includes more than one pipe size, calculate the test time for each size and add the test times to arrive at the total test time for the section.~~
~~(8) Sections so determined to have lost 1 psi or less during the test period will have passed the leakage test. Those sections losing in excess of 1 psi during the test period will have failed the leakage test.~~
~~(9) Appropriate repairs must then be completed and the line retested for acceptance.~~

~~TABLE 615-1~~			
~~SANITARY SEWER AIR TEST~~			
~~Minimum Test Time for Various Pipe Sizes*~~			
~~Nominal Pipe Size, in.~~	~~T (time), min/100 ft~~	~~Nominal Pipe Size, in.~~	~~T (time), min/100 ft.~~
~~3~~	~~0.2~~	~~21~~	~~3.0~~
~~4~~	~~0.3~~	~~24~~	~~3.6~~
~~6~~	~~0.7~~	~~27~~	~~4.2~~
~~8~~	~~1.2~~	~~30~~	~~4.8~~
~~10~~	~~1.5~~	~~33~~	~~5.4~~
~~12~~	~~1.8~~	~~36~~	~~6.0~~
~~15~~	~~2.1~~	~~39~~	~~6.6~~
~~18~~	~~2.4~~	~~42~~	~~7.3~~

~~* The time has been established using the formulas contained in ASTM C828, Appendix.~~

~~(B) Hydrostatic Test:~~

~~Exfiltration Testing (water):~~

~~Sanitary sewer testing by means of exfiltration should only be considered when low pressure air testing cannot be used and only with the approval of the Engineer.~~

~~Testing Procedure:~~
~~(1) The Contractor shall furnish all equipment for testing.~~

~~(2) Seal off the downstream end of the line and fill with water to a minimum head of 4 feet in a stand pipe at the high end.~~
~~(3) A period of at least one hour will be allowed for absorption time before making the test.~~
~~(4) A suitable meter or method of measuring the quantity of water used is necessary.~~
~~(5) The allowable water loss for sanitary sewers shall not exceed 0.158 gallons per hour per 100 feet of pipe per inch of diameter of pipe under a minimum test head of 4 feet above the top of the pipe at the upper end.~~

~~(C) Deflection Test for HDPE and PVC Pipe:~~

~~In addition to the tests prescribed above, the Contractor shall perform a deflection test on the system as directed by the Engineer. Any part of the installation which shows deflection in excess of 5% of the nominal inside diameter per Section 738 for HDPE pipe or in excess of 5% of the average inside diameter per ASTM D3034 for PVC pipe, shall be corrected.~~

~~After acceptance but prior to the termination of the warranty period, the Contracting Agency may test the long term deflection of the sewer. If the Contracting Agency determines that the deflection has exceeded 7 ½% of the average inside diameter, that portion of the installation shall be corrected by the Contractor at no cost to the Contracting Agency.~~

~~(D) Closed Circuit T.V. Inspection:~~

~~The Contracting Agency reserves the right to visually inspect the interior of the sewer line using a television camera. Any defects in the pipe or construction methods revealed shall be corrected by the Contractor at no additional cost to the Contracting Agency.~~

~~The Contracting Agency will pay for the initial T.V. inspection. Any additional inspection(s) required, due to the failure of the initial inspection, shall be paid for by the Contractor.~~

Comment [WW3]: Moved to new Testing Section 611

615.12 PAVEMENT AND SURFACING REPLACEMENT:

Pavement and surfacing replacement shall be done in accordance with Section 336.

615.13 CLEANUP:

The Engineer has the right to close down forward trenching and pipe laying where testing, backfill, compaction and cleanup does not follow in an orderly manner.

615.14 MEASUREMENT AND PAYMENT:

(A) Sewer Pipe and Fittings: ~~(Vitrified clay, cast iron and other approved types of pipe.)~~

Measurement will be made horizontally through manholes and fittings and from centerline to centerline of structures, for the various types and sizes of pipe called for on the plans and in the proposal.

Payment for the various sizes and types of pipe will be made at the unit price bid per linear foot, and shall be compensation in full for furnishing and installing the pipe and fittings complete in place, as specified, including excavation, removal of obstructions, backfilling, water settling, compaction, sheeting and bracing, testing, and all incidental work not specifically covered in other pay items.

(B) Sanitary Sewer Service Taps:

Measurement will be the number of taps installed.

Payment will be made at the unit price bid and shall be compensation in full for furnishing and installing pipe and fittings complete in place, as specified and called for on the plans and standard details, including all cost of excavation, removal of obstructions, shoring and bracing, backfilling, compaction, pavement replacement, maintenance of traffic, and all work incidental thereto.

(C) Sanitary Sewer Cleanouts:

Measurement will be the number of cleanouts installed.

Payment will be made at the unit price bid and shall be compensation in full for furnishing and installing pipe, fittings, and frame and cover as called for on the plans and in accordance with the standard details.

- End of Section -

Case 13-15 revisions 06-27-14

SECTION 618

STORM DRAIN CONSTRUCTION

Field Code Changed

618.1 DESCRIPTION:

This section covers rigid and flexible ~~concrete pipe line and high density polyethylene (HDPE)~~ pipe line construction used for the conveyance of irrigation water and storm drainage in streets, easements, and alley right of ways, under low hydrostatic heads.

Installation of pipe in laterals of Salt River Valley Water Users' Association or other irrigation districts shall conform to the specifications and permit of the respective irrigation district.

Installation of pipe in State Highways shall conform to the specifications and permit of the Arizona Department of Transportation.

Installation of pipe under railways shall conform to the specifications and permit of the respective railway agency. ~~All pipes installed under railroad tracks shall be reinforced concrete pipe, ASTM C76, Class V and the minimum cover over all pipes shall be as specified in the railroad permit and/or special provisions. Bedding shall be in accordance with standard details.~~

Comment [WW1]: Moved here from 618.3.

618.2 MATERIALS:

~~The concrete pipe and HDPE p~~Pipe used for storm drain construction, including specials, joints, and gaskets, ~~and testing~~ shall be according to the following Sections, ~~620 or 735, 736 and 738, except as specified below~~ or as modified by special provisions.

- Cast-in-Place Concrete Pipe, see Section 620
- Reinforced Concrete Pipe (RCP), see Section 735
- Non-Reinforced Concrete Pipe, see Section 736
- High Density Polyethylene (HDPE), see Section 738
- Steel Reinforced Polyethylene (SRPE) Pipe, see Section 739
- Polypropylene Pipe, see Section 740
- Corrugated Metal Pipe, see Section 760

Formatted: List Paragraph, Bulleted + Level: 1 + Aligned at: 0.25" + Indent at: 0.5"

Comment [WW2]: Added, needs discussed.

~~(A) Specials: Pipe specials such as closure pieces, wyes, tees, bends, and manhole shafts shall be provided as indicated on the plans, and such specials shall be made equal in strength, diameter, and other physical characteristics to the standard straight pipe lengths by the use of extra concrete, extra reinforcing, or steel items. Drawings of specials shall be submitted to the Engineer for approval before their fabrication.~~

~~(B) Rubber Gasket Joints: When rubber gasket pipe is used, the joint shall be sealed with a continuous ring gasket made of a special composition rubber of such size and cross section as to fill the annular space provided for it. The gasket shall be the sole element depended upon to make the joint watertight, and shall have smooth surfaces, free from pits, blisters, porosity, and other imperfections.~~

~~(1) Rubber Gaskets for RCP shall be in accordance with ASTM C443 or AASHTO M 315.~~

~~(2) Rubber Gaskets for HDPE pipe shall be in accordance with Subsection 738.2.3.~~

~~(C) Water Stops: Water stops will be required when connecting HDPE pipe to concrete structures, manholes, etc. The water stop shall comply with Section 738 and will be installed per manufacturer recommendations.~~

~~(D) Cement Mortar Joints for RCP will be in accordance with Subsection 736.3.~~

Comment [WW3]: Pipe specific requirements, to be moved (as required) to pipe specs.

618.3 CONSTRUCTION METHODS:

SECTION 618

Trench Eexcavation, bedding, backfilling, and compaction or consolidation of backfill and bedding of trenches shall be accomplished in accordance with Sections 601 for rigid pipe and 603 for flexible for HDPE pipe, except as specified below, or as modified by special provisions.

The Contractor shall over-excavate the trench and fill with select materials in accordance with standard details.

Where the cover over the top of the pipe is less than 10 feet, the maximum trench width is unrestricted. The pay width, however, for pavement replacement shall remain in accordance with Section 336. For pipe, with 10 feet or more cover, the maximum trench width shall be as required by Sections 601 and 603 for HDPE pipe.

The laying of the pipe shall be in finished trenches free from water or debris, and shall be commenced at the lowest point, with the spigot ends pointing in the direction of the flow. Each pipe shall be laid firmly and true to line and grade, in such manner as to form a close concentric joint with the adjoining pipe and to prevent sudden off-sets of the flowline. Any adjustment to line and grade shall be made by scraping away or filling in under the body of the pipe, never by wedging or blocking under the pipe ends.

Trenchless installations of piping shall conform to the requirements of Section 607.

Variation from prescribed alignment and grade shall not exceed 0.10 foot and the rate of departure from or return to established grade or alignment shall be no more than 1 inch in 10 feet of pipe line unless otherwise approved by the Engineer. For closures and deflection angles greater than 10 degrees, joints shall be made by use of a bend, specially manufactured fitting, or by a concrete collar, per standard details. Pipe shall be of the type, class and size shown on the plans or in the special provisions.

All pipe, for permit construction, shall be reinforced concrete pipe, ASTM C76 Class III or HDPE pipe in accordance with ASTM F894, AASHTO 252 or AASHTO 294. For reinforced concrete pipe, the minimum cover from the top of the pipe to the finished grade shall be 2 feet and the maximum cover shall be 12 feet. The minimum and maximum cover for HDPE pipe shall be as specified in the special provisions or the manufacturer's recommendations.

All pipes installed under railroad tracks shall be reinforced concrete pipe, ASTM C76, Class V and the minimum cover over all pipes shall be as specified in the railroad permit and/or special provisions. Bedding shall be in accordance with standard details.

The allowable water loss for irrigation lines shall not exceed 2 gallons per hour per 100 feet of pipe per inch of diameter of pipe, under a minimum test head of 1 foot above the top of the pipe at the upper end when tested in accordance with the procedures of Section 615.

618.4 JACKING PIPE:

Pipe jacking shall be in accordance with Section 602.

At locations where jacking is required, the storm drain line shall be installed by jacking to the lengths indicated on the plans, in accordance with the following. The methods and equipment used in jacking reinforced concrete pipe conduit shall be optional with the Contractor, provided that the proposed method is first approved in writing by the Engineer. Such approval, however, shall in no way relieve the Contractor of the responsibility for damages of any nature which might occur as a result of the methods used.

Only workmen experienced in the operation of jacking concrete conduit shall be used.

The driving ends of the conduit shall be properly protected and the conduit shall be driven true to alignment and grade. The deviation from true line and grade at any single point within the jacked portion shall be limited to 0.5 feet horizontal deviation from line and ±0.2 feet vertical deviation from grade.

Comment [WW4]: Delete or if needed, move to 601/603.

Comment [WW5]: CASE 14-08 approved

Formatted: Font: Times New Roman, 10 pt

Formatted: Font: Times New Roman, 10 pt

Comment [WW6]: Move to Section 735, etc.

Comment [WW7]: Move to new Testing Section 611, if needed.

Formatted: Font: Not Bold

~~Any section of conduit which may show signs of failure shall be removed and replaced with a new section of precast conduit or with a cast-in-place section, which in the opinion of the Engineer is adequate to carry the loads imposed upon it. In this respect it shall be understood that where pipe is specified on the drawings to be jacked into place the jacked pipe shall be reinforced concrete of the strength specified in these specifications and the design of such pipe is based upon superimposed loads and not upon loads which may be placed upon the pipe as a result of jacking operation. Any increase in pipe strength required in order to withstand jacking loads shall be the responsibility of the Contractor. The reinforcing shall be circular and of either single or double cage design.~~

~~Spacer blocks shall be placed in the inside circular space which will allow sufficient width for point mortaring when jacking is completed and to equalize pressures during jacking. Three grout holes per 8-foot section of pipe shall be made during manufacturing.~~

~~Double rubber gaskets and band type joints shall be provided for 36 inches diameter and larger pipe.~~

~~One hole shall be made on the top midway between the ends. Two additional holes, each approximately 1.5 feet from each end and approximately midway between the springline and top on opposite sides shall be made.~~

~~Where the nature of the soil, or the structure under which the conduit is being jacked is such that, there is increased danger of a cave-in or damage to said structure, the method of jacking the conduit shall be as specified below.~~

~~The leading section of conduit shall be equipped with a jacking head securely anchored thereto to prevent any wobble or alignment variation during jacking operations. The length and details of the jacking head shall be subject to the written approval of the Engineer. Excavation shall be carried out entirely within the jacking head and no excavation in advance thereof will be permitted. Every effort shall be made to avoid any loss of earth outside of the jacking head. Excavated material shall be removed from the conduit as excavation progresses, and no accumulation of such material within the conduit will be permitted.~~

~~Upon completion of the jacking operations, all voids around the outside face of the conduit shall be filled by grouting through each of the previously constructed grout holes to the satisfaction of the Engineer. The grout shall be a mixture of one part cement to three parts sand and a mixture by volume.~~

~~Grouting equipment and material shall be on the job before jacking operations are started in order that grouting around the jacked conduit may be started immediately after the jacking operation. After grouting, the holes in the conduit shall be repaired to the satisfaction of the Engineer.~~

Comment [WW8]: Move as needed to Section 602.

618.5 ~~VIDEO~~ INSPECTION AND TESTING~~OF NEW MAINLINE STORM DRAINS~~:

Testing and inspection shall be in accordance with Section 611.

~~The Contractor shall provide the Engineer with an annotated video inspection record (either VHS or DVD format) of the new mainline storm drain pipeline. The video shall clearly show all joints, seals, connecting pipes, and manholes. This video shall be provided to the Engineer, and reviewed and approved by the Engineer prior to the Contractor being allowed to place the final pavement over the storm drain line. No separate payment will be made for this inspection; the cost of the video inspection shall be included in the cost of the pipe.~~

Comment [WW9]: Removing in favor of new Section 611 (dependent).

618.6 MEASUREMENT:

(A) Main Line Pipe: Shall be the number of linear feet of pipe laid as measured along the pipe axis.

Unless hereinafter modified, measurement shall extend through manholes when no change in pipe size occurs. When a change in pipe size occurs within a manhole, unless hereinafter modified, measurement for each size will be taken to the centerline of the manhole.

(B) Connecting Pipe: Shall be the number of linear feet of pipe installed, as measured along the pipe axis from a main line pipe, or a manhole, or a catch basin to a catch basin, or a plugged end, and shall include the portions of the connecting pipe embedded in the above structures.

~~(C) Jacked Pipe: Shall be made at the ground surface and shall be the number of linear feet of ground surface undisturbed by the cut and cover construction on either side of the jacked section.~~

Comment [WW10]: Move to Section 602.

618.7 PAYMENT:

(A) Main Line Pipe: Will be paid at the unit price bid per linear foot, to the nearest foot, for each size and type of pipe and shall be compensation in full for furnishing and installing the type of pipe as specified and as shown on the plans including removal of obstructions, excavation, bedding, backfilling, compacting, testing, joint materials, joining, collars, and field closures.

(B) Connecting Pipe: Will be paid at the unit price bid per linear foot, to the nearest foot for each size of pipe and shall be compensation in full for furnishing and installing complete in place as shown on the plans and as specified, the connecting pipe and specials including spur connections, removal of obstructions, excavation, bedding, backfilling, compacting, joint materials, joining, collars, field closures, and testing.

~~(C) Jacked Pipe: Will be paid the same as for main line pipe.~~

- End of Section -