Chandler • Arizona
Where Values Make The Difference

MEMORANDUM

Case # 16- 14

DATE: June 1, 2016

TO: MAG Specifications and Details Committee Members

FROM: Warren White, City of Chandler Representative

SUBJECT: Proposed Revisions to Water Meter Box and Cover Details

Purpose: Revise water meter box and cover detail no's 310-314 and 320 based on current practice and agency needs.

Revisions:

Detail No. 310 – 314 Cast Iron Water Meter Box Cover No. 1 - 5

- Consolidate all cover details into one 310. Table provides dimensions.
- Remove "CAST IRON" from detail title, no longer used
- Revise detail per current STEEL offerings
- New Detail 315 for polymer concrete
- Add verbiage for AMR as a detail note
    - Specify location only, leave additional specifications up to meter technology needs per agency requirements
- Add verbiage for reclaim water use as a detail note
    - Add marking note, specify Pantone 512 Purple color for cover

Detail No. 320 Concrete Water Meter Boxes

- Remove reference to cast iron covers and reference revised steel or polymer concrete lids found in Detail No. 310 or new Detail No. 315
- Revise title removing CONCRETE
- Correct error on dimensions table box number 2

DRAFT
5-19-2016

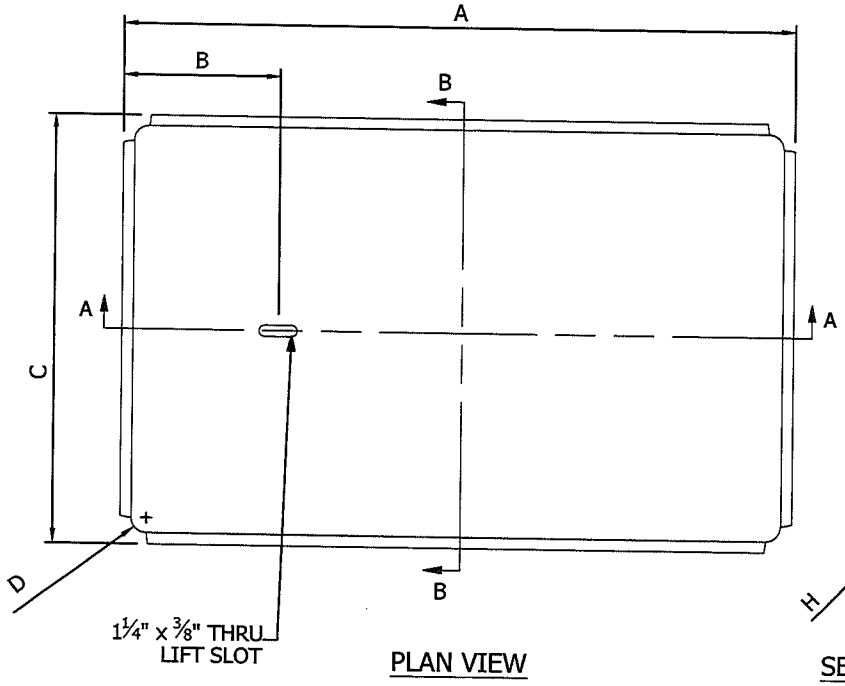

PLAN VIEW

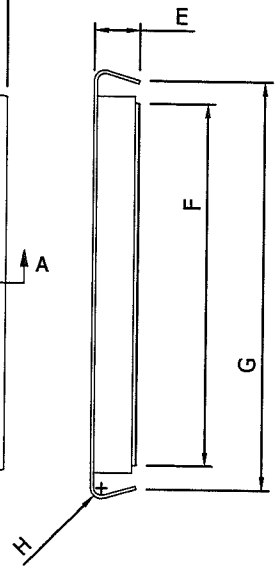

SECTION B-B

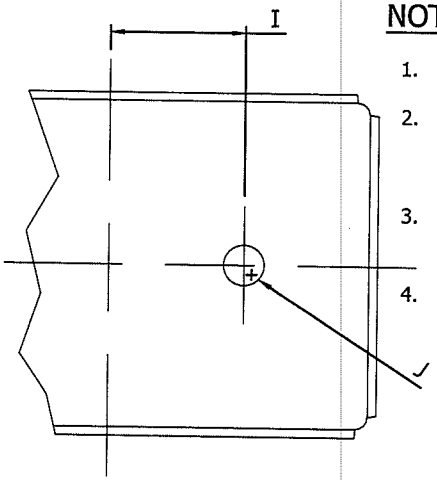

AMR DETAIL OPTION

NOTES:

1. ASTM A786
2. POTABLE WATER PAINTED BLACK AND RECLAIMED WATER PAINTED PANTONE PURPLE 512
3. DIMENSIONS SHOWN SHOULD NOT VARY MORE THAN A $\frac{1}{16}$ OF AN INCH
4. ALL COVERS MADE OUT OF DIAMOND CHECKER PLATE

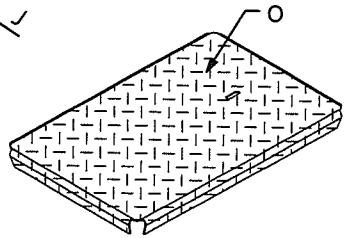

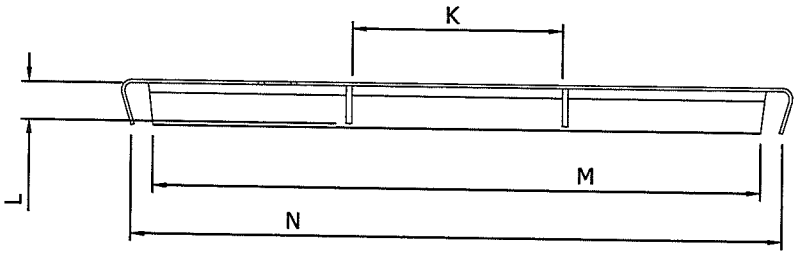

SECTION A-A

STEEL WATER METER COVER DIMENSIONS				
DIMS	COVER NUMBER			
	1	2	3	4
A	16"	20–1/4"	24–3/4"	30"
B	4"	4–3/4"	3–7/8"	4–38"
C	9–1/8"	13–1/8"	14–3/8"	19–1/2"
D	1/2"	1/2"	1/2"	1/2"
E	1–1/2"	1–3/8"	1–7/8"	1–5/8"
F	7–1/4"	11–1/8"	12–1/4"	17–1/2"
G	8–1/2"	12–1/2"	13–7/8"	19"
H	3/8"	3/8"	1/4"	1/8"
I	3–3/4"	6–5/8"	9"	12–1/4"
J	2"	2"	2"	2"
K	NA	6–7/8"	8–1/2"	7–3/8"
L	NA	1–1/4"	1–1/4"	1–1/4"
M	13–7/8"	18–3/8"	22–5/8"	28"
N	15–1/4"	19–3/4"	24–1/4"	29–1/2"
O	14 GAUGE	12 GAUGE	12 GAUGE	12 GAUGE

DETAIL NO.				REVISED	DETAIL NO.
310	MARICOPA ASSOCIATION of GOVERNMENTS	STANDARD DETAIL ENGLISH	STEEL WATER METER BOX COVER	1–1–2017	310

DRAFT
5-26-2016

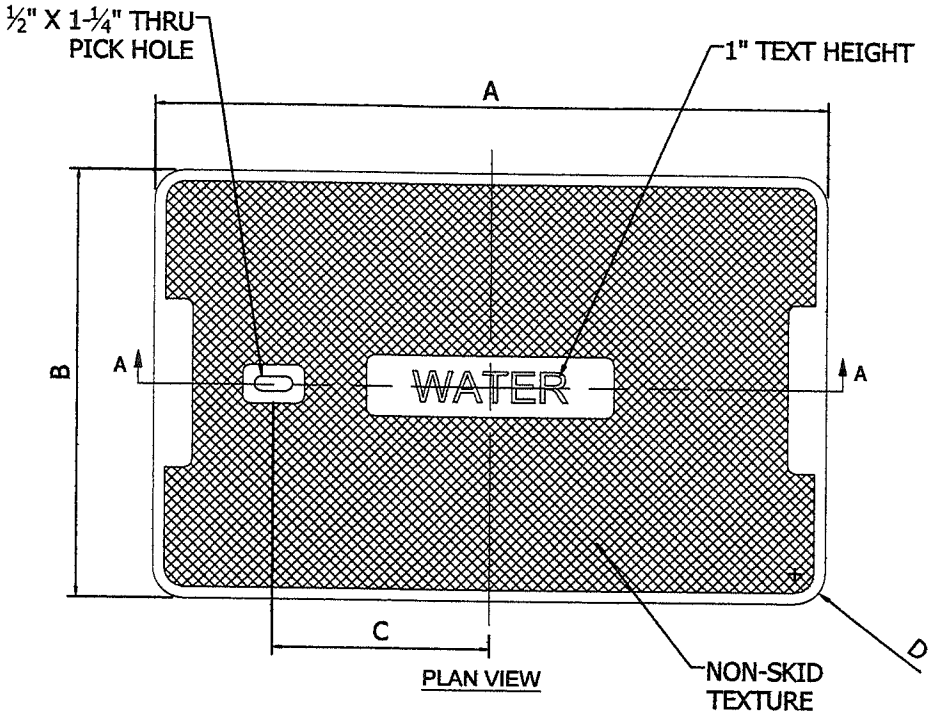

PLAN VIEW

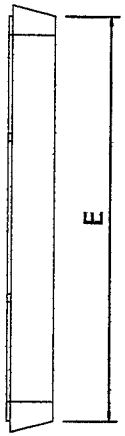

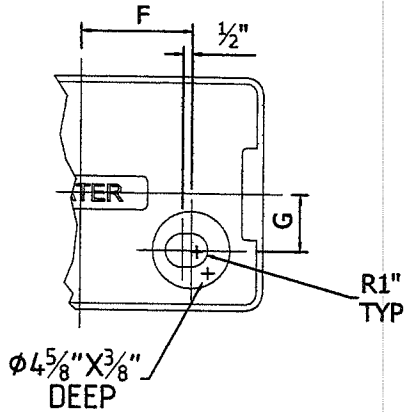

SLOTTED AMR DETAIL OPTION

NOTES:

1. POTABLE WATER TINTED GRAY AND RECLAIMED WATER TINTED PANTONE PURPLE 512
2. DIMENSIONS SHOWN SHOULD NOT VARY MORE THAN A $\frac{1}{16}$ OF AN INCH
3. ALTERNATIVE MATERIALS MAY INCLUDE "SHEET MOLDED COMPOUND" (SMC), AND "BULK MOLDED COMPOUND" (BMC). INJECTION MOLDED THERMOPLASTICS ARE NOT ACCEPTABLE MATERIALS

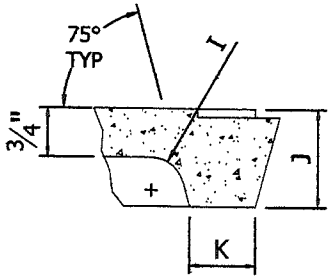

DETAIL B

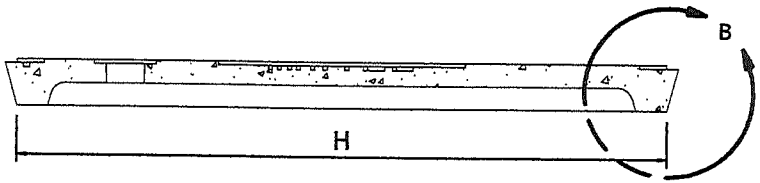

SECTION A-A

POLYMER CONCRETE COVER DIMENSIONS				
DIMS	COVER NUMBER			
	1	2	3	4
A	15–3/4"	21–3/4"	25–7/8"	30"
B	9"	14"	14–7/8"	19–1/2"
C	5"	7"	9"	10"
D	3/4"	1"	3/8"	3/8"
E	8–1/2"	13–1/4"	14–1/8"	19"
F	4–3/8"	6–5/8"	8"	10–3/4"
G	3/4"	3–3/8"	3–3/4"	6–1/4"
H	15–3/8"	21"	25–1/8"	29–1/2"
I	3/8"	1/2"	1"	1/4"
J	1–1/2"	1–1/2"	2–1/4"	1–1/2"
K	3/4"	1"	1"	1"

DETAIL NO.				REVISED	DETAIL NO.
315	MARICOPA ASSOCIATION of GOVERNMENTS	STANDARD DETAIL ENGLISH	POLYMER CONCRETE WATER METER BOX COVER	1–1–2017	315

DRAFT
5-7-2016

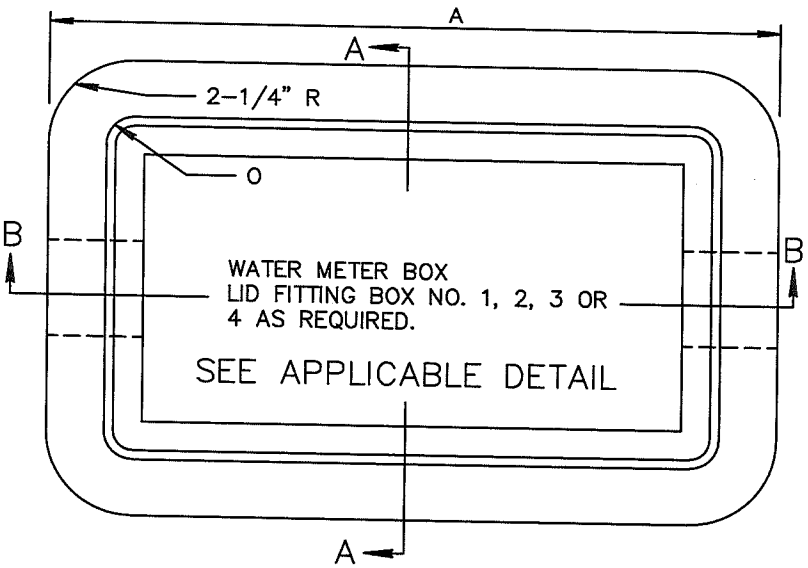

PLAN VIEW

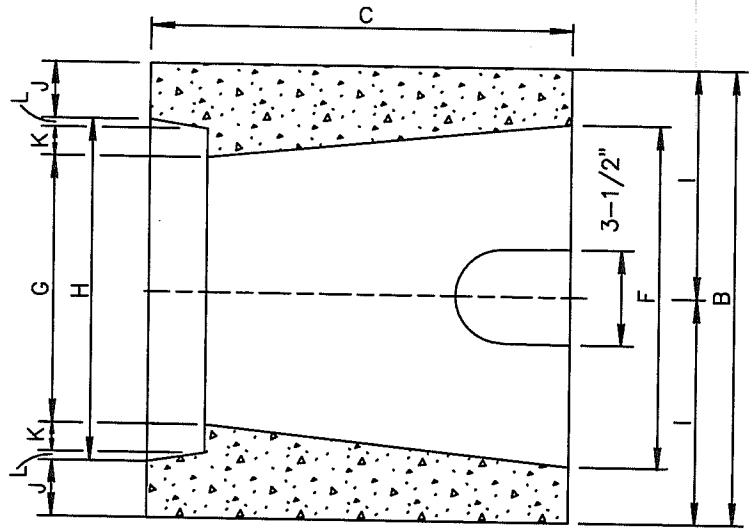

SECTION A-A

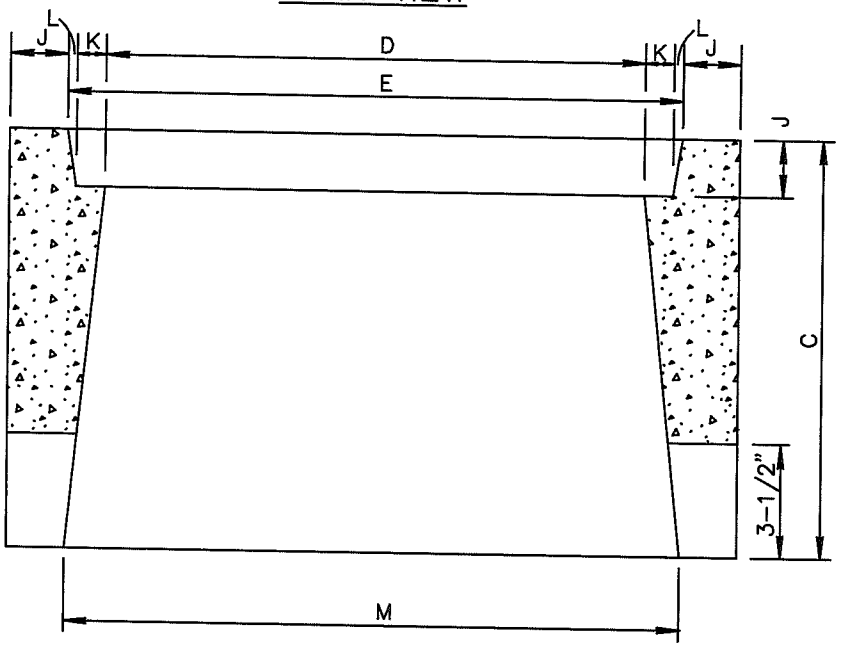

SECTION B-B

METER BOX DIMENSIONS				
DIMS	BOX NUMBER			
	1	2	3	4
A	18-1/2"	25"	28-3/8"	33-1/8"
B	11-3/4"	17-1/4"	17-5/8"	22-3/8"
C	12"	12"	12"	12"
D	14"	20"	24"	27-3/4"
E	16"	22"	26-3/8"	30-1/8"
F	9-1/4"	14-1/2"	15-1/8"	19-3/4"
G	7"	12-1/2"	13"	17"
H	9"	14-1/4"	15"	19-5/8"
I	5-7/8"	8-5/8"	8-7/8"	11-1/8"
J	1-1/2"	1-1/2"	2-1/4"	1-1/2"
K	3/4"	1/2"	3/4"	5/8"
L	1/4"	1/2"	1/2"	5/8"
M	16"	21-7/8"	26"	30-1/2"
O	1/2"	1/2"	5/8"	1/2"
	5/8" OR 3/4" METER	1" METER	1-1/2" METER	2" METER

NOTES:

1. THE METER BOXES SHALL CONFORM TO THE DIMENSIONS AS SHOWN AND SHALL BE MADE OF PORTLAND CEMENT CONCRETE POURED AND TAMPED (OR VIBRATED) IN TRUE FORMS.
2. USE CLASS 'AA' CONCRETE PER SECT. 725.
3. ALTERNATIVE MATERIALS MAY INCLUDE "POLYMER CONCRETE", "SHEET MOLDED COMPOUND" (SMC), AND "BULK MOLDED COMPOUND" (BMC). INJECTION MOLDED AND ROTATIONALLY MOLDED THERMOPLASTICS ARE NOT ACCEPTABLE
4. VERTICAL LOAD RATING OF 3,000 lbs. (MINIMUM) TO 10,000 lbs. (COVER SHALL WITHSTAND THE MINIMUM TEST LOAD APPLIED OVER 10X10 STEEL PLATE WITH $\frac{1}{2}$" RUBBER BACKING BETWEEN PLATE AND COVER, LOCATED IN CENTER OF COVER, WITH NO PERMANENT DEFLECTION OR DAMAGE TO LID OR BODY AFTER LOAD IS RELEASED)
5. DIMENSIONS SHOWN SHOULD NOT VARY MORE THAN A $\frac{1}{16}$ OF AN INCH

DETAIL NO.				REVISED	DETAIL NO.
320	MARICOPA ASSOCIATION of GOVERNMENTS	STANDARD DETAIL ENGLISH	WATER METER BOXES	1-1-2017	320