Chandler • Arizona
Where Values Make The Difference

MEMORANDUM **Case # 16- 15**

DATE: June 1, 2016

TO: MAG Specifications and Details Committee Members

FROM: Warren White, City of Chandler Representative

SUBJECT: Proposed Addition of Traffic Rated Box

Purpose: Need for box that can withstand AASTHO H20 rating

Proposal: Address the situation when a pedestrian rated box will not do. Add two industry standard size boxes that will address this need. These boxes will meet H20 loading and can be used in full traffic areas. Design to allow marking to be designated by utility or agency. New proposed detail to be created 319.

DRAFT
5-19-2016

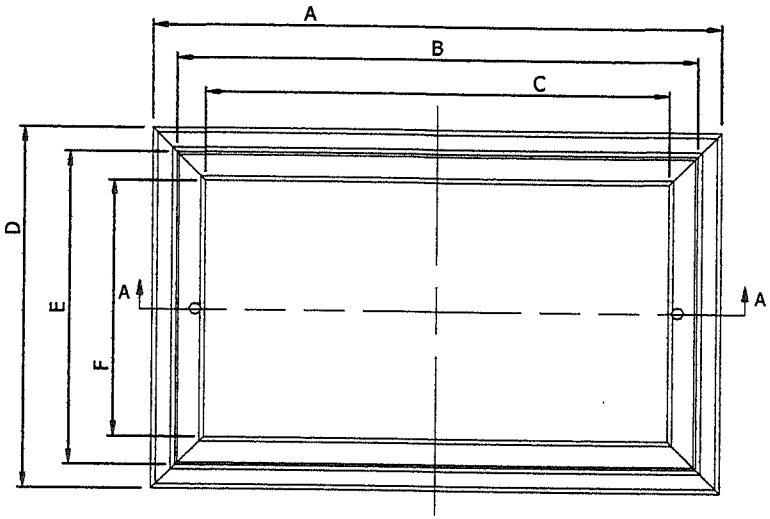

BOX ONLY - TOP VIEW

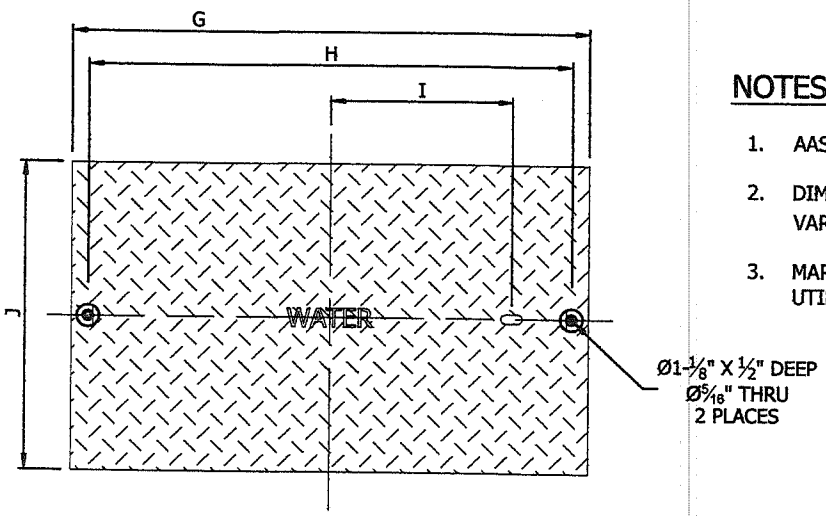

COVER ONLY - TOP VIEW

NOTES:

1. AASTHO H20
2. DIMENSIONS SHOWN SHOULD NOT VARY MORE THAN A $\frac{1}{16}$ OF AN INCH
3. MARKINGS PER AGENCY AND/OR UTILITY

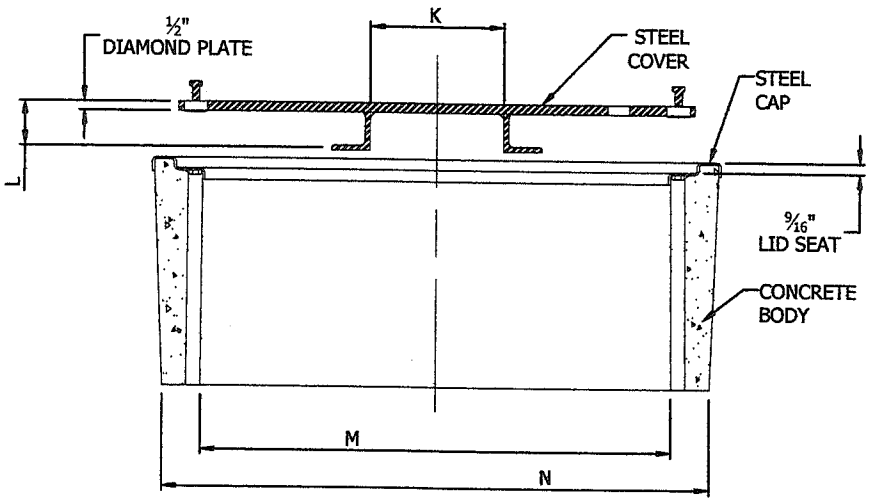

SECTION A-A BODY AND COVER

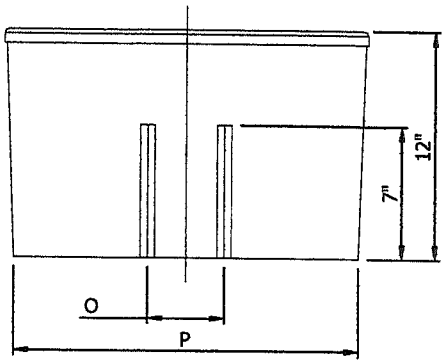

END VIEW

TRAFFIC BOX DIMENSIONS		
DIMS	BOX NUMBER	
	(1324)	(1730)
A	29–3/4"	36–7/8"
B	27–1/4"	33–1/2"
C	24–1/4"	30"
D	19"	23–3/4"
E	16–1/2"	20–1/2"
F	13–1/2"	17"
G	27"	33–1/4"
H	25–1/4"	31–1/4"
I	9–1/2"	12–1/8"
J	16–1/4"	20–1/4"
K	7"	10–3/4"
L	2–1/2"	3–1/2"
M	24–5/8"	30–5/8"
N	28–5/8"	35–7/8"
O	4"	5–3/4"
P	18"	22–5/8"

DETAIL NO.				REVISED	DETAIL NO.
319	MARICOPA ASSOCIATION of GOVERNMENTS	STANDARD DETAIL ENGLISH	TRAFFIC RATED BOX AND COVER	1–1–2017	319