MAG Draft Pattern Outdoor Lighting Code Technical Basis and Background

At the January Dark Sky Stakeholders Group (DSSG) meeting, attendees asked for the rationale behind the numbers and figures in the draft MAG Pattern Outdoor Lighting Code (POLC). This document identifies the technical reasons for figures that appear in the MAG POLC, as well as concerns raised by a variety of stakeholders. It also provides a brief rationale for the non-technical figures (e.g. administrative or legal). The technical rationale and background has been provided by Chris Luginbuhl of the US Naval Observatory Flagstaff Station.

The Frequently Asked Questions (FAQ) provide accurate and relevant information on the MAG draft POLC. The FAQ can be used as a resource for new participants to the process.

All attendees to the February 15, 2011 MAG DSSG meeting are strongly encouraged to read this document prior to the meeting. Since this is a technical document please be prepared to provide comments on your review or have the appropriate person(s) at the meeting to provide comments. The goal is to discuss each concern to arrive at consensus on Alternative A-C.

FAQ

Why did MAG develop a draft Pattern Outdoor Lighting Code?

- *To provide a pattern code for guidance in updating existing (out-of-date) outdoor lighting codes of MAG member agencies.*
- *To preserve Arizona astronomy - a 250 million dollar per year business.*
- *To help the member agencies save energy as well as costs by recognizing and prohibiting unshielded and excessive outdoor lighting. Luginbuhl & Lockwood (2008) estimate that up to $30 million / yr could be saved in Arizona.*

What is the need and purpose for an outdoor lighting code?

- *To encourage optimum use of outdoor lighting for future development and growth.*
- *To permit reasonable uses of outdoor lighting for nighttime safety, utility, security, and enjoyment while preserving the ambiance of the night.*
- *To conserve energy and resources to the greatest extent possible.*
- *To minimize glare and obtrusive light by limiting outdoor lighting that is misdirected, excessive, or unnecessary.*

Does an Outdoor Lighting Code regulate street lights?

Section 3.5 of the MAG POLC addresses public roadways and states that lighting for public roadways and pedestrian lighting must comply with the code, except the lumens cap of Section 4.2. Typically the municipality's Street or Transportation Department sets and implements street lighting standards.

What about existing lighting?

All outdoor lighting codes in Arizona, including this draft MAG POLC, grandfather any installation compliant with the previous regulations. New installations and significant modifications or replacements are where the new code would take effect.

What about retrofitting? Is there additional expense for existing businesses?

There are no requirements for retrofitting existing lighting. Currently existing lighting will not be affected by adoption of the POLC.

Can MAG adopt the POLC?

MAG is not an enforcement agency, as such, the POLC is not for adoption by MAG. It is anticipated that MAG member agencies may adopt the POLC either in whole or in part as necessary for their jurisdiction.

What is a pattern code?

The term "pattern code" means that the code is a guideline or template that can be modified to suit each community. It offers a comprehensive guide to minimize obtrusive aspects of outdoor lighting. The draft MAG POLC is intended for use by any community of any size or locale that wishes to create a new, or update an existing, outdoor lighting code.

What is it not?

The POLC is not a lighting design standard. It does not require a property owner or business to meet any particular lighting design standards. All standards in the POLC are intended to limit the obtrusive aspects of outdoor lighting, such as glare and decreased visibility, to areas/people off-site from the obtrusive lighting source.

Section 3

CONCERN	*ALTERNATIVE A*	*ALTERNATIVE B*	*ALTERNATIVE C*	*ALTERNATIVE D*
Section 3. Applicability *Change 25 percent to 50 percent to be consistent with building code requirements.*	*25 percent*	*50 percent*	*75 percent*	*Do nothing.*

Figures: 25 / 50 percent
Type: non-technical

Under Arizona law all lighting legally installed before passage of a new or updated code is entitled to legal nonconforming status in perpetuity; it need not be modified to meet the standards of the new or modified code. Reasonable maintenance such as lamp replacement is allowed without requiring conformance. However, when lighting equipment is replaced or "significantly" modified, the new lighting must conform to the codes in place when the replacement or modification occurs. All jurisdictions establish a threshold to differentiate maintenance from true additions or substantial modifications. In the POLC a threshold of 50 percent *of initial value is suggested to determine when significant modifications or upgrades to sites requires conformance. A* 25 percent *threshold is used in many lighting codes. This threshold will be discussed and decided upon by each jurisdiction.*

Section 4.1

CONCERN	*ALTERNATIVE A*	*ALTERNATIVE B*	*ALTERNATIVE C*	*ALTERNATIVE D*
Section 4.1 *Create 3 lighting zones, rural, suburban and urban.*	*LZ1 rural and suburban* *LZ2 urban*	*LZ1 rural* *LZ2 suburban* *LZ3 urban*	*As many lighting zones as deemed necessary by the jurisdiction.*	*Do nothing.*
Table 4.1 *Change 2000 lumens to something greater than 2000 lumens.*	*2000 lumens all zones*	*LZ1 2000 lumens* *LZ2 3000 lumens* *LZ3 3000 lumens*	*3000 lumens all zones*	*Do nothing.*

Figures: Class 1 / 2 / 3
Type: technical

The definition of lighting class recognizes three principal general uses for outdoor lighting: lighting for outdoor sales or activity areas where color rendition is important (class 1); lighting for wayfinding and safety of automobiles and pedestrian/customers where general illumination is important but color perception less so (class 2); and lighting for decorative uses (class 3). These lighting types/uses are distinguished because they have different needs for lighting color, type of lamps used, and relation to critical needs such a safety, utility and security.

To simplify the MAG POLC, it has been suggested and accepted by the DSSG to remove the class distinctions, referring only to "decorative" lighting in section 4.7.A.

Figures: Lighting Zone 1 / Lighting Zone 2 / Lighting Zone 3
Type: technical

The use of lighting zones is based on the concept that the sensitivity of different environments to off-site impacts of outdoor lighting varies. For example, environments dominated by residential uses are much more sensitive to light trespass and glare than heavily developed commercial environments. In general, the DSSG felt that two lighting zones, with some additional conditions for commercial/residential boundaries, were adequate to address the majority of the issues and provide a simpler code than one using more zones. Lighting Zone 1 *is defined as primarily residential environments (including rural and suburban areas and commercial properties located in residential areas), and* Lighting Zone 2 *including environments dominated by commercial and industrial uses, such as urban districts.*

*It has been suggested that three (or more) lighting zones be offered as an alternative. The POLC will include an option for three zones, to include rural areas (*Lighting Zone 1*), suburban (primarily residential) areas (*Lighting Zone 2*), and downtown urban districts (*Lighting Zone 3*). Some jurisdictions use a larger number of lighting zones.*

Figures: 3000 / 2000 / 1000 lumens; 50'
Type: technical

(The impact of unshielded lighting on sky glow is discussed under Section 4.2.)

To minimize glare and light trespass into residential properties (arising at both commercial-residential and residential-residential boundaries), unshielded lights on non-residential properties may not be brighter than 2000 lumens (lm) *or located closer than* 50 feet *to a residential property line. This is approximately based on the concept of limiting illuminance at the property line from an unshielded light to 2x full moonlight (0.06 footcandle). (A* 2000 lm *lamp is equivalent to about 100 W incandescent or 26 W compact fluorescent.)*

In a three-zoned lighting code, the limit is raised to 3000 lm*, allowing approximately 4x full moonlight (0.1 footcandle) at the property line.*

In residential environments the single largest source of complaint related to lighting is light trespass or glare from unshielded lighting. On a residential property, the POLC allows a maximum brightness for an unshielded lamp of 1000 lm*, equivalent to about 60W incandescent or 13 W compact fluorescent. This*

lowers light trespass levels, again assuming 50' *distance, to about full moonlight level. (A* 1000 lm *lamp is equivalent to about 60 W incandescent or 13 W compact fluorescent.)*

Figure: 45-degrees
Type: technical

Spotlights commonly used on residential properties can have a much higher intensity than an unfocused lamp. Therefore, the POLC requires that they be aimed downward to limit the off-parcel brightness. The angle used – 45-degrees *or half-way between straight down and straight sideways – is chosen to allow flexibility in light placement relative to the illuminated area (i.e. the lamp can still be used to illuminate an area located some distance away from the lamp), to limit glare and trespass off-site, and to simplify interpretation for users and code enforcement.*

Section 4.2

CONCERN	*ALTERNATIVE A*	*ALTERNATIVE B*	*ALTERNATIVE C*	*ALTERNATIVE D*
Section 4.2 *Revise highest lumen level of 150,000 to a higher number.*	*LZ1 50,000 lumens* *LZ2 150,000 lumens*	*LZ1 50,000 lumens* *LZ2 100,000 lumens* *LZ3 200,000 lumens*	*As many lighting zones as deemed necessary by the jurisdiction.* *Unknown number of LZ therefore cannot specify lumen limits.*	*Do nothing.*

Figures: 50,000 / 100,000 / 150,000 / 200,000 lumens/acre *(total nonresidential lumen budget)*
Type: technical

The majority of lighting needed on nonresidential properties is for basic area lighting, such as lighting for automobile and pedestrian areas including parking lots and walkways. Other lighting is often used for decorative purposes such as landscape lighting and building floodlighting.

A basic metric of the lighting design professions is the illumination level, measured in footcandles. The MAG POLC uses a metric related to the overall amount of light used on the site, scaled to the area of the site, or lumens per acre. This "lumens per acre" approach is based on lighting codes whose primary concern are off-site impacts, rather than on-site lighting design, and has been used for more than 20 years. Further, it has been found critical to avoid specifying lighting design in detail for a number of reasons, including the wide variation in expertise and training of those that must interpret and apply the lighting code (such as community planning staff, electricians, engineers, lighting designers, business and property owners), maintaining maximum flexibility in lighting design, minimizing costs and staff training for jurisdictions, legal implications for jurisdictions taking responsibility for lighting design, and complications for confirming conformance to the lighting code. Nonetheless, a general lumens per acre limit must be compatible with lighting design needs.

For area lighting needs, basic recommendations of the lighting industry are for an illumination level of 0.2 footcandle (fc) at the dimmest point on the parking lot (IESNA, 1998). Assuming typical lighting technical parameters such as fixture efficiencies, light loss factors, and application efficiencies (see table below), between 50,000 lumens/acre (lm/ac) *and* 100,000 lm/ac *are adequate to meet these needs. With typical design efficiencies,* 100,000 lm/ac *allows a substantial amount of lighting for nonessential uses such as ornamental lighting, while* 50,000 lm/ac *has much less room for such uses. A limit of* 150,000 lm/ac *or* 200,000 lm/ac *allows a substantial amount of light for nonessential uses, or for less efficient designs.* 50,000 lm/ac *can also meet the basic area lighting needs but will require in many cases designs that are more efficient than average but achievable with good lighting design.*

Lighting technical parameters

lm/ac	*50000*	*50000**	*100000*	*150000*	*150000**	*200000*
application CU	*0.5*	*0.7*	*0.5*	*0.5*	*0.7*	*0.5*
LLF	*0.65*	*0.65*	*0.65*	*0.65*	*0.65*	*0.65*
fixture CU	*0.65*	*0.65*	*0.65*	*0.65*	*0.65*	*0.65*
parcel illuminated fraction	*0.65*	*0.65*	*0.65*	*0.65*	*0.65*	*0.6*
average illuminance (fc)	0.4	0.5	0.7	1.1	1.6	1.5
ave/min illuminance	*2.1*	*2.9*	*3*	*3*	*3*	*3*
minimum illuminance (fc)	0.2	0.2	0.2	0.4	0.5	0.5

** efficient design*
CU= coefficient of utilization; LLF = light loss factor

Figures: 5,000 / 10,000 lm/ac *(total nonresidential unshielded lumen budget)*
Type: technical

Research shows that unshielded lighting has a dramatically increased impact on dark skies compared to the same amount of shielded lighting. A 10,000 lumen unshielded light has a 2-10x greater impact on dark skies than a 10,000 lumen fully shielded light (Luginbuhl, Walker and Wainscoat, 2009).

Though there are no critical lighting needs, and very few lighting needs of any kind, which require unshielded lighting, in some applications unshielded lighting is commonly used (for example building façade lighting, landscape lighting, flag lighting). Despite the dramatic increased impact on dark skies, the POLC allows as a compromise some unshielded lighting, though with tight limits on the total amount. Though there is no particular lighting design or application that dictates the figures of 5000 lm/ac *or* 10,000 lm/ac*, these values have been found to be a practical compromise that provides flexibility with reasonable impacts on night skies.*

Figures: 20,000 lm/residence *(total residential lumen allowance);* 5,000 lm/residence *(total residential unshielded lumen allowance);* 5,500 lm/residence *(total residential unshielded allowance minimum)*
Type: technical

Lighting needs and desires on residential properties are highly variable and subject to individual tastes. The figures listed in the POLC are liberal, allowing as many as ten 100 W or eighteen 75 W incandescent

lamps. As many as 5,000 lm/residence *may be unshielded, equivalent to about five 60 watt incandescent lamps.*

Section 4.3

CONCERN	*ALTERNATIVE A*	*ALTERNATIVE B*	*ALTERNATIVE C*	*ALTERNATIVE D*
Table 4.3 *Consider a higher CCT. Highest is 4200K as currently written.* *Remove Class 1/2/3 distinction from POLC.*	*4300K appropriate for all LZ*	*4300K appropriate for all LZ*	*no CCT limits*	*Do nothing.*
Table 4.3 *Class 2 lighting at 2200K is too low*	*LZ1 3000K* *LZ2 4300K*	*LZ1 3000K* *LZ2 4300K* *LZ3 4300K*	*no CCT limits*	*Do nothing.*

Figures: 4300 / 3000 K CCT
Type: technical

As discussed under Section 4.1, the distinction of Class 1/2/3 has been removed to simplify POLC.

*Standards for lower correlated color temperatures (CCT) limit light emissions with wavelengths shorter (bluer) than about 500 nm (blue-green to the human eye). Light emissions below 500nm wavelength contribute very little to vision, but have larger demonstrated or potential negative impacts such as sky glow, glare and circadian rhythm and health disruption (IDA, 2010). Thus, lower CCT diminishes these negative effects with minimal impacts on efficiency, while still allowing a wide variety of available products and design approaches to outdoor lighting. The specific figures chosen (*4300 K *and* 3000 K*) are selected to include the majority of LED products (*4300 K*), and to specify "warm white" or lower CCT (*3000 K*) in residential areas.*

Section 4.5

Figures: 10,000 lumens / 50 feet
Type: technical

*When residential properties are located adjacent to commercial properties, the potential for the high intensity lighting commonly used on commercial properties to intrude on residential properties requires particular attention. The POLC requires that brighter lights (*10,000 lm *and greater) mounted within* 50 feet *of a residential property line must have an additional shield, called a "house side shield," to limit*

trespass. The particular figures chosen are guided by a general principle of requiring the additional expense of special shielding only when the potential for light trespass is greatest.

Section 4.7

CONCERN	*ALTERNATIVE A*	*ALTERNATIVE B*	*ALTERNATIVE C*	*ALTERNATIVE D*
Section 4.7 *Change 30 minute curfew to one hour.* Add requirement to POLC for automatic controls on lights to be used at curfew.	*60 minutes*	*60 minutes*	*no curfew*	*Do nothing.*

Figure: 10pm etc.
Type: non-technical

Applying curfews to decorative and area lighting that is not directly associated with security arises from the general principle of energy conservation and the idea that the business/advertising and safety value of lighting when businesses are not open or late at night is reduced. This is a compromise where lighting is reduced when business or safety impacts are minimal, even though all night hours are of equal importance to professional astronomy - astronomy begins at sunset and ends at sunrise. The specific times chosen are suggestions only, and must be decided on jurisdiction by jurisdiction basis following business activity and community goals.

Section 5.1.A

CONCERN	*ALTERNATIVE A*	*ALTERNATIVE B*	*ALTERNATIVE C*	*ALTERNATIVE D*
Section 5 *Remove sign standards*	*Leave as currently written*	*Move sign standards to municipal sign code*	*Eliminate Section 5*	*Do nothing.*

Figure: 200 lumens/sf
Type: technical

This figure is based on recommendations of the IESNA (IESNA, 2000) as well as a survey of 510 billboard faces in the Tucson metropolitan area. In the Tucson survey, 83 percent of the billboard faces used 200 lumens per square foot and less.

Section 5.2

CONCERN	*ALTERNATIVE A*	*ALTERNATIVE B*	*ALTERNATIVE C*	*ALTERNATIVE D*
Section 5.2 *Sign color designs. Be careful regulating sign color.*	*Add text to POLC indicating this does not apply to registered trademarks.*	*Eliminate Section 5.2A.*	*Eliminate Section 5.2A.*	*Do nothing.*

*Figure: "*not white, off-white, cream or yellow*…"*
Type: technical
Text will be added to the POLC to exempt trademarks from background color restrictions when the color of the background is explicitly part of a registered trademark,

Otherwise, the colors used for internally illuminated signage have a large impact on light output and are important to address to reduce light pollution. A study by Luginbuhl (2002) shows that the total light output of a typical light-background internally illuminated sign is about 7x that of a colored background sign, and 30x that of an opaque background sign. Further, as the light emitted from internally illuminated signs is directed sideways with 50% going upward and into the sky, the impact of such signage on dark skies is disproportionate to the amount of light used in such signs. In other words, even though signs do not account for a large amount of the light emitted by a city, because this light is unshielded its impact is much greater than would be indicated by its proportion of the total light output. In Flagstaff, where new light-background signs have been prohibited since 1989, a survey (Luginbuhl et al., 2009) estimated that the total amount of upward-directed light output due to signs was only 1.3% of the Flagstaff total; if these signs had used light backgrounds this proportion would have been about 4%, 1.5x as much uplight as produced by all hotels in the city, and almost 30x as much as produced by all roadway lighting.

CONCERN	*ALTERNATIVE A*	*ALTERNATIVE B*	*ALTERNATIVE C*	*ALTERNATIVE D*
Section 5.2B *Rewrite this section to clarify meaning. ASA recommends eliminating all references to lumens cap for signage.*	*Modify POLC to strike second and third sentences "Any lighting… "*	*Modify POLC to strike second and third sentences "Any lighting… "*	*Modify POLC to strike second and third sentences "Any lighting… "*	*Do nothing.*

Section 5.3.A

CONCERN	*ALTERNATIVE A*	*ALTERNATIVE B*	*ALTERNATIVE C*	*ALTERNATIVE D*
Section 5.3A *Change nighttime luminance limit for multicolor changeable-copy LED displays (current limit is 100 nits)*	*100 nits all LZ*	*LZ1 100* *LZ2 150* *LZ3 200*	*300 nits all LZ*	*Do nothing.*

Figure: 100 / 150 / 200 / 300 nits
Type: technical

Unlike previous technologies, digital LED billboards are designed to produce brightness levels that are visible during the daytime; though they are adjusted to fainter levels at night, should too large a fraction of this brightness be used at night serious consequences for driver visibility and safety are possible. Further, like any sign, the light emitted by billboards is unshielded, and thus has a disproportionate impact on dark skies. A review of the lighting professional literature (Luginbuhl et al,. 2010) indicates that drivers should be subjected to brightness levels of no greater than 10 to 40 times the brightness level to which their eyes are adapted for the critical driving task. As roadway lighting and automobile headlights provide lighting levels of about one nit, this implies signage directed at drivers should appear no brighter than about 40 nits. Standard industry practice with previous technologies, based on a survey of over 70 billboards in the Phoenix, Chicago, Los Angeles and San Francisco metropolitan areas, shows such billboards are illuminated on average to less than 60 nits (Luginbuhl et al., 2010, with additional data), and rarely exceeds 100 nits. As these billboards were not limited in brightness by any regulation, it appears sensible from all perspectives to limit digital billboards to 100 nits. Higher values up to 300 nits *are included as alternatives at the request of the sign industry.*

Section 5.4

CONCERN	*ALTERNATIVE A*	*ALTERNATIVE B*	*ALTERNATIVE C*	*ALTERNATIVE D*
Table 5.4 *Remove sign curfews*	*Leave as currently written*	*modify to read "… or within one hour of the business closing, whichever is later."*	*no sign curfew*	*Do nothing.*

Figure: curfews
Type: non-technical

As for Section 4.7, applying curfews to sign lighting arises from the general principle of energy conservation and the idea that the business/advertising value of signage when businesses are not open or late at night is reduced. Specifically regarding signs, the issues for unshielded lighting discussed above under Section 5.2 also apply. The specific times chosen are suggestions only, and must be decided on a jurisdiction-by-jurisdiction basis following community goals.

Section 6.1.D

CONCERN	*ALTERNATIVE A*	*ALTERNATIVE B*	*ALTERNATIVE C*	*ALTERNATIVE D*
Section 6.1D *The words "no greater than" do not allow for an engineering design margin.*	*Modify POLC to allow illumination up to 110 percent of IESNA recommendation.*	*Modify POLC to allow illumination up to 110 percent of IESNA recommendation.*	*Modify POLC to allow illumination up to 110 percent of IESNA recommendation.*	*Do nothing.*

Figure: [Illuminance]
Type: technical

The illuminance requirements are based on the IESNA recommended practice RP-6-01 (IESNA, 2001). Increasing the allowance to 110% of the recommendation allows a design margin for the differences between designed and actual illumination levels of an installation.

Section 6.2.C

CONCERN	*ALTERNATIVE A*	*ALTERNATIVE B*	*ALTERNATIVE C*	*ALTERNATIVE D*
Section 6.2 *60 lumens/square foot is too low for the frontage row of vehicle display areas* Add zones to POLC.	*LZ1 = 40 lumens/sq ft* *LZ2 = 60 lumens/sq ft*	*LZ1 = 40 lumens/sq ft* *LZ2 = 60 lumens/sq ft* *LZ3 = 80 lumens/sq ft*	*As many lighting zones as deemed necessary by the jurisdiction.* *Unknown number of LZ therefore cannot specify lumen limits.*	*Do nothing.*

Figure: 40 / 60 / 80 lumens per square foot
Type: technical

The limit of 60 lm per square foot *is based on efficient lighting design using metal halide fixtures, and allows 150% of the highest illumination level listed for outdoor sales lots in the IESNA recommended practice RP-33-99 Lighting for Exterior Environments (IESNA, 1999). Lighting using white LEDs can achieve approximately 200% of the RP-33-99 recommendation. Limits of* 40 *and* 80 lm per square foot *will allow 100% and 200% of the same recommended levels (or approximately 150% and 300% using LEDs).*

Section 6.3.C

Figure: 60 lumens per square foot
Type: technical

The limit of 60 lm per square foot *is based on efficient lighting design using metal halide fixtures, and allows 150% of the highest illumination level listed for service dishing canopies in the IESNA recommended practice RP-33-99 Lighting for Exterior Environments (IESNA, 1999). Lighting using white LEDs should be able to achieve approximately 200% of the RP-33-99 recommendation.*

CONCERN	*ALTERNATIVE A*	*ALTERNATIVE B*	*ALTERNATIVE C*	*ALTERNATIVE D*
Section 6.3D *Change curfew from 30 minutes to 60 minutes.*	*Modify POLC from 30 minute curfew to 60 minute curfew.*	*Modify POLC from 30 minute curfew to 60 minute curfew.*	*Modify POLC from 30 minute curfew to 60 minute curfew.*	*Do nothing.*
Section 9.2 *Allow search lights with a permit. Also suggested to add laser lights with a permit. Be sure to note that they need to be below the horizontal.*	*Modify POLC to allow search lights with a permit.*	*Modify POLC to allow search lights with a permit.*	*Modify POLC to allow search lights with a permit.*	*Do nothing.*

Section 16 Definitions

As used in this Code, unless the context clearly indicates otherwise, certain words and phrases shall mean the following:

16.1. **Abandoned**. *Abandonment shall be determined as provided in Section _____ of the City/Town's Zoning Ordinance.*

16.2. **Billboard**. *Any sign designed for use with changeable advertising copy and which is normally used for the advertisement of goods produced or services rendered at locations other than the premises on which the sign is located.*

16.3. **CCT**. *See* **Correlated Color Temperature**.

16.4. **Class 1 Lighting**. *All outdoor lighting used for, but not limited to, outdoor sales or eating areas, assembly or repair areas, advertising and other signs, recreational facilities and other similar applications where COLOR RENDITION IS IMPORTANT to preserve the effectiveness of the activity. Designation of lighting as* **Class 1 lighting** *requires a finding by the Planning Director of the essential nature of color rendition for the application. Recognized* **Class 1 lighting** *uses are: outdoor eating and retail food or beverage service areas; outdoor maintenance areas where maintenance activity occurs after dark;* **display areas***; assembly areas such as concert or theater amphitheaters.*

16.5. **Class 2 Lighting**. *All outdoor lighting used for, but not limited to, illumination for walkways, roadways, equipment yards, parking lots and outdoor security where GENERAL ILLUMINATION for safety or security of the grounds is the primary concern.*

16.6. **Class 3 Lighting**. *Any outdoor lighting used for DECORATIVE effects including, but not limited to, architectural illumination, flag and monument lighting, and illumination of trees, bushes, etc.*

16.7. **Correlated Color Temperature**. *(of a light source) The temperature (in Kelvins - K) of a black-body radiator (e.q. the tungsten filament in an incandescent lamp) that radiates light of comparable hue to that light source. Higher CCT sources appear bluer or "cooler," lower CCT sources appear yellower or "warmer."*

16.8. **Development Project**. *Any residential, commercial, industrial or mixed use subdivision plan or development plan which is submitted to the City for approval.*

16.9. **Direct Illumination**. **Illumination** *resulting from light emitted directly from a lamp or* **luminaire***, not light diffused through translucent signs or reflected from other surfaces such as the ground or building faces.*

16.10. **Directly Visible**. *Allowing a direct line-of-sight to the light source or lamp.*

16.11. **Display Area.** *Outdoor areas where active nighttime sales activity occurs AND where accurate color perception of merchandise by customers is required. Recognized* **display area** *uses include*

automobile and recreational vehicle sales, boat sales, tractor sales, building supply sales, gardening or nursery sales, swap meets. Uses not listed here must be approved as display lot uses by the Planning Director.

16.12. Frontage Row of Vehicle Display Area. *That portion of a* display area *used for vehicles located adjacent to the parcel frontage. Includes only the front row of vehicles adjacent to the parcel frontage; does not include the driving area located behind the parked vehicles or the remainder of the* display area *not adjacent to the frontage. (Figure 16.10)*

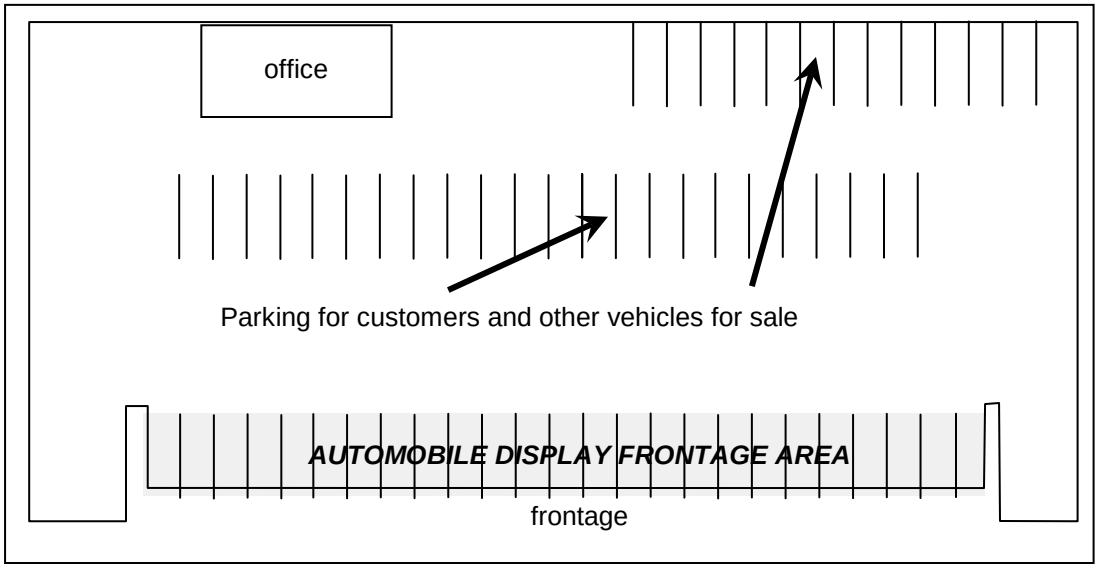

Figure 16.10. Frontage Row of Vehicle Display Area

16.13. Flood Lamp. *See* Spot Lamp.

16.14. Footcandle. *The standard imperial unit used to measure* illuminance*, or the amount of light falling onto a surface, such as a roadway or athletic field. One* footcandle *equals one* lumen *per square foot. One* footcandle *equals approximately 10* lux.

16.15. Fully Shielded (Light Fixture)*. A lighting fixture constructed in such a manner that all light emitted by the fixture, either directly from the lamp or a diffusing element, or indirectly by reflection or refraction from any part of the* luminaire*, is projected below the horizontal. Any structural part of the light fixture providing this shielding must be permanently affixed and part of the fixture, not part of any surrounding building or architectural elements.*

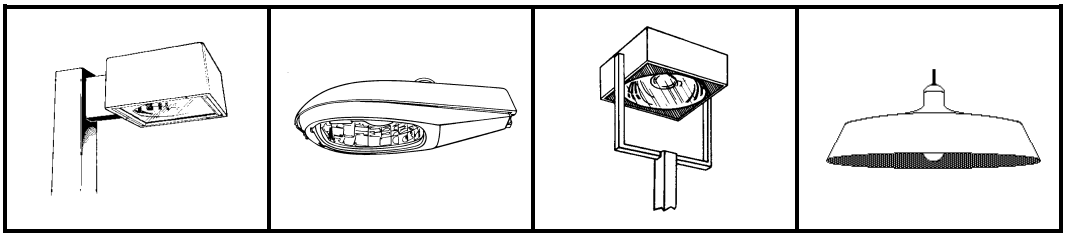

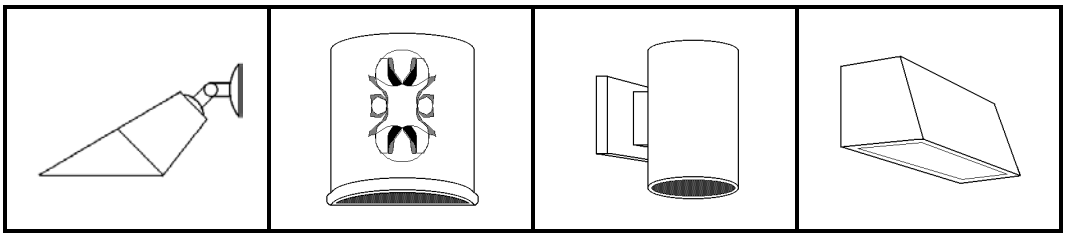

Figure 16.13a. Examples of fully shielded fixtures.

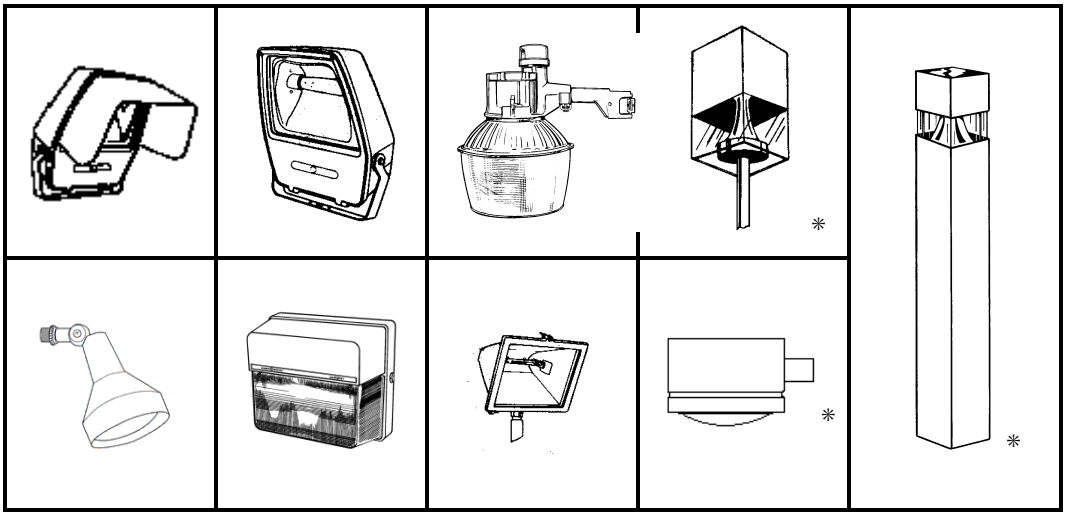

Figure 16.13b. Examples of fixtures that are NOT fully shielded *(*even though the lamp in these fixtures is shielded from direct view when viewed from the side or above, reflective surfaces and/or lens covers are directly visible from the side).*

16.16. Illuminance*. The amount of light falling onto a unit area of surface (luminous flux per unit area) - measured in* footcandles *or* lux.

16.17. Installed*. The attachment, or assembly fixed in place, whether or not connected to a power source, of any* outdoor light fixture*.*

16.18. LED*. Light emitting diode.*

16.19. Light Fixture*. See* Luminaire*.*

16.20. Light Trespass*. Light falling across property boundaries, on property not containing the originating light source.*

16.21. Lighting Zones*. The two* lighting zones *are defined on the Lighting Zone Map, by this reference made a part of this Code. Guidelines used to guide the delineation of the* lighting zones *are:*

A. Lighting Zone LZ 1. *This Zone includes predominantly residential areas, including small neighborhood commercial or industrial areas mostly surrounded by residential areas.*

B. Lighting Zone LZ 2. *This Zone includes urban areas with primary land uses for commercial, business and industrial activity, including urban multi-family residential areas mostly surrounded by commercial areas.*

16.22. Lumen. *Unit of luminous flux; used to measure the amount of light emitted by lamps.*

16.23. Luminaire. *A complete lighting assembly (including the lamp, housing, reflectors, lenses and shields), less the support assembly (pole or mounting bracket); a* light fixture. *Includes* luminous tubes, *lamps or similar devices, permanently* installed *or portable, used for illumination, decoration, or advertisement. Such devices shall include, but are not limited to lights used for:*

A. parking lot or parking garage *lighting;*
B. roadway and driveway lighting;
C. pedestrian or walkway lighting;
D. entryway lighting;
E. buildings and structures;
F. recreational areas;
G. landscape lighting;
H. billboard*s and other signs (advertising or other);*
I. product display area *lighting;*
J. building or structure decoration;
K. building overhangs and open canopies.

For purposes of determining total outdoor light output *from a* luminaire *(see Table 4.1), lighting assemblies which include multiple lamps within a single* luminaire *or on a single pole or standard shall be considered as a single unit (Figure 16.20).*

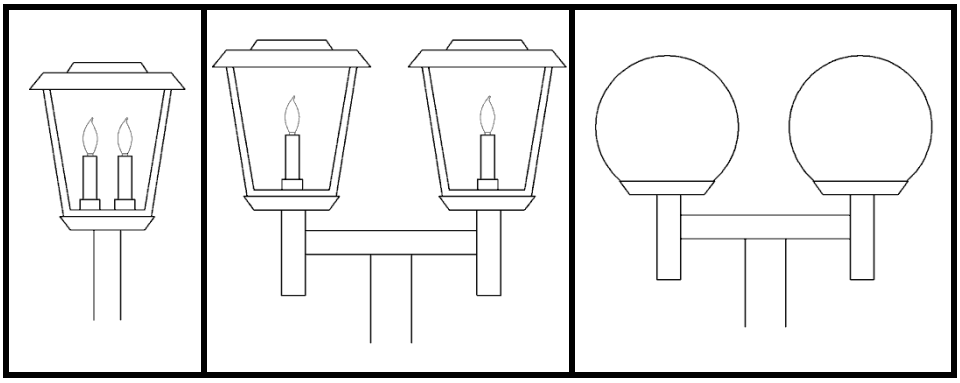

Figure 16.20 Light fixtures *with multiple lamps in a single fixture (left) and on a single pole (center, right)*

16.24. Luminance. *The intensity of light reflected or emitted from a unit area of surface, such as a sign face - measured in* nits.

16.25. Luminous Tube. *A glass tube filled with a gas or gas mixture (including neon, argon, mercury or other gasses), usually of small diameter (10-15 millimeters), caused to emit light by the passage of an electric current, and commonly bent into various forms for use as decoration or signs. A "neon" tube. Does not include common fluorescent tubes.*

16.26. Lux. *The standard metric unit used to measure* illuminance, *or the amount of light falling onto a surface, such as a roadway of athletic field. One* lux *equals one* lumen *per square meter. One* lux *equals approximately 0.1* footcandles.

16.27. Multi-Class Lighting. *Any outdoor lighting used for more than one purpose, such as security and decoration, such that its use falls under the definition of two or more Classes as defined for* Class 1, 2 *and* 3 lighting.

16.28. Neon Tube. *See* Luminous Tube.

16.29. Net Acreage. *The remaining area after deleting all portions for proposed and existing streets within a parcel, subdivision, or multiple contiguous parcels proposed for development.*

16.30. Nit. *The standard unit used to measure the brightness of a surface, such as of a sign.*

16.31. Opaque. Opaque *means that a material does not transmit light from an internal illumination source. Applied to sign backgrounds, means that the area surrounding any letters or symbols on the sign allows no light from any internal source to shine through it.*

16.32. Outdoor Light Fixture. *See* Luminaire.

16.33. Outdoor Light Output, Total. *The initial total amount of light, measured in* lumens, *from all lamps used in* outdoor light fixtures. *Includes all lights and* luminous tubes *used for* Class 1, Class 2, Class 3 *and* multi-Class lighting, *and lights used for external illumination of signs, but does not include lights used to illuminate* internally illuminated signs, luminous tubes *used in neon signs, or seasonal lighting from typical low-output lamps permitted between Thanksgiving and January 15th. For lamp types that vary in their output as they age (such as high pressure sodium, fluorescent and metal halide), the initial lamp output, as defined by the manufacturer, is the value to be considered. For determining compliance with Section 4.2 [*Total Outdoor Light Output*] of this Code, the light emitted from lamps and* luminous tubes *is to be included in the total output as follows:*

A. outdoor light fixtures *and* luminous tubes installed *on poles (such as parking lot* luminaires*) and light fixtures* installed *on the sides of buildings or other structures, when not shielded from above by the structure itself as defined in parts B, C or D below, are to be included in the* total outdoor light output *by simply adding the initial* lumen *outputs of the lamps and tubes;*

B. outdoor light fixtures *and* luminous tubes installed *under canopies, buildings (including* parking garage *decks), overhangs or roof eaves where all parts of the lamp, tube or* luminaire *are located at least five (5) feet but less than ten (10) feet from the nearest edge of the canopy, building edge or*

overhang are to be included in the **total outdoor light output** *as though they produced only one-quarter (0.25) of the lamp's or tube's rated initial* **lumen** *output;*

C. **outdoor light fixtures** *and* **luminous tubes installed** *under canopies, buildings (including* **parking garage** *decks), overhangs or roof eaves where all parts of the lamp, tube or* **luminaire** *are located at least ten (10) feet but less than thirty (30) feet from the nearest edge of the canopy, building edge or overhang are to be included in the* **total outdoor light output** *as though they produced only one-tenth (0.10) of the lamp's or tube's rated initial* **lumen** *output.*

D. **outdoor light fixtures installed** *under canopies, buildings (including* **parking garage** *decks), overhangs or roof eaves where all parts of the lamp, tube or* **luminaire** *are located thirty (30) or more feet from the nearest edge of the canopy, building edge or overhang are not to be included in the* **total outdoor light output**. *Such lamps must however conform to the lamp source and shielding requirements of Section 4.*

16.34. **Parking Garage**. *A multi-level or covered structure for parking that is open to the outside air. Includes parking facilities under buildings when the area is open to the outside at more locations than just the automobile entries and exits.*

16.35. **Person**. *Any individual, tenant, lessee, owner, or any commercial entity including but not limited to firm, business, partnership, joint venture, or corporation.*

16.36. **Residential.** *All single-family residential land uses, including all densities and types of housing such as single-family detached and duplexes, but excluding multi-family housing.*

16.37. **Searchlight**. *A lighting assembly designed to direct the output of a contained lamp in a specific tightly focused direction (a beam) with a reflector located external to the lamp, and with a swiveled or gimbaled mount to allow the assembly to be easily redirected. Such lights are used commonly to sweep the sky for advertisement purposes.*

16.38. **Sign, Externally Illuminated**. *A sign illuminated by light sources from the outside.*

16.39. **Sign, Internally Illuminated**. *A sign illuminated by light sources enclosed entirely within the sign cabinet and not directly visible from outside the sign.*

16.40. **Sign, Multicolor Changeable-Copy LED**. *A sign composed of* **LED**s *of more than one color and programmable to allow changing displays.*

16.41. **Sign, Multicolor Fixed-Copy LED.** *A sign composed of* **LED**s *of more than one color with a fixed (not changeable or programmable) copy display.*

16.42. **Sign, Neon**. *A sign including* **luminous tubes** *formed into text, symbols or decorative elements and directly visible from outside the sign cabinet.*

16.43. **Sign, On-Site Advertising**. *A sign used primarily to advertise goods or services offered on the same parcel on which the sign is located. Such a sign may include incidental non-advertising information (for example time and temperature; does not include publicly owned signs providing general interest information exclusively (such as road names or highway conditions).*

16.44. **Sign, Single-Color LED**. *A sign composed of single-color* **LED***s, including signs with fixed and changeable copy.*

16.45. **Sports Class I/II/III/IV**. *Level of sports play as defined by the Illuminating Engineering Society of North America. This level is primarily determined by the number and distance of spectators; the higher recommended illumination levels facilitate the spectator's ability to view the action.* **Sports Class IV** *is the most common level, and is typical of municipal and amateur league and social level sports, with minimal accommodations for spectators, typically including bleachers located close to the field.* **Sports Class III** *includes increased accommodation for spectators.* **Sports Class II** *and* **Sports Class I** *apply to large sports facilities where thousands of spectators may be located hundreds of feet from the field, and television broadcasting may be a consideration.*

16.46. **Spot Lamp**. *A specific form of lamp designed to direct its output in a specific direction (a beam) with a reflector formed from the glass envelope of the lamp itself. Such lamps are so designated by the manufacturers and are often used in residential outdoor area lighting (Figure 16.36).*

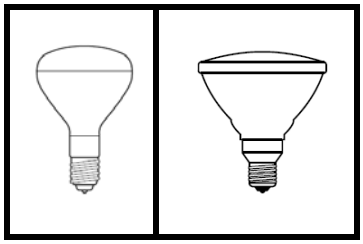

Figure 16.36. **Spot lamps**

16.47. **Temporary Lighting**. *Lighting which does not conform to the provisions of this Code and which will not be used for more than one thirty (30) day period within a calendar year, with one thirty (30) day extension. Temporary lighting is intended for uses which by their nature are of limited duration; for example holiday decorations, civic events, or construction projects.*

16.48. **Unshielded** *(***Light Fixture***). A* **lighting fixture** *constructed in such a manner that a fraction of the light emitted by the fixture, either directly from the lamp or a diffusing element, or indirectly by reflection or refraction from any part of the* **luminaire***, is projected above the horizontal.*

References

IDA (International Dark-Sky Association), 2010, Visibility, Environmental, and Astronomical Issues Associated with Blue-Rich White Outdoor Lighting *(http://docs.darksky.org/Reports/IDA-Blue-Rich-Light-White-Paper.pdf)*

IESNA (Illuminating Engineering Society of North America), 1998, Roadway Lighting, IESNA RP-20-98

IESNA (Illuminating Engineering Society of North America), 2000, The IESNA Lighting Handbook

IESNA (Illuminating Engineering Society of North America), 1999, Lighting for Exterior Environments, IESNA RP-33-99

IESNA (Illuminating Engineering Society of North America), 2001, Sports and Recreational Area Lighting, IESNA RP-06-01

Luginbuhl, C.B., 2002, Light Output of Internally Illuminated Signs*, presented at the International Dark-Sky Association Annual Meeting, Tucson, Arizona, 17-19 March 2002*

Luginbuhl, C.B., Lockwood, G.W., 2008, Reduced Energy Use and Carbon Dioxide Emissions from Improved Outdoor Lighting Efficiency in Arizona, *https://docs.google.com/Doc?docid=0AV4AoyGMTDmzZGZuNTVjcWZfMjA0Zzh2OWRzZDk&hl=en*

Luginbuhl, C.B., Walker, C.E., and Wainscoat, R. J., 2009, Lighting and Astronomy*, Physics Today, December 2009*

Luginbuhl, C.B., et al., 2009, From The Ground Up I: Light Pollution Sources in Flagstaff, Arizona*, Publications of the Astronomical Society of the Pacific, 121: 185*

Luginbuhl, C.B., et al., 2010, Digital LED Billboard Luminance Recommendations – How Bright Is Bright Enough?*, (draft), MAG DSSG*