Wireline 911 Call

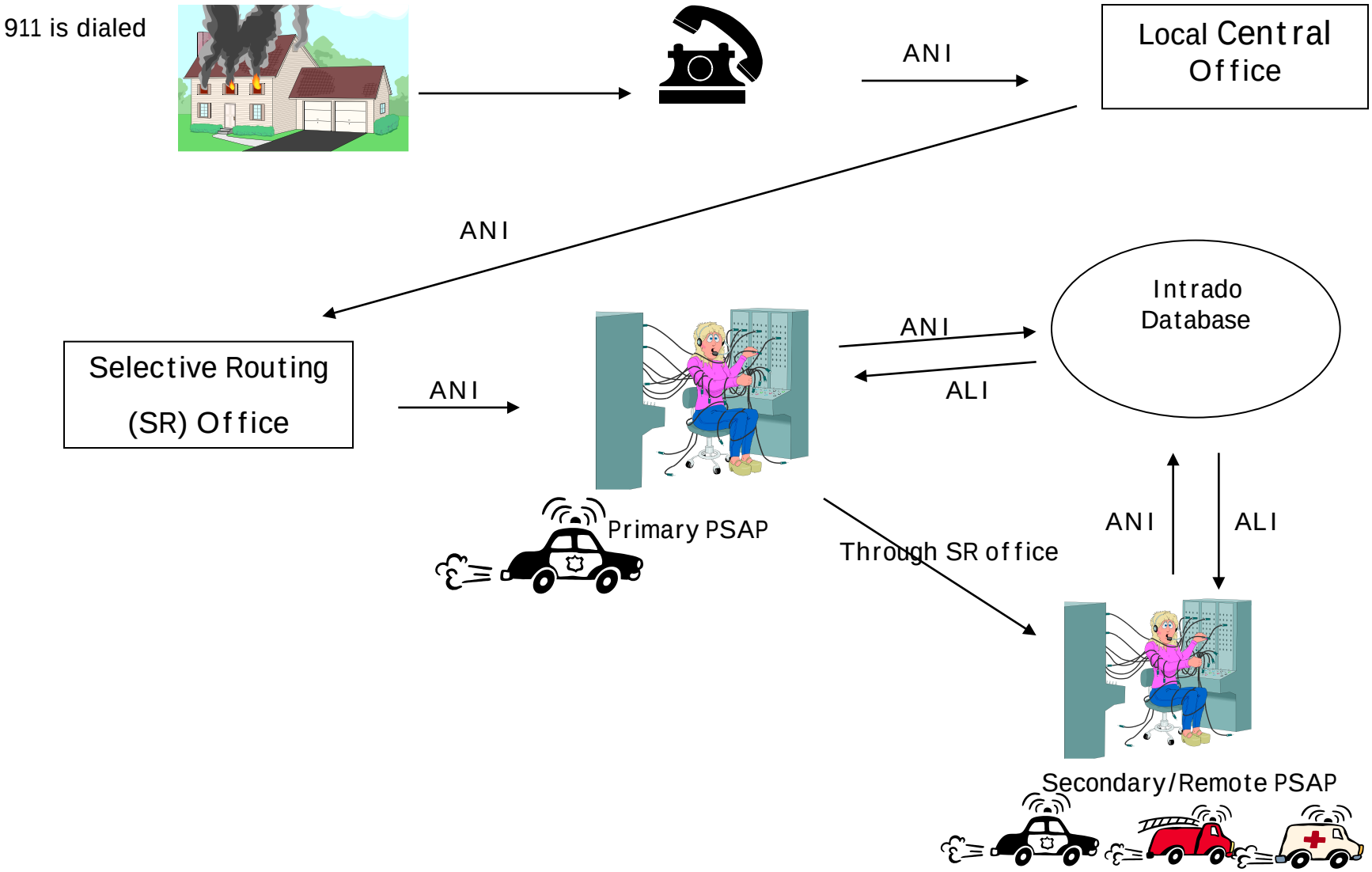
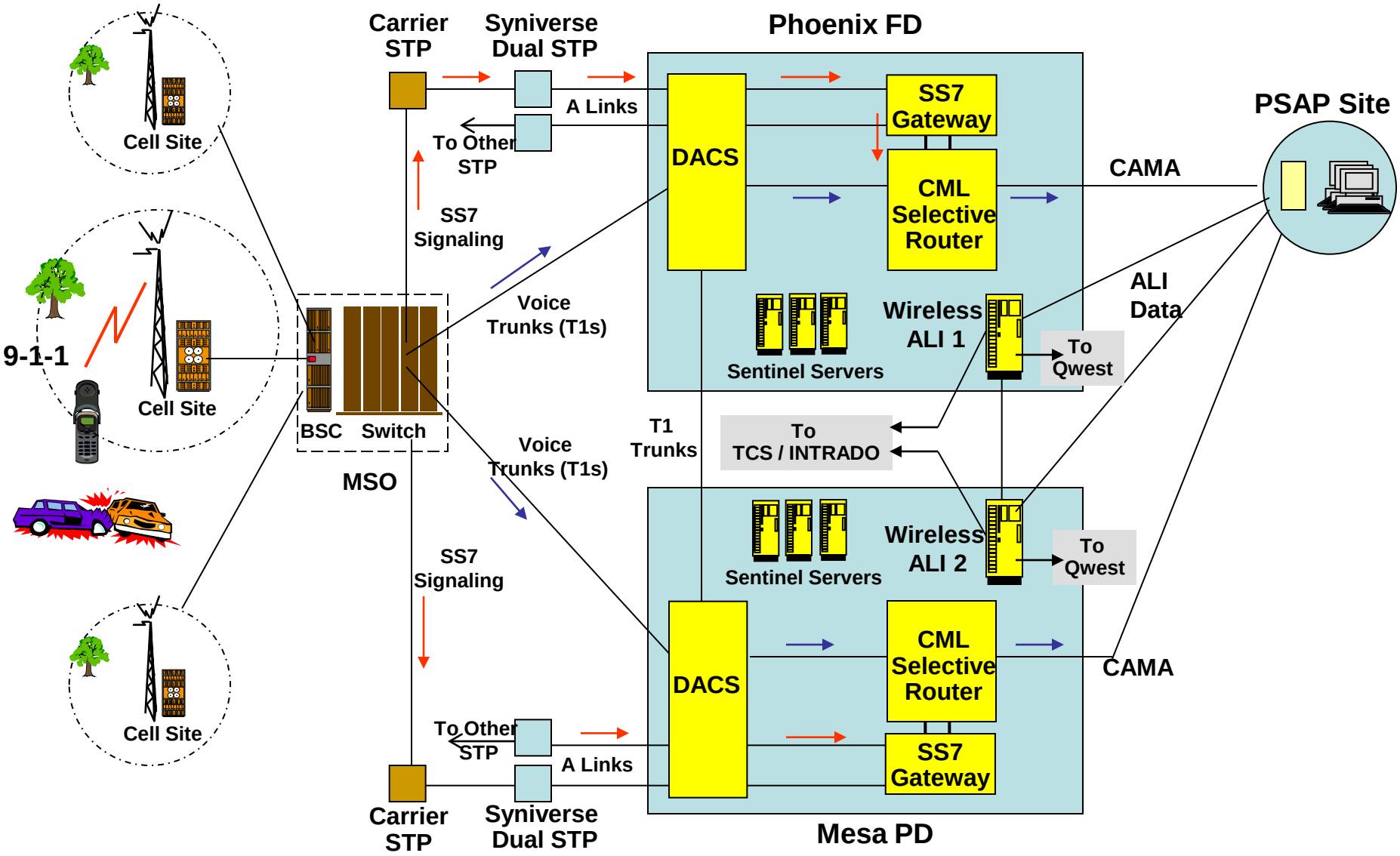
Wireless 911 Call