I-10 INTEGRATED CORRIDOR MANAGEMENT SYSTEM

CONCEPT OF OPERATIONS FINAL REPORT

August 31, 2007

Prepared for MARICOPA ASSOCIATION of GOVERNMENTS

Prepared by Kimley-Horn and Associates, Inc.

TABLE OF CONTENTS

EXECUTIVE SUMMARY

1. INTRODUCTION AND BACKGROUND 1-1

2. INVENTORY 2-1

2.1 Freeway Infrastructure Inventory 2-1
2.1.1 Freeway Lanes and Near-Term Capacity Enhancements 2-1
2.1.2 Freeway Management System Infrastructure 2-3
2.2 Arterial Infrastructure Inventory 2-3
2.2.1 Overview of the Arterial Network in the ICMS Corridor 2-3
2.2.2 Arterial Traffic Signal Systems 2-5
2.2.3 Arterial ITS Infrastructure and Capabilities 2-6
2.3 Public Transportation Inventory 2-7
2.3.1 Transit Services and Routes 2-7
2.3.2 Park and Ride Locations 2-9
2.3.3 Vanpool and Rideshare Programs 2-9
2.3.4 Transit ITS Infrastructure 2-9
2.3.5 Light Rail Transit Planning 2-11
2.4 Regional Systems to Support Integrated Corridor Management 2-11
2.4.1 Transportation Management and Operations Centers 2-11
2.4.2 Incident Management and Incident Response 2-13
2.4.3 Traveler Information Systems 2-13
2.4.4 Regional Connectivity and Center-to-Center Communications 2-14
2.5 Inventory of Operational Procedures to Support ICMS in the I-10 Corridor 2-15
2.5.1 Operational Procedures for Traffic Management/Operations 2-15
2.5.2 Operational Procedures for Incident Management 2-15
2.5.3 Special Event Management Plans 2-16

3. STRATEGIES AND PERFORMANCE MEASURES 3-1

3.1 ICMS Strategies 3-1
3.1.1 Freeway Management Strategies 3-1
3.1.2 Arterial Management Strategies 3-3
3.1.3 Public Transportation Strategies 3-4
3.1.4 Traveler Information Strategies 3-6
3.1.5 Outreach and Public Information Strategies 3-8
3.2 Performance Measures 3-11
3.3 Potential ICMS Priorities 3-13

4. PROJECT ARCHITECTURE 4-1

4.1 Introduction and Architecture Development Process 4-1
4.2 Market Packages to Support ICMS in the I-10 Corridor 4-2
4.3 Architecture Interconnects 4-6

TABLE OF CONTENTS

4.3.1 Regional System Interconnect Diagram 4-6
4.3.2 Subsystem Descriptions 4-8
4.3.3 System Concept Diagrams 4-11
4.3.4 Process Specifications 4-12
4.4 Implementation 4-17
4.4.1 Methodology 4-17
4.4.2 Applicable ITS Standards 4-17

5. INSTITUTIONAL, TECHNICAL, OPERATIONAL, AND FINANCIAL ISSUES 5-1

5.1 Introduction 5-1
5.2 Methodology and Rationale 5-2

6. I-10 ICMS OPERATIONS GUIDELINES AND PROCEDURES 6-1

6.1 Introduction 6-1
6.2 Operational Scenarios 6-2
6.3 Operational Guidelines for Typical Daily Operations 6-4
6.3.1 Operational Strategies 6-4
6.3.2 Normal Daily Agency Operations 6-4
6.3.3 Critical Dependencies 6-7
6.4 Operational Guidelines for a Major Incident on I-10 6-7
6.4.1 Operational Strategies 6-9
6.4.2 Major Incident on I-10 Agency Operations 6-9
6.4.3 Critical Dependencies 6-12
6.5 Operational Guidelines for an Arterial Incident 6-12
6.5.1 Operational Strategies 6-14
6.5.2 Major Incident on Arterial Agency Operations 6-14
6.5.3 Critical Dependencies 6-17
6.6 Operational Guidelines for Freeway Construction/Work Zone 6-17
6.6.1 Operational Strategies 6-18
6.6.2 Freeway Construction/Work Zone Agency Operations 6-19
6.6.3 Critical Dependencies 6-23
6.7 Operational Guidelines for Arterial Construction/Work Zones 6-23
6.7.1 Operational Strategies 6-24
6.7.2 Arterial Construction/Work Zone Agency Operations 6-24
6.7.3 Critical Dependencies 6-27
6.8 Operational Guidelines for Special Event Management 6-27

7. IMPLEMENTATION CONCEPT AND ACTIONS 7-1

7.1 Introduction 7-1
7.2 Implementation Mechanisms 7-1
7.2.1 ADOT 7-1
7.2.2 Maricopa Association of Governments 7-2
7.2.3 Valley Metro and Valley Metro Rail 7-2
7.2.4 Maricopa County DOT 7-4

TABLE OF CONTENTS

7.2.5 City of Avondale *7-5*
7.2.6 Town of Buckeye *7-5*
7.2.7 City of Goodyear *7-6*
7.2.8 City of Phoenix *7-7*
7.3 Next Step Actions 7-7
7.3.1 Key Corridor – McDowell Road *7-10*
7.3.2 Developing Alternate Route Guides *7-11*
7.3.3 Multi-jurisdictional Traffic Signal Coordination Timing on Key Corridors *7-11*
7.3.4 Multi-Agency Operations Plan *7-12*
7.3.5 Developing Operational Agreements among Agencies for Corridor Operations and Information *7-12*
7.3.6 Outreach and Awareness *7-12*
7.3.7 Fostering Closer Coordination for Multi-Modal Planning to Elevate Priority of Transit Strategies *7-13*
7.3.8 Developing a Model to Predict the Network-wide Impacts of the Proposed ICMS Strategies Collectively under various Scenarios *7-13*

LIST OF FIGURES

Figure 1 – Corridor Overview 1-1
Figure 2 – Weekday Corridor Traffic Volumes (2003) 1-2
Figure 3 – I-10 ICMS Concept of Operations 1-4
Figure 4 – ADOT I-10 Improvement Program and Timeframe 2-2
Figure 5 – ADOT FMS Infrastructure 2-4
Figure 6 – Existing and Planned Arterial ITS Infrastructure 2-8
Figure 7 – Transit Routes and Park-and-Ride Locations 2-10
Figure 8 – MAG ICMS Regional System Interconnect Diagram 4-7
Figure 9 – Arterial Management Concept Diagram 4-13
Figure 10 – Freeway Management Concept Diagram 4-14
Figure 11 – Traveler Information Concept Diagram 4-15
Figure 12 – Transit Management Concept Diagram 4-16

TABLE OF CONTENTS

LIST OF TABLES

Table 1 – ADOT I-10 Reconstruction (2007-2010) 2-2
Table 2 – Summary of Arterial Signal Systems 2-5
Table 3 – Arterial CCTV Locations 2-6
Table 4 – Existing Transportation Operations and Dispatch Centers 2-11
Table 5 – Incident Management/Response Teams 2-13
Table 6 – Freeway: Enhance Freeway Monitoring 3-2
Table 7 – Freeway: Workzone Management and Control 3-2
Table 8 – Freeway: Incident Management 3-2
Table 9 – Arterial: Enhance Arterial Monitoring and Control 3-3
Table 10 – Arterial: Implement Interagency Corridor Operations 3-3
Table 11 – Arterial: Improve Arterial Incident Capabilities Response Time 3-4
Table 12 – Arterial: Provide Enroute Traveler Information on Arterials 3-4
Table 13 – Transit: All Strategies 3-5
Table 14 – Traveler Information: Enhance 511 3-6
Table 15 – Traveler Information: Innovative Tools 3-7
Table 16 – Traveler Information: Expand Availability 3-8
Table 17 – Travel Information: Enhance Media Coverage 3-8
Table 18 – Outreach: Promote Awareness of Traveler Information 3-9
Table 19 – Outreach: Develop Campaigns 3-10
Table 20 – Outreach: Commuter Focused Outreach 3-10
Table 21 – ICMS Performance Measures and Goals 3-11
Table 22 – Market Package Selection and Applicability to ICMS 4-2
Table 23 – Architecture Subsystem Descriptions 4-8
Table 24 – Applicable ITS Standards 4-18
Table 25 – ICMS Institutional Issues 5-3
Table 26 – ICMS Technical Issues 5-4
Table 27 – Operational Issues 5-5
Table 28 – ICMS Financial and Funding Issues 5-6
Table 29 – Various Scenario Example Strategies 6-3
Table 30 – Normal Daily Operations by Agency 6-5
Table 31 – Major Incident on I-10 Operations by Agency 6-10
Table 32 – Major Incident on Arterial Operations by Agency 6-15
Table 33 – Freeway Construction/Work Zone Operations by Agency 6-19
Table 34 – Arterial Construction/Work Zone Operations by Agency 6-25
Table 35 – Near-Term ICMS Recommendations – 2008 to 2013 7-8
Table 36 – Longer Term ICMS Recommendations – 2014 and Beyond 7-10

EXECUTIVE SUMMARY

Project Background and Summary

The Maricopa Association of Governments (MAG) has established a regional goal of implementing an Intelligent Transportation System Integrated Corridor Management System (ITS-ICMS) along one or more heavily traveled freeway/arterial corridors in the MAG region. The I-10, Van Buren Street, McDowell Road, and Maricopa County 85 (MC 85) corridor was selected to develop a Concept of Operations for an ICMS for several key reasons:

- It is a vital trucking route that connects Phoenix to the southern California markets, as well as commercial traffic headed east toward Texas and Florida;
- The Arizona Department of Transportation (ADOT) is embarking on a significant capacity enhancement project for I-10 in the Southwest Valley, which will add additional general purpose lanes and high occupancy vehicle (HOV) lanes through this segment of the corridor;
- I-10 serves a wide range of commuter traffic. The cities of Phoenix, Avondale, Goodyear, and Buckeye are experiencing unprecedented growth; in 2020, population in this area is estimated at over 880,000, which is a 270 percent increase; and
- This corridor is a vital link to downtown major event venues, employment centers, and multimodal transfer centers.

MAG and its partners in the I-10 ICMS recognize the importance of swift and collective action to address the congestion problems in the I-10 Corridor – not only for commuters in the ever expanding metropolitan area, but also to maintain efficient movement of goods on this nationally significant transportation facility.

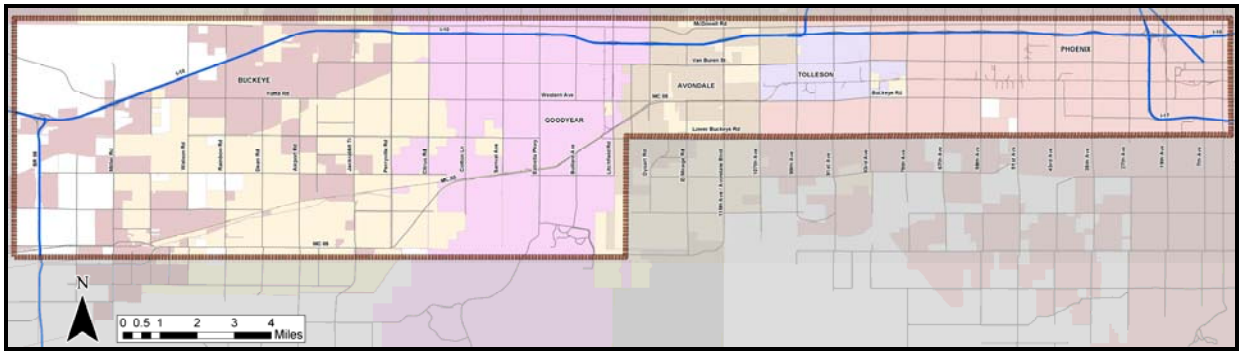

I-10 ICMS Corridor Overview

One of the driving factors for developing the I-10 ICMS Concept of Operations was to take advantage of a competitive federal grant funding opportunity. In April 2007, MAG and its partners submitted federal grant applications to be considered for an Urban Partner as well as for an Operational Test to Mitigate Congestion (OTMC); both of these opportunities were available from the United States Department of Transportation/Federal Highway Administration as part of the national Congestion Initiative. The initial strategies and concepts developed as part of this Concept of Operations were focused on the timeframes and constraints of the OTMC grant which would potentially provide federal funding to implement high-impact technology and coordination strategies on the transportation networks within the corridor. In August, 2007, MAG was notified

that this corridor was not selected to receive federal funding. As such, the final recommendations contained in the Concept of Operations were developed based on current available funding and regional programming processes.

Goals of the I-10 ICMS

The main objective of the I-10 ICMS Concept of Operations was to facilitate all stakeholders in the region to come together to develop a comprehensive, integrated plan to manage and reduce congestion in the I-10 Corridor. There are seven key goals and objectives for the I-10 ICMS:

Goal 1: Achieve maximum throughput on freeways and arterials in the ICMS operational test area;

Goal 2: Improve safety and mobility by reducing incident response and clearance times on freeways and arterials;

Goal 3: Make efficient use of technologies and resources to manage day-to-day demands and optimize the multi-modal network;

Goal 4: Implement new technologies and systems and integrate with existing agency systems to achieve seamless system operations;

Goal 5: Reduce demand by balancing trips among modes and networks, expanding commute alternative programs, and educating travelers about commute options and alternatives;

Goal 6: Enhance traveler information resources, and promote awareness among the public about travel conditions information that is available to them; and

Goal 7: Leverage investments among modes and agencies to effectively mainstream integrated corridor management approaches.

Existing and Planned Inventory to Support ICMS in the I-10 Corridor

Future operational enhancements in the I-10 corridor to support ICMS will build on the existing systems and infrastructure of the transportation networks – freeway, arterial and transit. ITS infrastructure in this portion of the corridor is currently limited, although arterial management infrastructure continues to be deployed as part of city and county capital improvement programs.

Freeway ITS Infrastructure

ADOT has been operating a freeway management system (FMS) for more than 10 years. Within the I-10 Corridor, the instrumented portions include I-10 west to approximately the SR-101 interchange. This FMS includes: loop detectors for data collection, closed-circuit television (CCTV), ramp meters, dynamic message signs and center-to-field communications. ADOT's Traffic Operations Center is staffed 24/7/365, and provides day-to-day traffic system monitoring and management, event management, traveler information and incident management.

Within the portion of the I-10 ICMS corridor, FMS infrastructure is in place west to 83rd Avenue and additional communications infrastructure is being installed, which will provide

fiber along I-10 to the I-10/SR-101 interchange. There is no FMS infrastructure beyond the Loop 101 interchange with the exception of two additional dynamic message signs (DMS) that are being installed west of the SR-101 interchange (99th Avenue, Bullard Avenue). A 2016 FMS project is planned that will instrument the segment of I-10 from 83rd Avenue to Dysart Road. No future phases west of Dysart Road are currently planned.

Arterial Management Systems

The arterial network in the I-10 ICMS project area includes east-west and north-south arterials in seven jurisdictions: Maricopa County; the Cities of Phoenix, Avondale, Goodyear, and Tolleson; Town of Buckeye; ADOT right-of-way. The existing traffic signals in this arterial network are currently operated and maintained by ADOT, Maricopa County Department of Transportation (MCDOT), and the Cities of Phoenix, Goodyear, Avondale, and Tolleson.

Key east-west arterials in the I-10 ICMS project area traverse multiple jurisdictions, and include:

- McDowell Road;
- Van Buren Street;
- Buckeye Road/Western Avenue/Yuma Road; and
- MC 85.

Intersections in the corridor are operated and maintained by ADOT, MCDOT, and the cities of Phoenix, Goodyear, Avondale, and Tolleson. These jurisdictions currently have communications to and/or between some of their signalized intersections, but not to all intersections.

Avondale currently operates a central signal system which utilizes wireless technology to communicate with approximately 19 intersections. Beyond traffic signals, detection, and four CCTV (in Avondale), there is limited ITS infrastructure, although more is planned in the very near term. Avondale plans to implement a traffic management center (TMC) in the next two to three years; currently, the system is managed from the signal shop.

Goodyear is in the process of procuring a central signal system software, and Capital Improvement Projects to provide a fiber optic backbone and communication to some City of Goodyear intersections are currently underway. Goodyear is planning to implement a TMC within the next two to three years, and is currently developing an ITS Strategic Plan that will map out future ITS projects and priorities.

The Phoenix TMC monitors the City of Phoenix's ITS infrastructure, including the TranSuite traffic signal system, CCTV, video detection, and arterial DMS. At present, there is limited ITS infrastructure on the City of Phoenix arterials in the ICMS corridor area other than traffic signals (the majority of Phoenix's ITS infrastructure is concentrated in the downtown area).

MCDOT is responsible for the MC 85 (Buckeye Road) corridor within the project area. MCDOT currently operates a TMC from which operators can communicate with and monitor the majority of the signalized intersections under their jurisdiction. From the TMC, MCDOT also monitors their CCTV images, seven of which are located along MC 85.

Transit Infrastructure

Valley Metro and City of Phoenix Transit provide fixed-route and demand-response services along key arterials throughout the I-10 ICMS area. Express and Rapid routes also utilize arterials as well as the I-10 freeway corridor. Currently, there is not express bus service to the West Valley community of Buckeye. Valley Metro plans to implement the Papago Freeway Connector express service in July 2008, which will include four inbound and four outbound trips each weekday. The Town of Buckeye plans to partner with private sector on a shared-use temporary park and-ride location, which will be implemented with the deployment of the express bus service to Buckeye. The second extension of bus service is Route 17A on McDowell Road from 79th Avenue west, hourly service Monday thru Friday beginning January 2008 and funded by the City of Avondale.

Vanpool and rideshare programs are very active in the metropolitan area, and in fact, vanpools are at capacity. Valley Metro currently administers a fleet of over 300 vans for its Vanpool Program (these vanpools operate valleywide). Valley Metro also sponsors ShareTheRide.com to provide the general public an easy and free way to find others in the Valley who are interested in sharing the ride to work in a carpool or vanpool.

Transit in the region has made substantial investments over the last several years to upgrade and expand the systems to support real-time system and vehicle monitoring, communications, dispatch and operations center capabilities, and transit traveler information. Key systems include:

- The Transit Operations and Control Center (OCC) serves as the key dispatch and operations hub for transit operations valleywide. Operators at the OCC view ADOT's CCTV images along freeway corridors to monitor traffic as well as freeway traffic conditions near the park-and-rides.
- Automatic Vehicle Location is deployed on almost the entire fleet, and this is used to monitor transit schedule adherence and provide next-bus arrival times.
- Buses are also equipped with on-board digital video recorders, audible bus stop announcements, automated passenger counters and fare boxes.
- Valley Metro Rail has identified the I-10 corridor (west to the 79th Avenue Park and Ride) as a consideration for a future extension of the Light Rail Transit (LRT). An alternatives analysis is underway and is scheduled for completion in 2008.

Regional Systems and Programs to Support ICMS

There are several key regional systems and programs that are already actively supporting important operational functions and strategies. Although investments in these regional and statewide programs have benefits that go beyond the ICMS corridor area, they provide a vital support function for many of the high-priority operational issues identified by stakeholders during the Concept of Operations development:

Function	Owning Agency/System
Traffic Management and Operations Centers	Arizona DOT (Freeway Management, Statewide Operations) Maricopa County DOT City of Phoenix Valley Metro/City of Phoenix Transit Cities of Avondale and Goodyear (future TMCs)
Incident Management and Response	Arizona DOT ALERT Freeway Response Team Arizona Department of Public Safety Freeway Service Patrol Maricopa County DOT REACT Arterial Incident Response Automated data exchanges between ADOT, MCDOT and Public Safety for incident data
Traveler Information	ADOT 511 and az511.gov (statewide traveler information) ADOT freeway dynamic message signs MAG and ADOT mobile traveler information portal Transit phone and web traveler information (valleymetro.org) Local media traffic advisory broadcasts Private sector web and wireless traveler information resources
Regional Connectivity and Center-to-Center Communications	Regional Community Network Center-to-Center System (including transportation and public safety)

Issues Affecting ICMS Implementation and Operations

While stakeholders agree there is a strong need to be able to manage and integrate networks within this corridor to optimize operations, safety, and mobility, partner agencies also recognize there are many challenges for ICMS implementation. The success of the I-10 ICMS project depends on the support from the stakeholders and the necessary modifications on practicing operations as well as the reliability of the adopted technologies. As part of the Concept of Operations, potential issues, potential issues are being documented and considered.

These issues span four key focus areas. Chapter 5 of the Concept of Operations documents an expanded list of these issues, which are briefly summarized below:

Institutional issues are part of an on-going process of coordination and collaboration between I-10 Corridor stakeholders.	▪ The Long Range Transportation Plan allocates funding and project priorities for regional agencies, and provides limited flexibility to accelerate or add projects without additional funding. ▪ Getting the right stakeholders into the planning process is a challenge – ICMS will rely on participation from freight, private sector and additional public sector agencies.
Operational issues are practice-related issues that must be resolved prior to system implementation to ensure that the proposed ICMS will be adopted consistently and ultimately improve the overall I-10 Corridor performance. These could include specific procedures or specific system operational issues.	▪ A key focus of the ICMS was looking at east-west alternates to I-10. In order to be effective, the ICMS also needs to consider N/S demands of key arterials, freeway/arterial coordination and increased growth and demand. ▪ Rail freight volumes will continue to increase, and arterial operations need to factor in the operational challenges posed by rail crossings. ▪ There is limited arterial traveler information available to motorists to provide advanced warning of work zones, incidents, or detours. ▪ A key need is data collection, for both the freeway and arterial networks. Real-time data is needed to support active ICMS operations among freeway and arterial management agencies.
Technical issues are known and foreseen issues relating to technology – what is deployed, how to effectively utilize it, challenges with coordinating systems across jurisdictions, as well as system compatibility.	▪ FMS infrastructure is not planned for I-10 west of Loop 101 until 2016 at the earliest. There is a key need to identify alternatives for data collection. ▪ Arterial management systems are also not fully deployed within the corridor. Agencies are phasing in system components as funding permits. ▪ Limited communications infrastructure also limits the ability to monitor and change traffic management strategies to respond to real-time conditions.
Financial issues are also an important consideration for the I-10 ICMS Concept of Operations. Significant enhancements to systems, technologies and ongoing operations within the corridor will require a financial commitment.	▪ The I-10 ICMS was not selected for federal funding. As a result, agencies will need to identify and prioritize high-impact ICMS strategies and implement over time with available regional and local funding and programming processes. ▪ Opportunities to accelerate programmed projects to support ICMS will need to be explored. Partnerships among public agencies as well as public/private partnerships could help to accelerate the timeframe for longer-range projects.

ICMS Operations Procedures and Guidelines

Existing Operational Procedures

To date, there is a limited number of formal operational procedures or policies in place for traffic management within the ICMS Corridor area. Agencies recognize that as system and network operations become increasingly interjurisdictional, there is a stronger need for more formal operational procedures to be developed and agreed to by partners.

As part of the Regional Concept of Transportation Operations, MAG initiated development of procedures for Corridor Management and Freeway and Arterial Coordination. The intent was that these documented procedures would evolve over time. AZTech™ has also developed guidelines and procedures for operations of CCTV, DMS and center-to-center communications. MCDOT and partners in the northwest valley developed an operations plan for Bell Road, which includes shared use and joint operations among MCDOT, Peoria and Surprise of some devices along that corridor. Individual agencies typically maintain and update procedures for their respective systems.

Incident management and response agencies have well-developed procedures and guidelines; these are typically developed and agreed to by multiple partners, and are well documented and utilized.

Perhaps one of the most well-defined operational procedure plan in the Southwest Valley is the plan developed for special event traffic management at Phoenix International Raceway. This Plan has been evolving over the last several years, and is reviewed and updated following each major event at Phoenix International Raceway (PIR). Key elements of the plan include pre-event coordination, event ingress and egress, system operations during the event, incident management, traveler information, and partner roles and responsibilities.

Recommended Operational Procedures and Guidelines to Support ICMS

The ICMS Concept of Operations identified recommended procedures, roles and responsibilities for the partner agencies within the corridor under a variety of different scenarios. These recommended procedures were intended to be high-level, yet illustrate specific actions and responsibilities that agencies would carry out during different events on the networks – such as implementing detours, communicating with other agencies, providing information to motorists, and other key functions.

Scenarios included:

- Day-to-day “typical” operations;
- Incidents on I-10 and on arterials;
- Work zones on the freeway and on arterials; and
- Special events.

For each scenario, recommended operational strategies, specific operational actions by agencies, and critical dependencies were identified. Due to the limited ITS infrastructure currently in the I-10 corridor area, the majority of the operational procedures in the near-term focus on enhanced coordination among agencies, and factor in the limited automated

information sharing capability. As systems are deployed and center-to-center connections are established over time, this will foster an increased capability for agencies to be able to monitor and alter traffic management strategies in real-time and in response to real-time traffic conditions. It will also enhance agencies' abilities to communicate and share information with partners to support more coordinated regional strategies. For each of the scenarios, potential 'future' strategies and procedures were identified that would build on the increased infrastructure and connectivity.

Implementation Concepts and Recommended Next Steps

As the I-10 ICMS evolved, it became clear that federal grant funds would not be available to this region to support the ICMS strategies and systems identified by stakeholders. As a result, the Concept of Operations needed to focus on recommending high-priority projects that could be implemented over time with available local and regional funds and programming processes.

Implementing ICMS strategies in the I-10 corridor will require an incremental phased approach over several years. Arterial management agencies, including Phoenix, Avondale, Goodyear, Buckeye and MCDOT all have at least one project in the upcoming TIP that will support the goals of ICMS. Both MCDOT and MAG have got key regional initiatives aimed at enhancing signal coordination, arterial traveler information, and agency information exchanges; although these are more regional in nature, they are definitely in line with ICMS goals and objectives, and will serve to enhance the overall strategy within the corridor.

As the region moves toward the next TIP funding and programming cycle (2013), the intent of the recommendations is to summarize ICMS initiatives that should be pursued, including opportunities for agencies to partner on joint projects. MAG also carries out an annual Traffic Signal Optimization Program (TSOP), whereby agencies can apply for funds to enhance signal operations along a particular corridor. It is important to note that this Concept of Operations is not intending to serve as a deployment plan; however, through the discussions to develop the Concept of Operations for ICMS, key priorities have emerged. Despite the fact that significant federal funds will not likely be received, agencies can still move forward with incremental enhancements that will ultimately support the broader ICMS goals.

Near-term recommended projects and programs are shown below. Near term refers to projects that should be pursued or accelerated in the 2008-2013 timeframe, including potential projects to be submitted for the 2013 TIP programming cycle:

Near-Term ICMS Recommendations – 2008 to 2013

Project Name/Description	Agency	Cost Estimate	Timeframe	Notes
Alternate Route Guide	Joint Project – Avondale, Goodyear, Phoenix, MCDOT; will also involve ADOT and Buckeye	75-100k	2008	Price may vary based on area covered and data available. MCDOT previously prepared an Alternate Route Guide for Bell Road between 183rd Avenue and 83rd Avenue (approx. 12.5 miles) for 60k in 2006.

Near-Term ICMS Recommendations – 2008 to 2013 (continued)

Project Name/Description	Agency	Cost Estimate	Timeframe	Notes
TSOP – City of Avondale	Avondale	$20-30K per project annually	2008 2009 2012	Identify key corridors for TSOP coordination. Joint project with McDowell
TSOP – City of Goodyear	Goodyear	$20-30K per project annually	2008 2009 2012	Identify key corridors in Goodyear
TSOP – City of Phoenix	Phoenix	$20-30K per project annually	2008 2009 2012	Identify key corridors in Phoenix in the ICMS corridor area. Emphasis on McDowell Road
TSOP – MCDOT	MCDOT	$20-30K per project annually	2009 2012	Update to coordination timing on MC 85
McDowell Road CCTV	Avondale, Goodyear and Phoenix	$2.5-5k per location for install	2012 and 2013	Installation and communication to camera could also be incorporated to traffic signal design/construction
RCN Expansion to include Goodyear and Avondale	Joint project – Goodyear, ADOT and Avondale	$1.75M	2013	Expand RCN to include Goodyear and Avondale TMCs. Both should be complete. Could potentially be accelerated if close-out funds are available. Fiber for this phase could be utilized for FMS expansion west of Loop 101.
Arterial DMS – McDowell, potentially other locations (including N/S arterials)	Avondale, Goodyear and Phoenix	$125k per install	2013	Cost is construction cost. Design costs will vary based on funding source.
McDowell Road and Van Buren Communications Infrastructure	Phoenix		2008	Phoenix has a programmed project to widen McDowell between 83rd and 75th Avenues, as well as Van Buren from 67th to 75th Avenues. Recommend installing communications and detection as part of this widening, if not already planned.
Analysis of Data Collection Options for Freeways and Arterials	MAG	$75	2009	Recommend conducting a comprehensive analysis of data collection options for freeway and arterials. In the event that FMS is not deployed with detection, look at alternatives for private sector or non-infrastructure based strategies.
Multi-agency ICMS Operations Plan	MCDOT ADOT Goodyear Avondale Buckeye Phoenix	$50K	2013	A detailed operations plan will require that additional devices be in place. It is recommended that the Operations Plan be developed following additional deployment.

Longer term project recommendations are also included (2014 and beyond), with a specific focus on FMS deployment and arterial ITS infrastructure. With these priorities identified, agencies can begin planning ahead for the next round of programming.

Longer Term ICMS Recommendations – 2014 and Beyond

Project Name/Description	Agency	Cost Estimate	Timeframe	Notes
Phase 17 FMS on I-10, 99th Avenue to Dysart	ADOT	$5M	2016	Assumes conduit installed as part of I-10 widening. Phase 17 is part of the current FMS plan.
Future phase FMS on I-10, Dysart to Citrus	ADOT	$8M	2018	Assumes no conduit installed in this segment
Additional ITS Devices on arterials (CCTV, DMS).	Avondale Goodyear Phoenix MCDOT Buckeye	Varies	2014 2015 2016 2018	Avondale and Goodyear will be defining project priorities through their strategic plans.
24/7 TMC at MCDOT to serve as after-hours back-up for cities	MCDOT	$125K annually	2014	Cost is for 2 additional staff to cover expanded hours.

1. INTRODUCTION AND BACKGROUND

The MAG has established a regional goal of implementing an Intelligent Transportation System Integrated Corridor Management System (ITS-ICMS) along one or more heavily traveled freeway/arterial corridors in the MAG region. MAG considered several urban area corridors for this effort. Due to the high degree of existing traffic congestion, rapid rate of land development, significant prior and planned investments in ITS infrastructure, and near term reconstruction work planned in the I-10 Corridor, the I-10, Van Buren Street, McDowell Road, and Maricopa County 85 (MC 85) corridor was selected to develop a Concept of Operations for an Integrated Corridor Management System.

The I-10 ICMS corridor is approximately 32 miles long and three to four miles wide with a system of urban interstate freeway facilities, local urban arterial streets, and express and local transit routes. The corridor is shown in **Figure 1**.

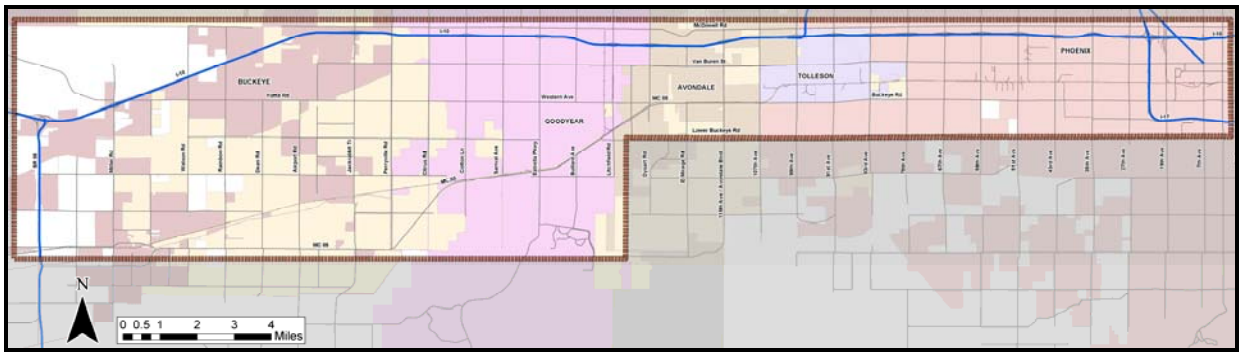

Figure 1 – Corridor Overview

This corridor is a vital trucking route that connects Phoenix to the southern California markets, as well as commercial traffic headed east toward Texas and Florida. In addition, the corridor contains a large number of inter-modal facilities and warehouses with rail and pipeline connections that generate significant truck traffic. In early 2007, I-10 was also selected as part of the "Corridors of the Future" program by the Federal Highway Administration (FHWA) based on its potential of reducing congestion significantly using innovative financing and project delivery techniques.

Average daily traffic volumes along I-10 within the ICMS Corridor range from 280,000 vehicles near downtown to 46,000 at the far west end of the corridor. With the increased residential and commercial development on the corridor, these volumes are expected to increase sharply. Arterial corridors in the operational test area range from 2,000 up to 30,000 for weekday average daily traffic. Freeway and arterial traffic volumes (2003 data) are shown in **Figure 2**. MAG is in the process of updating this data with 2006/2007 volumes; however, this information was not finalized at the time of this writing.

Kimley-Horn and Associates, Inc.

MARICOPA ASSOCIATION of GOVERNMENTS

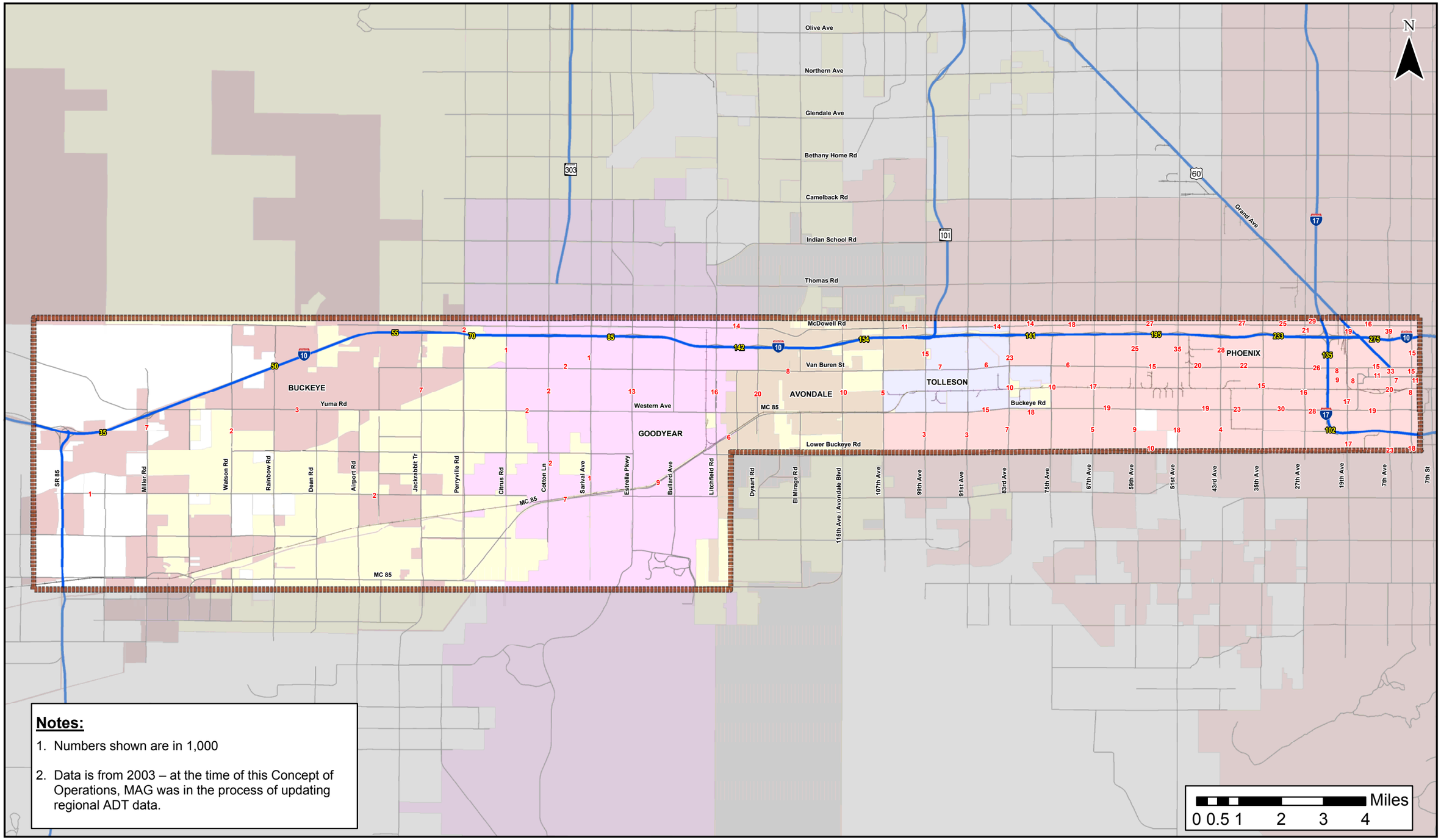

Notes:

1. Numbers shown are in 1,000
2. Data is from 2003 – at the time of this Concept of Operations, MAG was in the process of updating regional ADT data.

Figure 2 – Weekday Corridor Traffic Volumes (2003)

Goals

The main objective of the I-10 Integrated Corridor Concept of Operations is to facilitate all stakeholders in the region to come together to develop a comprehensive, integrated plan to manage and reduce congestion in the I-10 Corridor. There are seven key goals and objectives for the I-10 Integrated Corridor Management systems:

Goal 1: Achieve maximum throughput on freeways and arterials in the ICMS operational test area;

Goal 2: Improve safety and mobility by reducing incident response and clearance times on freeways and arterials;

Goal 3: Make efficient use of technologies and resources to manage day-to-day demands and optimize the multi-modal network;

Goal 4: Implement new technologies and systems and integrate with existing agency systems to achieve seamless system operations;

Goal 5: Reduce demand by balancing trips among modes and networks, expanding commute alternative programs, and educating travelers about commute options and alternatives;

Goal 6: Enhance traveler information resources, and promote awareness among the public about travel conditions information that is available to them; and

Goal 7: Leverage investments among modes and agencies to effectively mainstream integrated corridor management approaches.

In developing the Concept of Operations and overall approach to congestion mitigation, several strategy focus areas were identified. Within each of the strategy areas, there are specific technology projects, integration activities, system enhancements, and program expansions. Key to the success of each of the strategies is to promote the availability of real-time information to travelers, as well as educate them about commute options.

The schematic in **Figure 3** provides a high-level view of the I-10 ICMS Concept of Operations.

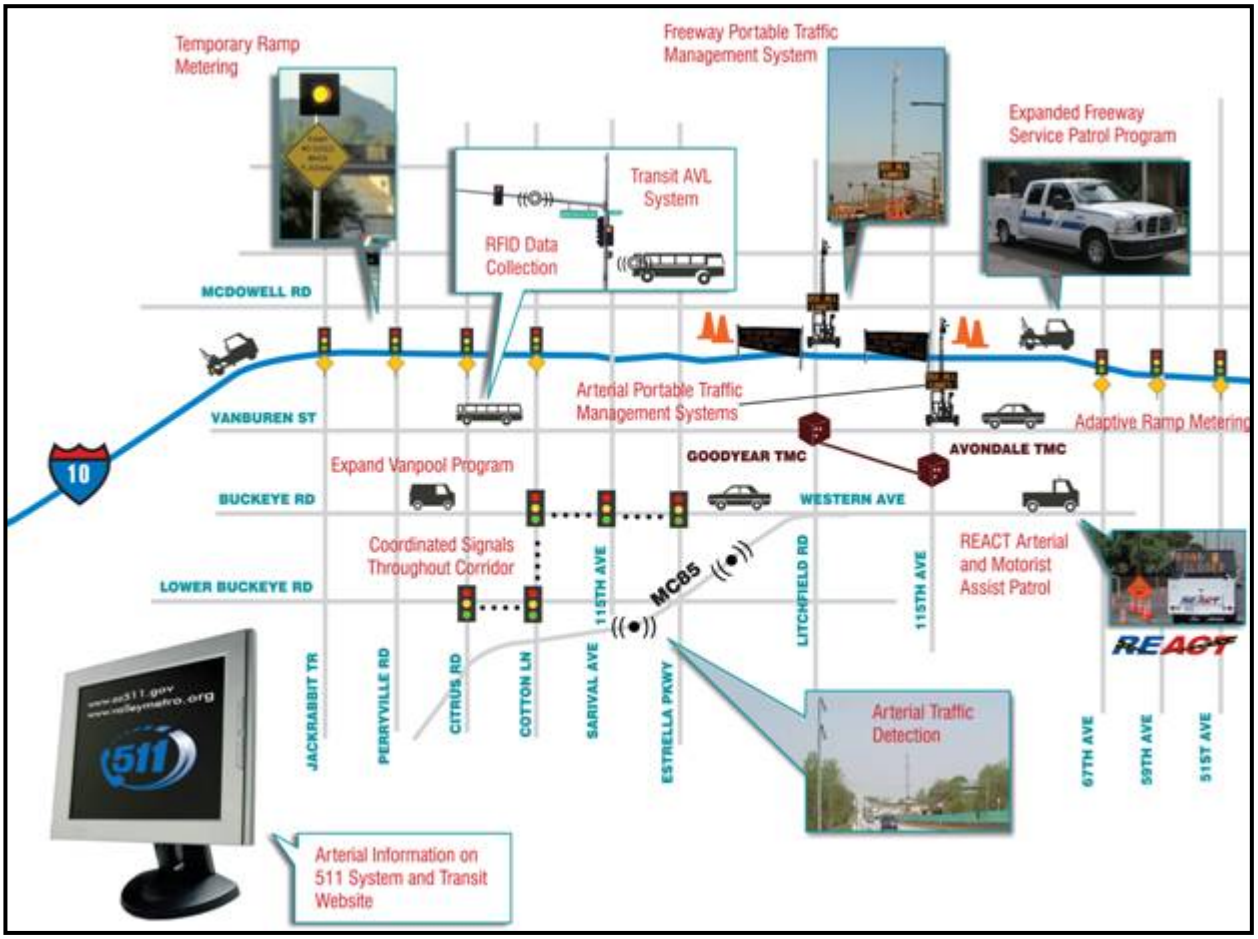

Figure 3 – I-10 ICMS Concept of Operations

This Concept of Operations is an initial step in a comprehensive congestion management strategy for the I-10 Corridor. Included in this document is an inventory of existing and planned systems to support ICMS, a range of potential strategies that could be applied to the various networks within the corridor, and a project-level architecture that shows potential interfaces and interconnects among systems. Also included with this Concept of Operations is a review of potential issues agencies face with implementing ICMS applications (technical, institutional, operational and financial), and operational guidelines and procedures with a focus on near-term activities to enhance communication and coordination among agencies. These procedures look at typical operational scenarios that agencies deal with on a day-to-day basis, and demonstrate how these procedures could be enhanced through ICMS implementation. The final section documents key action items and next steps, including how to best capitalize on projects and programs that are currently funded in the region, as well as priority items that agencies should consider for upcoming funding cycles.

2. INVENTORY

Chapter 2 documents the selected corridor and systems that are in place or planned for the near term to support ICMS strategies for congestion management. Subsequent sections in this inventory identify existing and planned freeway ITS infrastructure, arterial ITS and traffic control infrastructure, transit systems to support ICMS, and regional systems and resources to support ICMS strategies.

2.1 Freeway Infrastructure Inventory

2.1.1 Freeway Lanes and Near-Term Capacity Enhancements

Within the I-10 corridor, freeway infrastructure includes general purpose lanes, HOV lanes, auxiliary lanes, interchanges, and freeway management system infrastructure. ADOT has primary operational jurisdiction for the freeways, entrance/exit ramps, and interchanges.

Within the corridor area, I-10 from I-17 to approximately SR-101 includes (in each direction) an HOV lane, four general purpose lanes, and an auxiliary lane. There are approximately 10 miles of HOV lanes within the corridor. West of SR-101 at approximately 99th Avenue, I-10 reduces down to three GP lanes with no HOV lane; west of Dysart Road, I-10 drops to two GP lanes through the remainder of the corridor area.

ADOT is embarking on a significant I-10 reconstruction and widening project (beginning in 2007) that will increase capacity through those areas of the corridor that are presently at two to three GP lanes. Design work for the I-10 widening project is now underway and will be accomplished in four phases, with Phase 1 construction scheduled to begin in the summer of 2008 and be completed in 2010.

As part of this widening effort, the following lanes will be added:

- One AUX lane, two GP lanes, and one HOV lane from SR-101 to Sarival Avenue. At present, this section of I-10 includes three GP lanes and drops to two GP lanes west of Dysart. This will provide a total of one AUX, four GP and one HOV from Sarival Avenue east to I-17.
- One GP from Verrado Way to Sarival Avenue, which will provide a total of three GP lanes in this section of the corridor.

Figure 4 on the following page provides an overview of the ADOT's I-10 improvements program. A summary of the key construction projects and timeframes are shown in **Table 1**. Beyond 2010, there are plans to add an additional GP lane (from SR 85 to Citrus Road), realign I-10 as part of the future SR-303/I-10 interchange, and implement new traffic interchanges at key points along the corridor.

Table 1 – ADOT I-10 Reconstruction (2007-2010)

I-10 Construction Activity	Timeframe
Bullard Avenue Traffic Interchange	July 2007 – Sept 2008
Widening the Median – Sarival Avenue to Loop 101 (Add One General Purpose Lane and One High Occupancy Vehicle [HOV] lane)	Fall 2007 – Spring 2009
Widening the Median – Verrado to Sarival Avenue	July 2008 – November 2008
Outside Widening – Sarival Avenue to Dysart Road (Add One General Purpose Lane and an Auxiliary Lane)	Fall 2008 – Spring 2010
99th Avenue Improvements – I-10 and MC 85	July 2009

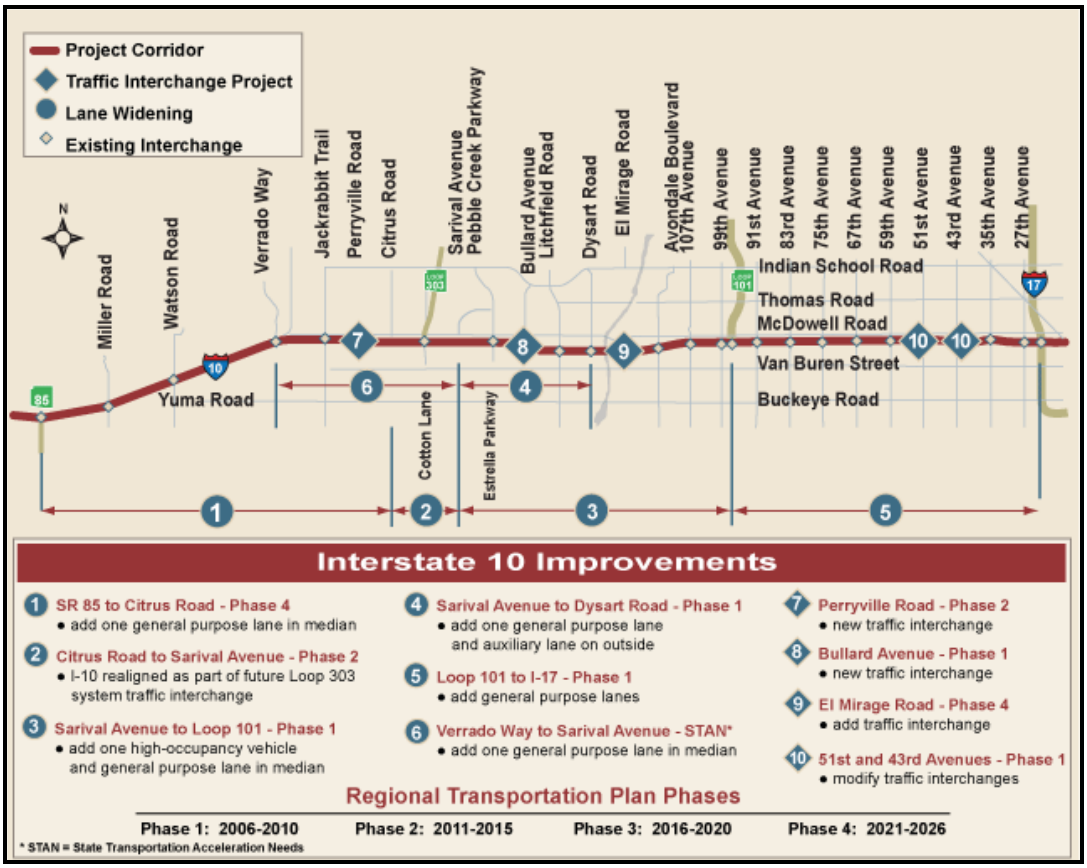

Figure 4 – ADOT I-10 Improvement Program and Timeframe

2.1.2 Freeway Management System Infrastructure

ADOT has been operating an FMS for more than 10 years. Within the I-10 Corridor, the instrumented portions include I-10 west to approximately the SR-101 interchange. This FMS includes:

- Real-time data collection (via loop detection spaced at approximately 1/3 mile);
- CCTV at approximate one-mile spacing;
- Ramp meters;
- Permanent DMS for traveler information; and
- Center-to-field communications.

ADOT monitors and manages the FMS from the Traffic Operations Center (TOC) located at 2302 W. Durango, which is south of the I-10/I-17 interchange. ADOT's TOC is staffed 24/7/365, and provides day-to-day traffic system monitoring and management, event management, traveler information and incident management.

Within the portion of the I-10 ICMS corridor, FMS infrastructure is in place west to 83rd Avenue and additional communications infrastructure is being installed, which will provide fiber along I-10 to the I-10/SR-101 interchange. There is no FMS infrastructure beyond the Loop 101 interchange with the exception of two additional DMS that are being installed west of the SR-101 interchange (99th Avenue, Bullard Avenue). ADOT does not have any additional FMS phases on I-10 planned or programmed within the next five years. **Figure 5** shows ADOT's existing FMS infrastructure in the corridor area.

2.2 Arterial Infrastructure Inventory

2.2.1 Overview of the Arterial Network in the ICMS Corridor

The arterial network in the I-10 ICMS project area includes east-west and north-south arterials in seven jurisdictions: Maricopa County; the Cities of Phoenix, Avondale, Goodyear and Tolleson; Town of Buckeye; ADOT right-of-way. The existing traffic signals in this arterial network are currently operated and maintained by ADOT, MCDOT, and the Cities of Phoenix, Goodyear, Avondale, and Tolleson.

Key east-west arterials in the I-10 ICMS project area traverse multiple jurisdictions, and include:

- McDowell Road;
- Van Buren Street;
- Buckeye Road/Western Avenue/Yuma Road; and
- MC 85.

Kimley-Horn and Associates, Inc.

MARICOPA ASSOCIATION of GOVERNMENTS

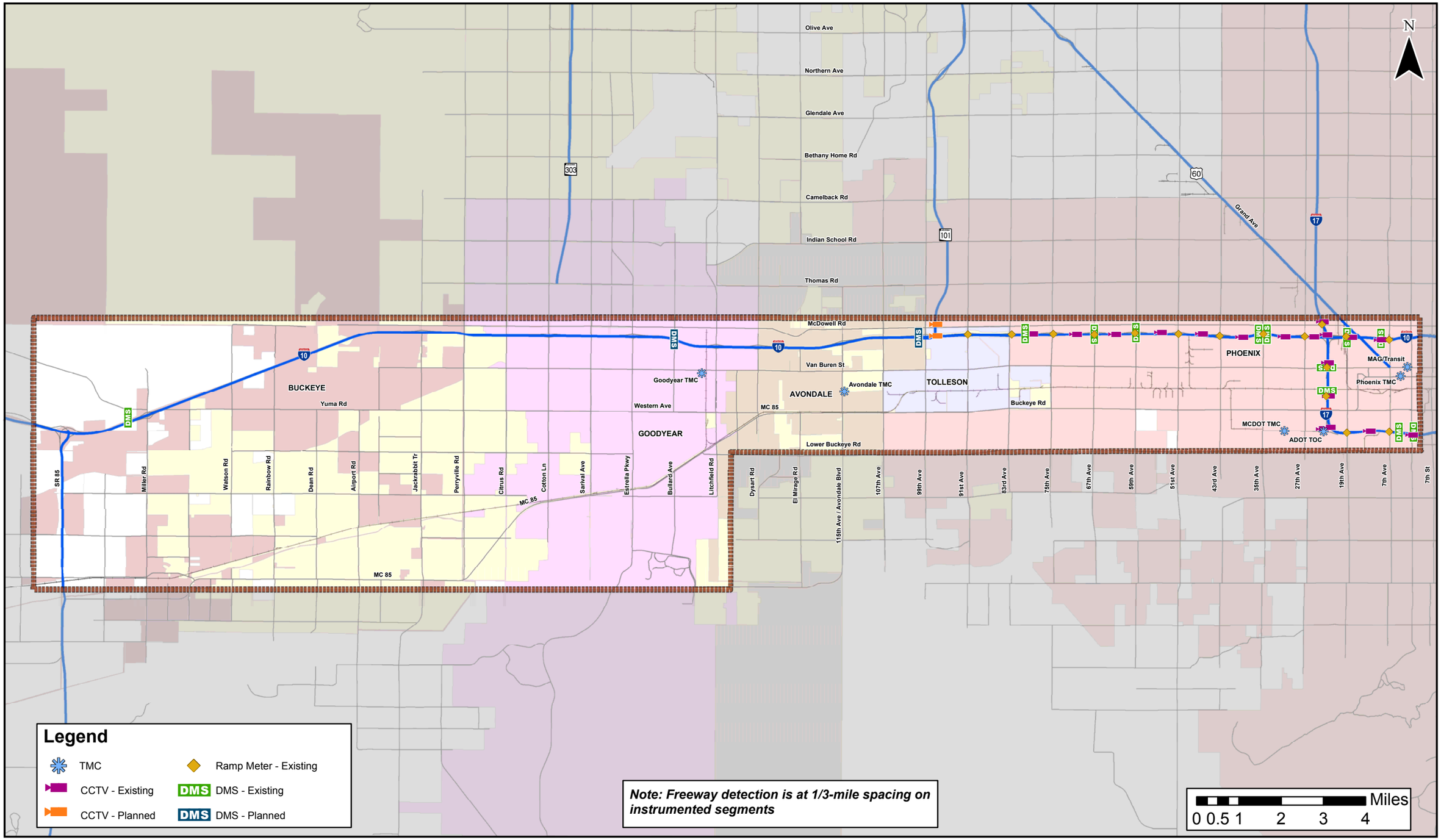

Figure 5 – ADOT FMS Infrastructure

The arterial network in the metropolitan area is set-up generally on a one-mile grid system, with major arterials being located on the section lines, and minor arterials at half-mile spacing. This one-mile grid configuration is conducive to traffic management strategies such as traffic signal synchronization or implementation of diversion routes during incidents or other events. Principal arterials in the metropolitan area are generally four or five lanes at a minimum. There are several arterials within the ICMS corridor that are two-lane. With continued growth in the corridor communities, roadway enhancements will likely occur within the next five to ten years to expand capacity of these arterials.

2.2.2 Arterial Traffic Signal Systems

Intersections in the corridor are operated and maintained by ADOT, MCDOT, the cities of Phoenix, Goodyear, Avondale, and Tolleson, and the Town of Buckeye. These jurisdictions currently have communications to and/or between some of their signalized intersections, but not to all intersections. Communication to or between traffic signal controllers allows for common clock operation resulting in enhanced signal coordination. This communication can be accomplished via a variety of technologies including fiber optic cable, wireless antennas or leased line communications.

Table 2 below summarizes the existing and planned signalized intersections, by jurisdiction, within the I-10 ICMS corridor area. Existing intersection communication media is also identified. **Appendix A** provides a detailed list of existing and planned signalized intersection locations within the I-10 ICMS corridor area. Type of communications, if available is also noted in **Appendix A**.

Table 2 – Summary of Arterial Signal Systems

Agency and Signal System	# of Existing Signalized Intersections	# of Intersections with Communications	Planned Signalized Intersections
Arizona DOT System: i2	20	None in the corridor area	2
City of Avondale System: i2	23	19 (wireless)	5
City of Goodyear System: N/A (future)	14	N/A	7
Maricopa County DOT System: i2	12	7 (leased)	1
City of Phoenix System: TranSuite	143	89 (leased)	3
Town of Buckeye System: N/A	2	N/A	N/A
City of Tolleson System: N/A	2	N/A	N/A

2.2.3 Arterial ITS Infrastructure and Capabilities

Arterial ITS infrastructure within the I-10 ICMS corridor is limited, but includes video detection, CCTV cameras, and communication to traffic signal controllers. This existing infrastructure, however, is not currently deployed at all intersections within the project area. Currently, MCDOT operates eight CCTV cameras (with leased communications) within the I-10 ICMS project area. Avondale operates four CCTV cameras (via wireless communications). The locations of these cameras are listed in **Table 3**. Avondale also has four intersections with video detection cameras which are capable of brining images to their current TMC location.

Table 3 – Arterial CCTV Locations

Agency	Location
Avondale	Dysart Road and MC 85 (Main)
	McDowell Road and Dysart Road
	Van Buren Street and Avondale Blvd.
	Van Buren Street and Dysart Road
MCDOT	MC 85/Buckeye Road and 115th Avenue
	MC 85/Buckeye Road and 83rd Avenue
	MC 85/Buckeye Road and 99th Avenue
	MC 85/Buckeye Road and Cotton Lane
	MC 85/Buckeye Road and El Mirage Road
	MC 85/Buckeye Road and Estrella Parkway
	MC 85/Buckeye Road and Litchfield Road
	McDowell Road and 99th Avenue

The cities of Avondale and Goodyear are embarking on significant ITS deployment and integration activities.

- Avondale currently operates a central signal system which utilizes wireless technology to communicate with approximately 19 intersections. Beyond traffic signals, detection, and four CCTV (in Avondale), there is limited ITS infrastructure in these municipalities, although more is planned in the very near term. Avondale plans to implement a TMC in the next two to three years; currently, the system is managed from the signal shop.
- Goodyear is in the process of procuring a central signal system software, and Capital Improvement Projects to provide a fiber optic backbone and communication to some City of Goodyear intersections are currently underway. Goodyear is planning to implement a TMC within the next two to three years.

The Phoenix TMC is responsible for monitoring and managing the City of Phoenix's ITS infrastructure, including the TranSuite traffic signal system, CCTV, video detection, and arterial DMS. At present, there is limited ITS infrastructure on the City of Phoenix arterials in the ICMS corridor area other than signals. Arterial DMS, VID and CCTV are located in the downtown area; Phoenix routinely coordinates with ADOT during special events in the

downtown area to provide traffic information to motorists using both Phoenix and ADOT infrastructure.

MCDOT is responsible for the MC 85 (Buckeye Road) corridor within the project area. MCDOT currently operates a TMC from which operators can communicate with and monitor the majority of the signalized intersections under their jurisdiction. From the TMC, MCDOT also monitors their CCTV images, seven of which are located along MC 85. MC 85 is a critical arterial in the I-10 integrated corridor strategies. MCDOT will soon be implementing roadway sensors on MC 85 through the ITIP program. Although MCDOT does not currently operate arterial DMS in their jurisdiction, the MCDOT TMC does have the capability to post messages on other jurisdictions' signs when MCDOT is providing back-up/after-hours support to the owning jurisdiction. MCDOT has agreed to serve as an after-hours monitoring facility for the ICMS project area if funding is received.

Figure 6 identifies key arterial ITS infrastructure in the I-10 ICMS area.

2.3 Public Transportation Inventory

2.3.1 Transit Services and Routes

Valley Metro and City of Phoenix Transit provide fixed-route and demand-response services along key arterials throughout the I-10 ICMS area. Express and Rapid routes also utilize arterials as well as the I-10 freeway corridor. Below is a summary of the existing bus services within the operation testing area. Express and local routes are shown in **Figure 7**.

- **Local Bus Service:** Valley Metro operates three east-west local routes (#17-McDowell, #3-Van Buren and #13-Buckeye) within the corridor area that have total ridership of 17,900 daily boardings.
- **Express Bus Service:** Valley Metro offers one east-west Express Route in the corridor area with a total of 107 daily boardings.
- **RAPID Bus Service:** Phoenix Public Transit/Valley Metro operates one east-west RAPID Route in the corridor area with a total with a total of 622 daily boardings. The I-10 West Valley RAPID Route operates exclusively within the candidate corridor area.

Currently, there is not express bus service to the West Valley community of Buckeye. Valley Metro plans to implement the Papago Freeway Connector express service in July 2008, which will include four inbound and four outbound trips each weekday. The Town of Buckeye plans to partner with private sector on a shared-use temporary park and-ride location, which will be implemented with the deployment of the express bus service to Buckeye. The second extension of bus service is Route 17A on McDowell Road from 79th Avenue west, hourly service Monday thru Friday beginning January 2008 and funded by the City of Avondale.

Kimley-Horn and Associates, Inc.

MARICOPA ASSOCIATION of GOVERNMENTS

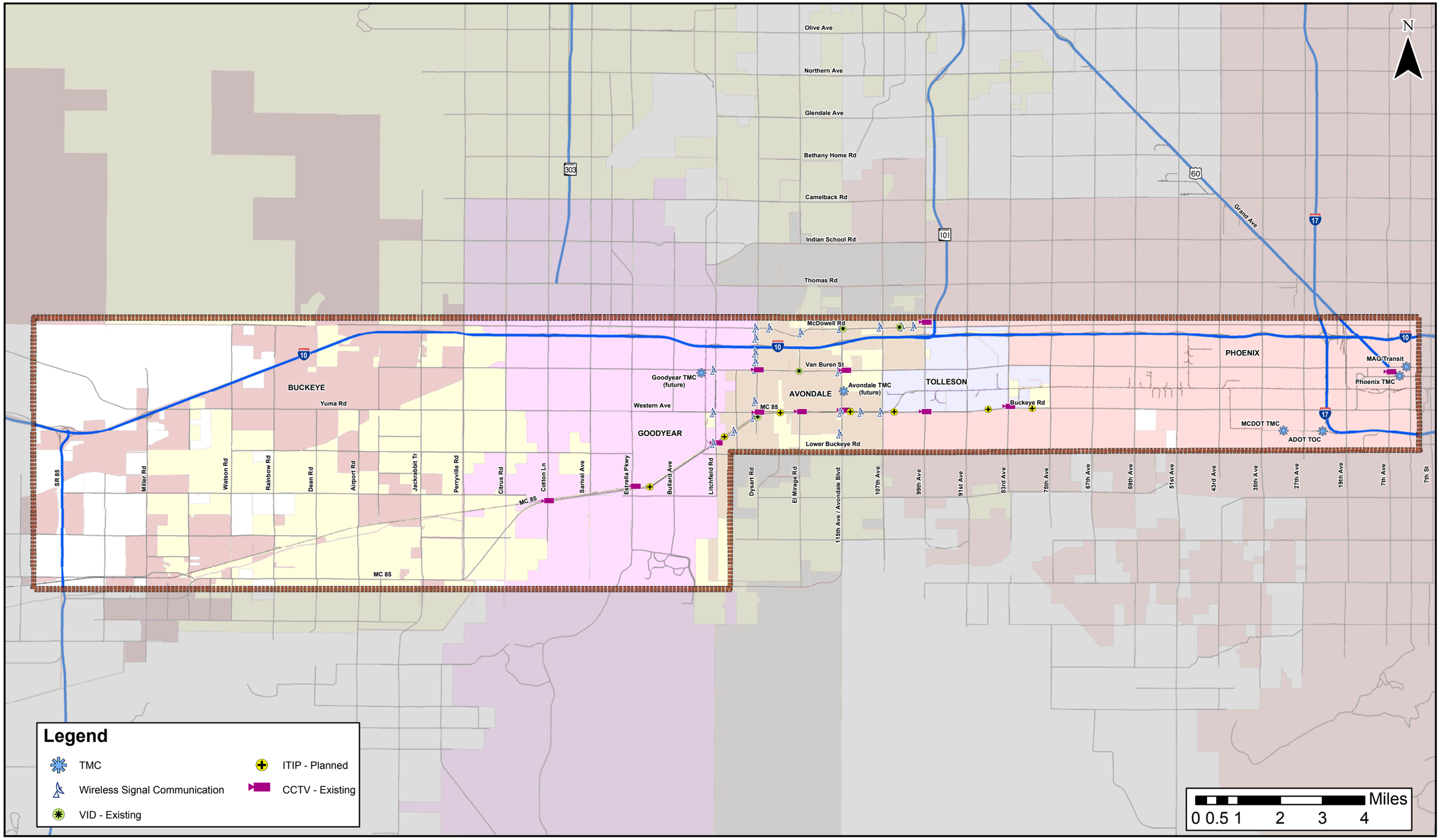

Figure 6 – Existing and Planned Arterial ITS Infrastructure

2.3.2 Park and Ride Locations

Within the defined corridor area, there are four park-and-ride sites. These are also shown on **Figure 7**:

- Avondale Plaza: Express Bus #560;
- Donnie Hale Park: Local Bus #131;
- Tolleson City Offices: Express Bus #560 and Local Bus #131; and
- 79th Avenue and I-10 Park-and-Ride (Transit Center): Local Bus #17, Express Bus #560 and RAPID I-10 West.

2.3.3 Vanpool and Rideshare Programs

Vanpool and rideshare programs are very active in the metropolitan area, and in fact, vanpools are at capacity. Valley Metro currently administers a fleet of over 300 vans for its Vanpool Program (these vanpools operate valleywide). Vans are provided to qualifying groups of 6-15 commuters with three volunteering drivers for each group. Passengers share the cost of operating the van by paying a monthly fare which covers all costs including gas, insurance, and van maintenance.

In addition, Valley Metro sponsors ShareTheRide.com to provide the general public an easy and free way to find others in the Valley who are interested in sharing the ride to work in a carpool or vanpool.

2.3.4 Transit ITS Infrastructure

Transit in the region has made substantial investments over the last several years to upgrade and expand the systems to support real-time system and vehicle monitoring, communications, dispatch and operations center capabilities, and transit traveler information.

- The Transit OCC serves as the key dispatch and operations hub for transit operations valleywide. Operators at the OCC view ADOT's CCTV images along freeway corridors to monitor traffic as well as freeway traffic conditions near the park-and-rides.
- 99% of all regional fixed route vehicles (approximately 1,000 buses) are equipped with GPS AVL systems that provide real-time location and schedule adherence information to the Operations and Control Center.
- AVL is used to monitor transit schedule adherence (through a GIS display), and this transit data is used to provide next-bus arrival times at transit center kiosks and sign displays located at the Park and Ride on I-10/83rd Avenue, and the downtown center.
- Buses are also equipped with on-board digital video recorders, audible bus stop announcements, automated passenger counters and fare boxes. Passenger counter data is utilized to track boardings—ridership is a key performance measure for transit operations.

Kimley-Horn and Associates, Inc.

MARICOPA ASSOCIATION of GOVERNMENTS

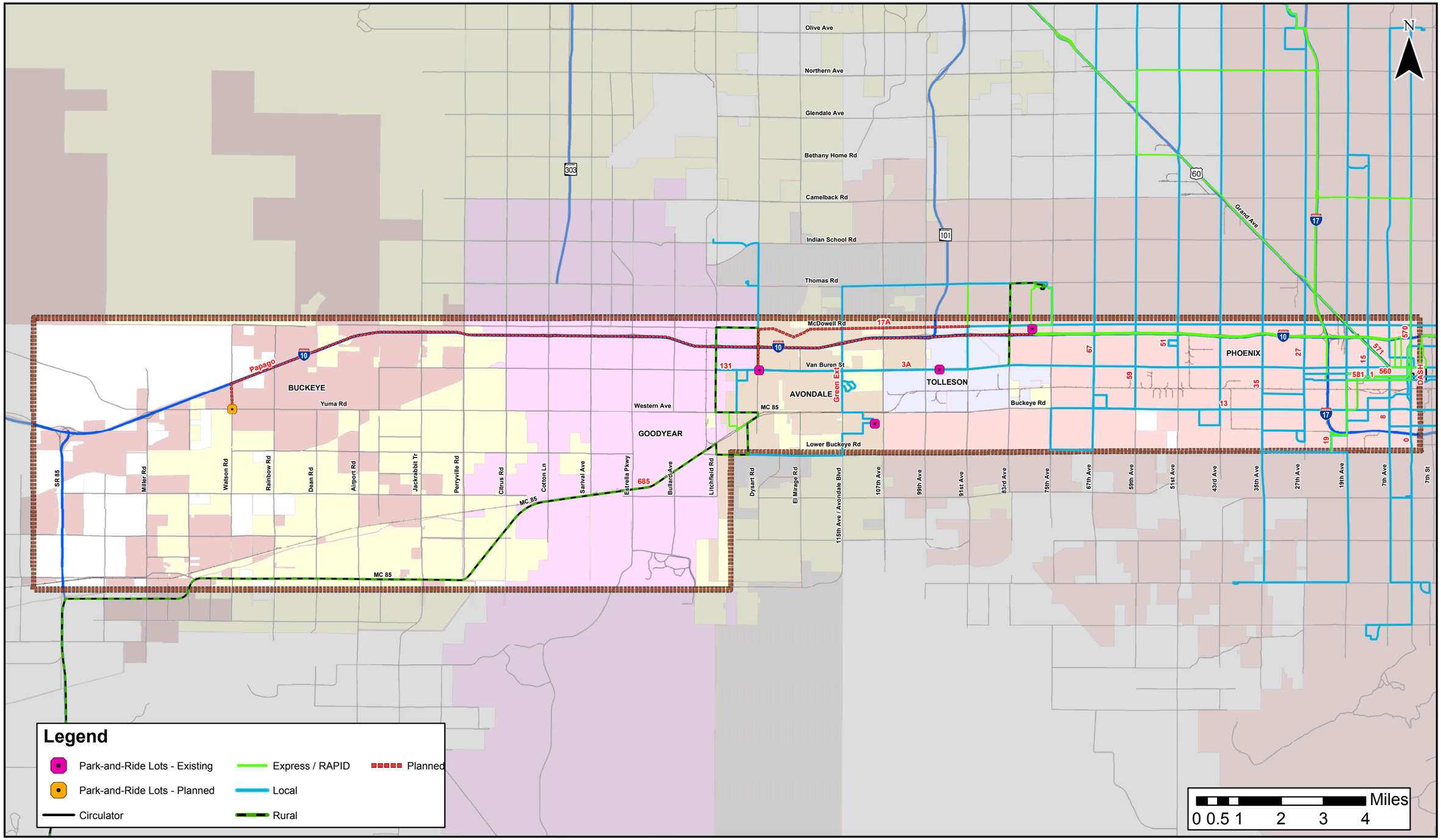

Figure 7 – Transit Routes and Park-and-Ride Locations

2.3.5 Light Rail Transit Planning

Valley Metro Rail has identified the I-10 corridor (west to the 79th Avenue Park and Ride) as a consideration for a future extension of the LRT. An alternatives analysis is underway and is scheduled for completion in 2008. Although the median is currently the primary alternative being studied, the study area goes north to Thomas Road and south to Buckeye Road, so there could be additional alternatives looked at as part of the Valley Metro Rail LRT extension study.

A previous I-10 environmental document preserved the median for future mass transit use, and it is likely that if LRT is extended along I-10, it will use the median. There could also be substantial benefit to coordinating LRT planning with ADOT's study and design concept report for improvements along that segment of I-10 (I-17 – Loop 101).

2.4 Regional Systems to Support Integrated Corridor Management

2.4.1 Transportation Management and Operations Centers

State, county, and municipal traffic management centers, and a regional transit operations center provide the backbone for the region's freeway and arterial management systems, incident management systems, as well as the coordinated information sharing among key ICMS partners. **Table 4** summarizes these foundation operations and dispatch center resources within the corridor. The Cities of Avondale and Goodyear are planning TMCs for their jurisdictions within the next two to three years. The City of Avondale has an existing TMC which will be expanded and potentially relocated from its existing location in the signal shop to the Avondale City Hall building.

Table 4 – Existing Transportation Operations and Dispatch Centers

Center	Key Functions and Roles
ADOT Traffic Operations Center 	▪ 24/7/365 Operations Center for ADOT Freeway Management System, also serves as Statewide Traffic Operations Center ▪ Monitors and controls CCTV, DMS, ramp meters for FMS ▪ Link from Arizona DPS CAD system and Phoenix Fire CAD to ADOT TOC ▪ Communication links to MCDOT TMC and City of Phoenix ▪ Central hub for ADOT's Highway Closure and Restriction System (HCRS) ▪ 511 traveler information web and phone ▪ Statewide AMBER Alert coordination with DMS and 511 ▪ Dispatch for ADOT ALERT response team ▪ Coordination with City of Phoenix, MCDOT, City of Glendale for special event management, including downtown, Phoenix International Raceway ▪ Media collocated at TOC (Clear Channel Communications)

Table 4 – Transportation Operations and Dispatch Centers (continued)

Center	Key Functions and Roles
Maricopa County DOT Transportation Management Center 	▪ State-of-art video wall (2X7 50" cubes) and processor with remote viewing capabilities ▪ Dispatch for REACT arterial emergency traffic management response team ▪ Signal system (i2) operations ▪ Regional monitoring of CCTV and DMS on freeways and arterials ▪ Phoenix Fire CAD for arterial information ▪ Hub for County RCRS, MCDOT enters information into ADOT's HCRS on behalf of local jurisdictions ▪ PIR special event traffic management ▪ Traffic.Com public agency exclusive feeds ▪ Flood Management system (sensors at two sites) ▪ Weather information feed from NOAA ▪ Palo Verde Nuclear Reactor and Plant Traffic Management Monitoring ▪ Remote Access to all functionality ▪ Network Monitoring
City of Phoenix Traffic Operations Center 	▪ Central operations center for city's TranSuite signal system ▪ Monitors arterial CCTV ▪ Arterial DMS control ▪ Special event management operations, including downtown event management system ▪ Coordination with ADOT for signals at freeway interchanges ▪ Links to ADOT TOC, MCDOT TMC and Transit OCC
City of Phoenix Transit Operations Control Center (OCC) 	▪ Transit OCC recently enhanced and upgraded with new transit Vehicle Management System ▪ Operates 7 days per week, 19 hours per day ▪ Directs, communicates and monitors the performance of the scheduled transit services, including local, Express and Bus Rapid Transit ▪ Voice and data radio communications with each transit vehicle as well as service and supervisory vehicles ▪ Transit VMS includes AVL system which is displayed and monitored at the OCC to track vehicle schedule adherence ▪ Transit OCC can view ADOT freeway CCTV cameras to monitor I-10 freeway conditions in real-time ▪ Hub for transit information, including in-vehicle, web, kiosks and display signs at transit centers and park and rides

2.4.2 Incident Management and Incident Response

Effective management, coordination and response is a critical component to safe and efficient incident clearance, maintaining throughput on both freeways and arterials, and restoring the network back to operational capacity. Agencies in the MAG region have made important investments in incident management systems and programs to aid emergency responders as well as support traffic managers during incident response and clearance. **Table 5** summarizes these programs and key initiatives.

Table 5 – Incident Management/Response Teams

Lead Agency and Program	Program Description
Arizona DOT Arizona Local Emergency Response Team (ALERT)	ADOT's ALERT program provides emergency traffic control on freeways for incidents or closures. ALERT vehicles operate in the Phoenix metro area, and are dispatched in coordination with the TOC and District 1 Maintenance.
Arizona DPS Freeway Service Patrol (FSP)	Arizona DPS operates the Freeway Service Patrol, which is a roving patrol that assists stranded motorists, can help with changing tires, making minor repairs, calling a tow truck, helping move a disabled vehicle to the shoulder, or removing debris from the roadway. The FSP also assists officers at collision scenes or during closures.
Maricopa County DOT Regional Emergency Action Coordinating Team (REACT)	REACT is an arterial traffic incident response unit that provides emergency traffic management for incidents, detours, or other hazards impacting major arterials. Trucks are equipped with programmable DMS and other safety equipment. REACT is dispatched from the MCDOT TMC, but public safety often calls REACT directly when there is a request for response services.

Another important component of incident management to support ICMS is the automated information exchanges established between the ADOT and MCDOT TMCs with DPS and Phoenix Fire. Operators at the ADOT TOC have access to DPS CAD data that has been filtered to provide only that incident information that impacts freeways or highways. This allows ADOT to be able to enter and update freeway incident data within the Highway Condition Reporting System (HCRS), which is then fed to 511, www.az511.gov, and sent via FTP to private partners that access the ADOT data. A data feed established between MCDOT and Phoenix Fire provides an automatic feed of Phoenix Fire CAD data about incidents that impact arterials. These two interfaces have greatly increased the information sharing between public safety and transportation management in the region.

2.4.3 Traveler Information Systems

Traveler information is available to travelers through several channels, including phone, web, broadcast media, and mobile wireless devices.

Arizona's 511 phone service provides current information about road/travel conditions, incidents, and links to transit, airports, and tourism. ADOT's 511 website, (www.az511.gov), provides access to freeway CCTV images, maps with color-coded travel speed levels, and planned closures/restrictions shown with icons as well as text descriptions. The www.az511.gov is going through a major enhancement in the summer of 2007, which

will include information for PDAs (speed maps and CCTV images), intermodal information, and a new "Metro Phoenix" section.

Transit traveler information is available via phone (customer service center, including a link to the transit customer service center from Arizona's 511 system) as well as web-based trip planning and schedule information from www.valleymetro.org. This supports enhanced information and trip planning information for customers to be able to plan routes and trips, which could include multiple arterials through the corridor area, as well as Rapid and Express routes that utilize the freeway. Park and ride and ridesharing information is also available via the web site and customer service center. On-board visual and audible "next stop" information is available on most Local, Express and Rapid bus vehicles.

MAG and ADOT have partnered on a project to make real-time freeway speed maps available via a **mobile traveler information portal**. Users will be able to access color-coded speeds (red, yellow, green) for segments of freeway that are instrumented with FMS infrastructure. Corridor travel times will also be available. The project is currently in the pilot deployment stage, with a formal launch expected in summer 2007.

Local media continue to play a strong role for traveler information in the metropolitan area. Commercial radio and television broadcast incident information for freeways and arterials, and some stations also provide travel time information. Several local television news stations have agreements in place with ADOT to be able to access freeway CCTV feeds. There are also partnerships between local media and private sector information service providers to supplement TV traffic reports with graphics, maps, travel times and web-based information from the TV web sites.

2.4.4 Regional Connectivity and Center-to-Center Communications

For the past several years, agencies in the region have been focusing on establishing connectivity among transportation and public safety management entities. This connectivity enables automated information exchanges and a higher level of collaboration and communications for day-to-day system management, as well as for incident management and response. Below are two key initiatives that will support interagency communications within the ICMS program:

- **Regional Community Network** – The Regional Community Network (RCN) is developing and implementing the physical communications infrastructure that will interconnect the various transportation and public safety centers across jurisdictions. Within the I-10 ICMS corridor area, several agencies are already connected: Arizona DOT, Maricopa County DOT, City of Phoenix, MAG and City of Phoenix Transit. The Cities of Avondale and Goodyear are scheduled for 2009, or as funding becomes available to implement those connections. The RCN will consist of the conduit, fiber optic cable, routers, switches, and other communications hardware necessary to provide a path between network nodes.
- **Center-to-Center System** – The AZTech™ Transportation and Public Safety Center-to-Center Needs Assessment and Concept of Operations project developed the system configuration, concept of operations, and functional requirements for the system that will make use of the RCN infrastructure, as well as other communications means such as leased lines or the Internet. The C2C System does not provide any physical links

between centers or agencies, but instead establishes the protocols that the various software platforms within each of the centers will use to exchange information over the RCN or other networks. The C2C system will support inter-agency DMS operations and traffic management system operations on a permissive basis.

2.5 Inventory of Operational Procedures to Support ICMS in the I-10 Corridor

To date, there is a limited number of formal operational procedures or policies in place for traffic management. Agencies recognize that as system and network operations become increasingly interjurisdictional, there is a stronger need for more formal operational procedures to be developed and agreed to by partners. While individual agencies may have operational procedures and guidelines in place for their systems, there is a need to continue to establish guidelines, procedures and processes to address multi-agency operational approaches.

2.5.1 Operational Procedures for Traffic Management/Operations

In 2004, MAG led the development of a set of "Guidelines for Transportation Operations" in conjunction with the *Regional Concept of Transportation Operations*. These guidelines include completed chapters for Corridor Management and Freeway and Arterial Coordination, and it was envisioned that additional chapters would be developed for Interjurisdictional Signal Coordination, Incident Management, Information Exchange and Regional Maintenance Practices. Each chapter contains:

- Performance measures and goals from the RCTO that apply to that chapter;
- Operational guidelines for device monitoring and operations; and
- Additional operational parameters.

AZTech™ has developed center-to-center, DMS and CCTV operations guidelines. These were developed by the AZTech™ Operations Working Group, and provide a framework for agencies to use to implement more formal operational policies at their respective agencies.

ADOT has an operations manual for TOC operators, which includes DMS and CCTV operations, ramp meter operations, HCRS entries and other functions. The manual is updated as needed and is provided to each operator. ADOT also includes procedures and policies for CCTV usage as part of its agreements with private sector media for CCTV access.

For the Bell Road ITS program, MCDOT and the cities of Surprise and Peoria developed a corridor operations plan (*Bell Road ITS Operations Plan*), which outlines operational procedures, permission levels to access other agencies' equipment, and a recommended library of DMS messages. As part of the I-10 ICMS Concept of Operations development, stakeholders agreed that a similar Operations Plan would be needed to support multi-jurisdictional network management and operations strategies within the corridor.

2.5.2 Operational Procedures for Incident Management

There are more formal policies and procedures in place for incident management, particularly among public safety responders (Phoenix Fire, DPS, local police). The Phoenix Regional Standard Operating Procedures (Volume Two) are utilized by fire departments

valleywide, and serve as the framework for regional emergency management coordination. Among the document policies and procedures within this regional document are:

- Command procedures;
- Fire operations;
- Medical operations;
- Technical operations;
- Communication Deployment and Response; and
- Special Considerations.

The procedures clearly document the communication paths and messages to be used when communicating between agencies. As part of these standard operating procedures, the fire departments have mutual aid agreements that document additional specific procedures when responding to fires or incidents in each other's jurisdiction.

ADOT, MCDOT, and the Arizona Department of Public Safety entered into an agreement to improve public safety and incident management through the use of automatic vehicle location (AVL) on response vehicles. Together, the agencies will have 24 emergency response vehicles equipped with AVL transmitters. The State provided $500,000 in federal funds for the program, and each agency installed AVL transmitters in their vehicles. The County and the State share responsibilities for operating the CAD system and terminal. The dispatch operators do not have access to confidential information from the emergency operations communications network. This agreement was signed on April 2, 2006.

Arizona adopted a quick clearance law which states that drivers involved in minor vehicle accidents on a divided highway are to safely move the vehicle to a shoulder (if able) and if there are no physical injuries.

2.5.3 Special Event Management Plans

Agencies have collaborated on comprehensive traffic management plans for pre-event coordination, event day traffic and incident management, ingress/egress monitoring and management, and public information. The City of Phoenix has procedures in place for its Downtown Event Management System. Particularly relevant to the I-10 ICMS effort is the PIR Event Management Plan. This Plan has been evolving over the last several years, and is reviewed and updated following each major event at PIR. The PIR plan, led by MCDOT and in coordination with several other partner agencies, includes procedures for the following:

- Program Planning;
- Event Operations Planning;
- Implementation Activities;
- Day-of-Event Activities; and
- Post Event Activities.

The PIR Event Management Plan not only provides operational and procedural requirements, but also outlines performance objectives and measures of effectiveness, so that partners can monitor, event-by-event, how the plan is working. The Traffic Management Plan section provides detailed guidance on inbound and outbound traffic management, traveler information, and incident/emergency operations (if needed). Message sets for permanent and portable DMS (from multiple agencies) and locations of these DMS are also included. It details equipment, resources, staff needs and roles and responsibilities for the various partners (ADOT, DPS, County, Cities, PIR, private sector).

3. STRATEGIES AND PERFORMANCE MEASURES

Strategies have been developed to address each of the goals and objectives for the I-10 Integrated Corridor, and these are outlined in the following sections. In many cases, strategies build on current infrastructure and investments already in place among partner agencies, including ADOT, Valley Metro, MCDOT, and cities in the corridor. Other strategies are focused on enhancing and expanding technology, operational capabilities, and system integration to achieve real-time and responsive systemwide operations.

The strategies in the following sections outline a very robust strategy set that took into account the potential for federal funding to support the development and implementation of an Integrated Corridor Management System in the I-10 corridor. These strategies will be refined into a "Plan B" scenario that considers limited or no federal funding, and will focus on priority strategies that stakeholders feel are important to move forward with in the Region. Chapter 7 of this ICMS Concept of Operations identifies those priority strategies.

Section 3.2 of this technical memorandum presents potential performance measures that are mapped back to the ICMS goals and objectives.

3.1 ICMS Strategies

The I-10 ICMS will require coordination among multiple jurisdictions and networks to achieve the desired goal—which is ultimately to reduce congestion in the corridor—as well as the specific objectives established for this program. In developing the Concept of Operations and overall approach to congestion mitigation, several strategy focus areas were identified. Within each of the strategy areas, there are specific technology projects, integration activities, system enhancements, and program expansions. In some cases, there will be new technologies and systems applied to the networks to enhance operations or provide more robust real-time network conditions data. In other cases, existing programs and systems will be expanded to provide even more options to travelers and additional tools to agency traffic managers. Key to the success of each of the strategies is to promote the availability of real-time information to travelers, as well as educate them about commute options.

3.1.1 Freeway Management Strategies

The freeway strategies identified for the ICMS Concept of Operations focus on enhancing freeway monitoring through additional data collection systems (permanent and portable), expanding motorist information systems to provide up-to-date conditions information to travelers, implementing adaptive ramp metering capability, and enhancing incident management through a combination of strategies.

Table 6 – Freeway: Enhance Freeway Monitoring

Project	Description of Project	Owning Jurisdiction	Devices/Study
Portable ITS Traffic Management Systems	Procure portable CCTV/Smart Zone monitoring equipment. Includes a trailer mounted DMS and mast equipped with a PTZ video camera, sensors, and wireless communications.	ADOT	4 Portable Traffic Management Systems
Permanent DMS	Installation a permanent DMS west of SR 85/I-10 to provide information to eastbound travelers.	ADOT	1 Permanent DMS
Temporary web cameras for traffic monitoring	Deploy temporary web cameras at SR 85/I-10 interchange, Watson Road, Jackrabbit Trail, Citrus Road, Bullard Avenue, 115th Avenue, 2 extra cameras for next phases of construction.	ADOT	8 Web Cameras on Temporary Structures
Freeway Data Collection	Identify low-cost, non-intrusive options for freeway speed data collection on non-instrumented FMS segments.	ADOT	
Transit AVL Data	Install GPS/DGPS equipment into transit vehicles traveling RAPID I-10 West route continuously in morning and evening peak periods.	Valley Metro	5 to 6 transit vehicles

Table 7 – Freeway: Workzone Management and Control

Project	Description of Project	Owning Jurisdiction	Devices/Study
Temporary Ramp Metering	Deploy portable traffic signals that can be synchronized to offset ramp merges onto the freeway.	ADOT	10 Portable Traffic Signals
Ramp Detection	Remote Traffic Microwave Sensors deployed for freeway on-ramps that currently do not have ramp metering capabilities. Includes sensor, transceiver, cabinet, electrical service, and pole.	ADOT	10 Remote Traffic Microwave Sensors
Adaptive Ramp Metering	Upgrade existing I-10 ramp metering controllers to adaptive technology. Cost is per upgrade of the controller and includes the installation of ramp video detection and installation of the software which will be locally funded.	ADOT	10 Ramp Metering Controller Upgrades

Table 8 – Freeway: Incident Management

Project	Description of Project	Owning Jurisdiction	Devices/Study
Alternate route plan	Develop an alternate route plan for approximately 20 miles of I-10 through the west valley areas to detour traffic away from construction zones and in the event that a major incident/accident requires a freeway closure.	ADOT	Alternative route plan for I-10
Expand Freeway Service Patrol	Expand Freeway Service Patrol.	DPS	2 to 3 additional FSP vehicles

3.1.2 Arterial Management Strategies

Construction activities on the I-10 Freeway will inevitably cause increased congestion on the surrounding arterials. Planned detours for full freeway closures will involve the arterials, but additionally many motorists will avoid the freeway during construction. This section focuses on strategies for addressing the congestion that is anticipated to occur on the arterials surrounding the I-10 construction zone. The limits of the impacted arterials were assumed to be Cotton Lane to the west, McDowell Road to the north, 67th Avenue to the east, and MC 85 (Buckeye Road) to the south.

Table 9 – Arterial: Enhance Arterial Monitoring and Control

Project	Description of Project	Jurisdiction	Elements
Signal Interconnect	Establish communication with each arterial intersection on parallel arterials to allow for common clock operation resulting in enhanced signal coordination. This can be accomplished via fiber (which will require conduit and pull boxes), leased lines or wireless antennas. All options will require equipment to be installed within the traffic signal controller cabinet.	Avondale	Wireless Radio, Cabinet equipment
		Goodyear	Leased Lines, Cabinet equipment
		MCDOT	Leased Lines, Cabinet equipment
		ADOT	Leased Lines, Cabinet equipment
		PHX	Wireless Radio, Cabinet equipment
Implement CCTV Cameras	CCTV cameras installed at key intersections would allow for monitoring of the corridors.	All	CCTV Cameras
Enhance/ Upgrade Central Signal System	Upgrades and enhancements to existing central signal systems will be required to accommodate the additional CCTV and intersections.	Goodyear, Avondale, MCDOT	Software, Workstation(s), Communication to Field Devices from workstation
ICM Workstations	Workstations for the control/monitoring of ICM arterials.	Goodyear, Avondale, MCDOT	Workstation
Arterial Detection	MCDOT plans to deploy detection sensors at 7 locations on MC 85. This detection, along with additional installation locations will provide count data along arterials. Look at additional options for arterial data collection	MCDOT, Avondale, Goodyear, Phoenix	ITIP sensors, Software Development for MCDOT TMC

Table 10 – Arterial: Implement Interagency Corridor Operations

Project	Description of Project	Jurisdiction	Elements
Center to Center Communications	Leased Lines between ADOT, MCDOT, Goodyear, Avondale	All	Multiple Leased Lines
Traffic Signal Coordination	Across multiple jurisdictions, coordinated traffic signal timing strategies optimize the movement of platoons of traffic through signalized areas by more utilizing the existing roadway capacity.	All	Synchro model, volume projections for 90 intersections, Peak period timing plans

Table 10 – Arterial: Implement Interagency Corridor Operations (continued)

Project	Description of Project	Jurisdiction	Elements
Shared control	Upon establishment of C2C communications, multiple jurisdictions will be able to monitor other jurisdictions intersections either after hours or in a back-up capacity.	All	After-hours/Back-up monitoring by MCDOT TMC
Operations Plan	Interagency operations plan for the agencies to coordinate systems	All	Operations Plan

Table 11 – Arterial: Improve Arterial Incident Capabilities Response Time

Project	Description of Project	Jurisdiction	Elements
Arterial Motorist Assist	Provide motorist assist services, similar to Freeway Service Patrol, on arterials.	MCDOT	2 Arterial motorist assist vehicles and 2 responders
Additional REACT Response Units	Expansion of current REACT incident response service to include units designated for the area surrounding the I-10 construction.	MCDOT	2 incident response vehicles and 2 responders
Police/Sheriff Video Feed	Police and Sheriff access to CCTV video feeds could allow for advanced incident detection.	City PD and Sheriff, TMCs	System Integration with existing platforms

Table 12 – Arterial: Provide Enroute Traveler Information on Arterials

Project	Description of Project	Jurisdiction	Elements
Portable DMS	Portable DMS can be used to display information (detours, closures, merges) to motorists. Portable options include Portable ITS Platforms which can be communicated with wirelessly and also include CCTV. Portable platforms could be relocated during various phases of construction.	All	10 portable ITS platforms

3.1.3 Public Transportation Strategies

Transit is a key strategy for the ICMS congestion mitigation operational test. By expanding transit services to provide West Valley commuters with a viable and convenient option to making daily trips inbound for their work commutes, this will have a significant impact on levels of vehicular traffic in the corridor. Furthermore, one of the important fundamental objectives of the I-10 ICMS is to leverage investments of the different operational modes. Sharing transit AVL data with city and county traffic management centers will provide arterial and freeway management agencies with another tool for monitoring freeway and arterial traffic conditions in real-time. This section describes some of the Public Transportation strategies that are envisioned for implementation in the I-10 Corridor.

Table 13 – Transit: All Strategies

Strategy	Project	Description of Project	Owning Jurisdiction	Devices/Study
Transit AVL – Probe Surveillance of Traffic Information	Potential upgrade/replacement of the software at both Transit OCC and TMCs	Develop an algorithm to translate the probe data into the representation of the arterial traffic condition (including "congestion alarm"), for use by City traffic managers	Valley Metro/Phoenix Transit, MCDOT, City of Phoenix	Upgrade in 20 buses and 3 TMCs
Transit Travel Information	Developing a real-time transit (bus) information website	Enable real-time transit arrival information via web or wireless device access	Valley Metro/Phoenix Transit	One integrated internet portal of real-time transit information
	Integrating transit and traffic information into current Arizona 511 system	Implement transit IVR in the 511 system	Valley Metro/Phoenix Transit, ADOT	One enhanced transit information component in 511 system
Expansion of Rideshare Programs	Vanpool Program	Procure 33 additional vanpool vans for the I-10 corridor. The program is financially self-sustaining as the user fee covers costs of insurance, maintenance and fuel of the vehicles.	Valley Metro	33 vanpool vans (each holding eight or nine passengers)
Enhancements in Transit Services	Expanding existing bus routes	▪ Route 17 (McDowell): Expand the bus service from 91st Ave. to the park-and-ride located at Avondale Plaza ▪ Route 13 (Buckeye): Expand the bus service from 75th Ave. to the park-and-ride located at Avondale Plaza	Valley Metro/Phoenix Transit	
	Route services increase and New route additions	▪ Existing Route 3A (Double Frequency) ▪ New Route 17A (Double Frequency) ▪ New Papago Freeway Connector, connecting Phoenix and Buckeye (Double Frequency) + one temporary Park and Ride Lot (Public Private Partnership with Lowes and Wal-Mart Shopping Center)	Valley Metro/Phoenix Transit	Bus services O&M One additional park and ride lot

3.1.4 Traveler Information Strategies

Notifying travelers of restrictions, closures, and capacity reductions along I-10 is a critical component of the overall ICMS. Information needs to be disseminated to travelers before they embark on their trip, as well as provide them with up-to-date road and travel conditions on freeways and arterials in the impact area. Information needs to alert travelers about construction activity and restrictions, alternate arterial routes, and incident advisories. The focus of these strategies is on expanding and enhancing current traveler information systems, as well as implementing additional strategies that will make information more comprehensive and accessible to travelers.

Key traveler information strategies proposed for the ICMS concepts include:

- Enhance 511 and www.az511.gov to provide expanded freeway and arterial information;
- Implement and promote innovative traveler information tools to provide real-time travel conditions information;
- Expand availability of traveler information within the I-10 operational test corridor to include freeway and arterial conditions information; and
- Enhance media coverage and media traffic advisory information within the I-10 operational test corridor.

Many of the infrastructure-based traveler information strategies (via freeway and arterial DMS) are already detailed in the previous freeway and arterial management sections. This section focuses on additional enhancements to regional traveler information systems, as well as implementing key regional strategies.

Table 14 – Traveler Information: Enhance 511

Strategy	Project	Description of Project	Owning Jurisdiction	Devices/Study
Enhance 511 and az511.com to provide expanded freeway and arterial information	HCRS Arterial Information enhancements	Implement additional enhancements to HCRS to allow web and phone users the ability to request arterial incidents for McDowell, Buckeye and MC 85	ADOT	Software Development and Integration
	I-10 construction menu option on 511	Implement and update a floodgate message on 511 for I-10 construction activities and restrictions. Update weekly or as conditions warrant	ADOT	Software Development and Integration

Table 14 – Traveler Information: Enhance 511 (continued)

Strategy	Project	Description of Project	Owning Jurisdiction	Devices/Study
Enhance 511 and az511.com to provide expanded freeway and arterial information (continued)	E-mail alert program	Implement a listserve feature on az511 that would automatically send alerts to subscribers. This would include e-mail and/or mobile phones.	ADOT	Software Development and Integration

Table 15 – Traveler Information: Innovative Tools

Strategy	Project	Description of Project	Owning Jurisdiction	Devices/Study
Implement innovative traveler information tools to provide real-time information	Install additional travel time screens at key locations in Avondale, Goodyear and Phoenix	Develop customized web-based applications for LCD screens (similar to those located at the RCC). Install at major employers in the corridor area.	MCDOT	One integrated internet portal of real-time transit information
	Launch phone-based freeway speed map information program	Develop freeway speed map application that can be accessed via mobile phones and personal wireless devices. Incorporate speed data for ICMS corridor segment with existing FMS speed information.	MAG/ADOT	Already underway. Need to incorporate speed data for ICMS corridor segment
	Provide freeway travel times on I-10 DMS	Expand regional travel time program to include travel times on I-10 DMS in the ICMS corridor area. This will be on existing DMS between SR101 and I-17, and provides travel times during peak travel and peak directional lanes.	ADOT	

Table 16 – Traveler Information: Expand Availability

Strategy	Project	Description of Project	Owning Jurisdiction	Devices/Study
Expand availability of traveler information within the I-10 corridor, to include freeway and arterial conditions information	Implement fixed and portable HAR	Procure and utilize a fixed HAR station on I-10 west of SR 85, and on I-10 eastbound toward Tucson (outside immediate corridor area). Procure and implement portable HAR at key locations along I-10.	ADOT	Two Fixed HAR installations and 4 portable units.
	Arterial CCTV camera feeds to agencies and media	Implement a web-based resource for arterial CCTV images for viewing by media and agency staff. Integrate wireless and leased line arterial camera feeds from MCDOT, Avondale, Goodyear and Phoenix.	MCDOT	Intranet portal, including Camera Cameleon.

Table 17 – Travel Information: Enhance Media Coverage

Strategy	Project	Description of Project	Owning Jurisdiction	Devices/Study
Enhance media coverage and media traffic advisory information in the I-10 ICMS corridor	Improve coordination and consistency of information provided to media	Convene a second summit of media traffic reporters and agency PIOs to develop a focused communications plan for traffic information distribution in the I-10 ICMS corridor area. Discuss unique logistics of interagency communications during multiple closures. Coordinate closely with outreach efforts.	ADOT/MCDOT	

3.1.5 Outreach and Public Information Strategies

A multi-level outreach and awareness strategy will need to be developed, implemented, and executed. A Public Outreach team, comprised of Public Information Officers from ADOT, MAG, Valley Metro, MCDOT, and cities within the I-10 Corridor will champion the outreach and awareness program. These agencies routinely partner on major outreach initiatives, as well as partner with local media and information service providers to distribute timely and important information about transportation impacts to residents and commuters. The I-10 ICMS will be aimed at providing commuters and employers with information and tools they need to implement grass-roots strategies to reduce congestion.

Key objectives for the outreach and public information strategies are to:

- Promote awareness of available traveler information tools and resources using a multi-level media relations and advertising campaign;

- Develop targeted outreach campaigns to specific audiences within the corridor, including commuters, freight, as well as bilingual residents; and
- Implement a commuter-focused outreach program that will provide important information for those residents that must use the corridor on a daily basis, as well as promote commute alternatives (such as using public transportation, vanpool/ridesharing and alternative work modes such as telecommuting). Providing incentives for commuters to use alternate modes or alternative work scheduling will be a significant focus of the outreach campaign.

Table 18 – Outreach: Promote Awareness of Traveler Information

Project	Description of Project	Involved Agencies	Devices/Study
Ongoing media/advertising campaign	Develop a comprehensive media campaign, to include paid media, advertising as well as non-paid public service announcements. This would include media spots during weekday peak travel (both radio and TV). Develop multi-lingual ads and distribute to local radio stations (including Spanish). Also includes billboards, ads, web and e-mail advertising.	ADOT, Valley Metro	Radio and TV spot production, paid media (radio and TV)
Develop video PSA	Develop a 15-20 minute video on the I-10 reconstruction and the tools that agencies are implementing to ease congestion. Emphasis is on awareness and education. Highlight 'tips for travelers'. Promote 511 and AZ511.com as key resources for up to date information. Discuss rideshare/vanpooling as commute options, as well as telecommuting or flex hours. Phoenix Channel 11 would be an ideal outlet. Valley Metro Transit Now! is an existing transportation feature. Coordinate with other network and local channels to air.	ADOT, Valley Metro	PSA Production, English and Spanish
511 roadside signs	Install additional 511 road signs in the metro area. Placing signs on all metro area freeway corridors will help promote the availability of this resource valley wide.	ADOT	30 additional signs

Table 19 – Outreach: Develop Campaigns

Project	Description of Project	Involved Agencies	Devices/Study
CVO/Freight	Coordinate with AZ Trucking Association to develop a focused CVO information campaign. Develop collateral material about construction project and restrictions, highlight available traveler information resources (511, HAR, DMS). Obtain feedback from trucking association members on how to ease I-10 burden on freight.	ADOT/MCDOT	collateral material, workshops
Developers/ Contractors	There is a tremendous amount of development underway on key parallel arterials in Goodyear and Avondale. Heavy construction vehicles working at these sites need to know about restrictions or closures. Will require coordination among City PIOs to distribute information to developers/ contractors. Develop a listserve of contacts, issue weekly e-mails about closures and restrictions, as well as resources for where to find more information.	City PIOs	Collateral material, weekly e-mails
Bi-lingual campaign for Hispanic community	Develop and implement a bilingual campaign to include collateral pieces and advertising in Spanish. Coordinate with other strategies.	ADOT, MAG, Valley Metro	Additional bilingual resources

Table 20 – Outreach: Commuter Focused Outreach

Project	Description of Project	Involved Agencies	Devices/Study
Vanpool Expansion	Provide outreach and awareness for vanpool expansion program. This would include transit incentives and subsidies, as well as start up incentives.	Valley Metro	Vanpool startup and incentives
I-10 Corridor Commuter Forums – I-10 Challenge	Establish monthly I-10 Corridor Forums for the I-10 Challenge. Implement incentives and drawings for rideshare, transit and telecommuting (i.e., gas cards, gift cards, promotional items, etc.)	ADOT, MAG, Valley Metro, City PIOs	Monthly location, collateral pieces, promotion
Monthly e-newsletter	Establish a listserve of employers within the corridor, and commuters that frequently use the I-10 corridor. Distribute information and updates.	ADOT, MAG, Valley Metro, City PIOs	Listserve development and maintenance, and monthly e-newsletter

3.2 Performance Measures

By taking into account the linkages between goals and performance measures, ICMS Concept of Operations identifies the appropriate "Performance Measures Success Thresholds" with stakeholders to provide an indication of how the I-10 ICMS goals and visions have been achieved through the implementation of ICMS. **Table 21** below summarizes potential performance measures for the I-10 ICMS project. Level-1 are the generic and corridor-wide performance measures, and Level-2 are detailed breakdowns or indicators which can potentially demonstrate the effectiveness of the individual ICMS strategy in meeting the ICMS objectives.

Table 21 – ICMS Performance Measures and Goals

ICMS Focus Areas	Performance Measures Level 1	Performance Measures Level 2	Matching ICMS Goals*
Corridor Mobility and Reliability	Average travel time per trip for the corridor and each network	Peak and non-peak period average travel time for freeway and arterials	Goal 1
		Buffer Index – the amount of extra "buffer" time needed to be on-time 95 percent of the time for freeway and arterial	Goal 1
		Variation in daily average travel time	Goal 1, 5
		Travel Time Index for freeway and arterial – a ratio of travel time in the peak period or other corridor condition to a target or acceptable travel time	Goal 1, 5
	Average delay per trip for the corridor and each network	Peak and non-peak period average delay for freeway and arterial	Goal 1, 5
	Total throughput for the corridor and each network	Peak and non-peak period total throughput for freeway and arterial	Goal 1, 5
	Percentage of system congested	Percentage of mile congested (based level of service E or F) per time	Goal 1, 5
Corridor Traveler Information	Number of users of travel information services	Number of calls to 511(request for I-10 information)	Goal 3, 6, 7
		Number of visits to www.az511.gov	Goal 4, 6, 7
		Number of visits to real-time transit information website	Goal 3, 4, 5, 6, 7
	Quality of information being provided to travel information services	Customer satisfaction with corridor travel information (user surveys)	Goal 6, 7
	Number of messages displayed on freeway and arterial DMS	Number of "cross-network" message displayed on all DMS	Goal 3, 4, 6, 7

Table 21 – ICMS Performance Measures and Goals (continued)

ICMS Focus Areas	Performance Measures Level 1	Performance Measures Level 2	Matching ICMS Goals*
Corridor Event and Incident Management	Response/Clearance times for incidents (involving multiple corridor stakeholders)	Average incident detection time for freeway and arterial	Goal 2
	Travel time indices for various event or closure types	----------	Goal 2
	Average delay per trip segregated by incident and event (closure) types for the corridor and each network	----------	Goal 2
	Crash rate for the corridor and each network	----------	Goal 2
Corridor Public Transportation	Transit riderships for types of service (local, express and RAPID)	Accuracy of ridership data	Goal 1, 5
	Schedule adherence and travel time	Dwell time at signals and stops for buses	Goal 1, 5
	Average park-and-ride parking availability per facility per time of day	----------	Goal 1, 5, 7
Corridor Management System Support	Percentage of traffic signals coordinated	Percentage of cross-border traffic signals coordinated between cities	Goal 3, 4, 7
	Number of C2C communication links	----------	Goal 3, 4, 7
	Percentage of system uptime for freeway and arterial	Percentage of Transit AVL probe availability – market penetration	Goal 3, 4, 7
	Average time to resume service in system failure	----------	Goal 3, 7

*Note:
Goal 1: Achieve maximum throughout
Goal 2: Improve safety and mobility
Goal 3: Efficient use of tech. and resources to manage demands
Goal 4: New tech. to achieve seamless system operations
Goal 5: Demand Management
Goal 6: Enhance traveler info. resources and awareness
Goal 7: Leverage investments among modes and agencies

3.3 Potential ICMS Priorities

Implementing the individual projects in the corridor test area will require coordinated development and strategic planning to accomplish the goals of the project effectively and within a reasonable amount of time. An important consideration is availability of funding to support implementation and operations. The ICMS Concept of Operations looks into the potential priority strategies and phasing. Strategies and projects outlines in Section 2.3 were assessed according to the on-going programs, committed funding, existing infrastructures, and technology maturity.

Potential Program Timeline	ICMS Projects
Committed and On-going Programs	▪ Mobile Traveler Information Portal ▪ TMCs – Goodyear and Avondale permanent TMC facilities ▪ Expanded Transit Services – Papago Freeway Connector (Phoenix and Buckeye) and 3A (Phoenix and Avondale) ▪ Implement Central Signal System (Goodyear) ▪ Enhance 511 and www.az511.gov
Near-Term (Program Year 2011)	▪ Center-to-Center Communication – Regional Connectivity Network (RCN) ▪ Coordinated Traffic Signals, including communications to signals ▪ Communication to and between Traffic Signal Controllers ▪ Portable ITS Traffic Management System ▪ Temporary Ramp Metering System ▪ Temporary ICMS Workstations ▪ Expanded Rideshare/Vanpool Program ▪ Freeway Incident Management – Alternate Route Plan ▪ Expand FSP ▪ Arterial Motorist Assist, Additional REACT Response Unit
Long-Term (Program Year 2015)	▪ Radio Frequency Identification Probe Data ▪ Transit AVL – Data Sharing with Transportation Management ▪ Implement Permanent DMS ▪ Implement Additional Arterial CCTV Cameras ▪ Adaptive Ramp Metering System Enhancement ▪ Expand Availability of Traveler Information – HAR ▪ Real-time Transit Information Website

4. PROJECT ARCHITECTURE

4.1 Introduction and Architecture Development Process

The goal of the I-10 ICMS is to develop effective strategies and apply appropriate technologies to better manage congestion through the I-10 corridor in the West Valley. In the near-term, this corridor will be significantly impacted by three-year widening project that will add much needed capacity along an eight-mile segment of I-10 from Sarival Avenue to the Loop 101 interchange. Agencies are partnering to address not only near-term congestion management needs, but the ICMS Concept of Operations is identifying longer-term operational strategies to manage congestion once the reconstruction is complete.

Implementing ICMS strategies will allow agencies to manage and respond to the traffic impacts that the I-10 widening project will create, as well as provide a foundation for a longer-term congestion management approach. Strategies include utilizing available corridor capacity on I-10, McDowell Road, Van Buren Road, and MC 85/Buckeye Road which involves the neighboring jurisdictions with the I-10 corridor. Transit and public transportation are key to congestion management, and there are several recommended strategies that focus on expanding current programs (such as rideshare) as well as extending transit services to communities in the western portion of the corridor. Improving traffic management and coordination among all affected operating agencies will establish a working model for future ICMS development in the MAG region. Key focus areas for the use of ITS technologies in the corridor are:

- Efficient and reliable traffic management tools that support active transportation management;
- Safe and effective maintenance and construction operations and coordination;
- Fast, informed, coordinated incident management and emergency response;
- High quality and quantity of information available to travelers and promotion of services;
- Effective multi-modal transit management and public outreach; and
- Safe roadways throughout the I-10 corridor area.

The strategies and technologies that will be identified for this ITS architecture take into account that the operating environment will be an extended freeway construction zone with consideration for a post-construction operations plan for the corridor. This architecture differs from a 'true' regional ITS architecture, in that it is capturing specific connectivity and information sharing among agencies in the corridor area to support ICMS. The purpose of developing this ICMS architecture is to illustrate and document regional integration so that planning and deployment can take place in an organized and coordinated fashion.

The success of an ITS architecture effort hinges on effective use and implementation of the architecture once it is developed. The architecture is an important tool for use in transportation planning, programming, and project implementation. It can identify opportunities for making ITS investments in a cost-effective and strategically significant fashion where the benefits to the stakeholders are realized.

4.2 Market Packages to Support ICMS in the I-10 Corridor

In the National ITS Architecture, services and functions are referred to as market packages. Market packages include stakeholders and elements that work together to provide a service to satisfy identified stakeholder needs. Market packages illustrate the information exchanges between subsystems, such as center-to-center communications between agencies, or center-to-field connections between an operations center and the field infrastructure that it operates. Examples of market packages from the National ITS Architecture include Traffic Information Dissemination, Traffic Incident Management System, and Work Zone Management. There are currently a total of 91 market packages identified in the recently updated National ITS Architecture, Version 6.0.

The inventory and interview process with stakeholders as part of the development of the ITS-OTMC Federal Grant application resulted in a list of potential strategies for ITS deployment within the I-10 corridor. Each strategy that included the integration or deployment of ITS technologies was mapped to a specific market package that included that functionality. (It is important to note that there were several strategies identified that did not require any system interfaces or automated information exchanges.) The list of market packages produced from that effort will be used to implement ITS technologies to satisfy the needs of the corridor area.

The market packages selected from the National ITS Architecture were chosen based on the needs and issues identified by stakeholders and general operational systems that would provide the citywide and regionwide functionality being sought. Applying stakeholder needs and priorities to the National ITS Architecture, 17 market packages were selected for the MAG I-10 ICMS corridor area. Selected market packages for the MAG ICMS are identified in **Table 22**. The reference number before each market package refers to the relevant reference in the National ITS Architecture.

Table 22 – Market Package Selection and Applicability to ICMS

Market Package	Description	Applicability to I-10 ICMS
ATMS01 Network Surveillance	Includes traffic detectors, CCTV cameras, other surveillance equipment, supporting field equipment and fixed point to point communications to transmit the collected data back to a traffic management center.	Providing enhanced video surveillance coverage and traffic detection in areas where the existing system is either limited or non-existent will give transportation and emergency agencies more tools to effectively manage the roadways. Existing capabilities include ADOT's FMS and there is limited deployment of arterial surveillance and detection systems.
ATMS02 Traffic Probe Surveillance	Provides an alternative approach for surveillance of the roadway network using non-intrusive detection. Probe vehicles are tracked and position and speed information utilized to determine road network conditions such as average speed and congestion conditions.	RFID on freeways and arterials was proposed as part of the OTMC grant application. Probe data could provide a data collection mechanism for the segment of freeway not covered by ADOT's FMS, as well as on arterials where there is limited detection capabilities. Private sector may provide some alternatives for data collection.

Table 22 – Market Package Selection and Applicability to ICMS (continued)

Market Package	Description	Applicability to I-10 ICMS
ATMS03 Surface Street Control	Provides the central control and monitoring equipment, communication links and signal control equipment that support local street and/or arterial traffic management. This market package is consistent with typical urban traffic signal control systems.	The ability to manage arterial traffic control systems as well as implement coordinated timing approaches is a key strategy for the ICMS. Avondale, Phoenix and MCDOT presently operate traffic signals systems, and Goodyear is in the process of selecting and implementing a signal system.
ATMS04 Freeway Control	Provides the communications and roadside equipment to support ramp control, lane controls and interchange control for freeways. This market package is consistent with typical urban traffic freeway control systems. Also includes the capability to utilize surveillance information for detection of incidents.	Enhancing the freeway monitoring capability through an upgrade to adaptive ramp metering, deploying of temporary ramp metering where there is none existing, deploying of surveillance equipment such as CCTV and traffic detection will give ADOT greater monitoring and management capability during major construction or a major incident on the freeway. Indirectly, the surrounding local agencies will benefit from increased knowledge of the freeway congestion as traffic may detour onto arterials to avoid congestion on the freeway.
ATMS06 Traffic Information Dissemination	Provides driver information using roadway equipment such as dynamic message signs or highway advisory radio. Information can include traffic and road conditions, closure and detour information, incident information, emergency alerts and driver advisories.	ICMS strategies focus on enhancing and expanding current traveler information capabilities, including additional DMS on freeways and arterials. Highway advisory radio was also identified as an important traveler information tool, particularly for CVO traffic, to warn travelers in advance of congested areas.
ATMS07 Regional Traffic Management	Sharing of traffic information and control among traffic management centers to support a regional control strategy. The nature of optimization and extent of information and control sharing is determined through working arrangements between jurisdictions.	Jurisdictional boundaries between cities, Maricopa County, and ADOT are blurred when an incident or construction occurs at a boundary. This market package would expand the center-to-center communications and information sharing capabilities among freeway, arterial and transit management agencies in the corridor area.
ATMS08 Traffic Incident Management System	Supports management and coordination for unexpected incidents and planned events so that the impact to the transportation network and traveler safety is minimized. It supports traffic operations personnel in developing an appropriate response in coordination with emergency management, maintenance and construction management, and other incident response personnel.	Effective coordination of staff and technology resources for incident management on the arterial and freeway networks reduces incident response time, traffic delay, and incident clearance times. Providing communications between services where there is limited connectivity or no connection at all such as between public safety and local transportation agencies will enhance incident management operations in the I-10 corridor area.
ATMS15 Railroad Operations Coordination	Provides an additional level of strategic coordination between freight rail operations and traffic management centers. Could include train schedules, maintenance schedules or any other anticipated HRI closures.	Coordinating railroad operations and traffic management operations assists in incident management.

Table 22 – Market Package Selection and Applicability to ICMS (continued)

Market Package	Description	Applicability to I-10 ICMS
ATIS1 Broadcast Traveler Information	Collects traffic conditions, advisories, general public transportation, incident information, roadway maintenance and construction information, air quality and weather information, and broadly disseminates this information through existing infrastructures (radio, cell phones, etc.). DMS, HAR, phone and web applications are addressed in other market packages	This market package would address the existing connections between ADOT, the media and other traveler information service providers. 511 and web applications are addressed in other market packages. Strengthening broadcast traveler information services such as media increases traveler awareness of incidents and construction affecting the congestion of the roadways.
ATIS2 Interactive Traveler Information	Provides tailored information in response to a traveler request. The traveler can obtain current information regarding traffic conditions, roadway maintenance and construction, transit services, ride share/ride match, parking management, detours and pricing information. This market package is consistent with kiosks, 511 or web-based services.	Interactive traveler information is already established in the region through the 511, az511.gov, valleymetro.org and other web sites. This market package provides the means for users to select the type of information they want to receive, and then the system relays current travel conditions, closures, services, etc. based on the travelers request.
APTS1 Transit Vehicle Tracking	Monitors current transit vehicle location using an automated vehicle location system. Location data may be used to determine real-time schedule adherence and update the transit system's schedule in real-time.	Vehicle location tracking devices currently installed on all transit vehicles that function in the corridor area could be used to provide enhanced transit traveler information through the use of real-time maps and schedule adherence disseminated to the public through transit websites and kiosks. An additional strategy was discussed that would share AVL and schedule performance data with ADOT and arterial management agencies to provide a snapshot of current speeds/conditions.
APTS2 Transit Fixed-Route Operations	Performs vehicle routing and scheduling, as well as operator assignment and system monitoring for fixed-route and flexible-route transit services.	Building upon the transit operations in the corridor area, potential strategies to expand bus service to new areas and to use transit vehicles for location tracking and travel time data will provide travelers with mode option information, as well as provide transit data to agency partners. Many functions in this market package are existing, due in large part to the investments made by Phoenix Transit and Valley Metro.
APTS8 Transit Traveler Information	Provides transit users at transit stops and on board transit vehicles with ready access to transit information. Services include stop annunciation, imminent arrival signs and real-time transit schedule displays. Systems that provide custom transit trip itineraries and other tailored transit information services are also represented by this market package.	Many of these functions and services are already in place (on-board announcements, enhanced web trip planning, etc.). Key transit traveler information strategies focused on integrating transit info with 511, and implementing real-time transit information features on Valley Metro's web site and through other systems.

Table 22 – Market Package Selection and Applicability to ICMS (continued)

Market Package	Description	Applicability to I-10 ICMS
EM02 **Emergency Routing**	Supports and dynamic routing of emergency vehicles. Traffic information, road conditions and suggested routing information are provided to enhance emergency vehicle routing. Includes signal preemption and priority applications.	Preemption is already in place at several intersections within the corridor area. Several functions within this market package are dependent on additional integration among public safety and transportation management agencies.
EM04 **Roadway Service Patrols**	Supports the roadway service patrol vehicles that aid motorists, offering rapid response to minor incidents (flat tire, accidents, out of gas) to minimize disruption to the traffic stream. This market package monitors service patrol vehicle locations and supports vehicle dispatch.	There are several roadway service patrol and traffic incident response units already active in the corridor area. DPS operates the Freeway Service Patrol, which is a motorist assist service. The OTMC application proposed establishing a similar motorist assist program for the arterial network, which would be managed by Maricopa County DOT. Traffic incident response on freeways is handled by ADOT's ALERT, and the arterial incident response team REACT is managed by MCDOT. Roadway service patrols are effective in reducing incident-related traffic delay, securing the incident scene for responders, and enhancing motorist safety in the incident area.
MC08 **Work Zone Management**	Directs activity in work zones, controlling traffic through portable dynamic message signs and informing other groups of activity for better coordination management. Also provides speed and delay information to motorists prior to the work zone.	Construction along I-10 through the corridor area will have a significant negative effect on traffic congestion, delay, and vehicle safety. Establishing direct coordination of all key existing and new devices and all affected agencies during the construction phasing will minimize the negative impact that construction inevitably has on traffic movement. This market package also applies to arterial work zones.
MC10 **Maintenance and Construction Activity Coordination**	Supports the dissemination of maintenance and construction activity to centers that can utilize it as part of their operations. (i.e., traffic management, transit, emergency management).	Establishing direct communication between agencies is emphasized here in order to plan for upcoming changes in construction and coordinate future work plans and schedules. This will be critical in the I-10 corridor with the freeway construction, as well as anticipated construction activities on the parallel arterials.

Using Turbo Architecture, these market packages were customized with ICMS Corridor partner agencies and field equipment, and the interfaces between agencies and infrastructure were established. Interfaces have been identified for each element in the MAG ICMS ITS Architecture and each element has been mapped to those other elements with which it must interface. Defined architecture flows between the inventory items are shown in the **Appendix B**; these diagrams were generated from the Turbo Architecture database developed in conjunction with this architecture chapter. For some market packages, there are multiple versions which have been customized to reflect the particular agency for which that market package is focusing on. Others are shown as a consolidated function, although there may be multiple agencies represented within a single diagram.

Architecture flows between the many different components in the market packages define the specific information (data) that is exchanged between each component. Each architecture flow has one or more data flows that specify what information is exchanged and the direction of the exchange. These data flows could be requests for information, alerts and messages, status requests, broadcast advisories, construction status, and other key information that is needed to be transferred between devices and agencies. An example of an architecture flow is when road network conditions are transmitted from the ADOT TOC to the MCDOT TMC.

4.3 Architecture Interconnects

4.3.1 Regional System Interconnect Diagram

A system interconnect diagram, or "sausage diagram" as shown in **Figure 8** show the systems and primary interconnects in the MAG ICMS corridor area. The National ITS Architecture interconnect diagram has been customized for the MAG ICMS using the applicable market packages and information flows in those market packages. This figure summarizes the existing, planned, and future ITS elements for stakeholders in the corridor in the context of a physical interconnect. Subsystems and elements specific to the corridor are called out in the boxes surrounding the main interconnect diagram, and these are color-coded to the subsystem to which they are associated.

The primary purpose of the architecture is to identify the connections between transportation systems and elements in the MAG ICMS corridor. **Figure 8** shows the high-level relationships of the elements in the corridor area. How the systems interface with each other is an integral part of the overall ITS architecture, and these are shown in the market package/interface outputs described previously and included in **Appendix B**.

Legend

Subsystem	Architecture Elements Map To National ITS Architecture
Subsystem	No Architecture Elements Map To National ITS Architecture

***Elements are *planned or future*, not *existing*.**

Traffic Management
- ADOT TOC
- MCDOT TMC
- *Avondale TMC
- *Goodyear TMC
- Phoenix TMC
- *Buckeye TMC

Emergency Management
- DPS Dispatch
- Local Public Safety Dispatch
- Phoenix Dispatch Center
- Maricopa County Sheriff
- ADOT TOC
- MCDOT TMC

Information Service Provider
- ADOT HCRS
- Phoenix Public Transit Traveler Information Service
- ValleyMetro.org Traveler Information Service
- ADOT TOC
- *Avondale TMC
- *Goodyear TMC
- MCDOT TMC
- Phoenix TMC
- *Buckeye TMC

Maintenance and Construction Management
- ADOT District 1 Maintenance
- Phoenix Public Works/Streets
- Avondale Public Works/Streets
- Goodyear Public Works/Streets
- MCDOT Maintenance
- Buckeye Public Works/Streets

Transit Management
- Phoenix Public Transit OCC
- Valley Metro

Personal Information Access
- AZ511 Traveler Information Service
- AZ511.gov Traveler Information Service
- Personal Computing Devices
- Mobile Traveler Information Portal

Remote Traveler Support
- Media
- *Transit Kiosks

Emergency Vehicle Subsystem
- FSP Vehicles
- *REACT Vehicles
- ALERT Vehicles
- *Arterial Motorist Assist Vehicles
- Emergency Vehicles

Transit Vehicle Subsystem
- Valley Metro Transit Vehicles (including AVL)
- Phoenix Public Transit Vehicles (including AVL)

Maintenance and Construction Vehicle Subsystem
- *ADOT Portable TMS
- *Avondale Portable TMS
- *Goodyear Portable TMS
- *MCDOT Portable TMS
- *Buckeye Portable TMS

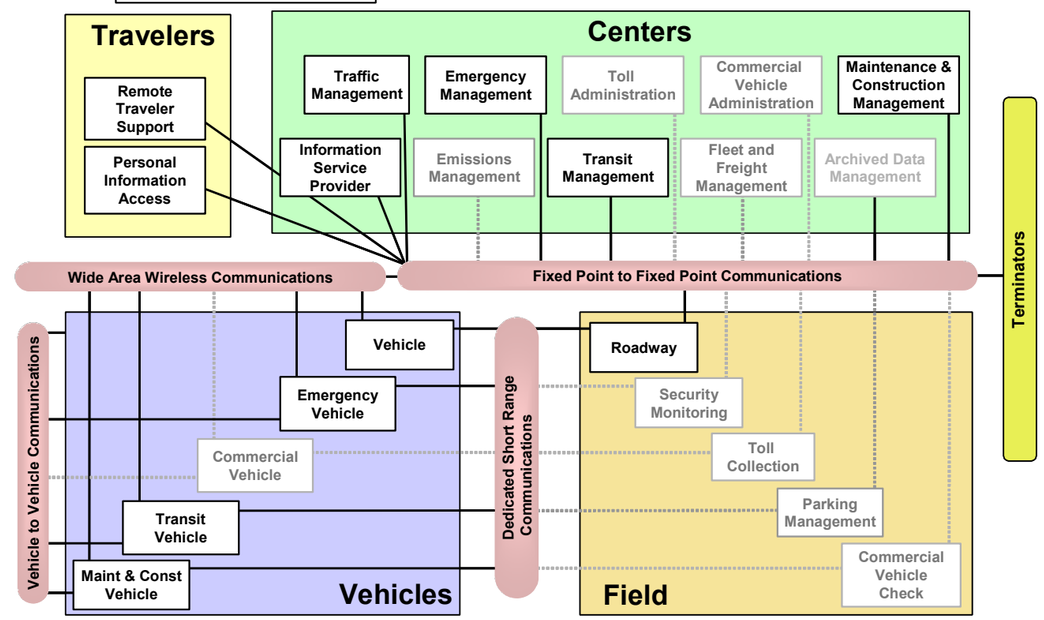

Roadway Subsystem
- ADOT DMS
- ADOT Freeway CCTV Cameras
- *ADOT HAR
- *ADOT Portable TMS
- ADOT Traffic Detection
- Avondale Arterial CCTV Cameras
- Avondale Arterial DMS
- *Avondale Portable TMS
- Avondale Traffic Detection
- Avondale Traffic Signals
- *Buckeye Arterial CCTV Cameras

Roadway Subsystem (continued)
- *Buckeye Arterial DMS
- *Buckeye Portable TMS
- *Buckeye Traffic Detection
- *Buckeye Traffic Signals
- *Goodyear Arterial CCTV Cameras
- *Goodyear Arterial DMS
- *Goodyear Portable TMS
- *Goodyear Traffic Detection
- Goodyear Traffic Signals
- *MCDOT Arterial DMS
- *MCDOT Arterial CCTV Cameras

Roadway Subsystem (continued)
- *MCDOT Portable DMS
- *MCDOT Traffic Detection
- MCDOT Traffic Signals
- Permanent Ramp Meters
- Phoenix Arterial DMS
- Phoenix Arterial CCTV Cameras
- Phoenix Traffic Detection
- Phoenix Traffic Signals
- *Temporary Ramp Meters
- HRI Electronic Surveillance

Emergency System Operator and Other Emergency Management
- DPS Dispatch
- Maricopa County Sheriff
- Phoenix Dispatch Center

Maintenance and Construction Field Personnel
- Maintenance and Construction Field Personnel

Map Update Provider
- *Transit Map Update Provider

Media
- Media

Other MCM and Other Traffic Management
- ADOT District 1 Maintenance
- Avondale Public Works/Streets
- Goodyear Public Works/Streets
- MCDOT Maintenance
- Phoenix Public Works/Streets
- Buckeye Public Works/Streets

Other Roadway
- ADOT Traffic Detection
- Avondale Traffic Detection
- Avondale Traffic Signals
- *Buckeye Traffic Detection
- *Buckeye Traffic Signals
- *Goodyear Traffic Detection
- Goodyear Traffic Signals
- *MCDOT Traffic Detection
- MCDOT Traffic Signals
- Permanent Ramp Meters
- Phoenix Traffic Detection
- Phoenix Traffic Signals
- *Temporary Ramp Meters

Other Transit Management
- Phoenix Public Transit OCC
- Valley Metro

Rail Operations
- Railroad Operations

Surface Transportation Weather Service
- ADOT RWIS

Traffic Operations Personnel
- ADOT TOC Traffic Operations Personnel
- *Avondale Traffic Operations Personnel
- *Buckeye Traffic Operations Personnel
- *Goodyear Traffic Operations Personnel
- MCDOT TMC Traffic Operations Personnel
- Phoenix Traffic Operations Personnel

Transit System Operators
- Phoenix Public Transit System Operators
- Valley Metro Transit System Operators

Figure 8 – MAG ICMS Regional System Interconnect Diagram

4.3.2 Subsystem Descriptions

Market packages depict current and future information transfer between ITS devices, management centers and people. Those elements that represent the source of multiple levels of information transfer are called "subsystems". Subsystems are grouped into four classes: Centers, Field, Vehicles, and Travelers. Example subsystems are the Traffic Management Subsystem, the Vehicle Subsystem, and the Roadway Subsystem. These correspond to the physical world: respectively traffic operations centers, automobiles, and roadside signal controllers.

Each subsystem in a market package satisfies a particular role in that functionality. For example, as part of the ATMS07 – Regional Traffic Management market package, the Traffic Management Subsystem gives and receives information from various other subsystems such as the Roadway Subsystem (ITS devices deployed on the roads) and the Other Traffic Management Subsystem (other management centers that share information). The Traffic Management Subsystem serves to support and provide the foundation of information transfer for the functionality of Regional Traffic Management. **Table 23** summarizes the functions of the various subsystems that are used in the MAG ICMS ITS Architecture. These descriptions were adapted from the definitions included in the National ITS Architecture version 6.0. This will give stakeholders an understanding of the type of functionality through ITS deployment that will be implemented in and around their jurisdictions. When deployed in an organized and strategic approach, the integrated corridor concept will promote the sharing of information and coordinated response which enhances the areas transportation network efficiency.

Table 23 – Architecture Subsystem Descriptions

Subsystem	Description
Emergency Management	The Emergency Management Subsystem represents public safety, emergency management, and other agency systems that support incident management, disaster response and evacuation, security monitoring, and other security and public safety-oriented ITS applications. The subsystem includes the functions associated with fixed and mobile public safety communications centers including public safety call taker and dispatch centers operated by police (including transit police), fire, and emergency medical services. This subsystem monitors alerts, advisories, and other threat information and prepares for and responds to identified emergencies. It interfaces with other Emergency Management Subsystems to support coordinated emergency response involving multiple agencies. As emergency response progresses, situation information including damage assessments, response status, evacuation information, and resource information are shared to keep all allied agencies appraised of the response. Interface with the Transit Management Subsystem allows coordinated use of transit vehicles to facilitate response to major emergencies and to support evacuation efforts. The subsystem tracks and manages emergency vehicle fleets using real-time road network status and routing information from the other center subsystems to aide in selecting the emergency vehicle(s) and routes that will provide the timeliest response. Interface with the Traffic Management Subsystem allows strategic coordination in tailoring traffic control to support emergency vehicle ingress and egress, implementation of special traffic restrictions and closures, evacuation traffic control plans, and other special strategies that adapt the transportation system to better meet the unique demands of an emergency.

Table 23 – Architecture Subsystem Descriptions (continued)

Subsystem	Description
Emergency Vehicle	This subsystem resides in an emergency vehicle and provides the sensory, processing, storage, and communications functions necessary to support safe and efficient incident response. The subsystem represents a range of vehicles including those operated by police, fire, and emergency medical services. In addition, this subsystem represents other incident response vehicles including towing and recovery vehicles and freeway service patrols. The Emergency Vehicle Subsystem includes two-way communications to support coordinated response to emergencies in accordance with an associated Emergency Management Subsystem. Emergency vehicles are equipped with automated vehicle location capability for monitoring by vehicle tracking and fleet management functions in the Emergency Management Subsystem. Using these capabilities, the appropriate emergency vehicle to respond to each emergency is determined. Route guidance capabilities within the vehicle enable safe and efficient routing to the emergency. In addition, the emergency vehicle may be equipped to support signal preemption through communications with the Roadway Subsystem.
Information Service Provider	This subsystem collects, processes, stores, and disseminates transportation information to system operators and the traveling public. The subsystem can play several different roles in an integrated ITS. In one role, the ISP provides a data collection, fusing, and repackaging function, collecting information from transportation system operators and redistributing this information to other system operators in the region and other ISPs. In this information redistribution role, the ISP provides a bridge between the various transportation systems that produce the information and the other ISPs and their subscribers that use the information. The ISP is most commonly implemented as an Internet web site, but it represents any traveler information distribution service including systems that broadcast digital transportation data (e.g., satellite radio networks) and systems that support distribution through dedicated short range communications networks. The ISP accomplishes these roles using constantly evolving technologies like the Internet, direct broadcast communications (email alerts, pagers, satellite radio network data broadcasts), communications through dedicated short range communications networks, etc.
Maintenance and Construction Management	The Maintenance and Construction Management Subsystem monitors and manages roadway infrastructure construction and maintenance activities. Representing both public agencies and private contractors that provide these functions, this subsystem manages fleets of maintenance and construction. The subsystem receives a wide range of status information from these vehicles and performs vehicle dispatch, routing, and resource management for the vehicle fleets and associated equipment. The subsystem participates in incident response by deploying maintenance and construction resources to an incident scene, in coordination with other center subsystems. The subsystem manages equipment at the roadside, including environmental sensors and automated systems that monitor adverse road and surface weather conditions. The subsystem manages the repair and maintenance of both non-ITS and ITS equipment including the traffic controllers, detectors, dynamic message signs, signals, and other equipment associated with the roadway infrastructure. The subsystem remotely monitors and manages ITS capabilities in work zones, gathering, storing, and disseminating work zone information to other systems. It manages traffic in the vicinity of the work zone and advises drivers of work zone status (either directly at the roadside or through an interface with the Information Service Provider or Traffic Management subsystems.) It schedules and manages the location and usage of maintenance assets (such as portable dynamic message signs). Construction and maintenance activities are tracked and coordinated with other systems, improving the quality and accuracy of information available regarding closures and other roadway construction and maintenance activities.

Table 23 – Architecture Subsystem Descriptions (continued)

Subsystem	Description
Maintenance and Construction Vehicle	This subsystem resides in maintenance, construction, or other specialized service vehicle or equipment and provides the sensory, processing, storage, and communications functions necessary to support highway maintenance and construction. All types of maintenance and construction vehicles are covered, including heavy equipment and supervisory vehicles. The subsystem provides two-way communications between drivers/operators and dispatchers and maintains and communicates current location and status information.
Personal Information Access	This subsystem provides the capability for travelers to receive formatted traffic advisories from their homes, place of work, major trip generation sites, personal portable devices, over multiple types of electronic media. These capabilities also provide basic routing information and allow users to select those transportation modes that allow them to avoid congestion, or more advanced capabilities to allow users to specify those transportation parameters that are unique to their individual needs and receive travel information.
Remote Traveler Support	This subsystem provides access to traveler information at transit stations, transit stops, other fixed sites along travel routes (e.g., rest stops), and major trip generation locations such as special event centers, hotels, office complexes, amusement parks, and theaters. Traveler information access points include kiosks and informational displays supporting varied levels of interaction and information access. At transit stops, simple displays providing schedule information and imminent arrival signals can be provided.
Roadway	This subsystem includes the equipment distributed on and along the roadway that monitors and controls traffic and monitors and manages the roadway itself. Equipment includes traffic detectors, environmental sensors, traffic signals, highway advisory radios, dynamic message signs, CCTV cameras and video image processing systems, and freeway ramp metering systems. This subsystem also provides the capability for environmental monitoring including sensors that measure road conditions, surface weather, and vehicle emissions. Work zone systems including work zone surveillance, traffic control, driver warning, and work crew safety systems are also included.
Traffic Management	The Traffic Management Subsystem monitors and controls traffic and the road network. It represents centers that manage a broad range of transportation facilities including freeway systems, rural and suburban highway systems, and urban and suburban traffic control systems. This subsystem communicates with the Roadway Subsystem to monitor and manage traffic flow and monitor the condition of the roadway, surrounding environmental conditions, and field equipment status. This subsystem coordinates with the Maintenance and Construction Management Subsystem to maintain the road network and coordinate and adapt to maintenance activities, closures, and detours. Incidents are detected, verified, and incident information is provided to allied agencies, drivers, and information service providers. This subsystem also manages traffic and transportation resources to support allied agencies in responding to, and recovering from, incidents ranging from minor traffic incidents through major disasters. The subsystem communicates with other Traffic Management Subsystems to coordinate traffic information and control strategies in neighboring jurisdictions.

Table 23 – Architecture Subsystem Descriptions (continued)

Subsystem	Description
Transit Management	The Transit Management Subsystem manages transit vehicle fleets and coordinates with other modes and transportation services. It provides operations, maintenance, customer information, planning, and management functions for the transit property. It spans distinct central dispatch and garage management systems and supports the spectrum of fixed route, flexible route, paratransit services, transit rail, and bus rapid transit (BRT) service. The subsystem's interfaces allow for communication between transit departments and with other operating entities such as emergency response services and traffic management systems. It provides current transit operations data to other center subsystems. It interfaces with the Emergency Management Subsystem to allow coordinated use of transit vehicles to facilitate response to major emergencies or evacuations. The Transit Management Subsystem collects and stores accurate ridership levels and implements fare structures for use in electronic fare collection. It collects operational and maintenance data from transit vehicles, manages vehicle service histories, and assigns vehicle operators and maintenance personnel to vehicles and routes. The Transit Management Subsystem also provides the capability for automated planning and scheduling of public transit operations. The subsystem furnishes travelers with real-time travel information, continuously updated schedules, schedule adherence information, transfer options, and transit routes and fares. In addition, the subsystem supports transit security features. This includes monitoring silent alarms, both passenger and operator initiated, on-board transit vehicles.
Transit Vehicle	This subsystem resides in a transit vehicle and provides the sensory, processing, storage, and communications functions necessary to support safe and efficient movement of passengers. The types of transit vehicles containing this subsystem include buses, paratransit vehicles and other vehicles designed to carry passengers. The subsystem collects accurate ridership levels and supports electronic fare collection. The subsystem supports a traffic signal prioritization function that communicates with the roadside subsystem to improve on-schedule performance. Automated vehicle location functions enhance the information available to the Transit Management Subsystem enabling more efficient operations.
Vehicle	This subsystem provides the sensory, processing, storage, and communications functions necessary to support efficient, safe, and convenient travel. These functions reside in general vehicles including personal automobiles, commercial vehicles, emergency vehicles, transit vehicles, or other vehicle types. Information services provide the driver with current travel conditions and the availability of services along the route and at the destination.

4.3.3 System Concept Diagrams

The market package diagrams depict high-level architecture flows that are shared between generalized subsystems and elements. The Traffic Management subsystem represents in the generalized market packages an operations center that, for example, operates, manages, and controls ITS devices that are deployed on the roadways. However, it does not define in the diagrams which operations center is represented by the Traffic Management subsystem or what ITS devices are being controlled. Customizing the market packages to fit the actual operational framework in the MAG ICMS corridor area provides stakeholders a more detailed representation of the services and information transfers that are happening currently and will happen in the future in their region.

Customized market packages give stakeholders a real-world perspective on the roles and responsibilities their agency will have in providing a particular service to the region. In

order to provide a conceptual perspective of how the market packages work together to support ICMS strategies, high-level conceptual diagrams have been developed for each ICMS operational category (Freeway Management, Arterial Management, Traveler Information and Transit Management). These are shown in **Figures 9 through 12,** and represent an overview of the functional areas that summarize the ITS deployments and systems that are included in the architecture. The identification of specific agencies and specific devices in these diagrams will help stakeholders to understand both the level of importance in their participation and the true feasibility of implementing the various ITS elements identified as future operational capabilities.

4.3.4 Process Specifications

A process specification includes requirements for the system to be able to function as intended and a complete set of inputs and outputs. The statement generally uses "shall" statements and specifies a function in terms that the stakeholder, particularly those that will operate and maintain the systems, will understand. An agreed list of systems has been identified through the market package selection and prioritization component of the architecture development process. The next level of detail in the National ITS Architecture is identifying architecture flows such as "roadway equipment coordination" or "work zone information" between subsystems that will build the market package into a usable system for the stakeholders. Specific data flows with their associated process specifications can then be chosen to permit an architecture flow to operate in a way that satisfies the stakeholders' needs.

A list of process specifications for systems that have not been implemented thus far in the corridor area could change substantially once ITS deployments are underway. An ITS architecture represents the physical deployment and operation of systems in the region while remaining at a conceptual stage to allow for adjustments and technology changes that could dramatically affect the architecture if it defines a high level of detail. Due to the detailed nature of a process specification that defines how the systems will perform and what the system will do, it is important to establish the conceptual foundation of ITS systems that are of priority to the stakeholders and develop process specifications on a project-by-project basis to more accurately represent the true and physical performance of a system as it will be installed.

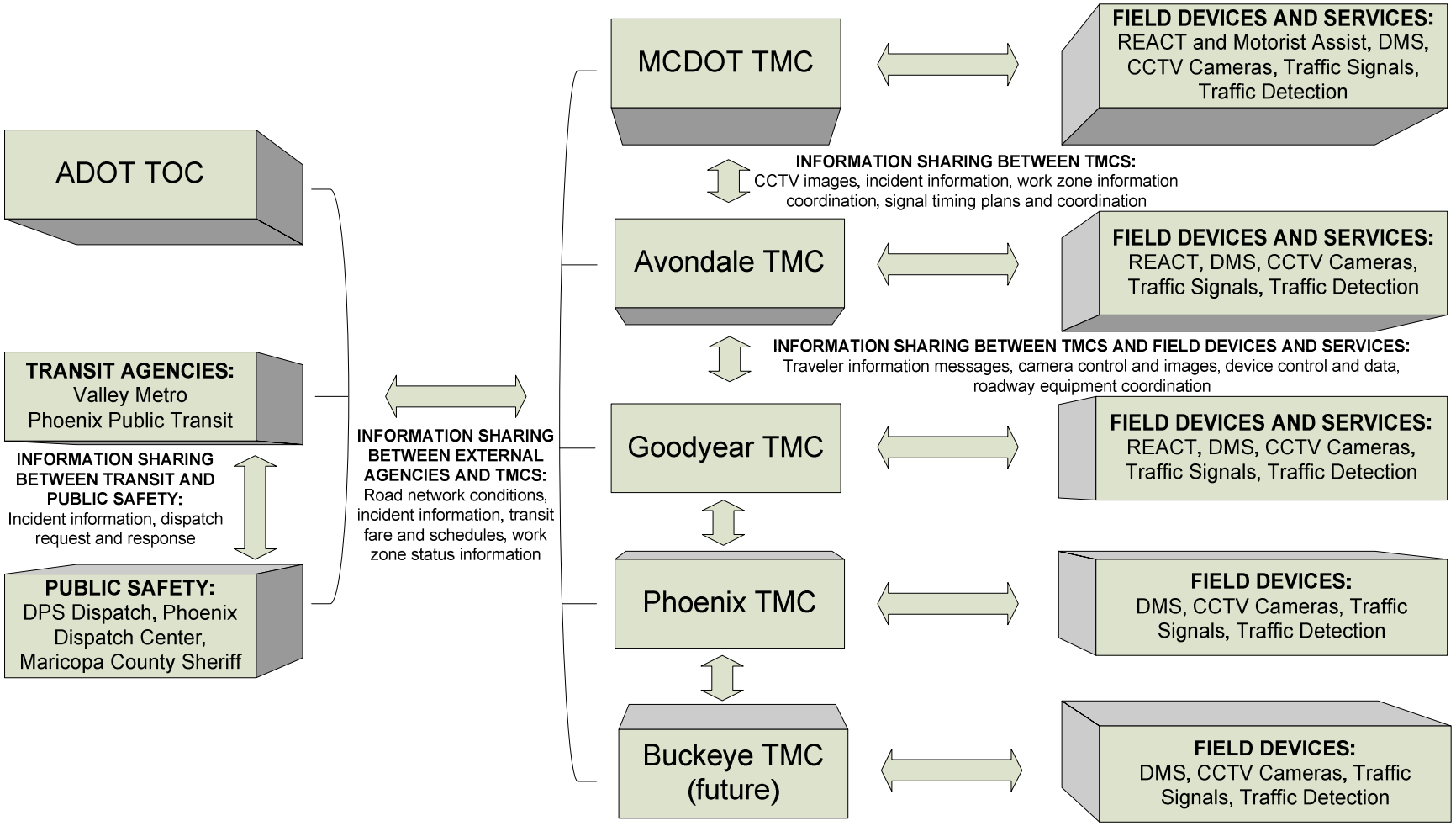

Figure 9 – Arterial Management Concept Diagram

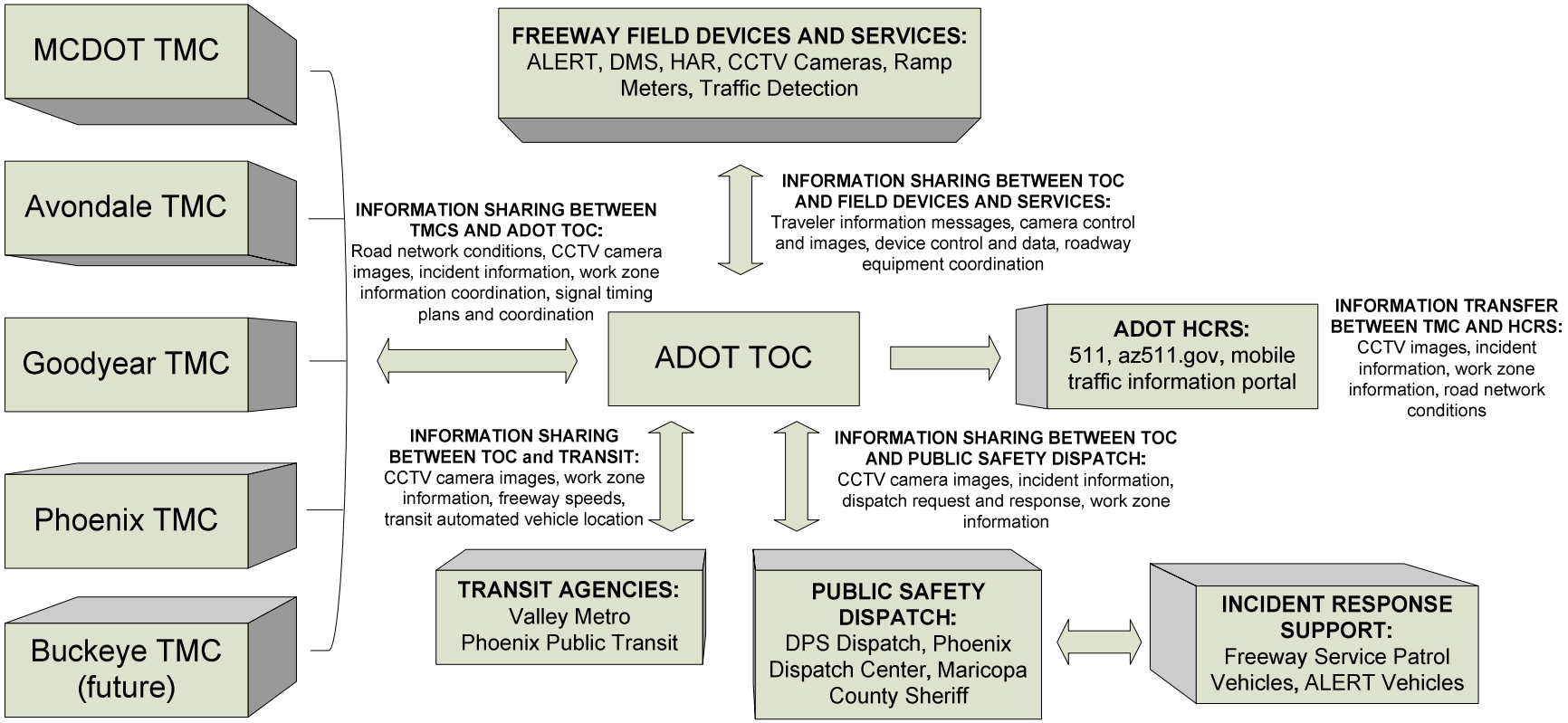

Figure 10 – Freeway Management Concept Diagram

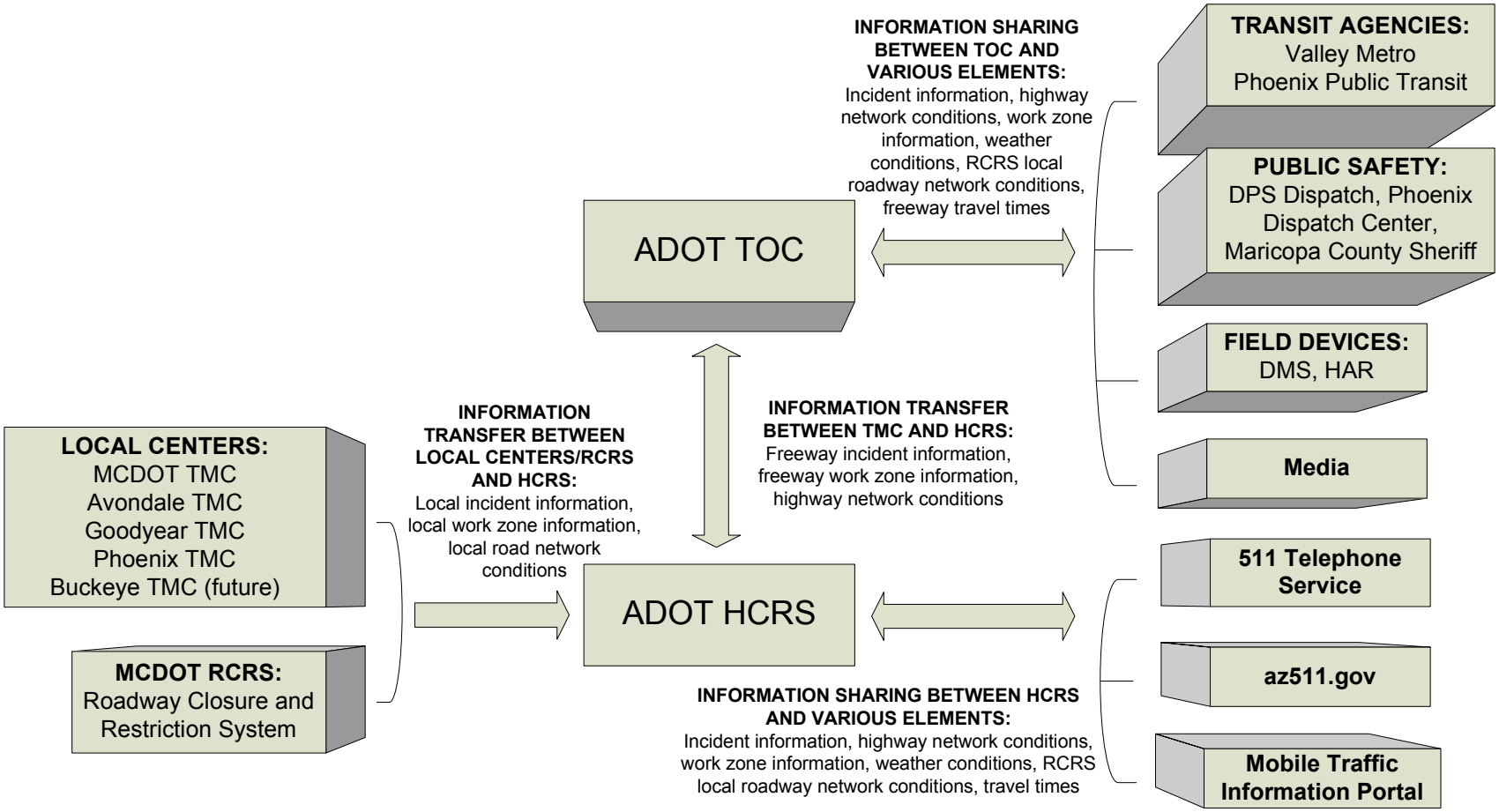

Figure 11 – Traveler Information Concept Diagram

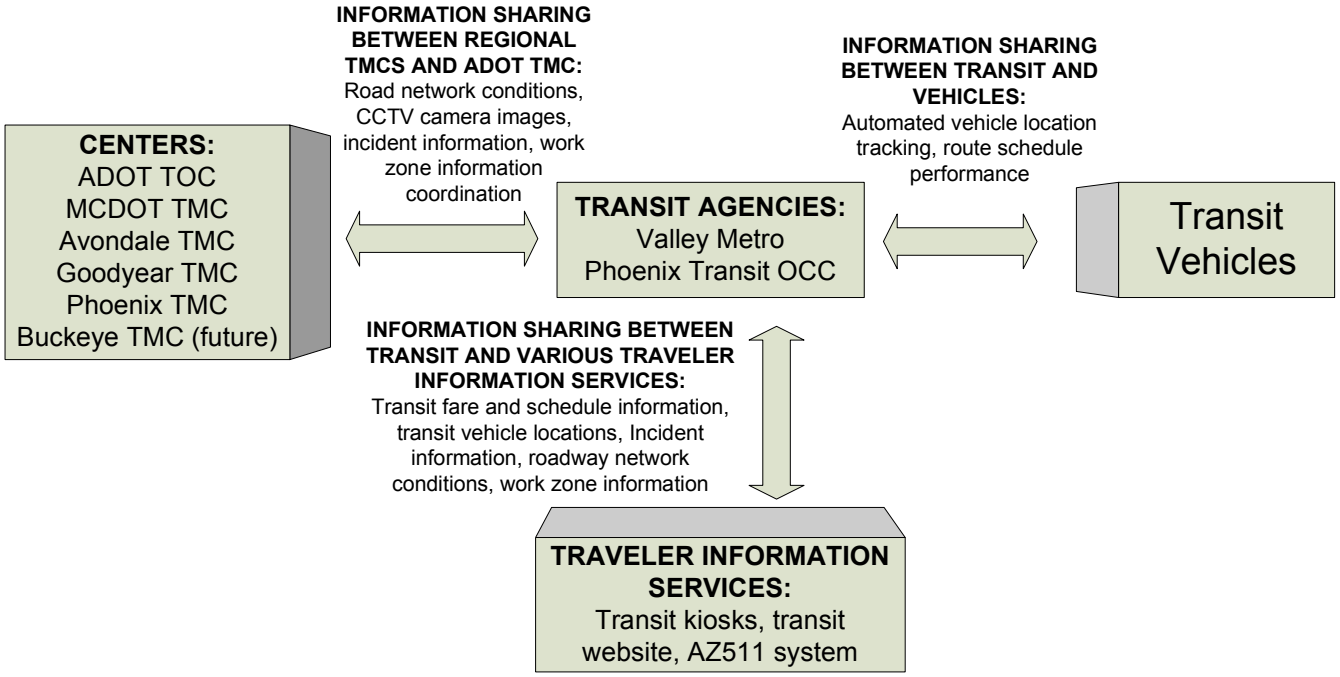

Figure 12 – Transit Management Concept Diagram

4.4 Implementation

4.4.1 Methodology

Using the strategies developed for the ITS-OTMC Federal Grant application, each strategy that included the integration or deployment of ITS technologies was mapped to a specific market package. The list of market packages produced from that effort will be used to implement ITS technologies to satisfy the needs of the corridor area. In an effort to guide stakeholders in allocating resources including staff, funding, projects, and other items, it becomes important to prioritize these market packages to provide a timeline for implementation.

Prioritization of market packages reflects not only the level of urgency associated with addressing each need, but also considers the reasonable timeframe for deploying ITS solutions, based on realistic timeframes and key system sequencing dependencies such as funding availability or existing infrastructure integration. While low priority market packages might provide important user benefits in the near term timeframe, the level of investment required for implementation could be relatively high, thereby requiring that it be accomplished over a longer period of time. These issues that are associated with prioritizing the ITS services envisioned for the MAG ICMS corridor area need to be considered in order to provide the most effective strategy for ITS deployment for all stakeholders.

4.4.2 Applicable ITS Standards

Standards are an important tool in the implementation of an ITS architecture. Standards will allow efficient implementation of the elements in the MAG ICMS ITS Architecture over time. Standards facilitate the deployment of systems that are able to operate together at local, regional, and national levels without impeding innovation as technology advances, vendors change, and as new approaches to ITS evolve. The USDOT's ITS Joint Program Office is supporting Standards Development Organizations (SDOs) with an extensive, multi-year program of accelerated, consensus-based standards development to facilitate successful ITS deployment in the United States. **Table 24** identifies each of the ITS standards that could apply to the MAG ICMS ITS Architecture.

Table 24 – Applicable ITS Standards

SDO	Group/Doc ID	Title	Group
AASHTO/ ITE/NEMA	NTCIP C2C	NTCIP Center-to-Center Standards Group	Group
	NTCIP C2F	NTCIP Center-to-Field Standards Group	Group
	NTCIP 1201	Global Object Definitions	Message/Data
	NTCIP 1202	Object Definitions for Actuated Traffic Signal Controller Units	Message/Data
	NTCIP 1203	Object Definitions for Dynamic Message Signs (DMS)	Message/Data
	NTCIP 1205	Object Definitions for Closed Circuit Television (CCTV Camera Control	Message/Data
	NTCIP 1206	Object Definitions for Data Collection and Monitoring (DCM) Devices	Message/Data
	NTCIP 1208	Object Definitions for Closed Circuit Television (CCTV) Switching	Message/Data
	NTCIP 1209	Data Element Definitions for Transportation Sensor Systems (TSS)	Message/Data
	NTCIP 1210	Field Management Stations – Part 1: Object Definitions for Signal System Masters	Message/Data
	NTCIP 1211	Object Definitions for Signal Control and Prioritization	Message/Data
	NTCIP 1401	TCIP Common Public Transportation (CPT) Objects	Message/Data
	NTCIP 1402	TCIP Incident Management (IM) Objects	Message/Data
	NTCIP 1403	TCIP Passenger Information (PI) Objects	Message/Data
	NTCIP 1404	TCIP Scheduling/Runcutting (SCH) Objects	Message/Data
	NTCIP 1405	TCIP Spatial Representation (SP) Objects	Message/Data
	NTCIP 1406	TCIP On-Board (OB) Objects	Message/Data
	NTCIP 1407	TCIP Control Center (CC) Objects	Message/Data
	NTCIP 1408	TCIP Fare Collection (FC) Business Area Objects	Message/Data
	NTCIP 9010	XML in ITS Center-to-Center Communications	Message/Data
ASTM	DRC 915MHz	Dedicated Short Range Communication at 915 MHz Standards Group	Group
IEEE	IEEE IM	Incident Management Standards Group	Group
	IEEE Std 1455-1999	Standard for Message Sets for Vehicle/Roadside Communications	Message/Data
ITE	ITE TM 1.03	Standard for Functional Level Traffic Management Data Dictionary (TMDD)	Message/Data
	ITE TM 2.01	Message Sets for External TMC Communication (MC/ETMCC)	Message/Data
SAE	ATIS General Use	Advanced Traveler Information Systems (ATIS) General Use Standards Group	Group
	ATIS Low Bandwidth	Advanced Traveler Information Systems (ATIS) Bandwidth Limited Standards Group	Group
	SAE J2630	Converting ATIS Message Standards from ASN.1 to XML	Message/Data
SAE/IEEE	DSRC 5GHz	Dedicated Short Range Communication at 5.9 GHz Standards Group	Group

5. INSTITUTIONAL, TECHNICAL, OPERATIONAL, AND FINANCIAL ISSUES

5.1 Introduction

Previous tasks for the I-10 ICMS Concept of Operations have developed Integrated Corridor Management goals, established an inventory of existing and planned infrastructure to support ICMS, and identified key operational strategies. In addition, a project-level architecture was developed that defined desired connectivity among existing and future systems within the corridor.

While stakeholders agree there is a strong need to be able to manage and integrate networks within this corridor to optimize operations, safety, and mobility, partner agencies also recognize there are many challenges for ICMS implementation. The success of the ICMS project depends on the support from the stakeholders and the necessary modifications on practicing operations as well as the reliability of the adopted technologies. It is important to find out and address the potential institutional, technical, operational and financial issues earlier in ICMS project planning stage than later in the implementation or maintenance stage when the issues are much more difficult to deal with.

As part of this I-10 ICMS Concept of Operations, potential issues, potential issues are being documented and considered. These issues span the following four focus areas:

- **Institutional** issues are part of an on-going process of coordination and collaboration between I-10 Corridor stakeholders. The coordination and collaboration will facilitate the required institutional framework to support the management, operation, and administration of ICMS for the I-10 Corridor.
- **Operational** issues are practice-related issues that must be resolved prior to system implementation to ensure that the proposed ICMS will be adopted consistently and ultimately improve the overall I-10 Corridor performance. In some cases, operational issues may refer to procedures that partners need to agree on to optimize the network within the corridor. Other operational issues may address specific modes or networks within the corridor, or stakeholder groups.
- **Technical** issues are known and foreseen issues relating to technology – what is deployed, how to effectively utilize it, challenges with coordinating systems across jurisdictions, as well as system compatibility.
- **Financial** issues are also an important consideration for the I-10 ICMS Concept of Operations. Any significant enhancements to systems, technologies and operations within the corridor will require a financial commitment.

This chapter of the I-10 ICMS Concept of Operations identifies some potential issues for integrated corridor management, as well as documents if or how some of these issues can be addressed.

Issues documented within this chapter of the Concept of Operations reflect known or anticipated issues as of this writing. It is important to note that issues are likely to shift and change over time. The I-10 corridor reconstruction will have a significant impact on operations throughout the corridor in the very near-term. Taking a longer-term view, continued deployment of ITS

infrastructure among agencies in the corridor as well as capacity enhancements on the freeway and on key arterials will elevate the capability of agencies to effectively implement integrated strategies.

5.2 Methodology and Rationale

Rather than present a 'laundry list' of issues within the various categories, potential issues were assessed in terms of their status, impact on implementation of ICMS strategies, potential to be addressed in the near term or as a future consideration.

Generally, issues fell in to one of the following categories:

- Issues that represent 'realities' that could pose constraints to ICMS strategies and integrated operations
- Issues that represent obstacles, but may be able to be solved, addressed, or worked around

Tables 25 through 28 begin to make a distinction between 'hard facts and realities' and those issues that could potentially be addressed through collaborative planning and operations. Icons have been assigned to each of the different classifications:

"Accepted Facts and Realities"

These issues are identified facts and realities, often difficult to alter or work around. Stakeholders will need to accept them as a constraint of the I-10 Corridor ICMS project.

"Obstacles in ICMS Strategies"

These are existing and foreseen obstacles that may require comprehensive and on-going plans, including modifications of developed strategies, to overcome in order to ensure the continuous progression of implementing ICMS strategies and the ultimate performance objective of I-10 Corridor ICMS project.

"Short-Term Tasks"

These represent the needs and tasks within the context of I-10 Corridor ICMS that can potentially be addressed and tackled in a relatively short time frame. With the existing conditions, a "Short-Term Tasks" project can be initiated as a part of a larger and much more long-term initiative without or with little resolutions in the identified "Obstacles in ICMS Strategies".

"Long-Term Projects"

These represent the objectives and required projects that will achieve the optimal I-10 Corridor and leverage the full potential of proposed ICMS strategies. "Long-Term Projects" require a long time horizon, and often contain several dependencies that must be addressed first.

Table 25 – ICMS Institutional Issues

• The Regional Transportation Plan identifies capacity enhancements as higher funding priority than transit in West Valley communities. The nature of this plan makes it difficult to shift funds or allocate additional money for potential transit projects • There are currently multiple truck stops along I-10, who may seriously oppose strategies that divert trucks away from their businesses • There is a near-term gap for transit in the corridor. Without adequate HOV lanes and park and ride facilities, it may be challenging for the additions and/or enhancements of transit services to promote mode-shift to I-10 commuters • Getting support for operations can be a challenge. Integrated corridor strategies may not be as tangible to decision makers as other improvements.	• Several demand management strategies require active participation from private sector (major employers) • Key stakeholders still need to be involved, particularly freight and public safety • Agencies such as City of Tolleson, which has several warehouses that generate heavy truck volume, have not been involved in the development of ICMS • ICMS requires active champions to implement administrative framework and interagency processes to support ICMS • Jurisdictional responsibilities between cities, Maricopa County, and ADOT are blurred when an incident or construction occurs at a boundary • Major regional outreach and education programs is generally led by Valley Metro, ADOT and MAG	• Need clearly-defined "project priorities" for key ICMS strategies – focus on freeway and arterial coordination, work zone management and coordination, multi-modal traveler information, and promoting awareness among travelers of available resources and mode options • Begin developing operational agreements among agencies for corridor operations and information • Foster closer coordination for multi-modal planning to elevate the priority of transit strategies, and begin setting the stage for integrating Light Rail Transit into the ICMS development • Establish group of agency PIOs to focus on West Valley transportation – include transit, ADOT, County, Cities and Public Safety PIOs • Momentum for ICMS needs to be maintained and carried forward – continue with ICMS working group	• Need formal and detailed mutual agreements that identify and distribute roles and responsibilities (e.g., lead, support roles) for all ICMS activities • Need to integrate ICMS priorities into the regional planning and programming processes

Table 26 – ICMS Technical Issues

• FMS is not fully deployed in the I-10 corridor, and there are no near-term programmed FMS expansion along this segment of I-10 • Arterial management systems are not fully deployed. MCDOT is expanding its systems along MC 85, and Avondale and Goodyear continue to build out their arterial ITS systems • Agencies have limited arterial monitoring capability • High-degree of complexity in establishing ID-coded bus stops for the purpose of disseminating real-time bus arrival time to the public	• Lack of communication infrastructure to signals limits the ability of agencies to coordinate signal operations on corridors and across jurisdictional boundaries • The proposed communication subsystem alternative, such as leased line, may not provide adequate reliability and capacity for ICMS data and video distribution, • Lack of a real-time decision support framework and platform limits ability to respond in real-time to changing corridor conditions • Center to center communications in the corridor is dependent on establishing city operations centers and identifying funding to build out the RCN network	• Prior to deployments of strategies, may require a comprehensive evaluation on "data accuracy" of the all ICMS application data such as the transit AVL data • Need a detailed outline of stakeholders and associated responsibilities for ICMS data archiving/access for performance monitoring and future analyses • Coordinate deployments among partner agencies to be able to identify areas where compatibility is critical (shared CCTV viewing, signal timing plan viewing, etc.) • Explore opportunities for incremental deployment – demonstrate 'proof of concept' on single arterial to plan for broader deployment	• May need to establish a central ICMS information clearinghouse available to all I-10 Corridor stakeholders with a single graphical representation and common geo-referencing • Need a secure backup/disaster recovery plan to respond to ICMS system failure • Need direct control, visibility and updates to ICMS network operational parameters (signal timing, transit schedule and ramp metering rate)

Table 27 – Operational Issues

• ICMS needs to address North-South traffic demand. Population growth, an increase in job market demand could have a significant impact on the travel patterns in the West Valley • Some local arterial roads present a challenge in utilizing them as viable by-passes for I-10 because the local communities want to keep them as pedestrian-friendly arterial roads • Rail/freight volumes in the corridor will likely increase. Rail operations pose significant challenges to arterial operations within the corridor. • Current design of arterial facilities may not be well suited for maneuvering freight/CVO vehicles	• Long-term transportation plan has to be more responsive and flexible in addressing the dynamic nature of I-10 corridor • Data and other information that could be shared between agencies (e.g. transit AVL data and freeway travel time) are not shared at the present time • Need common policies for incident response and reporting • At present, there is limited arterial information available via 511 or az511.gov. HCRS has been expanded to provide for arterial information, but requires local agencies to enter data about incidents, planned closures and work zones on key arterials. • Multiple traveler information outlets may provide conflicting or inconsistent information • Limited performance monitoring capability within the corridor	• Need focused outreach and information dissemination to freight and CVO to alert them to congestion and restrictions • Alternate route plan: How to coordinate among ADOT, cities and public safety agencies to develop effective detour and route plans • Need to develop a model to predict the network-wide impacts of the proposed ICMS strategies collectively under various scenarios. • Periodically review and update model to identify areas where new strategies may be needed • Need to develop a set of comprehensive operational response plans for numerous scenarios and events in I-10 corridor, which may include location(s) of event, severity and impact, responding strategies, contact personnel and device locations • Explore opportunities for alternative data collection strategies – perhaps private sector, non-infrastructure based	• For “shared control” strategy of ICMS system devices, stakeholders need resolution of multiple (and conflicting) requests for the same ITS device • For “shared control” strategy, there is a need for procedures and protocols for the shared use of resources and/or shared control of ITS devices • Develop design standards that are more conducive to freight movement, particularly for arterials

Table 28 – ICMS Financial and Funding Issues

• Current funding levels in the region will not provide for adequate funds for the 'full picture' of ICMS deployment and implementation in the I-10 corridor • Current constraints with the Regional Transportation Plan limit how much transit service can be expanded in the I-10 corridor • Federal congestion management grant funding is not a feasible scenario for near-term enhancements	• Programmed projects at the local and regional level will help establish foundation systems, but timing of additional infrastructure needs to be carefully coordinated to maximize ICMS potential.	• Accelerate FMS deployment within the corridor. Growth and demand within this corridor, as well as the prominence of I-10 as a significant freight/goods movement corridor, could help elevate the priority of FMS infrastructure • If grant funding is not feasible, stakeholders need to take steps to coordinate with Arizona political leaders to lobby for funding in the next federal transportation legislation (2009) • Identify ways to elevate funding priority in the regional funding and programming processes (such as TSOP, close out funds, and others). • Plan for addressing infrastructure needs on priority corridors should be incorporated into regional funding and programming process, and corridor agency strategic planning processes • Explore public/private partnerships to be able to implement enhancements (i.e., park and ride facilities	• Include ICMS priorities as part of next Regional Transportation Plan and as part of the annual TIP programming.

6. I-10 ICMS OPERATIONS GUIDELINES AND PROCEDURES

6.1 Introduction

System operators within a metropolitan region are most likely to achieve measurable improvement in the safety, efficiency, and quality of service that customers experience in their day-to-day use of a regional transportation system when they work together to develop strategies and tactics. The successful conception, development, implementation, and execution of these regional strategies and tactics may be used to achieve a new level of interjurisdictional/interagency functionality in the transportation system. Collaboration should be that of combining the knowledge, expertise, and information of many agencies across jurisdictions to produce and operate an efficient regional transportation system. The operational procedures provided in this document outline the collaboration and communication involved during various scenarios that utilize multiple agency operations.

Building on existing relationships, agencies and jurisdictions within the region can use a common framework for setting expectations, managing resources, sustaining relationships, and establishing responsibilities. The combination of knowledge, expertise, and information that results when agencies successfully collaborate offers the following advantages:

- Well-developed relationships among key agencies and jurisdictions;
- A shared vision among operators and public safety providers for regional transportation system performance;
- A regional approach to corridor operations;
- Information sharing on a regular basis; and
- Integration of regional systems and organizational processes.

Regional operations collaboration and coordination is an ongoing, iterative effort. By concentrating on issues that cross agency and jurisdictional boundaries, operators and service providers work together to improve the services they provide. Collaboration often initially occurs due to a specific need or problem of regional significance such as special event planning, major reconstruction, a natural disaster, or a hazardous material incident. Having addressed the problem, regions may recognize the value of regional collaboration for improving performance (better working relationships and procedures, improved communications, reduced delays). With the application of new technology and better information-sharing procedures, collaboration and coordination can lead to an integrated regional transportation system where agencies routinely work together to make the region's transportation system work better for all customers—travelers, businesses, commuters, public safety agencies and many others.

The operational guidelines contained in this chapter are intended to serve as a framework for multi-agency coordination. Limited ITS infrastructure, limited communications capabilities and ongoing build-out of arterial traffic management systems will not enable a significant amount of automated communications and coordination. As the ITS and communications infrastructure within the I-10 corridor expands, these guidelines should be reviewed and updated to reflect more automated operational procedures and processes.

6.2 Operational Scenarios

This chapter provides examples of representative scenarios for the I-10 corridor, identifying how the integrated corridor management approaches and the various agencies affected will operate and respond during various scenario conditions. Operational scenarios and procedures addressed in this document include the following:

- Normal Daily (AM peak/PM peak/Off peak);
- Incident (major freeway and major arterial);
- Work Zone (freeway construction and arterial construction); and
- Special Event Management (major event affecting more than one jurisdiction).

Each example scenario and the overall response is briefly described and a summary table is provided. This summary identifies the specific ICMS strategies to be deployed and other operational details, as well as the respective roles and responsibilities for the agencies involved in the ICMS during the scenario. It is emphasized that while this section focuses on ICMS strategies and the supporting technologies and system automation, integrated corridor management will always require some degree of "manual" communications between centers (phone, radio) and interaction between stakeholders (collaborative meetings between agencies). **Generally, the agency whose jurisdiction a planned event (work zone) or incident occurs will have the majority of responsibility for initiating traffic management and control strategies.** Other agencies adjust operations and control of the devices and roadways in their jurisdiction to support the lead agency in the response, as well as in accordance with any pre-planned operational procedures that have been developed and agreed to by partners in the corridor. Because of the limited ITS infrastructure in the corridor, the majority of the ICMS operational guidelines within these scenarios emphasize increased coordination among agencies to be able to effectively respond to changing conditions. As ITS infrastructure is more broadly deployed on the freeway and arterial networks, a higher degree of automated coordination will be possible. Some of the potential ICMS-based operations procedures are also identified within each scenario.

The approach to describing the operational concept of the ICMS is to present specific example scenarios that describe and define the stakeholders' general role in providing the services, as well as how technology and enhanced communication among key centers and systems facilitates providing the services. Operational scenarios will give a general sense of regional communication involved in events such as a traffic incident or construction. The roles and responsibilities of the agencies will change depending on the conditions and extent of impact of the scenario. The scenarios outlined in this chapter are simply one example of the type of incident or event that could occur in order to offer a users' view of the services that the ITS equipment and established communication links will provide. Except for the Typical Daily Operations scenario, the first agency that is listed in each scenario table has having operations/activities responsibilities within that scenario are identified as the "host agency" which will initiate the response to each scenario and generally oversee operations of the scenario. Those agencies that are designated as the "host agency" will have different roles and responsibilities within the scenario that than other agencies.

Table 29 identifies the types of strategies that are used during various scenarios such as normal day-to-day, major incident, construction, and planned special event operations in each of the functional categories important to effective agency collaboration and coordination.

Table 29 – Various Scenario Example Strategies

Category	Example Strategies
Traffic Management and Control	
Freeway management	Ramp closures/metering Ramp metering timing and coordination Permanent and portable freeway DMS Freeway/arterial coordination
Arterial management	Traffic signal timing and coordination Road closures Emergency vehicle preemption Permanent and portable arterial DMS Freeway/arterial coordination
Transit management	Public transit service expansion Modifications to bus routes/schedules Park and ride surveillance Manage transit fares/parking fees
Traveler Information	
En-route traveler information	Arterial DMS (temporary and permanent) Freeway DMS (temporary and permanent) Cell phone/511 Future HAR Media
Pre-trip traveler information	511 az511.com Transit Kiosks Private sector real-time traffic information Media (radio and television broadcasts)
Shared Information and Resources	
Incident response	Roving motorist service patrols on freeway and arterial networks Dispatched incident response vehicles on freeway and arterial networks Permanent and portable freeway and arterial DMS
Traffic surveillance	Permanent freeway and arterial CCTV systems Field observations Media reports Portable traffic management systems with DMS and CCTV Aerial surveillance (note – proximity of air operations at Sky Harbor may be an issue with this option)
Information systems	Incident status reports Maintenance and construction activities Special event schedule coordination Sharing of information with local transportation and transit agencies

6.3 Operational Guidelines for Typical Daily Operations

Day-to-day or recurring operations generally refer to managing repeated congestion that occurs due to peak period volumes exceeding the available capacity of the roadway(s). This scenario in 6.3.2 addresses corridor management activities and strategies in response to "typical" day-to-day transportation flows and recurring congestion during AM-peak, PM-peak, and off-peak periods. During this scenario, no accidents (roadway, transit or arterial), road maintenance, weather events, or other non-routine events impacting the networks and requiring an active response are affecting normal daily travel. The benefits of taking a corridorwide view of daily operations coordination include maximizing system performance and effectively minimizing the overall effect of congestion-causing factors on the transportation system within that corridor. Priority goals and objectives for normal daily management are to improve traveler safety, minimize traveler congestion and improve travel reliability. This section will discuss the identification of the types of day-to-day challenges encountered in the I-10 corridor and how to implement ICM strategies for dealing with them effectively.

6.3.1 Operational Strategies

Examples of strategies that individual agencies in the I-10 ICMS corridor could employ to improve normal daily corridor operation include:

- Coordinated traffic signal timing across jurisdictions;
- Coordination of ramp metering and traffic signal timing between freeway and arterial agencies;
- Provision of transit priority across jurisdictional boundaries;
- Sharing CCTV camera video images between transportation, transit and public safety agencies for more comprehensive monitoring; and
- Implement HCRS upgrades that allow local agencies to update the system with information regarding the main arterial roadways that support a majority of the traveling public on the arterial networks in the I-10 corridor to enhance daily reporting and information gathering of road condition information for all agencies.

Shared resources represent one of the potential major benefits of coordinated operations. Through shared resources, the collaborating agencies can obtain more information and make available more information than they can individually. Because normal daily congestion frequently has the largest ongoing impact on operations, shared resources is beneficial to all agencies on a daily basis.

6.3.2 Normal Daily Agency Operations

Coordination of day-to-day operations within a corridor to effectively manage congestion employs an integrated approach to operations that promotes the sharing of information and strategies to work together for the most efficient operations. Each stakeholder agency during normal daily operations monitors and operates their respective systems in accordance with their network-specific operational procedures. **Table 30** outlines the

agency operations in normal day-to-day scenario, as well as identifying what function or activities would be different or enhanced as a result of ICMS implementation.

Table 30 – Normal Daily Operations by Agency

Agency/Entity	Typical Agency Operations/Activities	Future Operations/Activities under ICMS
ADOT	Monitor freeway sensors and CCTV on instrumented segments and share CCTV video feeds with MCDOT through established connection. Monitor/operate ramp meters, and implement adaptive strategies through traffic detection to coordinate with peak travel times and directions (AM – eastbound, PM – westbound). Monitor/operate permanent DMS, provide freeway travel times for AM eastbound and PM westbound, provide advanced notice of construction or planned closures. Dispatch ALERT vehicles for assistance. Update HCRS for traveler information on 511/az511.gov, monitor 511 systems for information being presented to travelers. Make freeway video and freeway detector data available to arterial and transit agencies to support their operations. Monitor DPS CAD for potential incidents on the I-10 freeway or connecting freeways that could impact I-10. Provide updates to cities, MCDOT, and transit of freeway traffic conditions. Communicate with local arterial management and public safety dispatch along corridor for potential incidents on the surrounding arterial network that could impact I-10. Coordinate between ADOT Public Information/Communications and Community Partnerships staff and other agency PIO staff to be sure information being provided to travelers is accurate and consistent. Collect road weather information and post urgent information on HCRS and traveler information services (511, az511.gov).	Monitor/operate portable DMS, provide freeway travel times for AM eastbound and PM westbound on permanent and portable DMS, provide advanced notice of construction or planned closures. Provide video feed of CCTV on freeways to DPS for more coordinated incident response. Monitor/operate HAR when deployed within reasonable proximity to corridor to share traveler information with travelers approaching the corridor. Monitor/operate temporary ramp meters with adaptive strategies through traffic detection to coordinate with peak travel times and directions. Monitor and operate additional permanent ramp meters when deployed.

Table 30 – Normal Daily Operations by Agency (continued)

Agency/Entity	Typical Agency Operations/Activities	Future Operations/Activities under ICMS
MCDOT	Monitor MCDOT traffic sensors. Monitor arterial and freeway CCTV video feeds. Monitor signal operations/adjust signal timing. Notify other arterial management agencies of changes in signal timing that could impact other corridors. Dispatch REACT vehicles, and notify cities of REACT responses within their jurisdiction, including impacted roadways, intersections. Provide updates to cities, ADOT, and transit of arterial traffic conditions. Exchange travel conditions information with ADOT and cities, including data entry to HCRS through center-to-center communications.	Monitor/operate DMS, including joint operations of arterial DMS among West Valley arterial management agencies. Modify integrated traffic signals along corridors that cross jurisdictions to automatically change timing plans along the entire corridor in response to an incident, which then notifies the owning-agencies of those traffic signals that were modified. Operate arterial motorist assist vehicle program in local cities to respond to minor traffic delays.
City of Avondale, Buckeye, Goodyear, and Phoenix	Monitor traffic sensors where deployed. Monitor arterial CCTV where deployed. Monitor signal operations/adjust signal timing. Notify other arterial management agencies of changes in signal timing that could impact other corridors. Coordinate arterial signal timing changes based on freeway traffic congestion patterns. City of Phoenix to monitor/operate DMS where deployed. Local agencies to operate traffic operations/management centers (where deployed).	Exchange road and traffic conditions information between cities, and with ADOT and MCDOT. Update HCRS to include incident or planned construction information for major arterials. Integrate and monitor new devices (sensors, CCTV, traffic signals) where deployed. Monitor/operate DMS where deployed. Work with partner agencies for joint operations/shared use.
DPS	Operate freeway service patrol. Respond as needed to requests for service or emergencies on the freeways. Continue to provide CAD data to ADOT/MCDOT for inclusion on traveler information tools (511, az511.gov).	Provide incident information to transit agencies. Coordinate with local public safety dispatch along corridor for potential incidents on the surrounding arterial network that could impact I-10.
Local public safety dispatch	Sharing of information with local cities, DPS, ADOT, and MCDOT.	Coordinate with ADOT for potential incidents on the surrounding arterial network that could affect I-10.

Table 30 – Normal Daily Operations by Agency (continued)

Agency/Entity	Typical Agency Operations/Activities	Future Operations/Activities under ICMS
Phoenix Public Transit/RPTA/ Valley Metro	Monitor bus routes using AVL. Monitor schedule adherence. Notify arterial management agencies if there are any significant delays on arterials. Update Valley Metro web site with schedule changes or service announcements. Monitor park-and-ride lots, including utilizing ADOT CCTV video feeds to view adjacent freeway ramps. Provide transit route and schedule information accessible to public through ADOT traveler information tools (511, az511.gov).	Calculate travel times using GPS devices and AVL software and share travel times with MCDOT and ADOT to provide to other local agencies, and for dissemination to public through traveler information devices. Notify cities and MCDOT with transit incident information. Provide real-time transit vehicle tracking map on web site.

6.3.3 Critical Dependencies

During agency operations of normal daily congestion management, there are some critical dependencies that would affect the efficiency of those operations. The dependencies during this scenario include:

- Deployment and integration of new and existing ITS devices such as cameras, DMS, traffic sensors and ramp meters to be able to monitor entire network. At present, there is limited ITS infrastructure in the I-10 ICMS corridor area, although MCDOT, Avondale and Goodyear have near term plans for additional infrastructure and technologies.
- Establishing city operations centers or workstations to operate, control and monitor network performance. Both Avondale and Goodyear are planning TMCs within the next few years, and MCDOT will be enhancing and expanding their TMC in the near future.
- Establishing the necessary communications and connections for agencies to be able to share information for day-to-day management congestion.

6.4 Operational Guidelines for a Major Incident on I-10

During a major incident along I-10 within the ICMS corridor which requires a freeway closure of the eastbound lanes and re-routing of all traffic onto the arterial network, many different agencies factor into the corridor management activities and strategies that are used to manage the unplanned traffic congestion. For the purposes of illustrating operational activities, this scenario is based around a major incident along I-10 that requires a closure that extends through the evening peak period of traffic requiring that a significant amount of traffic on the freeway be re-routed onto arterial streets.

While it is possible to plan response scenarios and procedures for a variety of incident types and locations, it is not possible to plan when and where they will occur. The process is incident-driven rather than planned-for, and this significantly different aspect of incident management apart from other scenarios in this document warrants more intensive analysis. Freeway incident management

is treated differently from a technology enhancement point of view than an arterial incident management scenario. The prompt detection of an incident, the dissemination of traveler information regarding the incident on surrounding freeways and arterial message signs, and the execution of quick, effective traffic control and emergency response are essential. **Integrated corridor management approaches are most effective when multiple affected agencies can be notified of the incident, make appropriate adjustments to their network timing or operations strategies, notify travelers of the incident and impacts, and help to better balance the increased traffic demand on the arterial network as a result of the freeway closure or restriction.**

Incident management is an area that involves multiple agencies and disciplines, and therefore requires the clear delineation of roles and responsibilities. A unique aspect of incident management is the diverse group of individuals or agencies involved in it. The complexity of this involvement grows in corridor incident management because both the number of agencies engaged and the coordination issues among them increase significantly. The following are the types of individuals and agencies commonly involved in incident management:

- Law enforcement;
- Fire and rescue;
- Emergency medical services (EMS);
- Transportation agencies (freeway, arterial and transit) and their operations and dispatch centers;
- Motorist Assist Patrols and Service Patrols (FSP, ALERT, REACT);
- Towing and recovery service providers;
- Media;
- Information service providers;
- Coroners and medical examiners; and
- Hazardous materials teams.

The impact of major traffic incidents on the movement of traffic along I-10 and within a corridor can be dramatic, causing delays and congestion that overflows onto arterial streets and ramps and even increasing the likelihood of additional crashes. If these alternative routes are not operated effectively for the incident-induced traffic, delays will occur to both detoured and normal traffic movements.

The purpose of this section is to illustrate incident management coordination by applying integrated corridor management strategies. This section will discuss the identification of the types of challenges encountered in the I-10 corridor during a major incident that requires a closure of the freeway and how to implement ICM strategies for dealing with that situation effectively.

6.4.1 Operational Strategies

Examples of strategies that individual agencies in the I-10 ICMS corridor could employ to improve corridor operations during a major incident along I-10 include:

- Notify potentially affected agencies of incidents, areas of impact, and detours that have been implemented onto arterials via center-to-center communications;
- Implement traffic signal timing adjustments;
- Develop alternate route plans utilizing surrounding arterial network for the I-10 corridor;
- Coordinate ramp metering and traffic signal timing between freeway and arterial agencies;
- Share CCTV camera video images of incident between transportation, transit and public safety agencies;
- Update HCRS to enhance daily reporting and information gathering of road condition information for all agencies, and provide pertinent details about incidents and impacted areas;
- Provide traveler information via resources such as 511, az511.gov, DMS, HAR (future) and the media; and
- Deployment of additional freeway service patrol and ALERT vehicles.

6.4.2 Major Incident on I-10 Agency Operations

Coordination of agency operations during an incident that closes a major traffic route such as I-10 requires efficient use of the responsibilities that each agency has within its jurisdiction. As traffic from the freeway is moved to the arterial streets, coordination with the local cities that operate the traffic signal system is needed as well as between jurisdictions when a detour route crosses into new city limits. Alleviating congestion within a corridor involves an expanded view of operations that transcends jurisdictional boundaries or, in some cases, internal agency structures that commonly separate freeway operations from arterial operations. **Table 31** outlines the agency operations during a major incident on I-10.

Table 31 – Major Incident on I-10 Operations by Agency

Agency/Entity	Typical Agency Operations/Activities	Future Operations/Activities under ICMS
ADOT	Initiate freeway traffic management strategies/coordination and take lead role to dispatch freeway incident team to support incident management, clearance, traffic detours, and other on-scene functions. Dispatch ALERT vehicles to scene for emergency traffic management support. Monitor freeway sensors and CCTV cameras. If the incident occurs in a non-instrumented segment of the I-10 corridor, ADOT TOC operators will rely on reports from the response crews and DPS CAD updates. Monitor ramp meters and implement ramp meter timing changes to help balance network demand during the incident. Monitor DPS CAD for updates from officers on scene. Update HCRS which will provide up-to-date information to travelers via 511, az511.gov. HCRS will also make this information available to other agencies in the corridor and private sector data. Notify arterial management agencies of changes in ramp meters or interchange signal operations. ADOT TOC to provide on-scene responders with any known information about arterial closures, construction or restrictions. This will help DPS and local public safety to detour traffic onto an arterial corridor that is not restricted. Monitor/operate DMS messages for information dissemination of incident to travelers in advance of road closure due to incident. For a long-term incident closure or restriction, particularly in the non-instrumented portions of the I-10 corridor, deploy portable DMS to notify motorists of closure or incident delays. Coordinate and share information with MCDOT, cities, transit, and public safety dispatch for cities and DPS, ensuring that all are kept up-to-date on all activities and the potential impact on their respective operations, including media.	Monitor freeway sensors and CCTV cameras both permanent and on portable traffic management systems in area for real-time information on traffic impacts due to incident. Monitor/operate HAR when deployed within reasonable proximity to corridor to share incident information with travelers approaching the corridor. Utilize any portable DMS deployed along freeway during incident and post messages on DMS through direct communications connection or manually entered in field to provide travelers advanced notice of delays due to incident. Use temporary and permanent ramp meters to control the irregular movement of traffic on/off the freeway produced by the incident. Coordinate strategies with local cities which may require a signal timing plan that involves manual entry depending on the need.

Table 31 – Major Incident on I-10 Operations by Agency (continued)

Agency/Entity	Typical Agency Operations/Activities	Future Operations/Activities under ICMS
MCDOT	Coordinate with ADOT regarding local traffic signal and arterial network impacts due to re-routing of freeway traffic onto arterials. Monitor traffic sensors/volumes (where deployed), and adjust signal timing if needed. Monitor arterial and freeway CCTV from the MCDOT TMC. Also monitor private sector data feed. Dispatch REACT vehicles. Obtain information from REACT responders on-scene about arterial traffic and travel conditions. Update HCRS as needed to include any significant impacts on arterials as result of the freeway incident and traffic diversion.	Monitor/operate DMS where deployed and post messages on DMS as needed when traffic congestion from freeway impacts the arterial network. Notify other arterial management agencies of traffic volumes, detours, and known impacts. Coordinate with other arterial agencies on cross-jurisdictional corridors. Modify integrated traffic signals along corridors that cross jurisdictions to automatically change timing plans along the entire corridor in response to an incident.
City of Avondale, Buckeye, Goodyear, and Phoenix	Coordinate with ADOT and MCDOT regarding local traffic signal and arterial network impacts due to re-routing of traffic Notify ADOT TOC of arterials that are restricted due to construction/work zones, or an arterial incident. It will be important for ADOT and DPS to be aware of any restrictions on arterial alternate routes. Exchange traveler information between other cities, and with ADOT and MCDOT. Coordinate arterial signal timing changes based on freeway traffic congestion patterns and known arterial volumes. Notify partner agencies of changes to timing that could impact another jurisdiction.	Monitor traffic sensors/volumes where deployed and arterial CCTV where deployed. Monitor signal operations/adjust signal timing. Monitor/operate DMS where deployed and post messages on DMS as needed when traffic congestion from freeway impacts the arterial network. Provide detour information to motorists on the arterial network. Provide information to MCDOT and ADOT through automated data exchanges from local agency TMCs.
DPS	Provides initial traffic control for incident and manages long term traffic control deployment for freeway closure during an incident. Coordinate with ADOT TOC and local public safety officers in the field to identify any known restrictions or issues on potential arterial alternate routes. Work with local public safety and emergency traffic management. Continue to provide updated CAD information to ADOT TOC for inclusion in HCRS, 511 and az511.gov. Request Freeway Service Patrols, as well as request ADOT TOC for ALERT and MCDOT TMC for REACT to help support emergency traffic management and detours. Sharing of information with local public safety dispatch, ADOT, MCDOT.	Monitor ADOT CCTV video feeds of incident.

Table 31 – Major Incident on I-10 Operations by Agency (continued)

Agency/Entity	Typical Agency Operations/Activities	Future Operations/Activities under ICMS
Local public safety dispatch	Provides traffic control and monitoring of traffic detours onto arterial network. Coordinate with DPS and City TOC/TMCs to provide current information about detours and impacts. Sharing of information with local cities, DPS, ADOT, and MCDOT. Requests REACT to support emergency traffic management on arterials.	
Phoenix Public Transit/RPTA/ Valley Metro	Modify bus routes/schedules based on road closure if the length of the event warrants. Coordinate with transit dispatch to provide updates on traffic conditions, schedule, and delays. Coordinate changes in stop locations with transit dispatch. Monitor bus routes using AVL, and monitor schedule adherence. Post updates on major delays or service disruptions (as a result of the freeway incident) on the Valley Metro web site.	Provide real-time transit vehicle tracking map on web site that shows transit route schedule adherence and delays due to incident. Notify cities and MCDOT with transit incident information through automated connections.

6.4.3 Critical Dependencies

Congestion management during a major incident on I-10 requires many agencies to operate in tandem to achieve optimum traffic management. Critical dependencies that would affect the efficiency of those operations include:

- Initial identification of incident shall be shared with both ADOT and DPS to initiate response and coordination to manage incident;
- ADOT and DPS should coordinate with their respective counterparts on the local level for support in traffic management of the incident. To minimize the impacts of the incident on the overall network, detour strategies need to take into account any closures or restrictions on arterials (i.e., work zones); and
- With no monitoring infrastructure on the I-10 freeway west of Loop 101, and limited arterial detection and monitoring infrastructure, traffic management agencies will be relying on close coordination with responders in the field. Any strategies implemented, changes made to signal coordination or timing, will need to be communicated to other affected agencies. Alternatives for monitoring and surveillance should be explored to provide real-time traffic conditions information.

6.5 Operational Guidelines for an Arterial Incident

During a major incident along an arterial within the ICMS corridor that requires full closure of the roadway and detouring of traffic, the agency that owns the jurisdiction in which the incident

occurred takes the lead role in delegating responsibilities and coordination to manage the incident. Similar to the freeway incident scenario, the impact of an arterial incident affects the daily congestion that occurs within the cities along the I-10 ICMS corridor.

For example purposes, the incident in question has occurred at the intersection of Van Buren Street and Litchfield Road within Goodyear city limits and in close proximity to Avondale city limits. An incident of this nature affects not only the surrounding arterial network feeding that intersection but the freeway on- and off-ramps as well. This major incident requires traffic re-routing extended to the nearest intersections that provide adequate alternate routes for vehicles in each direction of travel toward the incident, regardless of if that next nearest intersection is signalized or unsignalized. Due to the location of the incident blocking a major arterial that feeds the on/off-ramps from Litchfield Road to I-10, coordination with the freeway functions would be necessary. For this scenario, the City of Goodyear would serve as the lead agency, although active coordination with neighboring jurisdictions (including Avondale and ADOT) would be essential.

Arterial incident management is treated differently from a technology enhancement point of view that the freeway incident management scenario. The primary goals for effective arterial incident management are detour information, incident detection and the need for rapid response. The prompt detection of an incident, the determination of its impact on the affected facility and other roadways corridorwide, and the execution of a quick, effective traffic control and emergency response are essential. Also key is coordinated communication among agencies for effective management of traffic. Establishing detours and communicating these to motorists through dynamic or static signage would be an important element to managing an arterial incident in any jurisdiction. Coordinating detour strategies among affected arterial management agencies and local law enforcement is also an integral step, as law enforcement are likely “in the field” directing and implementing detours. The challenge for the I-10 corridor is that there is limited monitoring/surveillance or detection capabilities along arterials. Traffic is already severely backed up by the time traffic management agencies are aware of the problem to begin implementing strategies. Furthermore, limited communications capability to signals on arterials requires law enforcement on-scene to manually override the signal timing.

Incidents will often cause traffic to be diverted off the affected roadway to parallel and other alternate routes. As the frequency, duration, and impact of incidents increase, arterial incident management and coordination between the various local agencies becomes more desirable to reduce delay and increase safety. Typical problems include increased congestion on alternative routes or unnecessary delay when alternative routes are available but not effectively utilized. An important consideration for the I-10 corridor area is the amount of planned arterial construction; it is highly feasible that potential alternate routes may be restricted or limited due to long-term work zones.

This section will discuss the identification of the types of challenges encountered in the I-10 corridor during a major incident that requires a closure of one of the main intersections in the City of Goodyear and how to implement ICMS strategies for dealing with that situation effectively.

6.5.1 Operational Strategies

Examples of strategies that individual agencies in the I-10 ICMS corridor could employ to improve corridor operation during a major incident on an arterial in the corridor include:

- Notify potentially affected agencies of incidents via center-to-center communications;
- Implement traffic signal timing adjustments on and around arterial affected, and coordinate with neighboring jurisdictions;
- Develop alternate route plans utilizing surrounding arterial network and possibly I-10 as detour routes. Monitor accuracy of plans in light of arterial construction and work zone restrictions;
- Establish communications plans among traffic management and law enforcement for incident management and detour procedures;
- Sharing arterial CCTV camera video images (where deployed and available) of incident between transportation, transit and public safety agencies;
- Update HCRS to enhance reporting and information gathering of road condition information for all agencies;
- Provide traveler information about detours via resources such as arterial DMS and the media; and
- Deploy REACT and motorist assist vehicles.

6.5.2 Major Incident on Arterial Agency Operations

Coordination of agency operations is important during an incident that closes a major arterial intersection that not only is a major traffic route between the Cities of Goodyear and Avondale but is in close proximity to a freeway on-ramp. Congestion on an arterial that is near a freeway access point could potentially affect freeway traffic entering onto the arterial network. **Table 32** outlines the agency operations during a major incident on an arterial in the I-10 ICMS corridor. This scenario assumes the incident is located in the City of Goodyear, and as such, Goodyear assumes the lead role for incident management.

Table 32 – Major Incident on Arterial Operations by Agency

Agency/Entity	Typical Agency Operations/Activities	Future Operations/Activities under ICMS
City of Goodyear	Initiate traffic management strategies and coordination and takes lead role in terms of coordinating incident response for traffic control and adjustments to signal operations. Coordinate with law enforcement in the field to implement detours. Notify neighboring jurisdictions, MCDOT and ADOT of detour and impacts as well as media for traveler information dissemination. Implement motorist notification of incident and detour/detour routes. Request REACT support for emergency traffic management and detour. Notify transit of the incident and impacts, as well as any available detour information. Coordinate and share information with MCDOT, ADOT, other cities, transit, and local public safety dispatch for the City of Goodyear, ensuring that all are kept up-to-date on all activities and the potential impact on their respective operations. Notify ADOT TOC to update HCRS with incident details.	Monitor arterial sensors and CCTV cameras where deployed for incident status and traffic signal adjustments based on traffic congestion at surrounding intersections. Monitor preemption devices at traffic signals for emergency vehicles. Monitor/operate arterial DMS where deployed for information dissemination of incident to travelers in advance of intersection closure due to incident. Update HCRS directly with incident information. Implement necessary changes directly to ADOT interchange signals to relieve traffic congestion on arterial network and notify ADOT TOC.
ADOT	Monitor freeway sensors and CCTV cameras (where deployed). Monitor/operate ramp meters making changes when traffic congestion requires. Update HCRS with incident details for traveler information on 511/az511.gov. This would typically apply to major arterials that are included within the HCRS map. Coordinate with the City of Goodyear for interchange signal operations.	Monitor freeway sensors and CCTV cameras both permanent and on portable traffic management systems in area for real-time information on traffic impacts due to incident. Monitor/operate HAR when deployed within reasonable proximity to corridor to share incident information with travelers approaching the corridor. Utilize any portable DMS deployed along freeway during incident and post messages on DMS through direct communications connection or manually entered in field to provide travelers advanced notice of delays due to incident. Use temporary and permanent ramp meters to control the irregular movement of traffic on/off the freeway produced by the incident. Coordinate strategies with local cities which may require a signal timing plan that involves manual entry depending on abnormality of the need.

Table 32 – Major Incident on Arterial Operations by Agency (continued)

Agency/Entity	Typical Agency Operations/Activities	Future Operations/Activities under ICMS
MCDOT	Monitor traffic sensors/volumes and arterial CCTV (where deployed). Monitor Phoenix Fire CAD data feed for updates on incident. Post messages on other jurisdictions' arterial DMS as needed. Monitor signal operations and adjust signal timing if conditions warrant. Dispatch REACT units to support emergency arterial traffic management and traffic re-routing. MDOT TMC to coordinate with REACT units in the field for updates on traffic conditions and incident response. Exchange traveler information with cities and ADOT. Provide support to Goodyear for notifying motorists of incident and detour. Update HCRS to include incident information for major arterials.	Coordinate with Goodyear regarding local traffic signal and arterial network impacts due to re-routing of traffic. Coordinate detour routing (if needed) with Goodyear. Monitor/operate DMS where deployed and post messages alerting travelers of major incident on arterial network. Modify integrated traffic signals along corridors that cross jurisdictions to automatically change timing plans along the entire corridor in response to an incident. Monitor preemption devices at traffic signals for emergency vehicles. Contact and utilize arterial motorist assist vehicles in area in local cities to assist in traffic control response to incidents as needed.
City of Avondale, Buckeye, and Phoenix	Coordinate with Goodyear regarding local traffic signal and arterial network impacts due to re-routing of traffic. Coordinate detour routing with Goodyear, including notifying motorists of impacted routes and detours. Notify law enforcement of incident and detours that are in effect. Exchange traveler information between other cities, and with ADOT and MCDOT.	Monitor/operate DMS where deployed and post messages alerting travelers of major incident on arterial network. Monitor traffic sensors/volumes and arterial CCTV (where deployed). Monitor signal operations and adjust signal timing. Cities are to notify adjacent jurisdictions of changes to timing on cross-jurisdictional corridors. Coordinate arterial signal timing changes based on freeway traffic congestion patterns. Monitor preemption devices at traffic signals for emergency vehicles.
Local public safety dispatch	Provides initial traffic control for incident and monitoring of traffic detours through arterial network. Request REACT traffic response units to provide traffic management and detour support. Coordinate with the City of Goodyear traffic and REACT to establish detour routes that do not re-route traffic onto impacted arterials (i.e., work zones). Communicate with Goodyear traffic operations center, and provide updates from officers in the field.	Coordinate with ADOT regarding an incident on the surrounding arterial network that could impact I-10.

Table 32 – Major Incident on Arterial Operations by Agency (continued)

Agency/Entity	Typical Agency Operations/Activities	Future Operations/Activities under ICMS
DPS	Operate freeway service patrols. Share information with local public safety dispatch for support if needed.	
Phoenix Public Transit/RPTA/ Valley Metro	Modify bus routes/schedules based on intersection closure if the length of the event warrants. Monitor bus routes using AVL and monitor schedule adherence. For significant transit schedule disruptions or delays, post notification on the Valley Metro web site.	Provide real-time transit vehicle tracking map on web site that shows transit route schedule adherence and delays due to incident. Notify cities and MCDOT with transit incident information.

6.5.3 Critical Dependencies

Congestion management during a major incident on an arterial requires many agencies to operate together and the critical dependencies that would affect the efficiency of those operations include:

- Initial identification of incident shall be shared with both the local transportation agency where the incident and occurred and the local public safety dispatch to initiate response and coordination to manage incident;
- The local transportation agency and local public safety dispatch shall coordinate with their respective counterparts on the county and statewide level, MCDOT, ADOT, Maricopa County Sheriff and DPS for support in traffic management of the incident as needed.
- Traveler information and communicating incident impacts and detours to motorists shall be a coordinated effort when incidents occur on major arterials that could impact a neighboring jurisdiction.
- On arterials with local transit service, transit will need to be notified of the incident and any detours implemented.
- With limited monitoring/surveillance capability on arterials within the corridor, it will require close coordination between responders in the field and traffic management staff to be able to implement incident management strategies. Alternatives for arterial data collection should be explored.

6.6 Operational Guidelines for Freeway Construction/Work Zone

It is often the case that a work zone has a ripple effect on transportation within a corridor, particularly when the construction zone is located within high-traffic areas or areas that are subject to extreme morning and evening peak traffic movements. This is definitely the case with the I-10 corridor and the planned reconstruction that will restrict capacity in the corridor for the next two to three years. Arterial construction projects along key city corridors will also restrict capacity on the surrounding transportation network. Arterial construction projects will be

constructed concurrently with the I-10 reconstruction and continue beyond I-10 completion and justifies developing integrated and coordinated agency cooperation.

The impacts of work zones are not always restricted to the work zone itself. These impacts may be felt in the area in advance of the work zone, in other roadway corridors, within the regional transportation network, and on other modes of transportation. For example, within the I-10 ICMS corridor, several major arterials that would serve as parallel east/west alternate routes will also be impacted with work zones, particularly McDowell and Van Buren Roads. For this scenario, the planned freeway reconstruction along I-10 functions as the work zone area that will affect travel along the entire ICMS corridor.

The key to develop a coordinated work zone management strategy in response to the planned I-10 construction is to expand the scope of work zone management from a single project focus to a corridor management view. Priority goals and objectives for work zone management are to maximize worker safety, minimize impacts of work zone on travelers, provide advance notice to motorists about the freeway restrictions, and promote alternate modes for commuters who need to travel the corridor for their day-to-day trips. For this particular corridor, freight and commercial vehicles are a key target audience. Because of the duration and phasing of the work zone activity, different areas within the corridor will likely be impacted at different times. This translates into a strong need for multi-agency coordination throughout the duration of the project so that plans and phasing is clearly communicated to all agencies involved.

For an effective integrated corridor management plan, it is important to understand the potential impact of multiple work zones on each other, especially when one construction project requires multiple phases which impacts new areas of the work zone in different ways. Often individual work zone projects would have modest impact on travelers if it were not for another work zone or phase of construction that either compounds the principal delay or affects alternative routes. Long-term work zones associated with major construction or reconstruction projects requiring months or years to complete warrant the development of more complex and coordinated agency operations. In the case of minor work zone activities (e.g., mobile, short duration, or short-term stationary work zones), providing traveler information, scheduling during off-peak hours, and coordinating work zones activities between agencies may be all that is necessary. More extensive work zone activities necessitate more active traffic management and control as well as more extensive communication and coordination.

Work zone management is an area that involves multiple agencies and disciplines and therefore requires the clear delineation of roles and responsibilities. Construction along I-10 and planned phasing of the work zone will cause delays and congestion that minimizes the throughput of traffic on I-10 but overflows onto arterial streets. This section will discuss the identification of the types of challenges encountered in the I-10 corridor during major construction along I-10 and how to implement ICM strategies for dealing with that situation effectively.

6.6.1 Operational Strategies

Examples of strategies that individual agencies in the I-10 ICMS corridor could employ to improve corridor operation during major construction along I-10 within the corridor include:

- Notify affected agencies regarding work zone activity utilizing center-to-center communications;

- Provide traveler information via resources such as DMS, future HAR and the media;
- Develop alternate route plans utilizing surrounding arterial network for I-10 corridor;
- Coordinate ramp metering and traffic signal timing and implement preset traffic signal timing plans to manage traffic moving from freeway to arterial network;
- Sharing freeway and arterial CCTV camera video images of construction between transportation, transit and public safety agencies;
- Update HCRS with work zone information including phasing time, extent, and delays anticipated; and
- Coordination of DPS, local public safety dispatch, and incident response vehicles to support work zone safety.

6.6.2 Freeway Construction/Work Zone Agency Operations

Construction along I-10 presents operational challenges with traffic movement and safety. In order to maximize the efficiency of the work zone and ultimately reducing the length of time that a construction zone is needed, lane closures, traffic control, or the possible closure of the entire roadway may be utilized. Each strategy for the phasing of construction requires a different coordination of agency operations depending on the amount of freeway traffic that will be diverted to the arterial network. If traffic from the freeway is moved to the arterial streets for a closure of I-10, coordination with the local cities that operate the traffic signal system is the among the important strategies needed as well as coordination between jurisdictions when a detour route crosses into new city limits. For construction phasing that does not require detouring traffic onto arterials, the monitoring of traffic through the work zone on I-10 becomes the main strategy for ICMS. **Table 33** outlines the agency operations during construction along I-10 within the ICMS corridor.

Table 33 – Freeway Construction/Work Zone Operations by Agency

Agency/Entity	Typical Agency Operations/Activities	Future Operations/Activities under ICMS
ADOT	Initiate work zone management strategies/coordination and takes lead role in coordinating with DPS for on-site management/protection of traffic. Provide and dispatch additional ALERT vehicles in the vicinity of the work zone and back up area for assistance in traffic control.	Monitor/operate portable DMS, provide freeway travel times for AM eastbound and PM westbound on permanent and portable DMS, provide advanced notice of construction or planned closures and post messages on DMS through direct communications connection or manually entered in field.

Table 33 – Freeway Construction/Work Zone Operations by Agency (continued)

Agency/Entity	Typical Agency Operations/Activities	Future Operations/Activities under ICMS
ADOT (continued)	Monitor freeway sensors and CCTV cameras, focusing on work zone and back up area. For areas of the freeway that are not instrumented with monitoring and detection, coordinate with the contractor to implement temporary monitoring equipment. Monitor/operate ramp meters making changes when traffic congestion requires. Implement adaptive capabilities on metered entrance ramps. Monitor/operate DMS messages for information dissemination of incident to travelers in advance of work zone identifying lane restrictions and other work zone information. Due to the temporary nature of the work zone and lack of FMS infrastructure west of Loop 101, coordinate with contractor to implement portable DMS to provide advisory messages to travelers. Coordinate with affected cities and MCDOT to be able to place portable DMS on N/S approaches to I-10 warning travelers of I-10 lane restrictions, and advise alternate route. Regular communication between ADOT construction project manager, PIO and affected cities, and transit to review and discuss traffic control plan, changes to the plan, impacted areas, and recommended advisory messages for motorists. Update HCRS with I-10 construction project information. Provide up-to-date info on 511/az511.gov. Obtain CAD incident information from DPS, and update HCRS with any known incidents on I-10. Provide weekly updates to local media (print and broadcast) advising them of closures and restrictions. Promote available information resources (project web page, toll free number and 511/az511.gov). Dispatch ALERT response teams as needed to assist with incidents in work zone; ALERT to coordinate with FSP and REACT for additional support.	Monitor freeway sensors and CCTV cameras both permanent and on portable traffic management systems in area for real-time information on traffic impacts due to work zone. Monitor/operate HAR when deployed within reasonable proximity to corridor to share work zone information with travelers approaching the work zone area. Monitor ramp meters and implement ramp meter timing changes to help balance network demand during the incident. Use temporary and permanent ramp meters to control the irregular movement of traffic on/off the freeway produced by the work zone. Coordinate strategies with local cities which may require a signal timing plan that involves manual entry depending on the need.

Table 33 – Freeway Construction/Work Zone Operations by Agency (continued)

Agency/Entity	Typical Agency Operations/Activities	Future Operations/Activities under ICMS
ADOT (continued)	Notify motorists in advance of major construction activity through portable DMS. Update messages as needed during work zone activities. Coordinate and share information with MCDOT, cities, and public safety dispatch for cities and DPS, ensuring that all are kept up-to-date on all activities and the potential impact on their respective operations.	
MCDOT	Coordinate with ADOT regarding local traffic signal and arterial network impacts due to construction phasing. Monitor traffic sensors/volumes and arterial CCTV (where deployed), and also monitor ADOT CCTV on I-10 (where deployed). Monitor signal operations and adjust signal timing. Notify neighboring agencies of timing changes on cross-jurisdictional corridors. Coordinate with local cities and ADOT for traveler information strategies, including portable DMS placement and operations and HCRS updates. Participate in ADOT project briefing meetings for updates on construction phasing and schedule. Provide PIO contact for public information strategy discussions within the corridor. Update HCRS with planned construction/work zone activity on MCDOT arterials; coordinate these activities with ADOT traffic control plan for I-10. Request REACT to support emergency traffic management on arterials. Update HCRS as needed to include any significant impacts on arterials as result of the freeway work zone and traffic diversion.	Monitor/operate DMS where deployed and post messages alerting travelers of freeway construction along key arterial feeders to freeway. Exchange travel conditions information with ADOT and cities, including data entry to HCRS through center-to-center communications. Modify integrated traffic signals along corridors that cross jurisdictions to automatically change timing plans along the entire corridor in response to the changing traffic conditions on the arterials due to an incident on the freeway, which then notifies the owning-agencies of those traffic signals that were modified. Modify integrated traffic signals along corridors that cross jurisdictions to automatically change timing plans along the entire corridor in response to the need produced by the work zone on the freeway.
City of Avondale, Buckeye, Goodyear, and Phoenix	Coordinate with ADOT regarding local traffic signal and arterial network impacts due to construction phasing and coordinate arterial signal timing changes based on freeway traffic congestion patterns. Monitor traffic sensors/volumes and arterial CCTV (where deployed). Review planned arterial construction activities, and coordinate with ADOT to minimize detours or rerouting on to arterials that are also restricted.	Coordinate with MCDOT and ADOT for traveler information strategies, including portable DMS placement and permanent DMS messages on N/S arterials approaching I-10. Update HCRS with planned construction activity on major arterials; coordinate these activities with ADOT as part of the I-10 traffic control plan. Exchange road and traffic conditions information between cities, and with ADOT and MCDOT.

Table 33 – Freeway Construction/Work Zone Operations by Agency (continued)

Agency/Entity	Typical Agency Operations/Activities	Future Operations/Activities under ICMS
City of Avondale, Buckeye, Goodyear, and Phoenix (continued)	Provide PIO contact for public information strategy discussions within the corridor. Provide ADOT PIO with planned special events that are expected to generate significant traffic volumes. Participate in ADOT project briefing meetings for updates on construction phasing and schedule. Monitor signal operations and adjust signal timing. Notify neighboring agencies of timing changes on cross-jurisdictional corridors. Coordinate with REACT and motorist assist vehicles in the vicinity of the work zone and back up area for assistance in traffic control.	Integrate and monitor new devices (sensors, CCTV, traffic signals) where deployed. Monitor/operate permanent and portable DMS to support traveler information dissemination of work zone notification and status in close proximity to major N/S arterial feeders to the freeway.
DPS	Provide enforcement in construction work zone; lead incident management/response in work zone. Operate Freeway Service Patrol; obtain updated traffic control plan and construction phasing information from ADOT I-10 construction manager and notify FSP dispatch and drivers of closures and restrictions.	Provide CAD data feed to ADOT for incident information. Coordinate with local public safety dispatch along corridor for potential incidents on the I-10 that could impact the surrounding arterial network.
Local public safety dispatch	Monitoring of alternate routes and major arterial feeders to the freeway that could experience increased traffic congestion due to construction. Participate in ADOT project briefing meetings for updates on construction phasing and schedule. Notify arterial traffic management centers of arterial incidents or severe delays on arterials near freeway.	
Phoenix Public Transit/RPTA/ Valley Metro	Modify bus routes/schedules based on planned construction as needed for the freeway RAPID transit routes. Monitor bus routes using AVL. Participate in ADOT project briefing meetings for updates on construction phasing and schedule. Provide PIO contact for public information strategy discussions within the corridor. Update Valley Metro web site with I-10 transit route information and changes to schedules as a result of the I-10 reconstruction. Coordinate with PIOs in the corridor to implement focused outreach campaign to promote commute alternatives.	Provide real-time transit vehicle tracking map on web site that shows transit route schedule adherence and delays due to work zone.

6.6.3 Critical Dependencies

Critical dependencies that would affect the efficiency of the management of construction along I-10 include:

- Notifying all agencies in the area of the work zone plans that could be potentially affected by construction. Regularly scheduled meetings to update partners on phasing, schedule and impacts will be essential. A point of contact within each agency/jurisdiction should be designated to aid in communicating on construction related activities that will impact traffic flow and transit operations;
- Coordination of all agencies strategies for work zone management prior to construction is needed for effective real-time responsive tactics for managing the traffic. Coordinating traffic control and alternate route plans among freeway and arterial traffic management agencies will be an ongoing process throughout the duration of the construction;
- Extensive dissemination of work zone traveler information utilizing HCRS, 511, az511, freeway and arterial DMS, private sector web/wireless outlets, and media shall be required for construction that will have a major impact on traffic capacity along I-10. Advanced warnings should be provided of any planned lane restrictions or closures; and
- A coordinated outreach and awareness campaign will need to be implemented to advise travelers of commute options as a means of easing congestion in the corridor. These include carpooling, using alternate arterials, transit, telecommuting and other strategies.

6.7 Operational Guidelines for Arterial Construction/Work Zones

Similar to the freeway construction scenario, the impact of arterial construction affects the daily congestion that occurs within the cities along the I-10 ICMS corridor. The local agencies that are involved with coordinating arterial construction are primarily the owning-agency in which the construction is in their jurisdiction, local public safety dispatch, and other agencies to support those localized functions. Particularly when construction spans between two cities the coordination of traffic signals, traffic control, detours, lane closures, and transit routes are all necessary to minimize the negative impacts of the construction. With the rapidly growing Southwest Valley, construction will continue to occur along many of the major arterial roadways within the cities along the I-10 ICMS corridor. Arterial work zones along key city corridors will take place during and after the I-10 reconstruction work zones planned for the next two to three years and therefore it is important for agencies to be communicating and coordinating with each other to efficiently manage the work zone and resulting traffic congestion. For this particular scenario, the planned arterial construction on the arterial network will be along McDowell Road spanning the cities of Goodyear and Avondale and will affect travel from/to I-10 along the construction zone and therefore a majority of the ICMS corridor. McDowell Road is a major collector of traffic and also an alternate route to the freeway which will require streamlined local agency coordination. A similar scenario could also be in effect for another major east-west arterial such as Van Buren.

As described in the previous section, long-term work zones associated with major construction requiring months or years to complete warrant the development of more complex and coordinated agency operations. In the case of minor work zone activities by comparison, such as construction

along McDowell Road, providing traveler information and coordinating work zones activities between agencies may be all the agency coordination necessary.

Arterial work zone management involves multiple agencies and disciplines for support and coordination. Within this scenario, construction along McDowell Road is envisioned to cause delays and congestion on the arterial network, which minimizes the throughput of traffic on McDowell Road and the surrounding streets. This section will discuss the identification of the types of challenges encountered in the I-10 corridor during major arterial construction and how to implement ICMS strategies for dealing with that situation effectively.

6.7.1 Operational Strategies

Examples of strategies that individual agencies in the I-10 ICMS corridor could employ to improve corridor operation during construction along McDowell Road within the corridor include:

- Notify affected agencies regarding work zone activity utilizing center-to-center communications. Until full deployment of the center-to-center capability, regular coordination with ADOT and neighboring arterial management agencies will be needed to minimize overlap of construction impacts;
- Provide traveler information to motorists via resources such as arterial DMS, 511, local agency web sites, and the media;
- Develop alternate route plans utilizing surrounding arterial network, and provide signage for motorists that clearly identify alternate or detour routes;
- Implement preset traffic signal timing plans to manage traffic moving from freeway to arterial network;
- Partner with law enforcement to keep them apprised of arterial work zone activities and coordinate with law enforcement to implement detours;
- Sharing arterial CCTV camera video images of construction between transportation, transit and public safety agencies;
- Update HCRS with arterial work zone information including phasing time, extent, and delays anticipated; and
- Coordination of local public safety dispatch and incident response vehicles to support work zone safety.

6.7.2 Arterial Construction/Work Zone Agency Operations

Coordination of agency operations is important during planned construction along a major arterial that is a major traffic route between the Cities of Goodyear and Avondale, as well as in close but proximity to I-10 (which will also be under construction). Congestion on an arterial that is near a freeway access point will affect freeway traffic that entering onto the arterial network or vice versa. Maximizing the efficiency of the work zone and ultimately reducing the length of time that a construction zone is needed will require lane closures, traffic control, or the possible closure of the entire roadway (which would require a detour). These strategies will be utilized through the entire work zone and therefore warrants complete coordination of agency operations during the construction period, as well as extensive pre-construction planning and phasing. For the traffic through the work zone or

detoured away from the work zone, coordination with the local cities that operate the traffic signal system and monitoring of traffic using CCTV cameras and portable traffic management systems is the among the important strategies needed as well as coordination between jurisdictions when a detour route crosses into new city limits. Law enforcement is a key partner with this kind of long-term impact on a major arterial. **Table 34** below outlines the potential agency operations during construction along McDowell Road within the ICMS corridor.

Table 34 – Arterial Construction/Work Zone Operations by Agency

Agency/Entity	Typical Agency Operations/Activities	Future Operations/Activities under ICMS
Cities of Goodyear and Avondale	Initiate work zone management strategies/coordination and take lead role in coordinating with local public safety dispatch for on-site management/protection of traffic. Coordinate with REACT and motorist assist vehicles in the vicinity of the work zone and back up area for assistance in traffic control. Monitor arterial sensors and CCTV cameras (where deployed) from municipal traffic operations centers. Notify and coordinate with neighboring jurisdictions about timing plan changes that could impact traffic within their jurisdiction. Provide updates to partner jurisdictions about work zone phasing and schedule. Notify ADOT construction manager of planned arterial work zone activity. Discuss at I-10 project briefing meetings and notify DPS and local law enforcement of this arterial not being an ideal alternate or diversion route in the event of an incident. Notify transit of planned construction activity and schedule, and coordinate with transit to implement alternate stops or routes. Implement signed detours and provide motorists with information about the work zone activities, impacts or if an alternate route is required. Utilize portable DMS or static signage on the affected roadway. Make arterial construction project information available via city web sites, media and 511. Coordinate and share information with ADOT, MCDOT, other cities, transit agencies and local public safety dispatch for the cities of Goodyear and Avondale, ensuring that all are kept up-to-date on all activities and the potential impact on their respective operations as well as media for traveler information dissemination. Provide weekly updates to local media (print and broadcast) advising them of closures and restrictions.	Monitor and adjust traffic signal timing and coordination based on traffic congestion along construction zone and along parallel and perpendicular routes in close proximity to the construction zone. Monitor/operate arterial permanent and portable DMS messages where deployed for information dissemination of construction status to travelers in advance of the work zone and within the work zone. Update HCRS with planned construction and work zone activity (this will be included on 511 and az511.gov). Implement necessary changes directly to ADOT interchange signals to relieve traffic congestion on arterial network and notify ADOT TOC. Provide automated information updates to law enforcement, ADOT, MCDOT and other affected agencies.

Table 34 – Arterial Construction/Work Zone Operations by Agency (continued)

Agency/Entity	Typical Agency Operations/Activities	Future Operations/Activities under ICMS
ADOT	Monitor freeway sensors and CCTV cameras where deployed. Update HCRS for traveler information on 511/az511.com. Coordinate among the I-10 construction project manager, city traffic and public works, and law enforcement to stay apprised of impacts of multiple construction projects. Traffic control and detour plans should factor in these arterial restrictions.	
MCDOT	Coordinate with ADOT and cities regarding local traffic signal and arterial network impacts due to construction. Monitor traffic sensors/volumes and arterial CCTV where deployed. Monitor and adjust traffic signal timing and coordination based on traffic congestion. Monitor Phoenix Fire CAD data for arterial incident data; provide pertinent incident information to city traffic operations and management centers. Dispatch REACT as requested by cities to assist with incident traffic management and traffic re-routing. Provide support as needed to Goodyear and Avondale to help with motorist information or detour planning.	Notify adjacent cities of changes to signal operations that could affect their jurisdiction. Modify integrated traffic signals along arterial corridors that cross jurisdictions to automatically change timing plans along the entire corridor if necessary. Monitor/operate permanent DMS where deployed and portable DMS where located to post messages alerting travelers of construction on arterial network in neighboring jurisdiction if applicable. Contact and utilize arterial motorist assist vehicles in area in local cities to assist in traffic control response to incidents as needed. Update HCRS to include planned construction information or traffic congestion due to other work zones in area for major arterials.
City of Buckeye and Phoenix	Coordinate with ADOT regarding local traffic signal and arterial network impacts due to construction and coordinate any necessary arterial signal timing changes within their city limits. Monitor signal operations/adjust signal timing. Exchange traveler information between other cities, and with ADOT and MCDOT. Provide support as needed to Goodyear and Avondale to help with motorist information or detour planning. Update HCRS to include planned construction information or traffic congestion due to other work zones in area for major arterials.	Notify adjacent cities and MCDOT of changes to signal operations that could affect their jurisdiction. Monitor/operate permanent DMS where deployed and portable DMS where located to post messages alerting travelers of construction on arterial network in neighboring jurisdiction if applicable.
DPS	Coordination with local public safety dispatch, ADOT, MCDOT for support if needed.	

Table 34 – Arterial Construction/Work Zone Operations by Agency (continued)

Agency/Entity	Typical Agency Operations/Activities	Future Operations/Activities under ICMS
Local public safety dispatch	Provides support and traffic calming for worker safety in construction work zone. Monitoring of roadway and alternative routes that could experience increased traffic congestion due to construction. Sharing of information with local city, DPS, ADOT, and MCDOT. Coordinate regularly with city traffic management for updates on construction schedule, phasing and impacts. Also coordinate for detour planning and monitoring.	Coordinate with ADOT regarding work zone locations and extents on the surrounding arterial network that could impact I-10.
Phoenix Public Transit/RPTA/ Valley Metro	Modify bus routes/schedules based on planned construction as needed for the arterial transit routes. Because construction barricades move during the course of a project, these route modifications will be on-going and will require good communication between the transit providers and ADOT. Coordinate with cities to obtain updated information about construction schedule and phasing. Monitor bus routes using AVL. Monitor schedule adherence. Update Valley Metro web site if there are significant changes or impacts to routes or schedules as a result of construction.	Provide real-time transit vehicle tracking map on web site that shows transit route schedule adherence and delays due to incident.

6.7.3 Critical Dependencies

Critical dependencies that would affect the efficiency of the management of arterial construction along McDowell Road include:

- Notifying all agencies in the area of the work zone plans that could be affected by construction;
- Coordination of all agencies strategies for work zone management prior to construction is needed for effective real-time responsive tactics for managing traffic. For long-term arterial work zones, regular meetings and updates among traffic management, law enforcement and PIOs will be critical; and
- Extensive dissemination of work zone traveler information to motorists utilizing HCRS, 511, az511, freeway and arterial DMS, and media shall be required for work zone activities that will have a major impact on traffic capacity along a key arterial. Private sector traveler information services could also be a valuable partner.

6.8 Operational Guidelines for Special Event Management

Special event management within the I-10 ICMS corridor area has an established, multi-agency process for the Phoenix International Raceway (PIR) events. For several years, MCDOT has led

the effort to develop, refine and implement event traffic management strategies during major NASCAR race weekends at PIR. Special events at PIR represent some of the largest patron-attended events in Phoenix, Arizona. While PIR hosts several events each year, the NASCAR events draw more than 200,000 fans over the three-day race weekend, with more than 100,000 on the day of the main event.

NASCAR and other major races and events at PIR pose several traffic logistics problems for agencies, race patrons who are trying to make their way to the race facilities, as well as residents in the area. Limited freeway and arterial access to the racetrack cause significant congestion and bottlenecks on key routes leading to the facility, and there are few alternate routes for event patrons or nearby residents to use. Incident management during these events also is problematic, primarily during periods of peak congestion.

Each year, key partner agencies work together as part of a PIR Event Management Plan that includes:

- Program Planning;
- Event Operations Planning;
- Implementation Activities;
- Day-of-Event Activities; and
- Post Event Activities.

A Traffic Management Plan was developed by MCDOT in coordination with city and state traffic management agencies; state, county and local law enforcement; as well as PIR event staff. This Plan is reviewed and updated on a regular basis. The Plan indicates how traffic, parking, Park-and-Ride, motorist information, neighborhood access, and pedestrian operations will be managed on the day of the event. Parameters, traffic control plans, incident management, portable DMS signs and placement, and freeway management strategies are determined in advance and with consensus from partners so that there are no questions as to what strategies are being implemented. Site access and parking logistics are also determined in advance, and numerous parking areas on-site as well as off-site (accessible via shuttles) are discussed and phased. Event ingress and egress are planned out in advance of the event and key access points are determined. Information that is distributed to local media, through the AZ511.gov website and 511 phone service, and the Sky Harbor Airport traveler information screens are coordinated in advance so that travelers receive consistent information, regardless of the source.

Another key element of the PIR Traffic Management Plan is contingencies – in the event of hazardous weather conditions (such as flooding), security threat or major traffic incident, there are alternate plans that will get set in motion.

Partner agencies and responsibilities for major events at PIR include:

Phoenix International Raceway	Event Planning, Parking Management
ADOT	Freeway Management
ADOT ALERT	Freeway Management, Incident Management
Arizona Dept. of Public Safety	Event Planning, Freeway Management, Traffic Control
City of Avondale Police	Event Planning, Traffic Control

City of Avondale Public Works	Event Planning, Local Coordination
City of Goodyear Police	Event Planning, Traffic Control
City of Goodyear Public Works	Event Planning, Local Coordination
Maricopa County Sheriff	Event Planning, Lead Traffic control on Day-of-Event
MCDOT Traffic Engineering	Lead Event Planning, Manage Traffic Control Crews on day of Event
MCDOT Public Relations	Public Relations, Media Coordination
MCDOT REACT	Incident Management
MCDOT ITC	Radio/Video Communications

7. IMPLEMENTATION CONCEPT AND ACTIONS

7.1 Introduction

Implementing ICMS strategies in the I-10 corridor will require an incremental phased approach over several years. Without substantial new funding sources, partners will need to work within current programmed funding levels and established funding mechanisms and programs in the region. Arterial management agencies, including Phoenix, Avondale, Goodyear, Buckeye and MCDOT all have at least one project in the upcoming TIP that will support the goals of ICMS. Both MCDOT and MAG have got key regional initiatives aimed at enhancing signal coordination, arterial traveler information, and agency information exchanges; although these are more regional in nature, they are definitely in line with ICMS goals and objectives, and will serve to enhance the overall strategy within the corridor.

As the region moves toward the next TIP funding and programming cycle (2013), the intent of these recommendations is to summarize ICMS initiatives that should be pursued, including opportunities for agencies to partner on a joint project. This section provides an overview of existing programmed projects and introduces the recommended ICMS implementation mechanisms projected for the ICMS initiative and provides some "next steps" actions that the I-10 ICMS stakeholders can begin to undertake.

7.2 Implementation Mechanisms

This section discusses projects and programs that are currently funded within the corridor area that could support ICMS initiatives and coordination. For each agency, their role and identified projects are identified.

7.2.1 ADOT

ADOT is the responsible agency for managing the I-10 widening projects; thus, ADOT should coordinate with other ICMS stakeholders in developing plans to effectively and efficiently disseminate the latest I-10 construction information to all relevant stakeholders, including the public. ADOT should also investigate the feasibility of implementing the temporary work-zone ITS and expanding FMS further west along I-10, although implementing FMS infrastructure on this segment of I-10 is not part of any near-term funding scenario. These ITS applications are vital in acting the eyes and ears of collecting real-time traffic and congestion conditions on I-10, particularly during construction phases. The increasing growth and demand within the I-10 Corridor, as well as the prominence of I-10 as a significant freight/goods movement corridor, can potentially help to elevate the priority of ITS infrastructure. This real-time information availability from ITS is crucial in the rapid traffic management actions in response to the sophisticated traffic movements within the I-10 construction areas.

At present, ADOT does not have any projects programmed within the current TIP that are specific to the West Valley to support ICMS. The majority of ADOT's focus in the corridor area is on the roadway widening and capacity enhancements. The current TIP includes annual line items for the Freeway Service Patrol and for ongoing FMS maintenance/enhancements.

7.2.2 *Maricopa Association of Governments*

MAG must continue to act the role of I-10 ICMS champions to facilitate the ICMS projects, including providing a forum for stakeholders to meet and coordinate, and to promote the benefits and the need of ICMS. However, the champions must also have the ability to influence decisions, as well as take a leadership role with outreach and awareness to policy makers. MAG should also assist other ICMS stakeholders in leveraging resources among jurisdictions and looking at the "next level" of partnership opportunities. By hosting future and regular ICMS working group meetings, MAG continues the momentum for ICMS needed to be maintained and carried forward. MAG can also help to champion ICMS concepts at the ITS Committee level, as well as with other MAG transportation committees and the Regional Council.

MAG has a Traffic Signal Optimization Program (TSOP) whereby local agencies can apply for funding for signal operations/coordination enhancements. In the near-term, there are three cycles of TSOP applications that partners in the ICMS corridor could apply for; MAG encourages multi-agency applications.

Key initiatives that are programmed for MAG that support ICMS are shown in the table below.

Year	Location	Type of Work	Fund Type	Federal Cost	Regional Cost	Local Cost	Total Cost
2008	Regionwide	Regional Rideshare Program	CMAQ	660,000	0	0	660,000
2009	Regionwide	Traffic Signal Optimization Program	CMAQ	294,908	0	0	294,908
2009	Regionwide	Regional Rideshare Program	CMAQ	660,000	0	0	660,000
2010	Regionwide	Traffic Signal Optimization Program	CMAQ	321,497	0	19,503	341,000
2010	Regionwide	Regional Rideshare Program	CMAQ	660,000	0	0	660,000
2011	Regionwide	Regional Rideshare Program	CMAQ	721,000	0	0	721,000
2012	Regionwide	Regional Rideshare Program	CMAQ	721,000	0	0	721,000
2012	Regionwide	Traffic Signal Optimization Program	CMAQ	298,865	0	18,135	317,000

7.2.3 *Valley Metro and Valley Metro Rail*

Valley Metro is the champion in facilitating key transit ICMS strategies, which are important in providing additional capacity as well as more efficient and flexible transportation alternatives to the I-10 Corridor. These include expanding operations to

provide additional coverage and routes, as well as promoting commute alternatives, such as carpooling, rideshare and other trip reduction mechanisms.

Expanding or increasing transit service through the Corridor area is challenging without any additional funding; the 20-year plan identified specific services and routes as well as implementation timeframes, and deviating from this established plan would require additional funding. At present, planned implementation of a Papago Connector will commence in July 2008. Facilities to support increased transit in the West Valley are limited, although a Park and Ride is nearing completion in Goodyear, and Buckeye is also planning a Park and Ride. As a result of the I-10 widening, HOV lanes will be extended further west, thus providing additional incentives for transit usage.

Valley Metro Rail is the early planning and feasibility stages of an extension of Light Rail along the I-10 Corridor, which would provide LRT service from downtown to 79th Avenue.

It is recommended that Valley Metro commence its plan of upgrading the existing telephone-based bus arrival time (scheduled) information system to a state-of-the-art transit information system which delivers real-time bus arrival time to the general public. With the system enhancement, the general public will be able to receive the most comprehensive transportation information on I-10 Corridor to make optimal traveling decisions.

The programmed ICMS-related project list for Valley Metro is shown below.

Year	Location	Type of Work	Fund Type	Federal Cost	Regional Cost	Local Cost	Total Cost
2007	Regionwide	Vanpools: 12 expand	CMAQ-Flex	337,500	112,500	0	450,000
2008	Regionwide	Vanpools: 25 expand	PTF	0	795,675	0	795,675
2008	West Valley	Papago Freeway Connector (07/24/08)	Local or Proposition 400	0	0	327,000	327,000
2008	West Valley	Route 17A Avondale (01/24/08)	Local or Proposition 400	0	0	241,500	241,500
2009	Regionwide	Vanpools: 25 expand	PTF	0	819,550	0	819,550
2009	West Valley	Papago Freeway Connector (07/24/08)	Local or Proposition 400	0	0	449,000	449,000
2009	West Valley	Route 17A Avondale (01/24/08)	Local or Proposition 400	0	0	498,000	498,000
2010	Regionwide	Vanpools: 25 expand	PTF	0	844,125	0	844,125
2010	West Valley	Papago Freeway Connector (07/24/08)	Local or Proposition 400	0	0	462,000	462,000

Year	Location	Type of Work	Fund Type	Federal Cost	Regional Cost	Local Cost	Total Cost
2010	West Valley	Route 17A Avondale (01/24/08)	Local or Proposition 400	0	0	513,000	513,000
2011	Regionwide	Vanpools: 25 expand	PTF	0	869,450	0	869,450
2012	Regionwide	Vanpools: 25 expand	PTF	0	895,550	0	895,550
2012	I-10 West	Fixed Guideway, Preliminary Engineering/FEIS	PTF	0	39,000,000	0	39,000,000

7.2.4 Maricopa County DOT

MCDOT acts as a key player in leveraging multiple data resources to further enhance the arterial information systems at both 511 and AZ511.com. The MCDOT TMC, equipped with Regional Archived Data Server, may provide some monitoring support to the West Valley I-10 Corridor in coordination with Avondale and Goodyear. An excellent operational relationship is already established as a result of the PIR event traffic management plan. Once the ITS strategic plans of other regional jurisdictions are available and before the actual implementation of ITS devices takes place, MCDOT should initiate discussions and developments of a multi-agency corridor operations plan for the ICMS partner agencies, including operational procedures of joint sharing and viewing of signal timing plans, DMS, and CCTV, along with permissive control of some devices.

MCDOT also operates REACT, which is an arterial emergency traffic management response team. One of the early strategies discussed as part of the Concept of Operations was to expand REACT service to Goodyear and Avondale. An Intergovernmental Agreement is already in place to provide service to these areas, but if additional funding is available to procure vehicles and fund staff, this should be pursued.

MDOT has also been actively deploying ITS and communications infrastructure along MC 85. Soon, detectors will also be installed to provide arterial traffic volume and speed information (these are being installed as part of the ITIP program).

The programmed ICMS-related project list for MCDOT is shown below. Although several of these projects are identified as ‘regionwide’, these regional projects help support key ICMS initiatives.

Year	Location	Type of Work	Fund Type	Federal Cost	Regional Cost	Local Cost	Total Cost
2008	Regionwide	Expand Arterial traveler info. Including 511 and AZ511.com	CMAQ	291,725	0	135,159	426,884
2010	MCDOT TMC	Design and Construct TMC Upgrade	CMAQ	735,000	0	362,500	1,097,500
2011	5 different locations	Upgrade traffic signals, including CCTV facilities	CMAQ	100,000	0	150,000	250,000
2012	Regionwide	Upgrade Regional Archived Data Server (RADS) Equipment	CMAQ	67,992	0	29,508	97,500

7.2.5 City of Avondale

Most of the short-term widening constructions on both Van Buren St. and I-10 are schedule to occur with the city limit of Avondale. In to order to manage the potential heavy arterial traffic due to construction, the City of Avondale may have to actively develop a tailored incident management plan, particularly alternate route plans, and facilitate the mast planning and implementation of additional arterial ITS technologies, including CCTV, DMS and detectors, with utilization of Avondale's wireless communication network. Collaborating with ADOT, Goodyear, Phoenix and MCDOT, a more comprehensive alternate routing plan can be developed.

With the scheduled enhancements of the bus services between Avondale and Phoenix, Avondale and transit agencies have to work collectively to promote the use of public transportation within the Avondale communities.

The programmed ICMS-related project list for City of Avondale is shown below.

Year	Location	Type of Work	Fund Type	Federal Cost	Regional Cost	Local Cost	Total Cost
2008	Avondale City Hall	Strategic plan for TMS and TMC Design	CMAQ	341,691	0	146,439	488,130

7.2.6 Town of Buckeye

Immediate I-10 construction projects are not going to occur within the vicinity of Buckeye. Yet, due to increasing developments in the area, Buckeye should start its long-term ITS Master Plan, including a TMC, in anticipation of the new Fiber-Optic network scheduled to start in 2009. With the completed setup of the park-and-ride facility for the new express bus service (Papago Connector), connecting Buckeye and Phoenix, Buckeye and Valley Metro should collaborate jointly in introducing and promoting the image of public transportation within the communities.

The programmed ICMS-related project list for Buckeye is shown below.

Year	Location	Type of Work	Fund Type	Federal Cost	Regional Cost	Local Cost	Total Cost
2009	I-10/Miller Rd	Regional Park-and-Ride	PTF	0	1,862,152	0	1,862,152
2009		Plan, Design and Construct a Fiber Optic Network		210,000			210,000
2010	I-10/Miller Rd	Regional Park-and-Ride (Advance Construction)	PTF	0	2,898,201	0	2,898,201

7.2.7 City of Goodyear

Due to its strategic geographic position in West Valley I-10 Corridor, the City of Goodyear must work closely with City of Avondale in developing a joint coordination plan to relieve the potential heavy arterial traffic crossing the two cities, as well as coordinate closely with ADOT and Avondale for traffic routing and closures during the I-10 reconstruction. There is already a high degree of coordination between these entities. Goodyear is in the process of implementing important ITS infrastructure that will provide the foundation for the City's ITS program, and a Strategic Plan is underway that will map out future deployment and integration priorities.

The programmed ICMS-related project list for Goodyear is shown below. Some of these projects are already underway, including establishing a Traffic Operations Center and installing fiber along Litchfield Road.

Year	Location	Type of Work	Fund Type	Federal Cost	Regional Cost	Local Cost	Total Cost
2007*	Goodyear TOC	TOC Equipment	CMAQ	640,000	0	160,000	800,000
2007*	Litchfield Rd: Wingwam Blvd to MC 85	Install conduit and fiber cabling	CMAQ	500,000	0	125,000	625,000
2008	I-10/Litchfield Rd	Regional Park-and-Ride	STP-AZ	2,034,665	0	508,666	2,543,331
2011	Citywide	Traffic Signal System ITS Backbone and Comm. System	CMAQ	700,000	0	1,000,000	1,700,000
2012	McDowell Rd: Sarival Rd to Litchfield Rd	Fiber Optic Interconnect for traffic signals and video	CMAQ	588,809	0	255,541	844,350

**These projects are already underway*

7.2.8 City of Phoenix

City of Phoenix arterials are in the eastern portion of the ICMS corridor. Although the construction on I-10 is likely to have a more significant impact on Goodyear and Avondale, portions of these key arterials are also in Phoenix. Similarly, motorists entering or exiting the freeway to avoid the restricted segments of I-10 further west are likely to do so within Phoenix's jurisdiction. Signal coordination is an important ICMS strategy identified by stakeholders. Phoenix is planning to widen segments of McDowell and Van Buren; this could be a good opportunity to include communications infrastructure with these projects to support enhanced signal operations and coordination. Future improvements on Buckeye may also want to consider including telecommunications.

The programmed ICMS-related project list for Phoenix is shown below.

Year	Location	Type of Work	Fund Type	Federal Cost	Regional Cost	Local Cost	Total Cost
2008	McDowell Rd: 83rd to 75th Ave	Reconstruct roadway to 64 ft section, adding 2 through lanes	Local	0	0	5,703,282	5,703,282
2008	Van Buren St: 75th to 67th Ave	Reconstruct roadway to 64 ft section, adding 2 through lanes	Local	0	0	4,375,000	4,375,000
2011	Various Locations	Construct regional ITS Telecommunications expansion	CMAQ	700,000	0	500,000	1,200,000
2012	Buckeye Rd: 67th to 59th Ave	Acquire right of way for reconstruction of roadway to 74 ft section	Local	0	0	300,000	300,000
2012	Buckeye Rd: 67th to 59th Ave	Reconstruct roadway to 74 ft section	Local	0	0	1,610,000	1,610,000

7.3 Next Step Actions

Early in the Concept of Operations development, several potential ICMS strategies were identified for implementation. Many of these strategies for near-term deployment were contingent on federal funds ("Plan A") through the FHWA Congestion Initiative (Operational Test to Mitigate Congestion Grant Funding). In August 2007, the Region was notified that it was not selected for the Congestion Mitigation funding. As a result, ICMS in the I-10 corridor will need to be implemented in a phased, incremental manner, utilizing available regional funding resources and programs ("Plan B"). It will also be important for agencies to coordinate on potential ICMS deployment and integration, as there could be some advantages to leveraging funding and resources.

This section discusses priority items moving forward from the Concept of Operations into more structured ICMS project development, deployment and operations. It presents opportunities for

integrating ICMS with currently programmed projects, as well as recommends additional priorities that agencies should consider for the next TIP programming cycle.

It is important to note that this Concept of Operations is not intending to serve as a deployment plan; however, through the discussions to develop the Concept of Operations for ICMS, key priorities have emerged. Despite the fact that significant federal funds will not likely be received, agencies can still move forward with incremental enhancements that will ultimately support the broader ICMS goals.

Table 35 shows Near Term project recommendations that could potentially be accomplished within current programs and programming cycles (to include the 2013 programming year). This takes into account available TSOP funds through MAG, and identifies high priority operations planning efforts that will support further ICMS integration. It is important to note that both Goodyear and Avondale are embarking on ITS Strategic Plans that will be mapping out priorities, device locations and integration strategies within those jurisdictions. Both agencies recognize that there is tremendous benefit to early coordination on ITS project development and phasing.

Table 35 – Near-Term ICMS Recommendations – 2008 to 2013

Project Name/Description	Agency	Cost Estimate	Timeframe	Notes
Alternate Route Guide	Joint Project – Avondale, Goodyear, Phoenix, MCDOT; will also involve ADOT and Buckeye	75-100k	2008	Price may vary based on area covered and data available. MCDOT previously prepared an Alternate Route Guide for Bell Road between 183rd Avenue and 83rd Avenue (approx. 12.5 miles) for 60k in 2006.
TSOP – City of Avondale	Avondale	$20-30K per project annually	2008 2009 2012	Identify key corridors for TSOP coordination. Joint project with McDowell
TSOP – City of Goodyear	Goodyear	$20-30K per project annually	2008 2009 2012	Identify key corridors in Goodyear
TSOP – City of Phoenix	Phoenix	$20-30K per project annually	2008 2009 2012	Identify key corridors in Phoenix in the ICMS corridor area. Emphasis on McDowell Road
TSOP – MCDOT	MCDOT	$20-30K per project annually	2009 2012	Update to coordination timing on MC 85
McDowell Road CCTV	Avondale, Goodyear and Phoenix	$2.5-5k per location for install	2012 and 2013	Installation and communication to camera could also be incorporated to traffic signal design/construction

Table 35 – Near-Term ICMS Recommendations – 2008 to 2013 (continued)

Project Name/Description	Agency	Cost Estimate	Timeframe	Notes
RCN Expansion to include Goodyear and Avondale	Joint project – Goodyear, ADOT and Avondale	$1.75M	2013	Expand RCN to include Goodyear and Avondale TMCs. Both should be complete. Could potentially be accelerated if close-out funds are available. Fiber for this phase could be utilized for FMS expansion west of Loop 101.
Arterial DMS – McDowell, potentially other locations (including N/S arterials)	Avondale, Goodyear and Phoenix	$125k per install	2013	Cost is construction cost. Design costs will vary based on funding source.
McDowell Road and Van Buren Communications Infrastructure	Phoenix		2008	Phoenix has a programmed project to widen McDowell between 83rd and 75th Avenues, as well as Van Buren from 67th to 75th Avenues. Recommend installing communications and detection as part of this widening, if not already planned.
Analysis of Data Collection Options for Freeways and Arterials	MAG	$75	2009	Recommend conducting a comprehensive analysis of data collection options for freeway and arterials. In the event that FMS is not deployed with detection, look at alternatives for private sector or non-infrastructure based strategies.
Multi-agency ICMS Operations Plan	MCDOT ADOT Goodyear Avondale Buckeye Phoenix	$50K	2013	A detailed operations plan will require that additional devices be in place. It is recommended that the Operations Plan be developed following additional deployment.

Table 36 identifies longer term project recommendations, with a specific focus on FMS deployment and arterial ITS infrastructure. With these priorities identified, agencies can begin planning ahead for the next round of programming.

Table 36 – Longer Term ICMS Recommendations – 2014 and Beyond

Project Name/Description	Agency	Cost Estimate	Timeframe	Notes
Phase 17 FMS on I-10, 99th Avenue to Dysart	ADOT	$5M	2016	Assumes conduit installed as part of I-10 widening. Phase 17 is part of the current FMS plan.
Future phase FMS on I-10, Dysart to Citrus	ADOT	$8M	2018	Assumes no conduit installed in this segment
Additional ITS Devices on arterials (CCTV, DMS).	Avondale Goodyear Phoenix MCDOT Buckeye	Varies	2014 2015 2016 2018	Avondale and Goodyear will be defining project priorities through their strategic plans.
24/7 TMC at MCDOT to serve as after-hours back-up for cities	MCDOT	$125K annually	2014	Cost is for 2 additional staff to cover expanded hours.

7.3.1 Key Corridor – McDowell Road

Because ICMS will need to be implemented on an incremental basis, it will be important for stakeholders to narrow the focus for the initial 'proof of concept' projects and approaches. Arterials in the ICMS corridor area were reviewed for their feasibility to serve as a 'quick start' candidate arterial corridor.

MCDOT currently communicates with the signalized intersections along MC 85/Buckeye Road, another major east-west arterial with in the project area. There are currently seven CCTV cameras deployed along this corridor from 83rd Avenue to Cotton Lane. This corridor will soon be outfitted with mid-block detection at seven locations. In addition, traffic signal coordination timing plans will be implemented. This corridor will likely serve as a major east-west alternative to I-10 for freight and commercial vehicles. However, because current ITS initiatives are already underway on this corridor, MC 85/Buckeye Road is not considered a high priority for future deployments.

Thus, McDowell Road, another major parallel arterial to I-10, becomes a vital player in the efforts of ICMS to relieve the congestion on I-10. The City of Avondale has existing wireless communication to seven signalized intersections along McDowell Road. CCTV cameras are currently deployed at the intersections of McDowell Road/ 99th Avenue and McDowell Road/ Dysart Road. In Goodyear, fiber optic conduit and cable along McDowell Road from Sarival Avenue to Litchfield Road is programmed for 2012. The City of Phoenix will begin a capacity improvement project that will add lanes to McDowell Road between 79th Avenue and 83rd; this could provide an opportunity to include communications and signal enhancements (potentially through TSOP funding). The existing and planned technology on McDowell Road combined with the number of signalized intersections along this corridor adds to the importance of McDowell Road as the key corridor for initial deployment. The communication infrastructure on McDowell Road will facilitate the adoptions of advanced ITS strategies and technologies to be possible.

7.3.2 Developing Alternate Route Guides

Advanced planning and preparation of alternate route plans greatly enhances the on-scene traffic management capabilities of interagency incident agencies through utilization of the corridor capacity leveraged by ICMS. The importance of the optimal use of the existing capacity is particularly obvious during the occurrence of a traffic incident or other event such as construction which disrupts the normal flow of traffic. According to the *Alternate Route Handbook* (FHWA), there are three broad phases involving alternate route planning process: Alternate Route Selection, Alternate Route Plan Development and Traffic Management Planning. Due to the planned arterial construction and work zone activities, there will likely be conflicts between ADOT construction and work zone activity on nearby arterials. It is recommended that ICMS stakeholders develop alternate route plans for key locations with in the I-10 Corridor, beginning with McDowell Road. These Alternate Route Plans should considering the construction phasing schedules for ADOT's I-10 project a well as planned arterial reconstruction by Phoenix and Goodyear. Additional routes, including Van Buren and MC 85 and key north/south arterials should also be a part of the plan.

The cost associated with developing an alternate route guide varies based on the area covered by the guide and the amount of route data available. An estimate of $75,000 – $100,000 should be considered.

7.3.3 Multi-jurisdictional Traffic Signal Coordination Timing on Key Corridors

Because the arterials located within the ICMS project area are operated by multiple jurisdictions, traffic signal timing strategies must be consistent across jurisdictional boundaries. Optimizing the movement of platoons of traffic through signalized areas more efficiently utilizes the existing roadway capacity. Traffic signal coordination plans should be developed for the east-west alternatives to I-10. These plans should account for increased traffic volumes as vehicles divert from I-10 during construction activities. Because this area also experiences high traffic volumes on the north-south arterials, progression along these corridors must also be considered.

It is recommended that the signalized intersections within the project area be modeled in order to simulate traffic conditions during construction. The same model can be used to develop multiple timing plans tailored to peak periods and/or construction phases. Preparing a model and timing plans before long-term closures on I-10 begin will allow for the proposed timing to be implemented as soon as the closures occur causing increased volumes on the arterials. The cost associated with developing a model and timing plans for 4 peak periods is approximately $2,000 per intersection. This cost would vary based on the availability of count data and existing models.

Potential funding sources for such modeling and timing development is MAG's Traffic Signal Optimization Program (TSOP). It is recommended that the Cities of Goodyear, Avondale, and Phoenix apply jointly for TSOP funds to develop traffic signal coordination timing for McDowell Road. If funding restrictions do not allow for the entire corridor to be modeled and/or timed at once, it is recommend that McDowell Road be partitioned into segments which mirror the construction phasing on I-10. This way, as construction progresses, and funding becomes available, the model can be expanded to include larger portions of McDowell Road.

Avondale and Goodyear should also identify additional corridors for signal coordination – Van Buren could serve as an additional joint project. Other corridors could include north/south arterials within the respective jurisdictions.

7.3.4 Multi-Agency Operations Plan

This plan would provide a multi-jurisdictional approach to documenting the agreements and procedures among I-10 ICMS agencies regarding usage, permissions, operational times, and limitations of the system. The plan will include guiding principles for operating the corridor after all devices and communication infrastructure has been implemented and is operationally ready for use. This operations plan would include operational guidelines and roles and responsibilities for the various devices of the system, equipment maintenance, performance monitoring, and future vision for the corridor. Using this operations plan, ICMS partner agencies will be able to begin operations with a clear picture of how to manage the corridor through day-to-day activities, incidents, and special events.

A model has already been established for a multi-agency corridor operations plan (Bell Road, which includes Peoria, Surprise and MCDOT). A similar approach could be effectively utilized for the I-10 ICMS, but expanded to include additional agencies and modes.

Because there is limited ITS deployment on the arterial network, and no FMS on this portion of I-10, it is recommended that agencies defer this project until additional infrastructure is in place.

7.3.5 Developing Operational Agreements among Agencies for Corridor Operations and Information

This will expedite the sharing of information and resources among ICMS stakeholders. Operational Agreement should address ICMS project participation, O&M responsibilities, and other operational and information-sharing requirements pertinent to the success of the ICMS. Existing agreements between multiple jurisdictions should be collected and reviewed as a starting point for the ICMS Operational Agreements. The successful partnership agreements between transportation agencies and transit agencies will enable ICMS integrations such as integrating the real-time bus arrival information with the newly developed mobile-phone based platform (Mobile Traffic Information Portable) which provides freeway speeds and travel times.

7.3.6 Outreach and Awareness

I-10 construction information should be more proactively distributed to media partners through various travel information workshops and public awareness activities, and a focus group should be formed to be dedicated over such a task to ensure information quality in consistency, correctness and completeness aspects. The focus group should include PIOs from transit, ADOT, MCDOT, MAG, Valley Metro, Cities and Public Safety. ADOT is already likely spearheading a similar effort through the I-10 widening.

I-10 freight traffic on Phoenix segment is one of the heaviest in the nation, and as such, it is extremely critical to alert them to congestion and restrictions. With plans to develop an

Arterial Traveler Information System, including 511 and AZ511.com in 2008, ICMS stakeholders should design and implement a freight-specific application where commercial vehicle operators can obtain critical information. Reliability of broadcasted travel time information on I-10 from day to day are extremely valuable since most freight movement requires scheduling for either a transfer from another vehicle or for a delivery. The new freight-focused application in both traveler information system and outreach programs can also significantly improve the ongoing coordination and two-way communication between ICMS stakeholders and Arizona Trucking industry members. The creation of a routine Regional Freight Mobility Roundtable is proposed to provide a forum for public and private sector stakeholders to discuss freight mobility needs in the region.

7.3.7 Fostering Closer Coordination for Multi-Modal Planning to Elevate Priority of Transit Strategies

Transit is a vital element of ICMS since it provides additional capacity and an efficient transportation mode to move people within the corridor. Thus, Multi-Model Planning, which aims to utilize all available transportation modes, is an important "next step action" item. This also involves setting the stage for integrating Light Rail Transit into the ICMS development. This integration enables the potential coordination between the schedules and intermodal facilities of light rail and buses to reduce the amount time lost in intermodal transfers resulting in promoting public transportation as a more attractive commuting alternative in the West Valley. Closer Partnership between multiple modes and agencies would lead to a larger negotiation power for addressing multi-modal needs on priority corridors that should have been incorporated into regional funding and programming process, and corridor agency strategic planning process.

7.3.8 Developing a Model to Predict the Network-wide Impacts of the Proposed ICMS Strategies Collectively under various Scenarios

Optimal use of the existing facilities and networks in I-10 Corridor can only be achieved through a combination of various well-planned ICMS strategies. The nature of the interactions between the network demands and the ICMS strategies is typically very complex and multi-dimensional. ICMS stakeholders need to form a task-force team to identify current modeling tools and analysis capabilities that will support the assessment of various corridor scenarios and ICMS strategies. After the identifying the feasible models, the task-force team should analyze each tools in terms of the capabilities to capture the following aspects of ICMS modeling: corridor and network dynamics, operational scenarios (including construction events), ICMS strategies and ICMS specific performance measures. Data sources of the model will likely come from the ICMS Data Archiving/Access action item. Modeling traffic patterns and freight movements can potentially identify where are the areas of high or unique usage as well as the needs for more targeted strategies and focused resources.

APPENDIX A – SIGNALIZED INTERSECTIONS

Appendix A – Signalized Intersections

Agency	Location	Status	Communication Type
ADOT	I-10/107th Avenue (EB)	Existing	N/A
	I-10/107th Avenue (WB)	Existing	N/A
	I-10/67th Avenue (EB)	Existing	N/A
	I-10/67th Avenue (WB)	Existing	N/A
	I-10/75th Avenue (EB)	Existing	N/A
	I-10/75th Avenue (WB)	Existing	N/A
	I-10/83rd Avenue (EB)	Existing	N/A
	I-10/83rd Avenue (WB)	Existing	N/A
	I-10/91st Avenue (EB)	Existing	N/A
	I-10/91st Avenue (WB)	Existing	N/A
	I-10/99th Avenue (EB)	Existing	N/A
	I-10/99th Avenue (WB)	Existing	N/A
	I-10/Avondale Boulevard (EB)	Existing	N/A
	I-10/Avondale Boulevard (WB)	Existing	N/A
	I-10/Bullard Avenue (EB)	Existing	N/A
	I-10/Bullard Avenue (WB)	Existing	N/A
	I-10/Cotton Lane (EB)	Planned	N/A
	I-10/Cotton Lane (WB)	Planned	N/A
	I-10/Dysart Road (EB)	Existing	N/A
	I-10/Dysart Road (WB)	Existing	N/A
	I-10/Estrella Parkway (EB)	Existing	N/A
	I-10/Estrella Parkway (WB)	Existing	N/A
	I-10/Litchfield Road (EB)	Existing	N/A
	I-10/Litchfield Road (WB)	Existing	N/A
	McDowell Road/SR 101 (NB)	Existing	N/A
	McDowell Road/SR 101 (SB)	Existing	N/A
Avondale	Agua Fria Union High School/Dysart Road	Existing	Wireless
	Alameda Crossing/Dysart Road	Existing	Wireless
	Buckeye Road/4th Street	Existing	Wireless
	Buckeye Road/Central Avenue	Existing	Wireless
	Buckeye Road/Dysart Road	Existing	Wireless
	C.S. Boulevard/Avondale Avenue	Planned	N/A

Appendix A – Signalized Intersections (continued)

Agency	Location	Status	Communication Type
Avondale (continued)	Coffelt Drive/Dysart Road	Existing	Wireless
	McDowell Road/101st Avenue	Existing	Wireless
	McDowell Road/103rd Avenue	Existing	Wireless
	McDowell Road/107th Avenue	Existing	Wireless
	McDowell Road/117th Avenue	Planned	N/A
	McDowell Road/119th Avenue	Planned	N/A
	McDowell Road/99th Avenue	Existing	N/A
	McDowell Road/Avondale Boulevard	Existing	Wireless
	McDowell Road/Costco Driveway	Existing	N/A
	McDowell Road/Dysart Road	Existing	Wireless
	McDowell Road/Rancho Santa Fe Boulevard	Existing	Wireless
	Pierce Street/107th Avenue	Planned	N/A
	Polk Street/Dysart Road	Existing	Wireless
	Rancho Santa Fe Boulevard/Dysart Road	Existing	Wireless
	Riley Drive/Dysart Road	Existing	Wireless
	Roosevelt Street/107th Avenue	Planned	N/A
	Roosevelt Street/Avondale Boulevard	Existing	N/A
	Van Buren Street/107th Avenue	Existing	N/A
	Van Buren Street/Avondale Boulevard	Existing	Wireless
	Van Buren Street/Central Avenue	Existing	Wireless
	Van Buren Street/Dysart Road	Existing	Wireless
	Van Buren Street/El Mirage Road	Existing	Wireless
Goodyear	Auto Drive/Litchfield Road	Existing	N/A
	Fillmore Street/Estrella Parkway	Planned	N/A
	McDowell Road/136th Drive	Existing	N/A
	McDowell Road/145th Avenue	Existing	N/A
	McDowell Road/151st Avenue	Planned	N/A
	McDowell Road/Bullard Avenue	Existing	N/A
	McDowell Road/Cornerstone	Existing	N/A
	McDowell Road/Estrella Falls Driveway	Planned	N/A
	McDowell Road/Estrella Falls Driveway	Planned	N/A
	McDowell Road/Estrella Parkway	Existing	N/A

Appendix A – Signalized Intersections (continued)

Agency	Location	Status	Communication Type
Goodyear (continued)	McDowell Road/Existing Driveway	Existing	N/A
	McDowell Road/Future Driveway	Planned	N/A
	McDowell Road/Future Driveway	Planned	N/A
	McDowell Road/Litchfield Road	Existing	N/A
	McDowell Road/Palm Valley Road	Existing	N/A
	McDowell Road/Sarival Avenue	Existing	N/A
	Roosevelt Street/Estrella Parkway	Existing	N/A
	Test Drive/Litchfield Road	Existing	N/A
	Van Buren Street/Bullard Avenue	Planned	N/A
	Van Buren Street/Estrella Parkway	Existing	N/A
	Van Buren Street/Litchfield Road	Existing	N/A
MCDOT	Buckeye Road/107th Avenue	Existing	N/A
	Buckeye Road/111th Avenue	Existing	N/A
	Buckeye Road/115th Avenue	Existing	Leased
	Buckeye Road/119th Avenue	Existing	N/A
	Buckeye Road/83rd Avenue	Existing	Leased
	Buckeye Road/91st Avenue	Existing	N/A
	Buckeye Road/99th Avenue	Existing	Leased
	Buckeye Road/Bullard Avenue	Existing	N/A
	Buckeye Road/Cotton Lane	Existing	Leased
	Buckeye Road/El Mirage Road	Existing	Leased
	Buckeye Road/Estrella Parkway	Existing	Leased
	Buckeye Road/Litchfield Road	Existing	Leased
	Buckeye Road/Sarival Avenue	Planned	N/A
Phoenix	Adams St/17th Ave	Existing	N/A
	Adams St/19th Ave	Existing	N/A
	Adams St/1st Ave	Existing	Leased
	Adams St/1st St	Existing	Leased
	Adams St/27th Ave	Existing	Leased
	Adams St/2nd St	Existing	N/A
	Adams St/3rd Ave	Existing	Leased
	Adams St/5th Ave	Existing	Leased

Appendix A – Signalized Intersections (continued)

Agency	Location	Status	Communication Type
Phoenix (continued)	Adams St/Central Ave	Existing	Leased
	Buckeye Rd/15th Ave	Existing	N/A
	Buckeye Rd/19th Ave	Existing	N/A
	Buckeye Rd/25th Ave	Existing	Leased
	Buckeye Rd/27th Ave	Existing	Leased
	Buckeye Rd/31st Ave	Existing	N/A
	Buckeye Rd/35th Ave	Existing	Leased
	Buckeye Rd/43rd Ave	Existing	Leased
	Buckeye Rd/51st Ave	Existing	Leased
	Buckeye Rd/67th Ave	Existing	N/A
	Buckeye Rd/7th Ave	Existing	N/A
	Buckeye Rd/Central Ave	Existing	Leased
	Buckeye Road/67th Avenue	Existing	N/A
	Buckeye Road/75th Avenue	Existing	N/A
	Durango St/27th Ave	Existing	Leased
	Durango St/35th Ave	Existing	Leased
	Fillmore St/1st Ave	Existing	Leased
	Fillmore St/35th Ave	Existing	Leased
	Fillmore St/Central Ave	Existing	Leased
	Grant St/15th Ave	Existing	N/A
	Grant St/17th Ave	Existing	N/A
	Grant St/19th Ave	Existing	N/A
	Grant St/7th Ave	Existing	Leased
	Hadley St/51st Ave	Planned	N/A
	Jefferson St/15th Ave	Existing	N/A
	Jefferson St/16th Ave	Existing	N/A
	Jefferson St/17th Ave	Existing	N/A
	Jefferson St/19th Ave	Existing	N/A
	Jefferson St/1st Ave	Existing	Leased
	Jefferson St/1st St	Existing	Leased
	Jefferson St/2nd Ave	Existing	Leased
	Jefferson St/2nd St	Existing	Leased

Appendix A – Signalized Intersections (continued)

Agency	Location	Status	Communication Type
Phoenix (continued)	Jefferson St/3rd Ave	Existing	Leased
	Jefferson St/4th Ave	Existing	Leased
	Jefferson St/6th Ave	Planned	N/A
	Jefferson St/7th Ave	Existing	Leased
	Jefferson St/Central Ave	Existing	Leased
	Lincoln St/1st Ave	Existing	Leased
	Lincoln St/27th Ave	Existing	Leased
	Lincoln St/35th Ave	Existing	Leased
	Lincoln St/Central Ave	Existing	Leased
	Lower Buckeye Rd/75th Ave	Existing	Leased
	Lower Buckeye Rd/83rd Ave	Planned	N/A
	Madison St/17th Ave	Existing	N/A
	Madison St/1st Ave	Existing	Leased
	Madison St/Central Ave	Existing	Leased
	Mc Dowell Rd/15th Ave	Existing	Leased
	Mc Dowell Rd/17th Ave (Fair Grounds)	Existing	Leased
	Mc Dowell Rd/19th Ave/Grand Ave	Existing	Leased
	Mc Dowell Rd/27th Ave	Existing	Leased
	Mc Dowell Rd/31st Ave	Existing	Leased
	Mc Dowell Rd/35th Ave	Existing	Leased
	Mc Dowell Rd/39th Ave	Existing	Leased
	Mc Dowell Rd/3rd Ave	Existing	Leased
	Mc Dowell Rd/43rd Ave	Existing	N/A
	Mc Dowell Rd/47th Ave	Existing	Leased
	Mc Dowell Rd/51st Ave	Existing	Leased
	Mc Dowell Rd/55th Ave	Existing	Leased
	Mc Dowell Rd/59th Ave	Existing	Leased
	Mc Dowell Rd/5th Ave	Existing	N/A
	Mc Dowell Rd/67th Ave	Existing	Leased
	Mc Dowell Rd/71st Ave	Existing	N/A
	Mc Dowell Rd/75th Ave	Existing	Leased
	Mc Dowell Rd/79th Ave	Existing	Leased

Appendix A – Signalized Intersections (continued)

Agency	Location	Status	Communication Type
Phoenix (continued)	Mc Dowell Rd/7th Ave	Existing	Leased
	Mc Dowell Rd/83rd Ave	Existing	Leased
	Mc Dowell Rd/Agua Fria Fwy (SR101)	Existing	N/A
	Mc Dowell Rd/Central Ave	Existing	N/A
	McDowell Rd/63rd Ave	Existing	N/A
	McDowell Road/71st Avenue	Existing	N/A
	McDowell Road/75th Avenue	Existing	N/A
	McDowell Road/79th Avenue	Existing	N/A
	McDowell Road/83rd Avenue	Existing	N/A
	McDowell Road/91st Avenue	Existing	N/A
	Mohave St/51st Ave	Existing	N/A
	Mohave St/Central Ave	Existing	Leased
	Monroe St/1st Ave	Existing	Leased
	Monroe St/1st St	Existing	Leased
	Monroe St/2nd St	Existing	Leased
	Monroe St/Central Ave	Existing	Leased
	Papago Fwy (I-10)/3rd Ave	Existing	N/A
	Papago Fwy (I-10)/5th Ave	Existing	N/A
	Polk St/1st St	Existing	N/A
	Roosevelt St/15th Ave /Grand Ave	Existing	N/A
	Roosevelt St/1st Ave	Existing	Leased
	Roosevelt St/1st St	Existing	N/A
	Roosevelt St/27th Ave	Existing	Leased
	Roosevelt St/35th Ave	Existing	Leased
	Roosevelt St/3rd Ave	Existing	N/A
	Roosevelt St/43rd Ave	Existing	Leased
	Roosevelt St/51st Ave	Existing	Leased
	Roosevelt St/59th Ave	Existing	Leased
	Roosevelt St/5th Ave	Existing	N/A
	Roosevelt St/75th Ave	Existing	N/A
	Roosevelt St/7th Ave	Existing	N/A
	Roosevelt St/Central Ave	Existing	Leased

Appendix A – Signalized Intersections (continued)

Agency	Location	Status	Communication Type
Phoenix (continued)	Van Buren St/15th Ave	Existing	N/A
	Van Buren St/17th Ave	Existing	N/A
	Van Buren St/19th Ave	Existing	N/A
	Van Buren St/1st Ave	Existing	Leased
	Van Buren St/1st St	Existing	Leased
	Van Buren St/21st Ave	Existing	N/A
	Van Buren St/25th Ave	Existing	Leased
	Van Buren St/27th Ave	Existing	Leased
	Van Buren St/2nd Ave	Existing	Leased
	Van Buren St/2nd St	Existing	Leased
	Van Buren St/31st Ave	Existing	Leased
	Van Buren St/35th Ave	Existing	Leased
	Van Buren St/3rd Ave	Existing	Leased
	Van Buren St/43rd Ave	Existing	N/A
	Van Buren St/49th Ave	Existing	Leased
	Van Buren St/51st Ave	Existing	Leased
	Van Buren St/59th Ave	Existing	Leased
	Van Buren St/5th Ave	Existing	Leased
	Van Buren St/67th Ave	Existing	Leased
	Van Buren St/71st Ave	Existing	N/A
	Van Buren St/75th Ave	Existing	N/A
	Van Buren St/79th Ave	Existing	Leased
	Van Buren St/7th Ave /Grand Ave	Existing	Leased
	Van Buren St/83rd Ave	Existing	N/A
	Van Buren St/Central Ave	Existing	Leased
	Van Buren Street/67th Avenue	Existing	N/A
	Van Buren Street/71st Avenue	Existing	N/A
	Van Buren Street/75th Avenue	Existing	N/A
	Van Buren Street/79th Avenue	Existing	N/A
	Van Buren Street/83rd Avenue	Existing	N/A
	Washington St/15th Ave	Existing	N/A
	Washington St/1st Ave	Existing	Leased

Appendix A – Signalized Intersections (continued)

Agency	Location	Status	Communication Type
Phoenix (continued)	Washington St/1st St	Existing	Leased
	Washington St/2nd Ave	Existing	Leased
	Washington St/2nd St	Existing	Leased
	Washington St/35th Ave	Existing	Leased
	Washington St/3rd Ave	Existing	Leased
	Washington St/4th Ave	Existing	Leased
	Washington St/6th Ave	Planned	N/A
	Washington St/7th Ave	Existing	Leased
	Washington St/Central Ave	Existing	Leased
	Watkins St/7th Ave	Existing	Leased
Tolleson	Van Buren Street/91st Avenue	Existing	N/A
	Van Buren Street/99th Avenue	Existing	N/A

APPENDIX B – TURBO ARCHITECTURE MARKET PACKAGE DIAGRAM OUTPUTS

ATMS01 – Network Surveillance – ADOT

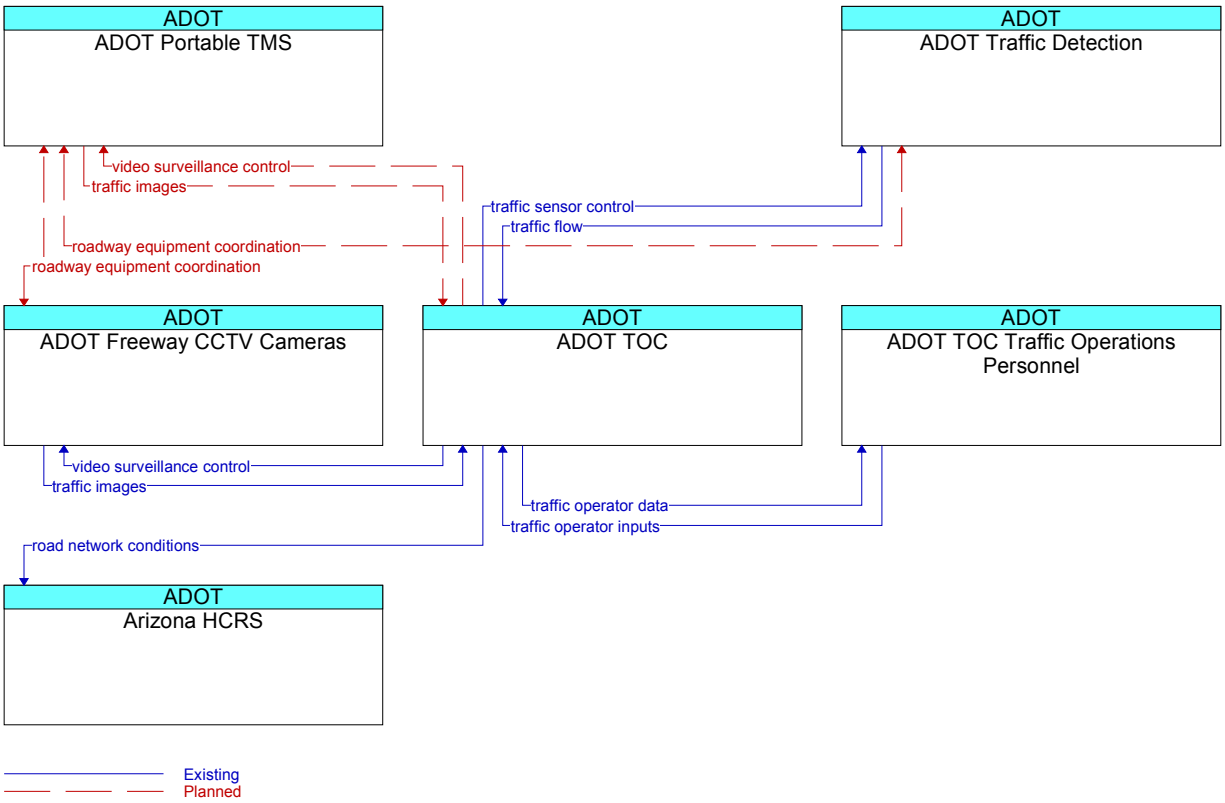

ATMS01 – Network Surveillance – Avondale

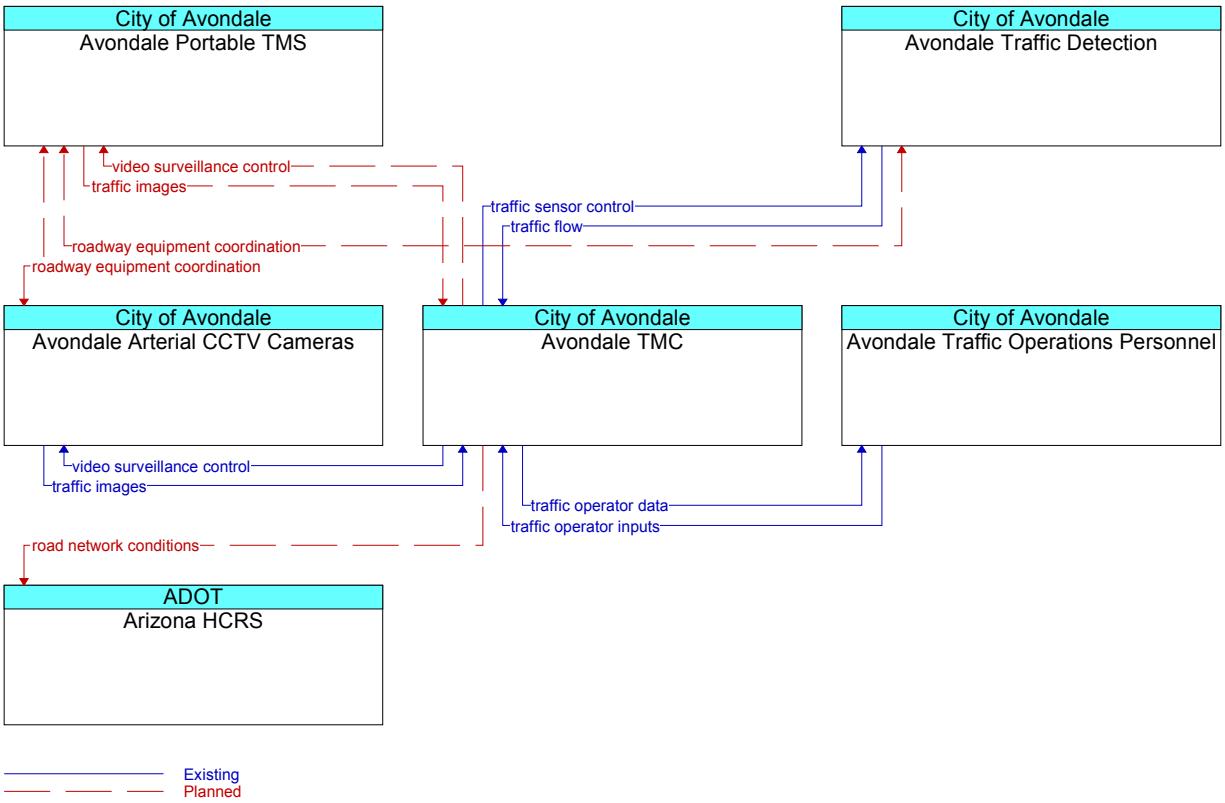

ATMS01 – Network Surveillance – Buckeye

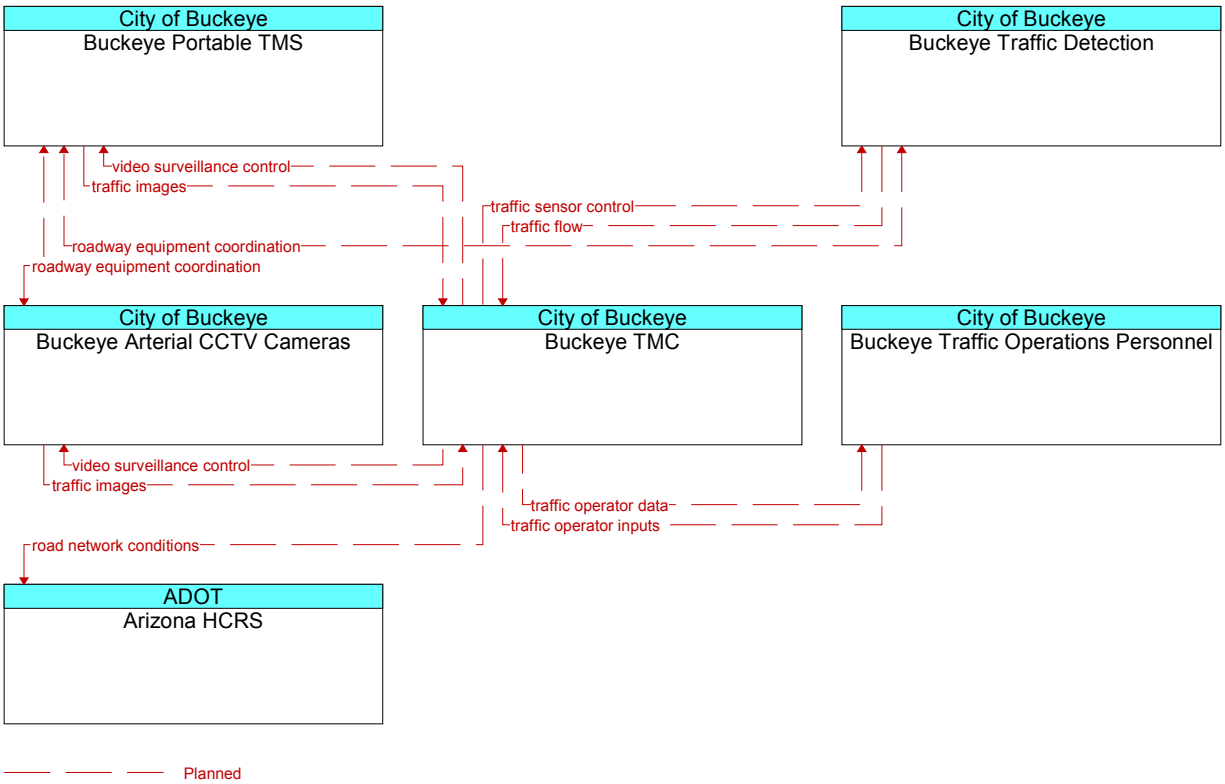

ATMS01 – Network Surveillance – Goodyear

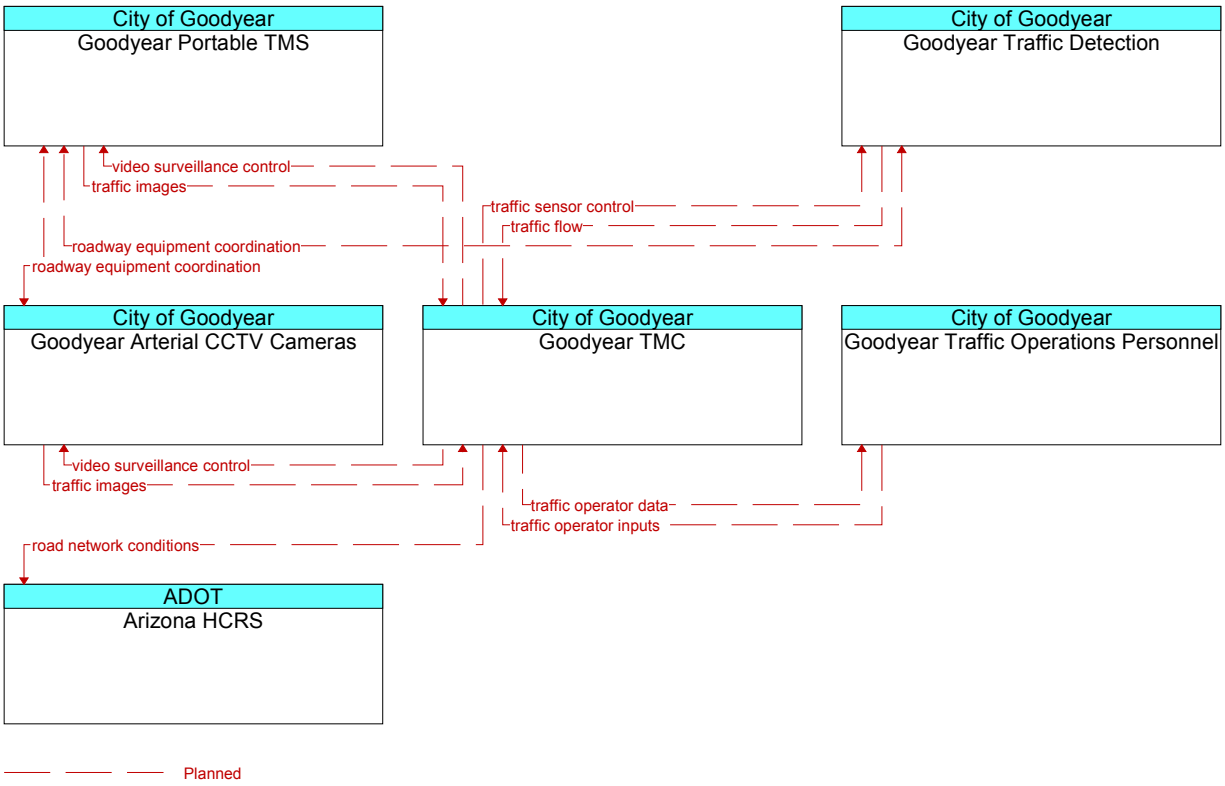

ATMS01 – Network Surveillance – MCDOT

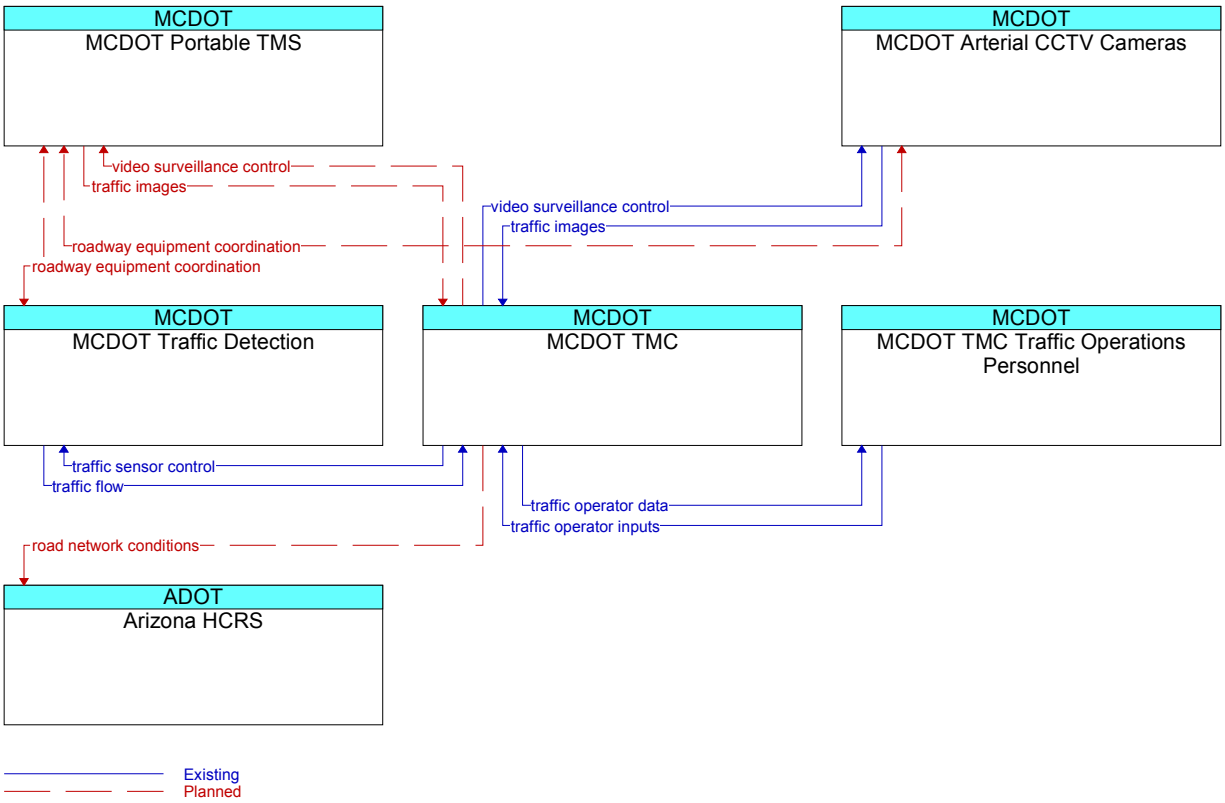

ATMS01 – Network Surveillance – Phoenix

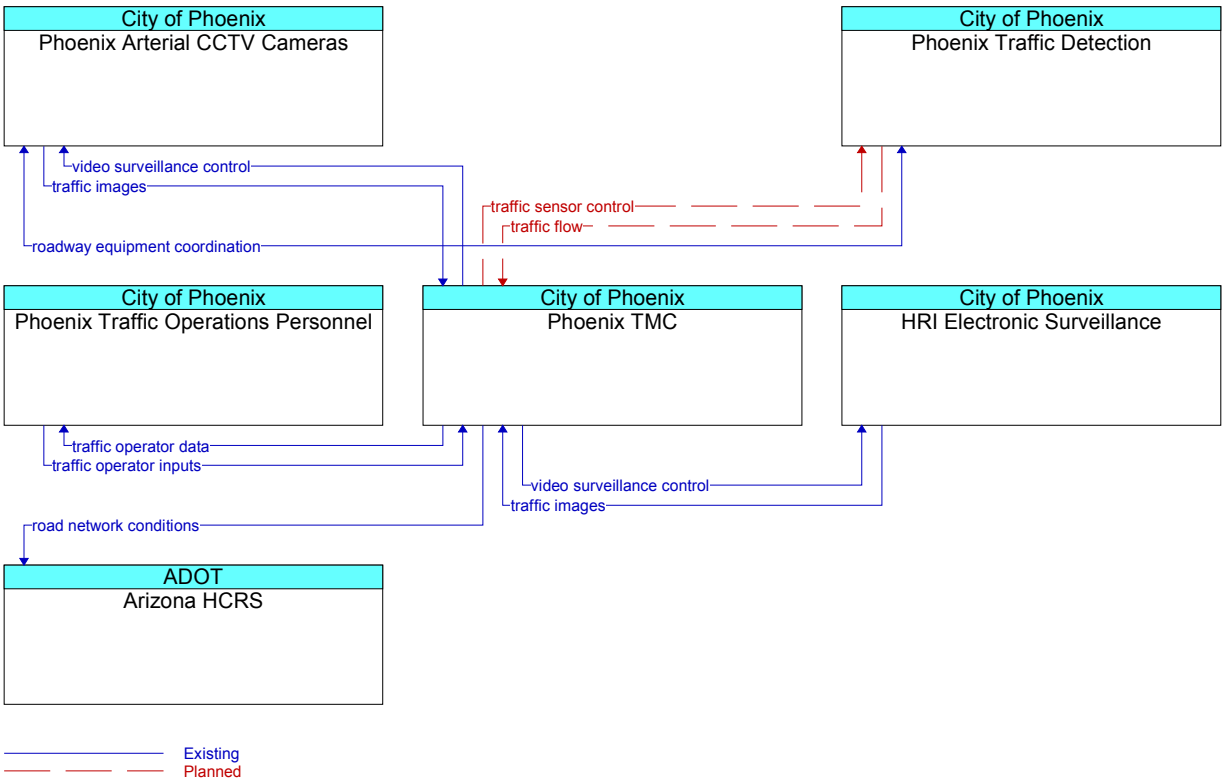

ATMS03 – Surface Street Control – Avondale

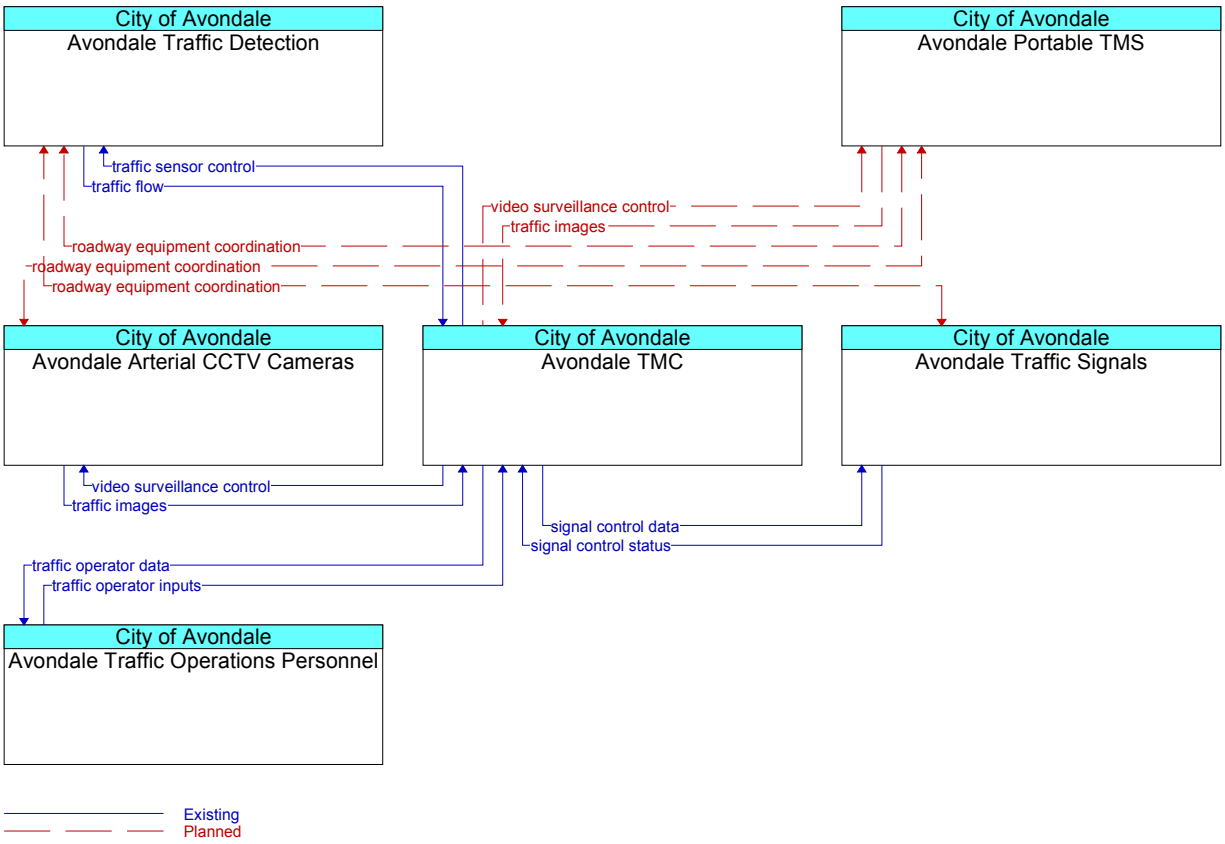

ATMS03 – Surface Street Control – Buckeye

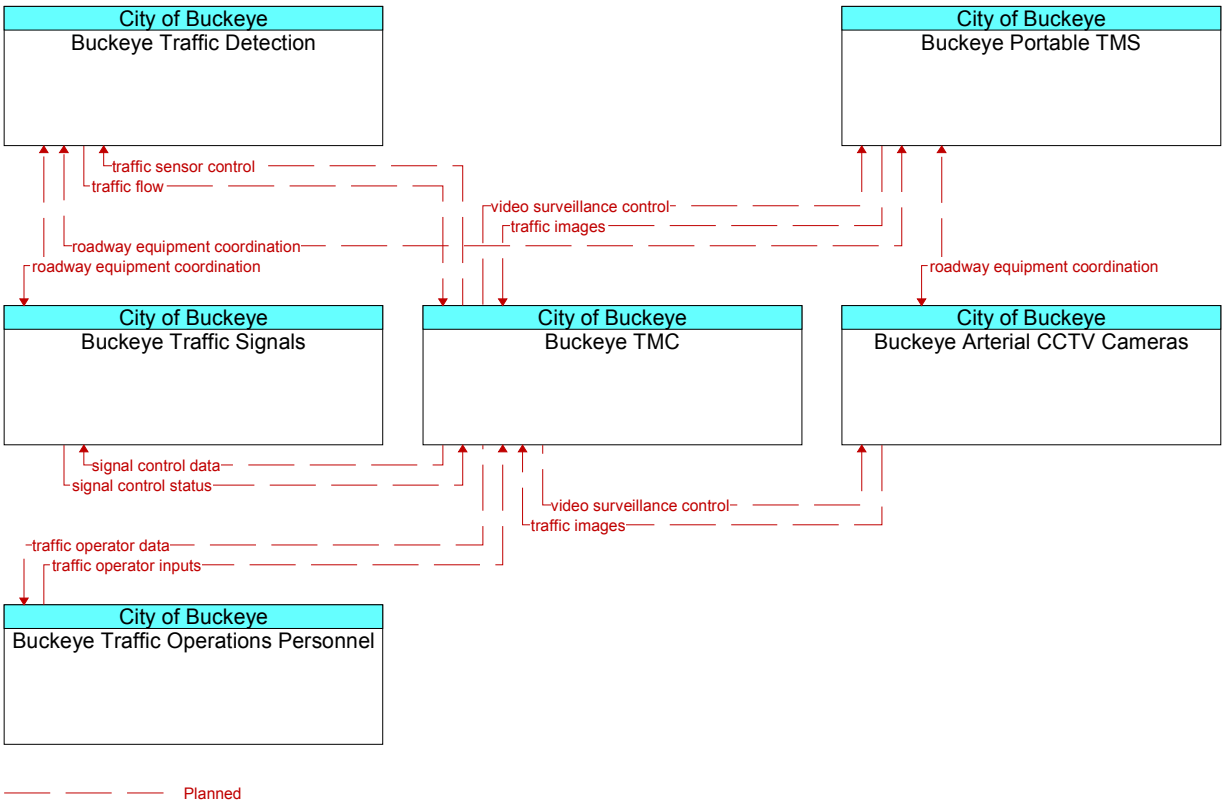

ATMS03 – Surface Street Control – Goodyear

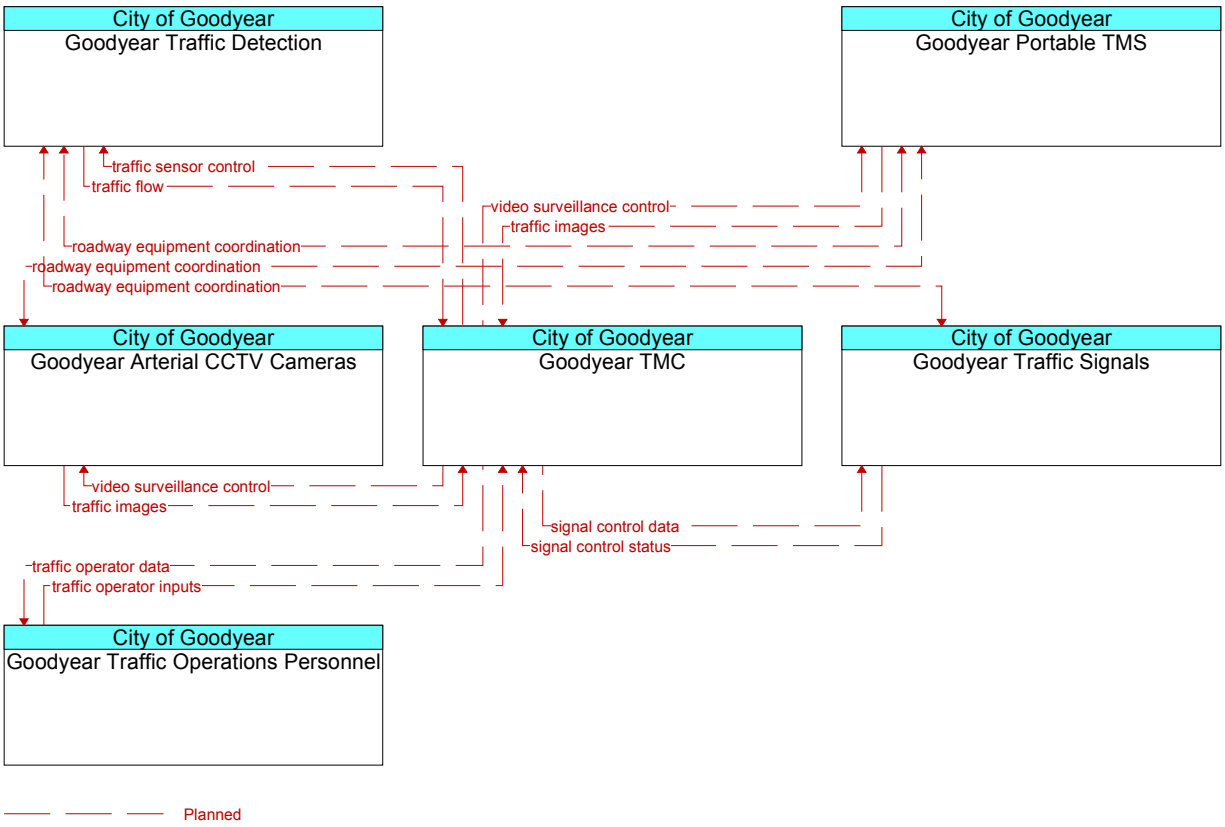

ATMS03 – Surface Street Control – MCDOT

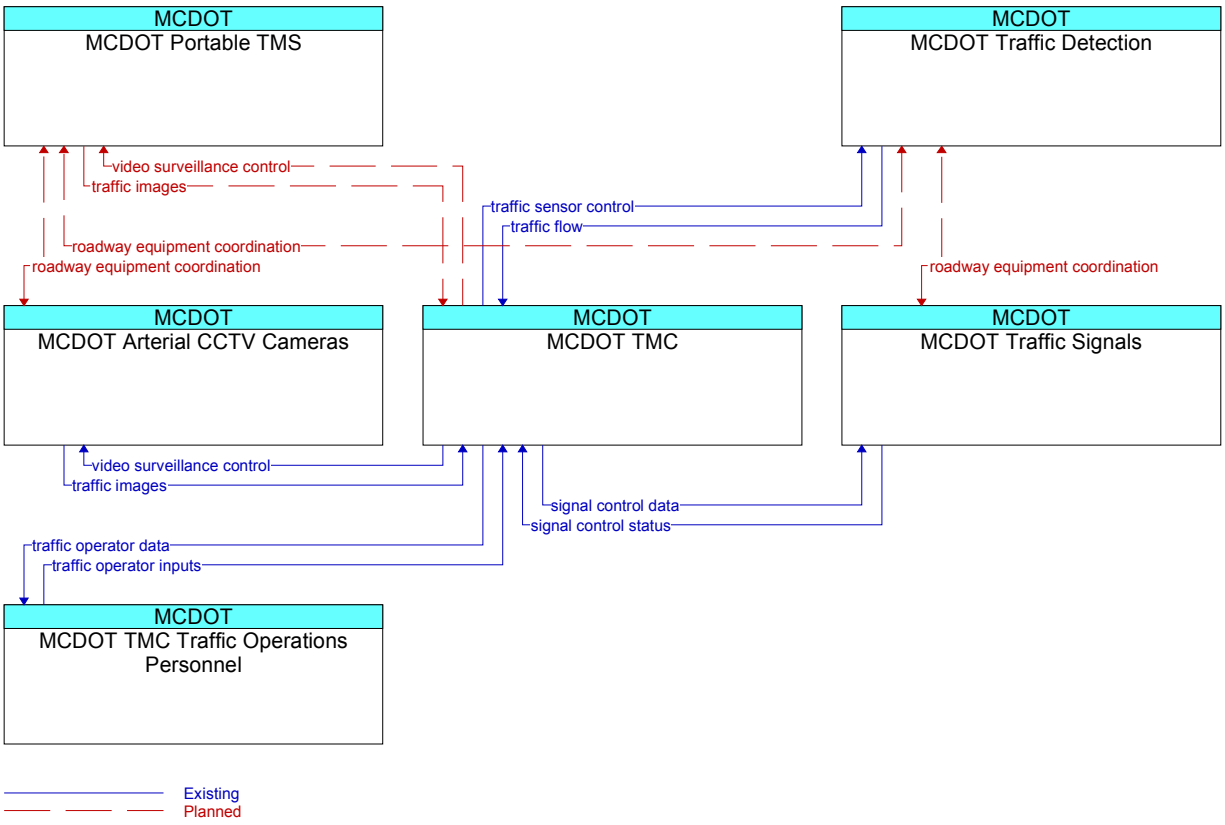

ATMS03 – Surface Street Control – Phoenix

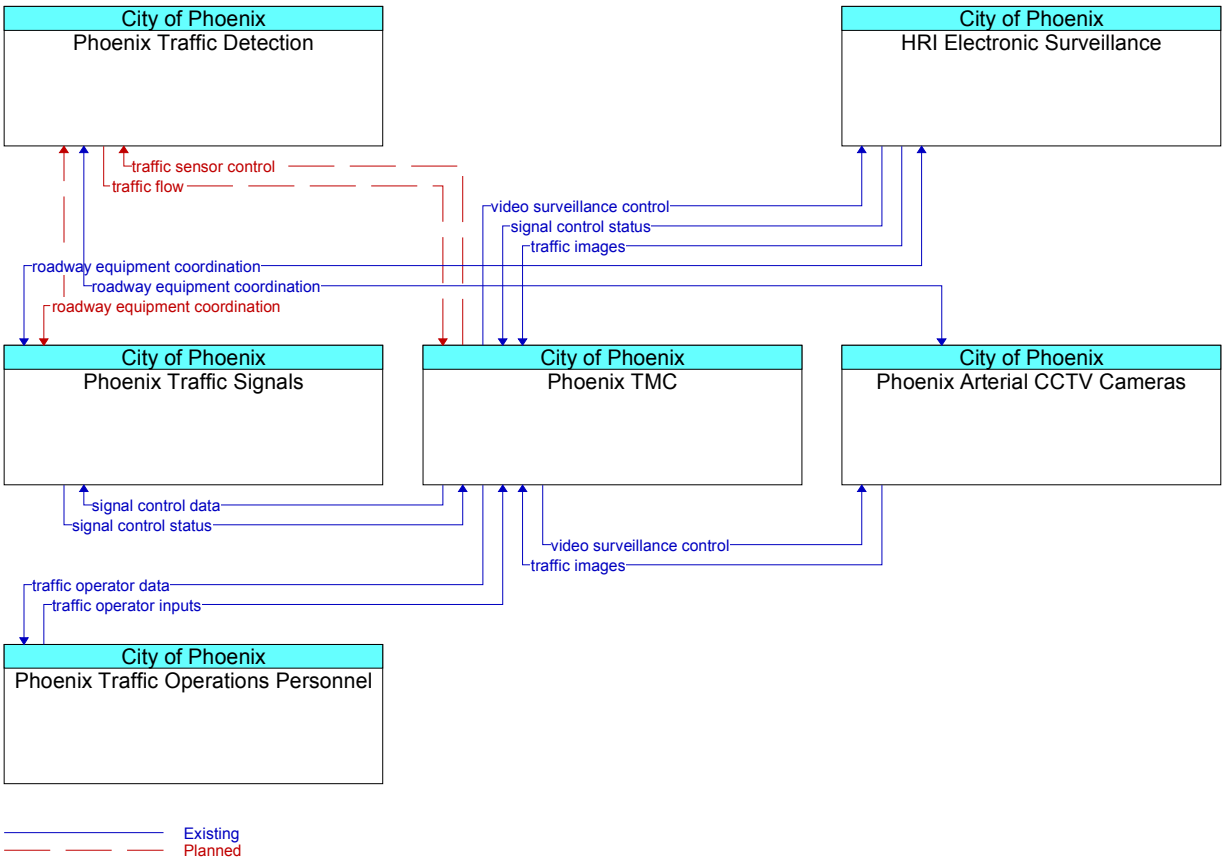

ATMS04 – Freeway Control – ADOT

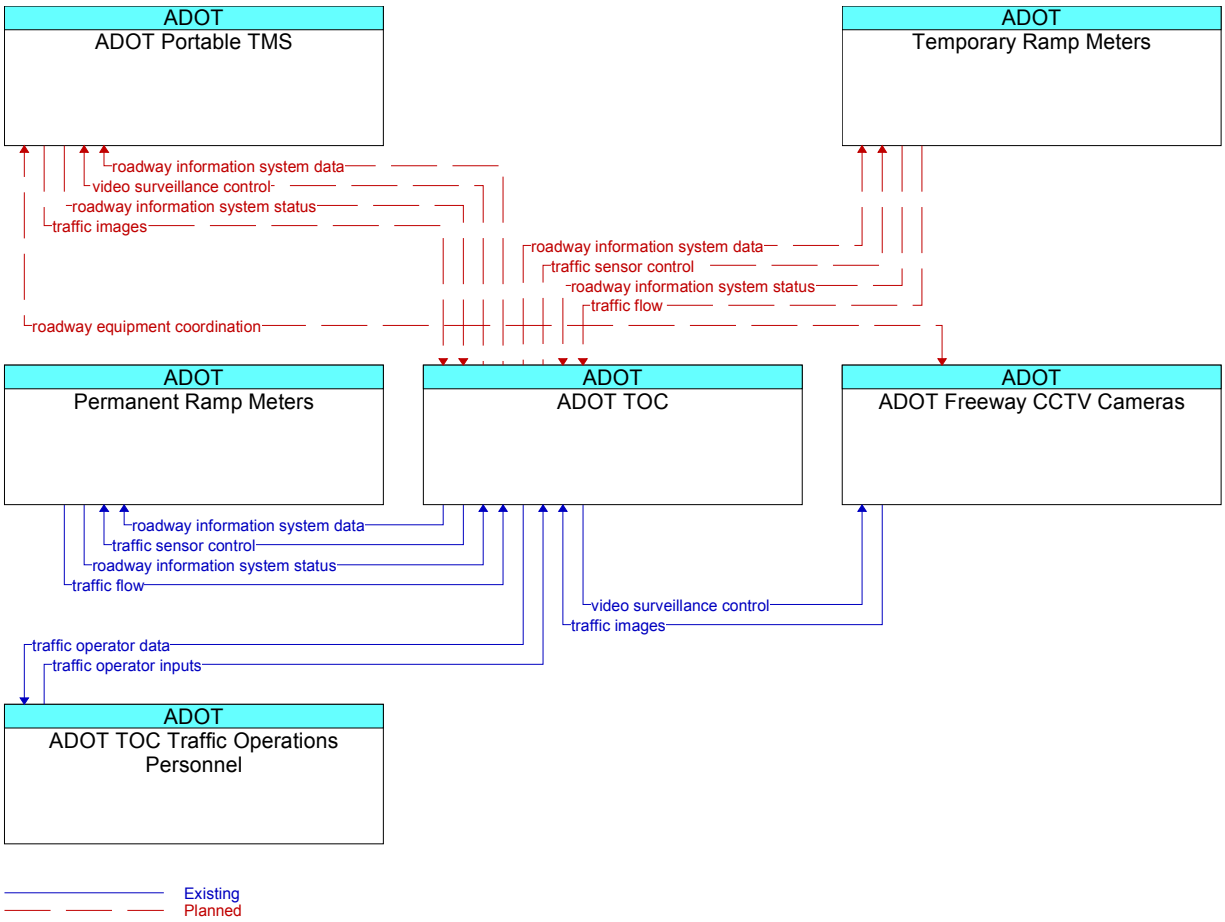

ATMS06 – Traffic Information Dissemination – ADOT

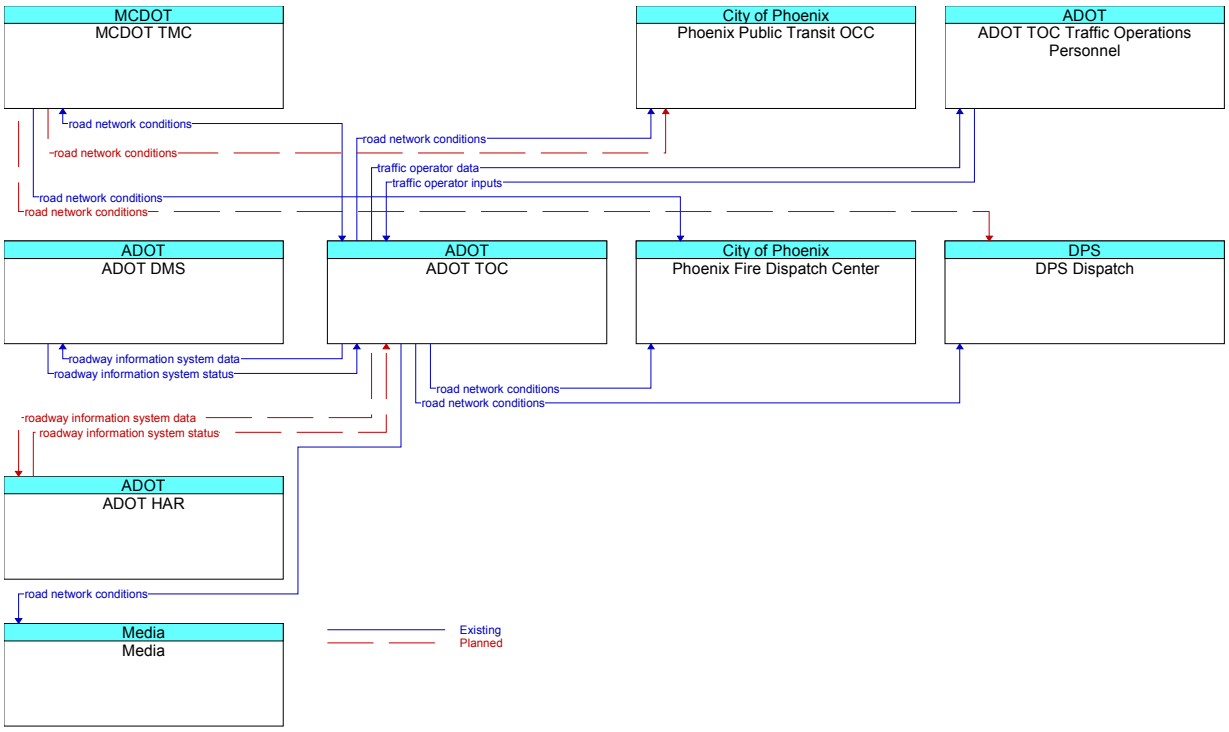

ATMS06 – Traffic Information Dissemination – Avondale

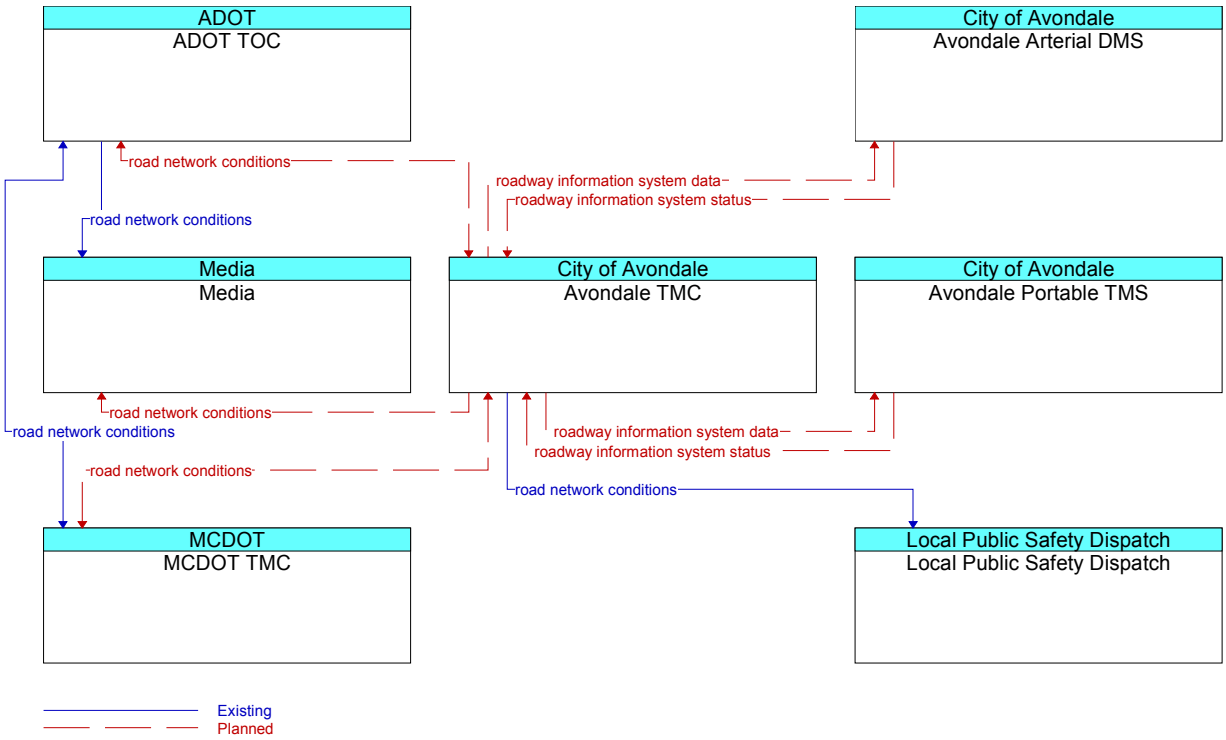

ATMS06 – Traffic Information Dissemination – Buckeye

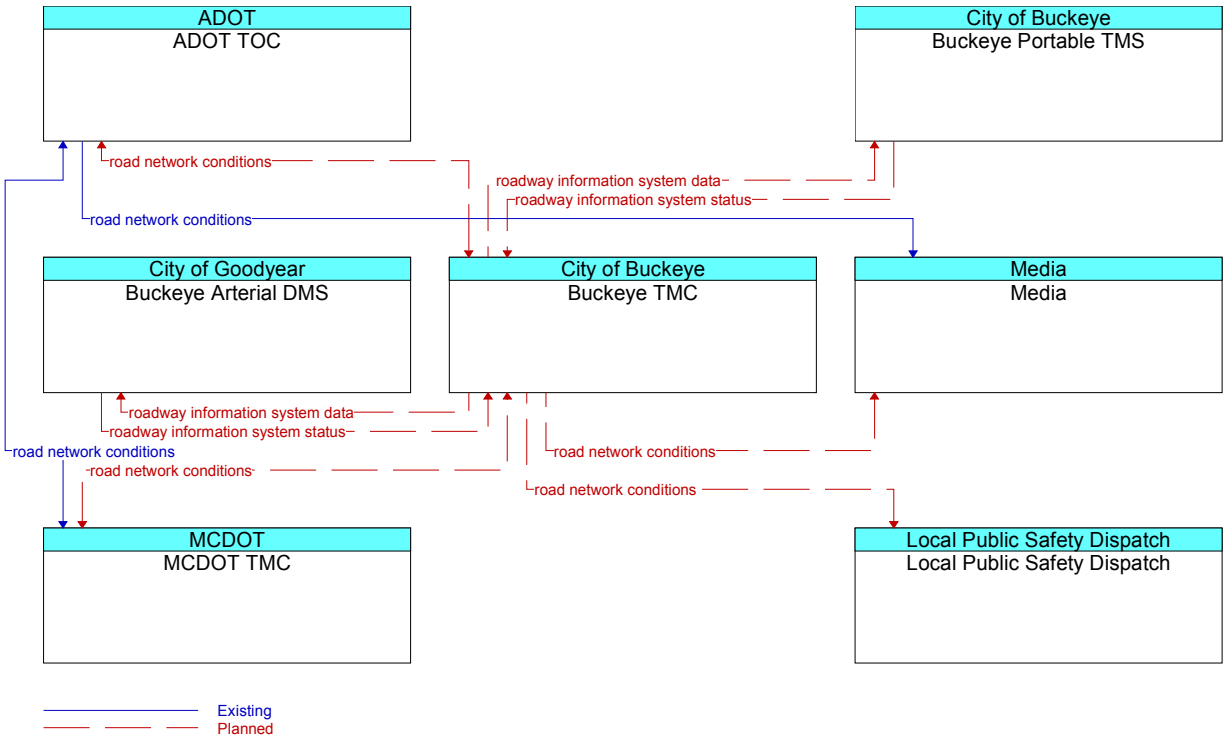

ATMS06 – Traffic Information Dissemination – Goodyear

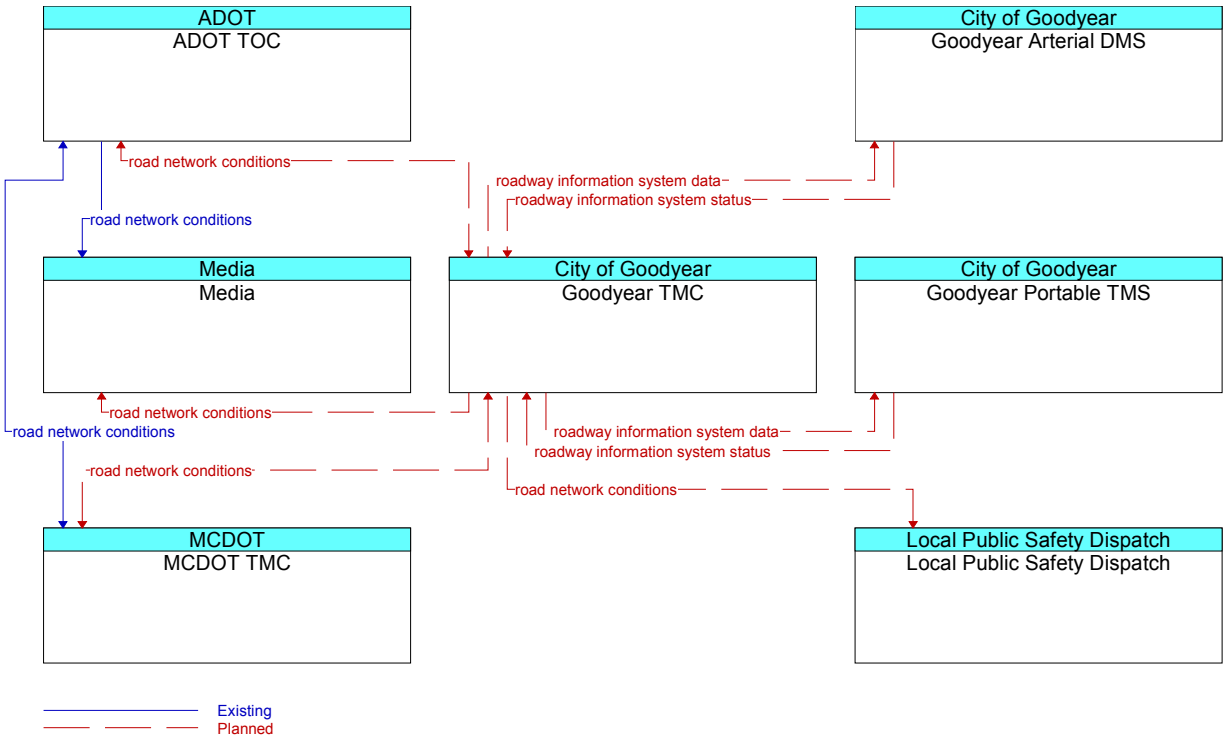

ATMS06 – Traffic Information Dissemination – MCDOT

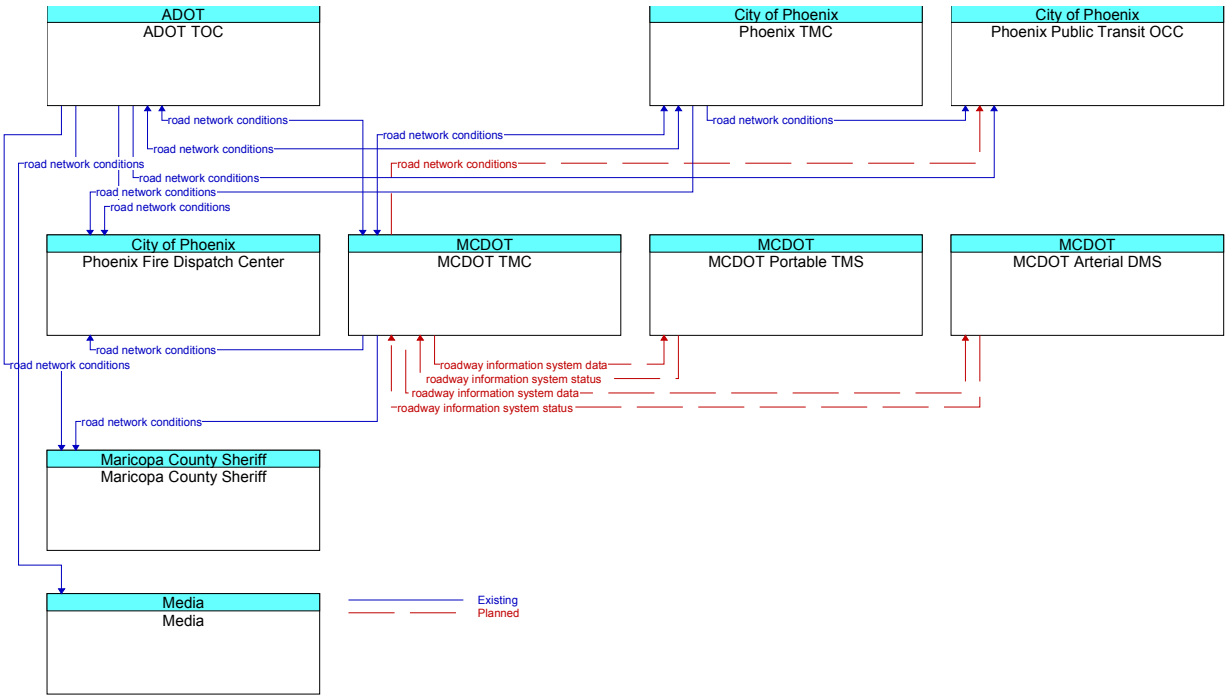

ATMS06 – Traffic Information Dissemination – Phoenix

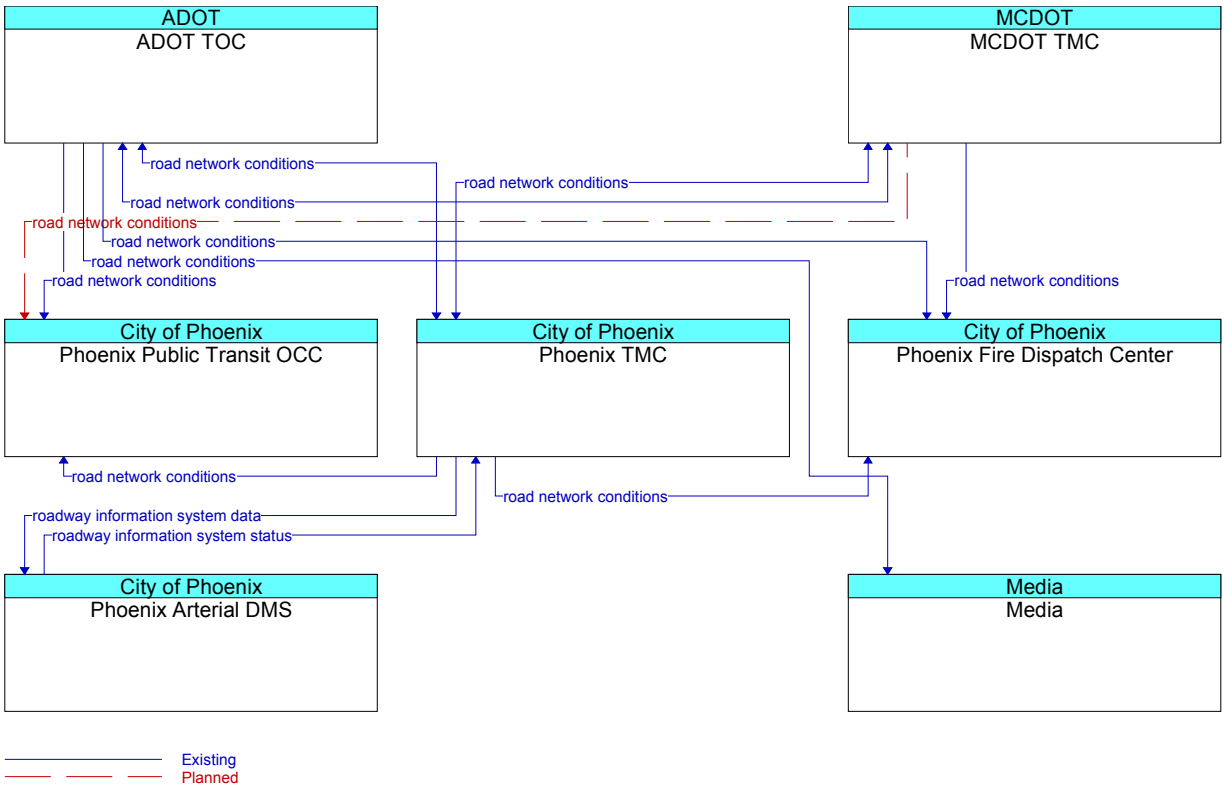

ATMS07 – Regional Traffic Management

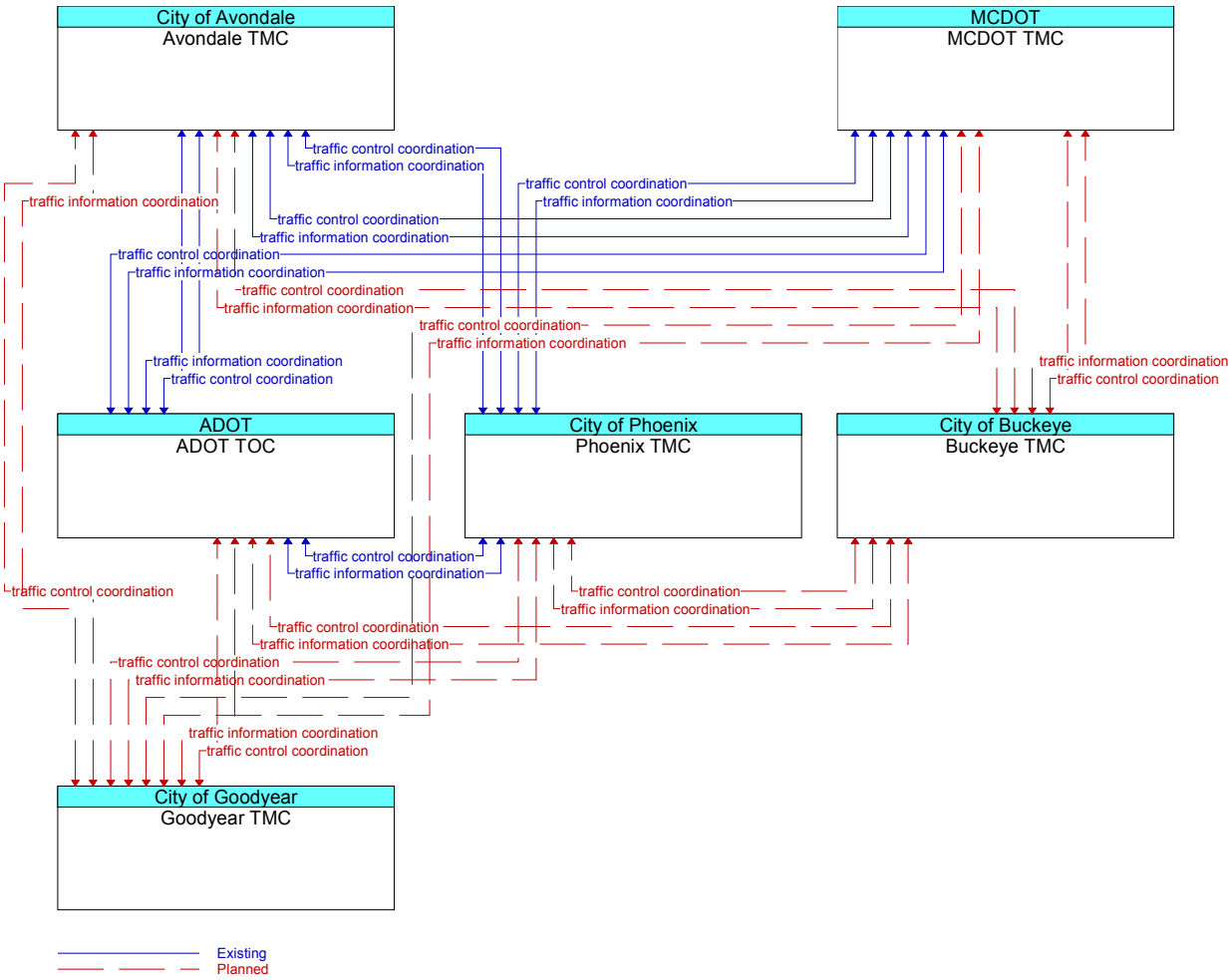

ATMS08 – Traffic Incident Management System – ADOT

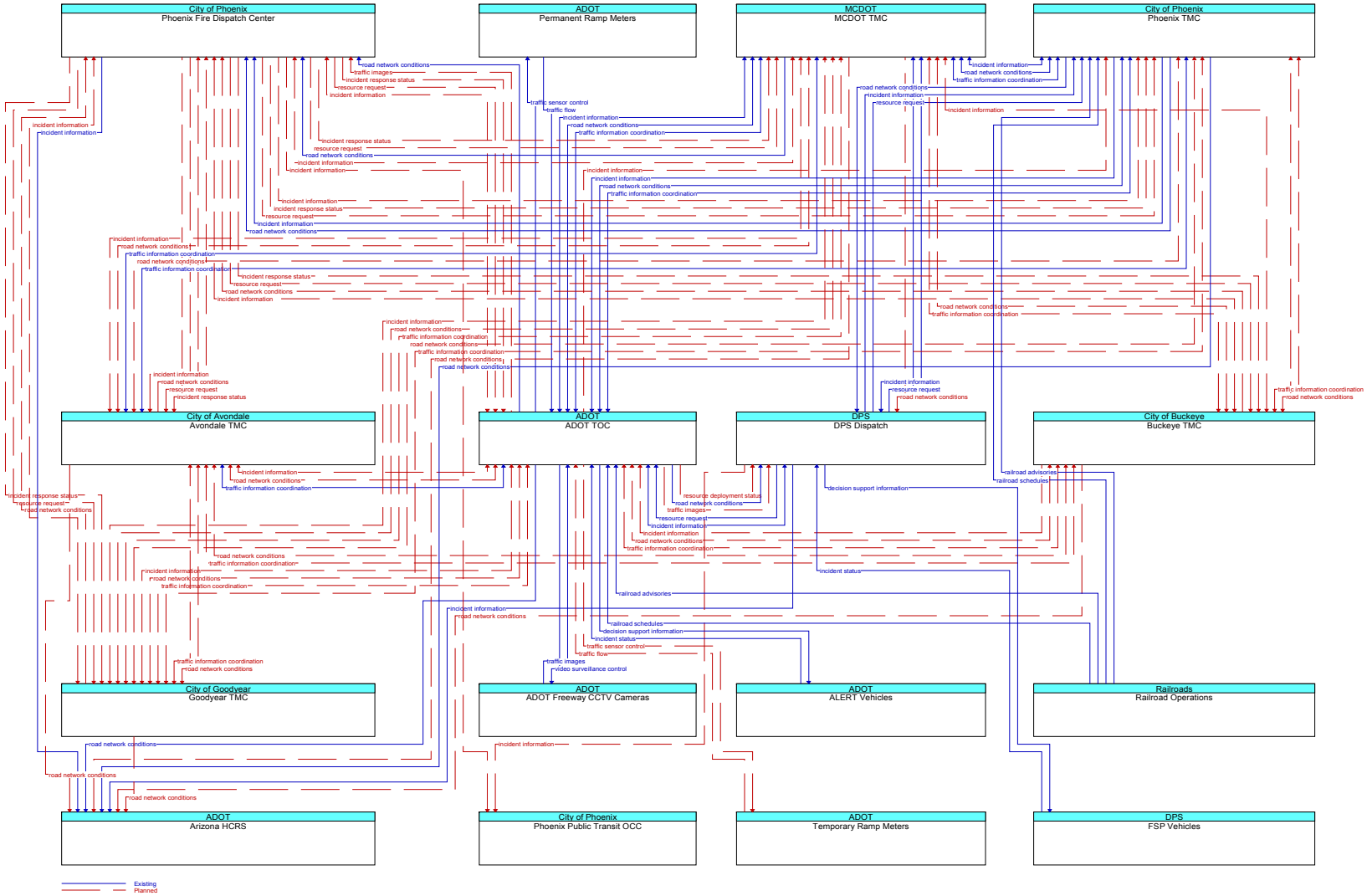

ATMS08 – Traffic Incident Management System – Avondale

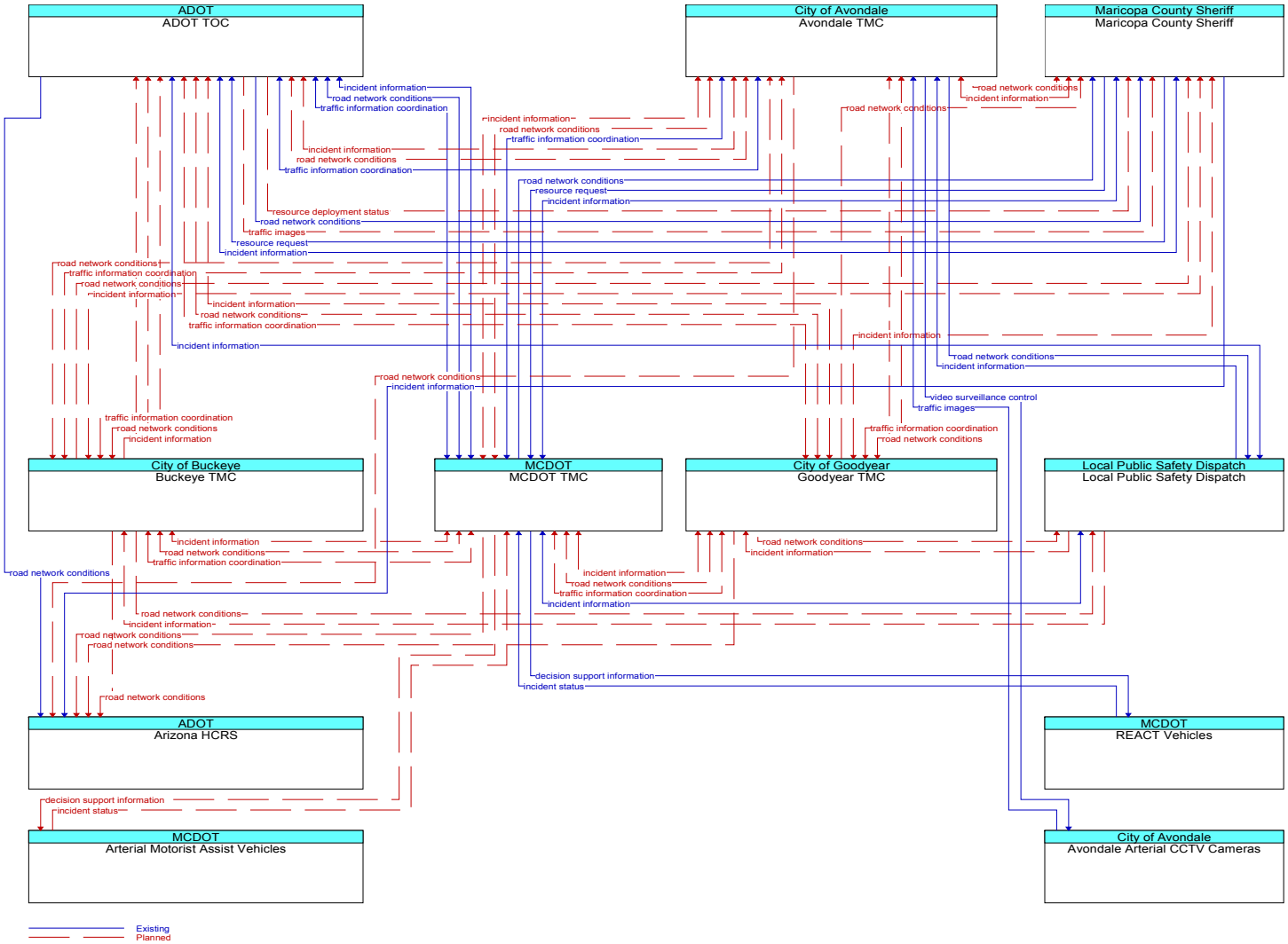

ATMS08 – Traffic Incident Management System – Buckeye

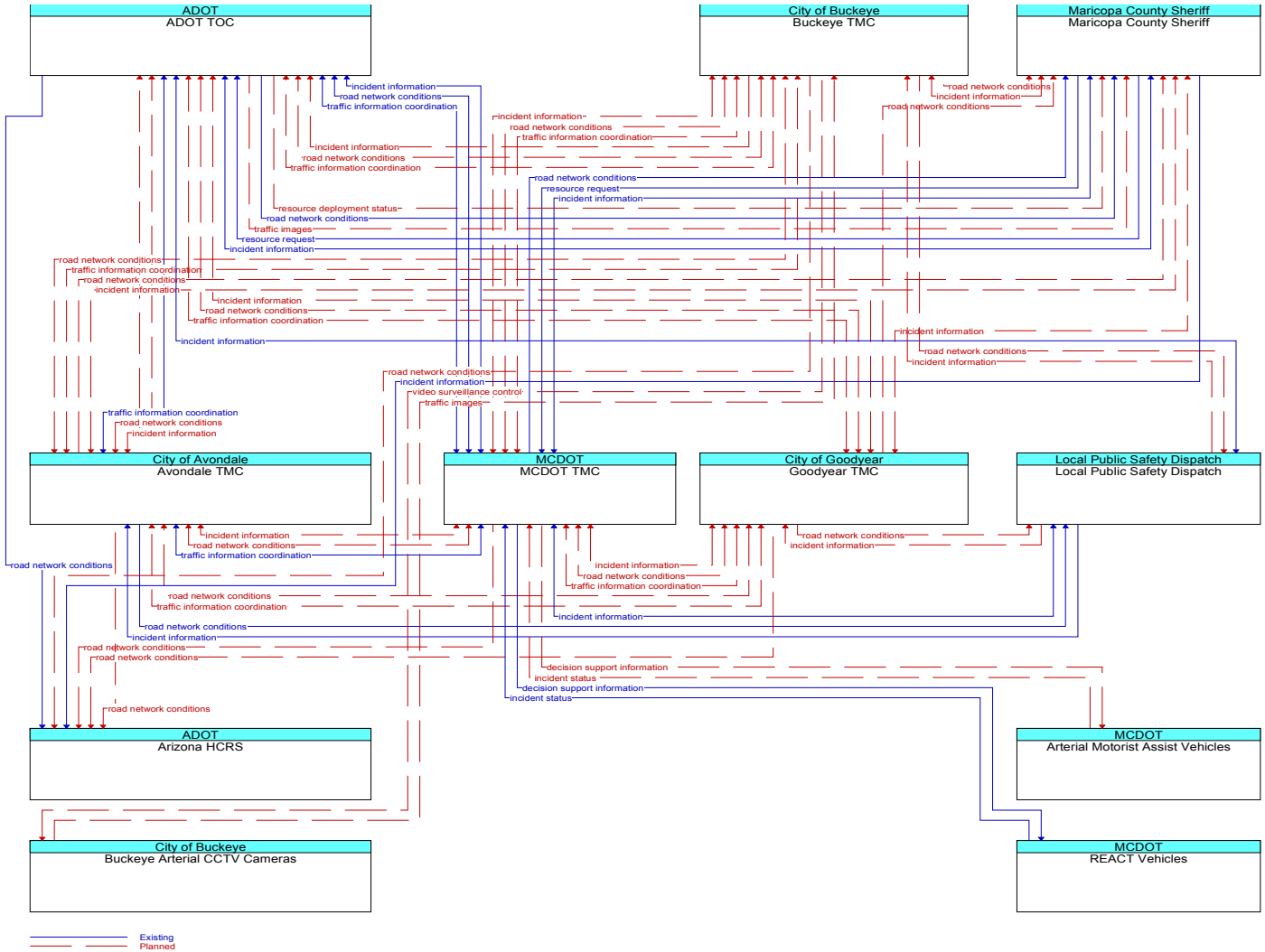

ATMS08 – Traffic Incident Management System – Goodyear

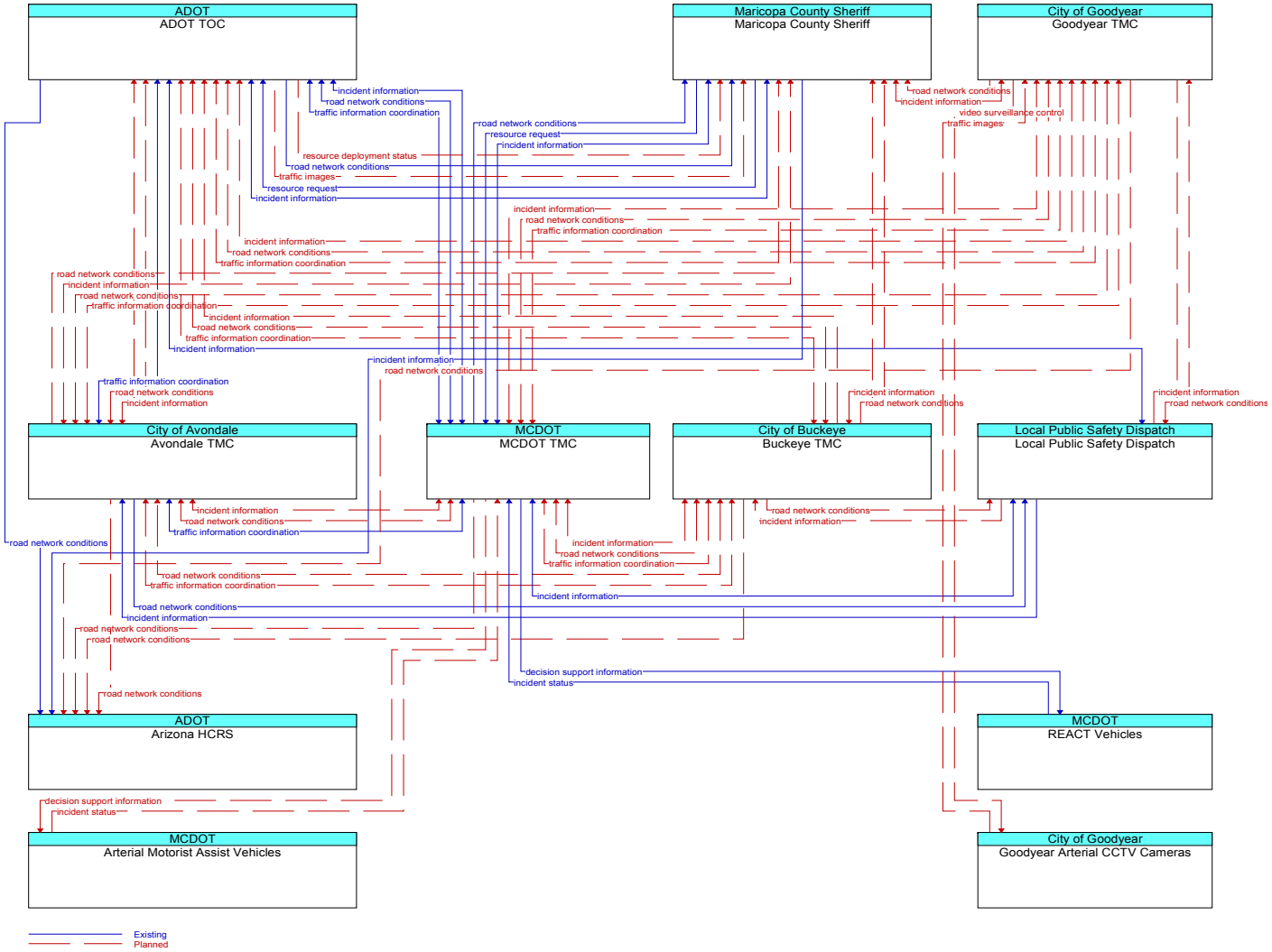

ATMS08 – Traffic Incident Management System – MCDOT

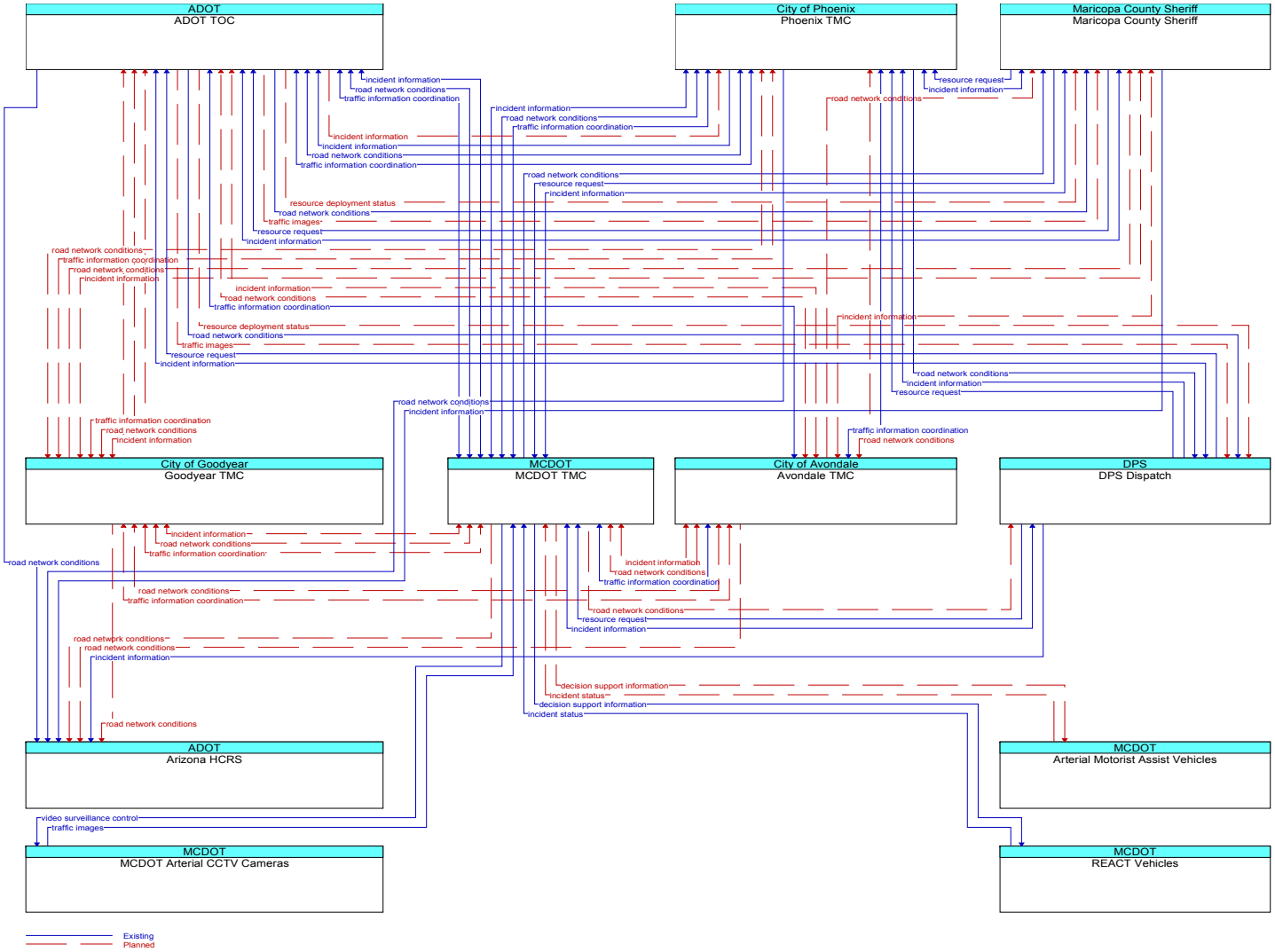

ATMS08 – Traffic Incident Management System – Phoenix

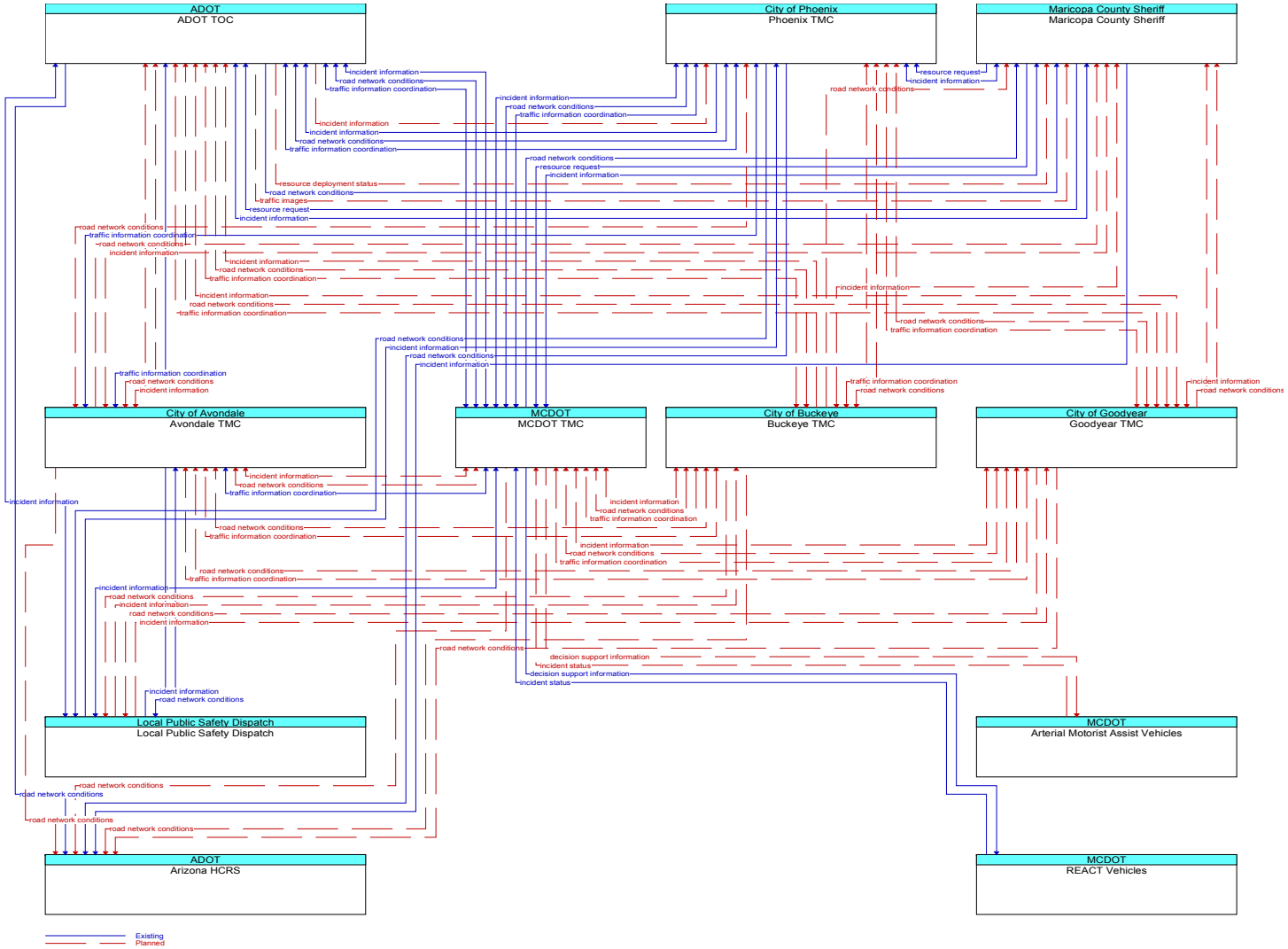

ATMS15 – Railroad Operations Coordination

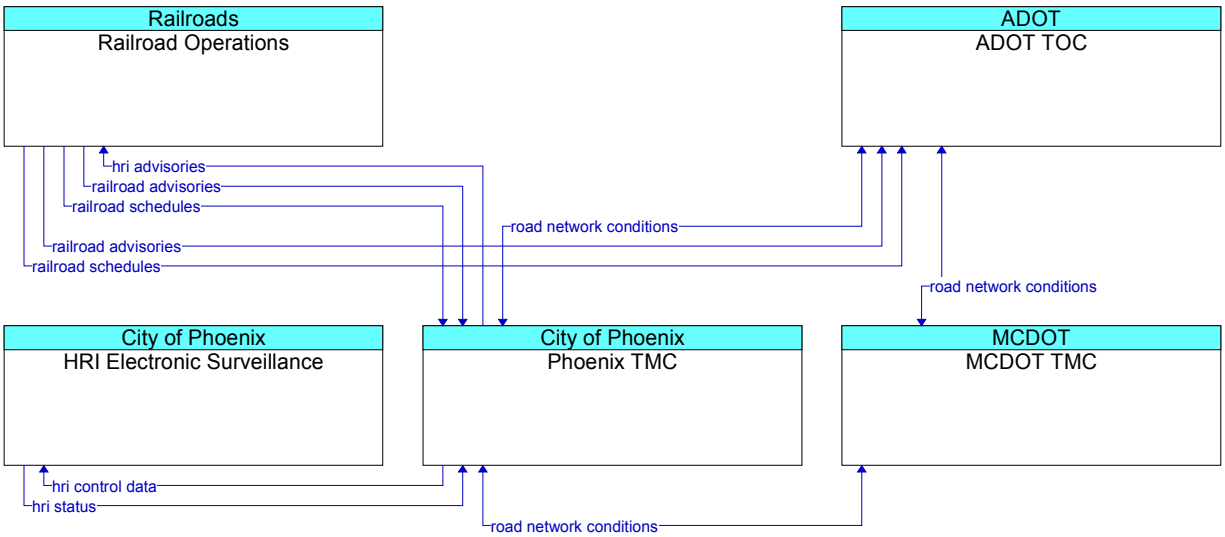

Existing

ATIS01 – Broadcast Traveler Information

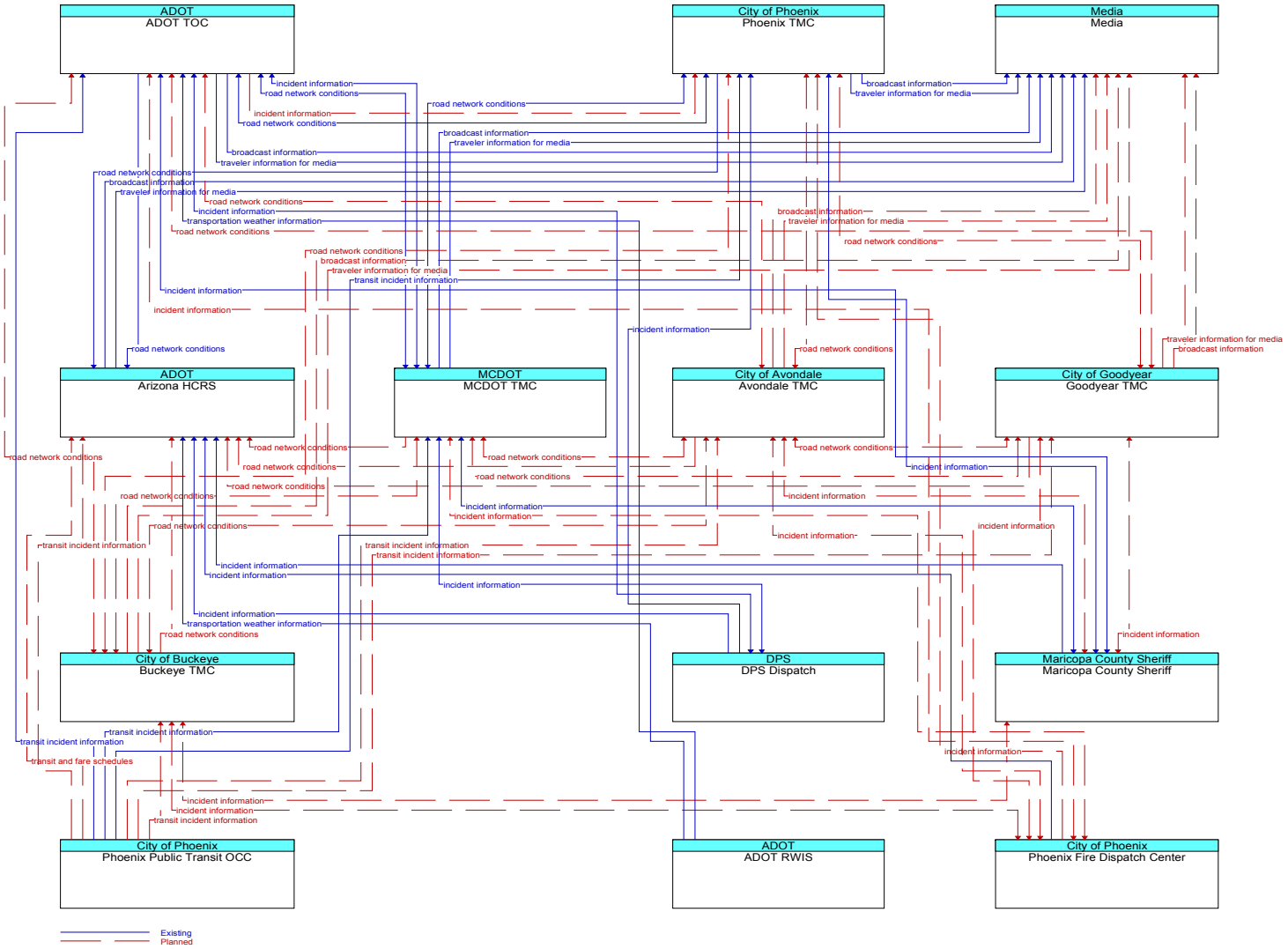

ATIS02 – Interactive Traveler Information – ADOT HCRS

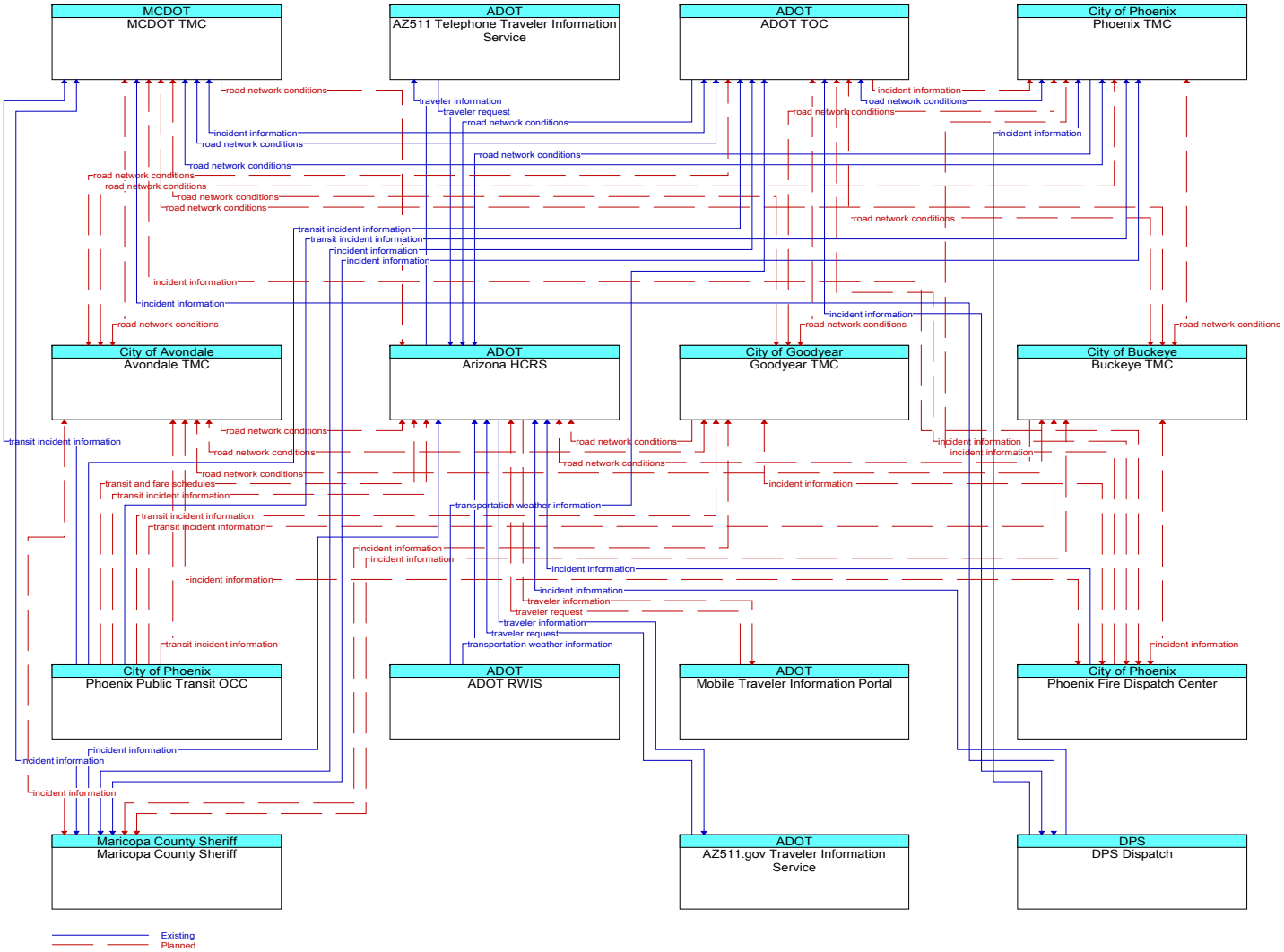

ATIS02 – Interactive Traveler Information – Phoenix Public Transit and Valley Metro

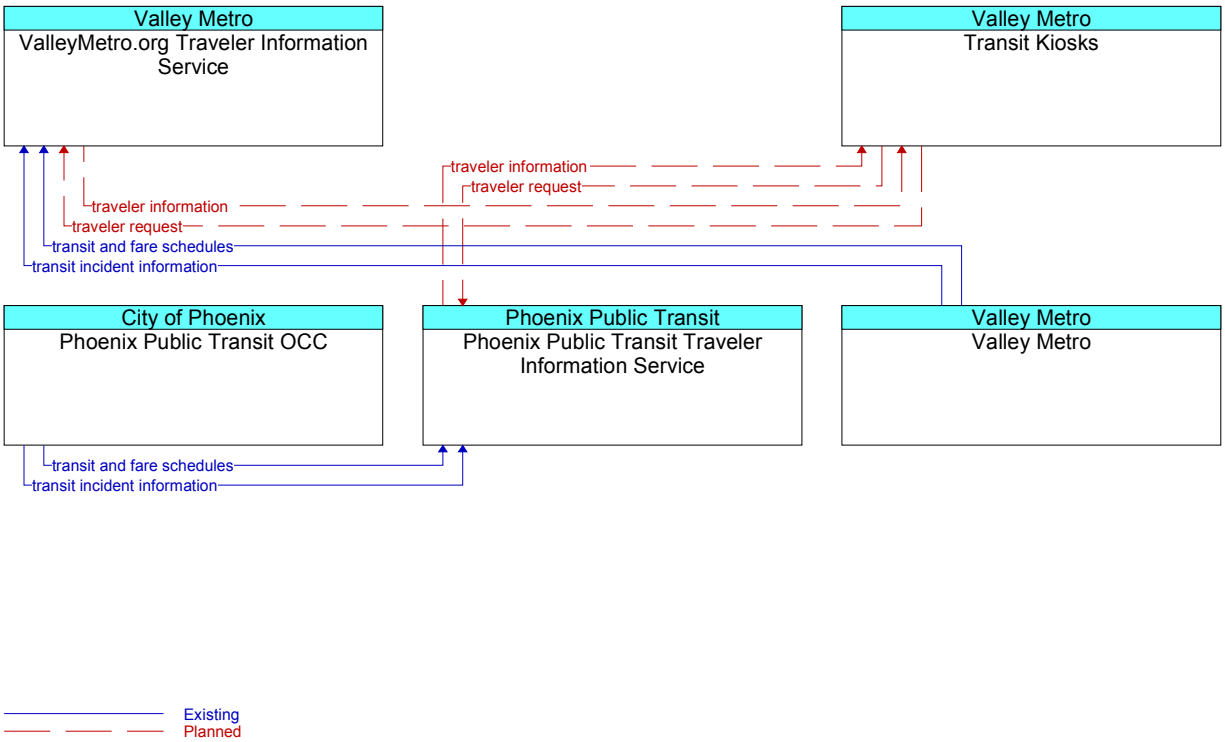

APTS1 – Transit Vehicle Tracking – Phoenix Public Transit

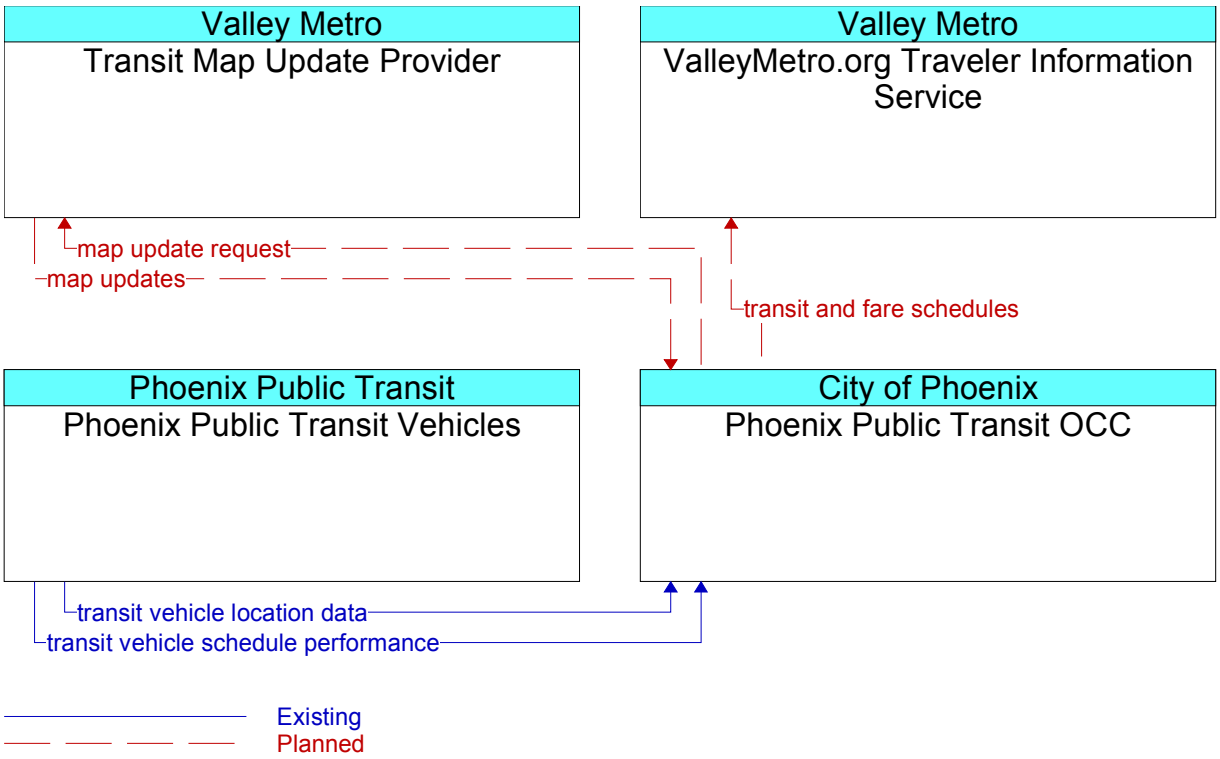

APTS1 – Transit Vehicle Tracking – Valley Metro

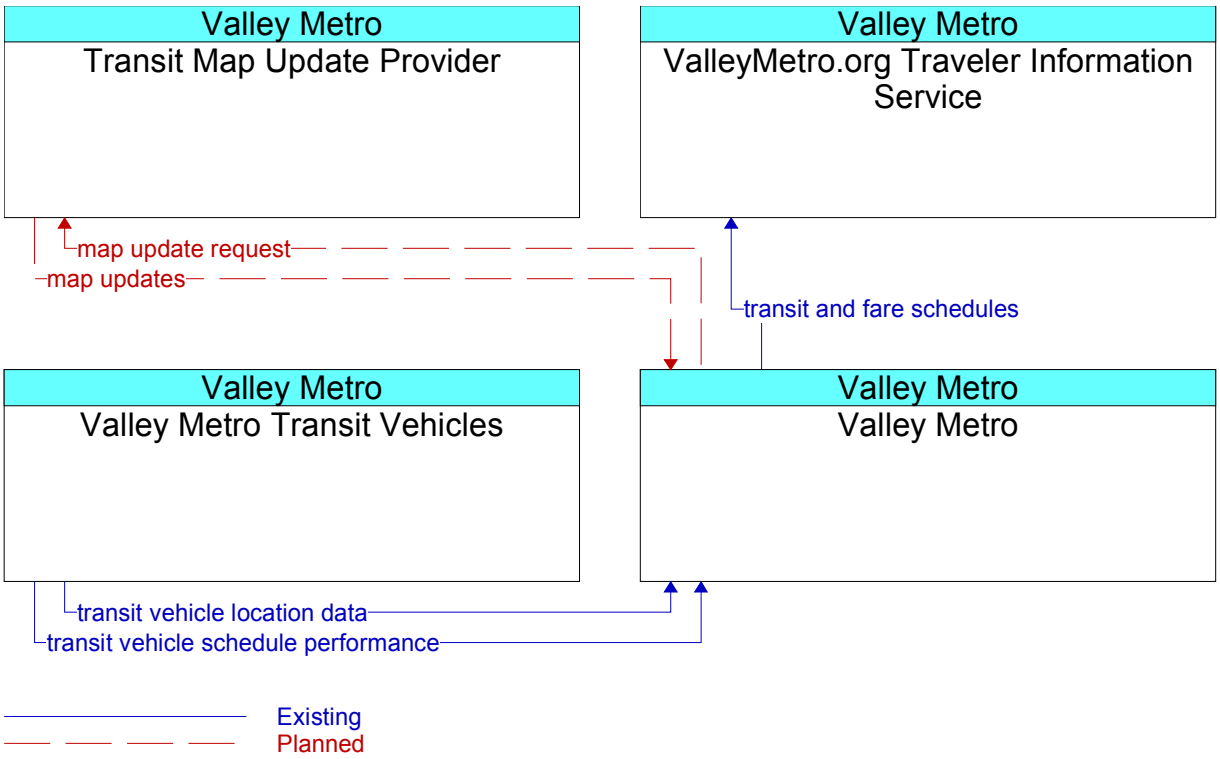

APTS2 – Transit Fixed-Route Operations – Phoenix Public Transit and Valley Metro

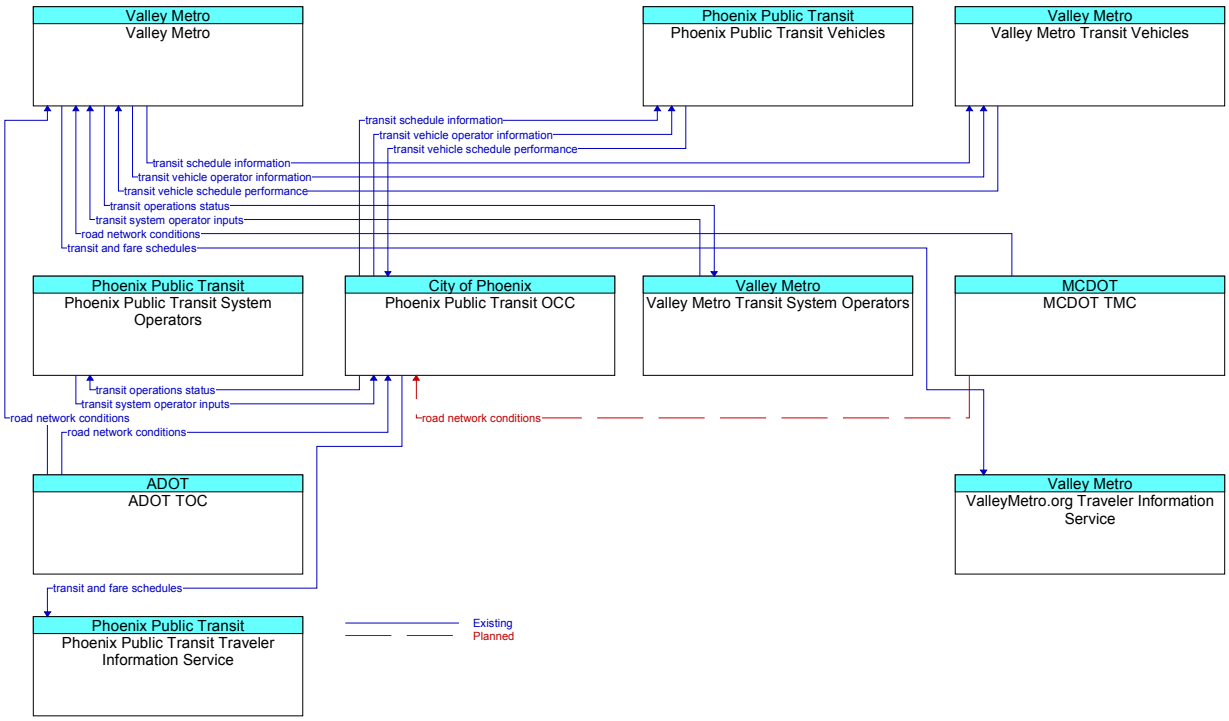

APTS8 – Transit Traveler Information – Phoenix Public Transit and Valley Metro

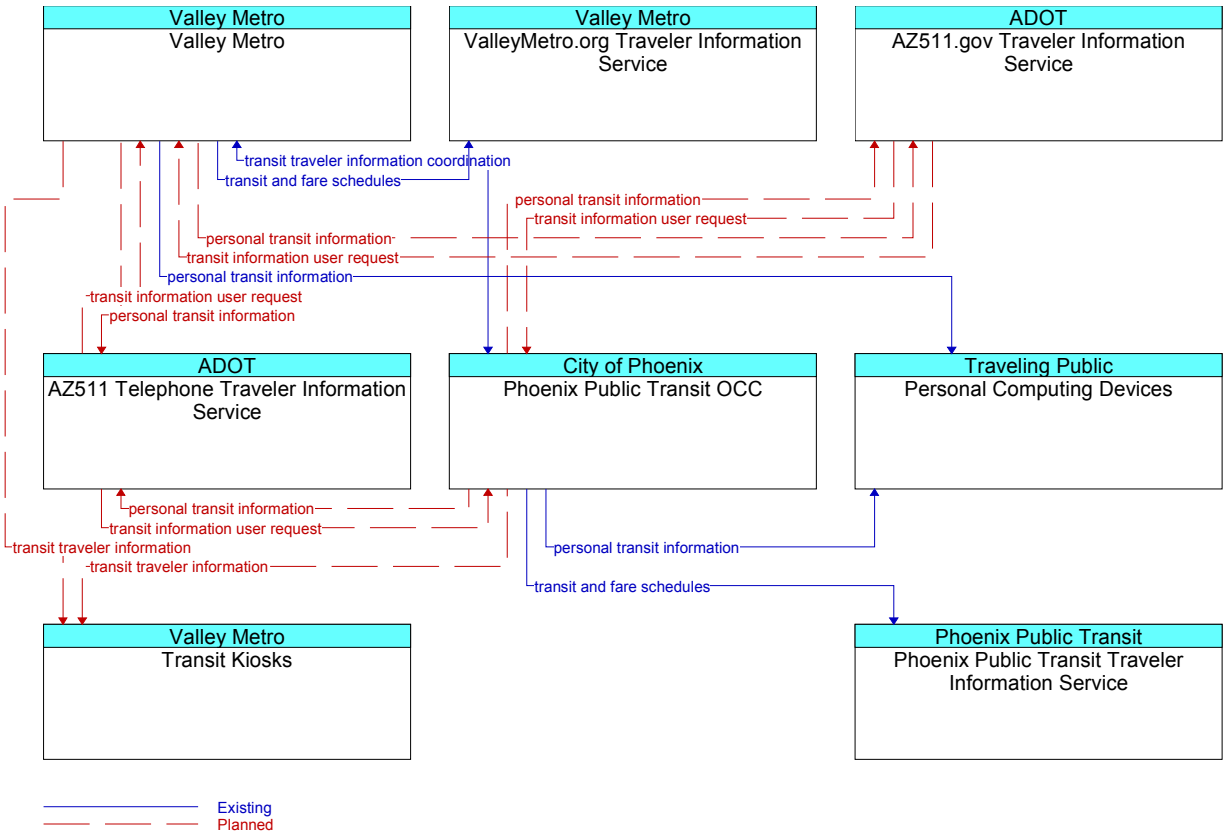

EM02 – Emergency Routing

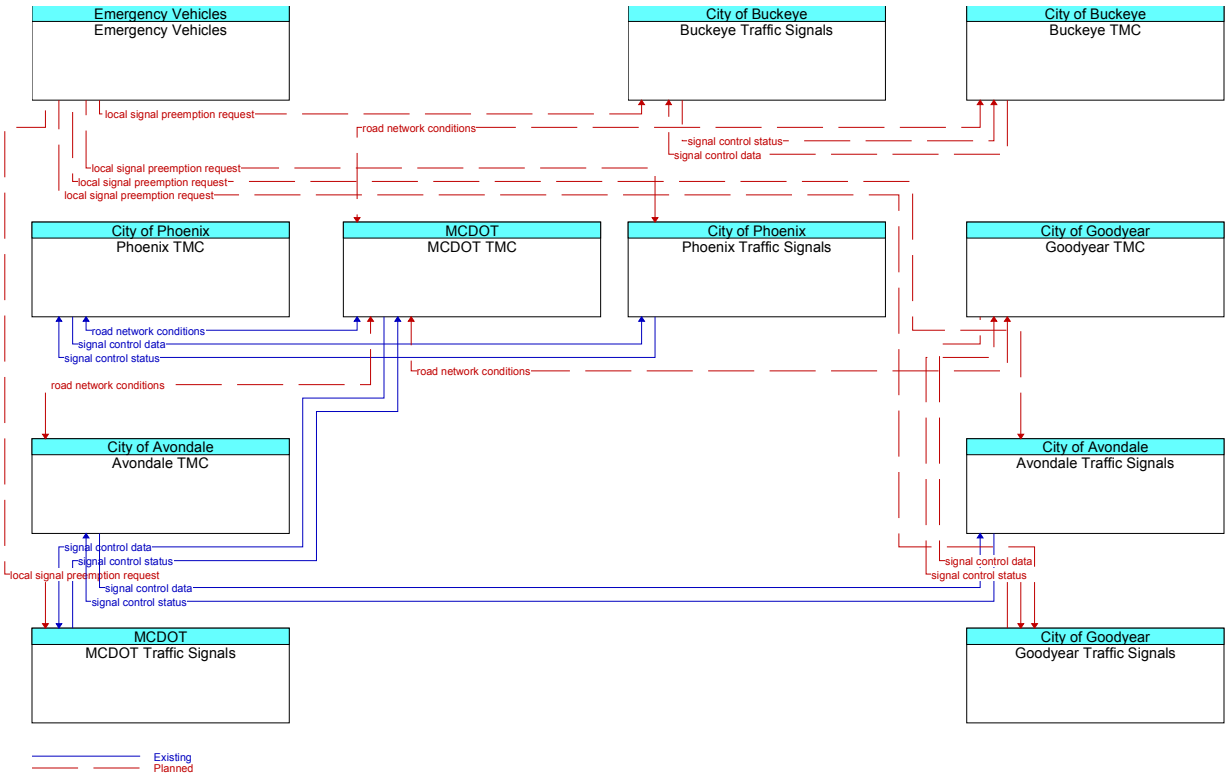

EM04 – Roadway Service Patrols – ALERT

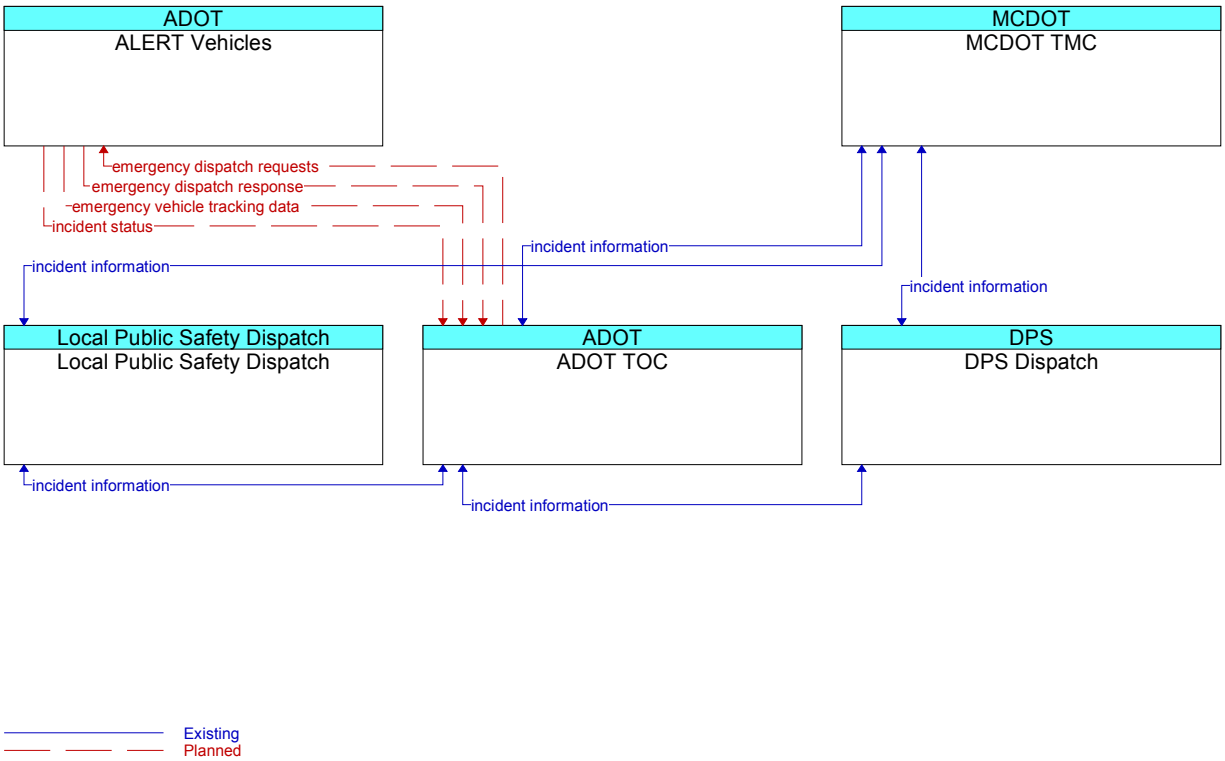

EM04 – Roadway Service Patrols – FSP

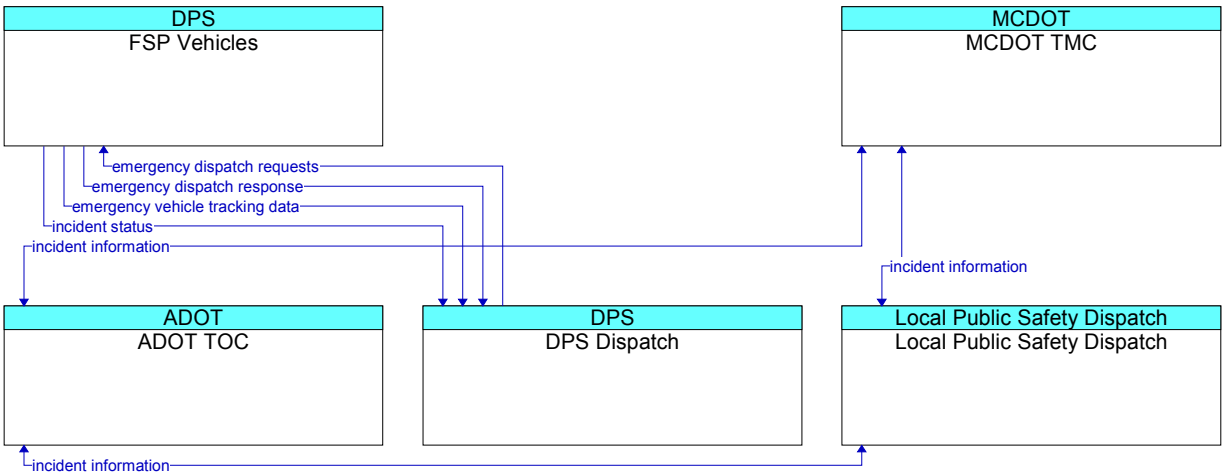

Existing

EM04 – Roadway Service Patrols – REACT and Arterial Motorist Assist

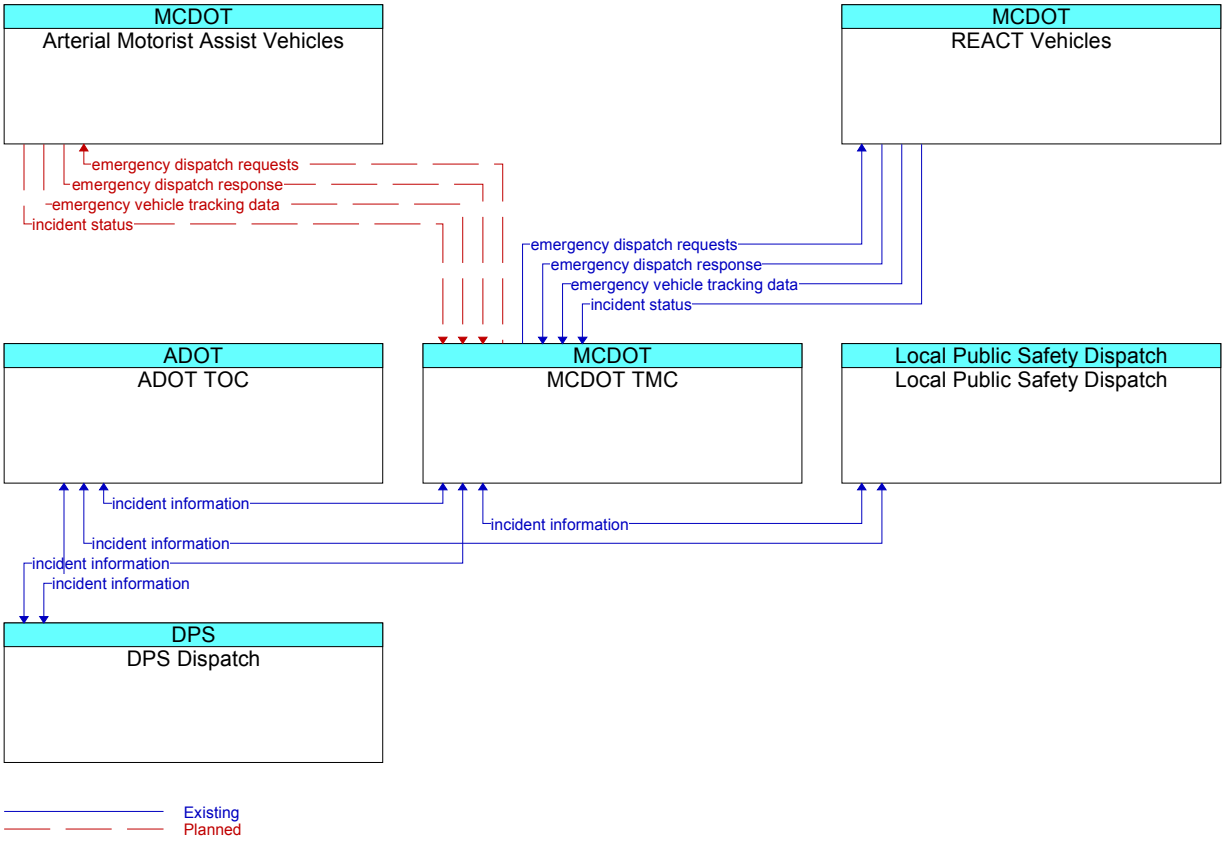

MC08 – Work Zone Management – ADOT

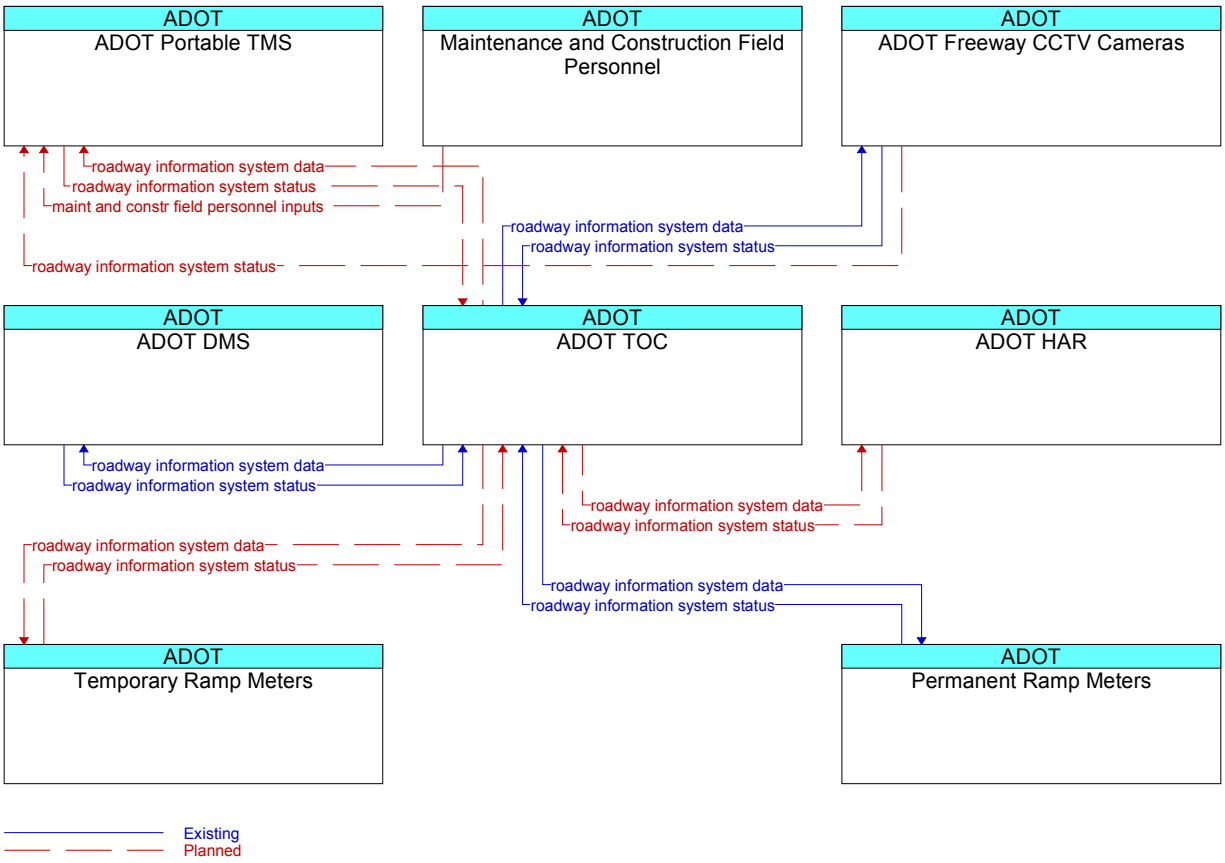

MC08 – Work Zone Management – Avondale

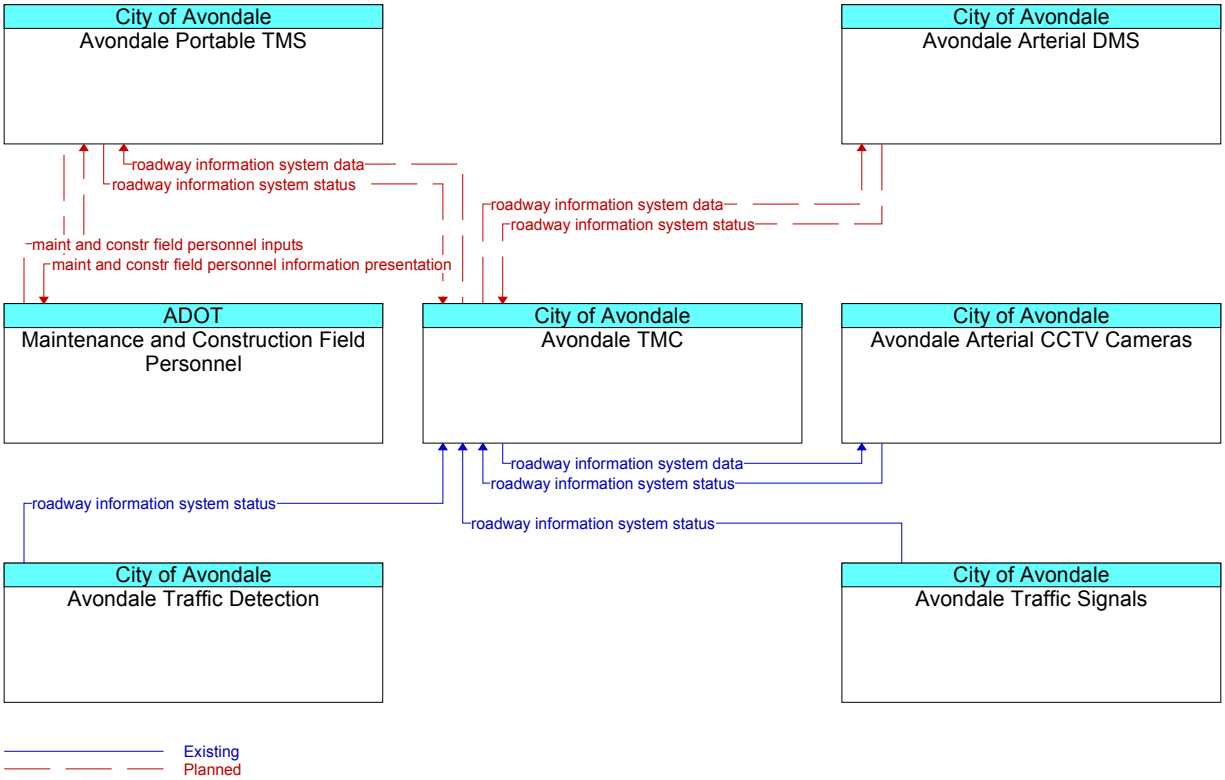

MC08 – Work Zone Management – Buckeye

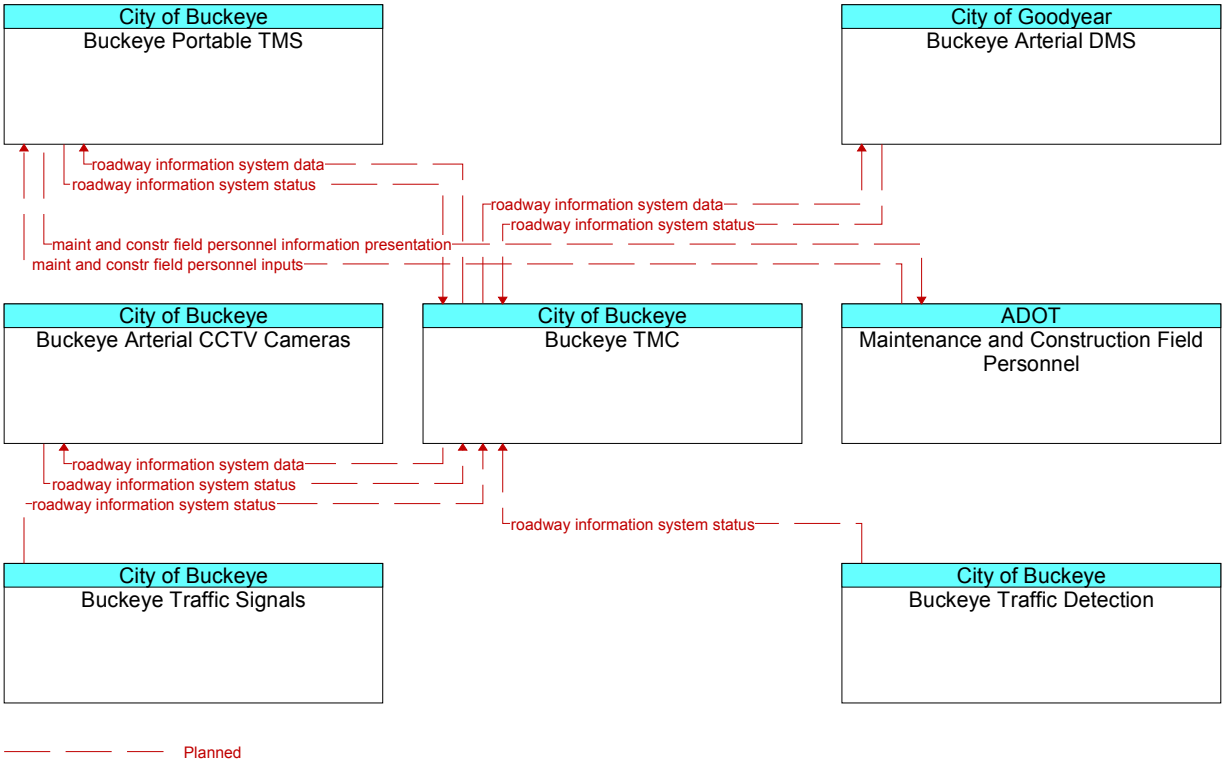

MC08 – Work Zone Management – Goodyear

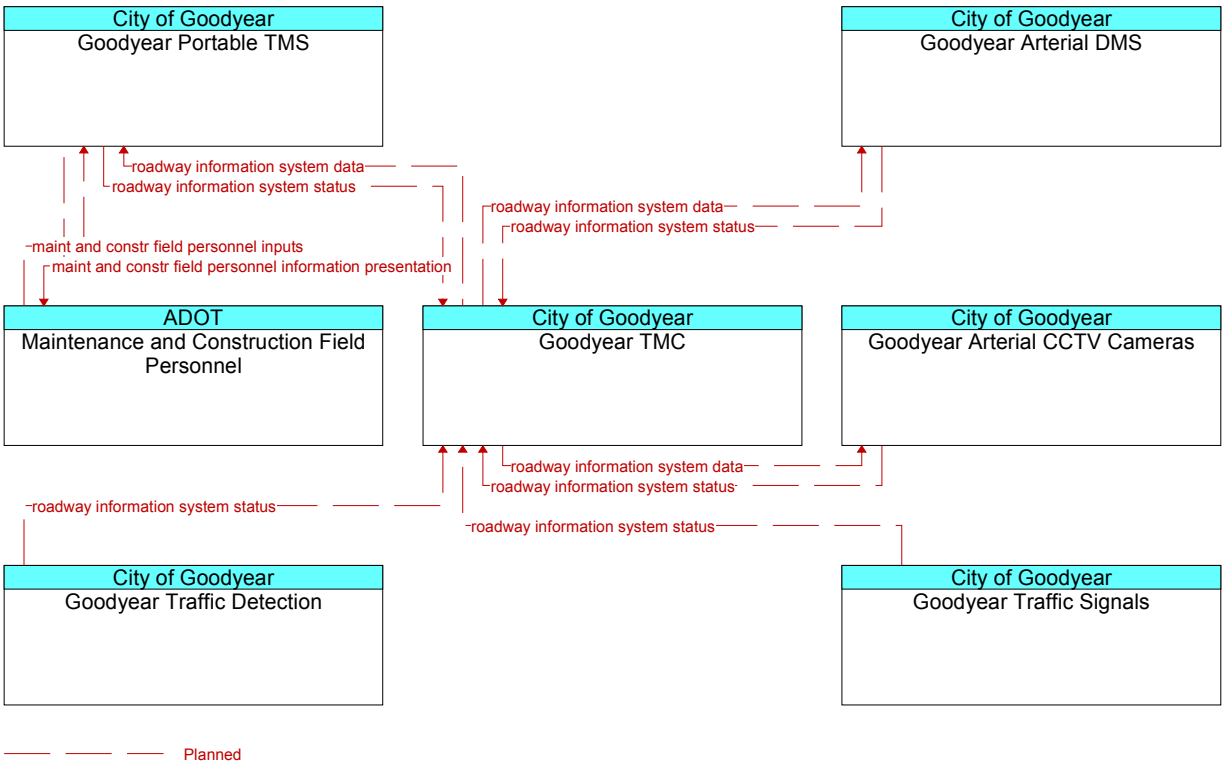

MC08 – Work Zone Management – MCDOT

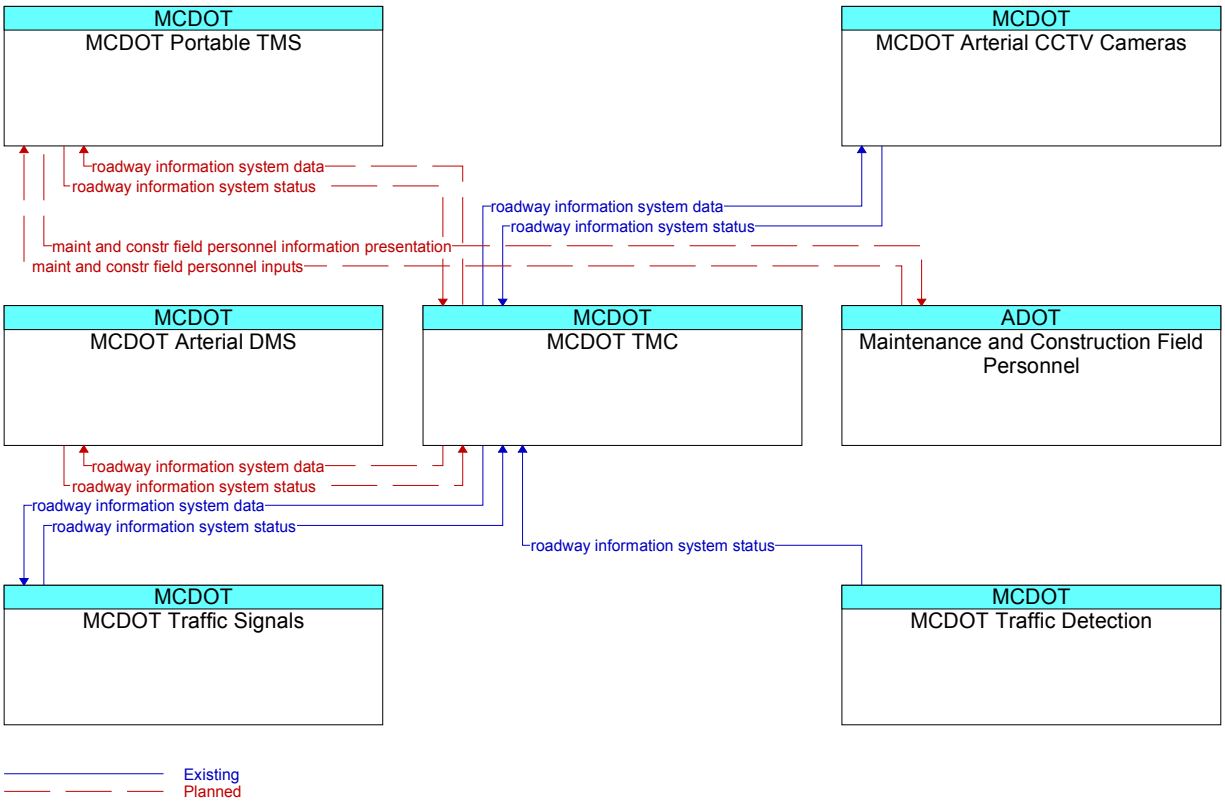

MC08 – Work Zone Management – Phoenix

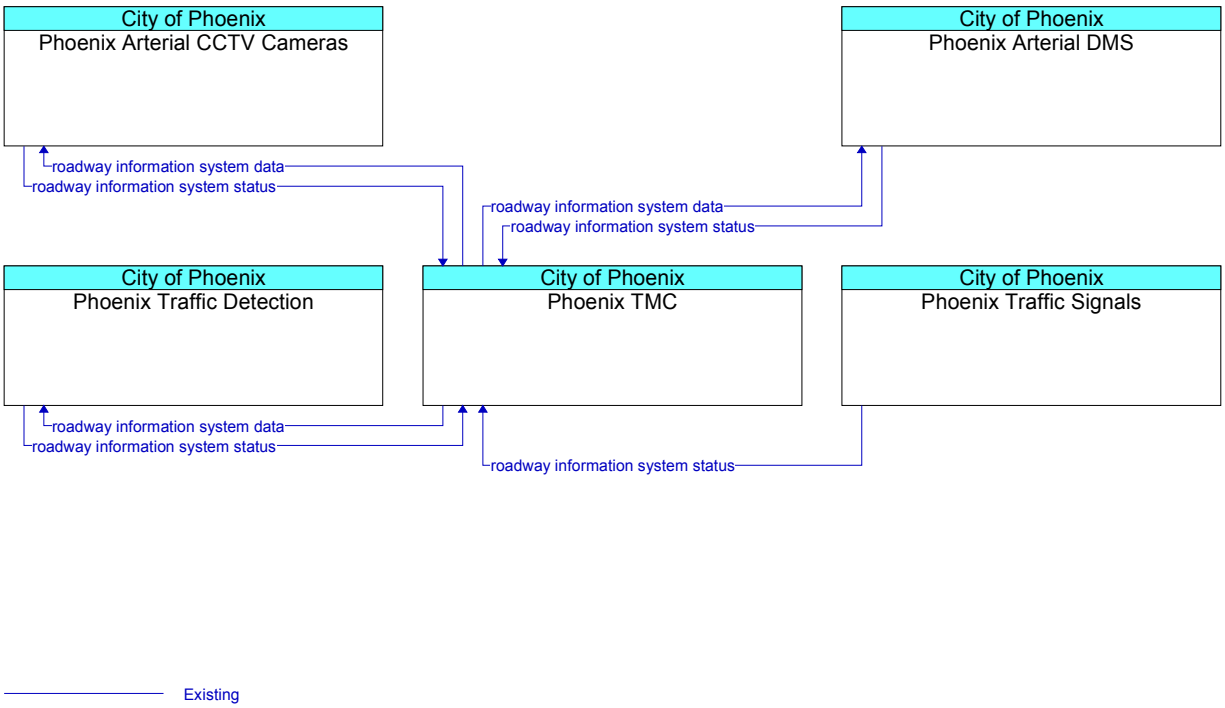
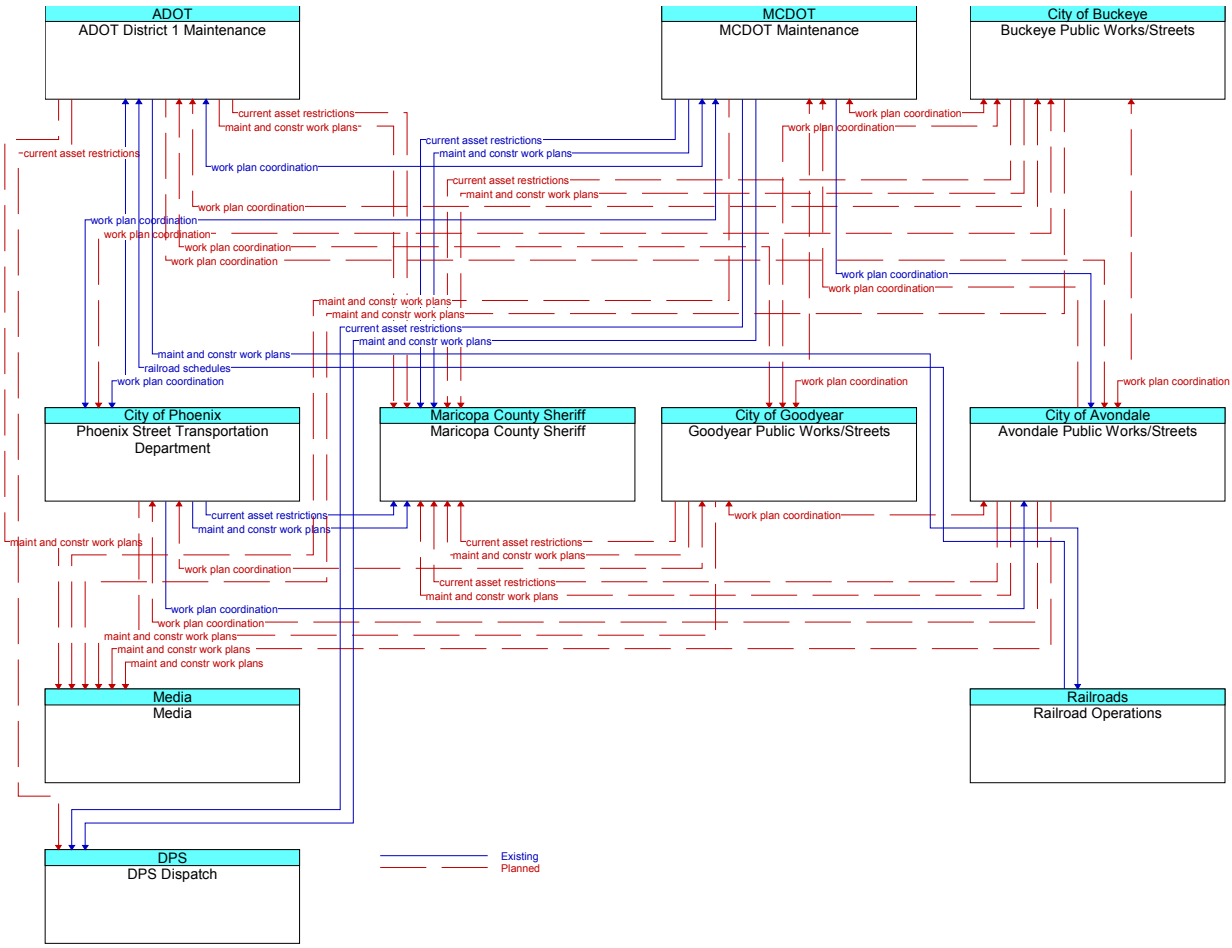
MC10 – Maintenance and Construction Activity Coordination