UNIFORM STANDARD SPECIFICATIONS for PUBLIC WORKS CONSTRUCTION

SPONSORED and DISTRIBUTED by the

1998
ARIZONA
(Includes revisions through 1998)

FOREWORD

Publication of these Uniform Standard Specifications for Public Works Construction fulfills the goal of a group of agencies who joined forces in 1966 to produce such a set of documents. Subsequently, in the interest of promoting county-wide acceptance and use of these standards, the Maricopa Association of Governments accepted their sponsorship and the responsibility of keeping them current and viable.

These specifications, representing the best professional thinking of representatives of several Public Works Departments, reviewed and refined by members of the construction industry, were written to fulfill the need for uniform rules governing public works construction performed for Maricopa County and the various cities and public agencies in the county. It further fulfills the need for adequate standards by the smaller communities and agencies who could not afford to promulgate such standards for themselves.

A uniform set of specifications, updated and embracing the most modern materials and construction techniques will redound to the benefit of the public and the private contracting industry. Uniform specifications will eliminate conflicts and confusion, lower construction costs, and encourage more competitive bidding by private contractors.

The Uniform Standard Specifications for Public Works Construction will be revised periodically and reprinted to reflect advanced thinking and the changing technology of the construction industry. To this end a specifications committee has been established as a permanent organization to continually study and recommend changes to the specifications. Interested parties may address suggested changes and questions to:

Standard Specifications & Detail Committee
c/o Maricopa Association of Governments
302 North 1st Avenue, Suite 300
Phoenix, Arizona, 85003

These suggestions will be reviewed by the committee and appropriate segments of the industry and cumulative annual revisions will be published the first of each year.

While in the interest of uniformity, it is hoped that all using agencies will adopt these standards with as few changes as possible, it is recognized that because of charter requirements and for other reasons, some agencies will find it necessary to modify or supplement certain requirements.

TABLE OF CONTENTS

SAMPLE FORMS

	Page
Bond Issue or Budget Project	i
Improvement District Project	iii
Surety Bond	iv
Bond Issue or Budget Project	v
Contract	v
Improvement District Project	vii
Contract	vii
Contract Performance Bond	ix
Labor and Materials Payment Bond	x
Engineering Department Certificate of Insurance	xi
Contractor's Affidavit Regarding Settlement of Claims	xiii
Change Order Request	xiv
Authorized Signature Form	xv

PART 100 — GENERAL CONDITIONS

Section	Title	Page
101	Abbreviations and Definitions	101-1
102	Bidding Requirements and Conditions	102-1
103	Award and Execution of Contract	103-1
104	Scope of Work	104-1
105	Control of Work	105-1
106	Control of Materials	106-1
107	Legal Regulations and Responsibility to Public	107-1
108	Commencement, Prosecution and Progress	108-1
109	Measurements and Payments	109-1
110	Changed Conditions and Dispute Resolution	110-1

PART 200 — EARTHWORK

Section	Title	Page
201	Clearing and Grubbing	201-1
205	Roadway Excavation	205-1
206	Structure Excavation and Backfill	206-1
210	Borrow Excavation	210-1
211	Fill Construction	211-1
215	Earthwork for Open Channels	215-1
220	Riprap Construction	220-1
225	Watering	225-1

PART 300 — STREETS AND RELATED WORK

Section	Title	Page
301	Subgrade Preparation	301-1
309	Lime Slurry Stabilization	309-1
310	Untreated Base	310-1
311	Soil Cement Base Course	311-1
312	Cement Treated Base	312-1
313	Bituminous Treated Base Course	313-1
315	Bituminous Prime Coat	315-1
320	Road-mixed Surfacing	320-1
321	Asphalt Concrete Pavement	321-1
322	Asphalt Concrete Overlay	322-1
323	Heater Remix Resurfacing	323-1
324	Portland Cement Concrete Street Pavement	324-1
327	Hot In -Place Recycling	327-1
329	Tack Coat	329-1

330 Asphalt Chip Seal 330-1
332 Asphalt Emulsion Slurry Seal Coat 332-1
333 Fog Seal Coats 333-1
334 Preservative Seal for Asphalt Concrete 334-1
335 Hot Asphalt-rubber Seal 335-1
336 Pavement Matching and Surfacing Replacement 336-1
340 Concrete Curb, Gutter, Sidewalk, Driveway and Alley Entrance 340-1
341 Terrazzo Sidewalks 341-1
342 Decorative Pavement Concrete Paving Stone or Brick 342-1
343 Exposed Aggregate Paving 343-1
345 Adjusting Frames, Covers, Valve Boxes and Water Meter Boxes 345-1
350 Removal of Existing Improvements 350-1
360 Telecommunications Installation 360-1

PART 400 — RIGHT-OF-WAY AND TRAFFIC CONTROL

Section	Title	Page
401	Traffic Control	401-1
405	Monuments	405-1
410	Precast Safety Curbs	410-1
415	Flexible Metal Guardrail	415-1
420	Chain Link Fences	420-1
424	Parkway Grading	424-1
425	Topsoils	425-1
430	Landscaping and Planting	430-1
440	Sprinkler Irrigation System Installation	440-1

PART 500 — STRUCTURES

Section	Title	Page
501	Driving Piles	501-1
505	Concrete Structures	505-1
506	Precast Prestressed Concrete Members	506-1
510	Concrete Block Masonry	510-1
511	Brick Masonry	511-1
515	Steel Structures	515-1
520	Steel and Aluminum Handrails	520-1
525	Pneumatically Placed Mortar	525-1
530	Painting	530-1

PART 600 — WATER AND SEWERE

Section	Title	Page
601	Trench Excavation, Backfilling and Compaction	601-1
602	Encasement of Water or Sewer Pipe by Jacking or Tunneling Operation	602-1
603	Installation for High Density Polyethylene Pipe	603-1
604	Placement of Controlled Low Strength Material	604-1
605	Subdrainage	605-1
610	Water Line Construction	610-1
611	Disinfecting Water Mains	611-1
615	Sewer Line Construction	615-1
616	Reclaimed Water Line Construction	616-1
618	Storm Drain Construction	618-1
620	Cast-In-Place Concrete Pipe	620-1
621	Corrugated Metal Pipe and Arches	621-1
625	Manhole Construction and Drop Sewer Connections	625-1
630	Tapping Sleeves, Valves and Valve Boxes on Water Lines	630-1
631	Water Taps and Meter Service Connections	631-1

PART 700 — MATERIALS

Section	Title	Page
701	Rock, Gravel, and Sand	701-1
702	Base Materials	702-1
703	Riprap	703-1
705	Portland Cement Treated Base	705-1
709	Reclaimed Asphalt Pavement	709-1
710	Asphalt Concrete	710-1
711	Paving Asphalt	711-1
712	Liquid Asphalt	712-1
713	Emulsified Asphalts	713-1
715	Slurry Seal Materials	715-1
716	Cover Material	716-1
717	Asphalt-Rubber	717-1
718	Preservative Seal for Asphalt Concrete	718-1
719	Recycled Asphalt Concrete Hot Mixed	719-1
725	Portland Cement Concrete	725-1
726	Concrete Curing Materials	726-1
727	Steel Reinforcement	727-1
728	Controlled Low Strength Material	728-1
729	Expansion Joint Filler	729-1
735	Reinforced Concrete Pipe	735-1
736	Non-Reinforced Concrete Pipe	736-1
737	Asbestos-Cement Pipe and Fittings for Storm Drain and Sanitary Sewer	737-1
738	High Density Polyethylene Pipe & Fittings for Storm Drain & Sanitary Sewer	738-1
741	Lining for Reinforced Concrete Sanitary Sewer Pipe	741-1
743	Vitrified Clay Pipe	743-1
744	ABS Truss Pipe and Fittings	744-1
745	PVC Sewer Pipe and Fittings	745-1
750	Iron Water Pipe and Fittings	750-1
752	Asbestos-Cement Water Pipe and Fittings	752-1
753	Galvanized Pipe and Fittings	753-1
754	Copper Pipe, Tubing and Fittings	754-1
755	Polyethylene Pipe for Water Distribution	755-1
756	Fire Hydrants	756-1
757	Sprinkler Irrigation System	757-1
758	Concrete Pressure Pipe - Steel Cylinder Type	758-1
760	Coating Corrugated Metal Pipe and Arches	760-1
761	Structural Plate Pipe, Arches, and Pipe Arches	761-1
765	Rubber Gaskets for Concrete Pipe	765-1
770	Structural and Rivet Steel, Rivets, Bolts, Pins, and Anchor Bolts	770-1
771	Galvanizing	771-1
772	Chain Link Fence	772-1
775	Brick and Concrete Block	775-1
776	Masonry Mortar and Grout	776-1
778	Lumber	778-1
779	Wood Preservatives	779-1
780	Timber Piles	780-1
781	Steel Piles	781-1
782	Concrete Piles	782-1
785	Steel Castings	785-1
786	Bronze Castings	786-1
787	Gray Iron Castings	787-1
790	Paint	790-1
792	Dust Palliative	792-1
795	Landscape Material	795-1

Index Index-1

Project No._____

BOND ISSUE OR BUDGET PROJECT

CITY OF_____, ARIZONA

ENGINEERING DEPARTMENT

PROPOSAL to the City Engineer of the City of _____.

In compliance with the Advertisement for Bids, by the City Engineer, the undersigned Bidder:

Having examined the contract documents, site of work, and being familiar with the conditions to be met, hereby submits the following Proposal for furnishing the material, equipment, labor and everything necessary for the completion of the work listed and agrees to execute the contract documents and furnish the required bonds and certificates of insurance for the completion of said work, at the locations and for the prices set forth on the inside pages of this form.

Understands that construction of this project shall be in accordance with all applicable Uniform Standard Specifications and Standard Details except as otherwise required by the Project Plans and Special Provisions.

Understands that his proposal shall be submitted with a proposal guarantee in the form of a certified check, cashiers check or surety bond for ten (10) per cent of the amount of the bid.

Agrees that upon receipts of Notice of Award, from the City of_____, he will execute the contract documents.

Work shall be completed within _____ calendar days, beginning with the day following the starting date specified in the Notice to Proceed. The time allowed for completion of the work includes lead time for obtaining the necessary material and/or equipment.

The Bidder hereby acknowledges receipt of and agrees his proposal is based on the following Addenda.

_____

_____

FOR PROJECT NO.		BID SCHEDULE				
PAY ITEM NO.	**UNIT AND APPROXIMATE QUANTITIES**	**DESCRIPTION** **UNIT BID PRICE IN WORDS**	**UNIT BID PRICE DOLLARS & CENTS**		**AMOUNT BID DOLLARS & CENTS**	
1.		For____and /100 Dollars per__				
2.		For____and /100 Dollars per__				
3.		For____and /100 Dollars per__				
4.		For____and /100 Dollars per__				
5.		For____and /100 Dollars per__				
6.		For____and /100 Dollars per__				
7.		For____and /100 Dollars per__				
8.		For____and /100 Dollars per__				
9.		For____and /100 Dollars per__				
TOTAL		For____and /100 Dollars per__				

THIS PROPOSAL IS SUBMITTED BY _____, a corporation organized under the laws of the State of _____, a partnership consisting of _____ _____or individual trading as _____ _____ of the City of _____ and is the holder of Arizona State Contractor's License: _____

Classification _____ No. _____

Respectfully submitted,

FIRM _____

ADDRESS _____

BY _____

Officer and Title

Date _____

ATTEST:

_____

Officer and Title

_____

Witness: If Bidder is an Individual

Project No._____

IMPROVEMENT DISTRICT PROJECT

CITY OF_____, ARIZONA

ENGINEERING DEPARTMENT

PROPOSAL to the City Council of the City of _____.

In compliance with the advertisement for Bids, by the Superintendent of Streets, the undersigned Bidder:

Having examined the contract documents, site of work, and being familiar with the condition to be met, hereby submits the following Proposal for furnishing the materials, equipment, labor and everything necessary for the completion of the work listed and agrees to execute the contract documents and furnish the required bonds and certificates of insurance for the completion of said work, at the locations and for the prices set forth on the inside pages of this form.

Understands that construction of this project shall be in accordance with all applicable Uniform Standard Specifications and Standard Details except as otherwise required by the Project Plans and Special Provisions.

Understands improvement bonds, issued under the provisions of Sections 48-571 to 48-619, Arizona Revised Statutes, will be issued to represent the costs and expenses of the improvement. These bonds will bear interest at the rate of _____ percent per annum.

Submits herewith a surety bond, equal to 10 percent of the amount of the highest proposal submitted.

Agrees that upon publication of Notice of Award, in accordance with ARS Section 48-584, he will execute the contract documents.

Work shall be completed within _____ calendar days, beginning with the day following the date of execution of the contract. The time allowed for completion of the work includes lead time for obtaining the necessary materials and/or equipment.

THIS PROPOSAL IS SUBMITTED BY _____, a corporation organized under the laws of the State of _____, a partnership consisting of _____ _____ or individual trading as _____ _____ of the City of _____ and is the holder of Arizona State Contractor's License: _____

Classification _____ No. _____

Respectfully submitted,

FIRM _____

ADDRESS _____

BY _____

Officer and Title

Date _____

ATTEST:

_____

Officer and Title

_____

Witness: If Bidder is an Individual

Project No._____

SURETY BOND

KNOW ALL MEN BY THESE PRESENTS:

That we, _____, as Principal, (hereinafter called the Principal), and the _____, a corporation duly organized under the laws of the State of _____ and duly licensed and possessing a certificate of authority to transact surety business in the State of Arizona, as Surety, (hereinafter called the Surety), are held and firmly bound unto the _____ of _____as Obligee, in the sum of ten percent (10%) of the total amount of the bid of Principal, submitted by him to the _____ of _____ for the work described below, for the payment of which sum, well and truly to be made, the said Principal and the said Surety, bind ourselves, our heirs, executors, and administrators, successors, and assigns, jointly and severally, firmly by these presents, and in conformance with A.R.S.

WHEREAS, the said Principal is herewith submitting its proposal for _____

_____

_____

NOW, THEREFORE, if the _____ of _____ shall accept the proposal of the Principal and the Principal shall enter into a contract with the _____ of _____ in accordance with the terms of the proposal and give the Bonds and Certificates of Insurance as specified in the Standard Specifications with good and sufficient Surety for the faithful performance of the contract and for the prompt payment of labor and materials furnished in the prosecution of the contract, or in the event of the failure of the Principal to enter into the contract and give the Bonds and Certificates of Insurance, if the Principal pays to the _____ of _____ _____ the difference not to exceed the penalty of the bond between the amount specified in the proposal and such larger amount for which the obligee may in good faith contract with another party to perform the work covered by the proposal then this obligation is void. Otherwise it remains in full force and effect provided, however, that this bond is executed pursuant to the provisions of Section 34-201, Arizona Revised Statutes, and all liabilities on this bond shall be determined in accordance with the provisions of the section to the extent as if it were copied at length herein.

Signed and sealed this _____ day of _____, A.D., 19_____

_____
Principal

_____
Title

Witness:

_____

_____
Surety

_____
Title

Witness:

_____

BOND ISSUE OR BUDGET PROJECT

CONTRACT

THIS AGREEMENT, made and entered into this _____ day of _____, 19_____, by and between _____ of the City of _____, County of _____, and State of _____, party of the first part, hereinafter designated the CONTRACTOR, and the City of _____, a municipal corporation, organized and existing under and by virtue of the laws of the State of Arizona, party of the second part, hereinafter designated the OWNER.

WITNESSETH: That the said Contractor, for and in consideration of the sum to be paid him by the said Owner, in the manner and at the time hereinafter provided, and of the other covenants and agreements herein contained, and under the penalties expressed in the bonds provided, hereby agrees, for himself, his heirs, executors, administrators, successors, and assigns as follows:

ARTICLE I — SCOPE OF WORK: The Contractor shall furnish any and all labor, materials, equipment, transportation, utilities, services and facilities required to perform all work for the construction of Project No. _____ _____and to completely and totally construct the same and install the material therein for the Owner, in a good and workmanlike and substantial manner and to the satisfaction of the Owner through its Engineers and under the direction and supervision of the Engineer, or his properly authorized agents and strictly pursuant to and in conformity with the Plans and Specification prepared by the Engineers for the Owner, and with such modifications of the same and other documents that may be made by the Owner through the Engineer or his properly authorized agents, as provided herein.

ARTICLE II — CONTRACT DOCUMENTS: The Call for Bids, Plans, Standard Specifications and Details, Special Provisions, Addenda, if any, and Proposal, as accepted by the Mayor and Council per Council Minutes of _____ _____, 19_____, Performance Bond, Payment Bond, Certificates of Insurance, and Change Orders, if any, are by this reference made a part of this Contract to the same extent as if set forth herein in full.

ARTICLE III — TIME OF COMPLETION: The Contractor further covenants and agrees at his own proper cost and expense, to do all work as aforesaid for the construction of said improvements and to completely construct the same and install the material therein, as called for by this agreement free and clear of all claims, liens, and charges whatsoever, in the manner and under the conditions specified within the time, or times, stated in the proposal pamphlet.

ARTICLE IV — PAYMENTS: For and in consideration of the faithful performance of the work herein embraced as set forth in the Contract Documents, which are a part hereof and in accordance with the directions of the Owner, through its Engineer, and to his satisfaction, the Owner agrees to pay the said Contractor the amount earned, computed from actual quantities of work performed and accepted or materials furnished at the unit bid price on the Proposal made a part hereof, and to make such payment within forty-five (45) days after final inspection and acceptance of the work.

The Contractor hereby agrees to indemnify and save harmless the City of _____, and any jurisdiction or agency issuing permits for any work included in the project, their officers, agents and representatives from all suits, actions, loss, damage, expense, cost, or claims of any character or any nature brought on account of any injuries or damage sustained by any person or property arising out of the work done in fulfillment of the construction of the improvement under the terms of this agreement, or on account of any act or omission by the Contractor or his agents, or from any claims or amounts arising or recovered under Workmen's Compensation laws or any other law, bylaw, ordinance, or order or decree.

IN WITNESS WHEREOF, six (6) identical counterparts of this contract each of which shall be for all purposes be deemed an original thereof, have been duly executed by the parties herein above named, on the date and year first above written.

The Contractor agrees that this Contract, as awarded, is for the stated work, and understands that payment for the total work will be made on the basis of the indicated amount(s), as bid in the Proposal.

ATTEST:

_____

_____

_____
(Contractor — Party of the First Part)

By_____
(Name and Title)

WITNESS: If Contractor is an Individual

(Corporate Seal)

ATTEST:

City of _____, a municipal corporation
(Owner — Party of the Second Part)

_____ _____

_____ By _____ (Authorized Officer)
(Official Title)

City Clerk
(Official Title)

(Corporate Seal)

APPROVED AS TO FORM THIS

Authority — City Council _____ day of _____, 19_____.

_____ _____
City Attorney

IMPROVEMENT DISTRICT PROJECT

CONTRACT

		INCIDENTALS
Ordinance of Intention No._____	Engineering	$
Resolution Ordering Work No. _____	Inspection	$
Date Contract Awarded _____	Clerical	$
Improvement District Contract No. _____	Printing	$_____
Superintendent of Streets	Total	$

* * * * * *

THIS AGREEMENT, made and entered into this _____ day of _____, 19____, by and between _____ _____, party of the first part, and the City of _____, Arizona, County of Maricopa, State of Arizona, acting under the provision of Sections 9-671 to 9-710, both inclusive, Arizona Revised Statues, and amendments thereto, part of the second part.

WITNESSETH:

THAT WHEREAS, the party of the first part, as will appear by reference to the minutes of the proceedings of the Council of the City _____, on the _____ day of _____, 19_____, was duly awarded the contract for the work hereinafter mentioned; and

THEREFORE, the party of the first part, for the consideration hereinafter mentioned, promises and agrees to and with said party of the second part, that it will completely and totally do and perform, or cause to be so done and performed, in a good workmanlike manner, under the direction and to the satisfaction of the Superintendent of Streets, all the work described in an Ordinance in the records of the proceedings of the Council of the City of _____, a copy of said Ordinance being attached hereto and made a part hereof, for the purpose of providing a description of said work herein.

The party of the first part further agrees that it will completely and totally do or perform said work according to the Plans and Specifications, for said work referred to in said Ordinance, (a copy of which is attached hereto as aforesaid), which said Plans and Specifications are made a part of this contract, and that it will, at its own cost and expense, furnish all necessary labor and materials for said work and that the materials used therein shall comply with the said Specifications and be to the satisfaction of said Superintendent of Streets, and that it will within the time hereinafter fixed, turn the said work over to the Superintendent of Streets, complete and totally ready for use, free and discharged of all claims and demands whatsoever, for or on account of any and all labor and materials used or furnished to be used in said improvement.

And the part of the second part, hereby fixes the time for commencement of said work to be within ten (10) days from the date hereof, and for its completion to be within _____ calendar days from the date hereof, and promises and agrees that upon the complete and total performance of the covenants aforesaid by the said party of the first part, to make and issue an assessment and attach a warrant thereto as provided for in Sections 9-671 to 9-710, both inclusive, Arizona Revised Statutes, and amendments thereto, at the price specified in the Proposal of the party of the first part for said improvement as duly accepted by the Council of the City of _____, a copy of said Proposal being made a part hereof for the purpose of providing a statement of said prices.

In the event the Contractor completes the construction work within the time specified, this contract shall remain in full force and effect until the Bonds to be issued hereunder have been authorized by the Council of the City of _____.

AND IT IS EXPRESSLY UNDERSTOOD AND AGREED by the parties to this agreement that in no case (except where it is otherwise provided in Sections 9-671 to 9-710, both inclusive, Arizona Revised Statues, and amendments thereto) will the City of _____ or any officer hereof, be liable for any portion of the expenses of the work, aforesaid, nor for any delinquency of persons or property assessed.

IN WITNESS WHEREOF, the parties hereto have caused these presents to be executed, the day and year first herein written.

_____
(Contractor — Party of the First Part)

By_____
(Name and Title)

City of _____
(Party of the Second Part)

By_____
(Superintendent of Streets)

CONTRACT PERFORMANCE BOND

STATUTORY PERFORMANCE BOND PURSUANT TO TITLE 34, CHAPTER 2, ARTICLE 2, OF THE ARIZONA REVISED STATUTES

(Penalty of this bond must be 100% of the Contract amount)

KNOW ALL MEN BY THESE PRESENTS:

That, _____ (hereinafter called the Principal), as Principal, and _____, a corporation organized and existing under the laws of the State of _____ and duly licensed and possessing a certificate of authority to transact surety business in the State of Arizona, with its principal office in the City of _____, (hereinafter called the Surety) as Surety, are held firmly bound unto the _____ of _____ (hereinafter called the Obligee) in the amount of _____, ($_____) for the payment whereof, the said Principal and Surety bind themselves, and their heirs, administrators, executors, successors, and assigns, jointly and severally, firmly by these presents.

WHEREAS, the Principal has entered into a certain written contract with the Obligee dated the _____ day of _____, 19____, to construct _____ Project # _____ which contract is hereby referred to and made a part hereof as fully and to the same extent as if copied at length herein.

NOW, THEREFORE, THE CONDITION OF THIS OBLIGATION IS SUCH, that if the Principal shall faithfully perform and fulfill all of the undertakings, covenants, terms, conditions and agreements of the contract during the original term of the contract and any extension of the contract with or without notice to the Surety, and during the life of any guaranty required under the contract and also performs and fulfills all of the undertakings, covenants, terms, conditions, and agreements of all duly authorized modifications of the contract that may hereafter be made, notice of which modifications to the Surety being hereby waived; the above obligation is void. Otherwise it remaius in full force and effect.

PROVIDED, HOWEVER, that this bond is executed pursuant to the provisions of Title 34, Chapter 2, Article 2, Arizona Revised Statutes, and all liabilities on this bond shall be determined in accordance with the provisions, of Title 34, Chapter 2, Article 2, Arizona Revised Statutes, to the extent as if it were copied at length in this Agreement.

The prevailing party in a suit on this bond shall recover as part of the judgement reasonable attorney fees that may be fixed by a judge of the court.

Witness our hands this _____ day of _____, 19____.

_____
PRINCIPAL SEAL

_____
AGENCY OF RECORD

By_____

_____
SURETY

_____
AGENCY ADDRESS

By_____

LABOR AND MATERIALS PAYMENT BOND

STATUTORY PAYMENT BOND PURSUANT TO
TITLE 34, CHAPTER 2, ARTICLE 2,
OF THE ARIZONA REVISED STATUTES
(Penalty of this bond must be 100% of the Contract amount)

KNOW ALL MEN BY THESE PRESENTS:

That, _____ (hereinafter called the Principal), as Principal, and _____, a corporation organized and existing under the laws of the State of _____ and duly licensed and possessing a certificate of authority to transact surety business in the State of Arizona, with its principal office in the City of _____ (hereinafter called the Surety) as Surety, are held and firmly bound unto the _____ of _____ (hereinafter called the Obligee) in the amount of _____ ($ _____) for the payment whereof, the said Principal and Surety bind themselves, and their heirs, administrators, executors, successors, and assigns, jointly and severally, firmly by these presents.

WHEREAS, the Principal has entered into a certain written contract with the Obligee dated the _____day of _____, 19___, to construct _____ Project # _____ which contract is hereby referred to and made a part hereof as fully and to the same extent as if copied at length herein.

NOW, THEREFORE, THE CONDITION OF THIS OBLIGATION IS SUCH, that if the Principal promptly pays all moneys due to all persons supplying labor or materials to the Principal or the Principal's subcontractors in the prosecution of the work provided for in the contract, this obligation is void, otherwise it remains in full force and effect.

PROVIDED, HOWEVER, that this bond is executed pursuant to the provisions of Title 34, Chapter 2, Article 2, of the Arizona Revised Statutes, and all liabilities on this bond shall be determined in accordance with the provisions, conditions and limitations of Title 34, Chapter 2, and Article 2, Arizona Revised Statutes to the same extent as if they were copied at length in this Agreement.

The prevailing party in a suit on this bond shall recover as a part of the judgement reasonable attorney fees that may be fixed by a judge of the court.

Witness our hands this _____ day of _____, 19____.

_____
PRINCIPAL SEAL

_____
AGENCY OF RECORD

By_____

_____
SURETY

_____
AGENCY ADDRESS

By_____

CITY OF _____, ARIZONA

ENGINEERING DEPARTMENT CERTIFICATE OF INSURANCE

Project No. _____

The _____Certifies that the following insurance policies have been issued on behalf of

Name of Insured _____
Address of Insured _____

Type of Insurance	Policy No.	Eff. Date	Exp. Date	Limits of Liability
(1) Workmen's Compensation				Statutory
(2) Contractor's Protective Bodily Injury			$500,000	Each Occurrence
(3) Contractor(s) Protective Property Damage			$100,000 $100,000	Each Accident Aggregate
(3) Contractual Bodily Injury			$500,000	Each Occurrence
(3) Contractual Property Damage			$100,000 $100,000	Each Accident Aggregate
(4) Automobile Bodily Injury & Property Damage			$500,000	Each Occurrence

When the project includes construction of a new, or modification of an existing building (**in addition to the above types**):

(5) Fire and Extended Coverage plus Vandalism and Malicious Mischief For the Full Amount of the Contract, with the City of _____ named as an additional insured.

	Policy No.	Exp. Date	Amount
(6) Umbrella Coverage			

Policy Includes Coverage For:

(1) a. Damage caused by blasting
b. Damage caused by collapse or structural injury
c. Damage to underground utilities

(2) Liability assumed in construction agreements and other types of contracts or agreements in effect in connection with insured operations.

(3) All owned, hired or non-owned automotive equipment used in connection with the insured operation.

_____

It is agreed that none of these policies will be cancelled or changed so as to affect this certificate until ten (10) days written notice of such cancellation or change has been delivered to City of _____.

It is further agreed that:

(1) These policies shall not expire until all work has been completed and the project has been accepted by the City of ___ _____. **(If a policy does expire during the life of the Contract, a renewal Certificate of the required coverage must be sent to the City of _____ not less than five days prior to expiration date.)**

This certificate is not valid unless countersigned by an authorized representative of the Insurance Company.

Date _____ Countersigned by _____

_____

Signature

CITY OF _____ ARIZONA
ENGINEERING DEPARTMENT

CONTRACTOR'S AFFIDAVIT REGARDING SETTLEMENT OF CLAIMS

Part 100, Section 109, General Conditions

_____, Arizona

Date _____

Project No. _____

To The City of _____, Arizona

Gentlemen:

This is to certify that all lawful claims for materials, rental of equipment and labor used in connection with the construction of the above project, whether by subcontractor or claimant in person, have been duly discharged.

The undersigned, for the consideration of $ _____, as set out in the final pay estimate, as full and complete payment under the terms of the contract, hereby waives and relinquishes any and all further claims or right of lien under, in connection with, or as a result of the above described project. The undersigned further agrees to indemnify and save harmless the City of _____ against any and all liens, claims of liens, suits, actions, damages, charges and expenses whatsoever, which said City may suffer arising out of the failure of the undersigned to pay for all labor performance and materials furnished for the performance of said installations.

Signed and dated at _____, this _____ day of _____, 19_____.

_____
Contractor

_____
By

STATE OF ARIZONA)
ss
COUNTY OF MARICOPA)

The foregoing instrument was subscribed and sworn to before me this day of _____, 19____.

_____
Notary Public

My Commission Expires _____

CITY OF _____, ARIZONA

CHANGE ORDER REQUEST

Date: _____ Request: _____

Name of Project: _____

Project No: _____ Contractor: _____

Description of Proposed Change Order:

Reason for Change:

Estimated Cost: $_____ Change in Contract Time:_____(See Attached Sheet for Detailed Cost) (Calendar Days)

Submitted By:_____ Title: _____

Recommended By:_____ Title: _____

Approved By:_____ Title: _____

CITY OF _____, ARIZONA
AUTHORIZED SIGNATURE FORM

Project Name: _____
Project No: _____

Whereas, _____, an _____ Corporation, is
(Name of State)
required to execute certain documents which are necessary for the prompt and efficient execution of the corporate business; NOW, THEREFORE, BE IT RESOLVED, by the Board of Directors of the _____
(Corporate Name)
that (name of parties authorized) _____,_____ authorized to execute and sign on behalf of said corporate the following documents:

1. The Contract
2. The Bond
3. Payrolls
4. Claims
5. Change Orders
6. All other papers necessary for the conduct of the corporation's affairs and the execution of the Contract.

The powers and duties herein granted shall be and is hereby granted for the duration of the contract for this project or until express notice of revocation has been duly given in writing, whichever is the lesser period.
Dated and passed by the Board of Directors this _____ day of _____, 19_____

_____	_____	_____
_____	_____	_____
_____	_____	_____
_____	_____	_____
(Signature of Persons Authorized to Sign)	(Title)	(Document No.)

CERTIFICATE

STATE OF)
)ss
COUNTY OF)

I, _____ of the _____, a corporation do hereby certify that the above is a true and correct copy of a resolution adopted by the Board of Directors of said corporation, at a meeting of said board held on _____, 19_____, and that the same is in full force and effect at this time.

Dated _____, 19_____

_____
(Officer of Corporation)

(Seal of Corporation)
STATE OF ARIZONA)
)ss
COUNTY OF _____)

This instrument was acknowledged before me _____ day of _____ 19____
by _____appearing before the undersigned Notary Public, and stated that he executed such instrument on behalf of said corporation for the purpose and consideration therein expressed.

_____My commission Expires:
(Notary Public)

_____

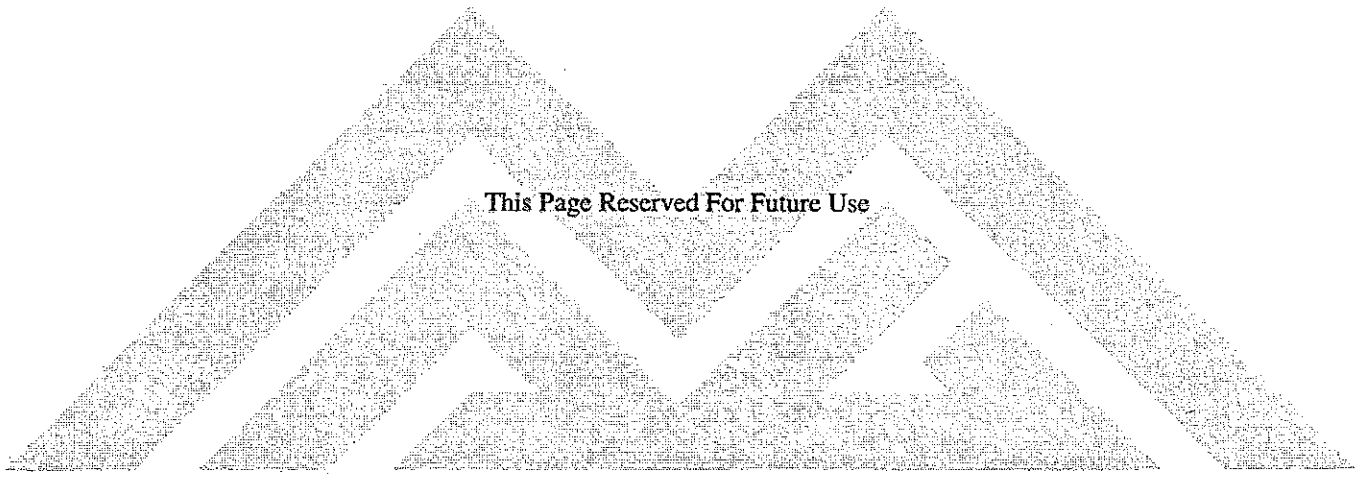
This Page Reserved For Future Use

PART 100

GENERAL CONDITIONS

Section	Title	
101	Abbreviations and Definitions	101-1
102	Bidding Requirements and Conditions	102-1
103	Award and Execution of Contract	103-1
104	Scope of Work	104-1
105	Control of Work	105-1
106	Control of Materials	106-1
107	Legal Regulations and Responsibility to Public	107-1
108	Commencement, Prosecution and Progress	108-1
109	Measurements and Payments	109-1

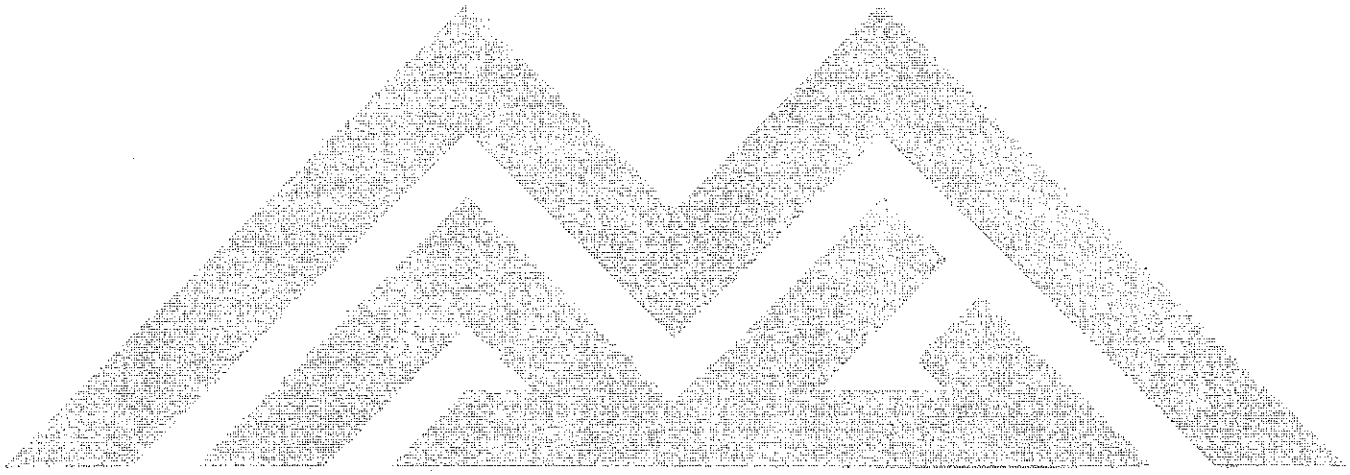

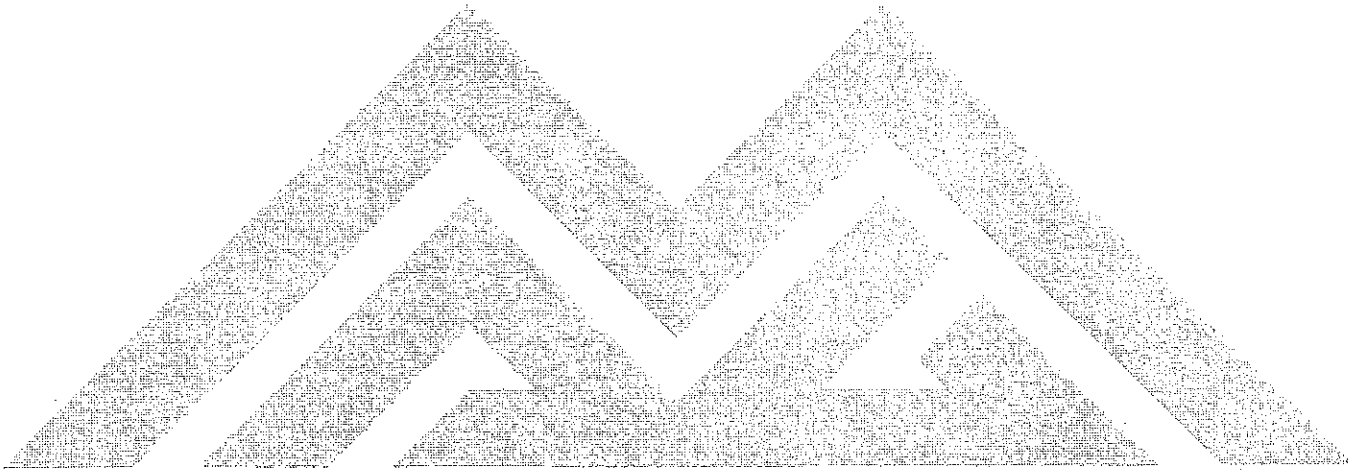

SECTION 101

ABBREVIATIONS AND DEFINITIONS

101.1 ABBREVIATIONS:

Wherever the following abbreviations are used in these specifications, standard details or on the plans, they are to be construed the same as the respective expressions represented.

AASHTO	American Association of State Highway and Transportation Officials
AAN	American Association of Nurserymen
AB	Aggregate base
Aban	Abandon
ABC	Aggregate base course
AC	Asphalt cement or concrete
ACB	Asphalt concrete base
ACI	American Concrete Institute
ACP	Asbestos cement pipe
ACPA	American Concrete Pipe Association
ACWS	Asphalt concrete wearing surface
AFRB	Arizona Fire Rating Bureau
AGC	Associated General Contractors of America, Inc.
Agg	Aggregate
ADOT	Arizona Department of Transportation
Ahd	Ahead
AIA	American Institute of Architects
AIEE	American Institute of Electrical Engineers
AISC	American Institute of Steel Construction
ANSI	American National Standards Institute
APA	American Plywood Association
Approx	Approximate
APWA	American Public Works Association
AR	Aged residue
ARS	Arizona Revised Statutes
ASCE	American Society of Civil Engineers
ASME	American Society of Mechanical Engineers
Asph	Asphalt
ASTM	American Society for Testing Materials
Ave	Avenue
AWPA	American Wood Preservers Association
AWSC	American Welding Society Code
AWWA	American Water Works Association
Bbl	Barrel
BC	Beginning of curve
BCR	Beginning of curb return
Beg	Beginning
Bk	Book or Back
Blvd	Boulevard
BM	Bench Mark or Board Measure
Brg	Bearing
BST	Bituminous Surface Treatment
BTB	Bituminous Treated Base
BTU	British Thermal Units
BVC	Beginning of vertical curve
C	Centigrade or Curb

CB	Catch Basin
CBF&C	Catch basin frame & cover
CC or C/C	Center to Center
CE	City or County Engineer
Cem	Cement
CF	Curb face
cfs	Cubic Feet per second
CIP	Cast Iron pipe
CIPP	Cast-in-place concrete pipe
CL or C	Centerline
Cm	Centimeter
CMP	Corrugated metal pipe
CO	Clean out
Col	Column
Conc	Concrete
Const	Construct
CP	Concrete pipe (non-reinforced)
CTB	Cement Treated Base
Cu	Cubic
Deg	Degree
DF	Douglas Fir
DG	Decomposed granite
Dia	Diameter
Dim	Dimension
DIP	Ductile Iron Pipe
Div	Division
Dr	Drive
Drwg	Drawing
Dwy	Driveway
Ea	Each
Ease	Easement
E	East
EC	End of curve
ECR	End of curb return
El or Elv	Elevation
Equa or Eq	Equation
EVC	End of vertical curve
Ex or Exist	Existing
F	Fahrenheit
FB	Field book
F & C	Frame & cover
FH	Fire hydrant
FL or F	Floor line or flow line
Fl El	Floor Elevation
Fnd	Found
fps	Feet per second
FS	Finished surface
FSS	Federal Specifications and Standards
Ft	Foot or feet
G	Gutter
Ga	Gage

Galv	Galvanized
GL	Ground line
gpm	Gallons per minute
Gr	Grade
H	High or height
HC	House connection
Hdwl	Headwall
Horiz	Horizontal
Hwy	Highway
ICA	Industrial Commission of Arizona
ID	Improvement District or inside diameter
IE	Invert Elevation
IEEE	Institute of Electrical and Electronic Engineers
In	Inch
Inv	Invert
IP	Iron Pipe
IPS	Iron Pipe Size
Irrig	Irrigation
Jt	Joint
JC	Junction Chamber
Jct	Junction
JS	Junction Structure
L	Length
Lb	Pound
L&T	Lead and tack
LD	Local depression
LF	Linear Feet
LH	Lamp hole
Lin	Linear
Long.	Longitudinal
Lt	Left
M	Map or maps
MAG	Maricopa Association of Governments
Max	Maximum
MCR	Maricopa County Records
Meas	Measured
MH	Manhole
MHF&C	Manhole frame and cover
Min	Minutes or minimum
Misc	Miscellaneous
ML or M	Monument line
mm	Millimeter
Mon	Monolithic or monument
MTD	Multiple tile duct

N	North
NBS	National Bureau of Standards
NCPI	National Clay Pipe Institute
NE	Northeast
NEC	National Electric Code
NEMA	National Electrical Manufacturer's Association
NFPA	National Fire Protection Association
NP	Non-plastic
NPI	Non pay item
NSC	National Safety Council
NSF	National Sanitation Foundation
NW	Northwest
No	Number
OC	On center
OD	Outside diameter
Oz	Ounces
P.C	Point of curvature
PCC	Point of compound curve or Portland Cement Concrete
PI	Point of intersection or plastic index
PL	Property line
POC	Point of Curve
POS	Point of Spiral
PP	Power pole
ppm	Parts per million
PRC	Point of reverse curve
Prod	Produced
Prop	Proposed or property
psi	Pounds per square inch
psf	Pounds per square foot
PT or POT	Point of Tangent
P&TP	Power and telephone pole
Pvmt	Pavement
Q	Rate of flow
R	Radius
RC	Reinforced concrete
RCP	Reinforced concrete pipe
Rd	Road
Rdwy	Roadway
Reinf	Reinforced, Reinforcing
Ret Wall	Retaining Wall
RGRCP	Rubber Gasket Reinforced Concrete Pipe
rpm	Revolutions Per Minute
Rt	Right
R/W	Right-of-way
S	South or slope
SAE	Society of Automotive Engineers
San	Sanitary
SC	Spiral to Curve
SCCP	Steel cylinder concrete pipe
SD	Storm drain or Sewer District

Sdl	Saddle
Sec	Seconds
Sect	Section
SE	Southeast
Sht	Sheet
Spec	Specifications
SPR	Simplified Practice Recommendation
Sp MH	Special manhole
Sq Ft Yd	Square Foot, Yard
SS	Sanitary sewer
St	Street
Sta	Station
Std	Standard
Str gr	Structural grade
Struct	Structure or structural
SW	Southwest
T	Tangent Distance
Tel	Telephone
Temp	Temporary
TH	Test hole
TP	Telephone pole
Tr	Tract
Trans	Transition
TS	Traffic signal or Tangent to spiral
TSC	Traffic signal conduit
Typ	Typical
UL	Underwriters' Laboratories Inc.
USC & GS	United States Coast and Geodetic Survey
USGS	United States Geological Survey
V	Velocity of flow
VC	Vertical curve
VCP	Vitrified clay pipe
Vert	Vertical
W	West or width
WI	Wrought iron
WS	Wearing surface
Wt	Weight
Yd	Yard
'	feet or minutes
"	inches or seconds
°	degrees
%	percent
#	number or pound
@	at
/	per
=	equals

101.2 DEFINITIONS AND TERMS:

Whenever in these specifications or in other contract documents the following terms or pronouns in place of them are used, the intent and meaning shall be interpreted as follows:

Addendum: A supplement to any of the Contract Documents issued, in writing, after advertisement of but prior to the opening of bids for a contract.

Advertisement: The public announcement, as required by law, inviting bids for work to be performed or materials to be furnished.

Agency: The governmental agency for which the construction is being done, either by permit or contract.

Architect: The individual or firm who has accomplished the architectural services for the project, including his representatives.

Award: The formal action of the governing body is accepting a proposal.

Backfill: Material placed in an excavated space to fill such space. For trenches, this space will be the area from 1 foot above the top of the pipe or conduit to the existing or proposed finished grade of pavement.

Base Course: The upper course of the granular base of a pavement or the lower course of an asphalt concrete pavement structure.

Bedding: Is the material placed in the area from the bottom of the trench to 1 foot above the top of the pipe or conduit.

Bidder: Any qualified individual, firm, partnership, corporation or combination thereof, acting directly or through a duly authorized representative who legally submits a proposal for the advertised work.

Board of Supervisors: The Maricopa County Board of Supervisors acting under the authority of the laws of the State of Arizona.

Bond Issue Project: A project financed from bonds issued by the City or County pledging credit or a revenue resource.

Bridge: A structure, including supports, erected over a depression or an obstruction, as water, highway, or railway, and having a track or passageway for carrying traffic or other moving loads and having a length measured along the center of roadway of more than 20 feet between undercopings of abutments or extreme ends of openings for multiple boxes.

(Length) The length of a bridge structure is the over-all length measured along the line of survey stationing back to back of backwalls of abutments, if present, otherwise end to end of the bridge floor; but in no case less than the total clear opening of the structure.

(Roadway Width) The clear width measured at right angles to the longitudinal centerline of the bridge between the bottom or curbs or guard timbers or in the case of multiple height of curbs, between the bottom of the lower risers.

Budget Project: A project financed by funds from General Tax levies and shared revenue funds set aside in the annual budget adopted by the Council or Board of Supervisors.

Building: Any structure built for the support, shelter, or enclosure of persons, animals, chattel or movable property.

Building Code: A regulation adopted by the governing body establishing minimum standards of construction for the protection of the public health, safety, and welfare in terms of measured performance rather than in terms of rigid specification of materials and methods.

Calendar Day: Everyday shown on the calendar.

Call for Bids: The standard forms inviting proposals or bids.

"Careful and prudent manner" means conducting excavation in such a way that when it approaches within twenty-four inches of the underground facility located and marked by the owner or operator, by stakes, paint or in some customary manner, the exact location is manually determined, and the uncovered facility is supported and protected.

Change Order: A written order issued by the Engineer to the Contractor to make changes in the work or to perform extra work, and setting forth conditions for payment and/or adjustment in time of completion.

City: A municipal corporation, organized and existing under and by virtue of the laws of the State of Arizona.

City/County Clerk: The duly authorized person who performs the duties of clerk for the Contracting Agency.

Completion Time: The number of calendar days for completion of an act, including authorized time extensions. In case a calendar date of completion is shown in the proposal in lieu of the number of calendar days, the contract shall be completed by that date. The time within which an act is to be done shall be computed by excluding the first and including the last day; and if the last day be Sunday or a legal holiday, that shall be excluded.

Conflicting Utility: An existing utility, shown or not shown on the plans is conflicting when any part of the utility falls within the dimensions of the new installation, such that it would be in physical contact with the new installation.

Construction Project: The erection, installation, remodeling, alteration, of durable facilities upon, under, or over the ground. This shall include, but is not limited to buildings, roadways and utility pipes, lines, poles or other structures.

Contingent Bid Item: This is a minor bid item which is likely, but not certain, to occur during the course of work. If the Engineer determines that this work is required, the Contractor will accomplish the work and payment will be made based on the contingent unit bid price included in the proposal. Since the quality listed in the proposal is primarily for bid comparison, the amount of work required by the Engineer may vary materially from this.

Contract: The written instrument executed by the Contractor and the Contracting Agency by which the Contractor is bound to furnish all labor, equipment, and materials and to perform the work specified, and by which the Contracting Agency is obligated to compensate the Contractor therefor at the prices set forth therein. The Contract Documents are herewith by reference made a part of the contract as if fully set forth therein.

Contract Documents: All the integral documents of the contract, including but not limited to, Call for Bids, Plans, Standard Specifications and Details, Special Provisions, Proposal, Addenda, Performance Bond, Payment Bond, Certificates of Insurance, Ordinance, Contract, and Change Orders.

Contracting Agency: The legal entity that has contracted for the performance of the work or for whom the work is being performed.

Contractor: The individual, firm, partnership, corporation or combination thereof entering into a contract with the Contracting Agency to perform the advertised work.

Council: The City Council which by law constitutes the Legislative Department of the City.

County: Maricopa County, organized and existing under and by virtue of the laws of the State of Arizona.

Culvert: Any structure not classified as a bridge, which provides an opening under or adjacent to the roadway.

Days: Unless otherwise designated, days will be understood to mean calendar days.

Emergency: Unforeseen occurrences and combinations of circumstances involving the public welfare or the protection of work already done under the Contract Documents, or which endanger life or property and call for immediate action or remedy.

Engineer: The person, appointed as City or County Engineer by the Council or the Board of Supervisors, acting directly or through his duly authorized representative.

Equipment: (Construction) — All machinery and equipment, together with the necessary supplies for upkeep and maintenance, and also tools and apparatus necessary for the proper construction and acceptable completion of work. (Installed) — All material or articles used in equipping a facility as furnishings or apparatus to fulfill a functional design.

Extra Work: An item of work not provided for in the contract as awarded but found essential to the satisfactory completion of the contract within its intended scope.

Flooding: Flooding will consist of the inundation of the entire lift with water, puddled with poles or bars to insure saturation of the entire lift.

Force Account Work: Work done by personnel of the Contracting Agency as in-house work.

Foundation: For buildings or structures, this will be the substructure. For pipe this will be the native material or prepared material on which the pipe rests; normally, this is the bottom grade line of the trench.

Full Depth Pavement: An asphalt concrete pavement structure in which the granular base and subbase are replaced by proportionate thicknesses of asphalt concrete.

Improvement District Project: A project financed by assessments against the property included in a special assessment district authorized under, or implemented by an act of the legislature of the State and/or a procedural ordinance of the City or County.

Inspector: The Engineer's authorized representative assigned to make detailed inspections of contract performance.

Jetting: Jetting is the densification of material, using a continuous supply of water, under pressure, transmitted to the material through a rigid pipe of sufficient length to reach the bottom of the lift being densified. In all cases, the entire lift will be completely saturated working from the top to the bottom.

Laboratory: The established materials testing laboratory of the Contracting Agency's Engineering Department, or other laboratories acceptable to and/or authorized by the Engineer to test materials and work involved in the Contract.

Major Item: A major item shall be the total of any item of work and/or materials specified in the bid schedule that exceeds the amount established in Table 109-1.

Materials: Any substance specified in the project, equipment and other material used or consumed in the performance of the work.

Median: The portion of a divided highway separating the roadways used by traffic going in opposite directions.

Non Pay Item: An item of work for which no separate payment will be made under the proposal, but which must be included as an incidental cost for payment on an associated item included in the proposal.

Notice of Award: A letter from the City or County Clerk advising the Contractor that he is the successful bidder and the Council or Board of Supervisors has accepted his proposal.

Notice to Proceed: A directive issued by the Engineer, authorizing the Contractor to start the work or improvements required in the Contract.

Obligee: One to whom another is obligated.

Open Trench: The excavated area shall be considered as open trench until all the aggregate base course for pavement replacement has been placed and compacted or, if outside of a pavement area, until the excavated area is brought to finish grade or natural grade.

Owner: The City or County, acting through its legally constituted officials, officers or employees.

Pavement: Any surfacing of streets, alleys, sidewalks, courts, driveways, etc., consisting of mineral aggregate bound into a rigid or semi-rigid mass by a suitable binder such as, but not limited to, portland cement or asphalt cement.

Pavement Structure: The combination of subbase, base course, and surface course placed on a subgrade to support the traffic load and distribute it to the roadbed.

Pay Item: A detail of work for which separate payments are to be made under the Contract, as specified in the proposal.

Payment Bond: The security provided by the Contractor solely for the protection of claimants, supplying labor and materials to the Contractor or his Subcontractors.

Performance Bond: The security provided by the Contractor solely for the protection of the Contracting Agency and conditioned upon the faithful performance of the contract in accordance with the plans, specifications and conditions thereof.

Permit: The license to do construction in public rights-of-way and/or easements; issued by an Agency to a Contractor working for another party.

Plans: All approved drawings or reproductions thereof pertaining to the work and details therefor, which are made a part of the Contract Documents.

Plant: The Contractor's and/or subcontractor's facilities, including but not limited to small tools and mobile equipment, located on and/or offsite, necessary for preparation of materials and prosecution of work for the project.

Principal: The individual, firm or corporation primarily liable on an obligation, as distinguished from a surety.

Profile Grade: The trace of a vertical plan intersecting the top surface of the proposed wearing surface, usually along the longitudinal centerline of the roadbed. Profile grade means either elevation or gradient of such trace according to the context.

Project: A specific coordinated construction or similar undertaking identified by a single project number and bid and awarded as one contract. On occasion two or more projects may be bid and awarded as a single contract.

Proposal: The offer of a bidder on the prescribed form, to perform the work and to furnish the labor and materials at the prices quoted.

Proposal Form: The approved form on which the Contracting Agency requires bids to be prepared and submitted for the work.

Proposal Guarantee: The security furnished with a bid to guarantee that the bidder will enter into the contract if his bid is accepted.

Proposal Pamphlet: The book or pamphlet pertaining to a specific project, containing proposal forms, special provisions and other information necessary for and pertinent to the preparation of the proposal or bid.

Referred Documents: On all work authorized by the Contracting Agency, any referenced documents in the specification, i.e., Bulletins, Standards, Rules, Methods of Analysis or test. Codes and Specifications of other Agencies, Engineering Societies or Industrial Associations, refer to the Latest Edition thereof, including Amendments, which are in effect and published at the time of Advertising for Bids or the issuing of a permit for the work, unless otherwise stated.

Right-of-way: A general term denoting land, property, or interest therein, usually in a strip, acquired for or devoted to a street, highway, or other public improvement.

Road: A general term denoting a public way for purposes of vehicular travel, including the entire area within the right-of-way.

Roadside: A general term denoting the area adjoining the outer edge of the roadway. Extensive areas between the roadways of a divided highway may also be considered roadside.

Roadside Development: Those items necessary to the complete roadway which provide for the preservation of landscape materials and features; the rehabilitation and protection against erosion of all areas disturbed by construction through seeding, sodding, mulching and the placing of other ground covers; such suitable planting and other improvements as may increase the effectiveness and enhance the appearance of the roadway.

Roadway: The portion of the right-of-way intended primarily for vehicular traffic, and including all appurtenant structures and other features necessary for proper drainage and protection. Where curbs exist, it is that portion of roadway between the faces of the curbs.

Sewers: Conduits and related appurtenances employed to collect and carry off water and waste matter to a suitable point of final discharge.

Shop Drawings: Drawings or reproduction of drawings, detailing; fabrication and erection of structural elements, falsework and forming for structures, fabrication of reinforcing steel, installed equipment and installation of systems, or any other supplementary plans or similar data, which the Contractor is required to submit for approval.

Shoulder: The portion of the roadway contiguous with the traveled way for accommodation of stopped vehicles, for emergency use, and for lateral support of base and surface courses.

Sidewalk: That portion of the roadway primarily constructed for the use of pedestrians.

Special Provisions: The special conditions, requirements, additions, and/or revisions to the Standard Specifications, applicable to the work, to cover conditions or requirements peculiar to the project under consideration.

Specifications: The descriptions, directions, provisions, and requirement for performing the work as contained in the Contract Documents.

Standard Details: Uniform detail drawings of structures or devices adopted as Standard Details by the Engineer.

Standard Specifications: Uniform general specifications adopted as Standard Specifications by the Engineer.

Storm Drain: Any conduit and appurtenance intended for the reception and transfer of storm water.

Street: Streets, avenues, alleys, highways, crossings, lanes, intersections, courts, places, and grounds now open or dedicated or hereafter opened or dedicated to public use and public ways.

Structures: Bridges, culverts, catch basins, drop inlets, retaining walls, cribbing, manholes, endwalls, sewers, service pipes underdrains foundation drains, fences, swimming pools, and other features which may be encountered in the work and not otherwise classed herein.

Subbase: The lower course of the base of a roadway, immediately above the subgrade.

Subcontractors: Those having direct contracts with the Contractor and those who furnish material worked into a special design according to the Plans and Specifications for the work, but not those who merely furnish material not so worked.

Subgrade: The supporting structures on which the pavement and its special undercourses rest.

Substructure: All of that part of the structure or building below the bearings of simple and continuous spans, skewbacks of arches and tops of footings of rigid frames, together with the backwalls, wingwalls and wing protection railings.

Superintendent: The Contractor's authorized representative in responsible charge of the work.

Superintendent of Streets: The person duly appointed by the Council of the Contracting Agency, as provided by Sections 9-601 and 11-701 of the Arizona Revised Statutes.

Superstructure: The entire structure or building except the substructure.

Supplemental Specifications: Additions and revisions to the Standard Specifications that are adopted subsequent to issuance of the printed book.

Supplementary General Conditions: Requirements, or revisions, to the Standard General Conditions, applicable to the work, and to cover conditions or requirements peculiar to the project under consideration.

Surety: The individual, firm or corporation, bound with and for the Contractor for the acceptable performance, execution, and completion of the work, and for the satisfaction of all obligations incurred.

Surface Course: The finished or wearing course of an asphalt concrete pavement structure.

Title or Headings: The titles or headings of the sections and subsections herein are intended for convenience of reference and shall not be considered as having any bearing on their interpretation.

Township, City, Town or District: A subdivision of the County used to designate or identify the location of the proposed work.

Traveled Way: The portion of the roadway for the movement of vehicles, exclusive of shoulders and auxiliary lanes.

"Underground Facility" means any item which shall be buried or placed below ground for use in connection with the storage or conveyance of water, sewage, electronic, telephone or telegraphic communications, electric energy, oil, gas or other substances, and shall include, but not be limited to pipes, sewers, conduits, cables, valves, lines, wires, manholes, attachments and those portions of poles and their attachments below ground.

Utility: Pipe lines, conduits, ducts, transmission lines, overhead or underground wires, railroads, storm drains, sanitary sewers, irrigation facilities, street lighting, traffic signals, and fire alarm systems, and appurtenances of public utilities and those of private industry, businesses or individuals solely for their own use or use of their customers which are operated or maintained in, on, under, over or across public right-of-way or public or private easement.

Waterworks (Water Supply System): The reservoirs, pipe lines, wells, pumping equipment, purification works, mains, service pipes, and all related appliances and appurtenances utilized in the procurement, transportation and delivery of an adequate, safe, and palatable water supply for the Contracting Agency.

Work: Any or all of the improvements mentioned and authorized to be made, and the construction, demolition, reconstruction, and repair of all or any portion of such improvements, and all labor, services, incidental expenses, and material necessary or incidental thereto.

Working Day: A calendar day, exclusive of Saturdays, Sundays, and Contracting Agency recognized legal holidays, on which weather and other conditions not under the control of the Contractor will permit construction operations to proceed for the major part of the day with the normal working force engaged in performing the controlling item or items of work which would be in progress at that time.

101.3 In order to avoid cumbersome and confusing repetition of expressions in these specifications, it is provided that whenever anything is, or is to be, done, if, as, or, when, or where contemplated required, determined, directed, specified, authorized, ordered, given, designated, indicated, considered necessary, deemed necessary, permitted, reserved, suspended, established, approval, approved, disapproved, acceptable, unacceptable, suitable, accepted, satisfactory, unsatisfactory, sufficient, insufficient, rejected, or condemned, it shall be understood as if the expression were followed by the words by the Engineer or to the Engineer.

End of Section

SECTION 102

BIDDING REQUIREMENTS AND CONDITIONS

102.1 ELIGIBILITY AND PREFERENCE:

The employment of Contractors and Subcontractors on Public Works shall be governed by the provisions of Section 34-241 of the Arizona Revised Statutes.

102.2 CONTENTS OF PROPOSAL PAMPHLET:

The prospective bidder may examine and/or purchase plans, special provisions, and proposal pamphlets at the Engineering Office of the Contracting Agency advertising for bids.

The proposal pamphlet will state the location of the contemplated construction; give the description of the various quantities of work to be performed or materials to be furnished, and have a bid schedule of pay items for which unit bid prices are invited. In addition, it will state the form and amount of the proposal guarantee, the time in which the work shall be completed and include additional instructions not included in these specifications.

The plans, the standard specifications, the standard details, the special provisions, the contracting agency's supplements and all supplementary documents are essential parts of the contract, and a requirement occurring in one is as binding as though occurring in all. They are intended to be complementary and to describe and provide for a complete work. In a case of a discrepancy or conflict, the order in which the various documents shall govern is as follows from highest to lowest: special provisions, plans, agency's supplements to the standard specifications, agency's supplements to the standard details, standard specifications and standard details.

Each and every provision of law and clause required by law to be inserted in the contract shall be deemed to be inserted herein, and the contract shall be read and enforced as though it were included herein.

102.3 INTERPRETATION OF QUANTITIES IN PROPOSAL:

The quantities appearing in the proposal are approximate only and are to be used for the comparison of bids. Payment to the Contractor will be made only for the actual quantities of work performed and accepted or materials furnished in accordance with the contract at the unit bid price in the proposal.

After the contract is awarded the quantities of work listed by any pay item, or all pay items, may be increased or decreased a reasonable amount at the discretion of the Contracting Agency, without in any way invalidating the unit bid price.

102.4 EXAMINATION OF PLANS, SPECIAL PROVISIONS AND SITE OF WORK:

The Contracting Agency will prepare plans and special provisions in accordance with acceptable engineering standards, giving such direction as will enable any competent Contractor to carry them out.

The bidder shall examine the site of the proposed work and all documents pertaining to the work. It is mutually agreed that the submission of a proposal shall be considered prima facie evidence that the bidder has made such examination and is familiar with the character, quality and quantity of the work to be performed and material to be furnished.

Logs of the test holes, ground water levels, and any accompanying soil reports as furnished by the Contracting Agency are furnished for general information only. The field condition so set forth shall not constitute a representation or warranty, expressed or implied, that such conditions are actually existent. Bidders shall make their own investigations and form their own estimates of the site conditions.

After the submission of the proposal, no complaint or claim that there was any misunderstanding as to the quantities, conditions or nature of the work will be entertained.

102.5 PREPARATION OF PROPOSAL:

The bidder shall submit his proposal on the forms obtained from the Contracting Agency. The bidder shall specify a unit bid price and extension in words, figures or both, whichever is required, for each pay item where units and approximate quantities are given.

The proposal total will be obtained by adding the extension amount or lump sum indicated for the individual pay items. If there is a conflict between words and figures, the words shall apply. If there is a conflict between the unit bid price and the extension for a particular pay item, the unit bid price shall govern. In either case, the Contracting Agency shall correct the discrepancy in accordance with the above procedure and the corrected proposal total will apply.

In addition, the following shall be completed by the bidder on the proposal:

(A) Acknowledge receipt of and agree that the proposal is based on the listed Addenda received with and/or after receipt of the proposal pamphlet.

(B) Note the bidders Arizona State Contractor's License number and classification.

(C) Signatures in ink and attested or witnessed as applicable.

102.6 SUBCONTRACTORS' LIST:

When required, the List of Subcontractors' form will be attached to the proposal pamphlet. The bidder shall submit this form with his proposal, in a separate sealed envelope, listing the firm name and business address of each specialty subcontractor to whom he proposes to subcontract any portion of the work. Only one name shall be listed for each category.

The bidder may list himself to perform one or more of the listed categories of work for which he has any requisite State licenses when required.

102.7 IRREGULAR PROPOSALS:

Proposals will be considered irregular and may be rejected for the following reasons:

(A) If the proposal is on a form other than that furnished by the Contracting Agency; or if the form is altered or any part thereof is detached.

(B) If there are unauthorized additions, statements, conditional or alternate bids, or irregularities of any kind.

(C) If the bidder adds any provisions reserving the right to accept or reject an award, or to enter into a contract pursuant to an award.

(D) If the proposal does not contain a unit price for each pay item listed except in the case of authorized alternate pay items.

(E) If, when required, the bidder fails to accomplish and submit the List of Subcontractors' form.

102.8 PROPOSAL GUARANTEE:

No proposal will be read unless accompanied by a proposal guarantee in the proper amount and in the form provided in the proposal pamphlet. The guarantee shall be made payable and acceptable to the Contracting Agency as a guarantee that the bidder, if awarded the contract, will execute the contract documents and furnish the required bonds and certificates of insurance to be forfeited if the Contractor fails or refuses to enter into a contract as required by the bid documents.

The proposal guarantee shall be in the form of a certified check, cashiers check, or surety bond for ten percent of the amount of the bid. The surety bond shall be executed solely by a surety company or companies holding a certificate of authority to transact surety business in the State of Arizona issued by the Director of the Department of Insurance. The surety bond shall not be executed by an individual surety or sureties. In addition, said company or companies shall be rated "Best A-" or better as required by the Contracting Agency, as currently listed in the most recent Best Key Guide, published by the A.M. Best Company.

102.9 SUBMISSION OF PROPOSAL:

The proposal and proposal guarantee shall be submitted in a sealed envelope. The outside, lower right-hand corner of which shall be marked as follows:

Bid of _____, Contractor
For _____
_____ Project No. _____ Contracting Agency

Envelopes shall be mailed or delivered to the office of the Contracting Agency, and must be received before the time and date specified in the Call for Bids or any Addenda.

Proposals received after the time and date specified will be returned, unopened, to the bidder.

102.10 WITHDRAWAL OR REVISION OF PROPOSAL:

Any bidder may withdraw or revise a proposal after it has been deposited with the Contracting Agency, provided his request is received by the Contracting Agency, in writing or by telegram, before the time specified for opening proposals or as stipulated herein.

102.11 PUBLIC OPENING OF PROPOSALS:

Proposals will be opened and read publicly at the time and place specified in the Call for Bids or any Addenda. Bidders, their authorized agents and other interested parties are invited to be present.

When proposals for more than one project are to be opened at the same time, any bidder may, after the time set for the opening proposals, request to withdraw his second or succeeding proposal prior to the opening of proposals for that project. Should this occur, there will be a brief delay in the opening of proposals to permit the bidder to submit his request. Upon receipt of the bidder's written request, by the Contracting Agency, his proposal will be returned unopened.

102.12 DISQUALIFICATION OF BIDDERS:

Either of the following reasons may be considered as being sufficient for the disqualification of a bidder and the rejection of his proposal:

(A) Receipt of more than one proposal for the same work from an individual, partnership or corporation under the same or different names.

(B) Evidence of collusion among bidders or assistance from any officer of the Contracting Agency, or of any Department thereof.

102.13 SUCCESSFUL BIDDERS:

Unless otherwise specified in the proposal pamphlet, the successful bidder may obtain 7 sets of plans and special provisions, for the project from the Contracting Agency, at no cost.

End of Section

SECTION 103

AWARD AND EXECUTION OF CONTRACT

103.1 CONSIDERATION OF PROPOSALS:

After the proposals, for the contemplated work, have been opened and read as provided in these specifications, the respective totals will be checked and compared by the Contracting Agency. The basis of comparison will be to verify the accuracy of the total proposal by checking the extensions and additions. In the event of a discrepancy, in the amount bid for a pay item, the unit bid price will govern unless obviously in error. The results of such comparison will be considered public information.

The right is reserved to award the contract to the lowest and/or best responsible bidder, or to reject all proposals and to readvertise for any reason the Contracting Agency determines.

In case all proposals are rejected, any subsequent changes, additions, addenda, or new sets of plans and special provisions will be provided to all purchasers of the first issue of the plans and special provisions at no additional charge, except that out-of-town bidders will pay shipping charges.

103.2 RETURN OF PROPOSAL GUARANTEE:

All proposal guarantees, except those of: the two lowest responsible bidders on Bond Issue and Budget Projects; the lowest responsible bidder or the lowest responsible bidders of alternative plans and specifications on Improvement District Projects, will be returned immediately following the opening and checking of proposals. The retained proposal guarantee or guarantees will be returned immediately after the contract documents have been executed by all parties.

103.3 AWARD OF CONTRACT:

The Contracting Agency, through its duly authorized body or agent will award the contract to the lowest and/or best responsible bidder, or all proposals will be rejected, as soon as practicable after the date of opening proposals.

No proposal shall be withdrawn for a period of 50 days after opening without consent of the Contracting Agency through the body or agent duly authorized to accept or reject the proposal except that in the case of Federally-assisted projects, or other projects award of which is conditioned on the approval of an agency not under the control of the Contracting Agency, withdrawal shall be made within a period of 50 days after opening without such consent.

If written notice of the acceptance of a proposal is delivered to the successful bidder within the times noted above, or at any time thereafter before such proposal has been withdrawn, the bidder shall execute and deliver a contract in the prescribed form, within 10 days after receipt of such notice or his proposal guarantee shall be forfeited as provided elsewhere herein. Concurrently with the contract, the Contractor shall submit all documentation required to enable the agency to execute the contract.

The successful bidder will be furnished a Notice of Award on:

(A) Bond Issue or Budget Projects by letter, to the address shown on the proposal.

(B) Improvement District Projects by publication in accordance with the requirements of ARS, Section 9-681.

103.4 CANCELLATION OF AWARD:

The Contracting Agency reserves the right to cancel the award of any contract at any time before the execution of said contract by all parties, without any liability against the Contracting Agency.

103.5 REQUIREMENT OF CONTRACT BONDS:

Concurrently with the submittal of the contract, the Contractor shall furnish the Contracting Agency the following bonds, which shall become binding upon the award of the contract to the Contractor.

(A) A Performance Bond in an amount equal to the full contract amount conditioned upon the faithful performance of the contract in accordance with plans, specifications and conditions thereof. Such bond shall be solely for the protection of the Contracting Agency awarding the contract.

(B) A Payment Bond in an amount equal to the full contract amount solely for the protection of claimants supplying labor or materials to the Contractor or his Subcontractors in the prosecution of the work provided for in such contract.

Each such bond shall include a provision allowing the prevailing party in a suit on such bond to recover as a part of his judgement such reasonable attorney's fees as may be fixed by a judge of the court.

Each such bond shall be executed by a surety company or companies holding a certificate of authority to transact surety business in the State of Arizona issued by the Director of the Department of Insurance. The bonds shall not be executed by an individual surety or sureties. The bonds shall be made payable and acceptable to the Contracting Agency. The bonds shall be written or countersigned by an authorized representative of the surety who is either a resident of the State of Arizona or whose principal office is maintained in this State, as by law required, and the bonds shall have attached thereto a certified copy of Power of Attorney of the signing official. In addition, said company or companies shall be rated "Best A-" or better as required by the Contracting Agency, as currently listed in the most recent Best Key Rating Guide, published by the A.M. Best Company.

103.6 CONTRACTOR'S INSURANCE:

103.6.1 General: The Contractor shall agree to carry all insurance which may be required by Federal and State Laws, County and City Ordinances, Regulations and Codes. Neither the Contractor nor any subcontractor shall commence work under a contract until the Contracting Agency has approved the insurance. The entire project covered by the contract will be at the Contractor's risk until final acceptance by the Contracting Agency.

Concurrently with the submittal of the contract, the Contractor shall furnish the Contracting Agency the following:

(A) **Public Liability and Property Damage Insurance:** The Contractor shall provide and maintain, during the life of the contract, General Liability, Automobile Liability, and Worker's Compensation Insurance as follows:

INSURANCE	MINIMUM LIMITS OF LIABILITY
GENERAL LIABILITY Comprehensive Form Premises/Operations Underground Explosion and Collapse Hazard Exclusions Deleted (where applicable) Products/Completed Operations Contractual Independent Contractors (OCP) Broad Form Property Damage Personal Injury With Exclusion "C" Deleted	$1,000,000 Combined Single Limit —
AUTOMOBILE LIABILITY Owned Hired Non-Owned	$1,000,000 Combined Single Limit
EXCESS LIABILITY Umbrella Form	As required
WORKER'S COMPENSATION & EMPLOYERS' LIABILITY	Statutory Limits
BUILDER RISK/COURSE OF CONSTRUCTION	As required

The Contracting Agency shall have no responsibility or liability for such insurance coverage.

The Contractor shall furnish a Certificate of Insurance on a form approved by the Contracting Agency. The Certificate shall be issued by an insurance company authorized to transact business in the State of Arizona, or be named on the list of Unauthorized Insurers maintained by the Arizona Department of Insurance. Insurance coverage shall not expire until all the work has been completed and the project has been accepted by the Contracting Agency. If an insurance policy does expire during the life of the contract, the Contractor shall provide a renewal certificate of the required insurance coverage to the Contracting Agency not less than thirty (30) days prior to the expiration date.

(B) **Worker's Compensation and Employer's Liability:** A Letter of Certification, from the Industrial Commission of Arizona, that the Contractor is insured by the State Compensation Fund or is an authorized self-insurer or a Certificate of Insurance issued by an insurance company authorized by the Arizona Department of Insurance to provide Workmen's Compensation and Employer's Liability Insurance in the State of Arizona.

(C) **Builders Risk/Course of Construction:** When the project includes construction of a new building or addition to an existing building, the Contractor shall also obtain insurance coverage for at least, as a minimum, the perils of fire, extended coverage, vandalism and malicious mischief for the full amount of the contract. The Contractor shall be responsible for any deductibles, mutual waiver of subrogation and any co-insurance for the construction that is the subject of this contract.

(D) **Additional Insured:** The Contracting Agency, its officers, agents and employees shall be named as insureds on policies listed in (A) and (C) and this shall also be indicated on the Certificates of Insurance issued to the Contracting Agency. The Contractor's coverage shall be primary for any and all losses arising out of the performance of this contract.

103.6.2 Indemnification of the Contracting Agency Against Liability: The Contractor agrees to indemnify and save harmless the Contracting Agency, its officers, agents and employees, and any jurisdiction or agency issuing permits for any work included in the project, their officers, agents and employees, hereinafter referred to as Indemnitee, from all suits, including attorney's fees and cost of litigation, actions, loss, damage, expense, costs or claims, of any character or any nature arising out of the work done in fulfillment of the terms of this contract or on account of any act, claim or amount arising or recovered under Workmen's Compensation Law, or arising out of the failure of the Contractor or those acting under Contractor to conform to any statues, ordinances, regulations, law or court decree. It is the intent of the parties to this contract that the Indemnitee shall, in all instances, except for loss or damage resulting from the sole negligence of the Indemnitee, be indemnified against all liability, loss or damage of any nature whatever for or on account of any injuries or death of person or damages to or destruction of property belonging to any person arising, out of or in any way connected with the performance of this contract, regardless of whether or not the liability, loss or damage is caused by, or alleged to be caused in part by the negligence, gross negligence or fault of the indemnitee. It is agreed that the Contractor will be responsible for primary loss investigation, defense and judgment costs where this contract of indemnity applies.

103.7 EXECUTION AND APPROVAL OF CONTRACT:

The Contractor shall execute the contract with the Contracting Agency as follows:

(A) Bond Issue or Budget Projects within 10 calendar days after the date of Notice of Award of contract from the Contracting Agency.

(B) Improvement District Projects, not less than 15 or more than 20 calendar days after the date of the first publication of Notice of Award, if no objections have been filed.

The Contracting Agency will approve and execute the contract within 10 calendar days following receipt of signed contract and acceptable bonds and certificates of insurance.

No contract shall be considered in effect until it has been fully executed by all parties concerned.

Information relative to the execution of contract documents may be obtained from the Engineering Office of the Contracting Agency advertising for bids.

103.8 FORFEITURE OF PROPOSAL GUARANTEES:

If the Contractor fails or refuses to enter into the contract, within the time stated, then the Contracting Agency may declare a forfeiture of his proposal guarantee as liquidated damages for failure to enter into the contract.

End of Section

SECTION 104

SCOPE OF WORK

104.1 WORK TO BE DONE:

104.1.1 General: The Contractor shall perform all work as may be necessary to complete the contract in a satisfactory and acceptable manner in full compliance with the plans, specifications and terms of the contract.

Unless otherwise specified in the special provisions, he shall furnish all labor, materials, equipment, transportation, utilities, services and facilities required to perform all work for the construction of the project within the time specified.
All existing concrete or bituminous surfaced sidewalks, driveways and alleys which were disturbed by the Contractor at the direction of the Engineer, shall be replaced. Private concrete or bituminous surfaced sidewalks and driveways, which were disturbed by the new improvements must be replaced. The slope of the replaced sidewalk or driveway must comply with the agency's minimum standards. If the standard cannot be constructed within the disturbed area, the Contractor shall remove and replace to a distance required to obtain the slope. Payment for such work will be made under the respective pay items provided for in the contract, or by agreed prices in advance, if no pay items are provided for in the contract.

104.1.2 Maintenance of Traffic: The Contractor's operations shall be in accordance with the traffic manual and/or policies of the appropriate public agency having jurisdiction over the project and Section 401. These operations shall cause no unnecessary inconvenience to the public and public access rights shall be considered at all times. Unless otherwise authorized in the specifications or on a temporary basis by the Engineer, traffic shall be permitted to pass through the work area. The Contractor shall coordinate with the various agencies both commercial and public, involved in the collection and removal of trash and garbage, so that adequate services are maintained.

Safe and adequate pedestrian and vehicular access shall be provided and maintained to fire hydrants, commercial and industrial establishments, churches, schools, parking lots, motel, hospitals, fire stations, police stations, and establishments of a similar nature. Access to residential properties shall be in accordance with Section 107.

Grading operations, roadway excavation and fill construction shall be conducted and maintained in such a manner as to provide a reasonably satisfactory and safe surface for vehicular and pedestrian traffic. When rough grading is completed, the roadbed shall be brought to and maintained in a reasonably smooth condition, satisfactory and safe for vehicular traffic at the posted speed limit. Pedestrian walkways shall be provided and maintained in a like manner. The Contractor shall accomplish any additional grading operations and/or repairs, including barricade replacement or repairs during working and nonworking periods which, in the opinion of the Engineer, are required.

In the event of abnormal weather conditions, such as windstorms, rainstorms, etc., the Contractor shall immediately inspect his work area and take all necessary actions to insure that public access and safety are maintained.

The Contractor shall provide the Engineer with the emergency address of his representatives as required by Section 105.

104.1.3 Cleanup and Dust Control: Throughout all phases of construction, including suspension of work, and until final acceptance of the project, the Contractor shall keep the work area clean and free from rubbish, excess materials and debris generated by Construction Activities.

At disposal sites and storage sites, other than agency landfills, the Contractor shall be responsible for all required dust control measures. This includes temporary yard or staging areas.

The Contractor shall take whatever steps, procedures or means required to prevent any dust nuisance due to his construction operations. The dust control measures shall be maintained at all times to the satisfaction of the Engineer and in accordance with the requirements of the Maricopa County Bureau of Air Pollution Control Rules and Regulations.

Failure of the Contractor to comply with the Engineer's cleanup orders may result in an order to suspend work until the condition is corrected. No additional compensation or time will be allowed as a result of such suspension and the Engineer has the authority to take such other measures as may be necessary to remedy the situation. Subsection 104.2.5 applies.

104.1.4 Final Cleaning Up: Before final acceptance, all private or public property and grounds occupied by the Contractor in connection with the work shall be cleaned of all rubbish, excess materials, temporary structures and equipment, and all parts of the work area shall be left in an acceptable condition.

104.2 ALTERATION OF WORK:

***104.2.1 By the Contracting Agency:** The Contracting Agency reserves the right to make, at anytime during the progress of the work, such alterations in the details of construction and such increases or decreases in quantities as may be found necessary or desirable. Such alterations and changes shall not invalidate the contract nor release the surety and the Contractor agrees to perform the work as altered, the same as if it had been a part of the original contract. The Engineer will issue Change Orders to cover unforeseen circumstances which make it impossible to carry out the work in accordance with the original contract plans and specifications.

If the alterations or changes made by the Contracting Agency increases or decreases the total cost of the contract or the total cost of any major item by more than 20 percent, either party may request an adjustment in payment in accordance with Section 109.

104.2.2 Due to Physical Conditions:

*A) Should the Contractor encounter or discover during the process of the work, subsurface or latent physical conditions at the site differing materially from those indicated in the contract, or unknown physical conditions at the site of an unusual nature, differing materially from those ordinarily encountered and generally recognized as inherent in work of the character provided for in the contract, the Engineer shall be promptly notified in writing of such conditions before they are disturbed. The Engineer will thereupon promptly investigate the conditions and, if he finds they do so materially differ and cause an increase or decrease in the cost of or the time required for performance of the contract, an equitable adjustment will be made and the contract modified in writing accordingly.

*B) If at the time of opening up any portion of the work, material from which the subgrade, backfill or bedding is to be constructed contains an excess of moisture so that the required compaction cannot be obtained without additional manipulation, the Engineer will determine the cause of such condition. If the cause of such condition is determined to have been unforeseeable and beyond the control of and without fault or negligence of the Contractor, the Engineer will determine whether the material shall be aerated or removed and replaced. Such work shall be done as directed and will be paid for as provided in Section 109.

*C) Failure to notify the Engineer of the conditions described in A and B above prior to doing any work may be just cause to reject any claims for additional monies and/or time.

D) Material in ditches and ditch banks that contains moisture in an amount considered excessive by the Engineer shall be removed and shall be aerated to the extent required by the Engineer before compaction is effected. No measurement or direct payment for the removal and aeration of such material will be made.

E) After any portion of the work has been opened up, saturation of material caused by irrigation water, storm drainage, weather or such similar causes will be considered as within the responsibility of the Contractor.

***104.2.3 Due to Extra Work:** The Contractor shall perform unforeseen work, for which there is no unit bid price in the proposal, whenever it is deemed necessary or desirable by the Engineer in order to fully complete the work as contemplated. Such work shall be governed by all applicable provisions of the contract documents and payment will be made in accordance with the provisions set forth in Section 109.

Should the Contractor claim that any instructions received involve extra work under the contract, he shall give the Engineer written notice within two work days after receipt of such instructions, and in any event before proceeding to execute the work, except in emergencies endangering life or property. No claim shall be valid unless written notice is given.

If this extra work is performed by others, the Contractor agrees to cooperate fully with the other source accomplishing this work and agrees that this action shall not invalidate the Contract or release the surety.

---

*Not applicable to Improvement District Projects.

104.2.4 At the Contractor's Request: Changes in the plans or specifications, which do not materially affect and are not detrimental to the work or to the interests of the Contracting Agency, may be granted to facilitate the work. Requests shall be in writing and submitted to the Engineer for approval. These changes, if approved and when resulting in a saving to the Contractor, will be made at an equitable reduction in cost or in no case at any additional cost to the Contracting Agency.

104.2.5 Due to the Failure of the Contractor to Properly Maintain the Project:

A) If the Contractor fails to provide adequate Maintenance of Traffic or Cleanup and Dust Control or to correct deficiencies resulting from abnormal weather conditions, the Engineer has the authority to suspend the work wholly or in part until this condition has been corrected.

B) If the Contractor fails to comply with the Engineer's written order to provide adequate maintenance of traffic, cleanup, dust control, or to correct deficiencies resulting from abnormal weather conditions, the Engineer has the authority to have this work accomplished by other sources.

C) The Contractor agrees to cooperate fully with the other source accomplishing this work and agrees that this action shall not invalidate the Contract or release the surety.

End of Section

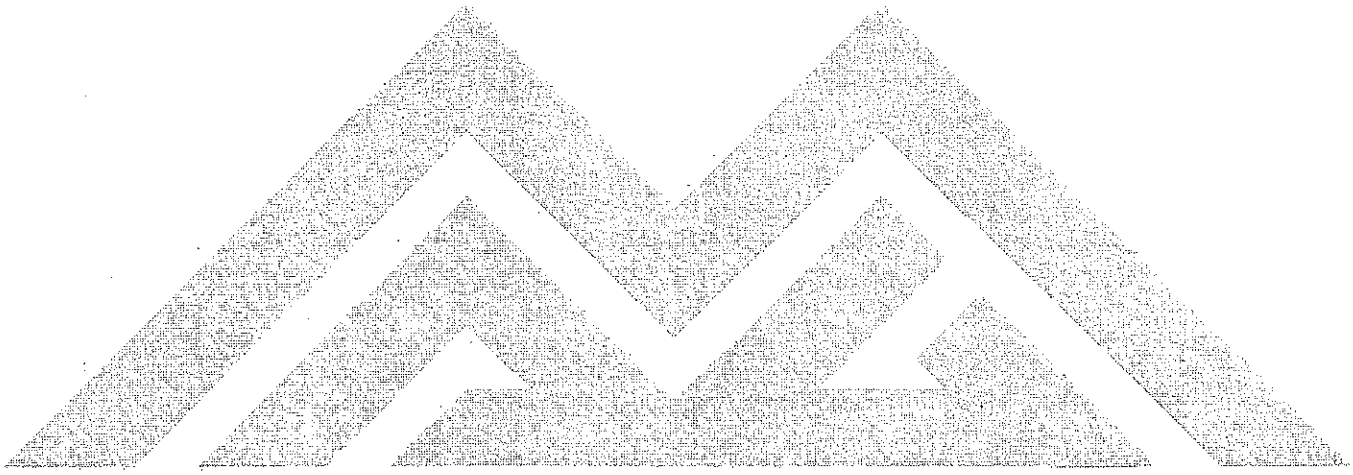

SECTION 105

CONTROL OF WORK

105.1 AUTHORITY OF THE ENGINEER:

The Engineer will decide all questions which may arise as to the quality and acceptability of materials furnished and work performed and as to the rate of progress of the work; all questions which may arise as to the interpretation of the plans and specifications; all questions as to the acceptable fulfillment of the contract on the part of the Contractor. The Engineer's estimates and decisions shall be final and conclusive. In case any question should arise, relative to the Contract Documents, the determination or decision of the Engineer shall be a condition precedent to the right of the Contractor to receive final approval of the work being questioned under the contract.

In giving instructions, the Engineer may make minor changes in the work, not involving extra work and not inconsistent with the purpose of the work, except in emergencies endangering life or property.

The Engineer will suspend the work wholly or in part due to the failure of the Contractor; to correct conditions unsafe for the workmen or the general public; for failure to carry out provisions of the contract; for failure to carry out orders; for such periods as he may deem necessary due to unsuitable weather; for conditions considered unsuitable for the prosecution of the work or for any other condition or reason deemed to be in the public interest.

105.2 PLANS AND SHOP DRAWINGS:

The Contractor shall submit, for review, a proposed schedule of shop drawings and product data submittals. This schedule will include concrete and asphalt concrete mix designs unless they are previously approved supplier's mix design. The schedule will show the needed response date for each submittal and will indicate the relationship of the submittal to the project construction schedule.

The Contractor shall submit five (5) copies of each shop drawing, product data or mix design to the Engineer for review. Each submittal shall be numbered sequentially and shall be submitted in accordance with the schedule established in conjunction with the Contracting Agency so as to cause no delay in the work schedule. The Contractor shall certify, by stamp or letter, that he has reviewed and approved the submittal and that it conforms to the requirements of the contract documents. If this certification is not included, the submittal will be returned without action.

At the time of each submittal, the Contractor shall define and delineate in writing, separate from the certification, any deviations from the contract documents. If the Engineer accepts this deviation, he will authorize the deviation by issuing a change order or if the deviation is minor by endorsement to the letter.

The Engineer will review and return the submittals in accordance with the previously established response date. The review will be only for conformance with the design concept of the work and for compliance with the information contained in the contract documents. The review of a specified item, as such, will not indicate review of the assembly in which the item functions. Review by the Engineer will not relieve the Contractor from responsibility for any errors or omissions in the submittals nor from his responsibility for complying with the contract documents. The only exception is deviations accepted in accordance with the preceding paragraph.

If the submittal is acceptable, one (1) copy with each page stamped "Furnish as Submitted" will be returned to the Contractor. The Contractor shall submit additional copies (as required) to the Engineer.

If the Engineer determines that the submittal requires corrections or is to be rejected, one (1) copy stamped "Furnish as Noted" or "Revise and Resubmit" will be returned to the Contractor. The Contractor will submit five (5) corrected or new copies.

The copy stamped "Furnish as Submitted," returned to the Contractor, will become a part of the contract documents and will be kept at the job site. Any work done prior to the receipt of this review will be at the Contractor's risk and expense.

105.3 CONFORMITY WITH PLANS AND SPECIFICATIONS:

All work performed and all materials furnished shall be in conformity with the lines, elevations, grades, cross sections, dimensions and material requirements, including tolerances, shown on the plans or indicated in the specifications.

In the event the Engineer finds the materials or the finished product in which the materials are used not in conformity with the plans and specifications, but that reasonably acceptable work has been produced, he shall then make a determination if the work shall be accepted and remain in place. In this event, the Engineer will document the basis of acceptance by contract modification which will provide for an appropriate adjustment in the contract price for such work or materials as he deems necessary to conform to his determination based on engineering judgement.

In the event the Engineer finds the materials or the finished product in which the materials are used or the work performed are not in conformity with the plans and specifications and have resulted in an inferior or unsatisfactory product, the work or materials shall be removed and replaced or otherwise corrected by the Contractor at no additional cost to the Contracting Agency.

In all instances wherein the items and/or specifications require installation or construction in accordance with either manufacturers' or suppliers' recommendations and/or instructions, said recommendations and/or instructions shall be submitted with the applicable portion clearly marked for approval prior to the commencement of work on that item or portions of the contract.

105.4 COORDINATION OF PLANS AND SPECIFICATIONS:

The Contractor shall take no advantage of any apparent error or omission in the plans or specifications. In the event the Contractor discovers such an error or omission, he shall immediately notify the Engineer. The Engineer will then make such corrections and interpretations as may be deemed necessary for fulfilling the intent of the plans and specifications.

105.5 COOPERATION OF CONTRACTOR:

The Contractor will be supplied with a minimum of seven sets of approved plans and special provisions, one set of which the Contractor shall keep available on the work at all times.

The Contractor shall give the work the constant attention necessary to facilitate the progress thereof, and shall cooperate with the Engineer, his inspectors, and other Contractors in every way possible.

The Contractor shall at all times be present at the work in person or represented by a competent superintendent authorized to receive and fulfill instructions from the Engineer and who shall supervise and direct the work. Instructions and information given by the Engineer to the Contractor's superintendent shall be considered as having been given to the Contractor.

(A) All phases of the project such as concrete work, pipe work, etc., shall be under the direct supervision of a foreman or his designated representative on the site who shall have authority to accept instructions, with respect to that particular phase of the project, and take action required to properly carry out the work.

(B) In the event of noncompliance with the above, the Engineer may require the Contractor to stop work on that part of the project until the required supervision is present.

The Contractor shall file with the Engineer, the names, addresses, and telephone numbers of representatives who can be contacted, at any time, in case of emergency. These representatives must be fully authorized and equipped to correct unsafe or excessively inconvenient conditions on short notice.

Emergencies may arise during the progress of the work which may require special effort or require extra shifts of men to continue the work beyond normal working hours. The Contractor shall be prepared in case of such emergencies from whatever cause, to do all necessary work promptly.

105.6 COOPERATION WITH UTILITIES:

The Contracting Agency will notify all utility companies, all pipe line owners, or other parties affected, and endeavor to have all necessary adjustments of the public or private utility fixtures, pipe lines, and other appurtenances within or adjacent to the limits of construction, made as soon as practicable.

The Contractor shall comply with the requirements of ARS-40-360.21 through 40-360.29 (one call system, Blue Stake) in notification to the interested utility owners prior to start of construction. The Contractor shall resolve all problems with the utility owners concerned.

Where water users association facilities obstruct construction of the work, the Contractor shall contact officials of the association relative to the shutdown of irrigation water and shall acquaint himself with and conform to the requirements of the association.

Water lines, gas lines, wire lines, service connections, water and gas meter boxes, water and gas valve boxes, light standards, cableways, signals and all other utility appurtenances within the limits of the proposed construction which are to be relocated or adjusted are to be moved by the owners at their expense except as otherwise provided for in the special provisions or as noted on the plans. In the event an existing service is found to be in a materially different location than shown on the plans and requires additional or more costly work on the part of the Contractor, the procedures in Section 104, will apply.

It is understood and agreed that the Contractor has considered in his proposal all of the permanent and temporary utility appurtenances in their present or relocated positions as shown on the plans and that no additional compensation will be allowed for any delays, inconvenience, or damage sustained by him due to any interference from the said utility appurtenance or the operation of moving them. If delays are encountered because utility owners have not relocated or adjusted their facilities, the contract time will be adjusted in accordance with Section 108.

It shall be the responsibility of the Contractor to ascertain the need for bracing or shoring of utility poles during the construction of the project and no additional compensation will be allowed for such bracing or shoring.

In general, the contract will indicate various utility items, certain of which are to be relocated or adjusted by the utility owner and others by the Contractor. Any work performed by the Contractor for any utility company, separate from the contract shall be paid for by the utility company and will not be a part of the agency contract.

105.6.1 Notifications Requirement in the Event of Any Damage to or Dislocation of Underground Facilities: In the event of any damage to or dislocation of any underground facility, the Contractor responsible for the excavation operation shall immediately notify the owner of such facility and shall not attempt to repair any facility, except those intended for the conveyance or storage of water and sewage. The excavation shall be left open until the arrival of representatives of the owner. The owner will dispatch its representative promptly to examine the underground facility and, if necessary, make repairs.

105.6.2 Work Within a Railroad Right of Way: When a railroad right of way is included in the work, the Contractor shall:

(A) Comply with the rules and regulations of the railroad company relative to the required manner of constructing said portion of the work; and shall perform the work so as not to endanger or interfere with the safe operation of the track(s) and property of the railroad company and of the traffic moving on such track(s).

(B) Carry the kinds and amounts of insurance and bonds required by the railroad company for the period of time in which work is performed on or adjacent to the railroad company's property, and until such work has been satisfactorily completed and all tools, equipment and materials have been removed from the railroad company's property and such property is left in a clean and presentable condition.

(C) Contact the railroad company at least 48 hours in advance of performing any construction within the right of way of any track(s).

105.7 COOPERATION BETWEEN CONTRACTORS:

The Contracting Agency reserves the right at any time to contract for and perform other or additional work on or near the work covered by the contract.

When separate contracts are let within the limits of any one project, each Contractor shall conduct his work so as not to interfere with or hinder the progress or completion of the work being performed by other Contractors. Contractors working on the same project shall cooperate with each other as directed.

Each Contractor involved shall assume all liability, financial or otherwise, in connection with his contract and shall protect and save harmless the Contracting Agency from any and all damages or claims that may arise because of inconvenience, delay, or loss experienced by him because of the presence and operations of other Contractors working within the limits of the same project.

The Contractor shall arrange his work and shall place and dispose of the materials being used so as not to interfere with the operations of the other Contractors within the limits of the same project. He shall join his work with that of others in an acceptable manner and shall perform it in proper sequence to that of the others.

The Contracting Agency will not honor any claim for extra compensation due to delays, extra work, or extension of time caused by any other Contractors working within the limits of the same project.

105.8 CONSTRUCTION STAKES, LINES AND GRADES:

The Engineer will set construction stakes establishing lines and grades for road work, curbs, gutters, sidewalks, structures and centerlines for utilities and necessary appurtenances as he may deem necessary, he will furnish the Contractor with all necessary information relating to the lines and grades. These stakes and marks shall constitute the field control by and in accordance with which the Contractor shall establish other necessary controls and perform the work.

The Contractor shall perform the work in accordance with the Engineer's stakes and marks, and shall be charged with full responsibility for conformity and agreement of the work with such stakes and marks.

The Contractor shall be held responsible for the preservation of all stakes and marks, and if the construction stakes or marks have been carelessly or willfully destroyed or disturbed by the Contractor, the cost for replacing them will be charged against him and will be deducted from the payment for the work.

The Contractor shall give notice to the Engineer not less than 2 working days in advance of when he will require survey services in connection with any portion of the work.

The Contractor shall set the construction stakes for buildings establishing lines, grades, and elevations to include necessary utilities and appurtenances and shall be responsible for their conformance with plans and specifications. The Engineer will establish or designate a control line or bench mark of known location and elevation for use as a reference.

105.9 DUTIES OF INSPECTOR:

The Engineer may provide the Inspector, assistants, and other field staff to assist the Engineer in observing performance of the work of the Contractor. Through onsite observations of the work in progress and field checks of materials and equipment, the Inspector shall endeavor to provide further protection for the Contracting Agency against defects and deficiencies in the work of the Contractor; but, the furnishing of such services will not make the Inspector responsible for or give the Inspector control over construction means, methods, techniques, sequences, or procedures or for safety precautions or programs, or responsibility for the Contractor's failure to perform the work in accordance with the contract documents.

Inspectors employed by the Contracting Agency will be authorized to inspect all work done and materials furnished. Such inspection may extend to all or any part of the work and to the preparation, fabrication or manufacture of the materials to be used. The inspector will not be authorized to alter or waive the provisions of the contract. The inspector will not be authorized to issue instructions contrary to the plans and specifications or to act as foreman for the Contractor.

The inspector will, however, have the authority to reject work or materials until any questions at issue can be referred to and decided by the Engineer.

105.10 INSPECTION OF WORK:

Inspection of the work by the Engineer or his authorized representative shall not be considered as direct control of the individual workman and his work. The direct control shall be solely the responsibility of the Contractor's foreman and superintendent.

The Engineer shall be permitted to inspect all materials, and each part or detail of the work at any time for the purpose of expediting and facilitating the progress of the work. He shall be furnished with such information and assistance by the Contractor as is required to make a complete and detailed inspection.

Any work done or materials used without supervision and inspection by an authorized Contracting Agency representative may be ordered removed and replaced at no additional cost to the Contracting Agency. Failure to reject any defective work or materials shall not in any way prevent later rejection when such defect is discovered nor obligate the Engineer to final acceptance.

When any unit of government or political subdivision is to pay a portion of the cost of the work covered by the contract, its representatives shall have the right to inspect the work. Such inspection shall in no sense make any unit of government or political subdivision a party to the contract, and shall in no way interfere with the rights of either party to the contract.

105.11 REMOVAL OF UNACCEPTABLE AND UNAUTHORIZED WORK:

Unacceptable work, whether the result of poor workmanship, use of defective materials, damage through carelessness or any other cause, found to exist prior to the final acceptance of the work, shall be removed immediately and replaced in an acceptable manner.

No work shall be done without lines and grades having been given by the Engineer. Work done contrary to the instructions of the Engineer, work done beyond the lines shown on the plans, or as given, or any extra work done without authority, will be considered as unauthorized and will not be paid for under the provisions of the contract. Work so done may be ordered removed or replaced at no additional cost to the Contracting Agency.

105.12 MAINTENANCE DURING CONSTRUCTION:

The Contractor shall maintain the work during construction and until the project is accepted. This maintenance shall constitute continuous and effective work prosecuted day by day, with adequate equipment and forces to the end so that the roadway or structures are kept in satisfactory conditions at all times.

In the case of a contract for the placing of a course upon a course or subgrade previously constructed, the Contractor shall maintain the previous course or subgrade during all construction operations. All cost of maintenance work during construction and before the project is accepted shall be included in the unit bid price on the various pay items.

105.13 FAILURE TO MAINTAIN ROADWAY OR STRUCTURE:

If the Contractor, at any time, fails to perform maintenance during construction, the Engineer will immediately notify the Contractor of such noncompliance. If the Contractor fails to remedy unsatisfactory maintenance within 24 hours after receipt of such notice, the Engineer may immediately proceed to maintain the project. The entire cost of this maintenance will be deducted from monies due or to become due the Contractor on his contract.

105.14 PARTIAL USE OR OCCUPANCY:

Should an urgent or unforeseen need occur, the Contractor agrees to let the Contracting Agency use or occupy a unit or portion of the project, such as a structure, utility service, or a section of road or pavement, prior to final acceptance.

Prior to such use or occupancy the Contracting Agency will prepare a written agreement with the Contractor and accomplish a partial acceptance inspection. The written agreement will include a revised construction schedule, responsibilities for maintenance of the partial acceptance and continued construction of the original project to final acceptance, payments, insurance and bond requirements.

105.15 ACCEPTANCE:

(A) PARTIAL ACCEPTANCE: If at any time during the prosecution of the project the Contractor substantially completes a unit or portion of the project, such as a structure, utility service, or a section of road or pavement, he may request the Engineer to make final inspection of that work. If the Engineer finds, upon inspection, that the work has been satisfactorily completed in compliance with the contract he may accept the work as being completed and the Contractor may be relieved of further responsibility for that work. Such partial acceptance shall in no way void or alter any terms of the contract.

(B) FINAL ACCEPTANCE: Upon due notice from the Contractor of presumptive completion of the entire project, the Engineer will make an inspection. If all construction provided for and contemplated by the contract is found completed to his satisfaction, that inspection shall constitute the final inspection and the Engineer will make the final acceptance. The Contractor will be notified in writing of this acceptance as of the date of the final inspection.

If, however, the inspection discloses any work, in whole or in part, as being unsatisfactory, the Engineer will give the Contractor the necessary instructions for correction of same, and the Contractor shall immediately comply with and execute such instructions. Upon correction of the work, another inspection will be made which shall constitute the final inspection provided the work has been satisfactorily completed. In such event, the Engineer will make the final acceptance and notify the Contractor in writing of this acceptance as of the date of the final inspection.

End of Section

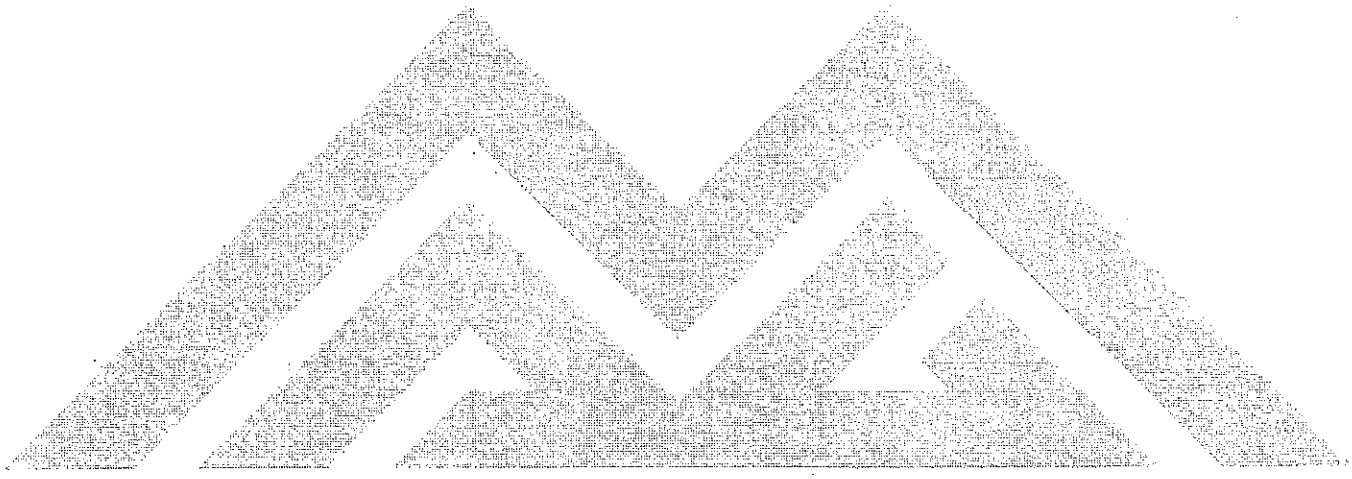

SECTION 106

CONTROL OF MATERIALS

106.1 SOURCE OF MATERIALS AND QUALITY:

All construction materials to be used on the work or incorporated into the work, equipment, plant, tools, appliances or methods to be used on the work shall be subject to the inspection and approval or rejection of the Engineer.

The materials used on the work shall meet all quality requirements of the contract. In order to expedite the inspection and testing of materials, the Contractor shall notify the Engineer of his proposed source of materials prior to delivery. At the option of the Engineer, materials may be approved at the source of supply before delivery is started. If it is found after trial that sources of supply for previously approved materials do not produce specified products the Contractor shall furnish materials from other sources.

Unless otherwise noted, all materials used in the project shall be new and unused. Additionally, any new materials used in this project that are damaged during the construction of the project and prior to final acceptance, as determined by the Engineer, shall be replaced by the Contractor with new material at no additional cost to the Contracting Agency.

106.2 SAMPLES AND TESTS OF MATERIALS:

All materials to be incorporated in the work may be subject to sampling, testing and approval, and samples furnished shall be representative of the materials to be used. The Engineer may select samples, or may require that samples be delivered by the Contractor to a laboratory designated by the Engineer.

The Contracting Agency will pay for the initial or normal test required by the Engineer to guard against unsuitable materials or defective workmanship. Additional tests, required due to failure of the initial or normal test(s), shall be paid for by the Contractor. The Engineer will designate the laboratory which will accomplish the additional test(s).

The procedures and methods used to sample and test materials will be determined by the Engineer. Unless otherwise specified, samples and tests will be made in accordance with either: the Materials Testing Manual of the Contracting Agency; the standard methods of AASHTO or ASTM, which were in effect and published at the time of advertising for bids.

The laboratory responsible for the test shall furnish at least one copy of the test results to the Contracting Agency or his designated representative, to the Contractor, and to the appropriate material supplier.

With respect to certain manufactured materials, the Engineer may permit the use of some materials prior to sampling and testing provided they are delivered with either a certificate of compliance or analysis or both, stating that the materials comply in all respects with the requirements of the specifications. These certificates shall be furnished in triplicate and clearly identify each delivery of materials to the work area. The certificates shall be signed by a person having legal authority to bind the supplier or manufacturer.

106.3 PLANT INSPECTION:

The Engineer may undertake the inspection of materials at the source. In this event, the following conditions shall be met:

(A) The Engineer shall have the cooperation and assistance of the Contractor and the producer with whom he has contracted for materials.

(B) The Engineer shall have full entry at all times to such parts of the plant as may concern the manufacture or production of the materials being furnished.

It is understood that the Contracting Agency reserves the right to retest all materials, prior to their use in the work, upon delivery.

106.4 TRADE NAMES AND SUBSTITUTIONS:

Plans and specifications may contain references to equipment, materials or patented processes by manufacturer, trade name, make or catalog number. Unless the name is followed by words indicating that no substitution is permitted, such references shall be regarded as establishing a standard of quality, finish, appearance, performance or, as indicated, a selection based upon compatibility with existing equipment or materials.

The use of an alternate or substitute item or source may be permitted, subject to the following:

(A) No consideration will be given to a substitution prior to the award of the contract.

(B) Only substitutions submitted by the Contractor will be accepted for review. The substitution shall be submitted in writing to the Engineer.

(C) The submittal shall certify that the substitution will perform the functions and achieve the results called for by the general design, be similar and of equal substance, and be suited to the same use as that specified.

(D) The submittal shall state any required changes in the contract documents to adapt the design to the proposed substitution. This will include all changes required of other contractors/subcontractors affected by the resulting changes.

(E) The submittal shall contain an itemized estimate of all costs and credits that will result directly or indirectly from the acceptance of such substitution, including costs of design, license fees, royalties, testing, Engineer's evaluation, claims of other contractors/subcontractors, etc. Also, the submittal shall include any adjustment in the contract time created by the substitution.

(F) The Contractor, on request of the Engineer, shall submit samples or any additional information the Engineer may deem necessary to evaluate the acceptability of the substitution. The Engineer will evaluate the information provided, perform tests when necessary and make comparisons. The Engineer will then make the final decision as to the acceptability of the proposed substitution. The Contractor will be notified in writing by the Engineer as to whether his substitution has been accepted or rejected.

(G) The submittal, for purposes of review, number of copies, etc., shall follow the procedures as outlined in Section 105.2, except in the case of response time. If the Engineer does not respond in a timely manner, which in turn, impacts the substitution, the Contractor shall continue to perform the work in accordance with the contract and the substitution will be considered rejected. Also, no adjustment in the contract time will be granted for nonacceptance of the substitution.

(H) There will be no additional costs to the Contracting Agency for the substitution. If the substitution yields a net savings in the contract price, the amount of savings shall be divided between the Contracting Agency and the Contractor in a percentage established by the Contracting Agency.

(I) If the substitution is accepted and an adjustment in the contract cost and/or contract time is in order, a change order will be issued to the Contractor for the changes.

106.5 STORAGE OF MATERIALS:

The Contractor shall provide storage facilities and exercise such measures as will insure the preservation of the quality and fitness of all materials and/or equipment to be used in the work. Stored materials and/or equipment, even though approved before storage, may again be inspected prior to their use in the work. Stored items shall be located so as to facilitate their prompt inspection. That portion of the right-of-way and easements not required for public travel may be used for storage purposes, when approved by the Engineer. Any additional storage area as required must be provided by the Contractor. Private property shall not be used for storage purposes without written permission of the owner or lessee. If requested, by the Engineer, copies of such written permission shall be made available.

106.6 HANDLING MATERIALS:

All materials and/or equipment shall be handled in such a manner as to preserve their quality and fitness for the work.

106.7 UNACCEPTABLE MATERIALS:

All materials and/or equipment not conforming to the requirements of the specifications, whether in place or not, may be rejected. Rejected materials and/or equipment shall be removed immediately from the site of work unless otherwise permitted by the Engineer. No rejected material and/or equipment, the defects of which have been subsequently corrected, shall be used until approved in writing by the Engineer.

106.8 FURNISHED MATERIALS:

Materials and/or equipment, furnished by the Contracting Agency, will be delivered or made available to the Contractor as indicated in the special provisions. The cost of handling and placing shall be considered as included in the contract price for the pay item with which they are used.

The Contractor will be held responsible for all materials and/or equipment accepted by him and will make good any shortages, deficiencies and damages which may occur after such acceptance.

End of Section

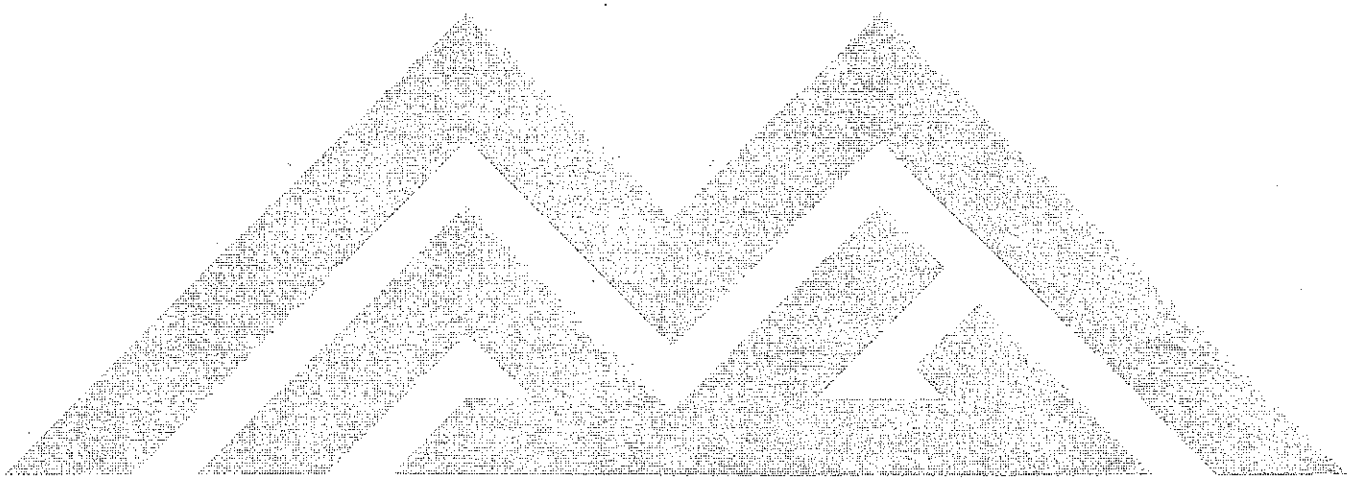

SECTION 107

LEGAL REGULATIONS AND RESPONSIBILITY TO PUBLIC

107.1 LAWS TO BE OBSERVED:

The Contractor shall keep fully informed of all Federal and State laws, County and City ordinances, regulations, codes and all orders and decrees of bodies or tribunals having any jurisdiction or authority, which in any way affect the conduct of the work. He shall at all times observe and comply with all such laws, ordinances, regulations, codes, orders and decrees; and shall protect and indemnify the Contracting Agency and its representatives against any claim or liability arising from or based on the violation of such, whether by himself or his employees.

The attention of the Contractors is directed to the provisions of the following sections, Arizona Revised Statutes.

(A) ARS 23-373. Contracts negotiated between public Contractors and public employers shall contain the following contractual provisions:

In connection with the performance of work under this contract, the Contractor agrees not to discriminate against any employee or applicant for employment because of race, religion, color or national origin. The aforesaid provision shall include, but not be limited to, the following: Employment, upgrading, demotion or transfer, recruitment or recruitment advertising, layoff or termination, rates of pay or other forms of compensation, and selection for training, including apprenticeship. The Contractor agrees to post hereafter in conspicuous places, available for employees and applicants for employment, notices to be provided by the contracting officer setting forth the provision of the nondiscrimination clause.

The Contractor further agrees to insert the foregoing provision in all subcontracts, except subcontracts for standard commercial supplies or raw materials.

(B) When Federal-aid funds are used on a project, the prevailing basic hourly wage rates and fringe benefit payments, as determined by the Secretary of Labor pursuant to the provisions of the Davis-Bacon Act, shall be the minimum wages paid to the described classes of laborers and mechanics employed to perform the contract.

(C) ARS 40-360.22 Excavations; determining location of underground facilities; providing information. This statute requires that no person shall begin excavating before the location and marking are complete or the excavator is notified that marking is unnecessary and requires that upon notification, the owner of the facility shall respond as promptly as practical, but in no event later than two working days. The "Blue Stake Center" (263-1100) was formed to provide a more efficient method of compliance with this statute.

This section is not applicable to an excavation made during an emergency which involves danger to life, health or property if reasonable precautions are taken to protect underground facilities.

(D) ARS-40-360.23. Making excavations in careful, prudent manner: liability for negligence. This statute states that obtaining information as required does not excuse any person making any excavation from doing so in a careful and prudent manner nor shall it excuse such persons from liability for any damage or injury resulting from his negligence.

(E) ARS-40-360.28 Civil penalty; liability. If the owner or operator fails to locate, or incorrectly locates the underground facility, pursuant to this article, the owner or operator becomes liable for resulting damages, costs and expenses to the injured party.

(F) ARS 32-2313. Business license; business name; branch office registration; renewal. No person, partnership, corporation or association shall engage in the business of general pest or weed control without being duly licensed/certified by the Structural Pest Control Board.

107.2 PERMITS:

Permits, bonding and insurance requirements shall be as required by the Contracting Agency's statutes, codes, ordinances or regulations.

The Public Agency, when acting as the Contracting Agency, will attempt to obtain the required permits, but it is the duty of the Contractor to determine that all necessary permits have been obtained. The Contractor shall, at his own expense, obtain all the required permits which have not been furnished.

If the permits not included in the proposal pamphlet materially affect any condition, specification, quantity, etc. contained in the proposal pamphlet, the Contracting Agency shall issue an appropriate change order pursuant to Subsection 109.4.

In all cases, the Contractor or the person supervising the authorized work shall notify the appropriate permit agency so as to insure proper inspection by the agency concerned.

107.3 PATENTED DEVICES, MATERIALS AND PROCESSES:

If the Contractor employees any design, device, material, or process covered by letters of patent or copyright, he shall provide for such use by suitable legal agreement with the patentee or owner. The Contractor and the surety shall indemnify and save harmless the Contracting Agency, any affected third party or political subdivision from any and all claims for infringement by reason of the use of any such patented design, device, material or process, or any trademark or copyright, and shall indemnify the Contracting Agency for any costs, expenses, and damages which it may be obligated to pay by reason of any infringement, at any time during the prosecution or after the completion of the work.

107.4 ARCHAEOLOGICAL REPORTS:

Attention is directed to Sections 41-844 and 41-846 Arizona Revised Statues. In view of the above, it shall be a provision of every contract that when archaeological features are encountered or unearthed in the excavation of material pits or of the roadway prism, or other excavation, the Contractor shall report promptly to the Director of the Arizona State Museum and the Contracting Agency. The Contractor will be allowed extra time as appropriate in accordance with the provisions of Section 108.

107.5 SAFETY, HEALTH AND SANITATION PROVISIONS:

The Contractor shall provide and maintain in a neat, sanitary condition such accommodations for the use of his employees as may be necessary to comply with the requirements and regulations of the Arizona State Department of Health or as specified by the Maricopa County Health Department, Sanitary Code.

The Contractor shall provide all safeguards, safety devices and protective equipment and take any other needed actions, on his own responsibility or as the Engineer may determine, reasonably necessary to protect the life and the health of employees on the job, the safety of the public and to protect property in connection with the performance of the work covered by the contract.

Precaution shall be exercised by the Contractor at all times for the protection of persons (including employees) and property. The Contractor shall comply with the provisions of all applicable laws, pertaining to such protection including all Federal and State occupational safety and health acts, and standards and regulations promulgated thereunder.

107.5.1 Asbestos Materials: If asbestos materials are encountered during any building remodeling/demolition work, the Contractor shall comply fully with the Arizona Administrative Code, A.A.C. R18-2-901 and notify the Engineer. An extension of contract time will be granted for any delay resulting from the asbestos material in accordance with Section 108.

107.5.2 Lead-Containing Paint: Paint and similar surface coating materials that contain lead compounds and in which the lead content exceeds 0.06 percent of the total weight of the non-volatile content of the paint or the weight of the dried paint film is declared a banned hazardous product and will not be used (Consumer Product Safety Act Part 1303 dated 9-1-77).

107.6 PUBLIC CONVENIENCE AND SAFETY:

The Contractor shall at all times so conduct his work as to assure the least possible obstruction to traffic and adjacent residents. The safety, convenience, and the protection of persons and property, of the general public and residents along the street, highway, and areas adjacent to the work area shall be provided for by the Contractor.

107.6.1 Contractor's Marshaling Yard: Contractors shall notify the Engineer when using vacant property to park and service equipment and store material for use on the Contracting Agency construction contracts.

(A) Any use of vacant property adjacent to or near the project for parking or servicing equipment and/or storing of material will require the Contractor to obtain written approval from the property owner.

(B) A copy of the property owner's approval shall be submitted to the Engineer, stating the use of the Marshaling Yard in connection with the project.

(C) The Yard shall be adequately maintained to control dust and mud from leaving the property.

(D) Work in the Marshaling Yard shall be scheduled so as to comply with the Agency Noise Ordinance.

(E) Equipment, materials, etc., shall be located so as to minimize impact on adjacent properties.

(F) The Contractor shall clean up property promptly upon completion of use.

(G) Contractor's notification to the Engineer shall specify in detail how the Contractor proposes to comply with (C) through (F) above.

(H) The Contractor shall obtain a written release from the property owner after completion of use. A copy of the release shall be presented to the Engineer.

107.6.2 The Contractor shall comply with the Agency Code concerning work hours and noise level during construction.

107.7 BARRICADES AND WARNING SIGNS:

The Contractor shall provide, erect, and maintain all necessary barricades, suitable and sufficient lights, danger signals, signs and other traffic control devices, and shall take all necessary precautions for the protection of the work and safety of the public. Roads, partially or fully closed to traffic, shall be protected by effective barricades, and obstructions shall be illuminated during hours of darkness. Suitable warning signs shall be provided to properly control and direct traffic.

The Contractor shall erect warning signs in advance of any place on the project where operations may interfere with the use of the road by traffic, and at all intermediate points where the new work crosses or coincides with an existing road. Such warning signs shall be constructed and erected in accordance with the Traffic Barricade Manual prepared or adopted by the Contacting Agency's Traffic Engineering Department which is hereby made a part of these specifications.

107.8 USE OF EXPLOSIVES:

The use of explosives or blasting agents is controlled by the Uniform Fire Code, which is generally administered by the Fire Department of the Agency. The Contractor shall obtain a special permit from the Agency's Fire Department for the use of explosives. A copy of this permit shall be delivered to the Engineer prior to the use of explosives. If the Agency does not use the Uniform Fire Code or have a department for enforcement of this Code, the Contractor shall use explosives only when authorized in writing by the Engineer. The approval by the Engineer for the use of explosives shall not relieve the Contractor from his responsibilities for proper use and handling of the explosives or for any and all damages resulting from their use.

Explosives shall be transported, stored, handled and used in accordance with the provisions and requirements of all applicable laws, ordinances and regulations. Work shall be done in accordance with recommendations of the AGC Manual of Accident Prevention in Construction, the Institute of Makers of Explosives, and the Occupational Safety and Health Administration Regulations (29 CFR 1926.1(U)). In addition to the applicable regulations, the Contractor shall:

(A) Exercise the utmost care not to endanger life or damage property.

(B) Furnish and erect special signs to warn the public of his blasting operations. They shall be located and maintained so as to be clearly evident to the public during all critical periods of blasting operations.

(C) Notify each public utility company, having structures adjacent to the work, of his intention to use explosives. Such notice shall be given sufficiently in advance to enable the companies to advise the Contractor of any precautions that should be taken to protect their structures from damage.

(D) Make a survey of adjacent properties, before commencing blasting operations, locating on drawings and by photographs all existing cracks and damages to structures. A copy shall be filed with the Engineer, including a report

(E) Blasting shall be accomplished in such a manner that nearby buildings, structures, railways, highways, etc. will be safe from rocks and other projectiles. Adequate blasting mats or other means of protection shall be employed when blasting in congested area or close proximity to any of the above improvements. Steel mats shall not be allowed within 2,000 feet of powerlines.

(F) At the time of firing, the Contractor shall station men along the road at sufficient distance from the blasting operation to flag down any vehicles.

The Contracting Agency reserves the right to order the discontinuance of blasting operations at any time.

107.9 PROTECTION AND RESTORATION OF PROPERTY AND LANDSCAPE:

The Contractor shall be responsible for the preservation of all public and private property and shall protect carefully from disturbance or damage all land monuments and property marks until the Engineer has witnessed or otherwise referenced their location and shall not move them until directed.

The Contractor shall be responsible for all damage or injury to property of any character, during the prosecution of the work, resulting from any act, omission, neglect, or misconduct in his manner or method of executing the work, or at any time due to defective work or materials, and said responsibility will not be released until the project shall have been completed and accepted.

When or where any direct or indirect damage or injury is done to public or private property by or on account of any act, omission, neglect, or misconduct in the execution of the work, or in consequence of the nonexecution thereof by the Contractor, he shall restore, at no cost to the Contracting Agency, such property to a condition similar or equal to that existing before such damage or injury was done, by repairing, rebuilding, or otherwise restoring as may be directed, or he shall make good such damage or injury in an acceptable manner. Such damage will include but not be limited to landscaped areas. The contractor shall regrade the disturbed area as directed and restore the surface material to match existing in type and quality.

When construction is within temporary construction easements, the Contractor shall restore all disturbed areas to a condition equal to or better than the existing improvements. Such restoration will include but not be limited to asphalt, walkways, fences, lights, sprinklers, landscaping, etc. In the case of landscaping, the Contractor may remove and store sod and plant material. If, in the determination of the Engineer, the sod and/or plant material did not survive the transplanting in good condition, the Contractor shall replace the sod and/or plant material to match in type and quality. Also, the Contractor may salvage any sprinkler system materials, lighting materials, etc. In the event that it is not feasible to reinstall the salvaged material, new material shall be installed.

The Contractor shall not dump spoil or waste material on private property without first obtaining from the owner written permission for such dumping. All such dumping shall be in strict conformance with the Grading and Drainage Ordinance of the Contracting Agency.

Access to private property shall be maintained to keep inconvenience to the property owner to a minimum. Prior to any construction in front of driveways the Contractor shall notify the property owner 24 hours in advance. Inconvenience caused by construction across driveways and sidewalks shall be kept to a minimum by restoring the serviceability as soon as possible. If it is necessary to leave open excavation for a long period of time, the Contractor shall provide structurally adequate steel plates to bridge the excavation.

107.10 CONTRACTOR'S RESPONSIBILITY FOR WORK:

The Contractor shall properly guard, protect, and take every precaution necessary against injury or damage to all finished or partially finished work, by the action of the elements or from any other cause until the entire project is completed and accepted by the Engineer. The Contractor shall rebuild, repair, restore, and make good all injuries or damages to any portion of the work before final acceptance at no cost to the Contracting Agency. Partial payment for completed portions of the work shall not release the Contractor from such responsibility.

In case of suspension of the work for any cause whatever, the Contractor shall be responsible for the project and shall take such precautions as may be necessary to prevent damage to the project and shall erect any necessary temporary structures, signs, or other facilities at no cost to the Contracting Agency.

107.11 CONTRACTOR'S RESPONSIBILITY FOR UTILITY PROPERTY AND SERVICES:

At points where the Contractor's operations are adjacent to properties of utility firms or other property, damage to which might result in considerable expense, loss, or inconvenience, work shall not commence until all arrangements necessary for the protection thereof have been made.

The Contractor shall cooperate with the owners of any underground or overhead utilities in their removal and rearrangement operations in order that these operations may progress in a reasonable manner, that duplication of work may be reduced to a minimum, and that services rendered by those parties will not be unnecessarily interrupted.

If any utility service is interrupted as a result of accidental breakage, the Contractor shall promptly notify the proper authority and shall cooperate with the said authority in the restoration of service. No work shall be undertaken around fire hydrants until provisions for continued service have been approved by the local fire authority.

The Contractor shall expose all underground utilities and structures which might interfere with the construction of the project, in order to permit survey location prior to construction.

The Contractor shall assume full responsibility for damages to any underground facility/utility as a result of failing to obtain information as to its location, failing to excavate in a careful, prudent manner or failing to take measures for protection of the facilities/utilities. The Contractor is liable to the owner of the underground facility/utility for the total cost of the repair.

107.12 FURNISHING RIGHT-OF-WAY:

The Contracting Agency will provide right-of-way and easements for all work in advance of construction. Any exceptions will be indicated in the special provisions.

107.13 PERSONAL LIABILITY OF PUBLIC OFFICIALS:

In carrying out any provisions of these specifications, or in exercising any power or authority granted to them by or within the scope of the contact, there shall be no liability upon the Contracting Agency, Engineer, or their authorized representatives, either personally or as officials of the Contracting Agency, it being understood that in all such matters they act solely as agents and representatives of the Contracting Agency.

107.14 NO WAIVER OF LEGAL RIGHTS:

Upon completion of the work, the Contacting Agency will expeditiously make final inspection and notify the Contractor of acceptance. Such final acceptance, however, shall not preclude or estop the Contracting Agency from correcting any measurement, estimate, or certificate made before or after completion of the work, nor shall the Contracting Agency be precluded or estopped from recovering from the Contractor or his surety, or both, such overpayment as it may sustain, or by failure on the part of the Contractor to fulfill his obligations under the contract. A waiver on the part of the Contracting Agency of any breach of any part of the contract shall not be held to be a waiver of any other or subsequent breach.

The Contractor, without prejudice to the terms of the contract and in addition to any specific remedy provided the Contracting Agency in the contract documents, shall be liable to the Contracting Agency for latent defects, fraud or such gross mistakes as may amount to fraud, or as regards the Contracting Agency's rights under any warranty or guaranty or remedy required by law.

End of Section

SECTION 108

COMMENCEMENT, PROSECUTION AND PROGRESS

108.1 NOTICE TO PROCEED:

(A) On Bond Issue and Budget Projects, neither the Contractor nor any Subcontractor shall commence work on a project prior to receipt of the written Notice to from the Contracting Agency. The Contractor shall commence work as soon as practicable after the starting date specified in the Notice to Proceed. All work under the contract shall be completed within the number of calendar days stated in the proposal, plus extensions, beginning with the day following the starting date specified in the Notice to Proceed.

(B) On Improvement District Projects, the Contractor shall commence work within 10 days from the date of execution of the contract with the Contracting Agency. All work under the contract shall be completed within the number of calendar days stated in the proposal, plus any days extended on the contract, beginning with the day following the date of execution of the contract. The time set for completion of the project will be established by the Contracting Agency, in accordance with ARS Section 9-683.

The Contractor shall notify the Field Engineering Inspection Section 24 hours in advance of the time and place where work will begin and the Survey Section 2 working days in advance for staking.

108.2 SUBLETTING OF CONTRACT:

The Contractor shall not sublet, sell, transfer, assign, or otherwise dispose of the contract or contracts, or of his right, title, or interest therein, without written consent of the Contracting Agency.

Subcontracts shall be in accordance with and the Contractor shall be bound by the following provisions:

(A) All subcontracts shall be subject to the approval of the Engineer.

(B) All subcontracts shall be in writing and shall provide that all work to be performed thereunder shall be performed in accordance with the terms of the contract.

(C) Subcontractors shall conform to the regulations governing employment of labor.

(D) The subcontracting of any portion of the work will in no way release the Contractor of his liability under the contract and bonds.

(E) On all contracts for pipeline construction, roadway construction or roadway maintenance, the Contractor shall perform, with his own organization, work amounting to not less than 50 percent of the total contract cost.

On other types of contracts the individual agency shall determine the percentage or waive this requirement.

108.3 CORRESPONDENCE TO THE CONTRACTOR:

A written notice, to the Contractor from the Contracting Agency, shall be considered delivered and the service thereof completed, when said notice is posted, by certified mail, to the said Contractor at his last given address, or delivered in person to the Contractor or his authorized representative on the work.

108.4 CONTRACTOR'S CONSTRUCTION SCHEDULE:

The Contractor, when required, shall furnish the Engineer a construction schedule for his review. The Engineer's review of the Contractor's schedule is for purposes of: 1) the Contracting Agency's staffing the project as may be required; 2) to insure general compliance with the contract documents as it relates to the completion of all work; and 3) to monitor and evaluate the construction status for purposes of approving progress payments. In the event the schedule does not contain sufficient information to meet the above purpose, as determined by the Engineer, the Contractor shall resubmit a new schedule with the additional information requested by the Engineer. The right to determine the sequence of the work is a function vested solely in the Engineer and the construction schedule, when established, shall not be changed without the written consent of the Engineer. The orderly procedure of all work to be performed shall be the full responsibility of the Contractor.

Review of a submitted schedule by the Engineer shall in no way be construed as an affirmation or admission that the schedule is reasonable or workable which responsibilities remain the obligations of the Contractor. When the schedule shows a completion prior to the contract completion date, this extra time between the contract completion date and the scheduled completion date (float), may be used by the Contracting Agency without additional compensation to the Contractor. The Contracting Agency shall not be liable to the Contractor for any damages for delay if the Contractor completes the work prior to expiration of the original Contract completion date or as modified by approved change orders, if any.

108.5 LIMITATION OF OPERATIONS:

The Contractor shall conduct the work at all times in such a manner and sequence that will assure the least interference with traffic and inconvenience to the public. The Engineer may require the Contractor to finish a section on which work is in progress before work is started on any additional sections if the opening of such section is essential to public convenience.

All traffic affected by the construction will be regulated in accordance with the current Traffic Barricade Manual prepared or adopted by the Contracting Agency's Traffic Engineering Department.

Except in emergencies endangering life or property, written permission shall be obtained from the Engineer to perform any work after regular working hours, on weekends, or legal holidays. Prior to the start of such work, the Contractor shall arrange with the Engineer for the continuous or periodical inspection of the work, surveys and tests of materials, when necessary.

If, in the opinion of the Engineer, the Contractor has fallen behind the approved progress schedule, the Contractor shall take such steps as may be required by the Engineer, including but not limited to, increasing the number of personnel, shifts, and/or overtime operations, days of work, and/or amount of construction equipment until such time as the work is back on schedule. He shall also submit for approval no later than the time of submittal of the next request for partial payment, such supplementary schedule or schedules as may be deemed necessary to demonstrate the manner in which the approved rate of progress will be regained, all at no additional cost to the Contracting Agency.

108.6 CHARACTER OF WORKMEN; METHODS AND EQUIPMENT:

The Contractor shall at all times employ sufficient labor and equipment for prosecuting the several classes of work to full completion in the manner and time required by the specifications.

All workmen shall be competent and have sufficient skill, knowledge and experience in their class of work and in the operation of equipment required to perform all work properly and satisfactorily.

Any person employed by the Contractor or any Subcontractor who, in the opinion of the Engineer, does not perform his work in a proper and skillful manner or is intemperate or disorderly shall, at the written request of the Engineer, be removed from the work by the Contractor or Subcontractor employing such person, and shall not be employed again in any portion of the work without the approval of the Engineer. The Contractor or Subcontractor shall keep the Contracting Agency harmless from damages or claims for compensation that may occur in the enforcement of this section.

Should the Contractor or Subcontractor fail to remove such person as required above, or fail to furnish suitable and sufficient personnel for the proper prosecution of the work, the Engineer may suspend the work by written notice until such orders are complied with.

All equipment which is proposed to be used on the work shall be of sufficient size and in such mechanical condition as to meet requirements of the work and to produce a satisfactory quality of work. Equipment used on any portion of the project shall be such that it will not damage property adjacent to the work area.

When the methods and equipment to be used by the Contractor in accomplishing the construction are not prescribed, the Contractor is free to use any methods or equipment that he demonstrates to the satisfaction of the Engineer will accomplish the work in conformity with the requirements of the specifications.

When the specifications state the construction shall be performed by the use of certain methods and equipment, such methods and equipment shall be used unless others are authorized by the Engineer. If the Contractor desires to use a method or type of equipment other than those specified, he may request authority from the Engineer to do so. The request shall be in writing and shall include a full description of the methods and equipment proposed to be used and an explanation of the reasons for desiring to make the change. If approval is given, it will be on the condition that the Contractor will be fully responsible for producing construction work in conformity with the specifications. If, after trial use of the substituted methods or equipment, the Engineer determines that the work produced does not meet the specifications, the Contractor shall discontinue the use of the substitute method or equipment and shall complete the remaining construction with the specified methods and equipment. The Contractor shall remove the deficient work and replace it with work of specified quality, or take such other corrective action as the Engineer may direct. No change will be made in basis of payment for the construction items involved nor in contract time as result of authorizing a change in methods or equipment under these provisions.

108.7 DETERMINATION AND EXTENSION OF CONTRACT TIME:

The number of calendar days allowed for the completion of the work included in the contract will be as stated in the proposal and will be known as the contract time.

When the contract time is on a calendar day basis it shall consist of the number of calendar days specified, including all weekends and legal holidays. All calendar days elapsing between the effective dates of any written notice from the Engineer to suspend work and to resume work following suspensions, not the fault of the Contractor, shall be excluded.

When the contract completion time is a fixed calendar date it shall be the date on which all work on the project shall be completed and meet final inspection.

If the Contractor finds it impossible for reasons beyond his control to complete the work within contract time as specified or as extended, he shall immediately submit a written request to the Engineer* for an extension of time setting forth therein the reasons which he believes will justify the granting of his request. The Contractor's plea that insufficient time was specified is not a valid reason for extension of time. If the Engineer* finds that the work was delayed because of conditions beyond the control and through no fault of the Contractor, he may extend the time for completion in such amount as the conditions justify. The extended time for completion shall then be in full force and effect the same as though it were the original time for completion.

108.8 GUARANTEE AND WARRANTEE PROVISIONS:

The Contractor shall guarantee the work against defective workmanship or materials for a period of 1 year from the date of its final acceptance under the contract, ordinary wear and tear and unusual abuse or neglect excepted.

Any omission on the part of the Engineer to condemn defective work or materials at the time of construction shall not be deemed an acceptance, and the Contractor will be required to correct defective work or materials at any time before final acceptance and within 1 year thereafter.

Should any defects develop within 1 year from the date of final acceptance due to faults in workmanship or materials the Contractor shall, within 14 calendar days of receipt of written notice from the Contracting Agency, begin making the necessary repairs to the satisfaction of the Engineer. Such work shall include the repair or replacement of other work or materials damaged or affected by making the above repairs or corrective work, all at no additional cost to the Contracting Agency.

If defects develop which are determined by the Engineer to be an emergency, the Engineer shall notify the Contractor, via the most expeditious means, regarding the nature and condition of the defects. In turn, the Contractor shall immediately dispatch necessary forces to correct the defect or the emergency condition. If the Contractor, in his initial action, resolves the emergency condition but not the defect, a letter as discussed above will follow and normal procedures for corrections will be employed. If immediate or appropriate action, satisfactory to the Engineer, is not taken by the Contractor, of if the Contractor cannot be contacted, the Engineer will deploy necessary forces to correct and/or secure the deficiency. Costs of the Engineer's action shall

---

*For Improvement District Project: The words "Superintendent of Streets" will be substituted for the word "Engineer." Any extension of contract time will be determined by the Superintendent of Streets with the consent of the governing body.

be paid by the Contractor and/or his bonding agency. Should it later be determined that the defects requiring such emergency action are not the responsibility of the Contractor, the Contractor will be paid for all costs incurred as a result of these demands in accordance with Subsection 109.5. Such action by the Engineer will not relieve the Contractor of the guarantees required by this section or elsewhere in the Contract Documents.

In case of work, materials, or equipment for which written warranties are required by the special provisions, the Contractor shall provide or secure from the appropriate Subcontractor or supplier such warranties addressed to and in favor of the Contracting Agency and deliver same to the Engineer prior to final acceptance of the work. Delivery of such warranties shall not relieve the Contractor from any obligation assumed under any other provisions of the contract.

The warrantees and guarantees provided in this subsection of the contract documents shall be in addition to and not in limitation of any other warrantees, guarantees or remedies required by law.

108.9 FAILURE TO COMPLETE ON TIME:

For each and every calendar day that work shall remain incompleted after the time specified for the completion of the work in the proposal, or as adjusted by the Engineer, the sum per calendar day shown in table 108-1, unless otherwise specified in the proposal form, may be deducted from monies due to or to become due to the Contractor, not as a forfeit or penalty but as liquidated damages. This sum is fixed and agreed upon between the parties because the actual loss to the Contracting Agency and to the public caused by delay in completion will be impractical and extremely difficult to ascertain and determine.

Permitting the Contractor to continue and finish the work or any part of it after the time fixed for its completion, or after the date to which the time fixed for its completion may have been extended, will in no way operate as a waiver on the part of the Contracting Agency of any of its rights under the contract.

TABLE 108-1

LIQUIDATED DAMAGES

Original Contract Amount		Daily Charges
From More Than	To and Including	Calendar Day or Fixed Date
$ 0	$ 25,000	$ 210
25,000	50,000	250
50,000	100,000	280
100,000	500,000	430
500,000	1,000,000	570
1,000,000	2,000,000	710
2,000,000	5,000,000	1,070
5,000,000	10,000,000	1,420
10,000,000	—	1,780

108.10 FORFEITURE AND DEFAULT OF CONTRACT:

It is further agreed to by the Contractor that if he:

(A) Fails to begin the work under the contract within a reasonable time, or

(B) Fails to perform the work with sufficient workmen and equipment or with sufficient materials to assure the prompt completion of said work, or

(C) Performs the work unsuitably or neglects or refuses to remove materials or to perform anew such work as may be rejected as unacceptable and unsuitable, or

(D) Discontinues the prosecution of the work, or

(E) Fails to resume work which has been discontinued within a reasonable time after notice to do so, or

(F) At any time colluded with any party or parties, or

(G) Allows any final judgment to stand against him unsatisfied for a period of 14 calendar days, or

(H) For any cause whatsoever, fails to carry on the work in an acceptable manner, the Engineer will give notice in writing to the Contractor and his surety of such delay, neglect, or default, and advise them that the work must be resumed immediately.

If the Contractor or surety, within a period of 14 calendar days after such notice, has not proceeded in accordance therewith, then the Contracting Agency will, upon written notification from the Engineer of the fact of such delay, neglect or default and the Contractor's failure to comply with such notice, have full power and authority without violating the contract, to take the prosecution of the work out of the hands of the Contractor. The Contracting Agency may appropriate or use any or all materials and equipment on the ground as may be suitable and acceptable and may enter into an agreement for the completion of said contract according to the terms and provisions thereof, or use such other methods as in the opinion of the Engineer will be required for the completion of said contract in an acceptable manner.

All costs and charges incurred by the Contracting Agency, together with the cost of completing the work under contract, will be deducted from any monies due or which may become due said Contractor. If such expense exceeds the sum which would have been payable under the contract, then the Contractor and the surety shall be liable and shall pay to the Contracting Agency the amount of such excess.

*108.11 TERMINATION OF CONTRACT

The Contracting Agency may terminate the contract or a portion thereof if conditions encountered during the progress of the work make it impossible or impracticable to proceed with the work or a local or national emergency exists.

When contracts, or any portion thereof, are terminated before completion of all work in the contract, adjustments in the amount bid for the pay items will be made on the actual quantity of work performed and accepted, or as mutually agreed for pay items of work partially completed or not started. No claim for loss of anticipated profits will be considered.

Termination of the contract or any portion thereof shall not relieve the Contractor of his responsibilities for the completed work nor the surety of its obligation for and concerning any just claims arising out of the work performed.

End of Section

*Not applicable to Improvement District Projects.

SECTION 109

MEASUREMENTS AND PAYMENTS

109.1 MEASUREMENT OF QUANTITIES:

All work completed under the contract will be measured by the Engineer according to United States standard measures. The methods of measurement and computation to be used in determination of quantities of materials furnished and of work performed under the contract will be those methods generally recognized as conforming to good engineering practice.
A station, when used as a definition or term of measurement, will be 100 linear feet.

Unless otherwise specified, longitudinal measurements will be made along the grade line.

Unless otherwise specified, transverse measurements for area computations will be the neat dimensions shown on the plans or ordered in writing by the Engineer.

The term ton will mean the short ton consisting of 2,000 pounds avoirdupois.

Unless otherwise specified, structures will be measured according to neat lines shown on the plans or as altered to fit field conditions.

In computing volumes of excavations or fill, the average end area method or other acceptable methods as determined by the Engineer will be used.

Volumes will be computed at 60°F, using ASTM D-1250 for Asphalt or ASTM D-633 for Tars.

Lumber will be measured by the thousand board foot measure actually used in the work. Measurement will be based on nominal widths and thicknesses and the extreme length of each piece.

The term lump sum, when used as a pay item, will mean complete payment for the work described.

Sundry items which have a basis for measurement and payment herein and which are incidental to or required in the construction of the work but are not included as items in the bid schedule shall be considered an integral part of the contract, and all labor, materials, etc. required for such items shall be furnished by the Contractor and the cost of same included in the unit price bid.

109.2 SCOPE OF PAYMENT:

Measurement and payment for pay items in the proposal will be as indicated in the applicable standard specification or in the special provisions.

When payment is specified to be made on the basis of weight, the weighing shall be done on certified platform scales sealed by the State Inspector or the City Sealer of Weights and Measures as defined by ARS Sections 44-2112 and 44-2116. The Contractor shall furnish the Engineer with duplicate Weighmaster's Certificates showing the actual net weights together with the information required by ARS Section 44-2142. The Contracting Agency will accept the certificates as evidence of the weight delivered.

Payment for the various items in the proposal will be made at the unit price bid in the proposal, and shall be compensation in full for furnishing all labor, materials, equipment and appurtenances necessary to complete the work in a satisfactory manner as shown on the plans and as required in the specifications, with all connections, testing, and related work completed. Each item, fixture, piece of equipment, etc., shall be complete with all necessary connections and appurtenances, for the satisfactory use and operation of said item. No additional payment will be made for work related to any item unless specifically called for in the proposal. This compensation shall also cover all risk, loss, damage or expense of whatever character arising out of the nature of the work or the prosecution thereof, subject to the provisions of Section 107.

109.3 ASSIGNMENT OF PAYMENTS:

The Contractor shall not assign payments of a contract or any portion thereof without approval of surety and written consent of the Contracting Agency.

Claims for monies due or to become due the Contractor may be assigned to a bank, trust company, or other financing institution, and may thereafter be further assigned and reassigned to any such institution. Any such assignment or reassignment may be made to one party as agent or trustee for two or more parties participating in such financing. Any assignment of money shall be subject to all proper setoffs and withholdings in favor of the Contracting Agency and to all deductions provided for in these specifications.

109.4 COMPENSATION FOR ALTERATION OF WORK:

***109.4.1 By The Contracting Agency:**

(A) For a decrease greater than 20 percent in either the total cost of the contract or the total cost of a major item and when a reasonable cost analysis supports an increase in the pro rata share of fixed cost chargeable to this item in total, an increase adjustment in the monies due the Contractor may be made. This adjusted compensation will not exceed 80 percent of the original lump sum contract amount or, if for a unit price item, the adjustment will not exceed 80 percent of the original extended until bid price. This does not apply to items labeled as contingent bid item in the bid proposal.

(B) For an increase greater than 20 percent, any adjustment made will only apply to that cost in excess of 120 percent of the original bidding schedule. If either party presents a reasonable cost analysis that shows a change in the pro rata share of fixed costs chargeable to this item in total, an increase or decrease adjustment will be made. This increase or decrease adjustment will be made on such basis as is necessary to cover a reasonable estimate of cost, plus an allowance, not to exceed 15 percent, for overhead and profit. If the parties are unable to reach an agreement, the Engineer has the authority to order the excess work done on an actual cost basis as specified in Subsection 109.5.

(C) For either an increase or decrease in cost, no claim shall be made by the Contractor for any loss of anticipated profits.

***109.4.2 Due to Physical Conditions:**

(A) If the Engineer, after his investigation of the site conditions, agrees that they materially differ from those indicated in the contract and would cause an increase in the Contractor's bid cost of accomplishing the work, new unit bid prices or a lump sum cost (for the additional work only) may be negotiated. If the parties are unable to reach an agreement on price, the Engineer has the authority to order this additional work accomplished on an actual cost basis as specified in Subsection 109.5.

(B) If the Engineer, after his investigation of the site conditions, finds that these conditions do not materially differ from those indicated in the contract, he has the authority to order the work to be accomplished at the original bid price(s).

***109.4.3 Due to Extra Work:** If the Contractor can present valid, factual evidence, satisfactory to the Engineer, that the work in question is an item not provided for in the contract as awarded then a unit bid price or lump sum cost, for this item only, may be negotiated. If the parties are unable to reach an agreement on price or cost, the Engineer has the authority to order the extra work accomplished on an actual cost basis as specified in Subsection 109.5.

109.4.4 Made at the Contractor's Request: Any alterations, if approved, will be a reduction in cost or at no additional cost to the Contracting Agency.

109.4.5 Due to Failure of Contractor to Properly Maintain the Project:

(A) For any suspension of work during normal working hours due to failure of the Contractor to properly maintain the project, there will be no additional compensation or time allowed.

(B) If the Engineer provides the Contractor with a written order to provide adequate maintenance of traffic, adequate cleanup, adequate dust control or to correct deficiencies resulting from abnormal weather conditions and the Contractor fails to comply in the time frame specified, the Contracting Agency may have the work accomplished by other sources.

---

*Not applicable to Improvement District Projects.

The Contracting Agency will deduct the cost of accomplishing the work from monies due or to become due to the Contractor. Computation of the cost will be in accordance with Subsection 109.5.4.2.

109.4.6 Allowable Mark-Ups:

Only the allowable mark-ups as defined in Subsection 109.5 shall be allowed. Additional compensation for other items shall not be considered or allowed.

***109.5 ACTUAL COST WORK:**

The compensation for actual cost work performed by the Contractor (Subcontractor) shall be determined by the Engineer in the following manner.

109.5.1 Equipment: For all equipment, the use of which has been authorized by the Engineer, except for small tools and manual equipment, the Contractor will be paid in accordance with the latest Schedule of Equipment Rates used by the Arizona Department of Transportation.

109.5.2 Material: For all material, accepted by the Engineer and used in the work, the Contractor will be paid the actual cost of such material including transportation cost, to which total cost will be added a sum equal to 15 percent thereof.

109.5.3 Labor: For all labor and for the foreman, when he is in direct charge of the operation, the Contractor will be paid:

(A) The actual wages paid plus the current percentage thereof as determined by the Arizona Department of Transportation which is deemed to cover the Contractor's cost incurred as a result of payment imposed by State or Federal Law and payments that are made to, or on behalf of, the workman other than the actual wage. Actual wage is defined as the required current hourly rate paid to the labor classification concerned and does not include any fringe benefits or dislocation allowances. If the Contractor is not required to pay fringe benefits equivalent to the Current rates published in the Federal Register, an equitable deduction will be made from the current percentage established by the Arizona Department of Transportation.

(B) For the first $50,000 of labor cost computed under paragraph (A) above, the Contractor will be paid an amount equal to (15) fifteen percent for overhead and profit.

(C) For all labor cost computed under paragraph (A) above, in excess of $50,000 but not exceeding $100,000, the Contractor will be paid an amount equal to (12) twelve percent for overhead and profit.

(D) For any labor cost computed under paragraph (A) above in excess of $100,000 the Contractor will be paid an amount equal to (10) ten percent for overhead and profit.

109.5.4 Work Performed by Subcontractors or Other Sources:

109.5.4.1 Work Performed by Subcontractors: If it is determined by the Engineer that portions of the Actual Cost Work to be performed requires specialized labor or equipment not normally used by the Contractor and such work is then authorized to be performed by a subcontractor(s), the subcontractor(s) will be paid by the Contractor in accordance with the actual cost work procedures outlined herein. The Contractor will be paid by the Contracting Agency the full amount of the subcontract plus the following percentages for administration and supervision.

(A) For the first $10,000 accumulated total of all change order work performed by subcontractors (less mark-up for overhead and profit), the Contractor will be paid an amount equal to 10 percent of the accumulated total for administration and supervision. If the accumulated total is $3,000 or less, the Contractor will be paid $300 for administration and supervision.

(B) For all change order work in excess of $10,000 accumulated total performed by subcontractors (less mark-up for overhead and profit), the Contractor will be paid an amount equal to 5 percent of the accumulated total for administration and supervision.

---

*Not applicable to Improvement District Projects.

109.5.4.2 Work performed by Other Sources: If the Contracting Agency has work performed by other sources, in accordance with Subsection 109.4.5 (B), the Contracting Agency will deduct, from monies due or to become due to the Contractor, the full amount of the cost of accomplishing the work by other sources plus the following percentages for administration and supervision:

(A) For the first $10,000 accumulated total of work performed by other sources, the Contracting Agency will deduct an amount equal to 10 percent of the accumulated total for administration and supervision. If the accumulated total is $3,000 or less, the Contracting Agency will deduct $300 for administration and supervision.

(B) For all work in excess of $10,000 accumulated total performed by other sources, the Contracting Agency will deduct an amount equal to 5 percent of the accumulated total for administration and supervision.

109.5.5 Documentation:

(A) Except in emergency situations, the Contracting Agency will not be liable for any Actual Cost Work performed by the Contractor prior to written authorization by the Engineer or prior to full execution of a written agreement by all parties concerned.

(B) Payment for work performed on an actual cost basis will not be made until the Contractor has furnished the Engineer, on forms agreed to by the Contracting Agency, duplicate itemized statements of such work, including subcontractor(s) costs, detailed as follows:

1. Name, classification, date, daily hours, total hours, rate and extension for each laborer and foreman.

2. Designation, dates, daily hours, total hours, rental rates and extension for each unit of equipment, and machinery.

3. Quantities of material, prices, extension and transportation cost on a daily basis. These charges shall be substantiated by vendor invoices.

(C) The Engineer will compare his records with the statement furnished by the Contractor, resolving any differences and making the required adjustments. This statement when agreed upon and signed by both parties, shall be the basis of payment for the work performed.

109.5.6 Bonds and Insurance: The Contractor shall be paid for the actual cost plus (10%) ten percent for Administrative cost when the Contractor can provide evidence of payment for premiums on required payment and performance bonds, premiums on railroad and/or airport extended liability insurance, and premiums for property damage and/or public liability insurance. No duplication of payment for Contractor's costs included under Subsection 109.5.3(A) will be allowed.

109.5.7 Authority of Engineer: The Engineer is in charge of Actual Cost Work and has the authority to direct which labor and equipment will be used, to suspend operations, and to refuse to pay for any labor or equipment which he feels is not doing productive work.

109.6 PAYMENT FOR IMPROVEMENT DISTRICT PROJECTS:

Payment to the Contractor shall be made in accordance with ARS Sections 9-621 to 9-710, both inclusive.

As soon as the Contractor has fulfilled his contract, the Superintendent of Streets shall estimate the benefits arising from the work and make assessments to cover the work performed and specified in the contract, including incidental expenses in accordance with ARS Section 9-686.

The Contractor agrees to accept payment in the form of Assessments with attached Warrants and/or Improvement Bonds at the rate of interest declared in the resolution of intention prepared by the Contracting Agency.

*109.7 PAYMENT FOR BOND ISSUE AND BUDGET PROJECTS:

(A) Partial Payments: The Contracting Agency will make a partial payment to the Contractor on the basis of an estimate prepared by the Contractor or Engineer for work completed through the last day of the preceding calendar month. Payment will be within 14 calendar days after the estimate has been certified and approved by the Engineer and received by the owner.

The Contracting Agency will retain 10 percent of all estimates as a guarantee for complete performance of the contract in accordance with ARS Section 34-221, unless the Contractor elects to deposit securities in accordance with ARS Section 34-221, Paragraph 5.

When the Contractor is fifty percent completed, one-half of the amount retained shall be paid to the Contractor provided he is making satisfactory progress on the contract and there is no specific cause or claim requiring a greater amount to be retained. After the contract is fifty percent completed, no more than five percent of the amount of any subsequent progress payments made under the contract will be retained providing the Contractor is making satisfactory progress on the project. Except that, if at any time the owner determines satisfactory progress is not being made, ten percent retention shall be reinstated for all progress payments made under the contract subsequent to the determination.

Any material or equipment which will become an integral part of the completed project will be considered for partial payment in the Contractor's monthly progress payments. The intent of making partial payments is to provide the Contractor payment for direct material or equipment purchased. The purpose is to minimize the effect of escalating costs by procuring key materials. It is not the intent to pay for all materials but only those meeting the following conditions.

(1) A total value of all items requested for payment must be greater than $20,000. No payment will be processed until the material or equipment has been observed, reviewed or verified by the Contracting Agent representative. Only the material or equipment meeting the requirements of the plans and specifications will be paid. Payment for material or equipment does not constitute final acceptance.

(2) Materials or equipment must be stored or stockpiled either on site, in a warehouse, or secured storage area. The Contractor assumes all responsibility for protection of these materials or equipment and shall insure them to cover loss or damage to same without additional liability or added costs to the Agency for providing this security, insurance, and storage.

(3) The Contractor will provide access to the storage area or warehouse upon request of the Contracting Agent's representative for the purpose of verifying the inventory of items paid for under this section. None of the materials or equipment paid for under this section will be removed from the storage site until incorporated into the work of the project. The storage site shall be within the general geographical area of the project.

(4) The Contractor shall provide a paid invoice and/or lien waiver for items paid for under this section. The Agency will not pay more than the invoice price for the item or items, less retention.

(5) The Engineer may exclude individual payment requests which in the Engineer's judgement do not warrant storage and prepayment under the intent of this section.

(B) Final Payment: When the project has been accepted as provided in Section 105, and within 30 calendar days after final inspection of the work completed under the contract, the Engineer will render to the Contracting Agency and the Contractor, a final estimate which will show the amount of work performed and accepted under the contract. All prior estimates and partial payments will be subject to correction in the final estimate for payment.

Within sixty (60) calendar days after final acceptance, the Contracting Agency will pay the Contractor all amounts due him under the contract, except that before final payment will be made, the Contractor shall satisfy the Contracting Agency by affidavit that all bills for labor and materials incorporated in the work have been paid. The Contractor's Affidavit may be obtained from the Engineering Office of the Contracting Agency.

---

*Not applicable to Improvement District Projects.

If payment will be longer than 60 days after final completion and acceptance, the owner will provide the Contractor specific written findings for reasons justifying the delay in payment.

The acceptance of the project and the making of the final payment shall not constitute a waiver by the Contracting Agency/Owner of any claims arising from faulty or defective work appearing after the completion or from failure of the Contractor to comply with the requirements of the contract documents.

109.8 PAYMENT FOR DELAY:

The procedures contained in this Subsection shall not be construed to void any provision of the contract which require notice of delays, provides for negotiation of other procedures for settlement or provide for liquidated damages.

109.8.1 Failure to Locate or Incorrect Location of Utilities: ARS 40-360 states "that if the owner or operator fails to locate or incorrectly locates the underground facility, pursuant to this article, the owner or operator becomes liable for resulting damages, costs and expense to the injured party." The Contracting Agency will deny any claims for damages or delays if another owner or operator is at fault.

109.8.2 Contracting Agency Delays: ARS 34-221 states "A contract for the procurement of construction shall include a provision which provides for negotiations between the Agent and the Contractor for the recovery of damages related to expenses incurred by the Contractor for a delay for which the Agent is responsible, which is unreasonable under the circumstances and which was not within the contemplation of the parties to the contract."

In this case, if the Contractor sustains damages which could not have been avoided by the judicious handling of forces, equipment and plant or by reasonable revision in the Contractor's schedule of operation, the compensation for such damages will be negotiated. The Contractor shall notify the Engineer of the condition in writing by the next work day. Failure to notify the Engineer within this time may be just cause to reject any claims for such damages.

Compensation for such damages will be negotiated as follows:

(A) The Engineer shall be satisfied that the Contractor has made every reasonable effort to prosecute the work despite any delays encountered or revisions in the Contractor's scheduling of work.

(B) The Compensation paid to the Contractor shall be in accordance with Section 109.

109.8.3 Extension of Contract Time: For any such delays, the contract time will be adjusted in accordance with Subsection 108.7.

TABLE 109-1

DOLLAR VALUE OF MAJOR ITEM

Original Contract Amount	Dollar Value of Major Item
$0.00 to $1,000,000.00	$50,000 or 10% of original contract amount, whichever is less
$1,000,000.00 to $5,000,000.00	5.0% of original contract amount
$5,000,000.00 or greater	$250,000.00 or 2.5% of original contract amount, whichever is greater

End of Section

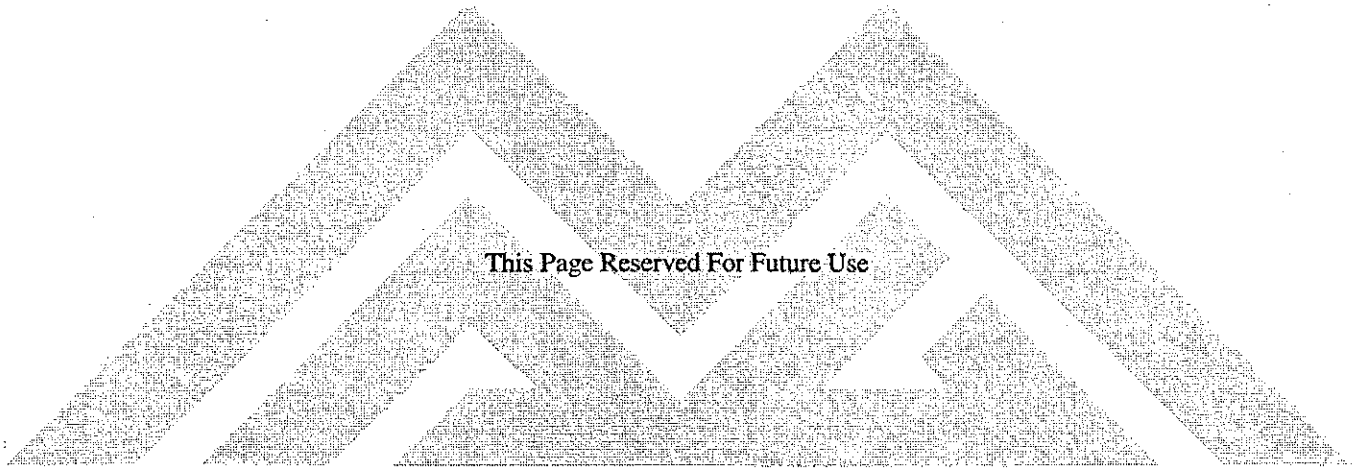

This Page Reserved For Future Use

SECTION 110

NOTIFICATION OF CHANGED CONDITIONS AND DISPUTE RESOLUTION

110.1 GENERAL:

When changes are initiated by the Contracting Agency, or as a result of decisions rendered by the Agency, inaction of the Agency or changed conditions unknown to all parties at the time of bid, the Contractor may request an adjustment to the contract amount and/or contract time. This section does not preclude the use of legal remedies in the event of claims or litigation brought by third parties. The procedure for this adjustment is a two step process, 1) Initial Notification and Dispute Resolution and 2) Administrative Process for Dispute Resolution, as discussed below:

110.2 INITIAL NOTIFICATION AND DISPUTE RESOLUTION:

110.2.1 Notification: As required by these Specifications or any time the Contractor believes that the action or decision of the Contracting Agency, lack of action by the Contracting Agency, or for some other reason will result in or necessitate the revision of the contract, the Engineer must be notified immediately. If within two working days the identified issue has not been resolved between the Contracting Agency and the Contractor, the Contractor shall provide a written notice. At a minimum, the written notice shall provide a description of the nature of the issue, the time and date the problem was discovered, and if appropriate, the location of the issue. After initial written notice has been provided, the Engineer will proceed in accordance with Subsection 104.2. In addition to proceeding in accordance with Subsection 104.2, the Contracting Agency and the Contractor must make every effort to resolve the issue identified in the initial notice. Only if the issue cannot be quickly resolved will it be necessary to proceed to the next step in this subsection.

110.2.2 Dispute Resolution: Once the above process has been exhausted or within seven calendar days of the date of the initial written notice, whichever is sooner, the following steps will be taken:

(A) The Contractor shall provide in writing the following information to the Engineer. If known, a cost analysis may be included with the information.

(1) The date of occurrence and the nature and circumstances of the issue for which initial notice was given.
(2) Name, title, and activity of each Contracting Agency or all other persons knowledgeable of the issue.
(3) Identity of any documents and the substance of any oral communication related to the issue.
(4) Basis for an assertion that the work required is a change from the original contract work or schedule.
(5) Identity of particular elements of contract performance for which a change in compensation and/or time may be sought, including:
    (a) Pay item(s) that have been or may be affected by the issue and any adjustments to unit price(s) that are required;
    (b) Labor and/or materials that will be added, deleted or wasted by the problem and what equipment will be idled or required;
    (c) Delay and disruption in the manner and sequence of performance that has been or will be caused;
    (d) Adjustments to delivery schedule(s), staging, and contract time due to the dispute and
    (e) Estimate of the time within which the Contracting Agency must respond to the notice to minimize cost, delay, or disruption of issue.
(6) Any other items or information germane to the dispute.
(7) The Contractor's written certification, under oath, attesting to the following:
    (a) The request is made in good faith.
    (b) Supportive data is accurate and complete to the Contractor's best knowledge and belief.
    (c) When provided, the amount requested accurately reflects the Contractor's actual cost incurred.

In complying with this request, the Contractor shall use the Contracting Agency's certification form.

(B) Within ten calendar days after the Contractor's submission in accordance with the above paragraph, the Engineer will respond in writing to the Contractor to:

(1) Confirm that a supplemental agreement is necessary and, when necessary, give appropriate direction for further performance, or
(2) Deny that the contract has been revised and, when necessary, direct the Contractor to proceed with the contract work, or

(3) Advise the Contractor that adequate information has not been submitted to decide whether (1) or (2) applies, and indicate the needed information and date it is to be received by the Engineer for further review. The Contracting Agency will respond to such additional information within ten calendar days of receipt from the Contractor.

110.2.3 Conditions: The failure of the Contractor to comply with the requirements of this subsection constitutes a waiver of entitlement to additional compensation or a time extension.

110.3 ADMINISTRATIVE PROCESS FOR DISPUTE RESOLUTION:

110.3.1 General: If the Contractor rejects the decision of the Engineer in Subsection 110.2.2 (B) above, the Contractor may begin the Administration Process to resolve the dispute.

The notice provision set forth in Subsection 110.2 is a contractual obligation assumed by the Contractor in executing the contract. It is understood that the Contractor will be forever barred from recovering against the Contracting Agency if the Contractor fails to give notice of any act or failure to act, by the Engineer, or the happening of any event, thing, or occurrence, in accordance with Subsection 104.2 Alteration of Work.

The administrative process for the resolution of disputes is sequential in nature and is composed of the following levels:

Level I. (Representative reviewed by: *e.g. Construction Engineer*)
Level II. (Representative reviewed by: *e.g. Assistant County/City Engineer*)
Level III. (Representative reviewed by: *e.g. County/City Engineer*)

Note: The above stated titles may vary depending on the Contracting Agency's organization.

These three levels of review; the specific titles, the financial authority of each; and the names of people assigned to each level shall be provided at the preconstruction conference. The equivalent information regarding the Contractor's organization shall also be provided at the preconstruction conference.

Except as provided elsewhere herein, no dispute will be accorded a particular level of review unless the dispute has been reviewed at the preceding level and the Contractor rejects the decision in writing within the time period specified, or both parties agree that the decision for compensation is above that levels authority.

Unless specifically requested otherwise by the Contracting Agency, submission of additional information by the Contractor or Engineer, at any level of the review process shall cause the process to revert to Level I.

110.3.2 Required Information: At a minimum, the information described in Subsection 110.2 must accompany each dispute. If the following applies, it shall also be provided in addition to the information required by Subsection 110.2.

(A) If additional compensation is sought, the Contractor shall submit the exact amount sought as required by Subsection 110.2.2 (A) (5) broken down into the following categories:

(1) Direct Labor
(2) Direct Materials
(3) Equipment
(4) Job Overhead
(5) General and Administrative Overhead
(6) Subcontractor's Work (broken down as 1, 2, 3 and 4 above)
(7) Other categories as specified by the Contractor.

(B) If additional time is sought, the Contractor shall provide a comprehensive time impact analysis showing the delay(s) and how they affect the critical path. The time impact analysis must include both the original and as-built critical path schedules and must be supported by documentation such as delivery schedules, invoices, correspondence, memoranda of telephone calls, payroll data, daily work schedules, etc. NOTE: The path of the longest duration of continuous and dependent work activities through the schedule network is identified as the Critical Path and is the minimum amount of time required to build the project as depicted by the schedule.

(C) The Contractor shall also notify the Contracting Agency's Level I Representative in writing that all documentation in support of the dispute has been provided and that the administrative review process should begin. No formal action will be taken by the Level I Representative until this written notification is received. The documentation provided to the Level I Representative shall serve as the basis for evaluating the Contractor's position regarding the dispute throughout the administrative process.

110.3.3 Process: The Contracting Agency's Level I Representative will render a written decision regarding the matter in dispute within two working days of receipt of the Contractor's notification that the dispute resolution process should begin.

The Contractor shall, upon receipt of the decision by the Level I Representative, either accept or reject the decision in writing. If the Contractor does not reject the Level I Representative's decision within two working days of its receipt, the Contractor will be deemed to have accepted the decision, the dispute will be considered withdrawn from the administrative process, and there will be no further remedy.

If the Contractor rejects the decision of the Level I Representative, the dispute will be forwarded by the Level I Representative to the Level II Representative. The Level II Representative will, within seven working days of receipt of the dispute information from the Level I Representative, schedule and hold a meeting to review the dispute with the Contractor. This time limit may be extended by mutual agreement of the parties. The Level II Representative will, within seven working days of the meeting, issue a written decision, with justification, regarding the dispute.

The Contractor shall, within seven working days of receipt of the decision, either accept or reject it in writing. If the Contractor does not reject the Level II decision within seven working days, the Contractor will be deemed to have accepted the decision and the dispute will be considered withdrawn from the administrative process and there will be no further remedy.

If the Contractor rejects the decision of the Level II Representative, the Level II Representative will forward the dispute to the Level III Representative. The Level III Representative will, within fourteen working days of receipt of the dispute information from the Level II Representative, schedule and hold a meeting with the Contractor. This time limit may be extended by mutual agreement of the parties. The Level III Representative will, issue a written decision within fourteen working days of the meeting, with justification, regarding the dispute.

The Contractor shall, within fourteen working days of the receipt of the decision of the Level III Representative, either accept or reject it in writing. If the Contractor does not reject the Level III Representative's decision within fourteen working days, the Contractor will be deemed to have accepted the decision, the dispute will be considered withdrawn from the administrative process, and there will be no further remedy.

If the Contractor rejects the decision of the Level III Representative, there will be no further administrative review of the dispute. The resolution will then proceed as follows:

A) Mediation: Prior to filing for arbitration or litigation, the Contractor may request non-binding mediation by filing a request for mediation in writing with the Engineer. If agreeable, the Engineer will then arrange for a mutually agreeable mediator. Such request for mediation shall be made within thirty calendar days from the date of the Level III Representative's decision as provided for in this subsection.

In connection with the mediation, each party shall bear its own costs, attorney's fees, and expert fees. Any fees and expenses assessed by the mediator shall be borne equally by the parties.

B) Dispute Review Board/Arbitration: The decision of the Level III Representative in relation to the claim shall be final unless the dispute review board or arbitration is chosen as follows:

(1) Where the amount in controversy is less than or equal to the amount authorized in Subsection 110.3.4, the sole remedy shall be the Dispute Review Board as prescribed in Subsection 110.5 unless both parties mutually agree to utilize arbitration as prescribed in Subsection 110.4.

(2) Where the amount in controversy is more than authorized in Subsection 110.3.4, the Contractor reserves the right to initiate litigation pursuant to Section 12-821 et seq. of the Arizona Revised Statutes, or if mutually agreed upon, the parties may choose to resolve the controversy utilizing either the Dispute Review Board as prescribed in Subsection 110.5 or Arbitration as prescribed in Subsection 110.4.

SECTION 110

110.3.4 Amount of Dispute: For the purposes of this subsection, the amount in controversy may not exceed $200,000.00. A claim for adjustment in compensation shall mean an aggregate of operative facts giving rise to the rights of the party for which it is seeking to enforce. That is to say, a claim under this subsection is defined as the event, transaction or set of facts that give rise to a claim for compensation, costs, expenses or damages.

In making a determination whether the amount in controversy is $200,000.00 or less, the parties shall not consider, quantify or take into account any requested extensions of contract time, or the release or remission of liquidated damages assessed or accrued prior to the dispute in question, under Subsection 108.7 and 108.9 of the Specifications.

Any party having a claim, adjustment or dispute for an amount in excess of $200,000.00 may waive or abandon the dollar amount of any such claim in excess of $200,000.00 so as to bring the claim, adjustment or dispute within the scope and coverage of this subsection, provided that the amount allowed to any such party by the arbitration award shall not exceed $200,000.00. Various damages claimed by the party for a single claim may not be divided into separate proceedings to create claims within the $200,000.00 limit.

110.4 ARBITRATION:

If the parties mutually agree to pursue arbitration as prescribed in Subsection 110.3.3, then a Demand for Arbitration shall be filed in writing with the American Arbitration Association or United States Arbitration and Mediation of Arizona, and a copy served thereof upon the Level III Representative or Contractor, whichever applicable. Such Demand for Arbitration shall be made by the party within thirty calendar days of the date of the Level III Representative's decision as provided for in Section 110.3 above, unless a mediation process is already underway, in which case the Demand for Arbitration shall be made within thirty days of the termination of the mediation process. The scope of the arbitration proceeding shall be restricted and limited to the matters originally presented to the Level III Representative for decision or determination and shall include no other matters. All arbitration of claims shall be conducted in Phoenix, Arizona or other mutually selected location in accordance with the rules of the arbitration service hearing the dispute.

The claim shall be submitted to a single arbitrator who shall be selected by the parties from a list of arbitrators furnished by the arbitration service. Each party shall alternately strike names from the list until only one name remains. The person whose name thus remains on the list of arbitrators is their first choice, but if that person is not available to serve, the two persons whose names were last stricken are acceptable, with the one whose name was last stricken being the first alternate.

Unless agreed to otherwise, the parties shall select the arbitrator within ten calendar days after each has received a copy of the list of arbitrators.

Each party to the arbitration shall bear its own costs, attorney fees and expert fees. Any other costs and fees assessed by the arbitration service shall be divided equally between the parties to the arbitration.

The decision or award of the arbitrator shall be supported by substantial evidence and, in writing, contain the basis for the decision or award and findings of fact. The decision or award by the arbitrator when made shall be final and nonappealable except as provided in Section 12-1512, Arizona Revised Statutes. Both parties to the Contract shall be bound by the Arbitration Award for all purposes and judgement may be entered upon it in accordance with applicable law in the Superior Court of Arizona.

110.5 DISPUTE REVIEW BOARD:

If the Dispute Review Board is utilized as prescribed in Subsection 110.3.3, the Engineer shall be notified within thirty days after the Level III Representative decision. The Dispute Review Board is a three member board independent of the parties involved in the issue. The Agency and Contractor shall each select a member for this board. The third member shall be a mutually agreed upon independent member. This Review Board must be selected within fourteen calendar days after notice to the Level III Representative. Each member shall agree to impartially serve the Agency and Contractor. Fees and expenses of Board Members are to be shared equally by Agency and Contractor. The Dispute Review Board shall meet within thirty days of the selection of the board, unless, by mutual agreement, another date is selected. The scope of the Dispute Review Board shall be restricted and limited to the matters originally presented to the Level III Representative for decision or determination and shall include no other matters. The Board shall consider and evaluate the dispute and render a written decision that assigns

financial responsibilities and allocates adjustments in the contact time, if applicable, within seven calendar days after the meeting. The decision of the dispute Review Board will be final.

110.6 FINAL DOCUMENTATION AND PAYMENT:

If at any step in the process a dispute is resolved, the Contractor must sign a supplemental agreement setting forth the resolution of the dispute and including an unconditional release as to any and all matters arising from the dispute. In addition, when the agreement results in a change in contract amount and/or time, a change order shall be prepared by the Contracting Agency for said changes and signed by both parties within 30 days from the date of the agreement. Payment of the change order will be made to the appropriate party(s) in accordance with Section 109.

End of Section

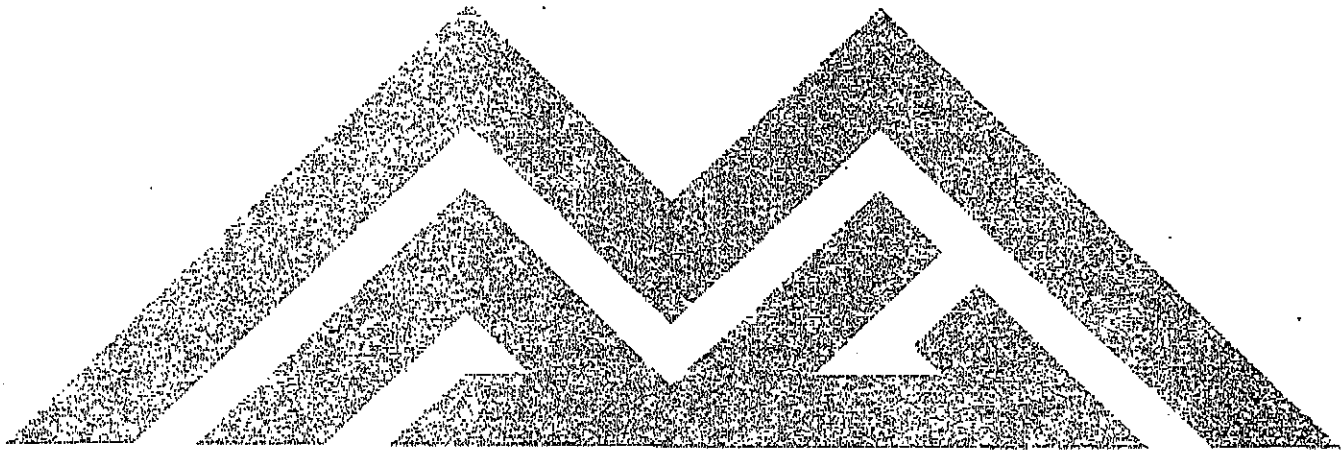

PART 200

EARTHWORK

Section	Title	
201	Clearing and Grubbing	201-1
205	Roadway Excavation	205-1
206	Structure Excavation and Backfill	206-1
210	Borrow Excavation	210-1
211	Fill Construction	211-1
215	Earthwork for Open Channels	215-1
220	Riprap Construction	220-1
225	Watering	225-1

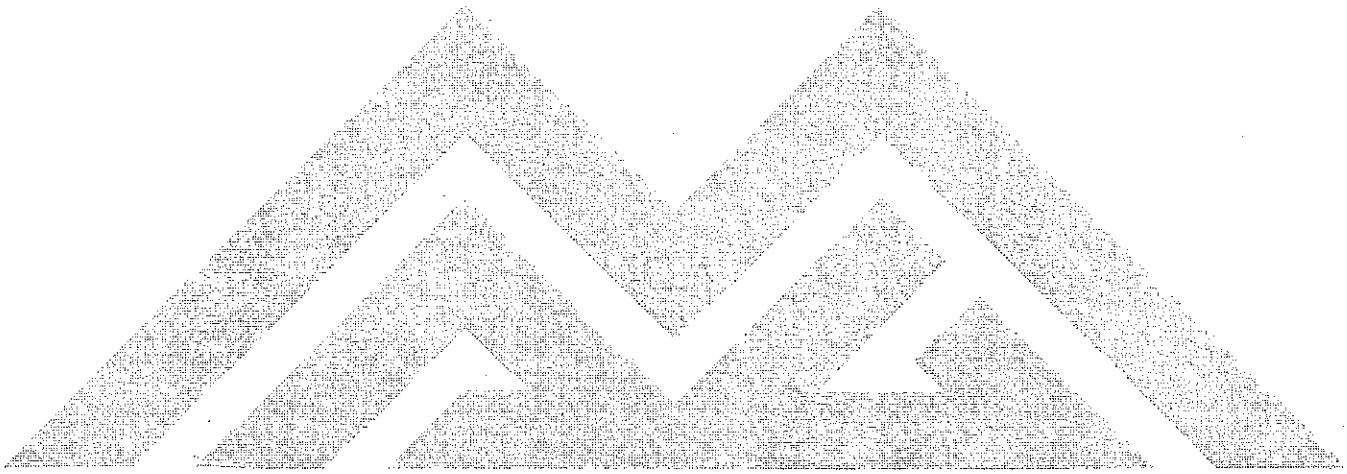

SECTION 201

CLEARING AND GRUBBING

201.1 DESCRIPTION:

This work shall consist of removing objectionable material from the right-of-way, easements and such other areas as may be specified in the special provisions. Clearing and grubbing shall be performed in advance of grading operations.

201.2 PRESERVATION OF PROPERTY:

Existing improvements, adjacent property, utilities and other facilities, and trees and plants not to be removed, shall be protected from injury or damage resulting from the Contractor's operations, see Section 107.

201.3 CONSTRUCTION METHODS:

The construction site and areas on each side of the roadway from centerline to the toe of an embankment, the top of a cut slope, the slope rounding limit or to a line 10 feet outside the edge of the surfaced area, whichever is greater, but not beyond the limits of the right-of-way, shall be cleared of all trees, stumps, brush, roots, rubbish, debris and other objectionable matter, except as follows.

All trees and shrubs found suitable for improvement and beautification, which will not interfere with excavation or embankment or cause disintegration of the improvements shall not be disturbed. In any event, the Contractor shall avoid, as far as practicable, injury to shrubbery, vines, plants, grasses and other vegetation growing outside of the clearing limits. The dragging and the piling of materials of various kinds and the preforming of other work which may be injurious to vegetation shall, insofar as practicable, be confined to areas which have no vegetation or which will be covered by embankment or disturbed by excavation during grading operations.

For the full width of all water courses within the right-of-way lines, no stump, root or other obstruction shall be left higher than the natural stream bed.

From excavated areas, all stumps, roots and other obstructions 3 inches or over in diameter shall be grubbed to a depth of not less than 18 inches below finish grade.

In embankment areas or other areas to be cleared outside the road prism slope lines, all stumps, roots and other obstructions shall not be left higher than specified in Table 201-1.

TABLE 201-1

EMBANKMENT CLEARING AND GRUBBING

Height of Embankment Over Stump	Height of Clearing and Grubbing
0 Feet to 2 Feet	All stumps or roots 6 inches or over in diameter shall be grubbed to 18 inches below original grade. All others shall be cut flush with the ground.
2 Feet to 3 Feet	All stumps 1 foot and over in diameter shall be grubbed to 18 inches below original grade. All others shall be cut flush with the ground.
Over 3 Feet	No stumps shall be left higher than the stump top diameter, and in no case more than 18 inches.

Cavities left below subgrade elevation by removal of stumps or roots shall be carefully backfilled and compacted.

Tree branches extending over the roadway, which hang within 12 feet of the profile grade or that restrict sight distance shall be cut off close to the trunk or stem of the tree in a neat and workmanlike manner. The Contractor shall remove additional tree branches under the direction of the Engineer, in such a manner that the tree will present a balanced appearance. Scars resulting from the removal of branches shall be treated with a heavy coat of an approved tree sealant.

All tree trunks, stumps, brush, limbs, roots, vegetation and other debris removed in clearing and grubbing shall be removed to locations outside of and out of sight of the right-of-way, or otherwise disposed of so as to leave the construction site and adjacent areas in a neat and finished condition, free from unsightly debris.

201.4 REMOVAL AND DISPOSAL OF SALVAGEABLE ITEMS:

Items and materials of salvage value as determined by the Engineer, unless incorporated in the new work, shall remain the property of the Contracting Agency and shall be storaged in adjacent areas as directed by the Engineer. Such items and materials shall be carefully removed and in such a manner as to permit reuse.

201.5 PAYMENT, CLEARING AND GRUBBING:

Unless otherwise provided in the special provisions or bid proposal, no payment will be made for clearing and grubbing as such; the cost thereof shall be included in the bid price for the construction or installation of the items to which said clearing and grubbing are incidental or appurtenant.

201.6 MEASUREMENT, REMOVAL AND DISPOSAL OF TREES:

If the proposal includes separate estimates of quantities for the removal of trees, the tree will be classified by size as follows:

(A) Trees 12 inches or less in diameter at 1-foot above the original ground surface will be included in the bid price for clearing and grubbing or excavation and no additional compensation will be allowed therefore.

(B) Trees more than 12 inches in diameter at 1-foot above the original ground will be included as separate bid item and payment will be made at the unit bid price quoted in the proposal.

201.7 PAYMENT, REMOVAL AND DISPOSAL OF TREES:

Payment for removal of trees will be on a unit price for each tree measured and removed, in accordance with the above classifications, at the unit price stipulated in the proposal.

End of Section

SECTION 205

ROADWAY EXCAVATION

205.1 DESCRIPTION:

Roadway excavation shall consist of excavation involved in the grading and construction of roadways, except structure excavation, trench excavation and any other excavation separately designated.

205.2 UNSUITABLE MATERIAL:

Material shall be considered unsuitable for fill, subgrade, shoulders and other uses if it contains organic matter, soft spongy earth, or other matter of such nature that compaction to the specified density is unobtainable.

Material that is unsuitable for the intended use, shall be excavated and removed from the site or otherwise disposed of as directed by the Engineer.

The removal and disposal of such unsuitable material will be paid for as roadway excavation.

205.3 OVERSHOOTING:

Material outside the authorized cross section which may be shattered or loosened because of blasting shall be removed by the Contractor at no additional cost to the Contracting Agency. The Contractor shall discontinue any method of blasting which in the opinion of the Engineer leads to excessive overshooting or is dangerous to the public or destructive to property or to natural features.

205.4 SLIDES AND SLIPOUTS:

Material outside the planned roadway or ditch slopes which in the opinion of the Engineer is unstable and constitutes potential slides, material which has come into the roadway or ditch, and material which has slipped out of new or old embankments shall be excavated to designated lines or slopes either by benching or in such manner as directed by the Engineer. Such material shall be used in the construction of the embankments or disposed of as directed by the Engineer.

The removal and disposal of slide and slipout material as specified above, not resulting from overshooting as specified above, will be paid for at the contract prices for roadway excavation; however, if due to the character of the work, the removal and disposal of such material is not properly compensable at the contract prices for roadway excavation, the work may be paid for as extra work provided the Contractor requests in writing such payment prior to performing any such work.

Only those quantities of slide or slipout material which are actually removed as ordered by the Engineer will be paid for.

205.5 SLOPES:

Excavation slopes shall be finished in conformance with the lines and grades shown on the plans. Debris and loose material shall be removed. When completed, the average plane of the slopes shall conform to the slopes indicated on the plans and no point on the completed slopes shall vary from the designated plane by more than 6 inches measured at right angles to the slope, except where excavation is in rock no point shall vary more than 2 feet from the designated plane of the slope. In no case shall any portion of the slope encroach on the roadbed.

Tops of excavation slopes and ends of excavations shall be rounded as shown on the plans and these quantities will not be included in the quantities of excavation to be paid for. This work will be considered as a part of finishing slopes and no additional compensation will be allowed therefore.

Embankment slopes shall be finished in conformance with lines and grades shown on the plans. When completed the average plane of slopes shall conform to slopes indicated on the plans and no point on the completed slopes shall vary from the designated plane by more than 6 inches measured at right angles to the slope.

205.6 SURPLUS MATERIAL:

Unless otherwise shown on the plans, specified in the special provisions, or approved by the Engineer, no surplus excavated material shall be disposed of within the right-of-way. The Contractor shall make all arrangements for disposal of the material at off-site locations as may be approved by the Engineer, and shall upon request file with the Engineer the written consent of the owner of the property upon which he intends to dispose of such material.

If the quantity of surplus material is shown on the plans or specified in the special provisions, the quantity shown or specified is approximate only. The Contractor shall satisfy himself that there is sufficient material available for the completion of the embankments before disposing of any indicated surplus material inside or outside the right-of-way. Any shortage of material caused by premature disposal of surplus material by the Contractor, shall be replaced by him and no compensation will be allowed the Contractor for such replacement.

205.7 MEASUREMENT:

The following earthwork operations will be measured as roadway excavation for the quantities of material involved.

Excavating the roadway prism including public and private road approaches, connections and driveways; excavating unsuitable material when shown on the plans or specified in the special provisions; excavating slides and slipouts not resulting from overshooting; excavating surplus material; excavating selected material and topsoil from within the limits of project and removing such materials from stockpiles when stockpiling is ordered; excavating ditches and excavating borrow.

The Engineer will compute the quantities of material excavated by a method which in his opinion is best suited to obtain an accurate determination.

Excavation in excess of the planned or authorized cross section will not be paid for, except as provided above. The Contractor shall backfill and compact unauthorized excavated areas to the original ground elevation of authorized section at no additional cost to the Contracting Agency.

Material resulting from excavating ditches or channels may be used to construct roadway embankments, dikes, or for other purposes, or disposed of, as directed by the Engineer.

Care shall be exercised to prevent excavating below the grade for the bottom of the ditch and areas excavated below grade shall be filled with suitable material and compacted by the Contractor at no additional cost to the Contracting Agency.

205.8 PAYMENT:

Quantities of roadway excavation will be paid for at the contract unit price per cubic yard. Such price shall include excavating, sloping, rounding tops and ends of excavations, loading, depositing, conditioning, spreading, and compacting the material complete in place and disposal of surplus material.

When the proposal does not include a pay item for roadway excavation the cost thereof shall be considered as being included in the price bid for the construction or installation of the items to which such roadway excavation is incidental or appurtenant.

End of Section

SECTION 206

STRUCTURE EXCAVATION AND BACKFILL

206.1 DESCRIPTION:

Structure excavation shall consist of the removal of material for the construction of foundations for bridges, manholes, retaining walls, box culverts, head walls for culverts, and other structures, and other excavation designated on the plans or in these specifications or in the special provisions as structure excavation.

Structure backfill shall consist of furnishing material, if necessary, and placing and compacting backfill material around structures to the lines designated on the plans or specified or directed by the Engineer.

Structure excavation and structure backfill shall include the furnishing of all materials and equipment and the providing of other facilities which may be necessary to perform the excavations and place and compact the backfill, and the subsequent removal of these facilities, except where they are required or permitted by the plans, special provisions or Engineer to remain in place.

206.2 FOUNDATION MATERIAL TREATMENT:

When footing concrete or masonry is to rest upon rock, the rock shall be fully uncovered and the surface thereof shall be removed to a depth sufficient to expose sound rock. The rock shall be roughly leveled off or cut to approximate horizontal and vertical steps, and shall be roughened. Seams in the rock shall be grouted under pressure or treated as the Engineer may direct and the cost thereof will be paid for as extra work.

When no piles are used and footing concrete or masonry is to rest on an excavated surface other than rock, care shall be taken not to disturb the bottom of the excavation and final removal of the foundation material to grade shall not be made until just before the concrete or masonry is placed. Except when over-excavation is directed by the Engineer, excavation below grade shall be replaced with the same class of concrete specified for the structure or with 1 ½ sack controlled low strength material as specified in Section 728. When the replacement material is structural concrete, the material shall be placed at the same time as the structure material, placement of the material shall be per Section 604 which will require a time lag between the material and the structural concrete. The placement of the additional material shall be at no cost to the Agency.

The excavation for structures shall be completed to the bottom of the footings before any piles are driven therein, and excess material remaining in the excavation after pile driving shall be removed to the elevation of the bottom of the footings.

When piles are used and ground displacement results from pile driving operations, the Contractor shall at his expense excavate or backfill the footing area to the grade of the bottom of the footing as shown on the plans with structure backfill material.

206.3 INSPECTION:

When any structure excavation is completed, the Contractor shall notify the Engineer who will make an inspection of the excavation. No concrete or masonry shall be placed until the excavation has been approved by the Engineer.

206.4 STRUCTURE BACKFILL:

Backfilling operations shall conform to the following requirements: Structure backfill shall not be placed until the structure footings or other portions of the structure or facility have been inspected by the Engineer and approved for backfilling. No backfill material shall be deposited against the back of concrete abutments, concrete retaining walls, or the outside walls of cast-in-place concrete box culverts until the concrete has developed a strength of not less than 2500 psi in compression as specified in Section 725.

All structural backfill in any existing or proposed street or where any portion of the backfill is within 2 feet of the above shall be compacted to the minimum density specified in Table 601-2, for Type I or shall be ½ sack or 1 sack controlled low strength material as specified in Sections 604 and 728.

All other structural backfill shall be compacted to the minimum density specified in Table 601-2, for Type II or shall be ½ sack or 1 sack controlled low strength material as specified in Sections 604 and 728.

206.5 PAYMENT:

Unless otherwise provided in the special provisions or proposal, no payment will be made for structure excavation and backfill as such; the cost thereof shall be included in the price bid for the construction or installation of the items to which such excavation and backfill are incidental or appurtenant.

End of Section

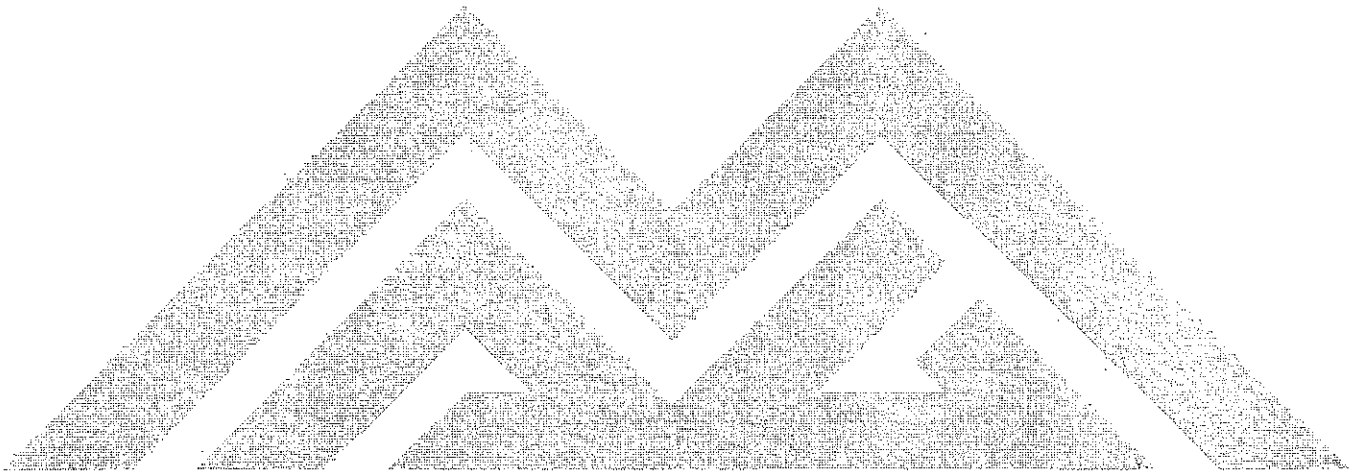

SECTION 210

BORROW EXCAVATION

210.1 LOCAL BORROW:

Local borrow shall consist of material excavated and used in the construction of fills or for use as selected material or for other construction purposes. Local borrow shall be obtained by widening cuts or by excavating from other sources outside the planned or authorized cross section within the right-of-way and within the limits of the project. Local borrow shall be excavated to the lines and grades established by the Engineer.

210.2 IMPORTED BORROW:

Imported borrow shall consist of material required for construction and unless otherwise designated in the special provisions, the Contractor shall make his own arrangements for obtaining imported borrow and he shall pay all costs involved. Imported borrow shall be obtained from sources indicated on the plans, designated in the special provisions, or approved by the Engineer.

The material shall be free from wood, vegetation, or other deleterious matter. The maximum size of this material shall not be greater than ⅔ the compacted thickness of the course placed in the subgrade.

The Contractor shall notify the Engineer sufficiently in advance of opening any material sites so that cross section elevations and measurements of the ground surface after stripping may be taken and sufficient time for testing and material will be allowed.

Borrow pits shall be excavated to regular lines to permit accurate measurement; depth of excavation throughout the area of borrow pits shall be as uniform as practicable and the side slope shall be dressed to such slope as may be directed, leaving the borrow pit area in a clean and safe condition.

210.3 PLACING AND COMPACTING:

Local borrow and imported borrow shall be placed and compacted as specified in Section 211.

The Contractor shall satisfy himself that there is sufficient space available in fill locations for placing any excavated material, before placing borrow. Any excess excavation which develops as a result of placing borrow in advance of completing excavations shall be disposed of by the Contractor at no additional cost to the Contracting Agency in accordance with the provisions in Section 205 and a corresponding reduction in the quantity of borrow to be paid for will be made, for which the Contractor will have no claim for compensation.

210.4 MEASUREMENT:

Quantities of borrow will be measured as specified for roadway excavation in Section 205.

Material excavated at the borrow site and not used on the work will be deducted from the computed quantities and will not be paid for.

210.5 PAYMENT:

Quantities of borrow excavation will be paid for at the contract unit price per cubic yard. Such price shall include excavating, sloping and cleaning of borrow area, hauling, depositing, spreading and compacting the material complete in place, and disposal of surplus material, unless an alternate basis of payment is stipulated in the proposal.

End of Section

SECTION 211

FILL CONSTRUCTION

211.1 DESCRIPTION:

Fill construction shall consist of constructing embankments except as may otherwise be specified, including the preparation of the areas upon which they are to be placed; the construction of dikes; the placing and compacting of approved material within areas where unsuitable material has been removed; and the placing and compacting of material in holes, pits, and other depressions.

211.2 PLACING:

Rocks, broken concrete, or other solid material, which are larger than 4 inches in greatest dimension shall not be placed in fill areas where piles are to be placed or driven.

When fill is to be made and compacted on hillsides or where new fill is to be compacted against existing fill or where embankment is built ½ width at a time, the slopes of original hillsides and old or new fills shall be benched a minimum of 4 feet horizontally as the fill is placed. A new bench shall be started where ever the vertical cut of the next lower bench intersects the existing ground. Material thus cut out shall be recompacted along with the new embankment material by the Contractor at no additional cost to the Contracting Agency, unless the width of the bench required exceeds 4 feet, in which case the excavated material in excess of 4 feet will be measured and paid for as excavation.

Clods or hard lumps of earth of 6 inches in greatest dimension shall be broken up before compacting the material in embankment, except as provided in the following paragraph:

When the fill material includes large rocky material, or hard lumps, such as hardpan or cemented gravel which cannot be broken readily, such material shall be well distributed throughout the fill. Sufficient earth or other fine material shall be placed around the larger material as it is deposited so as to fill the interstices and produce a dense, compact fill. However, such material shall not be placed within 2 feet of the finished grade of the fill.

211.3 COMPACTING:

Fill shall be constructed in compacted layers of uniform thickness and each layer shall be compacted in accordance with the requirements herein specified with the following exception.

Where fills are to be constructed across low, swampy ground which will not support the weight of hauling equipment, the lower part of the embankment may be constructed by dumping successive loads of suitable materials in a uniformly distributed layer of thickness not greater than that necessary to support the equipment while placing subsequent layers, after which the remainder of the embankment shall be constructed in layers and compacted as specified.

Unless specified herein, or in the special provisions, the construction of dikes, the placing and compacting of approved material within the right-of-way where unsuitable material has been removed, and the filling of holes, pits and other depressions within the right-of-way, shall conform to all of the requirements herein specified for compacting fills. Trenches, holes, depressions and pits outside of areas where fills are to be constructed shall be graded to provide a presentable and well-drained area.

Areas over which fills are to be placed shall be cleared and scarified to a depth of 6 inches to provide a bond between the existing ground and the material to be deposited thereon. Unless otherwise specified, the original ground area upon which fills are to be constructed shall be compacted to a uniform density of not less than 95 percent.

The loose thickness off each layer of fill material before compacting shall not exceed 8 inches, except as provided in the following paragraph for rocky material. Each layer shall be compacted in accordance with the following requirements to a uniform density of not less than 90 percent, except that where a new or widened roadway and appurtenances are required, density of the upper 2 feet and when the fill is within 2 feet of the above shall be not less than 95 percent.

When fill material contains by volume over 25 percent of rock larger than 6 inches in greatest dimension, the fill below a plane 3 feet below finished grade may be constructed in layers of a loose thickness before compaction not exceeding the maximum size of rock in the material but not exceeding 3 feet in thickness.

The interstices around the rock in each layer shall be filled with earth or other fine material and compacted. Broken portland cement concrete and bituminous type pavement obtained from the project excavations will be permitted in the fill with the following limitation:

(A) The maximum dimension of any piece used shall be 6 inches.

(B) Pieces larger than 4 inches shall not be placed within 12 inches of any structure.

(C) Pieces larger than 2½ inches shall not be placed within 12 inches of the subgrade for paving.

(D) Nesting of pieces will not be permitted.

At the time of compaction, the moisture content of fill material shall be such that the specified relative compaction will be obtained and the fill be firm and unyielding. Fill material which contains excessive moisture shall not be compacted until the material is dry enough to obtain the required relative compaction. Full compensation for any additional work involved in drying fill material to the required moisture content shall be considered as included in the contract price paid and no additional compensation will be allowed therefore.

Embankments shall be constructed so that each layer shall have a cross fall of at least 2 percent but no more than 5 percent.

211.4 TESTS:

Unless otherwise provided in the plans or special provisions the fill shall be thoroughly compacted to not less than the stated densities when tested and determined by AASHTO T-99, Method A, and T-191 or ASTM D-2922 and D-3017 with the percent of density adjusted in accordance with the rock correction procedure for maximum density determination, standard detail, to compensate for the rock content larger than that which will pass a No. 4 sieve.

211.5 MEASUREMENT:

The quantities of fill construction used to construct embankments or dikes will be those of the complete bid item, in place, within the limits of dimensions shown on the plans.

The Engineer will compute the quantities of fill by a method which in his opinion is best suited to obtain an accurate determination.

211.6 PAYMENT:

Quantities of fill construction will be paid for at the contract unit price per cubic yard of fill as stipulated in the proposal. Such price shall include placing and compaction and all related work as specified above, unless an alternate basis of payment is stipulated in the proposal.

Unless otherwise provided in the special provisions, no payment will be made for fill construction to replace unsuitable material or for fill for holes, pits, and other depressions. The cost thereof shall be included in the price bid for the construction of the items to which such fill is incidental or appurtenant.

End of Section

SECTION 215

EARTHWORK FOR OPEN CHANNELS

215.1 DESCRIPTION:

Earthwork for open channels shall consist of clearing, stripping, excavation, fill, backfill, grading and disposal of excavated and removed material.

Open channels for the purpose of this section shall mean open rectangular concrete channels and lined or unlined trapezoidal channels.

215.2 STRIPPING:

When stripping is indicated on the plans or specified in the special provisions, the Contractor shall strip the soil from the designated areas to the depths shown or specified or as directed by the Engineer.

The material obtained from stripping operations shall be disposed of away from the site unless otherwise specified, shown on the plans or authorized by the Engineer.

Soil loosened below the stripping depth specified or designated by the Engineer, shall be compacted. Soil removed below stripping depth shall be replaced with approved material and compacted up to the designated grade. All such filling and compacting shall be done by the Contractor at no additional cost to the Contracting Agency.

215.3 EXCAVATION:

Excavation in open cut for lined channels may be made so as to place concrete directly against the excavated surfaces providing the faces of the excavation are firm and unyielding; are such as will stand or can be made to stand without sloughing and are, at all points outside the concrete lines shown on the plans.

Excavation to provide a subgrade for lined channels, or subdrainage material, shall be to the lines indicated on the plans; and, excavation made below subgrade shall be backfilled and compacted to a uniform density of not less than 90 percent or, if approved by the Engineer, with concrete or other materials being placed. However, no payment will be made for such over-excavation or material used for such backfill.

Where it becomes necessary to excavate beyond normal lines of excavation in order to remove boulders or other interfering objects, the voids remaining after the removal of such boulders or interfering objects shall be backfilled as specified below, or as otherwise approved by the Engineer.

(A) When the void is below the subgrade for reinforced concrete channel, it shall be filled with suitable material, as approved by the Engineer, and compacted to a uniform density of not less than 90 percent. With the approval of the Engineer, concrete of the same mix as used in the concrete channel, may be used.

(B) When the void is in the side of the excavation, it shall be filled with suitable material as approved by the Engineer, placed in the manner and to the same uniform density as the backfill in the vicinity of the void. With the approval of the Engineer, concrete of the same mix as used in the concrete channel may be used. If concrete is placed prior to lining, a lower grade concrete may be used only if approved by the Engineer.

It shall be understood that the removal of boulders or other interfering objects and the backfilling of voids caused by such removals shall be done by the Contractor at no additional cost to the Contracting Agency. The cost of such work shall be included in the prices bid for the various items of work.

If during the progress of excavation, material is encountered, which, in the opinion of the Engineer, is unsuitable for subgrade for the channel to be constructed on, the Engineer may direct the Contractor to excavate beyond the pay lines shown on the plans. However, the suitability of subgrade shall be determined by the Engineer on the basis of its ability to withstand the load of the proposed channel and not upon the capacity to withstand the loads which may be placed upon it by the Contractor's equipment. Should the Contractor be directed to excavate beyond the pay lines shown on the plans, said pay lines will be extended to include such ordered excavation; and the pay lines for subdrainage material, if used, will be adjusted accordingly.

Materials used or work performed by the Contractor, to stabilize the subgrade so it will withstand loads which may be placed upon it by his equipment shall be accomplished by the Contractor at no additional cost to the Contracting Agency.

215.4 FILL AND BACKFILL:

Unless otherwise specified in the special provisions, material obtained from the project excavations may be presumed to be suitable for use as fill or backfill provided that all organic material, rubbish, debris, and other objectionable material is first removed. However, stone, broken portland cement concrete and bituminous type pavement obtained from the project excavations will be permitted in the backfill or fill with the limitations as specified in Section 211.

Unless otherwise specified in the special provisions, the density of fills and backfills shall be at least 90 percent.

215.5 GRADING:

Grading of unlined channels, levees and access roads shall conform to the following tolerances:

(A) A vertical tolerance of none above and 3 inches below the specified grade will be allowed on:

(1) Channel bottom

(2) Channel side slopes in both cut and fill

(3) Levee and access road side slopes in cut

(B) A vertical tolerance of none below and 3 inches above the specified grade will be allowed on:

(1) Top surface of levee and access road in both cut and fill

(2) Levee and access road side slopes in fill

Regardless of the construction tolerances specified, excavation and grading shall be performed so that finished surfaces are in uniform planes with no abrupt breaks in the surface.

Construction tolerances specified above for grading are solely for purposes of field control.

215.6 TESTS:

Density tests shall be made in accordance with Section 211.

215.7 MEASUREMENT:

If compensation for stripping is included in the price paid for other items of work the Contractor shall notify the Engineer sufficiently in advance of excavation or other work so that cross section elevations and measurements of the ground surface may be taken upon completion of stripping.

The Engineer will compute the quantity of excavation by a method which in his opinion is best suited to obtain an accurate determination.

215.8 PAYMENT:

Earthwork for open channels will be paid for on a lump sum basis or at the contract unit price per cubic yard of excavation as stipulated in the proposal. Such price shall include clearing, stripping, excavation, fill, backfill, compaction, grading, hauling, removal and disposal of excess excavated material and debris unless an alternate method of payment is stipulated in the proposal.

End of Section

SECTION 220

RIPRAP CONSTRUCTION

220.1 DESCRIPTION:

The construction of riprap shall consist of furnishing and placing stone, with or without grout, or sacked concrete riprap. The depth and type of riprap shall be as shown on the plans or specified in the special provisions.

220.2 MATERIALS:

Materials furnished for riprap shall conform to the requirements of Section 703.

220.3 PREPARATION OF GROUND SURFACES:

The bed for the riprap shall be shaped and trimmed to provide even surfaces. A footing trench shall be excavated along the toe of the slope as shown on the plans.

220.4 PLAIN RIPRAP:

When the required riprap is less than 20 inches in depth, stone shall be placed by hand. Stone shall be placed to provide a minimum of voids. The larger stone shall be placed in the toe trench, foundation course, and on the outer surface of the riprap. Stones shall be placed with their longitudinal axis normal to the face of the embankment and so arranged that each stone above the foundation course has at least a 3 point bearing on the underlying stones. Bearing on smaller stones used to chink voids will not be acceptable. Interstices between stones shall be chinked with small stones and spalls. The finished surface shall be even and tight and shall not vary from the planned surface by more than 3 inches per foot of depth.

When the required riprap is 20 inches or more in depth, the stone may be placed by dumping and spread in layers by bulldozers or other suitable equipment.

220.5 GROUTED RIPRAP:

Riprap shall be placed as specified and grouted with portland cement mortar. The grout shall consist of 1 part cement and 3 parts by volume or aggregate. The portland cement shall be Type II as specified in Section 725 and the aggregate shall be 2 parts sand and 1 part gravel passing a ⅜ inch square mesh screen. The quality of the sand and gravel shall be as specified in Section 701.

The amount of water shall be such as to permit gravity flow into the interstices with limited spading and brooming. The consistency of the grout shall be as approved by the Engineer.

Except when hand mixing is permitted by the Engineer, grout shall be mixed in an approved machine mixer for not less than 1½ minutes. Should hand mixing be permitted, the cement and aggregate shall be thoroughly mixed in a clean, tight mortar box until the mixture is of uniform color after which clean water shall be added in such quantity as to provide a grout of the specified consistency.

220.6 SACKED CONCRETE RIPRAP:

Slopes on which the sacked concrete riprap is to be placed shall be finished within 0.2 foot of the designated grades. The first course shall be a double row of stretchers laid in a neatly trimmed trench. The second course shall be a single row of headers. The third and remaining courses shall be stretchers or headers as shown on the plans or specified in the special provisions and shall be placed so that joints between courses are staggered. Dirt and debris shall be removed from the tops of sacks before the next course is laid thereon. Headers shall be placed with the folds upward. Not more than 4 vertical courses shall be placed in any tier until the initial set has taken place in the first course of any such tier.

When, in the opinion of the Engineer, there will not be proper bearing or bond due to delays in placing succeeding layers of the hampering of work by storm, mud or for any cause, a small trench shall be excavated back of the row of sacks already in place and this trench filled with fresh concrete before more sacks are placed. Payment for excavating the trenches shall be considered as included in the payment for the concrete in the trench.

Sacked concrete riprap shall be cured by sprinkling with a fine spray of water every 2 hours during daylight for not less than 3 days.

220.7 MEASUREMENT:

The quantities of riprap construction shall be those of the completed bid item, in place, within the limits of dimensions shown on the plans.

The Engineer will compute the quantities of riprap by a method which, in his opinion, is best suited to obtain an accurate determination.

220.8 PAYMENT:

Payment for riprap will be made for the number of cubic yards of riprap in place, on the basis of unit prices stipulated in the proposal and shall include preparation of ground surfaces and trenching, unless an alternate basis for payment is stipulated in the proposal.

End of Section

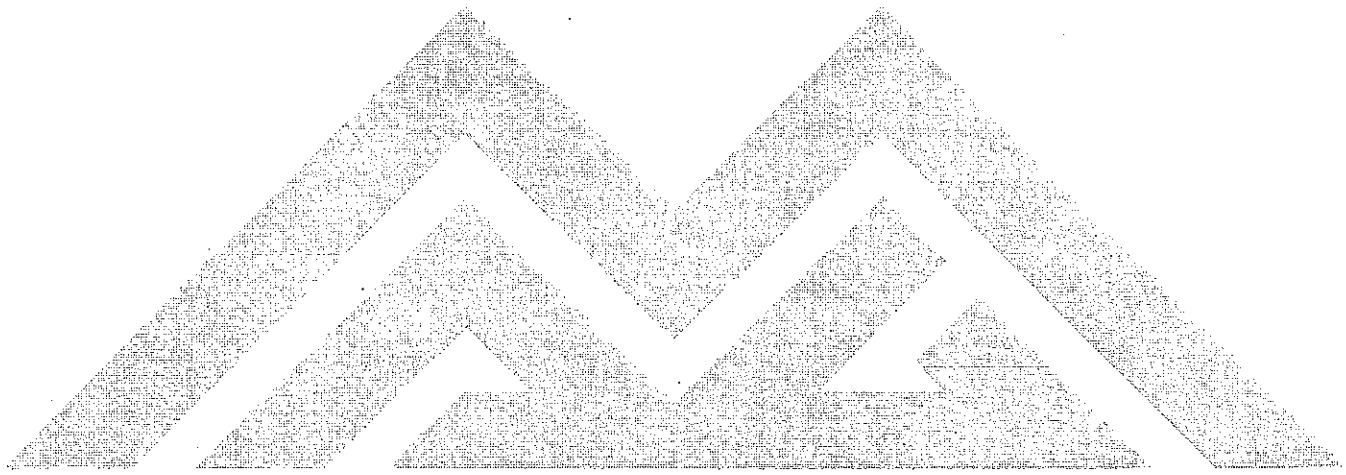

SECTION 225

WATERING

225.1 DESCRIPTION:

Water for compacting embankments, constructing subgrade, placement of screened gravel and crushed surfacing, and for laying dust caused from grading operations or public travel, shall be applied in the amounts and places as directed by the Engineer.

225.2 WATER SUPPLY:

Water shall consist of providing a water supply sufficient for the needs of the project and the hauling and applying of all water required.

The Contractor shall make arrangements for and provide all necessary water for his construction operation and domestic use at his own expense.

If the Contractor purchases water from a water utility at a fire hydrant on or near the project, all arrangements shall be made by him at his own expense and payment made direct to the water utility as agreed upon.

The Contractor shall use only those hydrants designated by the water utility in charge of water distribution and in strict accordance with its requirements for hydrant use.

The Contractor shall furnish all connections, wrenches, valves and small tools that may be necessary to meet the requirements of the water utility pertaining to hydrant use.

225.3 CONSTRUCTION EQUIPMENT:

The tank truck and/or trailer shall meet all safety and licensing regulations and the water shall be applied by sprinkling with tank trucks equipped with spray bars and suitable apparatus.

225.4 MEASUREMENT:

No measurement will be made of water, unless otherwise provided for in the special provisions or proposal.

225.5 PAYMENT:

The cost of watering will be included in the price bid for the construction operation to which such watering is incidental or appurtenant, unless otherwise provided for in the special provisions or proposal.

End of Section

PART 300

STREETS AND RELATED WORK

Section	Title	
301	Subgrade Preparation	301-1
309	Lime Slurry Stabilization	309-1
310	Untreated Base	310-1
311	Soil Cement Base Course	311-1
312	Cement Treated Base	312-1
313	Bituminous Treated Base Course	313-1
315	Bituminous Prime Coat	315-1
320	Road-mixed Surfacing	320-1
321	Asphalt Concrete Pavement	321-1
322	Asphalt Concrete Overlay	322-1
323	Heater Remix Resurfacing	323-1
324	Portland Cement Concrete Street Pavement	324-1
327	Hot In -Place Recycling	327-1
329	Tack Coat	329-1
330	Asphalt Chip Seal	330-1
332	Asphalt Emulsion Slurry Seal Coat	332-1
333	Fog Seal Coats	333-1
334	Preservative Seal for Asphalt Concrete	334-1
335	Hot Asphalt-rubber Seal	335-1
336	Pavement Matching and Surfacing Replacement	336-1
340	Concrete Curb, Gutter, Sidewalk, Driveway and Alley Entrance	340-1
341	Terrazzo Sidewalks	341-1
342	Decorative Pavement Concrete Paving Stone or Brick	342-1
343	Exposed Aggregate Paving	343-1
345	Adjusting Frames, Covers, Valve Boxes and Water Meter Boxes	345-1
350	Removal of Existing Improvements	350-1
360	Telecommunications Installation	360-1

SECTION 301

SUBGRADE PREPARATION

301.1 DESCRIPTION:

This section shall govern the preparation of natural, or excavated areas prior to the placement of sub-base material, pavement, curbs and gutters, driveways, sidewalks or other structures. It shall include stripping and disposal of all unsuitable material including existing pavement and obstructions such as stumps, roots, rocks, etc., from the area to be paved.

301.2 PREPARATION OF SUBGRADE:

With the exception of areas where compacted fills have been constructed as specified in Section 211 in the areas where new construction is required the moisture content shall be brought to that required for compaction by the addition of water, by the addition and blending of dry, suitable material or by the drying of existing material. The material shall then be compacted to the specified relative density. If pumping subgrade should become evident at any time prior to paving, the Engineer may require proof rolling with a pneumatic-tire roller or other approved equipment in order to identify the limits of the unacceptable area. The proof rolling will be performed at no additional cost to the Contracting Agency.

301.3 RELATIVE COMPACTION:

The subgrade shall be scarified and loosened to a depth of 6 inches. When fill material is required, a layer of approximately 3 inches may be spread and compacted with the subgrade material to provide a better bond. The subgrade cut and fill areas shall be constructed to achieve a uniform soil structure having the following density when tested in accordance with AASHTO T-99, Method A, and T-191 or ASTM D-2922 and D-3017 with the percent of density adjusted in accordance with the rock correction procedures for maximum density determination, standard detail, to compensate for the rock content larger than that which will pass a No. 4 sieve.

(A) All Streets	95 percent
(B) Other traffic ways	90 percent
(C) Curbs, gutters and sidewalks	85 percent

301.4 SUBGRADE TOLERANCES:

Subgrade upon which pavement, sidewalk, curb and gutter, driveways, or other structures are to be directly placed shall not vary more than ¼ inch from the specified grade and cross-section. Subgrade upon which sub-base or base material is to be placed shall not vary more than ¾ inch from the specified grade and cross-section. Variations within the above specified tolerances shall be compensating so that the average grade and cross-section specified are met.

301.5 GRADING OF AREAS NOT TO BE PAVED:

Areas where grade only is called for on the plan shall be graded to meet the tolerances for the subgrade where sub-base or base material is to be placed. The surface shall be constructed to a straight grade from the finished pavement elevations shown on the plans to the elevation of the existing ground at the extremities of the area to be graded.

301.6 PROTECTION OF EXISTING FACILITIES:

The Contractor shall exercise extreme caution to prevent debris from falling into manholes or other structures. In the event that debris should fall into a structure it shall immediately be removed.

301.7 MEASUREMENT:

Measurement for grading under pavement will be by the square yard.

301.8 PAYMENT:

Payment for this grading work will be made only when it is performed for street or roadway paving projects. Payment for necessary grading for items outside of the lip of gutter shall be included in the cost of those items.

Payment will be made at the unit price bid per square yard, and such payment shall be compensation in full for the item complete in place, including stripping, excavating, hauling, filling, compacting, and disposing of excess or unsuitable materials, together with all costs incidental thereto.

End of Section

SECTION 309

LIME SLURRY STABILIZATION

309.1 DESCRIPTION:

This section shall consist of constructing a mixture of soil, lime and water for the stabilization of soils or base materials. The work shall be performed in conformity with the lines, grades thickness, and typical cross sections shown on the plans.

309.2 MATERIALS:

309.2.1 Soil or Subgrade: The soil or subgrade material used for this work shall consist of materials on the site or imported and shall be free of roots, sod, weeds and stones larger than 3 inches and have a Plasticity Index (PI) greater than 10, when tested in accordance with AASHTO T-89 & T-90.

309.2.2 Quicklime and Hydrated Lime: Lime used to manufacture the commercial lime slurry specified herein, shall be either quick lime or hydrated lime and shall conform to the requirements of ASTM C-977. Lime may only be used in the production of a lime slurry. The direct use of dry hydrated lime or quicklime to the soil material is strictly prohibited. All lime shall come from a single source. If a source change is requested, a new mix design shall be submitted using lime from the proposed new source. The new design must be approved by the Engineer prior to use.

309.2.3 Commercial Lime Slurry: Commercial lime slurry shall be a pumpable suspension of solids in water. The water or liquid portion of the slurry shall not contain dissolved material in sufficient quantity naturally injurious or objectionable for the purpose intended. The solids portion of the mixture, when considered on the basis of solids content, shall consist principally of hydrated lime of a quality and fineness sufficient to meet the following requirements as to chemical composition and residue.

(A) Chemical Composition: The solids content of the lime slurry shall consist of a minimum of 90% by weight, of calcium and magnesium oxides (Ca0 and Mg0), as determined by ASTM C-25.

(B) Residue: The percent by weight of residue retained in the solids content of lime slurry shall conform to the following requirements:

Residue retained on a No. 6 sieve	Max.	0.2%
Residue retained on a No. 30 sieve	Max	4.0%

(C) Grade: Commercial lime slurry shall conform to a dry solids content as approved by the Engineer.

A certificate of compliance and a field summary of lime slurry produced shall be provided to the Engineer for each load of slurry.

309.2.4 Water: Water used for mixing or curing shall be reasonable clean and free of oil, salt, acid, alkali, sugar, vegetable, or other substances injurious to the finished product. Water shall be tested in accordance with and shall meet the suggested requirements of AASHTO T-26. Water known to be of potable quality may be used without test.

309.3 COMPOSITION:

309.3.1 Lime Slurry: Lime slurry shall be applied at the mix design rate for the depth of subgrade stabilization shown on the plans or requested by the Engineer.

309.3.2 Mix Design: Before commencing lime treatment work, the Contractor shall submit for approval by the Engineer, a proposed mix design. The proposed mix design shall be prepared by a testing laboratory under the direction and control of a registered Professional Engineer. The mix design shall be determined using the soils or subgrade material to be stabilized and lime from the proposed supplier and shall determine the following:

(a) Percent of lime and rate of application of lime slurry in the treated soil or subgrade material.
(b) Optimum water content during mixing, curing and compaction.
(c) Gradation of in-situ mixture after treatment.
(d) Additional mixing or equipment requirements.
(e) Mellowing time requirements, if needed.

The mix design shall comply with the following requirements:

(a) pH: Minimum 12.4 after compaction of initial mixing with lime at ambient temperature, in accordance with Eades-Grimm pH test method (ASTM C977 APPENDIX).
(b) Plasticity Index: Less than 3, per AASHTO T-89 & T-90.
(c) Swell Potential: One (1) percent or less vertical expansion of an air dried soil when inundated with water and allowed to swell at a confined pressure of 60 psi.
(d) Hydrated Lime Content: Minimum 5.0 percent by dry weight of the combined lime/soil mixture, per ASTM D-3155.
(e) Unconfined Compressive Strength: Minimum 160 psi in five days curing at 100°F. when tested in accordance with ASTM D-1633 Method A.

309.3.3 Tolerance: At final Compaction, the lime and water content for each course of subgrade treatment shall conform to the approved mix design with the following tolerance:

Material	Tolerance
Lime	+0.5% of design, (ASTM C-114)
Water	+4%, -0% of optimum, (ASTM D-698)

309.4 CONSTRUCTION:

309.4.1 General: It is the primary requirement of this specification to secure a completed subgrade containing a uniform lime mixture, free from loose segregated areas, of uniform density and moisture content, well bound for its full depth, and with a smooth surface suitable for placing subsequent courses.

Prior to beginning any lime slurry stabilization, the subgrade shall be constructed and brought to grade and shall be shaped to conform to the typical sections, lines and grades as shown on the plans.

When the design requires treatment to a depth greater than 12 inches, the subgrade soil shall be treated in equal layers. The top layer(s) of soil shall be removed and stockpiled. The lower layer of soil to be treated shall then be treated and allowed to cure in place. After final mixing, the lower layer shall be compacted in maximum 12 inch compacted lifts. The stockpiled soil shall then be placed, treated, mixed and compacted in successive maximum 12 inch compacted lifts.

309.4.2 Weather Limitation: Lime slurry treated subgrade shall not be constructed if the atmospheric temperature is below 40° F. or when conditions indicate that temperatures may fall below 40° F. within 24 hours.

309.4.3 Equipment: Contractor shall provide all equipment necessary to complete the work including grading and scarifying equipment, a spreader of the lime slurry (gravity feed spreader, will not be permitted), mixing and pulverizing equipment, sheepsfoot and pneumatic rollers, sprinkling equipment and trucks. When using dry hydrate to make slurry, agitators are mandatory in distributor trucks. All equipment used for this work is subject to approval by the Engineer.

309.4.4 Application: Lime slurry shall be spread only on that area where the mixing operation can be completed during the same working day. The application and mixing of lime with the soil shall be accomplished by the methods hereinafter described as Slurry Placing.

Slurry Placing: Lime slurry shall be mixed in a portable mixing unit and spread with trucks equipped with an approved distribution system as a slurry. Commercial lime slurry shall be applied with a lime percentage not less than specified herein. The distribution of lime slurry shall be attained by successive passes over a measured section of subgrade until the proper amount of lime has been spread, as determined in the job mix design. The rate of application shall be verified using the methods outlined by ASTM D-3155.

Thickness: The thickness of the lime slurry treated subgrade shall be determined by visual inspection and/or by depth tests taken at intervals so that each test shall represent no more than 1000 square yards per layer. If more than one layer, the method used to remove material to determine the depth of lime treatment may be by shovel and/or pick, coring or other method approved by the Engineer. Phenolphthalein solution shall be used to detect the presence of lime. When the grade deficiency is more than 1 inch, the Contractor shall correct such areas in a manner satisfactory to the Engineer. Contractor shall replace, at no cost to the Agency, the material where depth tests are taken.

No traffic other than the mixing equipment will be allowed to pass over the spread of lime slurry until after completion of mixing.

The Engineer reserves the right to vary the rate of application of lime from the specified application rates during the progress of construction as necessary to maintain a pH of the lime/soil mixture above 12.4 and the desired characteristics of the treated subgrade.

309.4.5 Mixing: The full depth of the treated subgrade shall be mixed with an approved mixing machine. The use of disc plows or blades are strictly prohibited except in areas specified by the engineer. To insure a complete chemical reaction of the lime and soil or subgrade, water shall be used as required to maintain a minimum moisture content 4% above the optimum prior to beginning compaction and held at 0-4% above optimum during compaction. During the interval of time between application and mixing, lime that has been applied, unmixed and exposed to the open air for 10 hours or more will not be accepted.

After mixing and prior to compaction, clay lumps shall meet the following criteria:

	Percent
Minimum of clay lumps passing 1-1/2 inch sieve	100
Minimum of clay lumps passing No. 4 sieve	60

309.4.6 Compaction: Compaction of the mixture shall begin after final mixing. Sheepsfoot or segmented sheel rollers shall be used during initial compaction. Steel wheel or pneumatic tired rollers shall be used only during final compaction. Areas inaccessible to rollers shall be compacted to the required density by methods approved by the Engineer.

The material shall be aerated or watered as necessary to provide and maintain required moisture content. The field density of the compacted mixture shall be at least 95 percent of the maximum density at 0-4% above optimum moisture. A composite of untreated soil or subgrade materials from a minimum of five (5) random locations, per soil type, within the area to be stabilized shall be used to determine the maximum density and optimum moisture content in accordance with ASTM D-558. The in-place filed density shall be determined in accordance with ASTM D-1556, ASTM D-2167 or ASTM D-2922.

After each section is completed, tests will be made by the Engineer. If the material fails to meet the density requirements, it shall be reworked to meet requirements.

If pumping subgrade should become evident at any time prior to paving, the Engineer may require proof rolling with a pneumatic-tire roller or other approved equipment in order to identify the limits of the unacceptable area. The proof rolling will be performed at no additional cost to the Contracting Agency.

All irregularities, depressions, or weak spots which develop shall be corrected immediately by scarifying the areas affected, adding or removing material as required, and reshaping and recompacting. The surface of the course shall be maintained in a smooth condition, free from undulations and ruts, until other work is placed thereupon or the work is accepted. Compaction and finishing shall be done in such a manner as to produce a smooth dense surface free of compaction planes, cracks, ridges or loose materials.

Throughout this entire operation, the shape of the course shall be maintained by blading, and the surface upon completion, shall be smooth and shall conform with the typical section shown on the plans and to the established lines and grades. Should the material, due to any reason or cause, lose the required stability, density, and finish before the next course is placed or the work is accepted, it shall be recompacted and refinished at no cost to the Agency.

309.4.7 Finishing And Curing: After the final layer or course of lime treated subgrade has been compacted, it shall be brought to the required lines and grades in accordance with the plans. The completed section shall then be finished by rolling with a pneumatic or other suitable roller.

The final layer of lime treated subgrade shall be maintained in a moist condition until the next layer of pavement structure is placed. If required, a fog seal for curing, in compliance with section 333, shall be furnished and applied to the surface of the final layer of the lime stabilized material as soon as possible after the completion of final rolling and before the temperature falls below 40° F. Curing seal shall be applied at a rate between 0.10 and 0.20 gallons per square yard of surface. The exact rate will be determine by the Engineer.

After curing begins, all traffic, except necessary construction equipment shall be kept off the lime stabilized subgrade for a minimum of 7 days or until the final pavement structure layer(s) are placed.

309.4.8 Maintenance: The Contractor shall maintain, at his/her own expense, the entire lime slurry treated subgrade in good condition from the start of work until all the work has been completed, cured and accepted by the Engineer.

309.5 MEASUREMENT:

The quantity of lime slurry treated soils shall be measured by the square yard, measured in place, treated, compacted, to the proper depth, and accepted.

The quantity of curing seal shall be measured by the ton.

309.6 PAYMENT:

The lime slurry treated soils measured as provided above, will be paid for at the contract price per square yard, which price shall be full compensation for the item complete, as herein described and specified.

Payment for curing seal will be by the ton, based on the rate of application as requested by the Engineer.

End of Section

SECTION 310

UNTREATED BASE

310.1 DESCRIPTION:

Untreated base, i.e., select or aggregate base course, shall comply with Subsection unless the use of a different type of material is specifically authorized in the special provisions.

310.2 PLACING:

Untreated base 6 inches or less in compacted thickness may be placed in a single layer and those more than 6 inches in thickness shall be built up in successive layers of approximately equal compacted thickness not to exceed a maximum thickness of 6 inches. The requirements which follow are applicable to all types of material.

After distributing, the base material shall first be watered and then immediately bladed to a uniform layer that will net, after rolling, the required thickness. If the materials deposited are not uniformly blended together, the blading operation shall be continued to such extent as may be necessary to eliminate segregation. The quantity of water applied shall be that amount which will assure proper compaction resulting in a relative density of not less than 100 percent as determined under Section 301. Care shall be exercised in connection with watering operations to avoid wetting the subgrade or any lower base course to detrimental extent.

Upon completion, the base surface shall be true, even and uniform conforming to the grade and cross-section specified.

Untreated base may vary not more than ½ inch above or below required grade and cross-section.

310.3 DEFICIENCY:

When in the opinion of the Engineer there is reason to believe that a deficiency in thickness, or an excess of plasticity exists, measurements or samples will be taken in the same pattern as that defined in Section 321. If the base has been covered or it is otherwise impractical to correct the deficiency, the corrective measures in Table 310-1 shall be taken by the Contractor at no additional cost to the Contracting Agency.

TABLE 310-1

THICKNESS AND PLASTICITY DEFICIENCY

Type	Deficiency	Corrective Measure
I	½" or more but less than 1" in thickness	Place asphalt chip seal using precoated chips in accordance with Section 330 for the full roadway width over the area involved but for not less than 660 feet or one City block in length.
II	1" or more in thickness	Place an additional asphalt concrete overlay, a 9.5 mm mix, of ½ the thickness of the deficiency in thickness for the full roadway width over the area involved, not less than 660 feet or one City block in length.
III	A plasticity index of 6 to 7 inclusive*	Place an asphalt concrete overlay ½ inch in thickness over the same total area as required for Type I and II.
IV	A plasticity index of over 7*	Remove deficient material from affected area and replace with material complying with the specifications.

* The plasticity index shall be in accordance with AASHTO T-146 Method A (wet preparation), T-89 and T-90.

310.4 PAYMENT:

Payment for untreated base will be made on the basis of the price bid per ton unless an alternate basis of payment is provided in the proposal.

End of Section

SECTION 311

SOIL CEMENT BASE COURSE

311.1 DESCRIPTION:

This item shall consist of a base course composed of a mixture of local soil, portland cement, and water compacted at optimum moisture content.

311.2 MATERIALS:

Portland cement and water shall comply with Sections 725 and 225. The soil for the mixture shall consist of the material in the area to be paved. The material shall not contain more than 5 percent gravel or stone retained on a 3 inch sieve. It shall be demonstrated by laboratory tests that the plasticity and hardening characteristics of the soil will be adequately modified by the specified cement content.

311.3 EQUIPMENT:

An ample number of machines, combination of machines and equipment shall be provided and used to produce the complete soil cement base course meeting the requirements for soil pulverization, cement distribution, water application, incorporation of materials, compaction, finishing, and for application of the curing material as provided in these specifications.

Mixing shall be accomplished by means of multiple-pass soil-cement mixer, single-pass soil-cement mixer or central plant mixer.

Water may be applied through the mixer or with the water trucks equipped with pressure sprays. Water trucks providing fine fog-type sprays shall be furnished for finishing and curing. Properly adjusted garden type nozzles on a pressure bar may be used to produce fog spray if approved by the Engineer.

Cement spreader shall be a specially constructed device to distribute bulk cement uniformly at rate specified either in windrows or on the flat as determined by method of mixing.

311.4 CONSTRUCTION METHODS:

Before undertaking construction of the soil cement base course, the area to be paved shall be brought to a compacted condition, true to line and grade as directed by the Engineer or as shown on the plans. During this process any unsuitable soil or material, including excess material retained on a 3 inch sieve, shall be removed and replaced with acceptable material. The compacted surface shall be at the proper elevation as specified, shown on the plans, or as directed by the Engineer, for the top of the soil cement base. At completion of this phase, the material and surface shall be approved by the Engineer before proceeding with the next step.

The material shall be scarified, pulverized, mixed with water and cement, compacted and finished and cured in lengths permitting the full roadway width to be complete in not more than 4 hours from the time that cement is exposed to water. Such lengths will generally be not less than 600 feet or the length of one City block and preferably more. Where a gutter section exists the material shall be pulled back from the gutter face for the full depth of the course before processing.

311.4.1 Pulverizing: Before application of cement, soil to be processed shall be scarified to depth of base. The material should be damp at time of scarifying to reduce the dust to a minimum and to aid in pulverization. If the soil contains clods, it shall be pulverized until not less than 80 percent, exclusive of gravel or stone, will pass a No. 4 sieve.

311.4.2 Application of Cement: The quantity of cement shall be by weight as a percentage of the dry weight of the soil as determined by the laboratory and/or as directed by the Engineer and shall be applied uniformly on the soil in a manner satisfactory to the Engineer. The allowable deviation in uniformity shall not exceed 10 percent. The entire operation of spreading and mixing shall be conducted in such a manner as will result in a uniform soil cement and water mixture for the full design width and depth.

The percentage of moisture in the soil, at the time of cement application, shall not exceed the quantity that will permit a uniform and intimate mixture of the soil and cement during mixing operations, and it shall not exceed the specified optimum moisture content for the soil cement mixture.

311.4.3 Mixing: Mixing with addition of water as required shall be continued until the product is uniform in color and at optimum moisture content. Any mixture of soil and cement which has not been compacted and finished shall not remain undisturbed for more than 30 minutes but shall be agitated by remixing.

311.4.4 Optimum Moisture: Optimum moisture requirements and field tests of moisture density shall be determined in accordance with AASHTO T-134, T-191, T-127, or ASTM D-558, D-2922, D-3017 on representative samples of soil cement mixture obtained from the area being processed. At time of laydown, the moisture content shall not be below optimum moisture, and shall be less than that quantity which will cause the base course to become unstable during the compaction and finishing process. Any area which becomes so unstable shall be removed and replaced with new cement stabilized material.

311.4.5 Compaction: After mixing is complete, the mixture shall be carefully placed in a uniform loose depth which will provide a surface true to grade and section when compacted. Unless otherwise directed by the Engineer, initial compaction shall be by means of a tamping, grid, or pneumatic roller. After the tamping roller has partially walked out, pneumatic rollers shall be used. Density of final product shall be not less than 95 percent as determined by AASHTO or ASTM as specified above.

311.4.6 Finishing: As compaction nears completion, the surface of the base course shall be shaped to required lines, grades and cross-section. When required, the surface shall be lightly scarified with spike tooth harrows or other approved equipment to remove imprints left by equipment or to prevent slippage planes. During the finishing process the surface shall be kept moist by means of fog-type sprays. Surface finish and final compaction shall be completed in not more than 2 hours from time of laydown. The completed base course shall be true to line, grade, cross-section and shall not vary more than ½ inch in thickness and not more than 1 inch in surface tolerance when tested with a 10 foot straight edge. It shall be free of surface cleavage planes, cracks, or loose material. As a final operation, the surface shall be very lightly scalped with a motor grader, wet with a fog spray and rolled with a pneumatic roller as directed by the Engineer.

311.4.7 Deficiency: When in the opinion of the Engineer there is reason to believe that a deficiency in thickness exists, cores will be taken in the same pattern as that defined in Section 321. If the base has been covered or it is otherwise impractical to correct the deficiency, the corrective measures, listed in Table 310-1 for Type I or II deficiencies, shall be taken by the Contractor at no additional cost to the Contracting Agency.

311.4.8 Curing: After completion of the final finishing process, the soil-cement shall be cured with a bituminous curing seal applied at the end of each construction day. This seal may be either an emulsion or cut-back asphalt applied at a minimum rate of 0.20 gal./sq. yd. The finished soil-cement shall be kept continuously moist until the bituminous cure seal is applied, using fog or gravity bar spray. The spray equipment shall be approved by the Engineer before construction is begun.

311.4.9 Construction Joints: At the end of each day's work, a construction joint shall be made transverse to the centerline of the road by cutting back into the work to provide a full depth vertical joint. Except where specifically authorized by the Engineer, no other construction joints will be permitted. Where authorized, such joints shall be full depth vertical joints.

311.4.10 Maintenance: The Contractor shall maintain the surface until it has been covered with the designated bituminous wearing course. In case it is necessary to replace any soil cement, it shall be for the full depth. No skin patches or soil cement will be permitted. Minor surface pits may be filled with compacted bituminous surfacing, if authorized by the Engineer. Immediately prior to the placing of the bituminous wearing course, the surface shall be broomed to removed all loosened material from the surface.

311.5 MEASUREMENT:

Measurement of soil cement will be the number of square yards constructed to the required depth, completed and accepted.

Measurement of portland cement will be the number of tons of cement mixed with local soil.

311.6 PAYMENT:

Payment will be made for the applicable items at the contract unit prices bid in the proposal, and shall constitute full payment for furnishing all material, equipment, tools, labor and incidentals necessary to complete the work and for carrying out the maintenance provisions.

No measurement or payment will be made for any imported earth materials.

End of Section

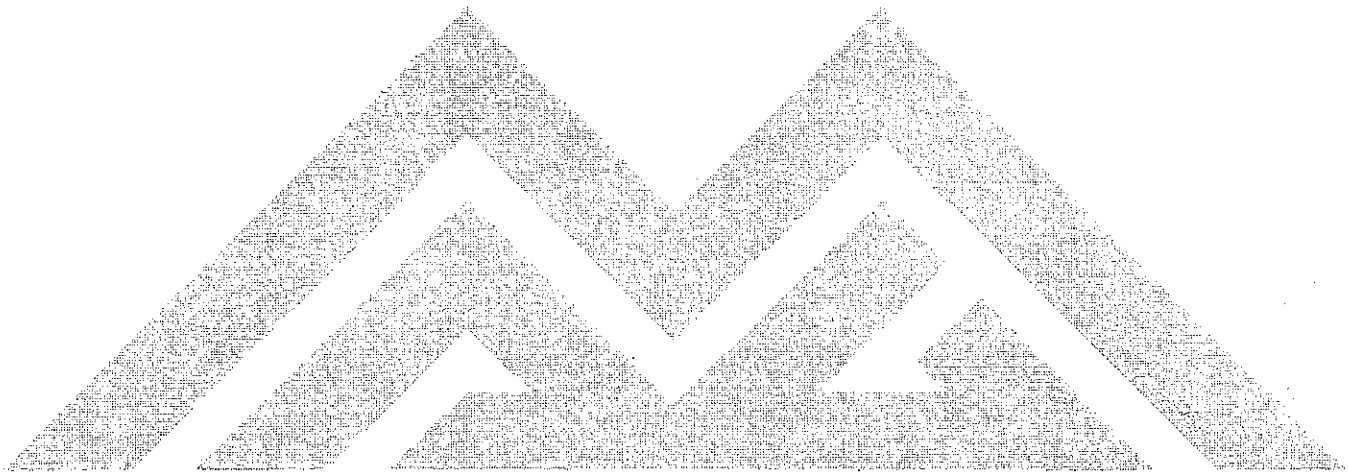

SECTION 312

CEMENT TREATED BASE

312.1 DESCRIPTION:

Cement treated base shall consist of a combination of base material as specified in Section 705 and portland cement.

312.2 GENERAL:

When the mixing of cement treated base in a stationary mixer is required, it will be so specified. Otherwise, cement treated base may be mixed in either a traveling plant or in a stationary plant, at the option of the Contractor.

If the cement treated aggregate is mixed in a central plant, it shall not contain moisture in excess of 1 percent above or below optimum at the time of delivery on the grade. Certain types of transit mixers will not discharge such material unless it is greatly in excess of optimum moisture. Use of such mixers will not be permitted.

If the material is mixed in place, the machine or combination of machines used shall be capable of thoroughly mixing the cement and aggregate, when using the granular material specified, in a single pass. No lift thickness shall exceed 8 inches. If the thickness required is in excess of 8 inches, it shall be mixed in 2 separate lifts of equal thickness.

312.3 CONSTRUCTION METHODS:

Mixing of materials, regardless of the type of mixer used or method employed, shall be continued until the cement and water are evenly distributed throughout the aggregate, and a mixture of uniform appearance is obtained.

The amount of cement used shall conform to requirements of Section 705. Cement delivered in standard sacks from commercial producers will be assumed to weigh 94 pounds per sack and need not be weighed. Bulk cement or fractional sacks of cement shall be weighed.

The amount of water used shall be that required to give optimum moisture content. A portion of the required water may be added to the aggregate prior to the addition of the cement, if approved.

After spreading, the cement treated base shall be compacted to a density of at least 95 percent of the maximum density as determined by AASHTO T-134, T-191, T-217 or ASTM D-558, D-2922, D-3017.

After compaction, the surface of the cement treated base course shall not deviate at any point more than ⅜ inch from the lower edge of a 10-foot straightedge laid parallel to the centerline of the roadway.

A construction joint shall be made at the end of each day's construction by trimming the end of the compacted mixture to a straight vertical plane, normal to the centerline of the roadway and with the vertical edge in thoroughly compacted material.

Cement shall not be added to more material than will be mixed, compacted and sealed the same day. Cement treated base shall not be mixed or placed when either the aggregate or subgrade is frozen. The air temperature shall be at least 40°F. in the shade and rising at the time of mixing.

In areas which are inaccessible to the mixing, spreading or compacting equipment designated herein, other methods and equipment acceptable to the Engineer may be utilized.
The mixed material shall not remain undisturbed on the subgrade for more than 30 minutes and not more than 3 hours shall elapse between the time water is added to the mixture and final compaction is accomplished.

The mixed materials shall be spread for the full width of the base under construction, either by one spreader or by several spreaders operating in a staggered position across the subgrade, unless permission is granted to do part-width construction. Should permission be granted for part-width construction, not more than 30 minutes shall elapse between the times of placing the material in adjacent lanes at any location, and the longitudinal joint against which additional mixed material is to be placed shall be trimmed to a straight vertical plane parallel to the centerline of the roadway. Trimming shall be done in such a manner as to cause the least possible loosening of the compacted base material and to leave no loose material on the subgrade. The

material cut away in trimming may be used in the construction of the shoulders or the adjacent lanes if approved, or shall be disposed of in a satisfactory manner.

During mixing, spreading and compacting and until the application of the curing seal, any moisture lost by evaporation shall be replaced by the addition of water by means of a light fog or fine spray.

The mixed base materials shall be covered as soon as possible after final compaction and shall be cured in accordance with this specification.

312.4 TRAVELING PLANT MIXING:

312.4.1 Placing Aggregate: The aggregate to be treated shall be placed on the roadway either as a uniform layer which, when compacted, will produce a base of the depth and width shown on the plans or as one or more windrows which, when spread, will yield a uniform layer which will compact to the prescribed dimensions. If the aggregate is placed in one or more windrows, a windrow sizer will be required. The number and size of the windrows may vary, depending on the width and depth of treatment and on the capacity of the machine, but regardless of size, the windrow shall be uniform in cross-section and shall not be larger than can be handled by the plant.

Care shall be exercised during the placement of the aggregate to prevent segregation of the fine and coarse portion of the aggregate.

312.4.2 Placing Cement: Cement shall be added to the uniform layer or windrow of aggregate by means of mechanized equipment which will spread the cement in correct and uniform quantities. For any section of roadway, the quantity of cement placed by mechanical spreaders shall not deviate more than 10 percent from the computed quantity for the section. When cement is applied to a windrow, the top of the windrow shall be slightly trenched to retain the spread of cement.

If storm winds cause a loss of spread cement, spreading operations shall be halted until such winds subside and, at the first indication of losses, prompt action shall be taken to avoid further losses. If cement losses are deemed excessive, the deficient quantity shall be furnished and added in the proper amount by the Contractor at no additional cost to the Contracting Agency.

312.4.3 Mixing: Mixing shall be accomplished by means of an approved single pass traveling continuous mixing machine, or combination of machines, of the pug or auger type. The machine shall be so constructed that the device for picking up or mixing the aggregate can be controlled and during the mixing operations it shall be set to mix the aggregate, cement and water to the design depth without cutting into or disturbing the subgrade or picking up any material other than that material to be processed. The machine shall be equipped so that water may be introduced at the time of mixing through a metering device which will accurately and uniformly control and measure the amount of water being used.

The cement and aggregate shall be mixed in the machine simultaneously with the adding, through the machine, of the additional amount of water required.

The material shall be spread immediately after mixing, in reasonably close conformity to the lines, grades and dimensions established or shown on the plans.

312.4.4 Stationary Plant Mixing: If the stationary plant method of mixing is employed, the aggregate, cement and water shall be mixed at a central plant using either a batch pug mill type or a continuous type mixer. Dead areas in the mixer, in which the material does not move or is not sufficiently agitated, shall be corrected, either by a reduction in the weight of materials or by other adjustments.

312.4.5 Batch Mixing: If a batch pug mill type mixer is used, the aggregate and cement shall be proportioned by batch weights. Cement shall be weighed on separate scales from the aggregate batching scales.

The weight of the charge in a batch mixer shall not exceed that which will permit complete mixing of all materials. The period of mixing shall not be less than 30 seconds from the time all materials are in the mixer. Water may be proportioned by volume or by weight.

312.4.6 Continuous Mixing: If a continuous type mixer is used, the materials shall be proportioned by volume.

The continuous type mixer shall be equipped with metering devices and feeders which will introduce the cement, aggregate and water into the mixer in the specified proportions. The water pump shall be equipped with a means of varying the rate of delivery. The metering devices and feeders shall be interlocked and so synchronized as to maintain a constant ratio of cement and water to the aggregate.

The rate of feed to a continuous type mixer shall not exceed that which will permit complete mixing of all the material.

312.4.7 Spreading: The treated material shall be transported from the plant to the prepared subgrade in approved equipment.

The surface on which the material is to be placed shall be thoroughly moistened and kept moist, but not excessively wet, until covered by the material.

Plant mixed cement treated base shall be spread by approved spreader boxes or finishing machines. The machines shall be constructed and operated so as to produce a layer of uniform density and cross-section an in sufficient quantity to provide a compacted base reasonably conforming to the lines, grades and cross-sections established or shown on the plans.

312.4.8 Compacting: Initial compaction shall begin immediately after mixing and spreading. Successive passes of compacting equipment shall overlap the previous adjacent pass by at least 25 percent of its width. Following initial compaction and before final compaction, the treated material shall be bladed with a motor grader or a planing machine to obtain a surface reasonably true to the lines, grades and cross-sections established or shown on the plans. During and immediately following the shaping operations, if required, the Contractor shall lightly scarify the surface with a nail drag or other approved equipment to prevent the formation of surface compaction planes.

Extreme care shall be exercised by the Contractor during the blading operation so that no more material than is necessary is disturbed and so that this operation can be completed as quickly as possible. Material thus cut shall be wasted if so directed. Compaction shall proceed without interruption, except as stated above, until the required degree of compaction is obtained.

312.5 INVERTED SECTION:

Where the cement treated base is to be covered with an aggregate base material to prevent shrinkage crack reflection and overloading of the cement treated base, the minimum thickness of the aggregate base shall be 4 inches, unless otherwise specified in the special provisions. In order to provide for free internal drainage of the aggregate base course overlaying the cement treated material, it shall be non-plastic and the percentage of material passing the No. 200 sieve shall not exceed 8. The cement treatment shall be held back approximately 1 foot from each curb line so as to permit drainage of any water that may become trapped between the cement treated base material and the bituminous surfacing.

312.6 CURING:

The mixed cement treated base materials shall be covered as soon as possible after final compaction with a bituminous curing seal. Application shall be by means of a pressure distributor in accordance with the requirements of Section 330. The approximate quantity of bituminous material to be used shall be as specified; however, the exact amount will be determined by the Engineer at the time of application.

After the bituminous curing seal has been applied, the cement treated base course shall be kept free of equipment and traffic for a period of at least 7 days or until it will not pick up under traffic. Curing seal shall conform to the requirement of Section 712 or 713 for the type specified.

In lieu of the curing seal, the Contractor may, at his option, keep the surface of the compacted base continuously moist until overlaid with the aggregate base course. The aggregate base or the surfacing, may be placed as soon as the cement treated base has been compacted. The spray equipment on the water truck shall be approved by the Engineer prior to the use of this equipment to spray the soil cement base course. The spray equipment must produce a fine, even spray to prevent washing of the surface of the base course. A cement treated section may be opened to all traffic immediately after placement and compaction of the surfacing.

312.7 DEFICIENCY:

When, in the opinion of the Engineer, there is reason to believe that a deficiency in thickness exists in the cement treated base, cores will be taken in the same pattern as that defined in Section 321. If the base has been covered or it is otherwise impractical to correct the deficiency of ½ inch or more in thickness, the corrective measure listed in Table 310-1 for Type II deficiency shall be taken by the Contractor at no additional cost to the Contracting Agency.

312.8 PAYMENT:

Payment for the portland cement will be made by the tons of cement complete in place.

Payment for base material will be made by the tons of aggregate complete in place including mixing, spreading, and compacting.

No separate payment will be made for curing.

End of Section

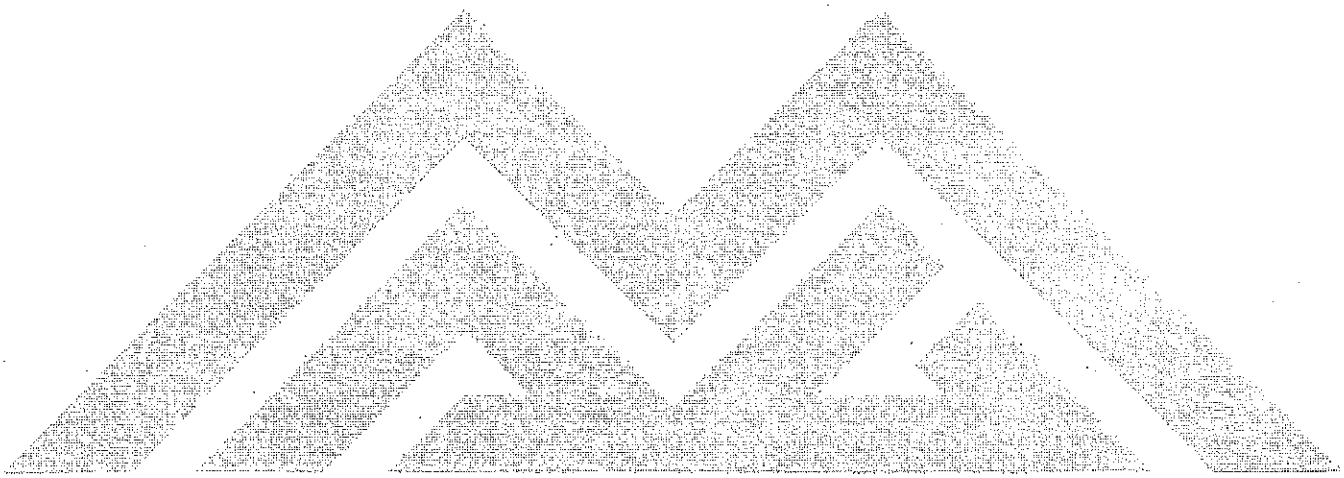

SECTION 313

BITUMINOUS TREATED BASE COURSE

313.1 DESCRIPTION:

Bituminous treated base course shall consist of a mixture of aggregate and emulsified or liquid asphalt.

313.2 AGGREGATES:

The aggregates shall consist of soil or mineral aggregates, or blends thereof, which, when stabilized and allowed to cure, will meet the requirements specified in the special provisions. The Contractor shall notify the Engineer if he intends to import material, in sufficient time to allow for the testing thereof to determine the suitability of the material and quantity and stabilizer required.

313.3 ADVANCE TESTS:

When mixing is to be done on the site, a representative sample of the aggregates shall be taken from each 10,000 square feet to be stabilized. When mixing is done in a central mixing plant, samples which are representative of the aggregate to be used, shall be taken for tests.

The stabilizer and aggregates for the work shall meet the requirements of the special provisions. The quantity of stabilizer shall be as specified. In the case of emulsified asphalt, the Engineer will determine the quantity of water to be added.

313.3.1 Application of Emulsified or Liquid Asphalt:

(A) The addition of emulsified asphalt shall not be made when the aggregate contains more than 4 percent moisture.

(B) The addition of liquid asphalt shall not be made when the aggregate contains more than 2 percent moisture.

In special cases, when the aggregate is unusually porous, a moisture content in excess of the above may be permitted at the discretion of the Engineer, when laboratory tests indicate that such increased moisture content will not produce an unstable mixture.

313.4 MIXING:

The aggregate and asphalt shall be thoroughly mixed in a central pug mill type mixing plant, or on the roadbed by traveling mixer or blade method. The mixture shall be uniform and contain the percent, by weight or volume of dry aggregate and asphalt as specified. If necessary, water shall be added to the aggregate in a quantity sufficient to completely disperse the emulsified asphalt and produce a plastic mixture free from balled fines or balled asphalt.

313.4.1 Central Plant Mixing: The aggregate and asphalt shall be mixed in a pug mill. Material shall be weighed and mixed in such proportions that the combined aggregates shall meet the grading limits specified.

The asphalt shall be added to the weighed aggregate in the mixer. Additional water, when needed, shall be added simultaneously with emulsified asphalt. Mixing shall continue until the asphalt is uniformly and thoroughly distributed throughout the mass. The minimum mixing time shall be 35 seconds.

313.4.2 Travel Mixing: The traveling mixing machine shall be of the pug type or auger type. The traveling mixer shall have provision for introducing the asphalt and water at the time of mixing through a metering device or other approved method. Both the asphalt and the water shall be applied by means of separate controls which will supply a uniform ratio of asphalt and/or water to the amount of aggregate passing through the mixer, and produce a complete mixture with a uniform moisture content. The controls shall be mechanically synchronized with the forward movement of the mixer. Leakage of asphalt and/or water from equipment will not be permitted and care shall be exercised to avoid the addition of asphalt or water by spilling or any other means not under the control of the Engineer.

Prior to mixing in the traveling mixer, the aggregate shall be placed in such a manner that all the material will be passed through the mixing machine in one mixing operation. If aggregate is brought to the site in separate sizes, each of the sizes in proper amount shall be deposited by means of approved spreading device equipped with a readily adjustable strike off device.

The rate of movement of the mixing machine, the amount of material mixed, and the number of passes shall be so regulated that a mix satisfactory to the Engineer will result. The material shall be mixed so that a uniform mixture of unchanging appearance is obtained and all particles of aggregate are coated with asphalt.

313.4.3 Blade Mixing: Unless otherwise permitted by the Engineer, the aggregate shall be thoroughly blended with the necessary additional water with a blade grader and uniformly spread over the site preparatory to application of the asphalt. Asphalt shall be spread by an approved pressure distributor in the number of applications directed by the Engineer. After each application, the aggregate shall be mixed. As needed, additional water shall be added by pressure distributor in the amount directed by the Engineer. After the final application, the material shall be bladed into a windrow and the windrow bladed back and forth across the site with a heavy blade grader having a wheelbase not less than 16 feet long, until a satisfactory mixture of uniform and unchanging appearance has been obtained. After having been mixed and deposited in the final windrow, the mixture shall not be allowed to remain in the windrow for more than 24 hours unless otherwise permitted by the Engineer. Mixing equipment must be of a type and in good working condition as approved by the Engineer. The maximum lift for mixing and laying by blade mix methods shall not exceed 1 cubic yard per running foot.

313.5 PLACING THE MIXTURE:

The mixed base material shall be laid and rolled to the thickness shown on the plans in layers not to exceed 4 inches in compacted thickness.

If the aggregate and asphalt have been mixed in a central mixing plant, the treated base material shall be transported to the site in trucks and spread. Dumping in piles on the subgrade will not be permitted. If necessary, spreading shall be completed by blading the mixture to proper cross-section with a self-propelled pneumatic-tired blade grader. An approved spreading, screeding, and tamping machine may be used.

313.6 COMPACTING THE MIXTURE:

Rolling of the mixture shall commence immediately after it has been placed on the subgrade.

After the specified compaction has been secured in the top layer with the pneumatic-tired rollers, the roadway shall be thoroughly rolled with self-propelled tandem rollers with smooth steel wheels.

Each base course layer shall be rolled until it is compacted and true to grade and cross-section.

Areas inaccessible to the roller shall be compacted by power tamping to the same density as the rolled portion.

The surface of each layer shall be free of foreign material prior to placing the succeeding layer of material.

313.7 FLUSH SEAL:

After the top layer is compacted, cleaned and dried to the percent of moisture required, the surface shall be given a light uniform application of emulsified asphalt. It shall be mixed and applied in accordance with Section 333. After the seal has dried, the base shall be ready for final pavement surface.

313.8 DENSITY AND TOLERANCES:

Rolling shall be continued until at least 100 percent relative density is obtained as per AASHTO T-99, Method A, and T-191 or ASTM D-2922 and D-3017. The thickness of stabilized base compacted in place may deviate not more than ± ½ inch from that specified. The surface shall not show any deviation in excess of ¼ inch when tested with a 10 foot straightedge applied parallel with the center line of the roadway.

313.9 DEFICIENCY:

When in the opinion of the Engineer there is reason to believe that a deficiency in thickness exists, cores will be taken in the same pattern as that defined in Section 321.

If the base has been covered or it is otherwise impractical to correct the deficiency, the corrective measures, listed in Table 310-1 for Type I or II deficiencies, shall be taken by the Contractor at no additional cost to the Contracting Agency.

313.10 MEASUREMENT:

Bituminous treated base course will be measured by the ton or square yard. Measurement by the ton will include imported materials and asphalts. Certified weight slips of all materials shall be delivered to the Engineer before the materials are applied. Measurements for determining the square yard area will be made horizontally unless otherwise specified.

313.11 PAYMENT:

The price bid per ton or square yard for work covered by this section shall include full compensation for all labor, material, and equipment required for the construction complete in place, of bituminous treated base course.

End of Section

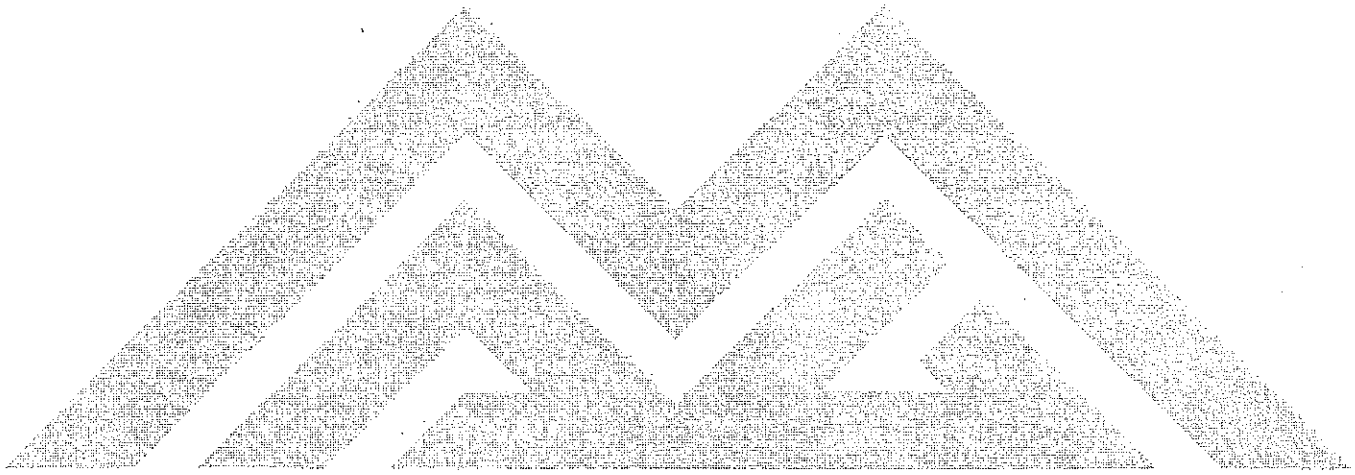

SECTION 315

BITUMINOUS PRIME COAT

315.1 DESCRIPTION:

Bituminous prime coat shall consist of furnishing bituminous material and applying this bituminous material to a prepared base course, in accordance with these specifications.

315.2 MATERIALS:

Bituminous material shall conform to the requirements of Section 712 for the type and grade specified.

315.3 CONSTRUCTION METHODS:

315.3.1 Preparation of Surface: The surface on which the bituminous prime coat is to be placed shall be uniformly smooth and firm and reasonably true to grades and cross-sections as shown on the plans, and shall be so maintained throughout the period of placing the prime coat. In no event shall a prime coat be placed on a soft, uneven base. Any holes, depressions or irregularities shall be repaired by the removal of all loose and unsuitable material and replacement by suitable material, which shall be compacted to produce a dense surface conforming to the adjacent area. Uniformity of surface texture is of the utmost importance.

When required, the surface on which the prime coat is to be placed shall be lightly bladed and rolled immediately prior to the application of bituminous material.

315.3.2 Application of Bituminous Material: Bituminous material shall be applied only when the surface is either slightly damp or dry. For extremely dry areas, a light application of water may be required prior to the application of bituminous material.

The approximate quantity of bituminous material to be used will be specified; however, the exact amount used will be determined by the Engineer at the time of application. The bituminous material shall be uniformly applied to the prepared surface at the rate so designated and in one application.

The application of bituminous material and distributing equipment shall conform to the requirements of Section 330.

When it is deemed necessary, areas having excess bituminous material shall be blotted with material as directed.

When so directed, the surface of the complete prime coat shall be rolled with a pneumatic-tired roller.

313.3.3 Maintenance of Surface: Traffic shall be kept off the bituminous material until it has penetrated the base or subgrade and cured sufficiently.

The integrity of the prime coat shall be maintained at all times until the next course is placed or until the final acceptance. In the event traffic has caused holes or breaks in the surface, such holes or breaks shall be satisfactorily repaired by the Contractor.

315.4 MEASUREMENT:

The accepted quantities of bituminous material for bituminous prime coat will be measured by the ton undiluted for the bituminous material used.

No measurement or direct payment will be made for rolling.

Materials necessary for repair of holes or breaks in the surface after the prime coat has been accepted, when such holes or breaks are caused by traffic other than that of the Contractor, will be measured for payment under the respective contract item for the materials used.

315.5 PAYMENT:

Payment for the bituminous material will be on the basis of the price bid per ton, undiluted, complete in place.

Payment for furnishing, applying and removing blotter material will be paid for as an extra work item.

End of Section

SECTION 320

ROAD-MIXED SURFACING

320.1 DESCRIPTION:

Road-mixed surfacing shall consist of a mixture of mineral aggregate and bituminous binder mixed on the roadbed or other area, spread and compacted on a prepared subgrade or base course in conformity with the lines, grades, and dimensions shown on the plans or typical cross-section, or as specified in the special provisions.

320.2 MATERIALS:

Materials shall conform to the requirements of Sections 710 and 712 for the type and grade specified on the special provisions.

320.3 PRIME COAT:

When a prime coat is required, it shall be applied as specified in Section 315.

320.4 SPREADING AGGREGATE:

The mineral aggregate shall be deposited in a windrow along one side of the roadbed by means of approved spreader box equipped with a readily adjustable strike off device or other suitable equipment. The maximum lift for blade mixing and laying shall not exceed 1 cubic yard per running foot. If the mineral aggregate is delivered to the roadbed in separate sizes, each size of aggregate shall be spread in a windrow of the required quantity for that size of material, after which the windrows of various sizes shall be blended into one windrow alongside of the roadbed.

The aggregate shall be so spread that the windrows will be uniform and equal in size and will contain the proper quantity of material to provide surfacing of the required width and thickness. Care shall be exercised to prevent the aggregate from becoming mixed with earth or shoulder material. Preparatory to applying the liquid asphalt, a portion of the material from the windrow shall be spread uniformly over ½ with width of the roadbed.

Unless permitted by the Engineer, no more aggregate shall be spread on any one day than can be mixed with liquid asphalt within 72 hours. If traffic conditions require, the Engineer may require spread or flattened windrows.

320.5 APPLICATION OF LIQUID ASPHALT:

The temperature of the liquid asphalt, when applied, shall be in accordance with Section 712, and 16 to 22 gallons shall be applied for each cubic yard of road-mix material, in not less than 2 approximately equal applications.

Unless otherwise approved by the Engineer, no liquid asphalt shall be spread when weather conditions are unsuitable, or when the moisture content of the mineral aggregate exceeds 3 percent by weight of the dry aggregate. When the aggregate is unusually porous, the permissible moisture content may be increased and liquid asphalt spread at the discretion of the Engineer, when laboratory tests indicate that such increased moisture content will not produce an unstable mixture.

Liquid asphalt shall be prevented from spraying upon adjacent pavements, structure, guard rails, guide posts, culvert markers, trees and shrubbery, adjacent property and improvements, and other highway improvements or facilities not specifically mentioned herein, or that portion of the traveled way being used by traffic.

320.6 MIXING:

Immediately following each successive application of liquid asphalt, the surfacing material shall be thoroughly mixed by means of a blade. After the final application, the material shall be bladed into a windrow and the windrow bladed back and forth between the center and the edge of the area to be surfaced with a heavy blade grader having a wheel base not less than 16 feet long, until a satisfactory mixture of uniform appearance is obtained.

Should the mixture show an excess or deficiency of liquid asphalt, or uneven distribution thereof, prior to spreading and compacting, the condition shall be corrected by adding mineral aggregate or liquid asphalt, as the need may be, and remixing the material to produce a satisfactory mixture. If necessary, all compressed masses of material shall be broken up.

After mixing, the material shall be placed in a windrow prior to spreading.

After the material has been mixed as above specified all of the mixed material shall be bladed into a single windrow in the center of the roadbed and the entire mass of treated material turned not less than 4 complete times by blading first to one side of the road and then to the other.

In lieu of mixing the material as above specified, a road-mixing machine or any equipment other than that required above may be employed which will produce a completed mixture equal to that which would be produced by means above specified. The Engineer reserves the right to order the use of any equipment discontinued which, in his opinion, fails to produce a satisfactory mixture.

Road-mixing machines shall be of the pug mill or auger type or other suitable equipment capable of picking up the loosened material completely from the roadbed, leaving practically no loose material on the ground, and which will introduce the liquid asphalt through a metering device at the time of mixing. The machine shall be equipped with the positive control of the amount of liquid asphalt introduced into the mix which can be readily adjusted to changes in grading of the road material.

The rate of movement of the machine along the roadway, the amount of material mixed and the amount of mixing shall be so regulated that a uniform mixture of unchanging appearance is obtained and all particles of aggregate are thoroughly coated with liquid asphalt. Before mixing on the roadbed the loosened material shall be placed in windrows or in a blanket of uniform cross-section and of such size that all the material in the windrow or blanket can be passed through the mixing machine at each mixing operation. Sufficient material, as determined by the Engineer, shall be placed in windrows or in a blanket in advance of mixing.

No mixed material shall be spread and compacted until the mixture has been approved by the Engineer.

The amount of material mixed on any one day shall not be more than can be spread and compacted on the following day, except that when directed by the Engineer mixed material shall remain in the windrow for a longer period.

Mixing the liquid asphalt with the mineral aggregate prior to delivery on the roadbed will be permitted, provided that the complete mixture is uniform in character and the same consistency with respect to grading, asphalt content and moisture as that specified for road-mixing.

Liquid asphalt added to mineral aggregate at a central mixing plant shall be accurately weighed by means of dial scales or other approved weighing devices. Liquid asphalt added to mineral aggregate in a traveling mixing plant shall be accurately measured by means of meters or other approved measuring device. Weighing or measuring liquid asphalt being added to mineral aggregate at mixing plants in accordance with the above specified methods shall be for the purpose of properly proportioning the material and not for determining the pay quantities of liquid asphalt.

320.7 SPREADING AND COMPACTION:

Spreading shall be in increments not exceeding 1 inch in thickness.

Rolling shall be continuous throughout the spreading operations until all the loose material has been laid and consolidated.

Segregation of coarse or fine particles shall be avoided and the surfacing as spread shall be free from lumps or pockets of coarse or fine material. Segregated materials or lumps shall be remixed by blading.

After spreading on the roadbed, should the moisture content of the mixture exceed 3 percent it shall be reduced by blading and reblading the mixture and allowing it to dry before the final spreading. Should blading and reblading of the mixture fail to reduce the moisture content below that above specified, the mixture shall be scarified, turned and respread until the moisture content does not exceed 3 percent by weight of the dry aggregate, with the exception, however, that in certain special cases, when the mineral aggregate is unusually porous the permissible moisture content may be increased at the discretion of the Engineer, when laboratory tests indicate that such increase will not result in an unstable mixture.

During blading and rolling, all lumps or compressed masses of the mixture shall be remixed and again rolled. On completion of the blading operations all loose stones shall be swept to the outside of the surfaced area and incorporated with the shoulder material or picked up and disposed of.

The edges of the completed surfacing shall be trimmed uniformly to the required cross-section and width before the shoulders are finally rolled and shaped.

The completed surface, when ready for acceptance, shall be thoroughly compacted, smooth and even, true to grade and cross-section, and free from ruts, humps, depressions, or irregularities. When a 10 foot straightedge is laid on the finished surface and parallel with the center line of the road, the surface shall vary in no place more than ⅛ inch from the lower edge of the straightedge.

Should pneumatic-tired roller be used, the final finishing shall be done with a tandem roller. Sufficient blading and rolling equipment shall be furnished.

Where shown on the plans or specified in the special provisions, road-mixed material shall be placed and compacted around spillway assemblies, drop inlets and manholes outside the area to be surfaced, upon road approaches and connections, over gutter, ditch and dike areas, and over other areas, to the thickness shown on the plans or ordered by the Engineer.

At locations where the surfacing is to be placed over areas inaccessible to the required spreading and compacting equipment or over areas where the use of required spreading and compacting equipment would be impractical, the mixed material may be spread and compacted by other methods when approved or so ordered by the Engineer. Road-mixed surfacing placed on road approaches and connections shall be placed to the thickness and as specified for surfacing to be placed on the roadbed.

After final rolling the finished surface course shall have a density of at least 92 percent of the theoretical maximum density possible to obtain with the same materials in like proportions when computed without voids by specific gravity tests.

320.8 MEASUREMENT:

Measurements for determining the area to be paid for will be made horizontally unless otherwise specified.

320.9 PAYMENT:

Payment for road-mixed surfacing will be made on the basis of the price bid per square yard unless an alternate basis of payment is provided in the proposal. The price bid per square yard shall include the furnishing of all labor, materials, tools, compaction, asphalt and the dressing of the subgrade, or base course necessary to complete the work. Prime coat, when required, will be paid for by the ton, undiluted, complete in place.

End of Section

SECTION 321

ASPHALT CONCRETE PAVEMENT

321.1 DESCRIPTION:

This item shall consist of leveling, surface and/or base courses and curbs placed upon the previously prepared base or subgrade in accordance with these specifications to the compacted thickness and design shown on the plans or ordered in writing by the Engineer.

321.2 MATERIALS AND MANUFACTURE:

Materials and manufacture shall conform with Section 710 for the type specified.

321.3 WEATHER AND MOISTURE CONDITIONS:

Asphalt concrete shall be placed only when the surface is dry, and when the atmospheric temperature in the shade is 40°F. or above. No asphalt concrete shall be placed when the weather is foggy or rainy, or when the base on which the material is to be placed contains moisture in excess of the optimum. Asphalt concrete shall be placed only when the Engineer determines that weather conditions are suitable.

321.4 APPLICATION OF TACK COAT:

A tack coat shall be applied to all existing and to each new course of bituminous surfaces prior to the placing of a succeeding layer of bituminous mixed material. The tack coat may be deleted when a succeeding layer of asphalt concrete is being applied over a freshly laid course that has been subjected to very little traffic when approved by the Engineer.

The application of the tack coat shall comply with Section 329. The grade of emulsified asphalt shall be SS-1 h as specified in Section 713.

The same material that is specified above for the tack coat shall be applied to the vertical surfaces of existing pavements, curbs, and gutters, against which asphalt concrete is to be placed.

The surface to be covered may require repair or patching as directed by the Engineer.

321.5 PLACING, SPREADING, AND FINISHING:

Asphalt concrete shall be delivered and placed at a temperature within the job mix formula limits specified in Section 710. Tarpaulins shall be furnished and used to cover all loads during transportation if the temperature of the mixture is below the job mix formula limits specified in Section 710. The temperature shall be taken at a point 6 inch below the exposed surface of the material, in the truck, on the job site, and just prior to placement. No free fluid shall be present in the truck bodies at the time of asphalt concrete loading. Diesel fuel shall not be used as a treating fluid.

The handling of the completed mixture shall at all times be such as to prevent segregation, and the material as spread shall be free from areas of excess coarse, or fine material. Float rock developed in the process of raking shall be placed on an underlying course or otherwise disposed of. In no case shall it be scattered over the surface of a final course.

Placing shall begin on pavement at points farthest from the source of supply, and progress continuously toward the source of supply, unless otherwise ordered by the Engineer, and no more than ½ day's delivery to the project shall be placed in any one lane in advance of the other lanes. The end of each lane shall be staggered in relation to the adjacent lane.

At locations where the mixture is to be placed over areas inaccessible to the required spreading or compacting equipment or over areas where the use of the required spreading and compacting equipment would not be practicable, the mixture may be spread or compacted by other methods as approved by the Engineer.

321.5.1 Base Preparation: The base prepared by the Contractor, on which the asphalt concrete is to be placed, shall be smooth, firm, and true to grade and cross-section as shown on the plans, and shall be so maintained throughout the period of placing asphalt concrete. If necessary, in order to obtain the above specified base condition, and if ordered by the Engineer, a leveling course of asphalt concrete compacted in layers not exceeding 2 inches in thickness or aggregate base shall be spread to level irregularities such as dips, depressions, and sags. All irregularities such as humps or high spots shall be removed in order to provide a smooth base of uniform grade and cross-section, so that subsequent surfacing will be of uniform thickness.

No additional compensation will be allowed for furnishing and placing these materials, and full compensation for all materials and for all work incidental to the correcting of irregularities will be considered as included in the contract price for asphalt concrete.

Pavement termination per Detail 201, type A or B, shall be installed on all street edges where no other curb or retainment has been installed. This will include but not be limited to the center line of half streets, diagonal or perpendicular end terminations, street edges without curb and gutter or single curb.

321.5.2(A) Spreading and Finishing Equipment: Self-propelled mechanical spreading and finishing equipment shall be provided with a screed or strike off assembly capable of distributing not less than the full width of a traffic lane. The term screed includes any strike off device operating by cutting, crowding, or other practical action which is effective on mixtures at workable temperatures without tearing, shoving, or gouging, and which will produce a finished surface of the smoothness and texture required. The screed shall be adjustable to the required template and elevation. The forward speed of operation of self-propelled mechanical spreading and finishing equipment shall be so regulated that no irregularities will result in the surface texture or smoothness of the mat due to excessive forward speed of the spreading machine. The forward speed of operation shall not exceed 55 feet per minute unless the contractor can demonstrate to the satisfaction of the Engineer that higher speeds will not affect the smoothness of the mat.

Self-propelled mechanical spreading and finishing equipment shall be equipped with a control system capable of automatically maintaining the screed elevation as specified herein.

The control system shall be automatically actuated from either a reference line or surface through a system of mechanical sensors or sensor directed mechanisms or devices which will maintain the paver screed at a predetermined transverse slope and at the proper elevation to obtain the required surface. When directed, the transverse slope control system shall be made inoperative and the screed shall be controlled by sensor directed automatic mechanisms which will independently control the elevation of each end of the screed from reference lines or surfaces.

The controls shall be capable of working in conjunction with any of the following attachments:

(A) Ski-type device of not less than 30 feet in length.
(B) Taut stringline or wire set to grade.
(C) Short ski or shoe.

The Contractor shall furnish all necessary equipment to perform the paving operation including a long ski or shoe and all required stakes and wire. Should the automatic control system become inoperative during the day's, work, the Contractor may be permitted to place the remaining material on site using manual controls; however, no further material shall be delivered to the project site, and work shall not be resumed thereafter until the automatic control system has been made operative.

In conditions where the curb and/or gutter is not even and true to grade, the Engineer may require the Contractor to use a ski-type device or stringline as described in A or B above to establish the grade of the asphalt concrete surface adjacent to the curb or gutter.

When trucks are backed into the paver, it shall be in such a manner that the paver will not be jarred excessively or moved out of line and the trucks shall be securely attached to the paver during spreading and finishing.

When the Engineer deems that the automatic screed control operation is not practical under a particular set of conditions, he/she may order the use of manual control in lieu thereof. However, the machine shall be equipped with the automatic device.

Use of the spreader boxes will be permitted by the Engineer only in writing, under certain conditions, such as in alleys and on narrow paving projects where it is not practical to use a lay down machine. The spreader box will be equipped with a readily adjustable strike off blade. In order to obtain a smooth surface manipulation of the controls of the spreader box shall be held to a minimum. Trucks shall be backed into the spreader box in such a manner that the box will not jarred excessively or moved out of line and the trucks shall be securely attached to the spreading and finishing.

If approved in writing by the Engineer, asphalt base course material may be placed with a self propelled pneumatic tired blade grader equipped with an automatic leveling device capable of accurately maintaining transverse slope of the blade at a preset angle. The grader shall have a blade not less than 12 feet long. Motor graders shall be free from appreciable lost motion in the blade control.

321.5.2(B) Compaction Equipment: All rollers used in compaction of asphalt concrete shall be self-propelled and reversible, with a minimum weight of 8 tons. All rollers shall be maintained to insure smooth operation in respect to steering, the ability to stop, start and reverse. All rollers shall be equipped with an automatic device or devices capable of properly dispensing an approved releasing agent on the wheels to prevent the wheels from picking up the asphalt concrete. Diesel fuel shall not be used as a releasing agent. All rollers shall be equipped with scrapers to keep the wheels clean from asphalt and other debris.

Pneumatic-tired rollers shall be of the 2 axle tandem type, having a rolling width of not less than 5 feet. All tires shall not be less than 20 inches in diameter, shall be of the same size and shall have treads satisfactory to the Engineer. The roller shall be so constructed that the operating weight per tire shall not be less than 2000 pounds and the tires shall be spaced so that the entire gap between adjacent tires will be covered by the tread of the following tire. Except as otherwise specified, each tire shall be inflated to 90 psi and at all times the air pressure in each tire shall not vary more than 5 psi from the specified pressure. Pneumatic-tired rollers shall be equipped with skirt-type devices mounted around the tires so that the temperature of the tires will be maintained during the rolling process.

Steel-wheeled tandem rollers or vibratory rollers may be used where applicable. In all cases, the larger of the two roller wheels will be operated in the forward position. The steel wheels shall be straight, free from grooves and/or pits. Vibratory rollers shall be operated in accordance with standard practices and manufacturer recommendations.

321.5.3 Leveling Course: A leveling course shall be used when specified, or as directed in writing by the Engineer, to bring existing pavement to a uniform grade prior to placing an overlay or other course.

After the prime coat or tack coat has been applied, the leveling course mixture shall be spread to the proper width and to such depth as will compact to the required thickness. Actual quantities of the mixture required will be determined by the Engineer.

The distance to which a leveling course may be spread in advance of covering it with the following course shall be as ordered by the Engineer.

The leveling course material shall be placed in layers, 2 inches maximum compacted thickness, prior to finishing by means of self-propelled spreading equipment, spreader box or motor graders as discussed above. Other means may be permitted for placing the leveling course provided the method, at the discretion of the Engineer, can provide a finish surface that does not vary from the design surface by more than the amount specified below. In order to obtain a smooth surface, manipulation of controls of the paver shall be at a minimum. Unless otherwise permitted by the Engineer, adjustments shall not be made on less than 50 feet intervals and any adjustment shall not result in a change in thickness of the pavement in excess of 1/8 inch. Except where the machine is equipped with electronic grade controls.

The placing of the leveling course shall be not less than one lane width and for the longest practical length for any one lay, preferably not less than 1200 feet. The exact width and length will be approved by the Engineer.

Rolling shall be accomplished by use of a pneumatic-tired roller, and shall proceed concurrently with the laydown of the leveling course. During the rolling operation, the speed of the roller shall not exceed 3 miles per hour. Additional rollers may be required depending on the placement rate of the asphalt concrete. If ample number of rollers are not present, the contractor shall adjust the placement rate to accommodate the roller speed.

The leveling course shall be thoroughly compacted, smooth and true to grade and cross-section and free from ruts, humps, depressions or irregularities. An acceptable surface shall not vary more than ½ inch from the lower edge of a 25 foot straightedge when the straightedge is placed parallel the centerline of the roadway. The straightedge shall be furnished by the Contractor and shall be constructed of such lightweight materials that it can be handled by the inspector without assistance.

When deviations in excess of the above tolerance are found, such places as humps; or depressions shall be corrected to meet the specified tolerance. All labor and equipment necessary to correct such deviations shall be at no additional cost to the Contracting Agency. Adjustment in the cost for the material may be requested by either the Contracting Agency or Contractor depending on the type of deviation.

321.5.4 Asphalt Base and Surface Course: Asphalt base and surface courses shall be spread and finished by means of self-propelled mechanical spreading and finishing equipment as described and specified above, except as otherwise noted. The compacted thickness of layers placed shall not exceed 4 inches for base course or 2 inches for surface course except as otherwise provided in the plans and specifications, or if approved in writing by the Engineer.

When more than one course is placed, longitudinal joints of each course shall be staggered not less than 6 inches with relation to the longitudinal joints of the underlying course.

Before a surface course in placed adjacent to cold transverse construction joints, such joints shall be trimmed to a vertical face by cutting the material back for its full depth so as to expose a fresh surface. The joint shall be cut on a 10 to 15 degree skew from a line perpendicular to the center line of the street or roadway. The joint formed when the fresh mixture is placed shall be dense and well sealed. The transverse surface joints shall be tested with a 25 foot straightedge and shall conform to the requirements herein for surface smoothness. For short overnight intermissions in paving, a full depth bulkhead (wooden member) can be placed near the end of the previous day pavement. The bulkheads and excess material will be removed just prior to the placement of the following days pavement.

An approved joint heater shall be used on cold transverse or longitudinal joints where conditions are such that it is deemed necessary by the Engineer. The joint heater shall be capable of heating the joint to a minimum temperature of 200 °F. for a minimum depth of 1/4 inch at a speed commensurate with that of the laydown machine.

If it is deemed necessary by the Engineer to scale the joint, a light coat of asphalt emulsion shall be applied to the exposed edge before the joint is made.

Sufficient rolling equipment shall be furnished to satisfactorily compact and finish the amount of mixture being placed. However, there shall be a minimum of one (1) pneumatic-tired roller and one(1) smooth steel-wheeled roller with two (2) operators on the project at all times. During rolling operations, the speed of the roller(s) shall not exceed 3 miles per hour. If ample number of rollers are not present, the contractor shall adjust the asphalt placement rate to accommodate the roller(s) speed. The type and required number of rollers shall be on the project and in acceptable operating condition, prior to the placement of any asphalt material. All rollers shall be operated continuously from the breakdown through finish rolling. The contractor may use vibratory rollers in lieu of the steel-wheeled roller, however when the thickness of the asphalt is one(1) inch or less, all rolling will be done in the static mode.

When more than one width of asphalt concrete material will be placed, a 6 inch strip adjacent to the area on which future material is to be laid shall not be rolled until such material has been placed but shall not be left unrolled more than 2 hours after being placed, unless the 6 inch unrolled strip is first heated with a joint heater. After the first strip or width has been compacted, the second width shall be placed, finished and compacted as provided for the first width, except that rolling shall be extended to include the 6 inches of the first width not previously completed.

At any place not accessible to the roller, the mixture shall be throughly compacted with tampers and finished, where necessary, with a hot smoothing iron to provide a uniform and smooth layer over the entire area compacted in this manner.

Breakdown rolling shall begin as soon as the mixture will bear the roller without undue displacement. Rolling shall be longitudinal, overlapping on successive trips by at least ½ but not more than 3/4 the width of the rear wheels. Alternate trips of the roller shall be of slightly different lengths. The motion of the roller shall at all time be slow enough to avoid displacement of the mixture.

Pneumatic-tired roller(s) will be required for either the breakdown or compaction rolling. Rolling shall continue until the specific gravity of the compacted mixture is not less than 95 percent of the specific gravity of specimens composed of the same materials in similar proportions or composed of the same mixture compacted in the laboratory by the 75 blow method of ASTM D-1559, if the mix was designed by the Marshall method. If the mix was designed by The Asphalt Institute's SP-2 Gyratory method, rolling shall continue until the specific gravity of the compacted mixture is not less than 93 percent of the maximum theoretical specific gravity (ASTM D-2041) of specimens composed of the same materials in similar proportions or composed of the same mixture compacted in the laboratory.

Finish rolling shall be done by means of steel-wheeled roller or a vibratory roller operated in the static mode.

The completed surfacing shall be thoroughly compacted, smooth and true to grade and cross-section and free from ruts, humps, depressions or irregularities. An acceptable surface shall not vary more than 1/4 inch from the lower edge of a 25 foot straightedge when the straightedge is placed parallel to the centerline of the roadway. The straightedge shall be furnished by the contractor and shall be acceptable of the Engineer.

All streets shall be water tested for drainage in the presence of the Engineer or designated representative before final acceptance. Any areas not draining properly shall be corrected to the Engineer's satisfaction at the Contractor's expense. Water for this testing shall be provided and paid for by the Contractor.

When deviations in excess of the above tolerance are found, humps or depressions shall be corrected to meet the specified tolerance, or shall be cut out along neat straight lines and replaced with fresh hot mixture and thoroughly compacted to conform with and bond to the surrounding area. Materials and work necessary to correct such deviations shall be at no additional cost to the Contracting Agency.

321.5.5 Preservative Seal: An asphalt concrete preservative seal shall be used on all new asphalt concrete pavement and shall comply with Section 334. The Engineer will make a field determination and provide the actual application rate or delete the requirement. This seal is not required for pavement machine and surface replacement over pipe trenches, etc., unless specified in the special provisions.

321.6 CORRECTIVE REQUIREMENTS FOR DEFICIENCIES:

321.6.1 Thickness: When, in the opinion of the Engineer, there is reason to believe that the pavement may be deficient in thickness, cores will be taken by the Engineer at random locations, with 1 core for each 8 feet or portion thereof of width and for every 500 feet of lineal distance, with a minimum of 1 core per 8 feet of width between intersecting streets or portions thereof. When a deficiency of more than ¼ inch is found, 2 additional cores will be taken not closer than 100 feet apart nor closer than 100 feet to the original core, and the average of these 3 cores will be used to determine the amount of the deficiency. Further cores may be taken by the Contractor if he so chooses, to determine the limits of the deficiency, and shall be at no additional cost to the Contracting Agency but shall not be used in determining the average thickness of the pavement. Thickness of the cores shall be determined by average caliper measurement. Where pavement thickness is deficient by ¼ inch or less, it will be paid for at the contract price.

Where the pavement is deficient in thickness by more than ¼ inch but not more than ½ inch, payment will be reduced per Table 321-1.

TABLE 321-1

PAVEMENT THICKNESS PAYMENT REDUCTION (AC)

Specified Mat Thickness	Reduction in Payment
less than 1.50"	50%
1.50" to 1.99"	33%
2.00" to 2.49"	25%
2.50" to 2.99"	20%
3.00" and over	17%

When the deficiency of the pavement thickness exceeds ½ inch, the pavement shall be overlayed on the area affected, but in no case less than one City block or 660 feet whichever is less in length, for the full width of pavement, with a new mat of material specified by the Engineer, equal in thickness to the deficiency but not less than ½ inch in any instance. This is to be done at no additional cost to the Contracting Agency.

The monetary compensation shown in Table 321-1 will apply when a public agency is the Contracting Agency. When the contract is directly with a party other than a public agency, as in the case of permits, etc., the Contractor shall place an asphalt chip seal using precoated chips, complying with Section 330 when the pavement is deficient by more than ¼ inch but not more than ½ inch in lieu of the monetary consideration. The area covered shall be as specified in the preceding paragraph.

When the pavement is deficient in thickness by more than ¼ inch, all coring done to establish this premise shall be at the expense of the Contractor.

321.6.3 Density: When, in the opinion of the Engineer, there is reason to believe that the compaction of the mixture is deficient, cores will be taken in the same pattern as that defined in the first paragraph of this subsection, except that the figure 1 percent will be substituted for ¼ inch, and tested for specific gravity.

Where the specific gravity is deficient by 1 percentage point or less, it will be paid for at the contract price.

Where the specific gravity is deficient by more than 1 percentage point and the Contractor is unable to correct the deficiency, payment will be reduced per Table 321-2.

TABLE 321-2

PAVEMENT DENSITY PAYMENT REDUCTION (AC)

Deviation Below Specification	Reduction in Payment
2% points	2%
2 to 3% points	5%
3 to 5% points	10%

When the deviation is more than 5 percentage points, the Contractor shall place a standard precoated chip seal complying with Section 331 over the area involved but for not less than one City block or 660 feet whichever is less.

The monetary compensation shown in Table 321-2 will apply when a public agency is the Contracting Agency. When the contract is directly with a party other than a public agency, as in the case of permits, etc., the following applies in lieu of the monetary consideration above. When the deviation is 2% to 5% points inclusive, the Contractor shall place a asphalt chip seal using precoated chips complying with Section 330 over the area involved, but for not less than one City block or 660 feet, whichever is less.

321.6.3 Asphalt Cement Content: When the asphalt cement content exceeds the limits established in Section 710, 2 additional core tests will be made for each deficient test taken, and the average of all 3 tests made shall be used to determine the asphalt cement content.

When the asphalt cement content is in excess of that permitted, the Contractor shall remove any areas of bleeding, but in no case less than the specified roller width, as directed by the Engineer, and replace the affected material with new material meeting the specification requirements for the mix type involved. This shall be done, any time within a period of 1 year until the bleeding has been corrected, at no additional cost to the Contracting Agency. Should the stability of the mix be effected by the excess asphalt cement to such an extent that the pavement is displaced under normal traffic loads, within a period of 1 year, the areas affected shall be removed and replaced with new material, at no additional cost to the Contracting Agency.

When the asphalt cement content is from 0.0 to 0.2 percent points, weight of the total mixed material less than the minimum permitted in Section 710, payment to the Contractor for asphalt concrete pavement will be reduced per Table 321-3.

TABLE 321-3	
ASPHALT CEMENT CONTENT PAYMENT REDUCTION (AC)	
Deviation from that Permitted	**Payment Reduction**
0.0 to 0.1% points	2%
Over 0.1 to 0.2% points	5%

When the deviation is more than 0.2 percent points, greater than the permitted deviation, the Contractor shall place an asphalt chip seal using precoated chips complying with Section 330 over the area involved but not for less than one City block or 660 feet, whichever is less.

The monetary compensation shown in Table 321-3 will apply when a public agency is the Contracting Agency. When the contract is directly with a party other than a public agency, as in the case of permits, etc., the following penalties apply in lieu of the monetary considerations listed in Table 321-3. When the deviation is in the range of 0.0 to 0.2% points, not inclusive, greater than the permitted deviation, a separate absorption test shall be made to determine the proper application rate for the preservative seal for this specific section. The Engineer shall make the decision as to the rate of application for this section. When the deviation is 0.2% points or more greater than the permitted deviation, the Contractor shall place an asphalt chip seal using precoated chips in accordance with Section 330 over the area involved for not less than one City block or 660 feet, whichever is less.

321.6.4 Mineral Aggregate: When the mineral aggregate gradation deviates from the requirements of this specification in an amount which, in the opinion of the Engineer, will affect the stability or durability of the mix, the Contractor shall, as directed by the Engineer, either; remove the asphalt concrete and replace it with material which meets the requirements of this specification or place an additional mat of such thickness and gradation as required by the Engineer which will, in the opinion of the Engineer, correct the deficiency.

The above corrective work, due to deviations from the requirements for mineral aggregate, shall be done at no additional cost to the Contracting Agency.

321.7 CURBS:

The curb shall be placed by an approved extrusion type machine. In the event the Contractor wishes to utilize a template which varies from the cross-section shown on the plans, such change must meet the approval of the Engineer. The asphalt mix used shall be a 9.5 mm mix. One percent by weight of the total mixture shall consist of a granulated synthetic resin stiffener, Lexite or equal, complying with the following characteristics:

Softening Point (Ring & Ball)	ASTM D-36	210°F. minimum
Acid Number	ASTM D-465	Less than 1.00
Saponifiable matter	ASTM D-464	Less than 1%
Iodine Number	ASTM D-29	175—185

321.8 MEASUREMENT:

Asphalt concrete pavement will be measured by the ton, computed to the nearest 0.10 or square yard, for the mixture actually used as allowed above, which shall include the required quantities of mineral aggregates, filler material, asphalt cement, and sand. Measurement shall include any tonnage used to construct intersections, roadways, streets, or other miscellaneous surfaces indicated on the plans or as directed by the Engineer.

Weighmaster's Certificates, in accordance with Section 109, will be provided regardless of method of measurement.

The bid price per ton or square yard for asphalt concrete shall include the cost of the asphalt cement in the percentages as specified in Section 710.

Asphalt concrete curbs will be measured by the linear foot, parallel to the base or foundation, unless otherwise specified.

Preservative seal for asphalt concrete pavement will be measured by the gallon diluted, unless otherwise indicated in the special provisions.

321.9 PAYMENT:

The asphalt concrete measured as provided above, will be paid for at the contract price per ton or square yard, which price shall be full compensation for the item complete, as herein described and specified.

Payment for tack coat will be by the ton diluted, based on the rate of application; as directed by the Engineer.

The quantities of preservative seal, measured as provided above will be paid for at the contract bid price per gallon diluted or as specified, which price shall be full compensation for the item complete as herein described or as specified.

No payment will be made for any overrun in quantity of asphalt concrete in excess of 10 percent based on actual field measurement of area covered, design thickness, and a unit weight of 145 pounds per cubic foot. The calculations and payment for overrun will be by individual bid item. To compensate or adjust for a thickness deficiency in an underlying asphalt concrete course, the Engineer may authorize a quantity increase in excess of 10 percent for a subsequent asphalt concrete course. In such cases, the quantity in excess of 10 percent will be paid for at the lowest unit bid price.

Payment for the curbs will be at the contract unit price bid per linear foot, which price shall be full compensation for the curb complete in place, including all necessary labor, equipment and material.

Except as otherwise specified in the special provisions, no separate payment will be made for work necessary to construct miscellaneous items or surfaces of asphalt concrete.

End of Section

SECTION 322

ASPHALT CONCRETE OVERLAY

322.1 DESCRIPTION:

Asphalt concrete overlay consists of the placing and compaction of plant mix asphalt concrete over existing asphalt concrete paving. The thickness of the overlay shall be as shown on the plans or as specified in the special provisions. Preliminary preparation of existing surfaces will be required except when accomplished by the Contracting Agency, and it is so stipulated in the special provisions. With the exception of those which have been preheated and remixed only, existing surfaces shall receive a tack coat.

322.2 MATERIALS:

The tack coat, asphalt concrete mix and transportation of the mix shall be as specified in Sections 710 and 321, except for the maximum size of aggregate and percentage of binder which shall be as specified in the following paragraph.

322.3 ASPHALT CONCRETE:

The aggregate gradation and percentage of asphalt binder shall be in accordance with Section 710 using a 12.5 mm mix for overlay more than 1 inch in thickness and a 9.5 mm mix for overlay 1 inch or less in thickness, unless otherwise shown or specified in the special provisions.

322.4 PREPARATION OF SURFACES:

Except when they have been preheated and remixed, surfaces shall be prepared as follows:

Before placing asphalt concrete overlay, severely raveled areas or cracked areas that are depressed more than ¾ inch from the adjoining pavement shall be cut out and patched at least 48 hours prior to the resurfacing operation. Over-asphalted areas or rough high spots shall be removed by burning or blading. Large shrinkage cracks shall be filled with asphalt sealing compound acceptable to the Engineer. The entire surface shall be cleaned with a power broom. Raveled areas that do not require removing shall be cleaned by hand brooming. The above are incidental, and the cost thereof shall be included in the bid items.

After surfaces have been prepared to the satisfaction of the Engineer, they shall receive a tack coat as specified in Section 321. Traffic will not be permitted over surfaces which have received a tack coat. When the overlay is to extend onto the concrete gutter, the gutter shall be thoroughly cleaned of loose dust and cement particles and shall be tack coated.

322.5 CONSTRUCTION METHODS:

Placing and rolling on the asphalt concrete and the smoothness of the surface shall be as specified in Section 321.

322.6 MANHOLES:

Manholes shall be built up and the frames set flush with the finished surface of the new paving, and tops of valve boxes, clean-outs and other existing structures shall be adjusted to finish grade. In the event the base course and original paving have been removed or disturbed in order to build up the manhole, they shall be replaced with approved materials which shall be thoroughly compacted. The asphalt concrete around the manhole frame shall be completed and made flush with the adjacent overlay.

322.7 PAYMENT:

Payment for tack coat and asphalt concrete will be as specified in Section 321 except as noted above.

End of Section

SECTION 323

HEATER REMIX RESURFACING

323.1 DESCRIPTION:

Heater remix resurfacing consists of heating and remixing existing asphalt concrete paved surfaces, and unless otherwise specified in the special provisions, followed by the application of a rejuvenating agent and an asphalt concrete overlay.

323.2 COORDINATION:

There shall be close coordination between those performing the heating and remixing operation and those placing the asphalt concrete overaly.

323.3 WEATHER CONDITIONS:

Heater remix resurfacing shall not be done when it is raining or there is a threat of rain. The ambient temperature shall be at least 50°F. and rising and the application shall cease when the temperature is 55°F. and falling.

323.4 SURFACE PREPARATION:

The pavement to be treated shall be cleaned of trash, debris, earth or other deleterious substances present in sufficient quantity to interfere with the work to be performed.

323.5 HEATER REMIX EQUIPMENT:

The heater remixer shall consist of an insulated 8-12 foot minimum adjustable width heating furnace chamber with ports to inject fuel and air for satisfactory combustion without excessive smoke. The use of highly volatile fuels for heating, such as gasoline, will not be permitted within the boundaries of any incorporated City. Use of said highly volatile fuels for heating may be permitted in unincorporated areas only if authorized in writing by the Engineer prior to such use. The burners shall be rated at 10,000,000 BTU per hour minimum. The hourly production shall be not less than 1100 square yards of heated and remixed surface. Movable exhaust ducts shall be provided and equipped with shields to protect trees and adjacent shrubbery. The heating chamber and scarifier shall be positively controlled by side shifting and rear wheel steering to heat areas divergent from the central axis of the machine at intersections and along existing structures. The scarifier shall be sectioned and spring tensioned to insure continuous and undiminished pavement contact. It shall be equipped with automatic release mechanism to protect manholes and valve boxes from damage.

323.6 HEATING AND REMIXING:

Prior to heating and remixing, all manholes in the path of the heater shall be checked for presence of explosive gases and ventilated, if necessary. The existing surface shall be evenly heated and remixed to a depth of from 0.05 to 0.08 foot by a continuously moving surface heater remixer machine. The remixed surface shall be left in an evenly spread condition and aggregate shall not be pulverized, spalled or broken. At least 80 percent of the aggregate shall be remixed by spinning or tumbling and heated to a minimum temperature of not less than 250°F. measured within 3 minutes following heating. The asphalt binder shall not be charred in excess of 0.10 of 1 percent. No uncontrolled heating causing differential softening of the upper surfaces without affecting the underlying structure will be permitted. The remixed layer shall be uniformly and evenly heated throughout. Following the mixing operation, an asphalt rejuvenating agent, or emulsion, if required, of the type designated in the contract, shall be applied at the rate hereinafter specified, by a pressure distributor while the remixed material is still hot. The pressure distributor shall be as specified in Section 330.

323.7 ASPHALT REJUVENATING AGENTS:

Where the contract requires the use of an asphalt rejuvenating agent, or emulsion, it will designate one of the following types:

(A) Type I asphalt rejuvenating agent, a cationic oil and resin emulsion, shall comply with Section 718 and shall be applied at the rate of 0.07 to 0.15 gallons of undiluted concentrate per square yard. However, the exact quantity shall be as directed by the Engineer.

The Contractor shall furnish the Engineer with the brand name and name of the manufacturer of the Type I asphalt rejuvenating agent he proposes to use and the material shall be approved by the Engineer before it is used. The Contractor shall also furnish the Engineer with a manufacturer's certificate of compliance indicating quality and specification control.

(B) Type II asphalt emulsion shall be SS-1 or SS-1h emulsified asphalt as specified in Section 713 and shall be applied at the rate of 0.10 to 0.20 gallons per square yard undiluted. However, the exact quantity shall be as directed by the Engineer.

323.8 ASPHALT CONCRETE OVERLAY:

Asphalt concrete overlay shall be in accordance with applicable requirements specified in Section 322.

The asphalt concrete overlay shall be placed within 48 hours after the heating and remixing operation, unless otherwise specified in the special provisions.

The overlay shall cover existing pavement over areas not accessible to the heater remixer. Such areas including edges of adjoining concrete, shall receive a tack coat and joints shall be finished as specified in Section 321.

323.9 PAYMENT:

Payment for heater remix surfacing will be made on the basis shown below:

(A) Heater Remix Only	Square Yard
(B) Type I Asphalt Rejuvenating Agent	Ton (Undiluted)
(C) Type II Asphalt Emulsion	Ton (Undiluted)
(D) Asphalt Concrete Overlay	Ton or Square Yard
(E) Tack Coat	Ton (Diluted)

End of Section

SECTION 324

PORTLAND CEMENT CONCRETE STREET PAVEMENT

324.1 DESCRIPTION:

This item shall consist of construction of a pavement composed of plain jointed portland cement concrete on a prepared subgrade. The Contractor shall furnish all labor, materials and equipment necessary for the construction of the pavement in accordance with these specifications and in reasonably close conformity to the lines, grades, thicknesses and details indicated by the plans or as established by the Engineer. All tests shall be performed by a laboratory approved by the Engineer.

324.2 MATERIALS:

324.2.1 Portland Cement Concrete: Portland cement concrete shall conform to the applicable requirements of MAG Standard Specifications Section 725 and the additional requirements of this section.

Concrete shall develop a modulus of rupture of not less than 520 psi within 14 days after placement, and not less than 650 psi at 28 days' age as determined by tests of specimens fabricated in accordance with ASTM C-31 and tested in accordance with ASTM C-78 procedures. The Contractor shall submit data acceptable to the Engineer at least 30 days in advance of the start of concrete paving operations which demonstrate that concrete produced with materials and proportions as proposed for use in the construction will conform to the modulus of rupture requirements of these specifications. The data shall include results of compressive strength tests conducted at the same age as modulus of rupture tests to establish the correlation which can be expected between the flexural and compressive strength properties of the concrete. The Engineer may, at his option, use compressive strength tests of specimens fabricated in accordance with ASTM C-31 and tested in accordance with ASTM C-39 to verify conformance to the modulus of rupture requirements of these specifications.

The maximum concrete slump shall be as determined by the approved mix design.

324.2.2 Concrete Materials: Portland cement conforming to the requirements of ASTM C-150 for Type III, low-alkali, may be used at the Contractor's option. Aggregates shall be crushed rock or gravel conforming to the requirements of ASTM C-33. Coarse aggregate gradation shall conform to requirements for Size No. 57. Fine aggregates shall have an average sand equivalent of not less than 75 when tested in accordance with the requirements of AASHTO T-176 or ASTM D-2419.

324.2.3 Reinforcement: Tie bars shall be deformed billet steel reinforcing bars conforming to the requirements of ASTM A-615, Grade 40.

Dowel bars shall be plain round bars conforming to the requirements of ASTM A-615, Grade 40. One-half the length of each dowel bar shall be painted with one coat of tar paint.

Metal sleeves of an approved design shall be provided for use with dowel bars. Sleeves shall cover 2 inches, plus or minus ¼ inch, of the dowel, shall have a closed end with a suitable stop to hold the end at least 1 inch from the end of the bar, and shall be designed to prevent collapse during construction. An approved basket support shall be used to hold bars parallel to pavement surface.

324.2.4 Curing Materials: Materials for curing concrete shall conform to the requirements of Section 726.

324.2.5 Joint Materials: Joint sealant shall be a one component, hot-poured type, conforming to the requirements of ASTM D-3406.

Back-up rod or tape and bond breakers provided to control the depth of sealant, achieve the desired shape factor, support sealant against indentation and sag, or to prevent bond of the sealant to the bottom concrete surface shall be compatible with the joint sealant material.

Other pour-type joint sealants conforming to the requirements of Subsection 729.2 may be used if approved by the Engineer.

Performed expansion joint filler shall conform to the requirements of ASTM D-1751.

324.3 CONSTRUCTION METHODS:

324.3.1 General: Pavement shall be constructed with mechanical equipment utilizing stationary side forms or by the use of slipform paving equipment without stationary side forms. Manual methods of placing and finishing concrete with stationary side forms may be permitted by the Engineer for areas inaccessible for mechanical equipment.

Curbs, or combined curb and gutter, shall be constructed along the edges of all pavement where shown in the plans and shall be formed to the cross-section in accordance with the plans. Curbs may be constructed integrally with the pavement using a slipform or extrusion equipment or placed immediately after finishing operations by hand forming or using face forms. They may also be constructed as a separate operation after pavement construction using forms, slipform, or extrusion equipment. The edge of each gutter of the curb and gutter section built first may be used as a form in lieu of the setting of stationary side forms. Curbs, or curb and gutter, constructed as a separate operation shall otherwise conform to the requirements of Section 340. All curbs and gutters shall have the same thickness as the main roadway section. All joints shall be aligned with roadway joints.

324.3.2 Equipment: Design, capacity, and mechanical condition of equipment and tools necessary for handling materials and performing all parts of the work shall be approved by the Engineer. Equipment shall be at the jobsite sufficiently ahead of the start of concrete paving operations to permit thorough examination and approval by the Engineer prior to start of concrete paving.

Equipment used to place concrete may consist of one or more machines, shall be capable of uniformly distributing and consolidating the concrete as it is placed without segregation and shall be capable of producing concrete pavement which will conform to the required cross-section with a minimum of hand work. The number and capacity of machines furnished shall be adequate to perform the work required at a rate equal to the concrete delivery rate.

Vibrators shall be used to consolidate concrete; the rate of vibration shall be not less than 3,500 cycles per minute for surface vibrators and not less than 8,000 cycles per minute for internal vibrators. Power to vibrators mounted on mechanical equipment shall be so connected that vibration ceases when forward or backward motion of the machine is stopped. Contractor shall furnish a tachometer or other suitable device for measuring and indicating the frequency of vibration.

Slipform pavers shall be equipped with high frequency internal vibrators mounted with axes either parallel or normal to pavement alignment for the full paving width. Vibrators mounted with axes parallel with pavement alignment shall be spaced at intervals not to exceed 24 inches, measured center-to-center. Vibrators mounted with axes normal to pavement alignment shall be spaced so that lateral clearance between individual vibrating units does not exceed 6 inches.

Slipform paving equipment which will be wholly or partially supported on subgrade shall be equipped with traveling side forms of sufficient dimensions, shape and strength to support the concrete at free edges laterally for a sufficient length of time during placement to produce pavement of the required cross-section, and shall be equipped and operate with automatic sensing and control devices such that the machine automatically senses deviations from the established guideline and performs the necessary corrective maneuvers to overcome variations from correct grade and alignment.

When concrete will be placed adjacent to existing pavement or curb and gutter, that part of the equipment supported on the existing pavement or curb and gutter shall be equipped with protective pads on crawler tracks or rubber-tired wheels with bearing surfaces offset a sufficient distance from the edge of the pavement or curb and gutter to avoid edge damage, or the surface of the existing pavement or curb and gutter shall be otherwise protected against such damage in a manner approved by the Engineer.

324.3.3 Subgrade Preparation: Subgrade shall conform to the compaction and elevation tolerances specified for the material involved, shall be kept smooth and compacted, and shall be free of all loose and extraneous material when concrete is placed.

The surface of the subgrade shall be uniformly moist when concrete is placed. The surface of the subgrade shall be moistened immediately prior to placement of concrete if necessary to produce a uniformly moist condition. Any excess water standing in pools or flowing on the surface shall be removed prior to placing concrete.

Construction equipment shall not operate on the subgrade in the paving lane when conditions of the job will permit operation from outside the lane. When job conditions make it necessary to operate equipment on the subgrade in the paving lane, suitable runways or other precautions shall be taken to prevent rutting or displacement of subgrade material. The grade shall be checked and corrected immediately ahead of concrete placement and all disturbed grade shall be properly recompacted.

When concrete pavement will be placed with slipform paving equipment which will be supported and operate on the subgrade, the subgrade and slipform paver track area shall be brought to proper grade and cross-section by means of a properly designed and operated machine.

324.3.4 Stationary Side Forms and Setting of Forms: Side form sections shall be straight, free from warps, bends, indentations or other defects. Side forms shall be of metal, have a base width of at least four inches and a minimum depth equal to the thickness of the pavement. No section shall show a variation from a true plane greater than ⅛ inch in ten feet on the top of the form or more than ¼ inch in ten feet on the inside face. Flexible or curved forms of proper radius shall be used for curves of 100 feet radius or less. Suitable materials other than metal may be used to form end closures or at other locations where use of metal forms is not practical when approved by the Engineer. Forms shall be thoroughly cleaned and oiled each time they are used.

Forms shall be of such cross-section and strength and so secured and supported on the subgrade as to resist the pressure of the concrete when placed and the impact and vibration of any equipment they are to support without springing or settlement. The method of connection between sections shall be such that the joints shall not move in any direction.

Subgrade under forms shall be compacted and cut to grade so that the form when set will be uniformly supported for its entire length at the specified elevation. Forms shall be so supported and secured during the entire operation of placing and finishing that they will not deviate vertically at any point more than ⅛ inch from the proper elevation. Forms shall be set to the required lines and grades well in advance and for a distance sufficient to prevent delay in placing concrete, and shall be approved by the Engineer prior to placing concrete. When any form has been disturbed or any grade has become unstable, the form shall be reset and rechecked.

Side forms shall remain in place until the day after placing concrete, and in all cases until the edge of the pavement no longer requires the protection of the forms. Forms shall be carefully removed in such a manner as to avoid damage to the pavement. Use of pry bars between the pavement and the forms will not be permitted.

324.3.5 Placing, Spreading and Compacting: Except when otherwise approved by the Engineer, concrete shall be deposited on the subgrade and spread full width using mechanical methods that result in a minimum of handling and segregation. Necessary hand spreading shall be done with shovels, not rakes. Placement shall be continuous between transverse joints without the use of intermediate bulkheads.

The Contractor shall make adequate advance arrangements for preventing delay in delivery and placing of concrete. An interval of more than 15 minutes between placing of any two consecutive batches shall constitute cause for stopping operations, and Contractor shall install a construction joint in the concrete already placed at the location and of the type directed by the Engineer.

Concrete shall be deposited as near to expansion and construction joints as possible without disturbing them but shall not be dumped onto a joint assembly. Concrete shall be thoroughly consolidated against and along the faces of all forms, adjacent pavement or curb and gutter, and on both sides of all joint assemblies. Vibrators shall not be permitted to come in contact with joint assemblies, the grade, or side forms, and shall not be operated longer than 15 seconds in any one location.

Manual methods of placing, spreading, and compacting may be used in the construction of pavement lanes of irregular width or widths less than 10 feet, and sections of intersections or other locations with complex variable surface configurations when permitted by the Engineer. Workmen shall not be allowed to walk in the freshly placed concrete with boots or shoes coated with earth or other foreign substances.

324.3.6 Shaping and Initial Finishing: Concrete shall be struck off, consolidated, and float-finished with a slipform paver, mechanical finishing machine, vibrating screed, or by hand finishing methods when approved by the Engineer so that the complete pavement will conform to the thickness and cross-section requirements of the plans and specifications. When the pavement being constructed is contiguous to existing parallel concrete pavement or curb and gutter, the elevation of the new pavement surface shall conform as closely as possible to the elevation of the existing pavement or gutter surface and in a manner which will prevent ponding.

Water shall not be applied to the pavement surface during screeding and finishing operations in excess of the amount lost by evaporation. Adding water to the surface of the concrete to assist in finishing operations shall not be permitted. When applications of water to the surface are required to prevent rapid evaporation of water from the surface during finishing operations, it shall be applied as a fog spray and with approved spray equipment.

324.3.6 a) Slipform Supported on Subgrade Method: The equipment shall spread, consolidate, screed and float-finish the concrete in one complete pass of the machine. The machine shall be operated with as nearly a continuous forward movement as possible and all paving operations shall be so coordinated as to provide uniform progress with stopping and starting of the paver held to a minimum. Sliding side forms shall be rigidly held together to prevent spreading. Any edge slump of the pavement, exclusive of edge rounding, in excess of ¼ inch shall be corrected.

No abrupt changes in longitudinal alignment of the pavement will be permitted. The horizontal deviation shall not exceed 1 inch from the alignment established by the Engineer.

While concrete is being spread, compacted and shaped, vibrating units shall be operated within fresh concrete so that the longitudinal axis, at the center of each unit, is not more than 6 inches above the top of the subgrade. Amplitude of vibration shall be sufficient to be perceptible on the surface of concrete along the entire length of vibrating units and for a distance of at least one foot therefrom.

324.3.6 b) Mechanical Equipment Supported on Fixed Form Method: When concrete is spread without the use of internal vibration, the finishing machine shall be equipped with vibrating equipment that will internally vibrate the concrete for the full paving width and with not less than two oscillating or reciprocating screeds. Concrete shall be struck off and consolidated so that the surface will conform to the finished grade and cross-section shown on the project plans and with sufficient material on the surface for floating operations.

After the concrete has been struck off and consolidated, it shall be floated with a longitudinal float of a type approved by the Engineer.

A slipform paver or a single machine which will effectively spread, consolidate, screed, and float in one operation may be used in lieu of separate finishing and floating equipment.

324.3.6 c) Manual Methods with Fixed Forms: Concrete shall be deposited, spread and struck off to such an elevation that, when properly consolidated, the surface will conform to the required lines and grades. Concrete shall be consolidated by internal vibration as it is struck off with a screed. A slight excess of concrete shall be kept in front of the screed at all times during the strike-off operation.

After consolidation and screeding, concrete shall be tamped to the proper surface elevation and cross-section using either a heavy plank with a length in excess of the width of pavement being placed by one foot or more, or with a mechanical vibrating unit spanning the full width between forms. The tamping plank, if used, shall be stiffened as necessary to prevent sag and shall have the lower tamping edge shod with metal. The tamping plank shall be moved forward with a combined vertical tamping and longitudinal screeding motion so that the concrete will be thoroughly consolidated and the surface screeded to the required elevation. A small surplus of concrete shall be kept in front of the tamper or vibrating unit. Tamping or vibrating shall continue until the specified cross-section is obtained and the mortar flushed slightly to the surface. On grades in excess of 5 percent a second strike board shall follow from 25 to 50 feet behind the tamper or vibrating unit and shall be used in the same manner to remove waves caused by the flow of concrete behind the first strike board.

Other methods than the tamping plank may be utilized for screeding when approved by the Engineer.

Pavement shall be finished smooth and true to grade with suitable manually operated floats or powered finishing equipment.

324.3.7 Final Finishing: After the pavement has been float finished, it shall be scraped with a 10-foot long straightedge equipped with a handle to permit operations from the edge of the pavement, and excess water and laitance shall be removed from the surface. The straightedge shall be operated parallel to the centerline of the pavement and shall be moved forward one-half length after each pass. Irregularities shall be corrected by adding or removing concrete, and disturbed places shall be again straight-edged.

Long-handled wood floats shall be used only in areas not accessible to finishing equipment and in emergencies, and use of such floats shall be confined to a minimum.

The addition of water to the surface of the concrete to assist in finishing operations shall not be permitted unless approved by the Engineer. When addition of water to the surface is permitted to prevent rapid evaporation of water from the surface during finish, it shall be applied as a fog spray with approved spray equipment.

Pavement edges and joints shall be edged in accordance with details shown on the project plans or as directed by the Engineer.

In advance of curing operations, pavement shall be given a texturing. Texturing shall be performed with an artificial turf drag with a board added to assure the weight needed to obtain an approved surface. Artificial turf shall be a molded composite structure with polyethylene face, nylon and polyester backing, a pile height of 0.85 inches, and total weight of 75 oz./sq. yd. The approved surface will be made by the Engineer on the initial construction and shall not be changed without approval. Each time the construction is stopped or cause the texturing to stop, the artificial turf must be shaken clean before continuing.

324.3.8 Curing: Curing shall begin immediately following surface texturing and edging. Contractor shall have at hand and ready to install before concrete placement begins the materials and equipment needed for adequate curing.

After finishing operations have been completed, the newly placed concrete shall be cured by moist curing methods, by application of a white liquid membrane compound, or by a combination of these methods. All surfaces not covered by reasonably waterproof forms shall be kept damp by applying water with a nozzle that so atomizes the flow of water that a fog mist and not a spray is formed until the surface is covered with liquid membrane compound, the surface has hardened sufficiently to permit sprinkling of the surface, or moist curing by covering with wet burlap or other approved materials can be initiated. Moisture from the nozzle shall not be applied under pressure directly upon the concrete and shall not be allowed to accumulate on the concrete in a quantity sufficient to cause a flow and erode the surface. Moist curing shall be continued until liquid membrane curing compound or other type of curing membrane is applied.

Membrane curing compound shall be applied to all pavement by automatic mechanical method from a construction bridge.

The edges of concrete slabs exposed by the removal of forms shall be protected immediately to provide these exposed surfaces with continuous curing treatment equal to the method selected for curing the pavement surface.

The membrane method of curing may be applied behind the final finishing operation after all free water has disappeared from the surface. Complete and uniform coverage at the rate of one gallon per 100 square feet, or as otherwise recommended by the manufacturer, shall be required. Compound shall be kept agitated to prevent pigment from settling.

324.3.9 Joints:

324.3.9.1 General: Joints shall be provided in the pavement of the type, dimensions and at the locations as indicated in the plans or as specified herein.

Joints in concrete pavement will be designated as transverse expansion joints, longitudinal or transverse construction joints, longitudinal or transverse weakened plane joints, or isolation joints. The faces of all joints shall be perpendicular to the pavement surface. Joints shall be constructed in accordance with the details shown in the plans and in accordance with the following provisions.

At all times prior to acceptance of the construction, joints shall be maintained clean and free of all soil, gravel, and other foreign material except approved types of joint filler materials.

324.3.9.2 Longitudinal Joints: Longitudinal joints shall be weakened plane or construction joints. Longitudinal weakened plane joints shall be constructed by sawing or by insertion of a parting strip in the plastic concrete to be left in place. Longitudinal construction joints shall be constructed with tie bars or keyways as indicated in the plans.

324.3.9.3 Transverse Joints: Transverse joints shall be weakened plane, construction or expansion joints. All transverse weakened plane joints will be constructed by sawing and in accordance with the details shown in the project plans. Transverse construction joints shall be constructed with dowels or with sawed keyways and in accordance with the details shown in the project plans. Transverse expansion joints shall be constructed as butt joints with vertical expansion joint filler and with or without dowel bars in accordance with the details shown in the project plans. Dowel bars shall be supported on a basket-type system with a base plate on subgrade and up the side form to prevent material from entering dowel openings.

324.3.9.4 Joint Location: Longitudinal joints shall be constructed between traffic lanes and at other locations as indicated in the project plans.

Transverse construction joints shall be constructed at the end of a day's production or when placing of concrete is discontinued for more than 45 minutes. Transverse construction joints will not be allowed within 500 feet of a structure unless otherwise approved by the Engineer.

Transverse weakened plane joints in concrete placed in lanes adjacent to previously placed concrete shall be located to align with weakened plane joints in the adjacent lanes. No transverse weakened plane joint shall be constructed within 6 feet of another transverse joint. When the planned spacing of transverse weakened plane joints results in location of a weakened plane joint within 6 feet of another transverse joint, the transverse weakened plane joint shall be relocated so it is not within 6 feet of said transverse joint.

Transverse expansion joints shall be located at the junction of the normal roadway pavement slab with bridge approach slabs and at other locations as shown on the plans.

Isolation joints shall be provided around manholes, catch basins, or other elements which extend into or project through the pavement and act as point of restraint to horizontal or vertical movement of the pavement.

324.3.9.5 Construction of Joints:

324.3.9.5.1 Sawed Joints: Sawed joints shall be constructed by cutting a groove in the pavement using a single or multiple-blade power saw. The groove shall be cut to the dimensions shown on the project plans. Suitable guidelines or devices shall be used to assure joints are cut true to the lines as shown on the project plans.

If joints are sawed in stages, the initial saw cut shall be of the minimum width specified and sawed to the required depth shown on the project plans. The depth of the initial saw cut in the construction of weakened plane joints shall be a minimum of ¼ of slab thickness.

Sawing of weakened plane joints shall be done before uncontrolled cracking takes place, and after the concrete has hardened to the extent that tearing or raveling of the edges of the saw cut is not excessive. The exact time for all sawing shall be determined by the Contractor when not otherwise specified herein.

Any procedure for sawing joints that results in premature, uncontrolled cracking shall be revised immediately. The Contractor shall be responsible for replacing or repairing areas containing uncontrolled cracking and for repairing spalled or chipped concrete along the edges of sawed joints as directed and to the satisfaction of the Engineer.

After saw cutting of the joint and just prior to sealing the joint, the internal joint surfaces shall be cleaned of all dirt, curing and compound residue, laitance and other foreign materials. The internal joint surface shall be defined as the sawed portion of the joint and the resultant crack for the full depth of the pavement.

324.3.9.5.2 Construction Joints: Longitudinal and transverse construction joints shall be of the type and formed in accordance witb the details shown on Detail 224 or as directed by the Engineer.

324.3.9.5.3 Expansion and Isolation Joints: Transverse expansion and isolation joints shall be formed in accordance with the details shown on Detail 224 or as directed by the Engineer.

324.3.9.5.4 Sealing of Joints: Sealing of sawed joints where required shall be completed prior to the opening of the pavement to traffic unless otherwise approved by the Engineer. When delayed sealing of sawed joints is permitted, saw cuts and formed recess to be filled with sealant shall be protected to ensure thorough curing of the concrete along the edges of the joint recesses and to prevent entry of foreign materials into the joint. At the Contractor's option, inert compressible joint filler material such as plastic backer rod or upholstery cord may be inserted into joints immediately after sawing or forming of the joint recess to provide curing protection and prevent entry of foreign material. If absorptive filler material is used, it shall be thoroughly moistened either before or immediately after installation in the sawed groove. When filler material is rope, or similar material which does not fill the entire depth of sawed groove, it shall be depressed not less than ½ inch below the pavement surface before the pavement is opened to traffic.

Sealant shall be applied in accordance with the sealant manufacturer's recommendations. A primer shall be furnished and applied after the joint has been cleaned and prepared to receive sealant if so indicated in the manufacturer's recommendations.

Prior to the application of the sealant, an approved type of inert, compressible joint filler material such as plastic backer rod or upholstery cord, or an approved type of bond breaker, shall be inserted along the joint in accordance with the details shown on the project plans. The joint shall then be filled with sealant to a level not less than ⅛ inch or more than ¼ inch below the elevation of the pavement surface adjacent to the joint edge.

The equipment used to apply sealant shall be as recommended by the sealant manufacturer. Sealant shall not be spilled on the surface of the concrete pavement, and Contractor shall remove any sealant inadvertently spilled on the pavement surface.

324.3.9.5.5 Repair of Cracks, Spalls, Raveling and Tearing: Contractor shall be responsible for replacing or repairing all areas of pavement containing uncontrolled cracking, surface spalls, or other types of surface defects as directed by the Engineer. Repairs shall be made by methods acceptable to the Engineer and the repair shall be completed to the satisfaction of the Engineer.

324.4 Tests of Finished Pavement:

324.4.1 Smoothness: The pavement Surface Profile Index shall not exceed seven inches per mile in any 0.1 of a mile section or any remaining portion thereof as measured along any line parallel to the edge of the pavement except at and through intersections, and at and through railroad crossings. The surface profiles will be evaluated in accordance with the requirements of Arizona Department of Transportation Test Method 801.

After completion of all paving, the Contractor shall clean the pavement by brooming or any other method to allow the Engineer to obtain accurate profilograph readings. Profilograph readings will be taken one time in each wheel path of each lane.

Grinding will be required if necessary to produce a surface smoothness conforming to the requirements of this section. In addition, all high areas having deviations in excess of 0.3 of an inch shall be ground. After grinding, the finished surface of the ground area shall be provided with a uniform texture acceptable to the Engineer. The method of texturing shall be approved by the Engineer.

In addition to the Surface Profile Index requirement, the pavement surface including pavement in intersections will be tested with a ten-foot straight-edge placed parallel to the centerline of the pavement in each lane. Ordinates measured from the face of the straight-edge to pavement surface shall at no place exceed one-quarter inch. Areas that do not meet the required surface accuracy as determined by straight-edge testing shall be marked, and Contractor shall at his own expense and as required by the Engineer either:

1. Grind down areas higher than ¼ inch but not more than ½ inch above the correct surface.
2. Correct areas lower than ¼ inch but not lower than ½ inch below the correct surface by grinding down the adjacent areas.
3. Break out and replace pavement when the deviation exceeds ½ inch from the correct surface. Area replaced shall be of a length, width and depth as required to allow formation of a new slab of the required quality.

324.4.2 Pavement Thickness: Concrete pavement shall be constructed in accordance with the thickness requirements of the plans and specifications. Tolerances for base and subgrade construction and other provisions of these specifications which may affect thickness shall not be construed to modify such thickness requirements.

For the purpose of determining acceptability for thickness, cores shall be drilled by the Contractor at the locations specified by the Engineer. Cores shall have a minimum diameter of four inches. Length of cores will be determined in accordance with the requirements of AASHTO T-148 by measurements read to the nearest thousandth of an inch. The average of the measurements will be reported to the nearest hundredth of an inch.

In calculating average length, cores which have a length in excess of the thickness specified by more than 0.25 of an inch will be deemed to have a length of the specified thickness plus 0.25 of an inch. Field length measurements will be acceptable in lieu of average length measurement in accordance with the requirements of AASHTO T-148, provided the original core in any secondary unit meets or exceeds the specified thickness. Measurements in accordance with the requirements of AASHTO T-148 will be required on any questionable thickness measurements and on the three cores used to determine the average length for payment, regardless of length.

A primary unit of pavement shall be the area of pavement placed in each day's paving operation. Each intersection or special section shall be considered as a primary unit.

A secondary unit of pavement shall consist of 1,000 linear feet, or fraction thereof, of each traffic lane. Each 1,300 square yards of pavement in intersections, etc., shall be considered a secondary unit regardless of when the concrete was placed.

One core shall be drilled in each secondary unit. If the length of that core is not deficient by more than 0.25 of an inch, that secondary unit will be measured for payment at 100 percent. If the length of that core is deficient by more than 0.25 of an inch but less than 1.0 inch, two additional cores shall be drilled within that secondary unit and the length of the three cores averaged. If the average length is not deficient by more than 0.25 of an inch, that secondary unit will be measured for payment at 100 percent. If the average length of the three cores is deficient by more than 0.25 of an inch, that secondary unit will be measured for payment in accordance with the requirements of Table 324-1.

If the core in the secondary unit is deficient by more than 1.00 inch, that core will not be used in determining the average thickness of that secondary unit. Additional cores shall be drilled at intervals not to exceed ten feet in each direction from the deficient core, parallel to the main-line centerline, until one core is obtained in each direction which is not deficient by more than 1.00 inch. The pavement between these two cores will be evaluated separately from the balance of the pavement in that secondary unit. The limits for evaluation shall be between the longitudinal weakened plane or construction joint on each side of the core and between the next transverse weakened plane, construction, or expansion joint beyond each of the last two cores. Unless the Engineer allows the pavement to remain, it shall be removed and replaced with pavement of the specified thickness and no payment will be made for the removal pavement. One additional core shall be drilled in the secondary unit to represent the quality of the concrete in that unit after deducting the limits of the deficient area if that pavement represented by the deficient area is allowed to remain. The core shall be measured for payment as hereinbefore specified.

If the pavement in the deficient area is removed, either by the order of the Engineer or at the option of the Contractor, it shall be removed between the limits of the evaluation. After the pavement has been replaced, one core shall be drilled at random in that secondary unit after deducting the area of the replaced pavement and one core shall be drilled in the new pavement. Pavement represented by the core drilled in the secondary unit, less the replaced pavement, will be measured for payment as hereinbefore specified. The core drilled in the replaced pavement shall be not less than the specified thickness, otherwise that pavement will not be measured or paid for.

At all locations where cores have been drilled, the resulting holes shall be filled with concrete in a manner satisfactory to the Engineer.

324.5 PROTECTION OF PAVEMENT:

The Contractor shall be responsible for taking adequate steps to protect concrete placed during rain, hot or cold weather as defined in ACI Standards. Any concrete damaged by rain or extreme temperatures shall be removed and replaced at the Contractor's expense.

When ordered by the Engineer, pavement crossings shall be constructed for the convenience of public traffic. Where motor vehicles are encountered, a temporary bridge to span the newly placed concrete will be provided.

No traffic or Contractor's equipment, except as hereinafter provided, will be permitted on the pavement until the concrete has developed a compressive strength of 3500 psi.

Equipment for sawing joints will be permitted on the pavement when, in the Contractor's judgment, the concrete has developed sufficient strength to support the equipment without damage to the concrete. In case of visible cracking or other damage to the pavement, operation of the equipment on the pavement shall be immediately discontinued.

Any damage to the pavement resulting from early use of pavement by the Contractor's equipment shall be repaired by the Contractor at his expense.

324.6 METHOD OF MEASUREMENT:

Portland cement concrete pavement will be measured by the square yard. Any opening in excess of one square yard will not be measured for payment.

324.7 BASIS OF PAYMENT:

The accepted quantities of portland cement concrete pavement, measured as provided for herein, will be paid for at the contract unit price complete in place, except that where the average length of cores indicates pavement deficient in thickness by more than 0.25 of an inch but not more than 1.00 inch, payment will be made as specified in Table 324-1. Payment will be made to the nearest cent.

No additional payment will be allowed for pavement constructed in excess of the thickness specified on the project plans.

TABLE 324-1

PAVEMENT THICKNESS PAYMENT REDUCTION (AC)

Core Thickness, Less Than Specified Thickness, Inches	Percent of Contract Unit Price Allowed
0.00 to 0.25	100
0.26 to 0.35	93
0.36 to 0.45	85
0.46 to 0.55	75
0.56 to 0.75	63
0.76 to 1.00	50

End of Section

SECTION 327

HOT IN -PLACE RECYCLING

327.1 DESCRIPTION

This work shall consist of rehabilitating the surface layer of existing asphalt concrete pavement. Rehabilitation shall be accomplished with specially designed equipment in a simultaneous multistep process of heating, scarifying, applying an asphalt recycling agent and thoroughly remixing and reshaping the old asphalt concrete surface, and then placing an overlay of new hot mix asphalt concrete in compliance with the lines, grades, thickness and typical cross sections shown on the plans. NOTE: This work shall be performed with a single machine that heats, scarifies, recycles and spreads new asphalt concrete hot mix, all in one continuous pass. Additional preheaters may be utilized to achieve specified depth and temperature.

327.2 MATERIALS:

Asphalt Recycling Agent used to restore the existing pavement shall be approved by the Engineer prior to use. A manufacturer's certification shall be submitted for each load of recycling agent delivered to the project.

Hot Mix Asphalt Concrete (HMAC) shall meet the requirements of section 710.

327.3 EQUIPMENT

The Contractor shall specify, in the bid proposal, the type of equipment intended for use. The equipment shall be on the project in operating condition a minimum of 2 days before beginning operations to allow evaluation by the Engineer. The Engineer reserves the right to reject equipment deemed not suitable for the intended purpose, at no additional cost to the Agency.

The recycling equipment shall meet the following minimum requirements:

Repaver: The equipment for this work shall be a self-contained, self-propelled, automated unit capable of heating, scarifying (or milling), mixing, redistributing and leveling the existing asphalt concrete pavement to the specified depth, all in a single pass.

It shall have a means of automatically applying an asphalt recycling agent at a uniform rate as shown on the plans, special provisions, or as requested by the Engineer. It shall be capable of applying a new HMAC layer over the hot, partially compacted recycled mixture.

Heating Unit: This unit shall be hooded to prevent damage to adjacent property, including trees and shrubs. It shall be capable of heating the pavement surface to a temperature high enough (375° - 400° F.) to allow scarification to the required depth without breaking aggregate particles or charring the pavement surface.

Scarifying or Milling Units: The sacrificers or rotary millers shall be able to penetrate the pavement surface to a depth shown, up to a maximum of one inch in one pass. Sacrificers or millers shall be equipped with separate, automatic height adjustments which allow clearance over manholes and other obstructions.

Recycling Agent Applicator: This system shall automatically add recycling agent to the scarified material at a uniform rate as shown on the plans, special provisions or as requested by the Engineer. The application rate shall be synchronized with the machine's forward speed to maintain a tolerance, within 5% of the specified rate.

Conveying System: Shall consist of a receiving hopper and conveying system to collect and transport new hot mix asphalt concrete material to the finishing unit.

Recycling Unit: A system that mixes, distributes and levels the scarified material over the width processed to produce a uniform cross-section of recycled material.

Finishing Unit: This unit shall have automatic screed controls to produce a surface conforming to that shown on the plans. The unit shall be capable of producing a uniform slope, grade and texture.

327.4 CONSTRUCTION METHODS:

The pavement to be treated shall be cleaned of trash, debris, earth or other deleterious substances present in sufficient quantity to interfere with the work to be performed.

The heating shall be sufficient to soften the pavement to the extent that it can be scarified or milled to the depth specified. Due to the varying properties of the existing asphalt pavement, depth of the scarification material may be varied, if requested by the Engineer. Heating shall be done in a manner that will assure uniform softening and will not char the asphalt.

The Contractor shall be responsible for protecting the area adjacent to the work from heat damage. If damage occurs, the Contractor shall replace all damaged areas, landscape, curb, parked vehicles, etc. at not cost to the Agency.

To provide a welded longitudinal joint, the standing edge of the adjoining asphalt pavement shall be fully heated to a width at least 2 inches beyond the width to be scarified and recycled.

Immediately following heating, the pavement surface shall be scarified (or milled) to the specified depth. The scarified material shall have a temperature between 225° F. and 265° F. unless otherwise requested by the Engineer. The material shall be leveled, mixed and treated with a recycling agent. The application rate shall be as shown on the plans, special provisions or as requested by the Engineer. Application rate for the recycling agent may be adjusted as necessary to maintain a uniform mixture.

The reclaimed material shall be gathered by a leveling device and spread to a uniform depth over the width being processed. After it is placed and while it still has a residual temperature of at lease 190 F., a layer of new HMAC conforming to the job mix formula shall be placed over it. The application rate of new material shall be sufficient to provide the required pavement thickness.

Construction, compaction and smoothness of the surface shall be in accordance with Section 321 except as modified in this section

327.5 WEATHER CONDITIONS:

This work shall not be done when it is raining or if there is a threat of rain. The ambient temperature shall be at least 50° F. and rising and the application shall cease when the temperature reaches 55° F. and falling.

327.6 AIR QUALITY:

The equipment and process shall meet all Arizona Department of Environmental Quality (ADEQ) and County air quality regulations and the Contractor shall have the appropriate ADEQ air quality control permit prior to the issuance of the notice to proceed.

327.7 MEASUREMENT:

Pavement Recycling will be measured by the square yard completed and accepted. Recycling Agent will measured by the gallon of actual material used in place. Hot Mix Asphalt Concrete (HMAC) will be measured by the ton in place.

327.8 PAYMENT:

The accepted quantities of pavement recycling will be paid at the contract unit price per square yard. Payment shall include cleaning the existing pavement surface and heating, scarifying, redistributing, leveling and compacting HMAC pavement.

Asphalt Recycling Agent will be paid for by the gallon used in place.

Hot Mix Asphalt concrete (HMAC) will be paid for by the ton used in place.

End of Section

SECTION 329

TACK COAT

329.1 DESCRIPTION:

Tack coat for bituminous paved surfaces shall consist of the application of emulsified asphalt as specified in Section 713.

329.2 PREPARATION OF SURFACE:

Surfaces to be treated shall be cleaned of all loose material as specified in Section 330.

329.3 APPLICATION:

Tack coat shall be diluted in the proportion of 50 percent water and 50 percent emulsion and applied at the rate of 0.05 to 0.10 gallons per square yard. Application shall be made in advance of subsequent construction as ordered by the Engineer.

329.4 EQUIPMENT:

Tack coat shall be applied by distributor trucks designed, equipped, maintained and operated in accordance with Section 330. Hand spray by means of hose or bar through a gear pump or air tank shall be acceptable for resurface work, corners or tacking of vertical edges. Care shall be taken to provide uniform coverage. Equipment that performs unsatisfactory shall be removed from the job.

329.5 PROTECTION FOR ADJACENT PROPERTY:

According to Section 333.

329.6 MEASUREMENT:

Bituminous emulsion that is diluted prior to application will be measured by the ton of diluted material. Any conversion from volumetric quantities shall be in accordance with Section 713.

329.7 PAYMENT:

Payment for the emulsified bituminous tack coat will be by the ton, diluted.

End of Section

SECTION 330

ASPHALT CHIP SEAL

330.1 DESCRIPTION:

This work shall consist of the application of a bituminous material followed by the application of a cover material.

330.2 MATERIALS:

330.2.1 Asphalt: The type of grade of the bituminous material will be specified in the contract documents.

Paving grade asphalt shall meet the requirements to Section 711.

Liquid Grade asphalt shall meet the requirements of Section 712.

Emulsified asphalt shall meet the requirements of Section 713.

330.2.2 Aggregate: The cover material (chips) shall meet the requirements of Section 716. Gradation of the chips shall be as specified in Table 716-1 or Table 716-2.

330.3 TIME OF APPLICATION AND WEATHER CONDITIONS:

Chip seal shall not be applied for at least 7 days after completion of new bituminous paving.

The chip seal shall be placed only when the roadway surface is dry and there is no imminent threat of rain. The ambient temperature must be at least 60°F. and rising.

Caution should be exercised in the placement of asphalt chip seal between the dates of Oct. 1 and April 1.

330.4 CONSTRUCTION METHODS:

330.4.1 Preparation of surfaces: Immediately before applying the bituminous material, the area to be surfaced shall be cleaned of dirt and other objectionable material. In urban areas, the surface shall be cleaned with a self-propelled pickup sweeper. In rural areas, power brooms may be used. When necessary, cleaning shall be supplemented by hand brooms.

The bituminous material shall not be applied until an inspection of the surface has been made by the Engineer and he has determined that it is suitable.

For chip seals using paving grade asphalt as the binder, a bituminous tack coat shall be applied prior to sealing. The tack coat shall comply with Section 329. The exact rate shall be determined by the Engineer.

330.4.2 Application of Bituminous Material: The bituminous material shall be applied as soon as possible after preparation of surfaces. At the time of application, temperatures of the asphalt shall be within the ranges specified in Table 330-1 and Table 330-2 or in Sections 711, 712 & 713 for each specified asphalt type. The Engineer may require a specific temperature within the ranges.

The quantity of liquid or emulsified asphalts will be between the range of 0.20 and 0.40 gals./sq. yd. The quantity of paving grade asphalt will be between the range of 0.17 and 0.31 gals./sq. yd. The exact rate of application will be determined by the Engineer.

The bituminous material shall be placed using a distributor as specified in Section 330. Application methods shall insure that a uniform distribution is obtained over the area to be sealed.

The chips shall be spread before the bituminous material sets. The maximum distance that the bituminous material is applied in advance of the chips will be determined by the Engineer.

TABLE 330-1

APPLICATION TEMPERATURES OF LIQUID ASPHALTS

All types of Liquid Asphalt	Distributor Application Temperature, Degree F.	
	Min.	Max.
70	105	175
250	140	225
800	175	255
3000	215	290

TABLE 330-2

APPLICATION TEMPERATURE OF EMULSIFIED ASPHALTS

Grade of Emulsified Asphalts	Distributor Application Temperature, Degree F.	
	Min.	Max.
RS-1, CRS-1, CRS-1h	75	140
RS-2, CRS-2, CRS-2h	125	185
SS-1, CSS-1	75	130
SS-1h, CSS-1h	75	130

The surfaces of structures, trees and shrubbery adjacent to the areas being seal coated shall be protected in such manner as to prevent their being spattered with bituminous material or marred. The Contractor shall be responsible for all damage to such structures or landscaping.

330.4.3 Application of Cover Material: Immediately following the application of the bituminous material, the chips shall be spread with a self-propelled mechanical spreader. The chip spreading equipment shall be capable of applying a uniform application of cover material. The self-propelled requirement may be waived for projects under 10,000 sq. yds.

At the time of application, precoated aggregate shall be within the temperature range of 250 degrees F. and 350 degrees F. measured at a point 6 to 12 inches below the top of the load.

At the time of application, uncoated chips shall not contain moisture in excess of a saturated, surface dry condition when liquid or paving grade asphalt are used as the seal coat binder.

At the time of application, chips shall be surface wet but free from running water when emulsified asphalt is used as the seal coat binder.

The precise application rate for cover material will be determined by the Engineer within the ranges of 15 to 25 lbs./sq. yd for the ¼ in. size and 20 to 30 lbs./sq. yd. for the ⅜ in. size.

When so directed by the Engineer and within 48 hours after application of the precoated chips, all chipped surfaces on major streets shall receive a flush coat in accordance to Section 333. The exact rate of application shall be as directed by the Engineer.

330.4.4 Rolling: Immediately following the application of the cover material, the surface shall be rolled with self-propelled pneumatic-tired rollers. Three coverages shall be made with a pneumatic roller. Each roller shall carry a minimum of 2,000 pounds on each wheel and a minimum of 60 psi in each tire. The roller shall not travel in excess of 12 miles per hour. A minimum of 3 self-propelled pneumatic rollers shall be required for projects over 10,000 sq. yds. On projects under 10,000 sq. yds., one roller may be used provided it performs the same number of coverages.

330.4.5 Joints: All joints shall be constructed as approved by the Engineer such that there be a uniform application of cover material and bituminous material.

330.4.6 Surplus Aggregate Removal: Surplus aggregate shall be removed from the surface using methods specified in subsection 330.4.1 and stockpiled in the location indicated on the plans or as directed by the Engineer. In no event shall surplus aggregate be left on the pavement for more than 1 day (24 hours).

330.4.7 Distributing Equipment: Distributor trucks shall be of the pressure type with insulated tanks. Gravity distributors will not be permitted.

Spray bars and extensions shall be of the full circulating type. The spray bar shall be adjustable to permit varying height above the surface to be treated.

The nozzle spacings, center to center, shall not exceed 6 inches. The valves shall be operated so that one or all valves may be quickly opened or closed in one operation. The valves which control the flow from the nozzles shall be of a positive acting design so as to provide a uniform, unbroken spread of bituminous material on the surface.

The distributor shall be equipped with devices and charts to provide for accurate, rapid determination and control of the amount of bituminous material being applied. The distributor shall be equipped with a tachometer of the auxiliary wheel type registering speed in feet per minute. The distributor shall also be equipped with pressure gauges and an accurate thermometer for determination of the temperature of bituminous material. The spreading equipment shall be designed so that uniform application of a bituminous material can be applied in controlled amounts ranging from 0.05 to 2.0 gallons per square yard. Transverse variation rate shall not exceed ten (10) percent of the specified application rate. The distributor shall be equipped with a hose and nozzle attachment to be used for spotting skipped areas and areas inaccessible to the distributor. Distributor and booster tanks shall be maintained as to prevent dripping of bituminous material from any part of the equipment.

Equipment that fails to perform satisfactorily shall be removed from the job.

330.5 TRAFFIC:

Traffic will not be permitted on the surface until the cover aggregate has set. Traffic control shall be in accordance with Section 401 as supplemented by the Contracting Agency.

When using paving grade or liquid grade asphalt chip seal, the speed limit must be maintained at 25 mph for all equipment and traffic until the cover material is swept.

When using emulsified asphalt chip seals, only emergency or local access traffic will be allowed until the seal coat has had time to set.

330.6 MEASUREMENT:

Certified weight slips of all material shall be delivered to the Engineer before the materials are applied. Certified weight slips of any material being weighed back in for credit shall be delivered to the Engineer the next day.

330.7 PAYMENT:

Quantities of materials for this work will be paid for at the contract unit price.

(A) Asphalt Cement, Liquid Asphalt, Emulsion, Diluted Emulsion	Ton
(B) Chips	Ton

There will be no payment for materials not placed in accordance with this specification.

End of Section

SECTION 332

ASPHALT EMULSION SLURRY SEAL COAT

332.1 DESCRIPTION:

The work covered by this specification consists of furnishing all labor, equipment, and materials necessary to perform all operations required for the application of a bituminous slurry surface.

NOTE . . . THESE SPECIFICATIONS DO NOT COVER THE APPLICATION OF COAL TAR SLURRY SEALS.

332.2 MATERIALS:

The bituminous material and mineral aggregate shall be as specified in Section.

332.3 DETERMINATION OF JOB MIX:

The job mixture shall be designed to provide a suitable surface for traffic conditions, climate and curing. All materials shall be pre-tested in a qualified laboratory to determine their suitability for use in the slurry seal. The Wet Track Abrasion Test (W.T.A.T.) will be used for design purposes to establish the mix design to be used in the specified slurry seal.

The test will show a maximum wear loss of 75 grams per square foot. Samples of materials to be used on the job shall be used to run the W.T.A.T. The test will be performed in accordance with ASTM D-3910 Design Testing and Construction of Slurry Seal.

332.3.1 Composition of Slurry Seal Mixtures: The job mixture shall conform to the requirements of the contract documents. The mixture shall attain an initial set in not less than 5 minutes nor more than one hour. In cases where the surface is not critical to be open to traffic, a longer set time may be allowed, however not to exceed 12 hours. The setting time may be required by the addition of approved mineral fillers or chemical agents. The mixture shall be one of three types whose combined aggregates conform to the gradation requirements of Table 715-1. The mixture shall be sufficiently free flowing to fill cracks in the pavement. The mixture shall not segregate during or after laydown. The mixture shall produce a skid-resistant surface.

332.3.2 Trial Applications: The Contractor shall place a test strip of 60 square yards in the area designated by the Engineer. The test section shall be placed using the same equipment and methods as will be used on the job. The slurry mixture placed in a test strip shall conform to the design mix as determined by the W.T.A.T. with minor variations to obtain crack filling, set time, pavement bond and a skid resistant texture. If the materials do not meet the requirements for fluidity, non-segregation, or surface texture, a new job mix shall be formulated and tested. Work shall not proceed before approval of design mix and acceptance following the placing of a test strip.

332.4 EQUIPMENT:

332.4.1 General: When requested by the Engineer, descriptive information on the slurry seal mixing and applications equipment to be used will be submitted for approval no less than 7 days before the work starts.

332.4.2 Self Contained Slurry Machine: The mixing machine will be a continuous flow type. It will be capable of accurately delivering a predetermined proportion of pre-wetted aggregate, mineral filler, water and asphalt emulsion to the mixing chamber and discharging the thoroughly blended mixture on a continuous basis. The mixing machine will be equipped with a mineral filler feeder. The feeder will have an accurate metering device or method to introduce a predetermined proportion into the mixer. The filler will be introduced into the mixing chamber at the same time and location as the aggregate.

The mixing machine will be equipped with a water pressure system and fog-type spray bar, adequate for complete water fogging of the surface to be sealed.

The mixing machine will be mounted on a truck or other vehicle capable of producing evenly controlled low rates of speed throughout the operation to insure the slurry is spread evenly and all cracks are filled.

332.4.3 Slurry Spreading Equipment: Attached to the mixer machine shall be a mechanical type squeegee spreader equipped with flexible material in contact with the surface to prevent loss of slurry from the distributor. It shall be maintained to prevent loss of slurry on varying grades and crown by adjustments to assure uniform spread. There shall be a steering device and a flexible strike-off. The spreader box shall have an adjustable width. The box shall be kept clean. Build-up of asphalt and aggregate on the box shall not be permitted. The use of burlap drags or other drags shall be approved by the Engineer.

332.4.4 Rollers: Rollers shall be approved by the Engineer.

332.4.5 Cleaning Equipment: Power brooms, pick-up brooms, air compressors, water flushing equipment, and hand brooms shall be suitable for cleaning the surface and cracks of the old surface.

332.4.6 Auxiliary Equipment: Hand squeegees, shovels, and other equipment shall be provided as necessary to perform the work.

332.5 PREPARATION OF THE SURFACE:

332.5.1 Immediately before applying the slurry, the area to be surfaced shall be cleaned of dirt, loose material, and other objectionable material. In urban areas, the surface shall be cleaned with a self-propelled pick-up sweeper. In rural areas, power brooms may be used. When necessary, cleaning shall be supplemented by hand brooms. Water flushing will not be permitted in areas where cracks are present in the pavement surface.

The slurry shall not be applied until an inspection of the surface has been made by the Engineer and he has determined that it is suitable.

332.5.2 Tack Coat: When specified, a tack coat shall be applied in accordance with Section 329 using the same type and grade of asphalt emulsion as specified for the slurry seal.

332.5.3 Water Fogging: When required by local conditions, the surface, directly ahead of the slurry box, shall be pre-wetted by fogging. The fogging shall be accomplished in such a manner that the entire surface is damp with no apparent flowing water or puddles.

332.6 COMPOSITION OF THE SLURRY MIX:

The amount of asphalt emulsion to be blended with the aggregate shall be that as determined by the W.T.A.T. after final adjustment in the field. A minimum amount of water shall be added as necessary to obtain a fluid and homogeneous mixture.

332.7 WEATHER LIMITATIONS:

The slurry seal shall not be applied unless the pavement temperature is at least 45°F. and rising. The mixture shall not be applied during unsuitable weather.

332.8 PROTECTION OF UNCURED SURFACE:

Adequate methods such as barricades, flagmen, pilot cars, etc., shall be used to protect the uncured slurry surface from all types of traffic.

332.9 MIXING AND APPLICATION:

The mixing time shall not exceed four minutes. Excessive mixing will not be allowed. The resulting mixture shall have the desired consistency, when placed on the surface. If breaking, hardening, segregation, balling or lumping occurs during the mixing process, the batch will be discarded.

A sufficient amount of slurry shall be carried in all parts of the spreader at all times so that a complete coverage is obtained.

No streaks caused by oversized aggregate shall be left in the finished surface. Build-up on longitudinal and transverse joints will be kept to a minimum. Approved squeegees shall be used to spread slurry in areas nonaccessible to the slurry mixer.

332.10 ROLLING:

As soon as the asphalt slurry has been set sufficiently to prevent any material from being picked up, it shall be rolled until all ridges have been ironed out and a uniform surface is obtained.

332.11 MEASUREMENT:

Quantities and materials for this work will be paid for at the contract price per unit of measurement for each of the following pay items as indicated in the proposal.

A.	Bituminous tack coat if specified	Ton (Diluted)
B.	Emulsified asphalt for slurry	Ton (Undiluted)
C.	Aggregate for slurry	Ton (Surface Dry)

End of Section

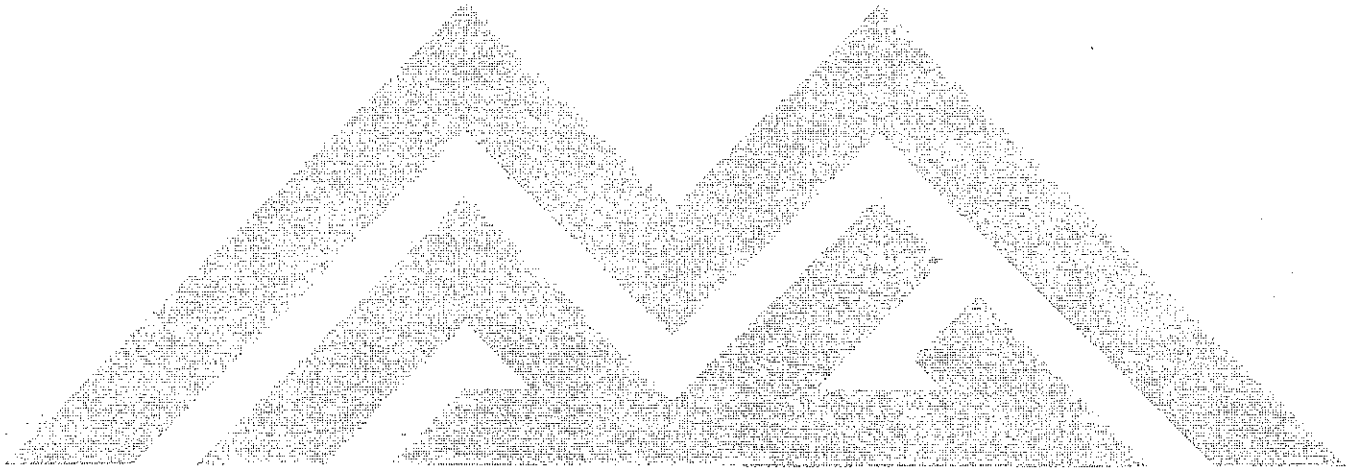

SECTION 333

FOG SEAL COATS

333.1 DESCRIPTION:

Fog seal coats on bituminous paved surfaces shall consist of the application of emulsified asphalt and a sand blotter when necessary.

333.2 TIME OF APPLICATION AND WEATHER CONDITIONS:

Fog seal coats on new pavements shall be applied within 24 hours. This time restriction may be extended by the Engineer.

Emulsified asphalt shall not be applied when the surface is wet or when there is a threat of rain. The ambient temperature shall be at least 50 degrees F. and rising and the application shall cease when the temperature is 55 degrees F. and falling.

333.3 MATERIALS:

333.3.1 Emulsified Asphalt: Unless otherwise specified in the special provisions, emulsified asphalt may be a grade SS-1h, CSS-1h, or CQSH, as specified in Section 713. The emulsified asphalt shall be diluted in proportions of 50% water and 50% emulsified asphalt.

333.3.2 Sand Blotter: The sand shall be as specified in Section 701 and shall be graded in accordance with Table 333-1.

TABLE 333-1

SAND BLOTTER GRADATION

Sieve Size	Percentage Passing (by weight)
3/8"	100%
No. 4	90-100%
No. 200	0-12%

333.4 TESTS, TEST REPORTS AND CERTIFICATIONS:

Asphalt emulsion shall meet requirements of Section 713.

Test reports and certifications shall be as specified in Section 711.

333.5 PREPARATION OF SURFACES:

Immediately before applying the emulsion, the area to be surfaced shall be cleaned of dirt and loose material by means of power brooms, or pick-up brooms supplemented by hand brooms if necessary. The fog seal shall not be applied until an inspection of the surfaces has been made by the Engineer and he has determined that the surfaces are suitable.

333.6 APPLICATION OF ASPHALT EMULSION:

The diluted material shall be well mixed before application. It shall be applied by a distributor truck equipped with fog nozzles at the approximate rate of 0.10 gallon per square yard. The exact rate shall be as directed by the Engineer. The distributor truck shall be as specified in Section 330.

333.7 SAND BLOTTER:

A sand blotter shall be applied as directed by the Engineer where there is an excess of asphalt emulsion. After the treated area has been opened to traffic, any excess asphalt emulsion that comes to the surface shall be immediately covered with additional sand.

333.8 PROTECTION FOR ADJACENT PROPERTY:

Care shall be taken to prevent the spraying of asphalt emulsion on adjacent pavements, including that portion of the pavement being used for traffic, on structures, guard rails, guide posts, markers, trees, shrubs, and property of all kinds.

333.9 PROTECTION OF TREATED SURFACE:

The treated surface shall be protected by barricades until the asphalt emulsion will not be picked up by traffic.

333.10 PAYMENT:

Payment for asphalt emulsion in place will be by the ton, diluted.

Payment for furnishing and applying sand blotter in place will be paid for by the ton.

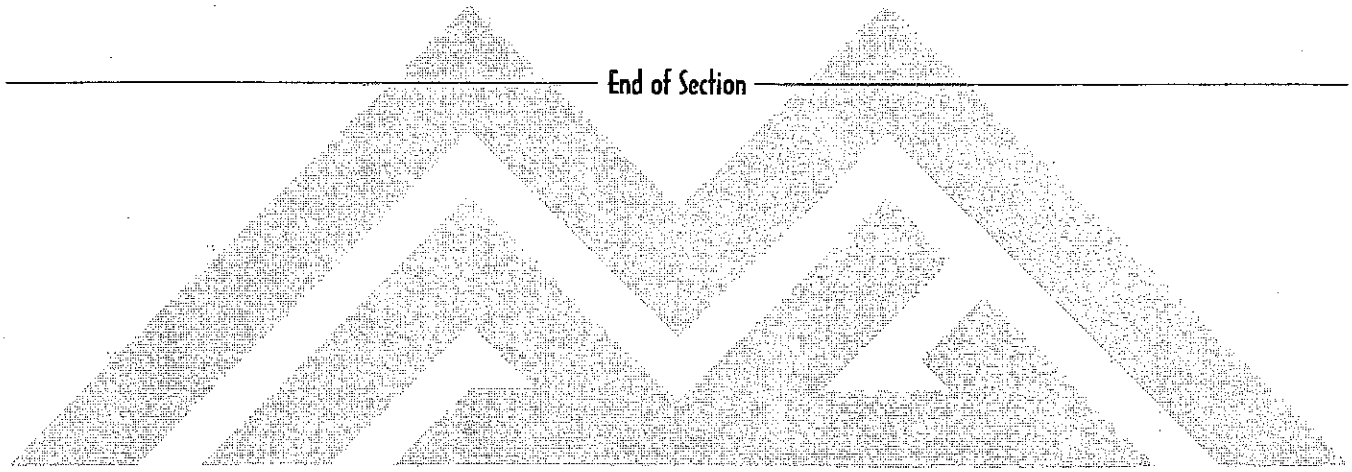

SECTION 334

PRESERVATIVE SEAL FOR ASPHALT CONCRETE

334.1 DESCRIPTION:

The asphalt concrete preservative seal shall be composed of a penetrating softening agent and sealant to rejuvenate and preserve the asphalt concrete pavement.

Preservative seals are applicable for new and existing asphalt pavements as directed on the plans, special provisions, or the Engineer.

334.2 MATERIALS:

The preservative seal shall be as specified in Section 718.

334.3 CONSTRUCTION METHOD:

The material shall be approved by the Engineer in accordance to this specification. The application rates, dilution and curing shall be directed by the Engineer in accordance with this specification.

The application rate will be based upon a typical surface condition test site with application rate trials to determine the needed rate. All application rates specified in Section 718 shall be a diluted 50-50 preservative seal and water, except as recommended by the manufacturer for Type D. Any over applied seal will be sanded as directed by the Engineer. Application equipment shall be in accordance with Section 330.

Before opening a treated area to traffic, the surface shall be checked for slipperiness and/or tackiness. If the treated portion of the roadway must be opened to traffic prior to the disappearance of slipperiness and/or tackiness, the surface shall be sanded with a minimum of 1½ pounds per square yard or as directed by the Engineer. Sand Blotter shall comply with Section 333.

334.4 MEASUREMENT:

Preservative seal for asphalt concrete will be measured by the gallon or ton applied including dilutent.

334.5 PAYMENT:

Payment will be made on the basis of the unit price bid in the proposal. Payment shall be full compensation for preservative seal complete and in place.

End of Section

SECTION 335

HOT ASPHALT-RUBBER SEAL

335.1 GENERAL:

This work shall consist of an application of a combined mixture of hot paving grade asphalt and ground tire rubber. It shall be immediately covered with a cover material.

The work involves furnishing and placing all materials on existing pavement surfaces in accordance with this specification.

This specification includes the two approved processes for the production of Asphalt-Rubber. Method A uses ground reclaimed vulcanized rubber and a extender oil. Method B uses ground reclaimed vulcanized rubber and a kerosene dilutent. Either method is acceptable based on proper compliance with the specifications and certifications of materials.

335.2 MATERIALS:

The asphalt, granulated rubber, extender oil, and kerosene shall comply with Section 717. Sand Blotter shall comply with Section 333. Cover material shall comply with Section 716 (PRECOATED). Tack coat shall comply with Section 329. Flush coat shall comply with Section 333.

335.2.1 Certification and Quality Assurance: Prior to application, the Contractor shall submit certification of compliance to the Engineer for all materials to be used in the work.

335.3 EQUIPMENT:

335.3.1 General: The method and equipment for combining the rubber and asphalt shall be so designed and accessible that the Engineer can readily determine the percentage by weight of each of two materials being incorporated into the mixture.

All equipment shall meet requirements of Section 330 with the following modifications:

(A) Pneumatic-tired rollers

At least three pneumatic-tired rollers shall be used. Each roller shall carry a minimum of 5,000 pounds on each wheel and a minimum of 90 psi in each tire. Rollers shall not travel in excess of 12 mph.

(B) Distributor

The distributor must be equipped with a mechanical mixing device.

335.3.2 Mechanical Pre-Blender: Rubber and the asphalt (and extender oil in Method A) for the asphalt-rubber blend may be pre-blended prior to introduction of the blend into the distributor.

The mechanical pre-blender shall be equipped with an asphalt totalizing meter in gallons and a flow rate meter in gallons per minute.

335.4 MIXING:

The percentage of rubber shall be 22% plus or minus 2% by Wt. of the total mixture. Mixing shall continue in the temperature range of 250 degrees F. to 450 degree F. until the consistency of the mixture approaches that of a semi-fluid material (i.e., reaction is complete). At the lower temperature, it will require approximately 30 minutes for the reaction to take place after the start of the addition of rubber. At the high temperature, the reaction will take place within approximately five minutes. Therefore, the temperature used will depend on the type of application and the methods used by the Contractor. Viscosity of the asphalt-rubber shall be more than 500 centipoises and less than 4000 centipoises at the time of application (ASTM D-2994). Application shall proceed immediately upon reaching the proper consistency.

335.4.1 Adjustment to Spraying Viscosity with Diluent: After the full reaction described in MIXING - Section 335.4 has occurred, the mix can be diluted with a kerosene type diluent. The amount of diluent used shall be less than 7.5 percent by volume of the hot asphalt rubber composition as required for adjusting viscosity for spraying or better wetting of the cover aggregate. Temperature of the hot composition shall not exceed the kerosene initial boiling point at the time of adding diluent.

335.5 CONSTRUCTION:

Prior to placing the hot asphalt-rubber seal coat, soil and other objectionable materials shall be removed from the pavement surface and a tack coat applied as specified in Section 329.

The application rate of the hot asphalt-rubber mixture shall be 0.55 to 0.65 gallons per square yard. Material shall be applied at temperatures of 375 degrees F. to 425 degrees F. for Method A and 300 degrees F. to 350 degrees F. for Method B. The application of the cover material shall follow as close as possible behind the distributor truck.

The cover material shall be preheated immediately prior to application and precoated as specified in Section 716 - PRECOATED. The temperature of the precoated chips shall be in accordance with Section 330.

Hot asphalt-rubber seal with hot precoated cover aggregate shall be placed only when the ambient temperature is at least 60 degrees F. and rising, on a dry surface and there is no imminent threat of rain.

The rate of application of the cover material shall be from 25 to 35 pounds per square yard for the ¼ inch nominal size or 30 to 40 pounds per square yard for the ⅜ inch nominal size as directed by the Engineer.

The rolling of the cover material shall proceed immediately after application in order to insure maximum embedment of the aggregate. Sufficient rollers shall be used for the initial rolling to cover the width of the aggregate spread with one pass. The first pass shall be made immediately behind the aggregate spreader. If the spreading is stopped for an extended period, the spreader shall be moved ahead or off to the side so that all cover material may be immediately rolled. Three (3) complete passes with rollers shall be made with all rolling completed within one (1) hour after the application of the cover material.

The Contractor shall sweep all joint edges clean of overlapping cover material prior to the adjacent application of asphalt-rubber material. Transverse joints shall be made by placing building paper over the ends of the previous applications. The joining application shall start on the building paper. Once the application process has progressed beyond the paper, the paper shall be removed and disposed of to the satisfaction of the Engineer. All reasonable precautions shall be taken to avoid skips and overlaps at joints and to protect the surfaces of adjacent structures, trees and shrubs, etc., from being spattered or marred. Correction of any such defects will be required at no additional cost to the Contracting Agency.

Traffic will not be permitted on the surface until the cover aggregate has set. Traffic control shall be in accordance with Section 401 as supplemented by the Contracting Agency.

At signalized intersections, an application of 2 to 5 pounds of sand per square yard shall be applied through the intersection and for a distance of 200 feet each way from the near curb returns after rolling and before opening a lane to traffic. Sand Blotter shall meet requirements of section 333.

After sweeping and prior to striping, a flush coat shall be applied to the asphalt-rubber treatment consisting of 0.05 to 0.10 gallons per square yard according to Section 333. The application of the flush coat may be delayed to facilitate curing or to avoid placement under unfavorable high temperature conditions.

Note: The flush coat shall not be applied to the area 200 feet either side of and through signalized intersections.

335.6 MEASUREMENT:

Certified weight slips of all materials shall be delivered to the Engineer before the materials are applied.

Certified weight slips of any bituminous material being weighed back in for credit shall be delivered to the Engineer for the next day.

Quantities of materials for this work will be paid for at the contract price per unit of measurement for each of the following pay items actually used on the project.

(A) Hot Precoated Chips	Ton
(B) Asphalt Rubber	Ton
(C) Emulsified Asphalt	Ton (diluted)
(D) Sand Blotter	Ton (surface dry)

335.7 PAYMENT:

Payment will be full compensation for furnishing and placing all materials specified and used, with no allowance for waste, and shall include labor, equipment, tools, and incidentals necessary to complete the work as prescribed and as directed by the Engineer.

Asphalt cement for precoating chips will be included in the price per ton for hot precoated chips.

No payment will be made for materials rejected due to improper placing, improper proportions of materials, or materials found to be defective.

End of Section

SECTION 336

PAVEMENT MATCHING AND SURFACING REPLACEMENT

336.1 DESCRIPTION:

Street and alley pavement and surfacing within the Contracting Agency's rights-of-way, removed by construction activities or to be widened or matched in connection with the improvement of Public Works, shall be placed as shown on the plans and applicable standard details, in accordance with this specification and/or the special provisions.

Asphalt concrete pavement replacement shall be constructed in accordance with Type A, B, D or E of standard details, as indicated on the plans, and as required by Sections 321 and 710.

Portland cement concrete pavement replacement shall be in accordance with Type C of the Standard Details, and as required by Sections 505 and 725.

ABC or decomposed granite surface replacement shall be constructed in accordance with Type F of standard details as indicated on the plans and in Section 702.

Temporary pavement replacement shall be constructed as required below.

Pavements to be matched by construction of new pavements adjacent to or at the ends of a project shall be saw cut in accordance with these specifications and where shown on the plans.

Pavement and surfacing replacement within ADOT rights-of-way shall be constructed in accordance with their permits and/or specification requirements.

336.2 MATERIALS AND CONSTRUCTION METHODS:

Materials and construction methods used in the replacement of pavement and surfacing shall conform to the requirements of all applicable standard details and specifications, latest revisions.

336.2.1 Pavement Widening or Extensions: Existing pavements which are to be matched by pavement widening or pavement extension shall be trimmed to a neat true line with straight vertical edges free from irregularities with a saw specifically designed for this purpose. The minimum depth of cut shall be 1½ inches or D/4, whichever is greater.

The existing pavement shall be cut and trimmed after placement of required ABC and just prior to placement of asphalt concrete for pavement widening or extension, and the trimmed edges shall be painted with a light coating of asphalt cement or emulsified asphalt immediately prior to constructing the new abutting asphalt concrete pavements. No extra payment shall be provided for these items and all costs incurred in performing this work shall be incidental to the widening or pavement extension.

The exact point of matching, termination, and overlay may be adjusted in the field, if necessary, by the Engineer or designated representative.

336.2.2 Pavement to be Removed: Existing asphalt pavement to be removed for trenches or for other underground construction or repairs shall be cut by a device capable of making a neat, straight and smooth cut without damaging adjacent pavement that is not to be removed. The Engineer's decision as to the acceptability of the cutting device and manner of operation shall be final. If saw cutting, only, is to be utilized, it will be so specified in the plans or special provisions.

Pavement replacement for cuts essentially parallel to the street centerline and greater than 50 feet in length shall be two course pavement replacement as hereinafter specified. For cuts greater than 600 feet in length the entire area shall then be seal coated in accordance with Section 330 (coated chips) or as otherwise specified. This seal coat shall extend from the edge of pavement or lip of gutter to the street centerline except that on residential streets less than 36 feet face to face of curb or where the pavement patch straddles the centerline, the entire width of street shall be seal coated.

In lieu of placing the seal coat as required above, the Contractor may deposit with the Contracting Agency for credit to the Street Maintenance Department, the sum of One Dollar per square yard of seal coat. The Street Maintenance Department will incorporate this work into their street maintenance program. The fee per square yard may be changed, as required to reflect changing costs, by the Contracting Agency upon 3 months advanced notification of the proposed change.

Pavement replacement for cuts parallel to the street centerline less than 50 feet in length, transverse cuts, bell holes and similar small areas shall match gradation and thickness of the existing pavement. These one course pavement patches shall be compacted with a vibratory roller to the same density specified for asphalt concrete pavements.

In lieu of cutting pipe trenches across driveways, curbs and gutters, sidewalks, alley entrances, and other types of pavements, the Contractor may, when approved by the Engineer, elect to tunnel or bore under such structures and pavements.

336.2.3 Temporary Pavement Replacement: Temporary pavement replacement, as required in Section 601 may be with cold-mix asphalt concrete of an MC-70 to MC-250 oil, with a minimum thickness of 2 inches, using aggregate grading in accordance with Section 710. The amount of liquid asphalt required will be 5.0 to 6.0 percent.

Temporary pavement replacement shall be used in lieu of immediate placement of single course permanent replacement or the first course of two course pavement replacement only on transverse lines such as spur connections to inlets, driveways, road crossings, etc., when required by the Engineer, by utilities or others who subcontract their permanent pavement replacement, under special prior arrangement; or for emergency conditions where it may be required by the Engineer. Temporary pavement replacement shall be placed during the same shift in which the backfill to be covered is completed.

Rolling of the temporary pavement replacement shall conform to the following:

(A) Initial or breakdown rolling shall be followed by rolling with a pneumatic-tired roller. Final compaction and finish rolling shall be done by means of a tandem power roller.

(B) On small areas or where equipment specified above is not available or is impractical, the Engineer will approve the use of small vibrating rollers or vibrating plate type compactors provided comparable compaction is obtained.

The surface of the temporary pavement shall be finished off flush with the adjacent pavement.

336.2.4 Permanent Pavement Replacement: Laying of single course or the base course of the asphalt concrete pavement replacement where a two course replacement is applicable shall never be more than 600 feet behind the ABC placed for the pavement replacement.

The trench must be compacted to its required density, and required ABC must be in place prior to the placement of the asphalt concrete.

Single course replacement shall consist of a 12.5 mm or 19 mm mix placed and finished as directed by the Engineer.

The base course of two course pavement replacement shall consist of a 19 mm mix in accordance with Section 710.

Where the base course is to be placed with non-compactive equipment, it shall be not less than 2 inches in thickness and the material shall be immediately rolled with a pneumatic-tired roller. The surface course shall be of sufficient depth to provide the total required compacted thickness of the two courses, but not more than 1 inch.

Where the trench is 6 feet or more in width, all courses, single or both courses of the two course pavement replacement, shall be laid with a self-propelled compacting, spreading equipment. When the trench is from 6 to 8 feet in width, the self-propelled compacting, spreading equipment shall not be wider than 8 feet. All courses, except the surface course, shall be of a compacted thickness of not less than 1½ inches.

The surface course shall consist of a 9.5 mm mix in accordance with Section 710 as specified by the Engineer to match the existing surface. The surface course shall not be placed sooner than 2 weeks after the base course, except where the trench crosses a signalized intersection. In this case the surface course shall be placed within 48 hours, or the crossing pavement replacement shall be single course as specified above.

Placement of the surface course is to be by means which will result in a surface texture satisfactory to the Engineer, and flush with the existing pavement.

Where deep lift asphalt concrete (asphalt concrete base and asphalt concrete wearing course) exists, the base course replacement shall be made in lifts not exceeding 6 inches in compacted thickness to within ½ inch of the finish grade.

336.3 TYPES AND LOCATIONS OF PAVEMENT AND SURFACING REPLACEMENT:

Normally, the type of pavement replacement and backfill required will be noted on the plans or specified in other portions of the contract documents and construction will be in accordance with Detail 200. This detail requires that a 12-inch "T" Top be utilized when normal traffic flow is perpendicular to any one of the four sides of the trench excavation. Therefore, Type A pavement replacement will require a "T" Top whenever the trench crosses a street or goes through an intersection and at the end(s) if they terminate in the street. Type B pavement replacement will require the "T" Top on the sides that are perpendicular to normal traffic flow.

If a type is not noted on the plans or specified in the special provisions, the following criteria will govern:

Type A pavement replacement, including the "T" Top, will be utilized on all streets where the excavation is parallel to the centerline of the street.

Type B pavement replacement, including the "T" Top, will be utilized on all streets where the excavation is transverse to the centerline of the street.

Type C pavement replacement will be used to match existing portland cement concrete pavement.

Type D pavement replacement may be used when the condition of the existing pavement does not justify construction of Type A or B. Prior written approval of the Engineer is required.

Type F pavement replacement will be utilized to match existing ABC or decomposed granite roadways.

Where a longitudinal trench is partly in pavement, the pavement shall be replaced to the outside edge of the existing pavement, on a straight line, as indicated on the plans. Measurements for payment shall be from the inner limit of pay width allowed below, to the outside edge of the existing pavement as defined herein.

Where no part of a trench is in pavement, surfacing replacement will only be specified where existing surfacing materials have been removed.

When a trench cut is in aggregate surfaced area, the surfacing replacement shall be of a like type and depth as the existing material, compacted to the densities required in Section 601.

336.4 Measurement:

Measurement for payment and surfacing replacement shall be by the square yard, based upon actual field measurement of the area covered except as noted below.

(A) In computing pay quantities for replacement Types A, B, and F, pay widths will be based on the actual field measured width, however the boundaries of the measurement will not extend further than 1/2 the distance, either side, from the centerline of the pipe as depicted on Table 601-1, Maximum Width At Top Of Pipe Greater Than O.D. Of Barrel.

(B) In computing pay quantities for replacement Types C, D, E, and T, pay widths will be based on the actual field measured width, however the boundaries of the measurement will not extend further than 1/2 the distance plus 12 inches, either side, from the centerline of the pipe as depicted on Table 601-1, Maximum Width At Top Of Pipe Greater Than O.D. Of Barrel.

(C) Where a longitudinal trench is partly in pavement, computations of pay quantities shall be based on the limitations specified above.

(D) The length of pavement and surfacing replacement shall be measured through any manhole, valve box, or other structure constructed in the pipe line, and any pavement or surface replacement and/or seal treatment in excess of the above pay widths shall be considered and included in the bid item for such structure.
(E) Any pavement replacement in excess of the specified pay widths necessitated by the installation of valves, tapping sleeves and valves, valve by-passes, and concrete thrust blocks shall be included in the bid price for these items.

(F) When special provisions allow deviations from the trench widths specified in Section 601, the above allowed pay widths for pavement replacement may be altered where so specified.

(G) Measurement of pavement and surfacing replacement shall be made along the finished surface of the ground to the nearest foot, and shall be computed to the nearest square yard.

336.5 PAYMENT:

Direct payment for pavement or surfacing replacement will be made for replacement over all pipe trench cuts except as otherwise allowed in the special provisions. Payment for replacements over other work shall be included in the cost of constructing that work, in accordance with the applicable standard details and specifications.

Payment for temporary pavement replacement shall be included in the cost of the pipe.

When a Contractor has the option of either jacking and/or boring or opencut construction, and elects to construct a pipeline by the jacking and/or boring method, he will be paid for the replacement of such items of work as pavement, curb and gutter, sidewalk, driveway, and alley entrances, as allowed for opencut construction.

End of Section

SECTION 340

CONCRETE CURB, GUTTER, SIDEWALK, DRIVEWAY AND ALLEY ENTRANCE

340.1 DESCRIPTION:

The various types of concrete curb, gutter, sidewalk, driveways, and alley intersections shall be constructed to the dimensions indicated on the plans and standard detail drawings. Joints shall be designated as expansion joints or contraction joints and shall be constructed as per Subsection 340.3.

340.2 MATERIALS:

Concrete shall be class B, conforming to the applicable requirements of Section 725.

Expansion joints filler shall comply with Section 729.

340.3 CONSTRUCTION METHODS:

Existing pavements and concrete, that are joined by new construction, shall be cut in accordance with Section 601.

The subgrade shall be constructed and compacted true to grades and lines shown on the plans and as specified in Section 301. All soft or unsuitable material shall be removed to a depth of not less than 6 inches below subgrade elevation and replaced with material satisfactory to the Engineer. When the Engineer determines that the existing subgrade consists of soils with swelling characteristics, the moisture content shall be brought as close as possible to the optimum required for compaction. This shall be done by the addition of water, by the addition and blending of dry suitable material or by the drying of existing material. The subgrade shall then be compacted to a relative density of 75% minimum to 85% maximum with 80% as ideal.

Material displaced in the construction shall not be placed on the base and/or surfacing material already in place on the roadway nor shall the excavated material be placed in such a manner as to interfere with access to property or traffic flow in the street.

Concrete sidewalks and driveways which are necessarily disturbed by construction shall be removed to a distance required to maintain a slope as indicated by standard details or not to exceed 1 inch per foot where sidewalks are concerned. Sawcutting is required at the match lines and payment will be made under the respective pay items as provided in the proposal.

Concrete curbs, gutters and sidewalks shall be constructed by the conventional use of forms, or may be constructed by means of an appropriate machine when approved by the Engineer.

If machines designed specifically for such work and approved by the Engineer are used, the results must be equal to or better than that produced by the use of forms. If the results are not satisfactory to the Engineer, the use of the machine shall be discontinued and the Contractor shall make necessary repairs at his own expense. All applicable requirements of construction by use of forms shall apply to the use of machines.

Forms conforming to the dimensions of the curb, gutter, sidewalk, driveway, and alley entrance shall be carefully set to line and grade, and securely staked in position. The forms and subgrade shall be watered immediately in advance of placing concrete.

Forms shall be thoroughly cleaned each time they are used, and shall be coated with a light oil, or other releasing agent of a type which will not discolor the concrete.

The concrete shall be thoroughly spaded away from the forms so that there will be no rock pockets next to the forms. The concrete may be compacted by mechanical vibrators approved by the Engineer. Tamping or vibrating shall continue until the mortar flushes to the surface, and the coarse aggregate is below the concrete surface.

Expansion joints, unless otherwise specified, shall be constructed in accordance with the standard details of the appropriate agency, and in a straight line and vertical plane perpendicular to the longitudinal line of the sidewalk or curb and gutter, except in cases of curved alignment, when they will be constructed along the radial lines of the curve. They shall be constructed to the full depth and width of the concrete and shall match the joints in the adjacent pavement sidewalk or curb and gutter. Joints shall be constructed at all radius points, driveways, alley entrances, and at adjoining structures with a maximum interval of 100 feet between joints.

Contraction joints, unless otherwise specified, shall be constructed in accordance with the standard details, and in a straight line and vertical plane perpendicular to the longitudinal line of the sidewalk or curb and gutter, except in cases of curved alignment when they will be constructed along the radial lines of the curb.

Sidewalk score marks, unless otherwise specified, shall be constructed in accordance with the standard detail.

All edges shall be shaped with a suitable tool so formed as to round the edges to a radius as indicated on the standard details.

The front face form shall not be removed before the concrete has taken the initial set and has sufficient strength to carry its own weight, gutter forms and rear forms shall not be removed until concrete has hardened sufficiently to prevent damage to the edges. Special care shall be taken to prevent any damage. Any portion of concrete damaged while stripping forms shall be repaired or if the damage is severe, replaced at no additional cost to the Contracting Agency. The face, top back, and flow line of the curb and gutter shall be tested with a 10-foot straightedge or curve template, longitudinally along the surface. Any deviation in excess of ¼ inch shall be corrected at no additional cost to the Contracting Agency.

The surface of concrete sidewalk shall be tested with a 5-foot straightedge. Any deviation in excess of ⅛ inch shall be corrected at no additional cost to the Contracting Agency.

When required by the Engineer, gutters having a slope of 0.8 foot per hundred feet or less, or where unusual or special conditions cast doubt on the capability of the gutters to drain, they shall be water tested. Water testing shall consist of establishing flow in the length of gutter to be tested by supplying water from a hydrant, tank truck or other source. One hour after the supply of water is shut off, the gutter shall be inspected for evidence of ponding or improper shape. In the event water is found ponded in the gutter to a depth greater than ½ inch, or on the adjacent asphalt pavement, the defect or defects shall be corrected in a manner acceptable to the Engineer without additional cost to the Contracting Agency.

Any section of the work deficient in depth or not conforming to the plans or specifications shall be removed and replaced by the Contractor at no additional cost to the Contracting Agency.

Finishing and curing of the concrete shall be done in the manner specified in Section 505.

The Contractor shall stamp his name and year on all work done by him, on each end of the curb, gutter, or sidewalk. The letters shall not be less than ¾ inch in height.

340.4 BACKFILLING:

Unless otherwise specified the Contractor shall backfill behind the curbs or sidewalks with soil native to the area to the lines and grades shown on the plans.

340.5 MEASUREMENT:

Concrete curbs and gutters of the various types shown on the plans and in the proposal, will be measured along gutter flow line through inlets, catch basins, etc., by the lineal foot to the nearest foot for each type, complete in place.

Concrete sidewalks, driveways, alley intersections, valley gutters and aprons will be measured to the nearest square foot complete in place. When concrete sidewalk, driveways, alley intersections, valley gutters, and/or aprons are cut during trenching operations, the square foot measurement for payment will be in accordance with Section 336.

340.6 PAYMENT:

Payment for the above named items will be made in accordance with the unit prices or lump sums as set forth in the proposal. Such payment shall include full compensation for furnishing all labor, material, tools and equipment and accomplishing all work in conformance with the contract documents.

End of Section

SECTION 341

TERRAZZO SIDEWALKS

341.1 DESCRIPTION:

Terrazzo consists of a mixture of grey or white portland cement, cement color pigments, abrasive aggregate and colored marble chips, with the surface ground to finish grade so as to expose approximately 75 percent of the marble granules.

Cement and concrete shall be in accordance with Section 725.

All applicable portions of Section 340 for construction of concrete sidewalks shall be adhered to.

The Contractor shall furnish all equipment, labor, materials, tools, services, transportation and incidentals necessary to construct a sidewalk with a terrazzo surface course.

341.2 MATERIALS AND COMPOSITION:

Divider strips shall be of half-hard brass, white metal 99 percent zinc or alloy. The strips shall have a minimum thickness of ⅛ inch and shall be provided with proper anchoring devices. Pre-assembled decorative units may be used. Double divider strips or metal expansion joints shall be used in the terrazzo course directly above the expansion joints in the concrete base or slab.

Cement mortar colors shall be lime-proof non-fading pure mineral pigments.

Abrasive aggregate shall consist of alundum or other approved lime-proof abrasive.

Marble chips shall be of an exterior grade marble that will not weather nor discolor. The granule shall be of such proportions of size Nos. 1, 2, 3 as shall be hereafter determined. Samples of the terrazzo shall be made for approval of the Engineer.

Composition of the terrazzo shall be in the proportion of 200 pounds of marble aggregate to 100 pounds of gray or white portland cement, mixed dry. The marble aggregate shall consist of 4 parts of marble chips, and cement color pigments to 2 parts of abrasive aggregate.

(A) Add sufficient water to make the mixture plastic but not flowing, a water to cement ratio 0.44 to 0.49.

(B) All materials, including water shall be mixed in a mechanical mixer or in a mortar box for not less than 2 minutes. Only amounts shall be mixed which can be placed immediately.

341.3 CONSTRUCTION METHODS:

Concrete base or slab shall be of Class B concrete, 4 inches thick, and reinforced with 6 x 6 inch No. 10 gage wire mesh fabric.

(A) The concrete base shall be separated from the natural ground surface by overlapping 15 pound asphalt impregnated roofing felt, plastic sheeting or other approved water-proofing material. In areas having excessive rise of ground water, the edges of the concrete shall also be water-proofed.

(B) Where a pitch in the finished surface is required, the concrete slab shall be pitched to the required degree.

(C) Premolded expansion joints of the type designated in Section 729, shall be placed in the concrete base or slab at 20 foot intervals and also against buildings and curbs. Double divider strips or metal expansion joints are to be used in the terrazzo course directly above the expansion joints in the concrete base slab.

(D) The top of the base slab shall be broom finished to leave a slightly roughened surface to insure a bond between the concrete and the terrazzo finish.

(E) While the base slab is still in a semi-plastic state, the divider strips shall be placed. The divider strips will form panels not more than 3 feet on a side. Where an expansion joint occurs in the concrete base or the type of construction changes, always use a divider.

(F) The concrete slab shall be cured according to the requirement of Section 505.

Bond between concrete base and terrazzo course: Before the terrazzo Contractor installs his work, he must see that the surface of the concrete slab is thoroughly cleaned of plaster droppings, wood chips, and all other debris. He should thoroughly slush it with neat cement grout to insure a good bond.

341.3.1 Installation: Place the terrazzo mix in the spaces formed by the divider strips in such a manner that the marble chips match the chosen pattern in the National Terrazzo and Mosaic Association, Inc. catalog. The mix shall be rolled into a compact mass by means of heavy stone or metal rollers until the superfluous cement and water is extracted, after which it must be hand troweled to an even surface, disclosing the lines of the divider strips on a level with the terrazzo finish.

The finished course shall show at least 75 percent of marble granules and shall not vary in any direction more than ⅛ inch when tested with a 10 foot straightedge. The thickness of the terrazzo course shall be 2 inches. The temperature of the mix at time of placing shall be between 60° and 80°F. and shall be maintained above 70°F. for at least 3 days or above 50°F. for at least 5 days when using normal portland cement.

341.3.2 Curing: The terrazzo course must be cured by keeping it moist for at least 6 days by wet sand, paper, or curing mats.

341.3.3 Surfacing: When the terrazzo work has set sufficiently hard, it shall be machine rubbed, using No. 24 grit or finer abrasive stones for the initial rubbing. It shall then be resurfaced using a No. 80 grit or finer abrasive stone, after which a light grouting of neat portland cement of the same kind and color as the matrix shall be applied to the surface, filling all voids. The grouting shall then remain until the time of final cleaning. All grinding shall be done in the presence of an excess of water.

341.3.4 Finishing: The grouting shall be removed by machines, using a stone not coarser than No. 80 grit. This cleaning for fine-stoning shall not take place sooner than 7 days after the surface has been grouted, after which it must be cleaned thoroughly.

341.3.5 Sealing: After cleaning and drying, seal the terrazzo surface with one coat of Hornlux or other sealer approved by the National Terrazzo and Mosiac Association, Inc.

341.4 MEASUREMENT:

Terrazzo sidewalk will be measured to the nearest square foot complete in place.

341.5 PAYMENT:

Payment will be made at the unit price bid per square foot, and shall be compensation in full for all construction equipment, labor, materials, plant, services, transportation, and all incidentals necessary to construct a sidewalk with a terrazzo surface course.

End of Section

SECTION 342

DECORATIVE PAVEMENT
CONCRETE PAVING STONE OR BRICK

342.1 GENERAL:

The Contractor shall furnish all the necessary labor, material, tools and equipment to complete the proper installation of either the concrete paving stone pavement or the brick pavement. This includes furnishing a 10-foot straightedge to accomplish the level test specified for the aggregate base course and the finished decorative pavement.

The decorative pavement shall be true as to line and grade and installed to coincide and align with the adjacent work elevation. All edges shall be retained to secure the perimeter and sand laying course.

The Contractor shall construct a 10-foot square sample area which will be inspected and approved by the Engineer prior to any other decorative pavement placement. Decorative pavement under this specification is not intended for use in areas subject to vehicular traffic.

342.2 MATERIALS:

342.2.1 Sand Aggregate Base Course: The sand shall be a clean washed sand conforming to ASTM C-144 (Mortar Sand). The ABC shall be aggregate base as per Table 702-1.

342.2.2 Concrete Paving Stones: The concrete paving stones shall be as per ASTM C-936 which requires a compressive strength of 8000 psi. The size, shape, design and color shall be as noted in the Contract Documents. The Contractor shall submit two samples of the whole paving stone and the matching precast edge unit to the Engineer for approval prior to any work.

342.2.3 Brick: The color shall be as designated in the Contract Documents. The Contractor shall submit two samples of the brick to the Engineer for approval prior to any work.

342.2.4 Header: The header shall be Class B concrete as per Section 725.

342.3 CONSTRUCTION PROCEDURES:

342.3.1 Aggregate Base Course: The aggregate base course shall be compacted to a minimum of 90% density. The elevation of the ABC shall be the thickness of the paving stones or bricks plus the 1-inch sand laying course below the desired finished elevation of the decorative pavement. The surface of the ABC shall be tested with the 10-foot straightedge and shall not vary more than ±⅛-inch in 10 feet.

342.3.2 Concrete Work or Edge Retention: The concrete retention curbs, precast edge unit, etc., shall be straight and set to final grade.

342.3.3 Sand Laying Course: The maximum thickness of the sand course shall be 1 inch. Screeding boards shall be used to ensure a uniform thickness. The sand shall not be compacted, walked on or wet down. The sand course shall be treated with a preemergent herbicide, such as Surflan, or equal. The application of the herbicide shall be made not earlier than 4 hours prior to actual placement of the decorative pavement.

342.3.4 Concrete Paving Stones: The concrete paving stones shall be installed hand-tight and level on the undisturbed sand course in a manner that eliminates gaps between the stones and the edge retention material. After the stones are in place, a roller or plate vibrator shall be used to compact the stones. This will require two passes at 90 degrees to each other. After the operation, approximately ¼-inch of the mortar sand will be placed on the stones and one pass with a vibrator is required. Any excess sand shall be swept into the joints or removed. The completed installation shall be washed down and cleaned. Any cutting of the pavement stone shall be accomplished with a saw.

The Contractor shall lay the paving stones starting from the longest straight line and from a true 90 degree corner. When the installation is along a frontage road, the installation shall start on the major street side and along a side perpendicular to the frontage road. Along the frontage road edge, when the space between the stone and the curb is 1 inch or less, this space may be filled with matching colored concrete.

Any broken or damaged paving stones shall be removed and replaced. They shall be tamped into place and the joints filled with mortar sand.

342.3.5 Brick: The brick shall be installed in a perpendicular pattern to the roadway, hand-tight and level on the undisturbed sand course. After the bricks are in place, a roller or plate vibrator shall be used for compaction. This will require two passes at 90 degrees to each other. After this operation, approximately ¼-inch of mortar sand will be placed on the bricks and one more pass with the vibrator is required. Any excess sand shall be swept into the joints or disposed of. The completed installation shall be washed down and cleaned.

Any broken or damaged bricks shall be removed and replaced. They shall be tamped into place and the joints filled with mortar sand.

342.4 MEASUREMENT AND PAYMENT:

Measurement will be by the square foot. Payment will be made at the unit bid price per square foot. This payment shall be full compensation for all labor, materials, tools and equipment required to complete the work.

End of Section

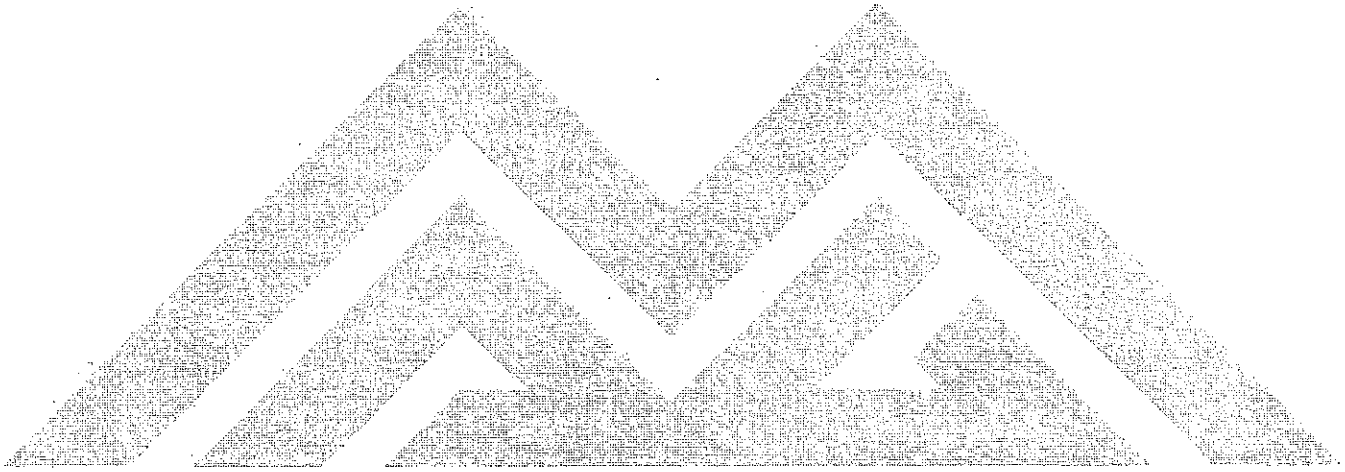

SECTION 343

EXPOSED AGGREGATE PAVING

343.1 DESCRIPTION:

Exposed aggregate paving consists of placing a concrete slab with exposed aggregate in the surface of the finished concrete. This exposed aggregate paving is designed for decorative or pedestrian use only. It should not be used in areas subject to vehicular traffic.

343.2 MATERIAL:

343.2.1 Concrete: Concrete shall be Class A per Section 725 with a maximum slump of 3 inches.

343.2.2 Exposed Aggregate: The exposed aggregate shall be uncrushed riverrun rocks. The Contractor shall provide at least a 10-pound sample for approval by the Engineer prior to any aggregate paving.
(A) When the paving is for decorative use only, no pedestrian traffic, the aggregate shall not be larger than 3 inches or smaller than 1½ inches.

(B) When the paving is to be used for pedestrian traffic, the aggregate shall be not larger than 2 inches or smaller than 1 inch.

343.3 CONSTRUCTION PROCEDURE:

The Contractor shall construct a sample panel 3 feet by 3 feet for inspection and approval by the Engineer, prior to actual construction. When approved, this panel shall be used as a standard for the remainder of the work.

After the slab has been placed, screeded and darbied, the aggregate shall be hand-scattered so that the entire surface is evenly covered. The surface shall be reworked so that the aggregate will be embedded just beneath the surface. The concrete shall completely surround and lightly cover the aggregate leaving no holes or voids.

A non-staining surface retarder will be applied to provide a surface penetration of at least ⅛-inch and the surface will be lightly screed to ensure penetration. The surface will be covered with a protective material for the period of time recommended by the retarder manufacturer. After this time has elapsed, the upper, retarded layer of concrete will be removed using a water jet stream and a brush. The protective cover will be replaced and the concrete allowed to cure. After curing, the surface shall be cleaned and a silicone seal applied.

343.4 Measurement and Payment: Measurement will be by the square foot. Payment will be made at the unit bid price per square foot. This price shall be full compensation for all labor, material, tools, and equipment required to complete the work.

End of Section

SECTION 345

ADJUSTING FRAMES, COVERS, VALVE BOXES AND WATER METER BOXES

345.1 DESCRIPTION:

The Contractor shall furnish all labor, materials, and equipment necessary to adjust all frames, covers and valve boxes as indicated on the plans or as designated by the Engineer. The frames shall be set to grades established by the Engineer, in a manner hereinafter specified.

The Contractor may elect to remove old frames, covers and valve boxes and to install new frames and/or boxes without any additional cost to the Contracting Agency, in accordance with standard detail drawings.

345.2 ADJUSTING FRAMES:

The Contractor shall loosen frames in such a manner that existing monuments, clean outs or valve boxes will not be disturbed or manholes damaged. Debris shall not be permitted to enter sanitary or storm sewer conduits. All loose material and debris shall be removed from the excavation and the interiors of structures prior to resetting frames.

Frames shall be set to the elevations and slopes established by the Engineer and shall be firmly blocked in place with masonry or metal supports. Spaces between the frame and the old seat shall be sealed on the inside to prevent any concrete from entering the hand hole or manhole. Class B concrete shall be placed around and under the frames to provide a seal and properly seat the frame at the required elevation and slope. Concrete shall be struck off flush with the top of the existing pavement or in accordance with the standard details.

345.3 ADJUSTING VALVE BOXES:

Valve boxes shall be adjusted to the new elevations indicated on the plans, or as established by the Engineer.

Adjustable cast iron boxes shall, if possible, be brought to grade by adjustment of the upper movable section. Any excavated area shall be filled with Class B concrete to the level of the existing pavement, or as directed by the Engineer.

Concrete pipe valve boxes in areas not subject to vehicular traffic shall be adjusted to grades by installing a suitable length of metal or concrete pipe, of the same inside diameter as the present valve box, and reinforcing the outside with a concrete collar extending from at least 2 inches below the joint up to and flush with the top of the valve box extension. This collar shall be of Class B concrete. The dimension from the outside of the box to the outside of the collar shall not be less than 2 inches. This adjustment will be known as Type B.

In areas subject to vehicular traffic and where the existing valve box is a Type B, the adjustment to the new elevation shall be made using the old cover and installing a new 8 inch frame in accordance with the standard detail for installation of valve boxes in vehicular traffic areas. This adjustment shall be known as Type BA.

Adjustment of existing Type A valve boxes to the new elevations shall be as described in Subsection 345.2 above. This adjustment shall be known as Type A.

345.4 MEASUREMENT:

The quantities measured will be the actual number of frames, covers and valve boxes of each type, adjusted and accepted.

345.5 PAYMENT:

The quantities, as determined above will be paid for at the contract price per unit of measurement respectively, for each of the particular items listed in the proposal. The payment shall be compensation in full for all materials, labor, equipment and incidentals necessary to complete the work.

End of Section

SECTION 350

REMOVAL OF EXISTING IMPROVEMENTS

350.1 DESCRIPTION:

This work shall consist of removal and disposal of various existing improvements, such as pavements, structures, pipes, curbs and gutters, and other items necessary for the accomplishment of the improvement.

350.2 CONSTRUCTION METHODS:

The removal of existing improvements shall be conducted in such a manner as not to injure utilities or any portion of the improvement that is to remain in place. See Section 107.

Sidewalks shall be removed to a distance required to maintain a maximum slope for the replaced portion of sidewalk, for one inch per foot and all driveways shall be removed to a distance as required by standard details.

Existing concrete driveway curbs and gutters shall be removed to the right-of-way line and the new end of curb faced.

Portland cement concrete pavements, curbs and gutters and sidewalks designated on the plans for removal shall be saw-cut at match lines, in accordance with Section 601 and removed.

Asphalt concrete pavements designated on the plans for removal shall be cut in accordance with Section 336.

Removal of trees, stumps, irrigation structures, storm water inlets, headwalls and other items in the right-of-way shall be done in accordance with Section 201.

Backfill and compaction of all excavated areas shall be compacted to the densities as prescribed in Section 601.

All surplus materials shall be immediately hauled from the jobsite and disposed of in accordance with Section 205.

350.3 MISCELLANEOUS REMOVAL AND OTHER WORK:

This work shall include, but not be limited to the following, where called for on the plans.

(A) Relocate existing fence and gate.

(B) Remove and reset mail boxes.

(C) Remove signs and bases in right-of-way.

(D) Remove planter boxes, block walls, concrete walls, and footings.

(E) Install plugs for pipes and remove existing plugs as necessary for new construction.

(F) Remove wooden and concrete bridges.

(G) Remove median island slabs.

(H) Remove pavements and aggregate base where called for outside the roadway prism.

350.4 PAYMENT:

Payment for removals will be made at the unit bid prices bid in the applicable proposal pay items, which price shall be full compensation for the item complete, as described herein or on the plans.

End of Section

SECTION 360

TELECOMMUNICATIONS INSTALLATION

360.1 DESCRIPTION:

This work shall consist of the installation of underground telecommunications facilities within the public right-of-way.

360.2 TRENCHING, BACKFILL AND RESTORATION:

All work shall be done in accordance with Section 601.

360.3 CABLE INSTALLATION:

(A) "Trunk Lines" Cable providing telecommunications service by connecting regions or states or by connecting central offices within a metropolitan area. Such cable shall be installed as described below:

1. If the cable is to be installed within an open trench, the cable shall be placed within schedule 40 PVC conduit or equal with a minimum inside diameter of 4 inches. The conduit shall be buried at a minimum depth of 48 inches below finished grade measured to the top of the conduit. A color coded plastic warning tape with a minimum thickness of 5 mil and a minimum width of 3 inches shall be installed in the trench and centered over the PVC conduit at a depth of from 18 to 30 inches below finish grade.

2. Cable crossings under existing paved streets shall be accomplished by jacking or boring unless open trenching is authorized by the Engineer or Agency. The cable shall be placed within a schedule 40 PVC conduit or better at a minimum depth of 48 inches.

(B) Telecommunications cables other than "trunk lines" shall be installed as described below.

1. If a cable is to be installed within the right-of-way of an arterial or collector street, it shall be placed at a minimum depth of 36 inches below finished grade. A color coded plastic warning tape as described in "A" shall be placed 18 inches below the surface.

2. If a cable is to be installed within the right-of-way of a local/residential street it shall be placed at a minimum depth of 24 inches below finished grade.

3. Cable crossings under existing, paved streets shall be accomplished by jacking or boring unless open trenching is authorized by the Engineer or Agency.

360.4 CABLE LOCATING (FIBER OPTIC):

If a cable which is to be installed is fiber optic a tracing or locating wire shall be installed with the cable.

360.5 PAYMENT:

Payment will be made at the contract unit price bid per lineal foot.

End of Section

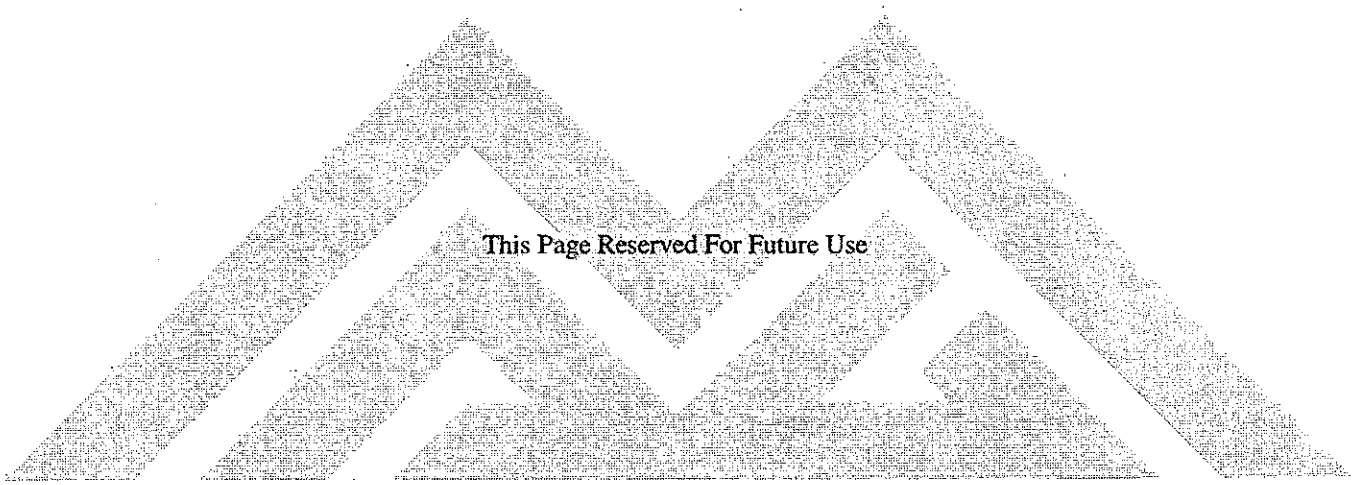

This Page Reserved For Future Use

PART 400

RIGHT-OF-WAY AND TRAFFIC CONTROL

Section	Title	
401	Traffic Control	401-1
405	Monuments	405-1
410	Precast Safety Curbs	410-1
415	Flexible Metal Guardrail	415-1
420	Chain Link Fences	420-1
424	Parkway Grading	424-1
425	Topsoils	425-1
430	Landscaping and Planting	430-1
440	Sprinkler Irrigation System Installation	440-1

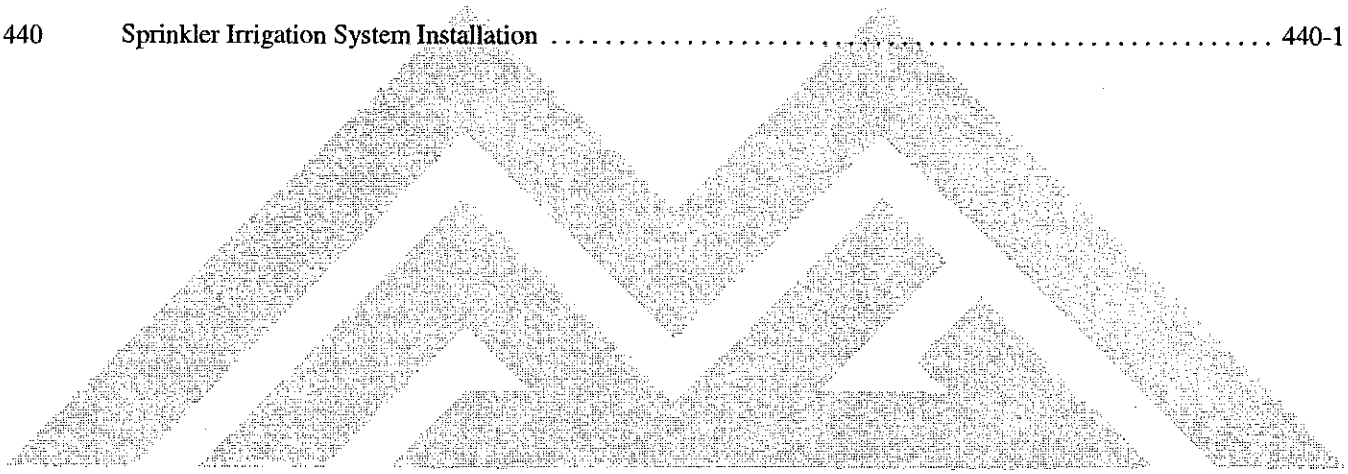

SECTION 401

TRAFFIC CONTROL

401.1 DESCRIPTION:

Traffic control shall consist of traffic control devices and flagmen or pilot cars. All traffic control devices, the application of traffic control measures, and traffic regulation in these specifications are to supplement and are not intended to delete any of the provisions of the Contracting Agency's Traffic Barricade Manual, the Uniform Manual on Traffic Control Devices or any agency's Supplements to these Uniform Standard Specifications.

401.2 TRAFFIC CONTROL DEVICES:

Traffic control devices shall consist of providing, erecting, and maintaining necessary and adequate devices for the protection of the work, the workmen and the traveling public as approved by the Engineer.

(A) Temporary traffic control devices shall be used to guide traffic through construction areas. They include traffic cones to channelize traffic, portable barricades for warning, vertical panel channelizing devices to divert traffic, and lighting devices between the hours of sunset and sunrise.

(B) Advance warning devices shall be used to alert the motorist of an obstruction in the roadway. They include diamond-shaped signs, flags, and flasher type high level warning devices mounted 8 feet above the roadway.

401.3 FLAGMEN OR PILOT CARS:

Flagmen or pilot cars shall consist of providing sufficient flagmen, uniformed off-duty law enforcement officers or pilot cars to expedite the safe passage of traffic.

401.4 TRAFFIC CONTROL MEASURES:

The application of all traffic control measures shall be based primarily upon the conditions existing at the time that such measures are deemed necessary. Prior to the start of any work that would interrupt the normal flow of traffic, sufficient and adequate devices and measures shall be provided and erected as directed by the Engineer. These devices shall be immediately removed when no longer needed.

401.5 GENERAL TRAFFIC REGULATIONS:

A traffic lane shall be a minimum of 10 feet of clear street width with a safe motor vehicle operating speed of at least 25 miles per hour.

An intersection shall be all of the area within the right of way intersection streets plus 300 feet beyond the edge of the intersected right of way on all legs of the intersection.

A minimum of two traffic lanes, one for each direction, shall be maintained open to traffic at all times on all major streets.

(A) **On Bond Issue and Budget Projects:** All existing traffic lanes on major streets shall be maintained open to traffic at signalized intersections between the hours of 7:00 a.m. to 9:00 a.m. and 4:00 p.m. to 6:00 p.m. weekdays unless otherwise specified in the special provisions.

(B) **On Improvement District Projects:** All existing traffic lanes on major streets shall be maintained open to traffic between the hours of 7:00 a.m. to 9:00 a.m. and 4:00 p.m. to 6:00 p.m. weekdays. All work that enters or crosses a major street must be done at times other than 7:00 a.m. to 9:00 a.m. and 4:00 p.m. to 6:00 p.m. unless otherwise specified in the special provisions.

Local access shall be maintained to all properties on the project at all possible times. When local access cannot be maintained, the Contractor must notify the affected property owner at least 24 hours in advance and restore access as soon as possible.

A traffic lane shall not be considered as satisfactorily open to traffic unless it is paved with hot mix or cold mix asphalt paving if surrounded by or adjacent to existing pavement. Where pavement did not previously exist or where all of the existing pavement has been removed, a traffic lane shall not be considered as satisfactorily open to traffic unless it is graded reasonably smooth and maintained dust free as directed by the Engineer.

Arrangements for partial or complete street closure permits shall be handled through the Engineer on local projects or the Arizona Highway Department, Resident Engineer on Federal Aid Projects, to the Contracting Agency's Traffic Engineering Department. An advance notice of 48 hours for major streets and 24 hours for local streets and alleys is required from the Contractor.

The Contractor shall provide and maintain all necessary traffic controls to protect and guide traffic for all work in the construction area.

The Contractor shall maintain all existing STOP, YIELD, and street name signs erect, clean, and in full view of the intended traffic at all times. If these signs interfere with construction, the Contractor shall temporarily relocate the signs away from construction but still in full view of the intended traffic.

The Traffic Engineering Department will reset all STOP, YIELD, and street name signs to permanent locations.

Existing traffic signs other than STOP, YIELD, and street name signs shall be maintained by the Contractor until such time as construction renders them obsolete. At that time the Contractor shall remove signs and posts without damage and deliver them as directed by the Engineer. The Traffic Engineering Department will reinstall all traffic signs.

Subject to the approval of the Traffic Engineer, the Contractor shall furnish and install the 25 MPH Construction Zone Speed Limit Signs. The Contractor shall maintain the signs erect, clean and in full view of the intended traffic at all times. Should the signs interfere with construction, the Contractor shall relocate the signs as necessary.

At any time project construction shall require the closure or disruption of traffic in any roadway, alley, or refuse collection easement such that normal refuse collection will be interfered with, the Contractor shall prior to causing such closure or disruption, make arrangements with the Contracting Agency's Sanitation Department in order that refuse collection service can be maintained.

Special traffic regulation will be listed in the special provisions.

401.6 MEASUREMENT:

No measurement will be made for traffic control devices.

Flagmen, uniformed off-duty law enforcement officers or pilot cars, with driver, will be measured by the hour for each individual, including vehicle and equipment, required to perform traffic control. When an officer is used less than 3 hours, a minimum of 3 hours will be charged. Anything over 3 hours will be measured by the hour.

401.7 PAYMENT:

Payment will be made at the contract bid price in the proposal for uniformed, off-duty law enforcement officer. If the officer is utilized in excess of 8 hours in any calendar day or in excess of 40 hours in any calendar work week, payment shall be at the rate of 1½ times the contract bid price for all hours worked in excess in either of the above time periods.

End of Section

SECTION 405

MONUMENTS

405.1 DESCRIPTION:

This work shall consist of furnishing and installing portland cement concrete right-of-way monuments and survey monuments at the locations shown on the plans or directed by the Engineer and as specified.

Monuments shall conform to the standard details or details shown on the plan.

405.2 MATERIALS:

The concrete portion of monuments shall be constructed in accordance with the provisions in Sections 725 and 505.

Concrete shall be Class B.

Brass caps for survey monuments will be furnished by the Contractor unless otherwise specified in the special provisions.

405.3 CONSTRUCTION:

In constructing precast monuments, the forms shall not be removed until after the concrete has hardened. Monuments that are warped will be rejected. The exposed surface of the finished monuments shall be uniform, of even texture, and shall be free from holes, cracks and chipped edges. The precast monuments shall not be transported to the work site until the concrete has cured.

Cast in place monuments shall be cast in drilled holes without the use of forms.

Brass caps shall be placed in survey monuments before the concrete block has acquired its initial set and shall be firmly bedded in the concrete. The concrete block shall be so located that, the reference point will fall within a 1 inch circle in the center of the brass cap.

405.4 INSTALLATION:

Right-of-way monuments shall be set firmly and vertically in the ground to a depth of at least 3 feet.

The tops of survey monument covers shall be set flush with the pavement surface.

Survey monuments shall be set in position after the first course of asphalt concrete.

405.5 PAYMENT:

Payment for monuments will be made on the basis of the prices bid and shall include full compensation for furnishing all labor, materials, tools, equipment and incidentals, and for doing all the work involved in constructing the monuments, complete in place, including asphalt seal and necessary excavation and backfill, as shown on the plans or as directed by the Engineer.

End of Section

SECTION 410

PRECAST SAFETY CURBS

410.1 DESCRIPTION:

This work shall consist of furnishing and installing precast safety curbs as shown on standard details or as detailed on the plans, or as directed by the Engineer.

410.2 MATERIALS:

Portland cement concrete shall be Class A, conforming to the applicable requirements of Section 725.

Steel reinforcing shall conform to the requirements of Section 727. The dimensions of the precast curb shall be as indicated on the plans and standard details.

Dowels shall conform to ASTM A-615 plain, intermediate grade, ½ inch round by 24 inches.

Mastic may be either a fiberized mastic cement or an epoxy cement. The Contractor shall submit to the Engineer, the type of mastic and manufacturer's recommended procedures for use, within 10 days after the date of award of contact which will enable the Engineer to determine that the proposed material is acceptable.

410.3 CONSTRUCTION METHOD:

Back of safety curbs shall be set at the property line unless otherwise shown on the plans. Curbs shall be kept a minimum distance of 5 feet from driveways.

Precast safety curb installed on natural earth or gravel surfaces shall be secured in place with a minimum of 2 steel dowels through each curb. A minimum 12 inch diameter by 12 inches deep Class B concrete cylinder or approved equal shall be poured in place around each dowel.

Precast safety curb installed on portland cement concrete or asphalt concrete surfaces shall be bedded in a continuous layer of mastic cement under its complete base area and secured with a minimum of 2 steel dowels driven through the safety curb.

Dowels shall extend into the sub-surface and/or concrete cylinder a minimum of 18 inches. When installed, the top of each dowel shall be flush with the top of the safety curb.

The Engineer will verify locations of all safety curbs in the field at time of construction.

410.4 MEASUREMENT:

Measurement will be the number of safety curbs furnished and installed, complete in place.

410.5 PAYMENT:

Payment will be made at the unit price bid each in the proposal for the following:

(A) Safety curbs installed on natural earth or gravel

(B) Safety curbs installed on portland cement concrete

(C) Safety curbs installed on asphalt concrete

End of Section

SECTION 415

FLEXIBLE METAL GUARDRAIL

415.1 DESCRIPTION:

This work shall consist of constructing metal beam guard railing, at the location and in accordance with the details shown on the plans, and as specified in the special provisions.

415.2 MATERIALS AND CONSTRUCTION:

Materials and construction for the railings shall conform to the following requirements:

The rail elements, terminal sections, bolts, nuts and other fittings shall conform to the specifications of AASHTO M-180, except as modified in this specification. The edges and center of the rail element shall contact each post or block. Rail element joints shall be lapped not less than 12½ inches and bolted. The rail metal shall be open hearth, electric furnace, or basic oxygen steel and, in addition to conforming to the requirements of AASHTO M-180, shall withstand a cold bend, without cracking of 180 degrees around a mandrel of a diameter equal to 2½ times the thickness of the plate.

The ends of each length of railing shall be fitted with terminal sections.

Workmanship shall be equivalent to good commercial practice and all edges, bolt holes and surfaces shall be free of torn metal, burrs, sharp edges and protrusions.

Three certified copies of mill test reports of each heat from which the rail element is formed shall be furnished to the Engineer.

Bolts shall have shoulders of such shape as will prevent the bolts from turning.

The rail element shall have full bearing at joints. When the radius of curvature is 150 feet or less, the rail element shall be shaped in the shop.

Unless otherwise specified the rail elements, terminal sections, bolts, nuts, and other fittings shall be galvanized in accordance with Section 771.

Posts, including blocks, shall be construction grade, Douglas Fir, free of heart center.

The posts and blocks shall be pressure treated after fabrication with oil borne pentachlorophenol, or coppernaphthenate, as provided in Section 779.

The posts shall be firmly placed in the ground. The space around posts shall be backfilled with selected earth, free of rock, placed in layers approximately 4 inches thick and each layer shall be moistened and thoroughly compacted.

Posts shall be placed at equal intervals, as shown on the plans, except that the end posts may be spaced closer to adjacent posts if directed by the Engineer.

The bolted connection of the rail element to the post shall withstand a 5,000 pound pull at right angles to the line of the railing. The metal work shall be fabricated in the shop, and no punching, cutting or welding will be permitted in the field. Rail elements shall be lapped so that the exposed ends will not face approaching traffic. Terminal sections shall be installed in accordance with the manufacturer's recommendations.

Surplus excavated material remaining after the guard railing has been constructed shall be disposed of.

Railing parts furnished under these specifications shall be interchangeable with similar parts regardless of source.

415.3 PAINTING:

All metal surfaces of the guard rails shall have a zinc chromate prime coat and two coats of white enamel. The exposed portions of the wood posts shall have a wood primer and two coats of finish paint. Materials and application shall be as specified in Sections 790 and 530. Colors shall be as directed by the Engineer.

415.4 MEASUREMENT:

The railing will be measured by the linear foot from end to end along the face of the railing including terminal sections.

415.5 PAYMENT:

Payment for furnishing materials and installing guard rails complete, in place, including excavation and backfill for posts and painting will be made on the basis of the price bid per linear foot, unless an alternate basis of payment is specified in the proposal.

End of Section

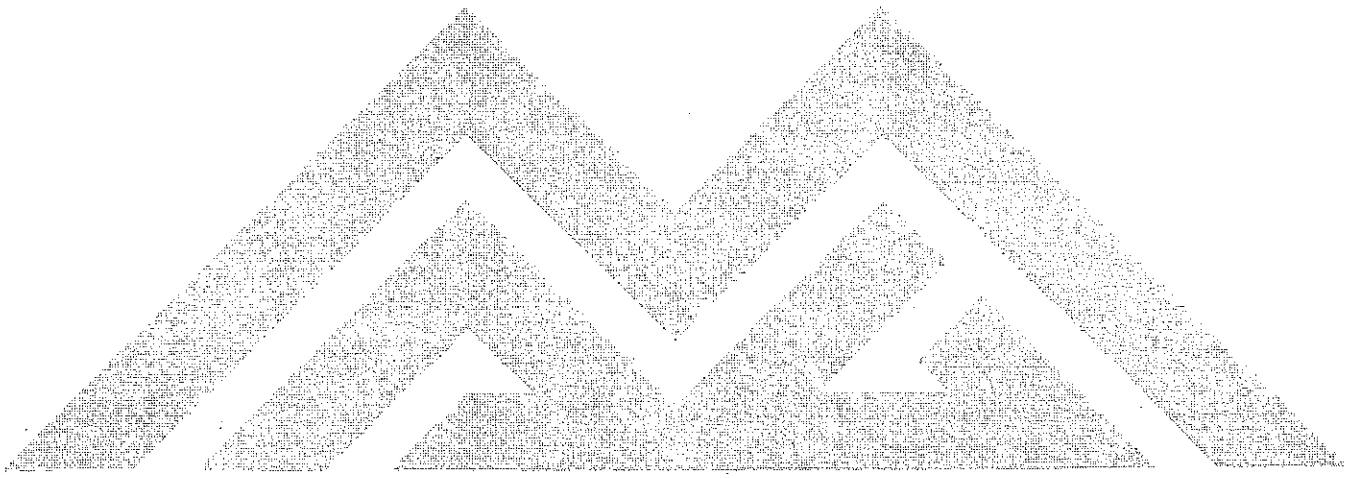

SECTION 420

CHAIN LINK FENCES

420.1 DESCRIPTION:

This work shall consist of constructing chain link fences at the locations and in accordance with the details shown on the plans, and as provided in these specifications and the special provisions. When installation procedures are not covered within these specifications, standard details, special provisions, plans or other documents, installation will comply with ASTM F-567.

420.2 MATERIALS:

Chain link fence material shall conform to the requirements of Section 772. Portland cement concrete shall conform to the requirements of Section 725.

420.3 CONSTRUCTION METHODS:

420.3.1 Fence Construction: Before any fence is installed, the Contractor shall submit to the Engineer for approval, shop drawings showing the details of all fittings and gates proposed to be furnished.

Posts shall be spaced at not more than 10 foot intervals, measured from center to center of posts, and shall be placed in a vertical position.

Changes in line or grade where the angle of deflection is 30 degrees or more shall be considered as corner and slope points, respectively, and corner or slope posts shall be installed at these points.

All posts shall be set in Class C concrete footings, which footings shall be crowned at the top to shed water. Footings for line posts for 72 inch fabric or less shall not be less than 30 inches deep and 8 inches in diameter, and footings for line posts for fabric more than 72 inches shall be shown on plans. All other footings, unless otherwise indicated on the plans or in the special provisions, shall be not less than 36 inches deep and 12 inches in diameter.

End, corner, slope and gate posts shall be braced to the midpoint of the nearest line post or posts with horizontal braces used as compression members and the said line posts trussed from the brace back to the bottom of the end, corner, slope or gate post with ⅜ inch steel truss rods with turnbuckles used as tension members.

Unless otherwise specified all fence shall be installed with a top rail and a bottom tension wire and the post tops shall be secured to the post by bolts or rivets. When top rail is omitted, a top and bottom tension wire shall be used.

The fabric shall be placed on the outward facing side of the posts and shall be installed so that the top edge projects above the top rail of the fence to form a knuckled or barbed projection. The fabric shall be stretched taut and securely fastened to the posts, the top rail, and the bottom tension wire. The tension wire shall be installed on a straight grade between posts by excavating the high points of ground and in no case will filling of depression be permitted. Unless otherwise specified the bottom of the fence shall be on a line approximately 2 inches above the ground surface.

The fabric shall be fastened to end, corner, slope and gate posts with 3/16 inch × ⅜ inch high carbon steel tension bars and not less than 12 gage × 1 inch steel tension bar bands spaced at 16 inch intervals; and to line posts, top rail and tension wire with 11 gage or heavier tie wires or metal bands. Tire wires or metal bands shall be placed on line posts at intervals of approximately 16 inches, and on top rail and tension wire at intervals of approximately 18 inches.

Barbed wire shall be installed on the fence only when specifically required by the plans or special provisions. When required, it shall be installed on extension arms of a type specified under Section 772.

420.3.2 Construction of Gates: The widths of any gates to be installed will be indicated on the plans or in the special provisions. Gates in which the width of the leaf is greater than 6 feet shall be constructed with an internal horizontal or vertical stiffener of the same diameter as the frame; the frame shall be trussed with a ⅜ inch adjustable tension rod. Gates in which the width of the leaf is 6 feet or less will not require a stiffener and will require only 1 truss rod.

The corners of gate frames shall be fastened together and reinforced with a fitting designed for the purpose or by welding. All welds shall be ground smooth.

Chain link fence fabric shall be attached to the gate frame by the use of tension bars and tie wires as specified for fence construction, and suitable tension connectors spaced at approximately 16 inch intervals.

The swing gates shall be hung by at least 2 steel or malleable iron hinges, so designed as to securely clamp to the gate post and permit the gate to be swung back against the fence.

Semi-cantilever gates shall be provided with a combination steel or malleable iron catch and locking attachment of approved design, and shall be subject to approval of the Contracting Agency. Stops to hold gates open and a center rest with catch shall be provided on all double drive gates and on all other gates where required.

420.3.3 Repair of Damaged Coating: Welds made after galvanizing shall be ground smooth, then wire brushed to remove loose or burned zinc coating, after which the cleaned areas shall be repaired to the satisfaction of the Engineer in accordance with Section 771. Repairs to abraded or otherwise damaged zinc coating shall be made in a similar manner.

420.4 MEASUREMENT:

Chain link fence shall be measured on the fence line along the bottom strain wire from center to center of end posts, deducting the widths of gates and openings.

420.5 PAYMENTS:

The price bid and paid per linear foot for chain link fence shall include full compensation for furnishing all labor, materials, tools, and equipment, and doing all the work involved in constructing the fence complete in place as specified on the plans, and in the special provisions, except for furnishing and installing gates.

Gates will be paid for at the unit price bid for each size of gate required by the plans or special provisions, which price shall include full compensation for furnishing the gates, together with all necessary gate posts, fittings and hardware, and doing all the work involved in installing the gates complete in place as specified. If double gates are required, each double gate will be paid for at the unit price bid and such unit price shall include furnishing and installing both leaves.

Full compensation for clearing the line of the fence and disposing of the resulting material, excavating high points in the existing ground between posts, excavating and furnishing and placing concrete footings, connecting new fences to structures and existing fences, and any other related work shall be considered as included in the price bid per linear foot of fence and no additional allowance will be made therefor.

End of Section

SECTION 424

PARKWAY GRADING

424.1 DESCRIPTION:

This grading shall include all work necessary to bring the surface of the parkway, between the back of curbs and sidewalks and/or the parkway between sidewalks and the right-of-way line, to the grade and cross-section shown on the plans or as directed by the Engineer. It shall also include median islands between divided roadways.

424.2 ROUGH GRADING:

(A) Fill material shall contain no rocks over 3 inches in diameter, broken concrete, or debris of any nature.

(B) Backfill behind curbs and along the edges of the sidewalk shall be made immediately upon the completion of those items.

424.3 FINE GRADING:

(A) The finished surface shall be free from stone and all debris and be true to grade and cross-sections after compaction to not less than 80% of maximum density, as determined by test methods specified in Section 301.

(B) Where existing parkways are planted in grass, flowers, or shrubs and the level is somewhat above the top of the curb, or sidewalk, the parkway shall be graded back on a 4:1 slope from the edge of curb or sidewalk, with the least possible damage to the planted area.

424.4 PAYMENT:

Unless otherwise provided in the special provisions or proposal, no payment will be made for parkway grading as such; the cost thereof shall be included in the price bid for construction or installation of the items to which such grading is incidental or appurtenant.

End of Section

SECTION 425

TOPSOILS

425.1 DESCRIPTION:

This work shall consist of furnishing and hauling topsoil from an approved source and placing the topsoil as shown on the plans, in accordance with this specification and special provisions.

425.2 MATERIALS:

Topsoil shall conform to the requirements of Section 795.

425.3 CONSTRUCTION METHODS:

Prior to the excavation of topsoil, all grass, weeds, brush, stumps, loose rocks and other objectionable material shall be removed from the surface of the area from which the topsoil is to be removed.

The topsoil source shall be excavated in such a manner that all material excavated will be of the same composition and structure throughout.

Topsoil shall be spread over the areas and to the depths as specified, and shall be water settled.

After the topsoil has been spread, stumps, roots and other objectionable matter shall be removed from the surface of the area and disposed of in a manner satisfactory to the Engineer.

425.4 MEASUREMENT:

Unless otherwise specified, topsoil shall be measured by the cubic yard in place and loose after watering and settling.

425.5 PAYMENT:

The quantities measured as provided above, will be paid for at the contract price per cubic yard for furnishing and placing topsoil, which price shall be full compensation for the item complete, as described and specified.

End of Section

SECTION 430

LANDSCAPING AND PLANTING

430.1 DESCRIPTION:

This section shall govern the preparation and planting of landscape areas required in the Plans or Specifications. Materials will be in accordance with Section 795.

Existing utilities and improvements not designated for removal shall be protected in place. Any damages will be repaired by the Contractor at no additional cost to the Contracting Agency.

Unless otherwise provided, walls, curbs, planter boxes, irrigation systems, and other improvements shall be constructed after rough grading has been completed and prior to finish grading.

430.2 GENERAL:

Landscape or planting areas shall not be cultivated when they are so wet as to cause excessive compaction or so dry as to cause excessive dust or the formation of large clods.

Prior to any grading the areas shall be cleared and grubbed in accordance with Section 201, Clearing and Grubbing.

Finish grade for these areas shall not vary more than 1 inch from the specified grade and cross-section and shall be a smooth uniform surface, free of any abrupt grade changes or depressions. Unless otherwise specified, finish grade below adjacent paving, curbs, or headers shall be 1 inch for lawn and granite areas and 3 inches for planting areas.

Unless otherwise specified, in-place soil will be prepared and conditioned for utilization as topsoil. If imported topsoil is specified or has to be used, the existing soil, before subgrade, shall be scarified to a depth of 6 inches prior to placing the topsoil and the thickness of the topsoil layer shall be at least 6 inches.

All landscape and planting areas, except those intended for lawns, shall be treated with a pre-emergence control, such as "Surflan" or equal, applied in accordance with the manufacturer's recommendations.

430.3 LAWN AREAS:

430.3.1 Preparation of In-Place Soil: After clearing and grubbing has been completed, the existing surface shall be scarified and cultivated to a minimum depth of 8 inches; then brought to finish grade. During the operation, debris, including all stones over 1 inch in any dimensions, shall be removed and disposed of offsite.

After clearing and grubbing and initial cultivation has been completed, chemical fertilizer, 16-20-0 composition, shall be mechanically spread over the entire area at an average rate of 10 pounds per 1000 square feet. After spreading, the fertilizer shall be cultivated into the top six inches of soil using suitable equipment. The resulting soil shall be in a friable condition, suitable for planting.

The Engineer shall inspect and approve these areas prior to seeding.

430.3.2 Seeding: If a bermuda summer lawn has not been established during its normal planting season, April through September, then rye grass (Solium Multi-folium) seed will be planted.

The rate of seeding shall be 3½ pounds of bermuda seed or 15 pounds of rye seed per 1000 square feet.

After seeding has been completed, the entire area shall be rolled with a lawn roller for leveling and seed retention. Immediately after rolling, the area shall be watered with a mist type spray until the soil is wet to a depth of 2 inches.

The Contractor shall provide the necessary safeguards to protect the planted areas from damage by erosion or trespass. Any damaged areas or any areas, greater than 6 inches in diameter, which fail to show a good stand shall be repaired and replanted until an acceptable stand of grass is obtained.

430.3.3 Maintenance: The Contractor shall be responsible for maintenance of the lawn areas until they are accepted by the Contracting Agency. This shall include watering, mowing, weeding and removal of all debris.

430.4 DECOMPOSED GRANITE AREA:

Decomposed granite shall be in accordance with Section 795. The Contractor shall confirm that a sufficient quantity is available so that the entire area will be of the same composition and appearance, and shall furnish a sample to the Engineer for approval as to color.

After preliminary grading is completed and the area has been cleared and grubbed, a pre-emergence control, such as Surflan, or equal, shall be applied over the entire area, in accordance with the manufacturer's recommendations. In flat areas, a 10 mm black polyethylene film shall be placed prior to spreading the granite. The decomposed granite shall be evenly distributed over the area with a minimum depth of 2 inches. Finish grading will be accomplished and the granite will be lightly watered and then compacted to an extent satisfactory to the Engineer. After compaction, a second treatment with the pre-emergence control will be accomplished.

430.5 TREE, SHRUB, AND GROUND COVER PLANTING

The species, sizes, the manner in which to be furnished, and the approximate number are as shown in the plant list. The quantities, as listed, are approximate and the Contractor shall furnish and install all plant material necessary to complete the plantings as shown on the landscape plan. Change order adjustment will be made for unit price proposals, but not for lump sum proposals.

430.5.1 Substitutions: All requests for substitutions must be submitted in writing to the Contracting Agency prior to commencement of work on the project. The Contractor shall not take any further action concerning his request until a written approval or denial is received from the Contracting Agency. Plants of kinds other than those indicated on the plant list will be considered by the Contracting Agency only upon submission of proof that the specified plant is not reasonably procurable in the local region. Substitutions will resemble the specified plant in regards to appearance, ultimate height, shape, habit of growth, and general soil requirement.

Substitution of a larger size of the same specie may be made by the Contractor without written approval. However, the Contracting Agency will not be responsible for any additional costs incurred by the Contractor, either for the additional cost of the plants or for any additional planting costs.

430.5.2 Plant Inspection Prior to Delivery to the Project Site: Prior to delivery of any species to the project site, the Contractor shall make the necessary arrangement with the Engineer for an inspection of the plant material at the offsite location. Any plants found to be unsuitable in growth or condition or which are not true to name shall be removed and replaced with acceptable plants.

430.5.3 Plant Protection After Delivery to the Project Site: Plants transported to the site shall be planted as soon as possible. During any interim storage period, they shall not be exposed to excessive sun or drying winds. Any stock, that in the opinion of the Engineer, has deteriorated due to exposure or has been damaged during transporting, will be removed and replaced at the Contractor's expense.

430.5.4 Plant Location: The Contractor shall stake out the location of planting areas and plantings pit prior to any excavation. Subject to the Engineer's approval, minor relocations may be accomplished at this time to avoid unsuitable conditions, such as utilities, rocky areas, poor soil, etc. If major relocations are necessary, the Engineer will provide revised plans.

430.5.5 Ground Cover Areas: The planting beds shall be brought to finish grade before spreading the fertilizer or conditioning material specified. Fertilizing and conditioning material shall be mechanically spread at a uniform rate over the entire bed area. After spreading, this material shall be uniformly cultivated into the upper 6 inches of soil using suitable equipment. The resulting soil shall be in a friable condition suitable for planting. A pre-emergence control application is required prior to planting.

Ground cover shall be planted in moist soil with the spacing as indicated on the plans. Each plant shall be planted with its proportionate amount of soil so as to minimize root disturbance. After planting, the area shall be raked to restore a smooth finish grade and to provide drainage. Watering will begin immediately.

The Contractor is responsible for maintaining these areas until acceptance by the Contracting Agency. Maintenance will include protection from trespass or damage, weeding, watering, and removal of all debris. It may be necessary to install a protective fence or barrier around these areas until growth is assured.

430.5.6 Shrub and Tree Pits: Planting pits shall be approximately circular with a diameter and depth at least twice the size of the plant ball or container. It must be large enough to permit handling and planting without injury or breakage of the root ball or root system. Unless otherwise specified, the excavated soil will be conditioned and used as prepared soil mix for backfill. Plants will not be allowed to stand in these pits without watering.

Prepared soil mix shall consist of one part organic soil conditioner (Section 795), two parts excavated soil and one pound of gypsum and four ounces of soil sulphur per tree or one-half pound of gypsum and two ounces of soil sulphur per shrub. The backfill shall be produced by thoroughly combining these components into a homogeneous mixture. The Contractor shall notify the Engineer prior to mixing prepared soil so that he may observe the mixing process. In addition, during backfilling, slow release fertilizer tablets, Agriform 21 gram tablets with a 20-10-5 analysis, shall be added in the following quantities:

For one-gallon container ..... 1 tablet
For five-gallon container ..... 2 tablets
For fifteen-gallon container ..... 4 tablets
For twenty-four inch or larger box ..... 6 tablets

All containers shall be opened and removed in such a manner that the roots of the plant are not damaged. Balled plants wrapping shall be loosened or cut back after the plant is positioned in the pit.

A layer of prepared soil mix shall be placed in the pit and the plant shall be set approximately in the center of the hole with the root crown at its natural growing depth with respect to finish grade. The plant shall be faced so as to present the best appearance and relationship to adjacent plants or structures. It shall be rigidly constrained until backfilling with prepared soil mix and slow release fertilizer tablets is completed. The backfill will be thoroughly settled by tamping and watering so that all voids are filled.

Trees shall be supported by two tree stakes (Section 795) with a top tie placed for maximum support and a second tie placed midway between top tie and ground level.

After planting, the plants shall be pruned as directed by the Engineer.

430.6 HEADER INSTALLATION:

Headers shall be installed at the location and grades as shown on the plans prior to planting operations. Stakes shall be located at corners and at intervals not to exceed 5 feet and shall be driven to slightly below the top of the header. Headers shall be nailed to the stakes with two nails, clinched ½ inch. Splice plates shall be used at butt joint; centered on the joint and nailed with four nails.

430.7 CLEAN UP:

Any debris or other material dropped onto paved or graded area during excavation or hauling operation shall be promptly removed and these areas shall be kept neat and clean at all times. Upon completion of planting operation, all remaining soil, stones, and other debris shall be removed from the site and disposed of to the satisfaction of the Engineer.

430.8 PLANT GUARANTEE AND MAINTENANCE:

The Contractor shall insure that all plant materials are in a sound, healthy, vigorous condition free from insects, bark abrasions, or other objectionable disfigurements and shall immediately replace any plant which is unacceptable at any time up to and including final acceptance of the project or completion of the plant establishment period whichever occurs later. When the termination of the plant establishment period extends beyond the final acceptance date for the project, this additional period of time for plant establishment may be considered as a special warranty period within the standard 1-year guarantee period and the Engineer may authorize final payment in accordance with Section 109. Unless otherwise authorized by the Engineer, the Contractor shall maintain all landscaped areas on a continuous basis as they are completed during the course of work and until final project acceptance or the termination of the plant establishment period, whichever occurs later. Maintenance shall include keeping the landscape areas free of debris and weeding and cultivating the planted areas at intervals acceptable to the Engineer. The Contractor shall provide adequate personnel to accomplish the required maintenance. Pruning and restaking of plants shall be as directed by the Engineer.

430.9 PLANT ESTABLISHMENT PERIOD:

The Contractor shall request an inspection by the Engineer whenever substantial completion of the planting and related work has been accomplished. After this initial inspection, and subject to his approval of the work, the Engineer will issue a written field notification to the Contractor setting the effective, beginning date for plant establishment. The plant establishment period shall be for a period of 60 calendar days, but is subject to extension by the Engineer if the landscape areas are improperly maintained, appreciable plant replacement is required, or other corrective work becomes necessary.

At final project acceptance or at the end of the plan establishment period, a final acceptance inspection of the planted areas will be made by the Engineer.

430.10 MEASUREMENT AND PAYMENT:

Measurement and payment shall be in accordance with Section 109.

The lump sum or unit prices established on the proposal sheet shall be full compensation for furnishing all labor, material, tools, and equipment and for performing all work necessary to complete the landscaping operation to include planting of trees, shrubs, and ground cover.

End of Section

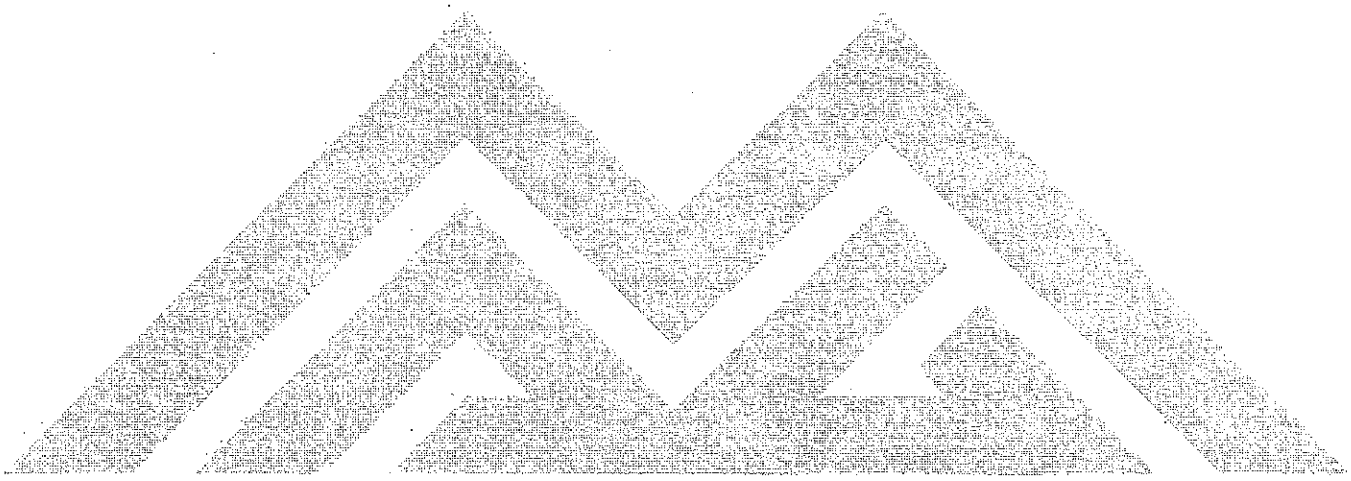

SECTION 440

SPRINKLER IRRIGATION SYSTEM INSTALLATION

440.1 GENERAL:

The Contractor shall furnish all the necessary labor, materials, and equipment required to complete the installation of the automatic sprinkler irrigation system providing full coverage to all plants and shrubs. Unless otherwise specified, the automatic sprinkler irrigation system layout as shown on the plans shall be considered schematic. The Contractor shall lay out the entire system using stakes to indicate the location of the various components. Preliminary adjustments to conform to actual site condition shall be accomplished at this time and the approval of the Engineer obtained prior to any actual work being performed. Utility connections, both water and electrical, shall be as shown on the plans or as designated by the utility concerned. Unless specifically exempted in the plans or specifications, the Contractor shall pay all costs concerned in providing these services.

Prior to the acceptance of the project, the Contractor shall furnish the Engineer 4 copies of the manufacturer's instruction and maintenance manual for each component or group of components to include parts listings and source of supply.

Prior to final inspection, the Contractor shall submit one set of corrected, as-built drawings showing the location of all pipe, valves, wiring, and utility services.

All permits for installation or construction of any of the work included under this section, which are required by legally constituted authorities having jurisdiction, shall be obtained and paid for by the Contractor, each at the proper time. He shall also arrange for any pay all costs in connection with any inspections and examinations required by these authorities.

440.1.1 LANDSCAPE IRRIGATION SYSTEM REMOVAL AND RESTORATION

When construction encroaches into an existing landscaped irrigation system, the Contractor shall remove the conflicting portion of the system within the right-of-way and/or easements and any portion which may remain under the proposed improvements, whether shown or not shown on the plans. If the removals affect other areas of the system not in conflict with the construction, the Contractor shall permanently or temporarily restore or modify the existing system to provide water to the unaffected areas. The restoration or modifications shall be completed within 24 hours after the disruption occurs or notification by the Engineer.

The Contractor shall restore the affected landscape irrigation system to an operational condition equal to or better than the existing system. When necessary, bubbler and/or sprinkler heads shall be reinstalled at the edge of the new improvements. The reconstructed or modified system shall provide completed irrigation coverage without overspray onto walks, pavement, walls, buildings, etc.

The Contractor shall have the option to salvage and reuse existing materials. In the event that it is not feasible to reinstall the salvaged materials, new materials shall be installed.

To provide ample notification for owners who desire to remove and restore their own system, the Contractor shall notify the affected property owners at least fourteen (14) days prior to the scheduled removal of the irrigation system.

When determined by the Engineer that the existing sprinkler system can not be practically restored, the existing system shall be plugged and removed as directed.

Unless specified by the agency and called out in the bid documents, this work shall be considered incidental to the contract and no separate payment shall be made to comply with these provisions.

440.2 TRENCH EXCAVATION AND BACKFILL:

Trenches and other excavations shall be sized to accommodate the irrigation system components, conduit, and other required facilities. Additional space shall be provided to assure proper installation and access for inspection. Unless otherwise specified, the minimum depth of cover over pipelines and conduits shall be as follows:
(A) Electrical conduit — 18 inches

(B) Waterlines continuously pressurized — 18 inches

(C) Lateral sprinkler lines — 12 inches

(D) Plastic lines under pavement — 24 inches

The bottom of trenches shall be true to grade and free of protruding stones, roots or other matter which would prevent proper bedding of pipe or other facilities.

Trenches and excavations shall be backfilled so that the specified thickness of topsoil is restored to the upper part of the trench. Compaction shall be in accordance with Section 301.

Water settling of trench backfill will not be permitted unless approved by the Engineer.

440.3 PIPE INSTALLATION:

(A) General. Pipe fittings shall be installed in accordance with the manufacturer's recommendations and these specifications. When requested by the Engineer, the Contractor shall furnish the manufacturer's printed installation instructions before pipe installation.

Pipe shall be bedded in at least 2 inches of finely graded native soil or sand to provide a firm, uniform bearing. After laying, the pipe shall be surrounded with additional finely graded native soil or sand to at least 2 inches over the top of the pipe. Trench backfill, sufficient to anchor the pipes, may be deposited before the pipeline pressure testing, except that joints shall remain exposed until satisfactory completion of testing.

When two or more pipelines are installed in the same trench, they shall be separated by a minimum horizontal clear distance of 6 inches and they shall be installed so that each pipeline, valve, or other pipeline component may be serviced or replaced without disturbing the other.

Piping under concrete or asphalt shall normally be installed by jacking, boring, or hydraulic driving. When any cutting or removal of asphalt and/or concrete work is necessary, it shall be saw cut in accordance with Section 601. Permission to cut asphalt and/or concrete shall be obtained from the Engineer. Where piping on the drawings is shown under paved areas, but running parallel and adjacent to planted areas, the intent of the drawings is to install the piping in the planted area.

When plastic to steel pipe connectors are required, these connections shall be accomplished first. A non-hardening, non-oil base pipe compound or liquid teflon shall be used on the male threads only. The joint shall be hand-tightened with final tightening as necessary to prevent leaks accomplished with a strap wrench.

Threads shall be cut with clean sharp dies and shall conform to American Standards Association Specification B2.

Joints shall be made with a non-toxic non-hardening joint compound applied to the male threads only.

(B) When wrapped pipe is specified, joints and connectors shall not be wrapped until completion of the pressure test.

(C) Plastic Pipe. Plastic pipe shall be cut square, externally chamfered approximately 10-15 degrees, and all burrs and fins removed. It shall be joined utilizing threaded fittings or socket type, solvent welded fittings. Schedule 80 pipe only will be used for threaded joints. Field threading will be accomplished in the same manner as specified for steel pipe, except that a plug will be installed in the bore of the pipe prior to threading to prevent distortion. Threaded pipe joints shall be made using teflon tape on the male threads. Solvent will not be used for threaded joints. Threaded joints shall be hand tightened with final tightening as necessary to prevent leaks with a strap wrench. Solvent welded joints shall be made in accordance with ASTM D-2855, and the type of solvent recommended by the pipe manufacturer shall be used. Solvent shall be applied to the pipe ends in such a manner that no material is deposited on the interior surface or forced into the interior of the pipe during insertion. Excess solvent on the exterior of the joint shall be wiped clean immediately after assembly.

The pipe shall be protected from damage during assembly. All vises shall have padded jaws and only strap wrenches shall be used. Any plastic pipe which has been nicked, scarred, or otherwise damaged shall be removed and replaced. Care shall be exercised so that stresses on a previously made joint are avoided. Movement of the pipe following assembly, such a lowering the pipe into the trench, shall not occur prior to the set time recommended by the manufacturer of the solvent cement used.

The plastic pipe will be snaked from side to side within the trench so as to provide approximately 1 foot of slack per each 100 feet of pipe.

The pipeline will not be exposed to water for at least 12 hours after the last solvent welded joint has been made.

440.4 VALVES, VALVE BOXES, AND SPECIAL EQUIPMENT INSTALLATION:

Valves, backflow preventers, pressure regulators and related accessories shall be furnished and installed as specified.

All valves and other equipment shall be installed in a normal upright position unless otherwise recommended by the manufacturer, and shall be readily accessible for operation, maintenance and replacement. Sectional control valves shall not be located within range of sprinklers they control.

Gate valves and sectional control valves shall be installed below ground. Gate valves shall be housed in a covered concrete or plastic box that will permit access for servicing. Sectional control valves shall be equipped with a sleeve and cap centered on the valve stem.

Quick-coupler valves and garden valves projecting above grade shall be installed a minimum of 3 feet from curbs, pavement and walks. In non-irrigated areas, quick-coupler valves shall be set flush with finish grade, and in irrigated areas at or just above water level. They shall be installed on a double swing joint riser assembly. Garden valves shall be set 12 inches above finish grade, and shall be installed on a galvanized riser. In non-irrigated areas all valve boxes, valve access sleeves, and caps shall be set to finish grade, and in irrigated areas set adjacent to curbs, sidewalks or pavement at or just above water level. Valves shall be set at sufficient depth to provide clearance between the cover and the cap, valve handle, or key when the valve is in the fully open position. Backflow preventers shall be provided with pipe supports and the accessories necessary to properly secure the assembly. All backflow preventers shall be assembled with pipe, fittings, and risers of an approved material by the contracting agency.

440.5 SPRINKLER HEAD INSTALLATION AND ADJUSTMENT:

In accordance with the requirements of Subsection 440.7 all mains and laterals, including risers, shall be flushed and pressure tested before installing sprinkler heads. A water coverage test shall be performed after the sprinkler heads are installed.

(A) Location, Elevation and Spacing. Sprinkler head spacing shall not exceed the maximum shown on the drawings or recommended by the manufacturer. They shall be installed with at least 4 inches clearance from adjacent vertical elements projecting above grade such as walls, planter boxes, curbs and fences. Bubbler heads shall be installed a minimum of 2 inches above finish grade. The Engineer will notify the Contractor in writing when the planted beds are sufficiently planted and settled to make the necessary adjustments to the bubbler heads. Any adjustments are to be made within sixty (60) calendar days after this notification is received and at no additional cost to the Contracting Agency.

(B) Riser Assembly. A top outlet riser assembly shall consist of a pipe riser threaded into a top outlet ell or tee installed in the lateral supply line. Double-swing joint and single-swing joint riser assemblies shall utilize a horizontal 6-inch pipe nipple threaded into a side outlet ell or tee installed in the lateral supply line. For a double-swing joint, 3 ells shall be used in the remaining assembly ahead of the vertical riser pipe. For a single-swing joint, one ell shall be used.

(C) Sprinkler Head Adjustment. After all sprinkler heads are installed and the irrigation system is operating, each section or unit shall be adjusted and balanced, with all section control valves fully open to obtain uniform and adequate coverage. Sprinkler heads having adjustable pin nozzles or orifices shall have the pins adjusted to provide adequate distribution of water over the coverage pattern. The Contractor shall substitute larger or smaller nozzle cores in non-adjustable sprinkler heads as necessary.

440.6 AUTOMATIC CONTROL SYSTEM INSTALLATION:

The Contractor shall install a complete automatic irrigation control system including the automatic controller, remote control valves and wiring, and all necessary accessories and utility service connection including the junction box and any work required from the stubout provided by the power company.

The automatic controller shall be installed outside of the coverage pattern of the irrigation system at the location designated in the contract documents. The foundation for the controller shall be Class C concrete of the size shown on the plan or recommended by the manufacturer. The control components in the controller shall be fused and the chassis shall be grounded. The controller shall be installed in a steel security cabinet with metal hasp and padlocks unless the controller is to be placed with a building or walled enclosure.

Remote control valves shall be compatible with the automatic controller. The valve is to be housed in a plastic box with locking cover, and it shall be installed with at least a 6-inch clearance below the plastic cover. The box shall be set to finish grade in non-irrigated areas and adjacent to curbs, sidewalks or pavement at or just above high water elevation in irrigated areas.

All service wiring shall be installed in rigid conduit from the service point to the controller at the minimum depth specified in Subsection 440.2. A separate disconnect switch or combination meter socket, as required, shall be installed between the source of power and the controller. The minimum service wire shall be No. 12 AWG copper 600 volt type, TWH or larger as required by the contract documents or controller manufacturer. Wire splices shall be located only in specified pull boxes and shall be made with a packaged kit approved for underground use. Pull boxes shall be plastic with locking covers set to proper elevations on a 12-inch layer of crushed rock or washed gravel.

All wiring issuing from the controller shall be direct burial installed in main or lateral waterline trenches wherever practicable. The wiring shall be bundled and secured to the lower quadrant of the irrigation pipeline at 10 foot intervals with plastic electrical tape. Sufficient slack shall be left in the wiring or tubing to provide for expansion and contraction. When the control wiring or tubing cannot be installed in a pipe trench, it shall be installed a minimum of 18 inches below finish grade.

All pilot or "hot" wires are to be of one color and all common wires are to be of another color.

Unless otherwise required, all control wiring shall be direct burial Type UF, No. 14 AWG copper. Splices in control wire shall be made in accordance with the requirements for service wire. Sufficient slack shall be left at each splice and point of connection in pull boxes and valve boxes so that in case of repair the valve bonnet or splice may be brought to the surface without disconnecting the wire. No splices shall be permitted under pavement.

All wiring shall be tested for continuity, open circuits, and unintentional grounds prior to connecting the equipment.

Upon completion of the work the control system shall be in operating condition with an operational chart mounted within the controller cabinet.

440.7 FLUSHING AND TESTING:

After completion and prior to the installation of any terminal fittings, the entire pipeline system shall be thoroughly flushed to remove all foreign material. After flushing, the following tests shall be conducted in the sequence listed below. All equipment, materials, and labor necessary to perform the tests shall be furnished by the Contractor and all tests shall be conducted in the presence of the Engineer.

(A) Pipeline Pressure Test. A water pressure test shall be performed on all pressure mains and laterals before any couplings, fittings, valves, and the like are concealed. All open ends shall be capped after the water is turned into the lines in such a manner that all air will be expelled. Pressure mains shall be tested with all control valves to lateral lines closed. After the pressure main test, all valves shall be opened to test lateral lines. The constant test pressure and the duration of the test are as follows:

Mains	6 hours at 125 psi
Laterals	2 hours at 100 psi

(B) Sprinkler Coverage Test. The coverage test shall be performed after sprinkler heads have been installed and shall demonstrate that each section or unit in the irrigation system is balanced to provide uniform and adequate coverage of the areas serviced. The Contractor shall correct any deficiencies in the system.

(C) Operational Test. The performance of all components of the automatic control system shall be elevated for manual and automatic operation.

During the maintenance period specified and at least 9 days prior to final acceptance, the Contractor shall set the controller on automatic operation and the system shall operate satisfactorily during this period. All necessary repairs, replacement and adjustment shall be made until all equipment, electrical work, controls and instrumentation are functioning in accordance with the contract documents.

440.8 MEASUREMENT AND PAYMENT:

Measurement and payment shall be in accordance with Section 109. The lump sum or unit prices established in the proposal sheets shall be full compensation for furnishing all labor, materials, tools and equipment, and performing all work necessary to complete the sprinkler irrigation system described or specified in the contract documents.

End of Section

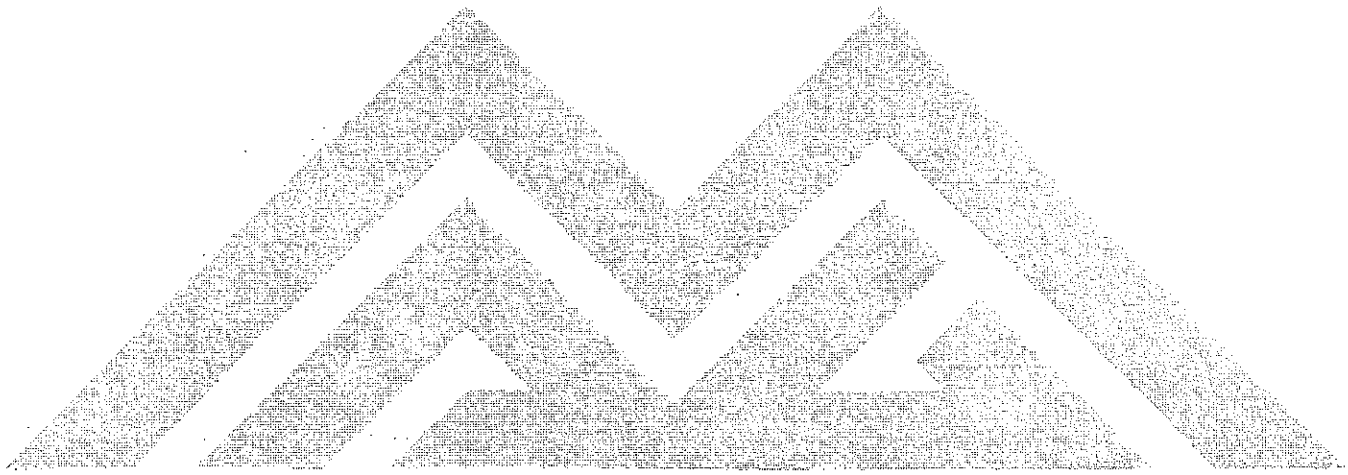

PART 500

STRUCTURES

Section	Title	
501	Driving Piles	501-1
505	Concrete Structures	505-1
506	Precast Prestressed Concrete Members	506-1
510	Concrete Block Masonry	510-1
511	Brick Masonry	511-1
515	Steel Structures	515-1
520	Steel and Aluminum Handrails	520-1
525	Pneumatically Placed Mortar	525-1
530	Painting	530-1

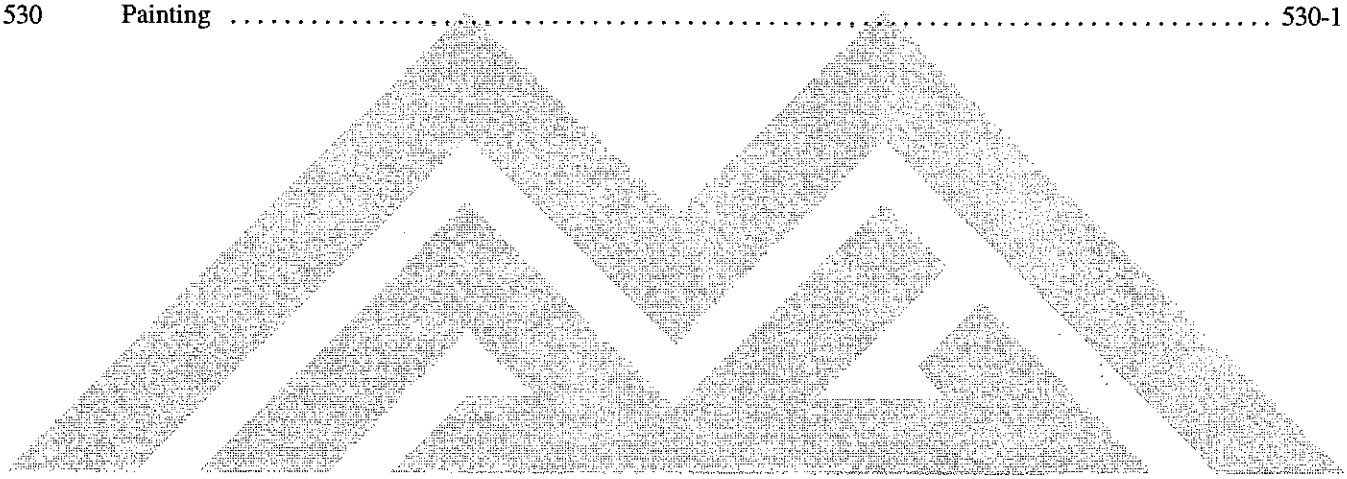

SECTION 501

DRIVING PILES

501.1 DESCRIPTION:

Piles driven under this specification shall be accurately spaced, and driven either vertically or to the prescribed batter, as indicated on the plans; no greater variation from the vertical or specified batter line than ¼ of an inch per foot of length being permitted. Piles otherwise driven, and those seriously damaged in driving shall be removed, or cut off, and replaced with new piles. Should any pile be raised by the subsequent driving of others, it shall be redriven.

The pile tip elevations shown on the plans are approximate, and are to be used as a basis for establishing quantities for piling, including exploratory piles, for bidding purpose only.

When required in the special provisions one pile of the type selected or designated for the work shall be driven in each pier and abutment area as an exploratory pile. The location of these piles shall be determined by the Engineer.

The conditions under which the exploratory piles will be driven shall be as ordered by the Engineer. These exploratory piles shall be furnished and driven by the Contractor, and under normal circumstances shall be left in place and utilized as one of the specified piles.

Exploratory piles shall be driven with the same size and type hammer operating with the same effective energy and efficiency as that to be used in driving the remainder of the piles.

The purpose of driving the exploratory piles is to determine the length and penetration that will be required in the balance of the piles. Therefore, no piles other than the exploratory piles shall be driven at each pier or abutment area until such determination has been made by the Engineer, and has been reported to the Contractor.

The Engineer shall order the tip elevation to which the piling shall be driven for the particular pier or abutment. All piles shall be driven to the tip elevation as established by the Engineer or deeper if necessary to develop the prescribed bearing value as determined by the formula prescribed below.

Required excavations in the areas through which the piles are to be driven shall be made before any pile is driven. No excavation may be made below the bottom of the pile footing elevation, unless approved by the Engineer.

When piles are to be driven through bridge approach embankment and the depth of the embankment at the pile location is in excess of 5 feet, the pile shall be driven in a hole drilled through embankment. The hole shall have a diameter of not less than the butt diameter of the pile plus 6 inches. After driving the pile, the annular space around the pile shall be filled to ground surface with dry sand or pea gravel.

No piles shall be driven within 25 feet of any concrete that has not attained a minimum compressive strength of 2000 psi.

501.2 DRIVING EQUIPMENT:

Pile hammers, shall be an approved type that develop sufficient energy to drive the pile at a penetration rate of not less than ⅛ of an inch per blow at the required bearing value and shall develop an energy per blow at each full stroke of the piston of not less than one foot pound for each pound of weight driven.

Drop hammers may be used on timber pile only. Drop hammers shall weigh not less than 3,000 pounds and shall be equipped with proper leads and hoisting equipment to handle the work efficiently. The fall of the hammer shall not exceed 10 feet.

Steam or air hammers shall be furnished with boiler or air capacity at least equal to that specified by the manufacturers of the hammers to be used. The boiler or compressor shall be equipped with an accurate pressure gauge at all times. The valve mechanism and other parts of steam or air hammers shall be maintained in first class condition so that the length of stroke and number of blows per minute for which the hammer is designed can be obtained at the required bearing value. Steam or air hammers not meeting these specifications, shall be removed from the work.

Other types of pile driving equipment may be used under conditions approved by the Engineer.

When necessary to obtain the specified penetration and with the approval of the Engineer, the Contractor may supply and operate one or more water jets and pumps, furnish the necessary drilling apparatus and drill holes not greater than the diameter of the pile to the proper depth and drive the piles as specified below.

If a pile is set in a drilled hole, it shall be driven sufficiently to fix the point firmly and secure full bearing. The use of jets at locations where the stability of embankments or other improvements would be endangered will not be permitted.

The cost of any jetting or drilling that may be required shall be included in the price bid for driving piles, or for other applicable items of work.

The use of followers, underwater hammers, or hammers not in leads will not be permitted unless authorized by the Engineer. When a follower or underwater hammer is used, one pile in each bent or footing shall be furnished sufficiently long to permit being driven without a follower or underwater hammer.

501.3 PREDRILLED HOLES:

When approved by the Engineer, piles may be driven in predrilled holes. The holes shall have a diameter not greater than the diameter of the pile at the ground surface. The depth of the predrilled hole shall be adjusted by the Contractor as directed by the Engineer as the work proceeds in order to maintain adequate bearing. Minimum penetration of the pile below the bottom of the predrilled hole shall be 5 feet unless otherwise authorized by the Engineer.

501.4 DRIVING:

During driving operations, the pile heads shall be protected and held in position by the use of a steel driving block or anvil. Timber piles shall be sound headed and square or shaped to closely fit the driving head. The heads of the piles may be protected by means of heavy steel or wrought iron rings. The heads of timber or concrete piles or casings shall be protected from direct impact of the hammer by a cushion head block. The cushion shall be maintained in good condition during the entire driving operation. This cushion driving block shall be so arranged that any reinforcing bars projecting above the piles will not be displaced or injured in driving. For driving steel H-beam piles, and shells without a mandrel for cast-in-place concrete piles, steel combination driving heads and pilots shall be used. The driving heads shall closely fit the top of the steel pile or shell and shall extend down the sides of the pile at least 4 inches. Piles materially out of lie as determined by the Engineer, shall be pulled and replaced.

501.5 BEARING VALUE:

Piles shall be driven to the penetration and bearing value shown on the plans as a minimum. Timber piles shall not be driven to a bearing value exceeding 20 tons. The bearing value shall be determined from the applicable formula in the following schedule.

(A) For piles driven with a drop hammer:

$$P = \frac{2WL}{s+1}$$

(B) For piles with a single acting steam or air hammer and open type diesel hammers:

$$P = \frac{2WL}{s+0.1} \quad \text{or} \quad P = \frac{2E}{s+0.1}$$

(C) For piles driven with a double acting steam or air hammer and closed type diesel hammer:

$$P = \frac{2L(W+ap)}{s+0.1} \quad \text{or} \quad P = \frac{2E}{s+0.1}$$

(D) For precast concrete piles:

$$P = \frac{2WL}{s+0.1\frac{W^{-}}{W}}$$ for single acting steam or air hammer and open type diesel hammers

$$P = \frac{2L\ (W+ap)}{s+0.1\frac{W^{-}}{W}} \quad or \quad P = \frac{2E}{s+0.1\frac{W^{-}}{W}}$$ for double acting steam or air hammer or closed type diesel hammer

(E) For piles driven to a batter, the safe bearing value of the pile shall be taken as U times P, the value of U being determined as follows:

$$U = \frac{0.25(4-m)}{\sqrt{1+m^2}}$$ for drop hammers

$$U = \frac{0.1(10-m)}{\sqrt{1+m^2}}$$ for steam or air hammer and diesel hammers

U = a coefficient, less than unity.

P = safe bearing load developed by the pile in pounds.

W = weight of hammer in pounds.

L = length of stroke or height of fall of the hammer in feet.

s = penetration of the pile into the ground per blow in inches, taken as the average over the last 10 blows for drop hammers and 10 to 20 for steam hammers. Penetration shall be measured at a time when there is no appreciable rebound of the hammer and preceding blow was struck upon a sound pile head or driving block.

a = effective area of the piston in square inches.

p = mean effective steam pressure in the case of steam hammers or mean effective pressure in the case of air hammers, in pounds per square inch.

E = manufacturer's rating of energy developed by the hammer in foot-pounds.

W = weight of pile in pounds.

m = tangent at the angle of batter.

501.6 CUTOFF AND EXTENSION:

Timber piles which are to be capped shall be accurately cut off so that true bearing is obtained on every pile without the use of shims. Other timber piles shall be cut off on the square at the elevation designated. Piles inaccurately cut off shall be replaced. Splicing of timber piles will not be permitted, except upon written permission of the Engineer.

The tops of treated piles, after cutoff, except piles that are to be capped with concrete, shall be treated as specified in Section 779.

Concrete piles shall be cut off at such elevation that they will extend into the cap or footing as indicated on the plans. Concrete piles may be cast the full length of the reinforcing bars, provided that the concrete is cut off to expose the steel as shown on the plans after the piles have been driven. When it is necessary after driving, to increase the length of precast concrete piles, concrete shall be removed to expose sufficient reinforcing steel to permit a lap of at least 20 diameters. The added length shall be sufficient to reach the elevation of the bottom of the cap and shall be of the same section and the same reinforcement as the pile itself, or as shown on the plans.

When concrete piles are driven or cut off below the elevation of the bottom of the cap, the pile section shall be extended to the elevation of the bottom of the cap by means of a reinforced concrete extension constructed in accordance with the details shown on the plans.

Steel shells or concrete casings for cast-in-place concrete piles shall be cut off at the designated elevations. The work of cutting off precast concrete piles or concrete casings shall be performed in such a manner as to avoid spalling or damaging the pile below cut-off. In case of sucb damage the pile shall be replaced or repaired as required by the Engineer.

All cut off lengths of piling shall become the property of the Contractor and shall be disposed of outside the project area.

501.7 LOAD TESTING:

A loading test shall consist of the continuous application of a load of twice the design load to the pile being tested. The pile shall be considered to have a bearing value equal to the design load if the permanent settlement produced by such test loading is not greater than ¼ inch.

Unless otherwise permitted by the Engineer the loading tests shall be completed before the remaining piles are cast or driven.

Under normal circumstances, if load tests are required, they shall be performed on the exploratory piles. The loading shall not be applied until 48 hours after the pile is driven and, in the case of cast-in-place piles, the concrete has attained a minimum compressive strength of 2,000 psi.

In order to conduct the prescribed loading test, the Contractor shall provide proper and suitable facilities and equipment by means of which a prescribed test load may be transmitted vertically to each pile to be so tested. Provision for varying the applied load must also be made, and the loads applied must be truly determinate and truly axial with the pile. The loading equipment or device so provided must be so constructed and arranged that any marks, gauges, dials or other instruments required to determine or measure deflection or settlement of the pile may be conveniently installed and observed without endangering either the observer or the instruments so installed.

The test loads shall be applied under the direction of the Engineer and at such rate or in such increments as he may specify. When a load test of a pile is commenced, the test shall be continuous, and the Contractor shall furnish all facilities on a 24 hour, 7 day week basis until the test is completed. Forty-eight hours after all deflection and settlement has ceased, or sooner if directed by the Engineer, the test load shall be removed at such rate or in such increments as the Engineer may direct. If the results of the above described operations indicate that excessive permanent settlement of the test pile has occurred the pile shall be driven to such additional depth as the Engineer may specify, and the above described test loading operations then repeated, if so directed by the Engineer. Each complete operation, which shall include loading and unloading as above prescribed, shall be considered as an individual test.

501.8 MEASUREMENT:

Furnishing piles will be measured by the linear foot of piles furnished in accordance with the lengths specified on the plans or ordered by the Engineer, except that no measurement for payment will be made for furnishing piles which are subsequently damaged in handling or driving to the extent that they are unusable.

No measurement for payment will be made for falsework piles.

Driving piles will be measured by the linear foot from the tip to the required cut-off point of all piles satisfactorily driven.

Splicing piles will be measured as a unit for each splice made, when splicing is required because of pile lengths driven in excess of those specified on the plans.

No measurement for payment will be made of splices made to obtain pile lengths in accordance with the plans.

Pile loading tests will be measured as a unit for each test made as specified or as directed.

501.9 PAYMENT:

The accepted quantities of piling, measured as provided above, will be paid for at the contract unit prices for furnishing piles, driving piles, splicing piles and pile loading tests.

When more than one type of piling is shown, each type will be scheduled and paid for separately.

When not otherwise provided, payment for splicing piles will be made at the contract unit price per splice arrived at by multiplying the contract unit price per linear foot for furnishing the pile by the factor five.

When test piles are specified on the plans, the bidding schedule will not contain specific items for furnishing, driving and splicing test piles. Test piles will be measured and paid for as in the case of other piles.

End of Section

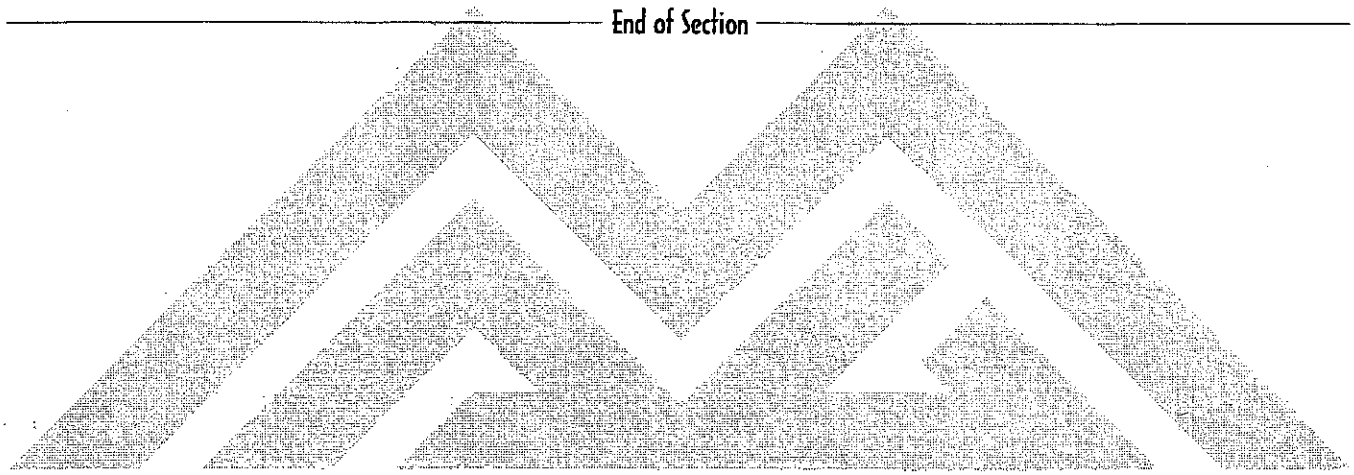

SECTION 505

CONCRETE STRUCTURES

505.1 DESCRIPTION:

Concrete bridges, culverts, catch basins, manholes, retaining walls, abutments, piers, footings, foundations and similar structures shall be constructed in conformity with the plans and specifications. Concrete for use in work constructed under this specification and testing thereof shall conform to the requirements of Section 725.

Safe and suitable ladders shall be provided to permit access to all portions of the work.

505.2 SUBGRADE FOR CONCRETE STRUCTURES:

Each subgrade upon which concrete is placed shall be firm and free from water. Ground water shall be kept several inches below subgrade until the concrete has set. When the subgrade is in dry earth, it shall be moistened with water from a spray nozzle immediately before concrete is placed.

When the design details for the project provide for the construction of filter or drain material consisting of gravel or combination of gravel and sand, which material becomes subgrade for concrete, the placing of steel reinforcement and pouring of concrete shall follow the placing of the filter or drain material as closely as practical. The filter or drain material shall be kept dewatered to the extent necessary to prevent any portion of concrete materials being carried away before the concrete has attained its final set. No payment will be made for the work required to keep such materials dewatered, other than such costs as may be included in the prices bid for various items of work or amount bid for dewatering when the schedule provides an item for same.

When concrete is to rest on rock, the rock shall be fully uncovered. The surface of the rock shall be removed to a depth sufficient to expose sound rock. Bedrock shall be roughly leveled off or cut to approximately horizontal and vertical steps. Seams in the rock shall be grouted as directed by the Engineer and the base for structures shall be slush grouted or otherwise treated as the Engineer may direct.

505.3 FORMS:

Forms shall be of suitable material and of type, size, shape, quality, and strength to enable construction as designed. The forms shall be true to line and grade, mortar tight, and sufficiently rigid to resist any appreciable amount of springing out of shape during placing of the concrete. The responsibility for their adequacy shall rest with the Contractor. All dirt, chips, sawdust, nails, and other foreign matter shall be completely removed from forms before any concrete is deposited. The surfaces of forms shall be smooth and free from irregularities, dents, sags and holes that would appreciably deface the finished surface. Forms previously used shall be thoroughly cleaned of all dirt, mortar and foreign matter before being reused, and the reuse of forms shall be subject to the approval of the Engineer. Before concrete is placed in forms, all inside surfaces of the forms shall be thoroughly treated with an approved releasing agent that will leave no objectionable film on the surface of the forms that can be absorbed by the concrete. Care shall be exercised that no releasing agent is deposited on previously placed concrete.

Forms for all surfaces that will not be completely enclosed or hidden below the permanent surface of the ground shall be made of surfaced lumber, or material which will provide a surface at least equally satisfactory. Any lumber or material which becomes badly checked or warped prior to placing concrete may be rejected.

Forms for all exposed surfaces of bridges, viaducts, overcrossings and similar structures shall be constructed of plywood or an approved equal. Plywood for forms shall be exterior type, of the grade Concrete-Form Exterior, conforming to the specifications of the NBS, Commercial Standards latest edition. Plywood shall be furnished and placed in 48 inch widths and in uniform lengths of not less than 96 inches, except where the dimension of the member formed is less than the specified panel dimension. Plywood shall be placed with the grain of the outer plies in the direction of the span. Where plywood is attached directly to the studding or joints, the panels shall be not less than ⅝ inch thick, and the studdings or joints shall be spaced not more than 12 inches, center to center. Plywood less than ⅝ inch thick, otherwise conforming to the requirements specified, may be used with a continuous backing of ⅝ inch sheathing. All form panels shall be placed in a neat, symmetrical pattern with the horizontal joints level and continuous.

Wood forms for copings and curbs shall have a thickness of not less than 1⅝ inches and a width of not less than the full depth of coping or curb.

Unless otherwise shown on the plans, all sharp edges shall be chamfered with ¾ inch triangular fillets. Forms for curved surfaces shall be so constructed and placed that the finished surface will not deviate appreciably from the arc of the curve.

Forms shall be so constructed that portions, where finishing is required, may be removed without disturbing portion of forms to remain.

Forms for girders and slabs shall be cambered as may be required by the Engineer.

Forms shall, as far as practicable, be so constructed that the form marks will conform to the general lines of the structure.

Form clamps or bolts, approved by the Engineer, shall be used to fasten forms. The use of twisted wire loop ties to hold forms in position will not be permitted, nor shall wooden spreaders be used unless authorized by the Engineer. Clamps or bolts shall be of sufficient strength and number to prevent spreading of the forms. They shall be of such type that they can be entirely removed or cut back 1 inch below the finished surface of the concrete. Forms for outside surfaces shall be constructed with stiff wales at right angles to the studs and all form clamps shall extend through and fasten such wales, all based on the rate of concrete pour.

The Contractor may at his own option, pour such portions of the concrete for the structure directly against the side of the excavation or sheathing without the use of outside forms, provided that the following conditions are met.

(A) If concrete is poured directly against the sides of the excavation, the faces of the excavation must be firm and compact, and be able to stand without sloughing off and be at all points outside the concrete lines shown on the plans.

(B) If concrete is poured against sheathing, such sheathing shall be closely fitted and shall be outside of the concrete lines shown on the plans. Those surfaces against which the concrete is to be poured shall be faced with building paper. Except as otherwise specified all sheathing shall be removed, but not until either at least 7 days after placing concrete or until the concrete has attained a strength in compression of not less than 2,000 psi. Care should be used in pulling sheathing so as to avoid damaging the concrete. Voids left by the removal of sheathing, piles and/or similar sheathing supports shall be backfilled with material having a sand equivalent of not less than 30 and consolidated by jetting as directed by the Engineer. When, in the opinion of the Engineer, field conditions or the type of sheathing or methods of construction used by the Contractor are such as to make the removal of sheathing impracticable, that portion of the sheathing against which concrete has been poured may be left in place.

Regardless of the method used in pouring concrete without outside forms the following stipulations shall hold:

(A) The reinforcing steel shall be accurately set and held firmly in place, to the satisfaction of the Engineer.

(B) No direct payment will be made for building paper, sheeting, gunite or concrete placed outside of concrete lines shown on the plans. The cost thereof shall be absorbed in the prices bid for the various items of work.

(C) The Contractor shall assume all risks of damage to the work or to existing improvements due to any reason whatsoever that may be attributable to the method of construction outlined above.

505.3.1 Removal of Forms: The falsework supporting any span of a continuous or rigid frame structure subject to bending stress shall not be released until after the last concrete placed in the span and in the adjoining spans, excluding concrete above the deck slab, has attained a compressive strength of not less than twice the design unit stress, or 21 days after the concrete is placed, whichever occurs first.

Stairway riser forms shall be removed and the finish of the steps completed on the day the concrete is placed. Metal stairway treads, if required by the plans, shall be installed immediately after the steps have been placed.

Side forms for beams, girders, columns, railings, or other members wherein the forms do not resist dead load bending shall be removed not more than 24 hours after placing concrete, where finishing is required, unless otherwise directed by the Engineer, provided that satisfactory arrangements are made to cure and protect the concrete thus exposed.

Side forms for arch rings, columns, and piers shall be removed before the members of the structure which they support are poured or placed so that the quality of the concrete may be inspected. Such forms shall be so constructed that they may be removed without disturbing other forms which resist direct load or bending stress.

Forms and shoring for box and arch sections of sewers and storm drains may be removed as follows:

(A) Forms for open channel walls — 16 hours.

(B) Outside forms of box sections and inside wall forms of box sections which do not support the slab forms — 16 hours.

(C) Arch sections in open cut — 12 hours.

(D) Slab forms for box sections:

(1) Type II Cement — 48 hours or 6 hours per foot of span between supports, whichever is greater.

(2) Type III Cement — 24 hours or 3 hours per foot of span between supports, whichever is greater.

(3) Type V Cement — 56 hours or 7 hours per foot of span between supports, whichever is greater.

The periods of time at which the Contractor may remove forms, as set forth above, are permissive only and subject to the Contractor's assuming all risks that may be involved in such removals. At his option, except for surfaces to be finished, the Contractor may leave the forms in place for such longer periods as are, in his opinion, required.

505.4 FALSEWORK:

All falsework shall be designed and constructed to provide the necessary rigidity and to support the loads. Falsework for the support of a superstructure shall be designed to support the loads that would be imposed if the entire superstructure were poured at one time.

All falsework, staging, walkways, forms, ladders, cofferdams, and similar accessories shall equal or exceed the minimum applicable safety requirements of Section 107. Compliance with such requirements shall not relieve the Contractor from full responsibility for the adequacy and safety of said items.

Falsework shall be founded upon a solid footing safe against undermining and protected from softening. When the falsework is supported on timber piles, the piles shall be driven to a bearing value as determined by the formula specified in Section 501, equal to the total calculated pile loading. The maximum calculated pile loading shall not exceed 20 tons.

Falsework and forms shall be so constructed as to produce in the finished structure the lines and grades indicated on the plans. Suitable jacks or wedges shall be used in connection with the falsework to set the forms to grade or camber shown on the plans, or to take up any settlement in the form work either before or during the placement of concrete. Single wedges for this purpose will not be permitted; it being required that all such wedges be in pairs to insure uniform bearing. Dead load deflection in stringers and joints will be compensated for by varying depths of the joists or by using varying depth nailing strips.

Arch centering shall be removed uniformly and gradually, beginning at the crown and working toward the springing, to permit the arch to take its load slowly and evenly. Centering for adjacent arch spans shall be struck simultaneously.

Falsework under any continuous unit or rigid frame shall be struck simultaneously; the supporting supports being released gradually and uniformly, starting at the center and working both ways towards the supports.

505.4.1 Falsework Design: Falsework shall be designed by the Contractor to carry all loads and pressures which may be applied to it. The construction loads to be applied are as follows:

Tunnel centering — 100 percent of the concrete load where concrete is placed by pumping. Forms shall be so constructed to provide adequate relief for excessive pump pressure.

All other structures — a live load of 30 pounds per square foot of horizontal area.

Transverse and longitudinal bracing — a horizontal force equal to 2 percent of the vertical load.

The unit stresses for wood falsework shall be those recommended in the West Coast Lumbermen's Association's standard grading and dressing rules increased 25 percent for short time loading.

Falsework may be bolted or spiked at the option of the Contractor, but the use of bolts and spikes shall not be combined in the same connection. The allowable spacings and connection values of bolts and spikes shall be in accordance with the national design specifications for stress-grade lumber and its fastenings as recommended by National Lumber Manufacturers Association except that an additional allowance of 25 percent for temporary use shall be added to the connection values for bolts and spikes.

Ends of columns bearing on wedges shall be tied in both direction by girts.

Unit stresses for steel falsework shall be in accordance with the requirements of the specifications for design, fabrication and erection of structural steel for buildings of the AISC.

505.5 PLACING REINFORCEMENT:

Reinforcing bars shall be accurately placed as shown on the plans and shall be firmly and securely held in position by wiring at intersections with wire not smaller than No. 16 gage and by using concrete or metal chairs, spacers, metal hangers, supporting wires and other approved devices of sufficient strength to resist crushing under full load. Wooden supports shall not be used.

Placing bars on layers of fresh concrete as the work progresses and adjusting bars during the placing of concrete will not be permitted. Before placing in the forms, all reinforcing steel shall be thoroughly cleaned of mortar, oil, dirt, loose mill scale, loose or thick rust and coatings of any character that would destroy or reduce the bond. No concrete shall be deposited until the placing of the reinforcing steel has been inspected and approved.

Bundle bars shall be tied together at not more than 6 foot centers.

505.5.1 Splicing: Splices of bars shall be made only where shown on the plans or as approved by the Engineer. Where bars are spliced they shall be lapped at least 30 diameters, unless otherwise shown on the plans.

Welding of reinforcing steel will not be permitted unless specifically authorized by the Engineer.

505.5.2 Bending Reinforcement: Bends and hooks in bars shall be made in the manner prescribed in the ACI, Manual of Standard Practice.

Bars shall not be bent nor straightened in a manner that will injure the material. Bars with kinks or unspecified bends shall not be used.

505.5.3 Welded Wire Fabric: Welded wire fabric shall be held firmly in place and spliced not less than 2 meshes.

505.6 PLACING CONCRETE:

Where a schedule for placing concrete is shown on the plans, no deviation will be permitted therefrom unless approved in writing by the Engineer.

The placing of concrete for a given pour shall start at the low point and shall proceed upgrade, unless otherwise permitted by the Engineer.

With the exception of concrete placed in slope paving and aprons, and concrete placed under water, all concrete shall be compacted by means of high frequency internal vibrators of a type, size and number approved by the Engineer. The number of vibrators employed shall be ample to consolidate the incoming concrete to a proper degree within 15 minutes after it is deposited

in the forms. In all cases, at least 2 vibrators shall be available at the site of the structure in which more than 25 cubic yards of concrete is to be placed. The vibrators shall not be attached to or held against the forms or the reinforcing steel. The locations, manner and duration of the application of the vibrators shall be such as to secure maximum consolidation of the concrete without causing segregation of the mortar and coarse aggregate, and without causing water or cement paste to flush to the surface. Fresh concrete shall be spread in horizontal layers insofar as practicable and the thickness of the layers shall not be greater than can be satisfactorily consolidated with the vibrators. If additional concrete is to be placed, care shall be taken to remove all laitance and to roughen the surfaces of the concrete to insure that fresh concrete is deposited upon sound concrete surfaces. Layers of concrete shall not be tapered off in wedge-shaped slopes, but shall be built with square ends and level tops.

Mixed concrete, after being deposited, shall be consolidated until all voids are filled and free mortar appears on the surface. The concrete shall be placed as nearly as possible in its final position and the use of vibrators for extensive shifting of the mass of fresh concrete will not be permitted.

Fresh concrete shall not be permitted to fall from a height greater than 6 feet without the use of adjustable length pipes or elephant trunks.

The use of approved external vibrators for compacting concrete will be permitted when the concrete is inaccessible for adequate compaction provided the forms are constructed sufficiently rigid to resist displacement or damage from external vibration.

During the placing of concrete, care shall be taken that methods of compaction used will result in a surface of even texture free from voids, water or air pockets, and that the coarse aggregate is forced away from the forms in order to leave a mortar surface. Spades or broad-tined forks shall be provided and used to produce the desired results if required by the Engineer.

The use of chutes in conveying or depositing concrete will be allowed only at the discretion of the Engineer, and wherever they are used they shall be laid at such inclination as will permit the flow of concrete of such consistency as is required. The use of additional water in mixing the concrete to promote free flow in chutes of low inclination will not be allowed. Where necessary in order to prevent segregation, chutes shall be provided with baffle boards or a reversed section at the outlet.

Columns shall be poured preferably through pipes of adjustable length and not less than 6 inches in diameter.

Horizontal members or sections shall not be placed until the concrete in the supporting vertical members or sections has been consolidated and a minimum 2 hour period has elapsed to permit shrinkage to occur.

Walkways shall be provided along each side and for the full length of bridge structures outside the deck area. These walkways shall be of sufficient width, and so constructed as to provide for the support of the bridges from which the longitudinal floats specified are to be operated. Inspection walkways and access thereto shall be provided under the deck forms between each pair of girders and outside of each outside girder for the full length of the bridge structure. The walkways shall be not more than 8 feet below the concrete to be inspected.

505.6.1 Joints: The work shall be so prosecuted that construction joints will occur at designated places shown on plans unless specifically permitted otherwise by the Engineer. The Contractor shall complete, by continuous depositing of concrete, section for the work comprised between such joints. The joints shall be kept moist until adjacent concrete is placed.

All construction joints at the bottom of walls or arches, at the top of walls, and all longitudinal construction joints having a keyed, stepped or roughened surface shall be cleaned by sandblasting prior to pouring the adjacent concrete. Any quality of sand may be used which will accomplish the desired results.

The sandblasting operations shall be continued until all unsatisfactory concrete, and all laitance, coatings, stains, debris, and other foreign materials are removed. The surface of the concrete shall be washed thoroughly to remove all loose material. The method used in disposing of waste water employed in washing the concrete surfaces shall be such that the waste water will not stain, discolor, or affect exposed surfaces of the structures. The method of disposal will be subject to the approval of the Engineer.

All horizontal construction joints or those on slight slopes, shall be covered with Class D mortar as specified in Section 776.

Expansion and contraction joints in the concrete structures shall be formed where shown on the plans and as directed. In general, such joints shall have smooth abutting surfaces, painted or separated and sealed as detailed on the plans. No reinforcement shall be extended through the joints, except where specifically noted or detailed on the plans. Concrete or mortar shall not be permitted to lap these joints in such a manner as to effect a tie or bond that would later promote spalling.

Asphalt paint or premolded asphalt filler used in joints shall be as specified in Section 729.

No direct payment will be made for furnishing and placing asphaltic paint, premolded asphaltic filler or other types of joint separators; their costs shall be included in the price bid for the item of work of which they are a part.

505.6.2 ADVERSE WEATHER CONCRETING:

(A) Hot Weather Concreting: Hot weather is defined as any combination of high ambient temperature, low relative humidity, and wind velocity which would tend to impair the quality of fresh concrete. These effects become more pronounced as wind velocity increases. Since last minute improvisations are rarely successful, preplanning and coordination of all phases of the work are required to minimize these adverse effects.

As an absolute minimum, the Contractor shall insure that the following measures are taken:

1. An ample supply of water, hoses, and fog nozzles are available at the site.

2. Spare vibrators are on hand in the ratio of one spare vibrator for each three in use.

3. Preplanning has been accomplished to insure prompt placement, consolidation, finishing, and curing of the concrete.

4. Concrete temperature on arrival should be approximately 60°F. and in any event shall not exceed 90°F. The use of cold water and ice is recommended.

5. The subgrade is moist, but free of standing water.

6. Fog spray is utilized to cool the forms and steel.

Under extreme conditions of high ambient temperature, exposure to the direct rays of the sun, low relative humidity, and wind, even strict adherence to these measures may not produce the quality desired and it may be necessary to restrict concrete placement to early morning only. If this decision is made, then particular attention must be directed to the curing process since the concrete will be exposed to severe thermal stresses due to temperature variation; heat of hydration plus midday sun radiation versus nighttime cooling.

(B) Cold Weather Concreting: Concrete shall not be placed on frozen ground, nor shall it be placed when the ambient temperature is below 40°F. unless adequate means are used to heat the aggregate and/or water and satisfactory means have been taken for protecting and heating the concrete during the curing period.

(C) Wet Weather Concreting: Placing of concrete shall be discontinued when the quantity of rainfall is such as to cause a flow or wash to the surface. Any concrete already placed and partially cured shall be covered to prevent dimpling. A construction joint will be installed prior to shut down.

(D) Replacement of Damaged or Defective Concrete: Upon written notice from the Engineer, all concrete which has been damaged or is defective, shall be replaced by the Contractor at no cost to the Contracting Agency.

(E) Recommended Reference:
1. ACI-305 Hot Weather Concreting
2. ACI-306 Cold Weather Concreting
3. ACI-308 Recommended Practices for Curing Concrete

505.7 CONCRETE DEPOSITED UNDER WATER:

When conditions render it impossible or inadvisable in the opinion of the Engineer to dewater excavation before placing concrete, the Contractor shall deposit under water, by means of a tremie or underwater bottom dump bucket, a layer of concrete of sufficient thickness to thoroughly seal the cofferdam. To prevent segregation the concrete shall be carefully placed in a compact mass and shall not be disturbed after being deposited. Water shall be maintained in a still condition at the point of deposit.

A tremie shall consist of a water tight tube having a diameter of not less than 10 inches with a hopper at the top. The tube shall be equipped with a device that will close the discharge end and prevent water from entering the tube while charging the tube with concrete. The tremie shall be supported so as to permit free movement of the discharge end over the entire top surface of the work and to permit rapid lowering, when necessary to retard or stop the flow of concrete. The discharge end shall be closed at the start of the work to prevent water entering the tube and shall be entirely sealed at all times, except when concrete is being placed. The tremie tube shall be kept full of concrete. When a batch is dumped into the hopper, the flow of concrete shall be induced by slightly raising the discharge end, always keeping it in the deposited concrete. The flow shall be continuous until the work is completed and the resulting concrete seal shall be monolithic and homogeneous.

The underwater bucket shall have an open top and the bottom doors shall open freely and outward when tripped. The bucket shall be completely filled and slowly lowered to avoid back wash and shall not be dumped until it rests on the surface upon which the concrete is to be deposited. After discharge, the bucket shall be raised slowly until well above the concrete.

Concrete deposited in water shall have 10 percent extra cement added.

505.8 CURING:

As soon after the completion of the specified finishing operations as the condition of the concrete will permit without danger of consequent damage thereto, all exposed surface shall either be sprinkled with water, covered with earth, sand or burlap; sprayed with a curing compound or sealed with a material conforming with Section 726. All concrete for bridge structures shall be water cured unless otherwise permitted by the Engineer.

Concrete that is water cured must be kept continuously wet for at least 10 days after being placed; preferably being covered, if possible, with at least 2 layers of not lighter than 7 ounce burlap, except that handrail, baserail, railing posts, tops of walls, and similar parts of the structure, if water cured, must be covered with burlap as above prescribed, immediately following the finishing treatment specified therefor, and such covering shall not be removed in less than 4 days. Roadway areas, floors, slabs, curbs, walks, and the like, that are water cured may be covered with sand to a depth of at least 2 inches, in lieu of the burlap as specified above, as soon as the condition of the concrete will properly permit, and such covering must remain wet and in place until the concrete so covered is at least 10 days old unless otherwise directed by the Engineer or provided by special provisions.

When a sprayed impervious membrane is used, it shall be applied under pressure through a spray nozzle in such manner and quantity as to entirely cover and seal all exposed surfaces of the concrete with a uniform film. To insure complete coverage, membrane shall be applied in two applications for a total coverage of 150 square feet per gallon. The membrane, however, shall not be applied to any surface until all of the finishing operations have been completed; such surfaces being kept damp, until the membrane is applied. All surfaces on which a bond is required, such as construction joints, shear planes, reinforcing steel, and the like, shall be adequately covered and protected before starting the application of the sealing medium in order to prevent any of the membrane from being deposited thereon; and any such surface with which the seal may have come in contact shall immediately thereafter be cleaned. Care shall be exercised to avoid and prevent any damage to the membrane seal during the curing period. Should the seal be broken or damaged before the expiration of 10 days after the placing of the concrete, the break shall be immediately repaired by the application of additional impervious membrane over the damaged area.

Should any forms be removed sooner than 10 days after the placing of the concrete, the surface so exposed shall either be immediately sprayed with a coating of the membrane seal, or kept continuously wet by the use of burlap or other suitable means until such concrete has cured for at least 10 days.

When tops of walls are cured by the membrane sealing method the side forms, except metal forms, must be kept continuously wet for the 10 days following the placing of the concrete.

If due to weather conditions, materials used, or for any other reason, there is any likelihood of the fresh concrete checking or cracking prior to the commencement of the curing operations, it shall be kept damp, but not wet, by means of an indirect fine spray of water until all danger of such checking or cracking is past, or until the curing operations are started in the particular area affected.

Since hot weather leads to more rapid drying of concrete, protection and curing are far more critical than in cool weather. Water curing should be used wherever it is practical and should be continuous to avoid volume changes due to alternation of wetting and drying. The need for adequate continuous curing is greatest during the first few hours after placement of concrete in hot weather.

505.9 FINISHING CONCRETE:

Immediately after the removal of forms as provided above, all concrete surfaces shall be finished in accordance with the requirements specified below.

All surfaces scheduled to be covered with backfill shall be finished so as to be free of open and rough spaces.

All surfaces that will remain exposed in the completed work shall be finished so as to be free of open and rough spaces, depressions or projections. All angles and fillets shall be sharp and true and the finished surface shall present a pleasing appearance of uniform color.

All top surfaces of walls, abutments, piers, etc., shall be finished to a smooth surface and shall be cured by an approved method.

If rock pockets or honeycomb are of such an extent and character as to affect materially the strength of the structure and to endanger the steel reinforcement the Engineer may declare the concrete defective and require the removal and replacement of that portion of the structure affected by the Contractor at no additional cost to the Contracting Agency.

If finishing operations are not carried out as set forth below, all placing of concrete shall stop until satisfactory arrangements are made by the Contractor to promptly correct defective finishing work and to carry out finishing operations as specified.

One of the classes of finish as specified shall be applied to the various surfaces as set forth under applicability of finishes.

No finishing or patching shall be permitted until the surface has been inspected by the Engineer.

505.9.1 Finishing Fresh Concrete in Bridge Decks: Upon placing the deck to a uniform and true surface, screed supports shall promptly be removed from the surface and any necessary hand finishing shall be promptly accomplished in the areas where the screed supports have been removed.

After final floating of the plastic concrete, bridge decks subject to vehicular traffic shall be textured transversely. Apparatus producing textured grooved shall be mechanically operated from an independent self-propelled bridge. Grooves shall be 1/16 to 1/8 inch in width and 3/32 to 6/32 in depth. Center to center spacing of the grooves shall be as follows: 7/8", 3/4", 1", 3/4", 1-1/8" and then repeated, or other measurements as approved by the Engineer. Texturing shall be completed before surface of concrete is torn or unduly roughened by texturing operation. Grooves that close following texturing will not be permitted and will have to be retextured. Hand tine brooms shall be available on the job site, at all times during texturing operation, to repair faulty texturing grooves.

The finished surface will be tested with a 10 foot straightedge furnished by the Contractor. The testing will be accomplished by holding the straightedge in contact with the deck surface and parallel to the centerline. The surface shall not vary more than ⅛ inch from the lower edge of the straightedge. Areas showing high spots of more than ⅛ inch shall be corrected by cutting or planing. The cutting or planing machine shall be a rotary type, equipped with an adjustable cutter and having a minimum wheel base of 10 feet. Areas showing low spots of more than ⅛ inch shall be filled with an approved mixture of sand, cement and epoxy. The mixture shall firmly adhere to the surface and shall match the surrounding concrete. All areas corrected shall not show deviations in excess of ⅛ inch when tested with a 10 foot straightedge.

505.9.2 Finishing Fresh Concrete in Sidewalks and Bridge Sidewalks: After the concrete has been placed and spread between the forms, it shall be thoroughly worked until all the coarse aggregate is below the surface and the mortar comes to the top. Concrete may be consolidated by means of mechanical vibrators approved by the Engineer.

The surface shall then be struck off and worked to grade and cross section with a wood float.
A mechanical finishing machine that will consolidate the concrete and strike off and finish the surface may be used if permitted by the Engineer, provided that the machine produces a sidewalk equal to or better in all respects than that produced by the methods specified herein.

The surface shall be sweat finished by means of a steel trowel or light broom finished.

The sidewalks shall be marked and edged with the proper tools to form the joints, marking and edges shown on the plans.

505.9.3 Finishing Green Concrete: Class I Finish — All bolts, wires and rods shall be clipped and recessed. All holes, honeycomb, rock pockets and other surface imperfections shall be cleaned out, thoroughly moistened and carefully patched with mortar. Mortar shall be composed of 1 part of cement and 2 parts of fine sand. A portion of the required cement for mortar shall be white as required to match the color of the surrounding concrete.

Class II Finish — The surface shall be patched and pointed as specified above for Class I Finish and then promptly covered with polyethylene film, wet burlap or wet cotton mats. If polyethylene film is used, the film shall be held securely to the surface by means of weights, adhesive or other suitable means. Only white polyethylene film for covering will be acceptable.

When the mortar used in patching and pointing has set sufficiently, the surface shall be uncovered and thoroughly rubbed with either a float or a carborundum stone until the surface is covered with a lather. Cork, wood or rubber floats shall be used only on surfaces sufficiently green to work up such lather, otherwise a carborundum stone shall be used. During the rubbing process, a thin grout composed of 1 part cement and 1 part of fine sand may be used to facilitate producing a satisfactory lather; however, this grout shall not be used in quantities sufficient to cause a plaster coating to be left on the finished surface. A portion of the required cement for grout shall be white as required to match the color of the surrounding concrete. Rubbing shall continue until irregularities are removed and there is no excess material. At the time a light dust appears, the surface shall be brushed or sacked. Brushing or sacking shall be carried in one direction so as to produce a uniform texture.

Class III Finish — The surface shall be treated as specified above under Class II Finish except that after brushing, the surface shall again be securely covered with polyethylene film, wet burlap or wet cotton mats. In not less than 1 day nor more than 4 days, the surface shall be uncovered and rubbed with a carborundum stone. This rubbing shall continue until the entire surface is of a smooth texture and uniform color. During the process, the use of a thin mixture of equal parts of sand and cement with water will be permitted. At the time a light dust appears, the surface shall be brushed or sacked, care being taken to carry this brushing in one direction so as to produce a uniform texture.

505.9.4 Finish Hardened Concrete: If for reasons either beyond the control of the Contractor or with the approval of the Engineer, more than 6 days have elapsed between the time of placing concrete and the time of the removal of forms, the concrete shall be considered as hardened. Prior to finishing hardened concrete, the surface shall be covered with burlap or cotton mats and kept thoroughly wet for a period of at least 1 hour. Finishing shall be identical to the respective requirements for Class I, Class II and Class III Finish for green concrete, except that the use of a mechanically operated carborundum stone will be required for Class II and Class III Finishes.

505.9.5 Applicability of Finishes: Surfaces requiring Class I Finish — All formed structures that are to be covered by backfill and those surfaces that are normally not in view of either vehicular or pedestrian traffic such as the surfaces on the inside of barrels of culverts, the under surfaces of decks, surfaces of concrete girders, piers and abutment walls.
Surfaces requiring Class II Finish — All exposed surfaces of headwalls, wingwalls, deck edges on culverts, end of piers on bridges and culverts, retaining walls and those vertical surfaces under highway grade separation structures that are exposed to view of the traveling public, including piers and pier caps, the outside face of outside girders, and other similar surfaces.

When surfaces of uniform texture and pleasing appearance are obtained through the use of first class metal forms, paper tubing or the use of special form coatings and the use of special care, such surfaces may, upon approval of the Engineer, be excluded from the surfaces requiring Class II Finish.

Surfaces requiring Class III Finish for bridge structures — All formed or finished surfaces above the surface of the deck on the roadway side of the handrail and the outside vertical surfaces from the top of handrail and dado to the lower edge of the chamfer at the bottom of the deck.

505.10 PAYMENT:

Payment for portland cement concrete structures will be made in conformity with the terms of the contract and will be based on unit prices and/or lump sums as set forth in the proposal. Such payment shall include full compensation for furnishing all labor, materials, tools and equipment, preparation of subgrade for placing of concrete and doing all work required to construct the structures in conformity with the plans and specifications.

Where concrete is scheduled for payment on the basis of cubic yards, the calculation of the quantity of concrete for payment will be made only to the neat lines of the structures as shown on the plans and on the basis of the concrete having the specified lengths, breadths, and thicknesses. However, all concrete shall be placed to line and grade within such tolerances as, in the opinion of the Engineer, are reasonable and acceptable for the type of work involved. The quantity of such concrete will be calculated considering the mortar used to cover construction joints as being concrete and no deductions will be made for rounded or beveled edges, space occupied by reinforcing steel, metal inserts, or openings 5 square feet or less in area. The cost of cement used in mortar for covering construction joints, patching, or other uses in the structure being constructed, in excess of that required for the design mix of the adjacent concrete, shall be absorbed in the item of work of which said mortar is a part.

End of Section

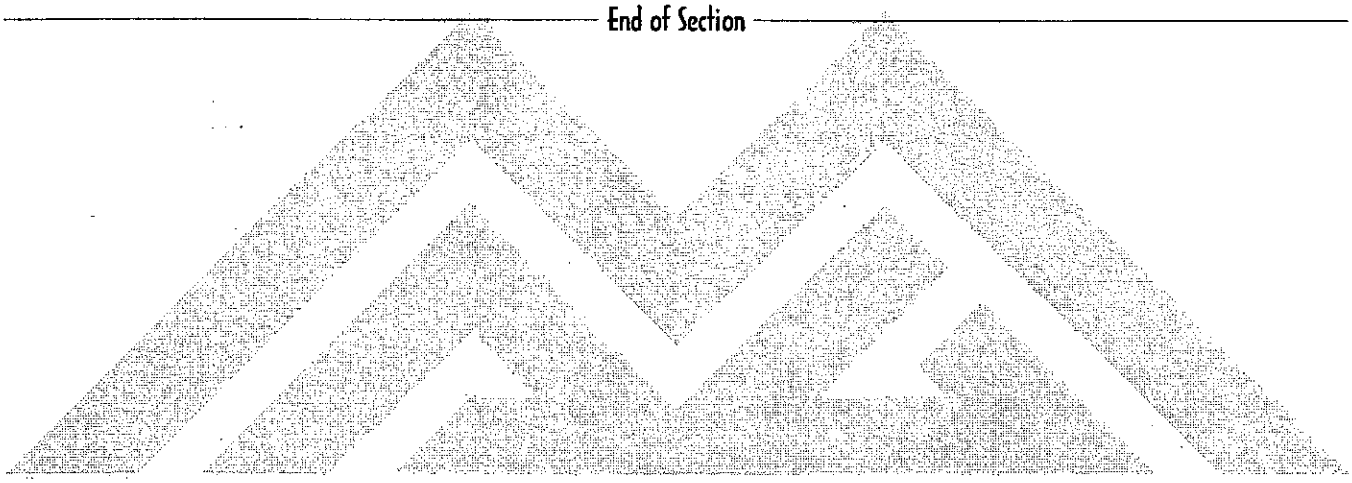

SECTION 506

PRECAST PRESTRESSED CONCRETE MEMBERS

506.1 DESCRIPTION:

This work shall consist of furnishing and placing precast prestressed concrete members in accordance with the details shown on the plans, and as provided in these specifications and special provisions.

This work shall include the manufacture, transportation and storage of girders, slabs, piling, and other structural members of precast prestressed concrete and shall also include the placing of all precast prestressed concrete members, except piling which shall be placed as provided for concrete piling.

The members shall be furnished complete including all concrete, prestressing steel, bar reinforcing steel, and incidental materials in connection therewith.

Prestressing may be performed by either pretensioning or posttensioning methods. The method of prestressing to be used shall be optional with the Contractor, subject to the requirements provided in these specifications.

Prior to casting any members to be prestressed, the Contractor shall submit to the Engineer for review complete details of the method, materials and equipment he purposes to use in the prestressing operations, including any additions or rearrangement of reinforcing steel from that shown on the plans. Such details shall outline the method and sequence of stressing and shall include complete specifications and details of the prestressing steel and anchoring devices, anchoring stresses, type of enclosures, and all other data of the prestressing steel in the members, pressure grouting materials and equipment. For any rearrangement of prestressing tendons the stress calculations shall be submitted for approval by the Engineer.

506.2 CONCRETE:

Concrete construction shall conform to the provisions in Section 505.

The Contractor shall be responsible for furnishing concrete for prestressed members which contains not less than 611 nor more than 752 lbs., of cement per cubit yard of concrete, which is workable and which conforms to the strength requirements specified. Batch proportions shall be determined by the Contractor.

The compressive strength of the concrete will be determined from concrete test cylinders cured under conditions similar to those affecting the member.

The use of admixtures for the purpose of producing high strength at an early date shall be subject to the approval of the Engineer. In no case shall calcium chloride or any additive containing calcium chloride be used in concrete for prestressed construction.

Concrete shall not be deposited in the forms until the Engineer has inspected the placing of the reinforcement, enclosures, anchorages, and prestressing steel.

The concrete shall be vibrated internally or externally, or both, as required to consolidate the concrete. The vibrating shall be done with care and in such a manner that displacement of reinforcement, enclosures, and prestressing steel will be avoided.

Holes for anchor bars, and for diaphragm dowels which pass through the member, openings for connection rods, recesses for grout and holes for railing bolts shall be provided in the members in accordance with the details shown on the plans. Where diaphragm dowels do not pass through the member, the dowels may be anchored in the member by embedment in the concrete or by means of an approved threaded insert.

Forms for interior cells or voids in the members shall be constructed of a material that will resist breakage or deformation during the placing of concrete and will not materially increase the weight of the member.

Forms may be removed when permitted by the Engineer provided that the concrete is not damaged in so doing and that adequate curing is provided. The members shall be properly supported to prevent dead load bending at all times prior to initial tensioning. After prestressing, the members shall be handled or supported at or near the final bearing points for storage.

The members shall be supported in transporting in a manner that will allow reasonable conformity to the proper bearing points with consideration for limitations of adequate hauling equipment. At all times members shall be handled or supported securely in an upright position, avoiding tipping or racking.

Lifting devices shall not project above the surface of the member after erection unless they will be imbedded in a subsequent concrete pour, have a minimum concrete cover of 2 inches and do not interfere with the placement of reinforcing steel or concrete.

The steam curing method or other approved methods may be used for curing precast prestressed concrete members in lieu of water curing. Steam curing, if elected by the Contractor, shall conform to the following provisions:

(A) After placement of the concrete, members shall be held for a minimum 2-hour presteaming period. The initial application of the steam shall be from 2 to 4 hours after the final placement of concrete to allow the initial set of the concrete to take place.

(B) All exposed surfaces of the members shall be kept wet continuously during the holding and curing period.

(C) The steam shall be saturated below pressure and shall be distributed uniformly over all exposed surfaces of the member and shall not impinge on the exposed concrete surfaces.

(D) The steam hood shall be equipped with temperature recording devices that will furnish an accurate continuous permanent record of the temperatures under the hood during the curing period. The position of the temperature devices shall be approved by the Engineer.

(E) During application of the steam the ambient air temperature shall increase at a rate not to exceed 40°F. per hour until a maximum temperature of from 140°F. to 160°F. is reached. The maximum temperature shall be held until the concrete has reached the desired strength.

506.3 PRESTRESSING STEEL:

Prestressing steel shall be high-tensile wire conforming to ASTM A-421, high-tensile wire strand confirming to ASTM A-416, or high-tensile strength alloy bars conforming to the following requirements:

High-tensile strength alloy bars shall be thermal stress relieved to produce suitable metallurgical structure and shall be individually proof-tested during the process of manufacturing to a minimum of 90 percent of the manufacturer's minimum guaranteed ultimate strength. The mechanical properties of the completed bars shall be as follows:

	Regular Grade	Special Grade
Ultimate tensile strength psi. min.	145,000	160,000
Yield strength, measured by the 0.7 percent extension under load method, psi. min.	130,000	140.000
Elongation in 20 bar diameters after rupture, percent, minimum	4.0	4.0
Reduction of area, percent, min.	25.0	20.0
Modulus of elasticity at 70 percent of the manufacturer's minimum guaranteed ultimate strength psi.min.	25×10^6	25×10^6

Diameter tolerances shall conform to ASTM A-29

Bars of different ultimate strength shall not be used interchangeably in the same member, unless otherwise permitted by the Engineer.

In handling and shipping bars, every care shall be taken to avoid bending, injury from deflection, scraping or overstressing of the bars. All damaged bars will be rejected.

All wire and strand to be post-tensioned shall be:

(A) Protected from corrosion during shipping by a factory treatment or processing.

(B) Protected against abrasion during shipment and handling.

Wires shall be arranged to produce equal stress in all wire of wire groups or parallel lay cables that are to be stressed simultaneously or when necessary to insure proper positioning in the enclosures.

Where wires are to be button-headed, the buttons shall be cold formed symmetrically about the axes of the wires, and shall develop the full strength of the wire. No cold forming process shall be used that causes indentations in the wire.

When the button-headed wire assembly is tested as a unit in tension at least 90 percent of the failures at or above the minimum guaranteed ultimate strength of the wire shall occur in the wire and not in the buttons.

All prestressing steel shall be protected against rust and other corrosion and damage and shall be free of all dirt, scale and pits due to rust, oil, grease and other deleterious substances when finally encased in concrete or grouted in the member.

506.4 ANCHORAGES AND DISTRIBUTION:

All post tensioned prestressing steel shall be secured at the ends by means of approved anchoring devices. The anchors shall be of such nature that they will not kink, neckdown or otherwise damage the prestressing steel.

The load from the anchoring device shall be distributed to the concrete by means of approved devices that will effectively distribute the load to the concrete.

Anchoring devices for all post-tensioned prestressing steel shall be of the permanent type.

Where the end of a post-tensioned assembly will not be covered by concrete, the anchoring devices shall be recessed so that the ends of the prestressing steel and all parts except tendons of the anchoring devices will be at least 2 inches inside of the end surface of the members, unless a greater embedment is shown on the plans. Following post-tensioning, the recesses shall be filled with grout, and finished flush.

When headed wires are used, the outside edge of any hold for prestressing wire through a stressing washer or through an unthreaded bearing ring or plate shall not be less than ¼ inch from the root of the thread of the washer or from the edge of the ring or plate.

Distribution plates or assemblies shall conform to the following requirements:

(A) The final unit compressive stress on the concrete directly underneath the plate or assembly shall not exceed 3,000 psi, and a suitable grillage of reinforcing steel shall be used in the stressed area.

(B) Bending stresses in the plates or assemblies induced by the pull of the prestressing steel shall not exceed design working stress, as determined by the Engineer, in the anchorage plate when 100 percent of the ultimate load is applied.

(C) Materials and workmanship shall conform to the requirements in Section 515.

Should the Contractor elect to furnish anchoring devices of a type which are sufficiently large and which are used in conjunction with a steel grillage imbedded in the concrete that effectively distributes the compressive stresses to the concrete and steel distribution plates or assemblies may be omitted.

506.5 ENCLOSURES:

Enclosures for prestressing steel shall be metallic and mortar-tight and shall be accurately placed at the locations shown on the plans or approved by the Engineer.

In lieu of metallic enclosures, openings for prestressing steel may be formed by means of cores or ducts composed of rubber or other suitable materials that can be removed prior to installing prestressing steel.

All enclosures or openings or anchorage assemblies shall be provided with pipes or other suitable connections for the injection of grout after prestressing.

506.6 PRESTRESSING:

All prestressing tendons shall be tensioned by the use of equipment allowing actual elongation to be measured directly and using a hydraulic ram equipped with an accurate method of determining the tensioning force applied using one of the following methods; a gauge measuring the internal hydraulic pressure of the ran, or force exerted by the ram; a spring-type dynamometer used with the tensioning force applied directly; an electronic load cell used with the tensioning force applied directly. Readings taken from any one of these gauges shall be converted to actual tensioning forces through the use of calibrated values taken from a certified chart from a recent calibration. All gauges shall be of sufficient size and adequately made to allow accurate readings to be made of load increments of 1 percent of the total capacity of the ram used, not to exceed 2 percent of the tensioning force used.

The force in each tendon as obtained from the calibrated value shall be compared with the tensioning force obtained from calculation using the modulus of elasticity, cross-sectional area and length of tendon for the actual net elongation measured directly. When there is a difference between the values in excess of 5 percent final anchorage of the tendon shall be delayed until the reason for the discrepancy is found and appropriate correction is made to reduce the difference to 5 percent or less. Within the allowable difference, final anchorage shall be made when the required tensioning force is obtained according to the elongation used in pretensioning and according to the corrected gauge reading in post-tensioning.

The tensioning of prestressing steel in any post-tensioned member and the cutting or releasing of prestressing steel in any pretensioned member shall not be performed until tests on concrete cylinders indicate that the concrete in the member has attained a compressive strength of not less than the value shown on the plans for transfer strength.

Subject to prior approval by the Engineer, a portion of the total prestressing force may be applied to a member when the strength of the concrete in the member is less than the value shown on the plans and the member may then be moved. Approval by the Engineer of such partial prestressing and moving shall in no way relieve the Contractor of full responsibility for successfully constructing the members.

The cutting and releasing of prestressed steel in pretensioned members shall be performed in such an order that lateral eccentricity of prestress will be a minimum. The prestressing steel shall be cut off flush with the end of the member and the exposed ends of the prestressing steel shall be heavily coated with roofing asphalt or coal tar.

Post-tensioning will not be permitted until it is demonstrated to the satisfaction of the Engineer that the prestressing steel is free and unbonded in the enclosure.

The tensioning process as applied to post-tensioned members shall be so conducted that tension being applied and the elongation of the prestressing steel may be measured at all times. A record shall be kept of gauge pressures and elongations at all times and shall be submitted to the Engineer for approval.

Draped prestressing steel in post-tensioned members shall be tensioned by simultaneous jacking at each end of the assembly, except where low frictional forces permit tensioning from one and as determined by the Engineer.

Determination of the jacking stresses shall be supported by calculations, or both calculations and field tests when specified, prepared by the Contractor. The Contractor shall submit his calculations to the Engineer for approval, and prior to making field tests shall submit details of his proposed gauges and load devices for determining the jacking load at each end of the test prestressing unit to the Engineer for approval. The stress at the center will be calculated from the average of the end test loads, when tests are required. Jacking stresses within 2 percent of the specified values will be considered satisfactory.

The following friction coefficients shall be used in calculating friction losses. K represents the wobble of the ducts, and U represents the curvature in draped cables:

Type of Steel	Type of Duct	K	U
Bright metal wire or strand	Bright metal	0.002	0.30
	Galvanized	0.0015	0.25
Bright metal bars	Bright metal	0.0003	0.20
	Galvanized	0.0002	0.15

The maximum temporary tensile stress (jacking stress) in prestressing steel shall not exceed 75 percent of the ultimate tensile strength of the prestressing steel. The prestressing steel shall be anchored at stresses (initial stress) that will result in the ultimate retention of working forces of not less than those shown on the plans but in no case shall the initial stress exceed 70 percent of the ultimate tensile strength of the prestressing steel.

506.7 BONDING AND GROUTING:

Post-tensioned prestressing steel shall be bonded to the concrete by pressure grouting the enclosures or openings.

All prestressing steel to be bonded to the concrete shall be free of scale and pits due to rust, dirt, oil, grease and other deleterious substances.

Grouting equipment shall be capable of grouting to a pressure of at least 100 psi. The grouting shall consist of neat cement and water conforming to the provisions in Section 725. The grout shall completely fill the enclosure or opening.

All enclosures or openings shall be clean and free of all foreign materials that would impair bonding of the grout. Each enclosure or opening shall be thoroughly flushed out with water and blown out with air or cleaned by other approved methods immediately prior to grouting.

After post-tensioned prestressing steel has been pressure grouted, the member shall not be moved or otherwise disturbed until at least 24 hours have elapsed.

506.8 SAMPLES FOR TESTING:

Sampling and testing shall conform to the specifications or ASTM A-416 and A-421 as provided in this specification.

Samples from each size and each lot of prestressing steel wires and bars, from each manufactured reel of prestressing steel strand, and from each lot of anchorage assemblies and bar couplers to be used shall be furnished for testing.

All wire or bars of each size from each mill lot and all strand from each manufactured reel to be shipped to the site shall be assigned an individual lot number and shall be tagged in such a manner that each such lot can be accurately identified at the job site. Each lot of anchorage assemblies and bar couplers to be installed at the site shall be likewise identified. All unidentified prestressing steel, anchorage assemblies or bar couplers received at the site will be rejected.

The following samples of material and tendons, selected by the Engineer from the prestressing steel at the plant or job site, shall be furnished by the Contractor to the Engineer well in advance of anticipated use:
(A) For wire or strand one 7 foot long sample shall be furnished for each heat or reel and for bars one 6 foot long sample shall be furnished for each heat.

(B) If the prestressing tendon is to be prefabricated, one completely fabricated prestressing tendon 5 feet in length for each size of tendon shall be furnished, including anchorage assemblies. If the prestressing tendon is to be assembled at the job site, sufficient wire or strand and end fittings to make up one complete prestressing tendon 5 feet in length for each size of tendon shall be furnished, including anchorage assemblies.

(C) If the prestressing tendon is a bar, one 6 foot length complete with one end anchorage shall be furnished and in addition if couplers are to be used with the bars two 3 foot lengths of bar equipped with one coupler and fabricated to fit the coupler shall be furnished.

Prestressing systems previously tested and approved need not be furnished as complete tendon samples, provided there is no change whatsoever in the material, design or details previously approved. Shop drawings shall contain an identification of the project on which approval was obtained, otherwise sampling will be necessary.

For prefabricated tendons, the Contractor shall give the Engineer at least 10 days notice before commencing the installation of end fittings or the heading of wires. The Engineer will inspect all end fitting installations and wire headings while such fabrication is in progress at the plant and will arrange for all required testing of the material to be shipped to the site.

No prefabrication tendon shall be shipped to the site without first having been released by the Engineer, and each tendon shall be tagged before shipment for identification purposes at the site. All unidentified tendons received at the site will be rejected.

Job site or site as referred to herein shall be considered to mean the location where the members are to be manufactured whether at the project site or a removed casting yard.

The release of any material by the engineer shall not preclude subsequent rejection if the material is damaged in transit or later damaged or found to be defective.

506.9 HANDLING:

Extreme care shall be exercised in handling, storing, moving and erecting precast prestressed concrete members to avoid twisting, racking or other distortion that would result in cracking or damage to the members. Precast prestressed members shall be handled, transported and erected in an upright position and the points of support and directions of the reactions with respect to the members shall be approximately the same during transportation and storage as when the member is in its final position.

Precast prestressed concrete members shall be placed in the structure in the conformity with the plans and special provisions for the structure to be constructed.

Precast prestressed concrete piling shall be placed in accordance with the provisions for concrete piling.

506.10 PAYMENT:

Precast prestressed concrete members, except piling, will be paid for at the contract price or prices for furnishing and erecting precast prestressed concrete members of the various types and lengths set forth in the proposal.

The contract price paid for furnishing the member shall include full compensation for furnishing all labor, materials, tools, equipment, and incidentals, and for doing all work involved in constructing and furnishing the member at the site of the work complete in place as shown on the plans, and as specified.

Partial payment will be allowed for members which are in the stockpile at the manufacturer's plant.

End of Section

SECTION 510

CONCRETE BLOCK MASONRY

510.1 DESCRIPTION:

All materials for concrete block masonry shall conform to the requirements of Sections 775 and 776.

510.2 CONSTRUCTION:

Proper masonry units shall be used to provide for all windows, doors, bond beams, lintels, pilasters, etc. with a minimum of unit cutting. Where masonry unit cutting is necessary, all cuts shall be neat and regular and edges exposed in the finished work shall be cut with a power driven abrasive saw.

Where no bond pattern is shown, the wall shall be laid up in straight uniform course with regular running bond with alternate header joints in vertical alignment.

Intersecting masonry walls and partitions shall be bonded by staggering the joints to form a masonry bond and the use of ¼ inch minimum diameter ties at 24 inch o.c. maximum.

Where stack bond is indicated on the plans, approved metal ties shall be provided horizontally at 24 inches o.c. maximum.

Where masonry facing is a part of wall construction metal, ties shall be furnished and installed as directed by the Engineer.

Mortar joints shall be straight, clean and uniform in thickness. Unless otherwise specified or detailed on the plans, horizontal and vertical joints shall be approximately ⅜ inch thick with full mortar coverage on the face shells; shall have vertical joints buttered well for a thickness equal to the face shell of the block and these joints shall be shoved tightly, so that the mortar bonds to both blocks. No slushing or grouting of a joint will be permitted, nor shall a joint be made by working in mortar after the units have been laid.

Exposed walls shall have joints tooled with a round bar or V-shaped bar to produce a dense, slightly concave surface well bonded to the block at the edges. Tooling shall be done when the mortar is partially set but still sufficiently plastic to bond. All tooling shall be done with a tool which compacts the mortar, pressing the excess mortar out of the joint rather than dragging it out.

If it is necessary to move a block so as to open a joint the block shall be removed from the wall, cleaned and set in fresh mortar.

510.3 PLACING REINFORCING STEEL:

Reinforcing steel shall be placed as indicated on the plans. Splices shall be lapped a minimum of 40 diameters, except that dowels other than column dowels need to be lapped only 30 diameters. Column dowels shall lap 50 diameters.

Outside horizontal steel shall lap around corners 40 diameters, and be carried through columns unless otherwise shown on the plans. Inside horizontal steel shall extend as far as possible and bend into corner core. A dowel shall be provided in the foundation for each vertical bar. Bending of dowels to fit openings will not be permitted and, where required, new dowels shall be installed by drilling and grouting. All lap joints shall be wired.

Vertical cores containing steel shall be filled solid with grout, and thoroughly rodded.

Where knockout blocks are used, steel shall be erected and wired in place before 3 courses have been laid. Vertical cores at steel locations shall be filled as construction progresses.

Where knockout blocks are not used, vertical cores at steel locations shall be filled in lifts of not more than 4 feet. The maximum height of pour shall be 8 feet. Cores shall be cleaned of debris and mortar and shall have reinforcing steel held straight in place. If ordered by the Engineer, inspection and cleanout holes shall be provided at the bottom of each core to be filled.

Reinforcing steel shall be inspected prior to placing grout.

510.4 CURING:

Newly constructed masonry shall be kept damp for at least 5 days with a nozzle regulated fog spray sufficient only to moisten faces of the masonry but not of such quantity as to cause water to flow down over the masonry.

510.5 MORTAR AND GROUT:

Mortar and grout used for concrete block masonry shall conform to Section 776.

510.6 PAYMENT:

Payment for concrete block masonry will be included in the lump sum price for the structure of which the masonry is a part, unless another basis for payment is included in the proposal.

End of Section

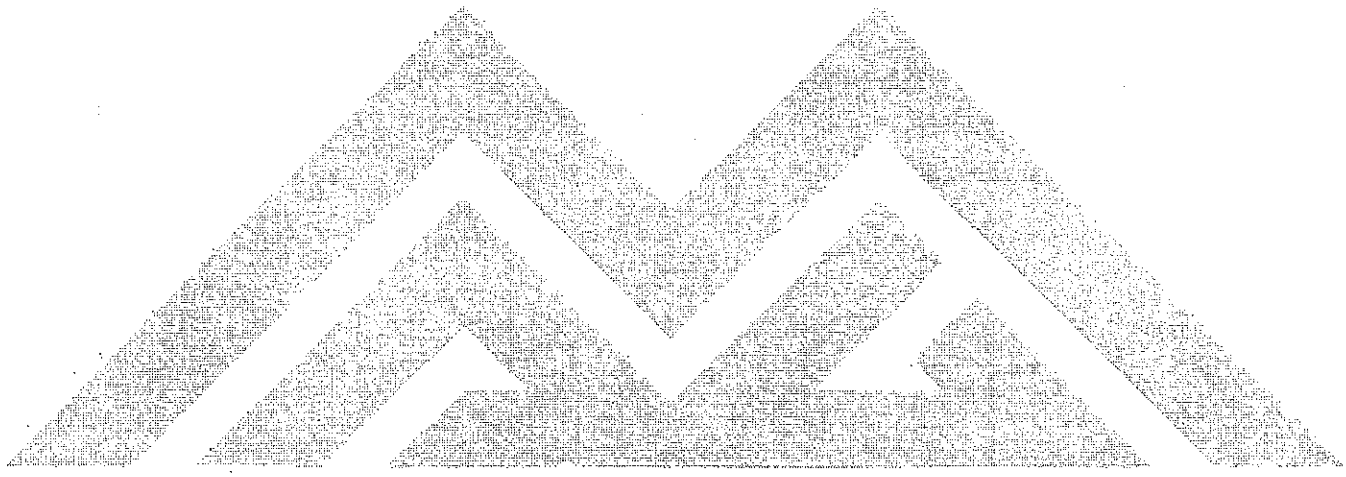

SECTION 511

BRICK MASONRY

511.1 MATERIALS:

Unless otherwise specified, brick masonry shall be constructed of brick conforming to Section 775 and cement mortar as described in Section 776.

511.2 BRICKLAYING:

The amount of wetting will depend on the rate of absorption of the brick at the time of laying. When being laid, the brick shall have suction sufficient to hold the mortar and to delete the excess water from grout, and shall be sufficiently damp so that the mortar will remain plastic enough to permit the brick to be leveled and plumbed after being laid without breaking the mortar bond.

Brick work shall be plumb, level, straight and true to dimensions shown on the plans. Such work shall start, where feasible, at a least important corner of wall and the masonry contractor shall request an early inspection of the work by the Engineer. All pattern work, bonds or special details indicated on the plans shall be accurately and uniformly executed. Face bonding shall be as shown on the plans, but if not shown, shall be running bond for standard size brick and approximately ⅓ bond for oversize brick and approximately ¼ bond for modular brick unless otherwise designated by the Engineer. All bed and head joints shall be solidly filled with mortar at the time of laying.

Unless otherwise shown or detailed on the plans the thickness of mortar joints shall be uniformly ½ inch.

Face bricks shown to be laid in stack bond shall have the center lines of vertical joints plumb and the brick laid equidistant from the center line with not more than ⅛ inch variation in the width of these joints. The brick in each separate stack shall not vary more than ⅛ inch in length, but the separate stacks may vary in width of stacks.

When mortar has slightly stiffened, solidly fill with mortar all interstices between bricks and between bricks and other materials and also fill all line pin holes. Jointing and tooling shall be done before mortar has stiffened.

Masonry to be plastered shall have all mortar joints trowel cut flush.

Masonry to be painted and not shown to be tooled or raked, shall have all joints carefully and evenly struck with a trowel.

Masonry to be left exposed without paint or plaster, shall have all mortar joints carefully and evenly tooled with a metal jointing tool of a type as approved by the Engineer. Masonry shown or indicated to have raked joints shall have the joints raked out ⅜ inch deep, then tooled with a flat jointing tool, then brushed with a stiff non-metallic brush. Sack-rubbing or wiping finished masonry with rags will not be permitted.

511.3 PROTECTION:

Protect all sills, ledges, offsets, other materials, etc., from droppings of mortar during construction. Protect the tops of all unfinished masonry from rain by using water-repellant covering such as roofing felt or tar paper.

Protect the surfaces of wall, piers, etc., from mortar droppings, or splashes at scaffold heights.

511.4 CURING:

Finished masonry shall not be wetted, except when exposed to extreme hot weather or hot wind, and then only by using a nozzle regulated fog spray sufficient only to dampen the face but not of such quantity to cause water to flow down over the masonry.

511.5 REINFORCED GROUTED BRICK MASONRY:

Mortar in all bed joints shall be held back ¼ inch from edges of brick adjacent to grout space, or shall be beveled back and upward from grout space. The thickness of head and bed joints shall be as hereinbefore specified or shown. Head joints specified or shown to be less than ⅝ inch thick shall be solidly filled with mortar as brick are laid. Head joints ⅝ inch or more in thickness may have mortar sufficient only to form dams to retain the grout. Bed joints shall not be deeply furrowed with the trowel. All brick shall be shoved at least ½ inch into place. One outer tier shall be not more than 12 inches before grouting, but the other tier shall be not more than 4 inches high before placing the grout. Grout shall be thoroughly agitated and mixed to eliminate segregation before being placed. All interior grout spaces shall be filled with grout and immediately puddled or swished with a stick or rod (not a trowel) sufficiently to cause the grout to flow into all interstices between the bricks and to fully encase the reinforcing steel. Wherever possible, grouting shall be done from the inside face of exterior masonry. If any grout contacts the finished masonry, it shall be immediately removed, and the surface cleaned.

In masonry which is more then 2 tiers in thickness, including pilasters and columns, the interior shall be of whole or half bricks placed into grout with not less than ¾ inch of grout surrounding each brick or half brick. Except at the finish course, all grout shall be stopped 1½ inches below the top of both outer tiers. Where necessary to stop off a longitudinal run of masonry, it shall be done only by racking back ½ brick length in each course and stopping grout 2 inches back of the rack. Toothing will not be permitted unless special approval is given by the Engineer.

Reinforcing steel shall be accurately placed in strict accordance with the plans and notes thereon. Vertical steel shall be held firmly in proper position. Where necessary this shall be done by means of frames or other suitable devices. Horizontal steel may be placed as the work progresses.

511.6 PAYMENT:

Payment for brick masonry will be included in the lump sum price for the structure of which the masonry is a part unless another basis for payment is included in the proposal.

End of Section

SECTION 515

STEEL STRUCTURES

515.1 DESCRIPTION:

515.1.1 Shop Drawings: The Contractor shall prepare and submit to the Engineer for approval, complete shop drawings which shall show details, dimensions, sizes of materials, and all information and data necessary for the metal work, including full details of the match markings. Any materials fabricated by the Contractor prior to the approval of the drawings will be at his risk. The Contractor shall be responsible for the correctness of the drawings and for shop fits and field corrections, even though the drawings may have been approved by the Engineer.

515.1.2 False work: The Contractor shall be fully responsible for designing and providing false work capable of supporting all loads which are applied.

515.1.3 As Built Plans: When required by the special provisions, the Contractor shall furnish to the Engineer before formal acceptance of the work detailed plans of the structure as built. Inasmuch as the plans will be retained by the Contracting Agency as permanent records, they must be in the form of printable transparencies of quality satisfactory to the Engineer.

515.1.4 Methods aud Equipment: When requested by the Engineer, before starting erection of any structural members, the Contractor shall inform the Engineer fully as to the methods he proposes to follow and the amount and character of equipment he proposes to use. The use of such methods and equipment shall be subject to the approval of the Engineer. Approval by the Engineer shall not be considered as relieving the Contractor of the responsibility for the safety of his methods or equipment or for carrying out the work in full accordance with the plans and specifications.

An inspector or other authorized representative of the Engineer may examine the metals and metal items to be fabricated before they are worked in the shop and may exercise constant surveillance over the work during its progress, with full power to reject materials or workmanship not conforming to the plans and specifications.

The Contractor shall give the Engineer sufficient advance notice to permit ample time for the inspection of materials before commencement of the fabricating operations.

The Engineer shall be furnished complete copies in triplicate of all mill reports. The Contractor shall furnish ample means and assistance for sampling all materials. Arrangements shall be made for the Engineer to have free access at all times to any portion of the shops where work is being done.

No fabricating, machining, cutting, welding, assembling, or painting shall be done except with the knowledge of the Engineer. Any work done otherwise will be subject to rejection.

The acceptance of any material or finished member by the Engineer shall not be a bar to subsequent rejection if it is later found to be defective. Rejected material and workmanship shall be promptly replaced.

Samples of materials, except castings, shall be cut from stock designated by the Engineer or will be selected from items furnished. Gray iron, steel, and bronze castings shall be cast with test coupons.

515.2 STEEL BUILDING AND MISCELLANEOUS STEEL STRUCTURES:

Details of design, fabrication and erection of such buildings and structures shall conform to the specifications for the design, fabrication and erection of structural steel for buildings of the AISC except as modified by the special provisions for any conflicts with the applicable building code which may exist.

The design, fabrication and erection of structural steel and all similar work incidental or appurtenant to steel construction for highway bridges shall be performed in accordance with the latest standard specifications for highway bridges adopted by AASHTO. The plans or special provisions will designate the members to be galvanized.

515.2.1 Miscellaneous Metal Fabrication: The provisions of this subsection shall apply to items not intended primarily for structural purposes and which are fabricated from metals.

If straightening of any materials is necessary, the straightening shall be done by methods which will restore the material to its original shape or surface without residual blemish. Sharp kinks or bends will be considered a cause for rejection of the materials.

The finish of miscellaneous metal items shall not be less in quality and workmanship than that standard considered to be the commercial standard for the kind of member being furnished. Punched and drilled holes shall be burred and, unless otherwise specified, sheared and machined edges shall be finished by grinding to an appropriate radius. Riser, sprue, or vent marks on castings shall be ground flush with the adjacent surface. Blow holes in castings shall not be repaired by any method except as authorized in advance by the Engineer. Exposed edges of sheet metal shall be dressed with a stone or file to remove the sharp edges or corners. Drilled or punched holes which are improperly located or misaligned shall be cause for rejection and may not be corrected without the prior approval of the Engineer. All parts of assemblies shall be fabricated so that they may be assembled without forcing or drifting.

Welders proposed to be used on miscellaneous metal fabrication will be subject to qualifications.

515.3 WORKMANSHIP:

Workmanship and finish shall be equal to the best general practice in modern bridge shops.

Rolled material before being laid off or worked shall be straight. If straightening is necessary, it shall be done by methods approved by the Engineer. Kinks and bends may be cause for rejection of the material.

If straightening is necessary in the field only methods approved by the Engineer shall be used.

Following the straightening of a bend or buckle, the surface of the metal shall be carefully inspected for evidence of fracture.

Portions of the work exposed to view shall be finished neatly. Shearing, flame cutting and chipping shall be done carefully and accurately. Undercut gusset plates will not be accepted. All sharp corners and edges, and edges that are marred, cut or roughened in handling or erection, shall be slightly rounded by grinding or other suitable means.

515.4 COMPUTED WEIGHT:

The computed weight shall be obtained by the use of the following rules and assumptions:

(A) The weight of structural and cast steel shall be assumed at 0.2833 pound per cubic inch. The weight of cast iron shall be assumed at 0.2604 pound per cubic inch. The weight of wrought iron shall be assumed at 0.2776 pound per cubic inch.

(B) The weights of rolled shapes and of structural plates, shall be computed on the basis of their nominal weights and dimensions, as shown on the shop drawings, deducting for copes, cuts, and open holes, exclusive of rivet or bolt holes.

(C) Rivets, bolts, and welds shall be considered as incidentals and their price shall be included in the price of steel shapes and plates.

(D) The weight of castings and fillets shall be computed from the dimensions shown on the shop drawings, deducting for all openings or cuts in the finished casting.

(E) The weight of pins and rollers shall be computed from the dimensions shown on the shop drawings, deducting for all holes, openings, pockets, and metal removed by machine finishing.

Pilot nuts and driving nuts for each size of pin shall be furnished for erection work and the weights of such nuts will not be included in the weight of structural steel to be paid for.

(F) If computed weights are used to determine the pay quantities of galvanized metal, the weight to be added to the calculated weight of base metal for the galvanizing shall be determined from the table of weights of zinc coatings specified by the ASTM A-153.

515.5 PAINTING:

With the exception of items which are to be galvanized, structural steel members and miscellaneous metal items shall have a shop prime coat of approved rust-inhibitive paint. Application shall be as specified in Section 530. The thickness of the prime coat shall be not less than one mill.

After erection of structural steel uncoated surfaces at connections, surfaces where the shop coat has been abraded or otherwise damaged shall be touched up. Match marks and identification marks shall be properly cleaned off and painted over. The paint shall be identical to that used for the shop prime coat.

515.6 MEASUREMENT:

Steel structures will be paid for at a lump sum price or at a price per pound for structural steel, and at prices per pound for cast steel and cast iron. The pay quantities will be determined by computed weights or, by scale weights obtained as provided in this specification. Only material actually used in the completed structure will be paid for.

The pay quantities will be determined by computed weights for rolled sections and scaled weights for castings except as otherwise specified.

Computed weights will be used to determine pay quantities of alloy and carbon steel when members contain both alloy and carbon steel.

The weight of erection bolts, paint, boxes, crates, and other containers used for packing and the materials used for supporting members during transportation will not be included in the weights of material to be paid for.

The weight of structural steel to be paid for will not exceed the computed weight by more than 1½ percent. The weight of cast steel or cast iron to be paid for will not exceed the computed weights by more than 7½ percent. If the scale weight of any member is less than 99½ percent of the computed weight of that member, the member will be rejected and will not be paid for.

If computed weights are used, the weight to be paid for will be the calculated weight as established by the Engineer and no allowance will be made for weight in excess thereof.

515.7 PAYMENT:

Unless otherwise provided in the proposal, the basis of payment for steel structures shall be as follows:

The price paid per pound for structural steel including full compensation for furnishing all labor, materials, tools, equipment and incidentals, and for doing all the work involved in furnishing, fabricating, delivering, erecting and prime coating the steel work, complete in place, as shown on the plans, and as specified in these specifications and the special provisions, and as directed by the Engineer.

The prices paid per pound for cast steel, cast bronze and cast iron shall include full compensation for furnishing all labor, materials, tools, equipment, and incidentals, and for doing all the work involved in furnishing and placing the materials, complete in place, as shown on the plans, and as specified in these specifications and the special provisions, and as directed by the Engineer.

Full compensation for furnishing and placing sheet packing, performed fabric pads, elastomeric or elastic bearing pads, and red lead paste, and for grouting masonry or bearing plates as shown on the plans shall be considered as included in the price paid for structural steel and no separate payment will be made therefore. Where the specifications or plans require metal to be galvanized, the price paid per pound for the metal, including the weight of zinc coating, shall be considered as full compensation for furnishing all labor, materials, tools, equipment, and incidentals, and for doing all the work involved in furnishing the galvanized metal complete in place, as shown on the plans, and as specified in the specifications and the special provisions, and as directed by the Engineer.

End of Section

SECTION 520

STEEL AND ALUMINUM HANDRAILS

520.1 DESCRIPTION:

Metal handrail shall consist of furnishing all materials and constructing handrail of steel or aluminnm, including railing, posts, fittings and anchorages. Metal handrail shall be fabricated, installed and painted, when required, in accordance with the details shown on the plans and these specifications.

520.2 FABRICATION:

Prior to beginning any work on the fabrication of the railing, the Contractor shall submit shop drawings for approval, showing complete railing details.

Materials furnished for metal handrail shall conform to the requirements specified on the plans.

The Engineer shall be furnished complete, copies in triplicate of all mill reports on steel and aluminum materials furnished.

Railings shall be fabricated from welded or seamless members of the size and thickness shown on the plans. Steel members shall conform to the requirements of ASTM A-53. Grade B structural steel conforming to ASTM A-36, or tubular sections of hot rolled mild steel, as shown.

Welding shall be performed by the electric arc process and shall be done in conformance with Specifications for Welded Highway and Railway Bridges of the AWS. All butt welds on exposed surfaces shall be ground flush with adjacent surfaces.

Railing panels shall be straight and true to dimensions.

For structures on curves, either horizontal or vertical, the railing shall conform closely to the curvature of the structure.

The completed steel railing units shall be galvanized in accordance with the requirements of Section 771 unless otherwise specified.

520.3 ERECTION:

The railing shall be carefully erected, true to line and grade. Posts and balusters shall be vertical and parallel with the deviation from the vertical for the full height of the panel not exceeding 5/8 inch. After erecting the railing, any abrasions or exposed steel shall be repaired in accordance with Section 771 or Section 530.

520.4 MEASUREMENT:

The various types of railing will be measured by the linear foot from end to end along the face of the railing including terminal sections.

520.5 PAYMENT:

The price paid per linear foot for handrailing shall include full compensation for furnishing all labor, materials, tools, and equipment and doing all work involved in constructing the railing complete in place as shown on the plans and specified herein.

End of Section

SECTION 525

PNEUMATICALLY PLACED MORTAR

525.1 DESCRIPTION:

The work under this section shall consist of furnishing all material and pneumatically placing, by means of suitable equipment and competent operators, either premixed portland cement and fine aggregate (dry mix process) or premixed concrete (wet mix process).

525.2 DRY MIX PROCESS:

The dry mix process shall consist of thoroughly mixing a proportional combination of fine aggregate and portland cement and conveying this mixture through a delivery hose to a special nozzle where water is added and combined with the dry ingredients prior to discharge. The nozzle water ring shall be cleaned daily.

The fine aggregate shall be material sand, conforming to ASTM C-33, with Gradation No. 1 as shown in Table 525-1 and with not less than 3 percent or more than 7 percent moisture by weight.

Portland cement and mixing water shall conform to the requirements of Section 725.

The dry mix shall consist of 1 part portland cement and 4.5 parts of fine aggregate by weight. Machine mixing will be required. This operation of proportioning and mixing shall be subject to the approval of the Engineer.

525.3 WET PROCESS:

The wet process shall consist of premixing by mechanical methods a proportional combination of portland cement, aggregate and water required to produce mortar or concrete and conveying this mortar or concrete through the delivery hose to the special nozzle where additional compressed air is added prior to discharge. The air ports in the nozzle shall be cleaned daily.

The portland cement concrete used for the Wet Mix Process shall conform to Section 725 and shall be Class A (3000 psi) unless otherwise specified. In no event shall a slump greater than 4 inches be used. As the work approaches the vertical, the maximum slump shall not exceed 1 inch.

The fine and coarse aggregate shall conform to ASTM C-33 using one of the three graduations shown in Table 525-1. Unless otherwise specified, Gradation No. 1 will be used.

TABLE 525-1

PNEUMATICALLY PLACED MORTAR GRADATION (A.C.I. TABLE 2.2.1)

Sieve size	Percent by weight passing individual sieves		
	Gradation No. 1	Gradation No. 2	Gradation No. 3*
¾ in.	—	—	100
½ in.	—	100	80-95
⅜ in.	100	90-100	70-90
No. 4	95-100	70-85	50-70
No. 8	80-100	50-70	35-55
No. 16	50-85	35-55	20-40
No. 30	25-60	20-35	10-30
No. 50	10-30	8-20	5-17
No. 100	2-10	2-10	2-10

*Batch fine and coarse aggregates separately to avoid segregation.

525.4 REINFORCING STEEL:

Reinforcing steel bars or welded-wire fabric shall conform to Section 727 and shall be 6 x 6 - W 1.4 x 1.4 welded wire fabric unless otherwise specified. Reinforcement shall be placed as closely as possible to the center of the mortar.

525.5 EQUIPMENT:

Prior to the start of construction, the Contractor shall demonstrate that his equipment, materials and operators are capable of providing a finished structure in accordance with the specifications. For this demonstration, the Contractor shall provide test panels, 30 inches by 30 inches, with a depth the same as the structure, but not less than 4 inches. A separate panel shall be provided for each shooting position to be used (overhead, slope and/or slab) and one half of each panel shall contain reinforcement as used in the structure. Cores will be taken for visual inspection and compressive strength tests. The Engineer has the authority to accept or reject equipment, materials and/or operators based on his evaluation and his decision will be final.

If the Contractor can present valid, factual documentation to the satisfaction of the Engineer that his equipment, materials and operators have produced satisfactory results on similar work within the past six months, the Engineer may eliminate the test panel procedure.

525.6 SURFACE PREPARATION:

The surface on which the mortar is to be placed shall be compacted and true to line and grade as required by the plans and specifications. The surface shall be uniformly moistened so that water will not be drawn from the freshly-placed mortar. Placement of the mix shall not start until the temperature is 35°F and rising and shall stop when the temperature is 40°F and falling.

525.7 FORMS AND GROUND WIRES:

Forms shall be plywood or some other suitable material, true to line and grade, sufficiently rigid to resist deflection during mortar placement.

Ground or gauging wires shall be installed where necessary to establish the thickness and finish lines of the structure.

525.8 JOINTS:

Construction joints shall be tapered to a shallow edge from not more than one inch thick over a width of approximately one foot except where the joint will be subjected to compressive stress. In this case, square joints shall be constructed. Joints shall be thoroughly cleaned and wetted prior to any additional application.

Install control joints in accordance with the plans. Reinforcement will not extend across control joints.

525.9 FINISHING:

Unless otherwise specified, the natural gun finish will be provided.

525.10 CURING:

Curing shall be accomplished using Type 2 compound as specified in Section 726. Application rate shall be not less than one tenth of a gallon per square yard. Subsection 505.6.2 Adverse Weather Concreting is applicable.

525.11 TESTING:

Tests to determine the quality of the mortar will be performed by the Engineer periodically during the course of work. Test panels shall be prepared by the Contractor.

Test panels shall be at least 12 inches square and as deep as the structure, but not less than 4 inches. Cores shall be taken from the panel for visual and compressive strength tests. The minimum compressive strength at the end of 28 days shall be 3000 psi.

The Engineer may allow the use of 6 inch by 12 inch hardware cloth cylinders for testing in lieu of the test panels. These cylinders will be furnished by the Contractor.

All rebound pockets and any mortar, defective in the compressive strength test, shall be cut out and replaced.

525.12 PAYMENT:

Payment for pneumatically-placed mortar will be made at the unit price per square yard or the lump sum as set forth in the proposal. Such payment shall be full compensation for furnishing all labor, tools, equipment and accomplishing all work in conformity with the plans and specifications.

End of Section

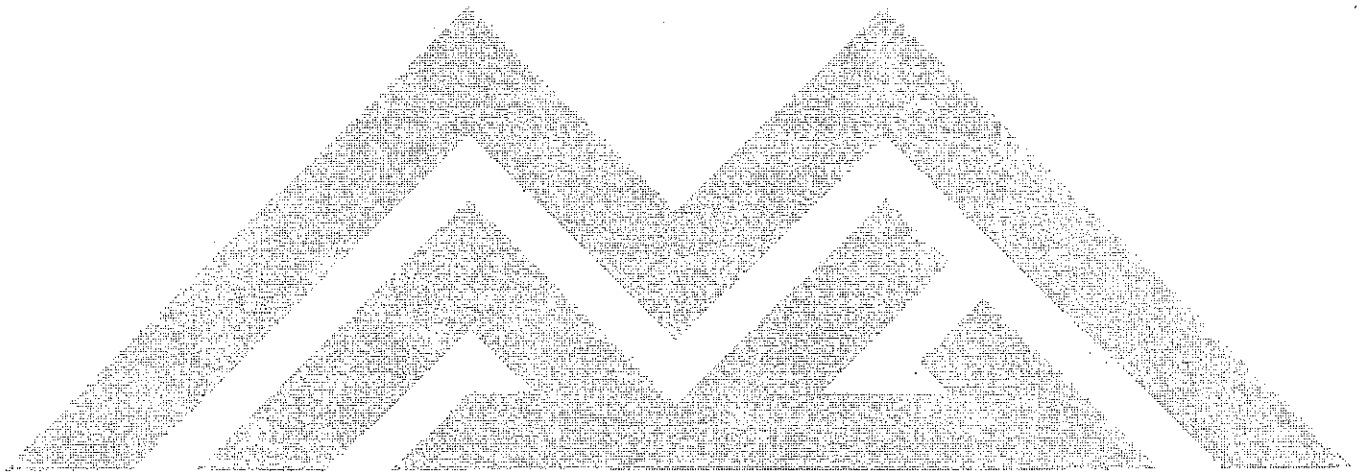

SECTION 530

PAINTING

530.1 DESCRIPTION:

This work shall consist of furnishing paint and other necessary materials and painting metal, wood or other surfaces in accordance with the details shown on the plans and these specifications.

530.2 MATERIALS:

Materials used in paint for painting shall conform to the requirements of Section 790.

530.3 WEATHER CONDITIONS:

Paint shall be applied only on thoroughly dry surfaces and during periods of favorable weather. Except as provided below, painting will not be permitted when weather conditions during application are such that the atmospheric temperature will drop below 35°F. during the drying period. If fresh paint is damaged by the elements, it shall be replaced by the Contractor at no additional cost to the Contracting Agency.

Subject to the approval of the Engineer, the Contractor may provide suitable enclosures to permit painting during inclement weather. Provisions must be made to control atmospheric conditions artificially inside the enclosures within limits suitable for painting throughout the painting operation. The cost of providing and maintaining such enclosures shall be considered as included in the prices paid for the various contract items of work and no additional payment will be made therefore.

530.4 APPLICATION:

Painting shall be done in a neat and workmanlike manner. Unless otherwise specified paint shall be applied either by brush, roller, or spray methods.

If brushes are used, they shall have sufficient body and length of bristle to spread the paint in a uniform coat. In general, the primary movement of the brush shall be such as to fill thoroughly all irregularities in the surface, after which the coating shall be smoothed by a series of parallel strokes. Paint shall be evenly spread and thoroughly brushed out. If a considerable amount of brush marks appear, it will be considered that the paint has been improperly applied. If rollers are used, they shall be of a type that do not leave a stippled texture in the paint file.

On all surfaces which are inaccessible for brushing, the paint shall be applied by spray or by sheepskin daubers especially constructed for the purpose, or by other means approved by the Engineer.

If spray methods are used, the operator shall be thoroughly experienced. Runs, sags, thin areas in the paint coat, or skips and holidays shall be considered as evidence the work is unsatisfactory and the Contractor may be required to apply the remainder of the paint by brush.

A water trap acceptable to the Engineer shall be furnished and installed on all equipment used in spray painting.

Mechanical mixers shall be used to mix the paint. The paint shall be mixed a sufficient length of time, prior to use, to thoroughly mix the pigment and vehicle together. Paint shall be kept thoroughly mixed while being applied.

530.5 THINNING PAINT:

Paints specified are formulated ready for application and no thinning will be allowed. If the paint becomes thick in cool weather, it shall be heated in the container immersed in hot water.

530.6 PROTECTION OF WORK:

The Contractor shall protect all parts of the structure against disfigurement by spatters, splashes, and smirches of paint or of paint materials. The Contractor shall be responsible for any damage caused by his operations to vehicles, persons, or property, and shall provide protective means to guard against such damage at his expense.

Paint stains which might result in an unsightly appearance shall be removed or obliterated by the Contractor.

When ordered by the Engineer, if traffic causes an objectionable amount of dust, the Contractor shall sprinkle the adjacent roadbed and shoulders with water for a distance on each side of the location where painting is being done sufficient to abate the dust nuisance. The Contractor shall furnish and post at his own expense DRIVE SLOWLY signs and take other necessary precautions to prevent dust and dirt from accumulating on freshly painting surfaces.

530.7 SAFETY PRECAUTIONS:

The following safety precautions shall be observed in addition to those prescribed by law in Section 107.

The applicable sections of NACE, A Manual for Painter Safety.

530.8 SURFACE PREPARATION FOR PAINTING:

530.8.1 Steel: Surface preparation for painting steel shall conform to the surface preparation specifications of the Steel Structures Painting Council.

Unless otherwise specified the commercial blast method shall be used.

530.8.2 Galvanized Surfaces:

(A) Hand Cleaning: Concrete spatter, heavy grease, and other foreign matter shall be removed from galvanized surfaces by hand scraping or wire brushing.

(B) Solvent Cleaning: After hand cleaning, all galvanized surfaces shall be cleaned by the solvent cleaning procedures prescribed under steel above to remove oil, grease and other detrimental foreign matter.

(C) Pretreatment: After hand and solvent cleaning, the cleaned areas shall then be painted by brushing on at least 1 full coat of paint No. 1. Unless otherwise directed by the Engineer, the second coat shall be applied within 24 hours after the primer is applied.

530.8.3 Wood Surface: Wood surfaces shall be prepared for painting by removing all cracked or peeled paint, loose chalky paint, dirt, and other foreign matter by wire brushing, scraping, sanding, or other approved means immediately prior to painting. All surfaces shall be wiped or dry brushed to remove any dust or chalky residue that may result from cleaning operations. All wood designated to be painted shall be thoroughly dry before paint is applied.

530.9 PAINTING:

530.9.1 Structural Steel:

(A) Paint: Unless otherwise required on the plans or in the special provisions, the paints to be applied to structural steel surfaces shall consist of a shop prime coat, as specified in Section 515, a second coat, and a finish coat. The total dry film thickness of the prime and second coat shall be not less than 3 mills. The dry thickness of the paint will be measured in place with a calibrated magnetic film thickness gauge.

Excessively thick coats of paint will not be permitted. The thickness of each coat shall be limited to that which will result in uniform drying throughout the paint film.
Unless specified otherwise on the plans or in the special provisions, the paint coats shall be as specified for general use on structural steel in Section 790. Succeeding coats of paint, not otherwise materially different in color, shall have carbon black mixed into the paint in accordance with Section 790 to produce a perceptible color difference between the paint coat being applied and the preceding coat.

(B) Cleaning: After erection and riveting or welding, all surfaces of structural steel which will be exposed to air in the completed structure and the repainting of existing steel structures where partial cleaning is required, the method of cleaning will be as directed by the Engineer or as specified in the special provisions.

Any damage to sound paint on areas not designated for treatment, resulting from the Contractor's operations, shall be repaired as directed by the Engineer.

(C) Application of Paint: Painting of structural steel, except for shop applied prime coats and sections which will be inaccessible after erection as described below, shall be done after erection unless otherwise specified in the special provisions. Requests to do any additional painting prior to erection shall be submitted by the Contractor and approved by the Engineer in writing before such work is started. Painting prior to erection will be limited to a prime coat of paint, except that surfaces exposed to the atmosphere which would be inaccessible for painting after erection shall be painted the full number of coats prior to erection. Any deficiencies in the prime coat of paint, or any second coat shall be corrected to the satisfaction of the Engineer prior to the application of the finish coat of paint.

The surface of the paint coat being covered shall be free from moisture, dust, grease, or any other deleterious material which would prevent the bond of the succeeding coat. In spot painting, any old paint which lifts after application of the touch-up coat, shall be removed by scraping and the area repainted before application of the next coat.

The finish coat shall not be applied until the required total film thickness of the undercoats of paint, as described above is obtained.

Open seams at contact surfaces of built-up members which would retain moisture shall be caulked with red lead paste before applying the second coat of paint.

Except for anchor bolt assemblies, steel embedded in concrete need not be painted. Anchor bolt assemblies shall be painted or dipped with 1 coat of paint prior to installation.

With the exception of abutting chord and column splices and column and truss shoe bases, machine finished surfaces shall be coated with a rust inhibitor which can be easily removed. Surfaces of iron and steel castings which have been machine finished shall be painted with a coat of shop paint.

530.9.2 Machinery: Prior to installation, all surfaces of machinery exposed to the atmosphere which are subject to corrosion and are normally painted, shall be painted with 2 coats of paint. Unless otherwise specified, after installation of the machinery, such surfaces shall be painted with a finish coat. All coats shall be as specified for structural steel.

530.9.3 Galvanized Surfaces: Unless otherwise provided on the plans or in the special provisions, galvanized surfaces shall be left unpainted. Areas of galvanized coating damaged due to welding after fabrication or handling shall be prepared as specified above and then painted with 1 full coat of paint No. 15.

530.9.4 Metal Guard Rails: Metal guard rails when required to be painted shall be painted with 2 coats of paint No. 11.

530.9.5 Wood Surfaces:

(A) Paint: The surface shall be prepared as specified above and painted with paint No. 6 or 7. The number of coats of paint will be specified in the special provisions.

(B) Application of Paint: When permitted in writing by the Engineer, the prime coat of paint may be applied prior to erection. After the prime coat has dried and the timber is in place, all cracks, checks, nail holes, etc., shall be puttied flush with the surface and allowed to dry before the second coat is applied.

Skips, holidays, and thin areas or other deficiencies in any 1 coat of paint shall be corrected to the satisfaction of the Engineer before the succeeding coat is applied.

The surface of the paint coat being covered shall be free of any deleterious material before any additional paint is applied.

530.10 TESTING:

Paint and paint materials shall be sampled and tested prior to use. Tests shall be conducted in accordance with methods specified by ASTM or by methods set forth in Federal Standard 141. In the absence of any such methods, other suitable methods may be designed and utilized by the Engineer. Lots or batches of paint of proprietary brand, as defined in Section 790, which have been previously sampled and tested by the Contracting Agency, and approved, may be used without further testing, if permitted by the Engineer.

530.11 PAYMENT:

Payment for the preparation of surfaces, shop prime coat and field touch-up coats on structural steel and miscellaneous metal items shall be considered as included in the prices for the structural steel and miscellaneous metal items. Payment for second and finish coats on structural steel or miscellaneous metal items shall be considered as included in payments for the structures, except that payment for cleaning all painting on miscellaneous metal items shall be considered as included in the price for the item when a separate price therefor is included in the proposal.

Full compensation for preparing surfaces and for painting machinery, galvanized metal, guard rails and wood shall be considered as included in the various prices paid for the contract items or work and no separate payment for such work will be made.

End of Section

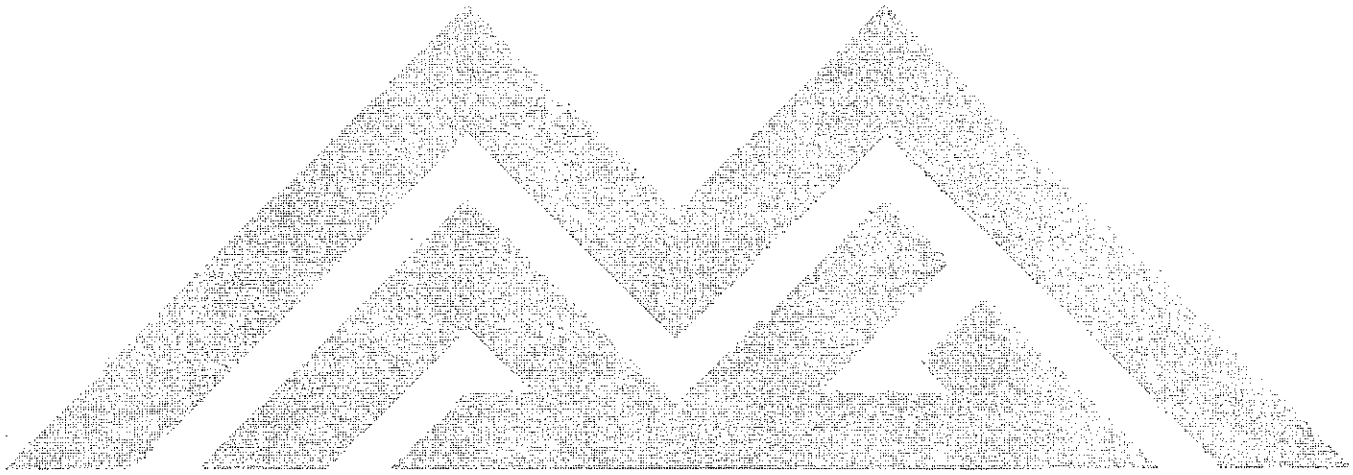

PART 600

WATER AND SEWER

Section	Title	
601	Trench Excavation, Backfilling and Compaction	601-1
602	Encasement of Water or Sewer Pipe by Jacking or Tunneling Operation	602-1
603	Installation for High Density Polyethylene Pipe	603-1
604	Placement of Controlled Low Strength Material	604-1
605	Subdrainage	605-1
610	Water Line Construction	610-1
611	Disinfecting Water Mains	611-1
615	Sewer Line Construction	615-1
616	Reclaimed Water Line Construction	616-1
618	Storm Drain Construction	618-1
620	Cast-In-Place Concrete Pipe	620-1
621	Corrugated Metal Pipe and Arches	621-1
625	Manhole Construction and Drop Sewer Connections	625-1
630	Tapping Sleeves, Valves and Valve Boxes on Water Lines	630-1
631	Water Taps and Meter Service Connections	631-1

SECTION 601

TRENCH EXCAVATION, BACKFILLING AND COMPACTION

601.1 DESCRIPTION:

The work covered by this specification consists of furnishing all plant, labor, equipment, appliances and materials, and performing all operations in connection with the excavation and backfilling of trenches in accordance with the plans and special provisions, except for the installation of high density polyethylene pipe (HDPE). See Section 603 for trench excavation, backfilling, and compaction of HDPE pipe.

Excavation for appurtenance structures, such as manholes, inlets, transition structures, junction structures, vaults, valve boxes, catch basins, etc., shall be deemed to be in the category of trench excavation.

601.2 EXCAVATION:

601.2.1 General: The Contractor shall perform all excavation of every description and of whatever substances encountered, to the depths indicated on the plans, and including excavation ordered by the Engineer of compacted backfill for the purpose of making density tests on any portion of the backfill.

All excavation shall be open cut unless otherwise shown on the plans or approved by the Engineer.

601.2.2 Trench Widths: Trenches for other than cast-in-place concrete pipe shall conform to the dimensions in Table 601-1, unless otherwise specified in the special provisions, indicated on the plans, and/or approved by the Engineer.

TABLE 601-1

TRENCH WIDTHS

Size Of Pipe (I.D.)	Maximum Width At Top Of Pipe Greater Than O.D. Of Barrel	Minimum Width At Springline Each Side of Pipe
Less than 18″	16″	6″
18″ to 24″ inclusive	19″	7½″
27″ to 39″ inclusive	22″	9″
42″ to 60″ inclusive	½ O.D.	12″
Over 60″	36″	12″

The width of the trench shall not be greater than the maximum indicated above, at and below the level of the top of the pipe. The width of the trench above that level may be made as wide as necessary for sheeting and bracing, and for proper installation of the work.

If the maximum trench width as specified above is exceeded at the top of the pipe the Contractor shall provide, at no additional cost to the Contracting Agency, the necessary additional load bearing capacity by means of bedding, having a higher bedding factor than that specified, higher strength pipe, a concrete cradle, cap or encasement, or by other means approved in writing by the Engineer.

601.2.3 Trench Grade: Alignment and elevation stakes shall be furnished the Contractor at set intervals and agreed upon offsets. On water main projects, elevation stakes will be furnished only when deemed necessary by the Engineer. In all cases where elevation stakes are furnished, the Engineer will also furnish the Contractor with cut sheets.

For all pipe 12 inches or greater in diameter, the Contractor shall excavate for and provide an initial granular bedding at least 4 inches thick or 1/12 the O.D. of the pipe whichever is greater. This bedding material shall be placed at a uniform density with minimum compaction and fine graded as specified below.

Bell or coupling holes shall be dug after the trench bottom has been graded. Such holes shall be of sufficient width to provide ample room for caulking, banding, or bolting. Holes shall be excavated only as necessary to permit accurate work in the making of the joints and to insure that the pipe will rest upon the prepared bottom of the trench, and not be supported by any portion of the joint.

Depressions for joints, other than bell-and-spigot, shall be made in accordance with the recommendations of the joint manufacturer for the particular joint used.

601.2.4 Fine Grading: Unless otherwise specified in the plans and/or special provisions, the bottom of the trench shall be accurately graded to provide uniform bearing and support for each section of the pipe at every point along its entire length, except for portions of the pipe where it is necessary to excavate for bells and for proper sealing of the pipe joints.

601.2.5 Overexcavation: Except at locations where excavation of rock from the bottom of the trench is required, care shall be taken not to excavate below the depth indicated.

Unauthorized excavation below the specified grade line shall be refilled at the Contractor's expense with ABC material compacted to a uniform density of not less than 95 percent of the maximum density as determined by AASHTO T-99 and T-191 or ASTM D-2922 and D-3017. When AASHTO T-99, method A or B, and T-191 are used for density determination, MAG Detail 190 will be used for rock correction.

Whenever rock is encountered in the trench bottom, it shall be overexcavated to a minimum depth of six inches below the O.D. of the pipe. This overexcavation shall be filled with granular material placed with the minimum possible compaction.

Whenever unsuitable soil incapable of supporting the pipe is encountered, the Contractor will notify the Engineer and a field determination will be made as to the depth of overexcavation and the granular fill required.

601.2.6 Excavation for Manholes, Valves, Inlets, Catch Basins and Other Accessories: The Contractor may excavate to place the concrete structure directly against the excavated surface, provided that the faces of the excavation are firm and unyielding and are at all points outside the structure lines shown on the plans. If the native material is such that it will not stand without sloughing or if precast structures are used, the Contractor shall overexcavate to place the structure and this overexcavation shall be backfilled with the same material required for the adjoining pipe line trench and compacted per Table 601-2.

Any unnecessary excavation below the elevation indicated for the foundation of any structure shall be replaced with the same class of concrete specified for the structure or with 1 ½ sack controlled low strength material as specified in Section 728. When the replacement material is structural concrete, the material shall be placed at the same time as the structure. However, when using 1 ½ sack controlled low-strength material, placement of the material shall be per Section 604 which will require a time lag between the material and the structural concrete. The placement of the additional material shall be at no cost to the Agency.

601.2.7 Pavement and Concrete Cutting and Removal: Where trenches lie within the portland cement concrete section of streets, alleys, driveways, or sidewalks, etc., such concrete shall be sawcut to neat, vertical, true lines in such a manner that the adjoining surface will not be damaged. The minimum depth of cut shall be 1½ inches or ¼ of the thickness, whichever is greater.

Asphalt pavement shall be clean-cut, with approved equipment and by approved methods in accordance with the requirements of Section 336.

No ripping or rooting will be permitted outside limits of cuts. Surfacing materials removed shall be hauled from the job site immediately, and will not be permitted in the backfill.

601.2.8 Grading and Stockpiling: All grading in the vicinity of trench excavation shall be controlled to prevent surface water from flowing into the trenches. Any water accumulated in the trenches shall be removed by pumping or by other approved methods.

During excavation, material suitable for backfilling shall be piled in an orderly manner, a sufficient distance back from the edges of trenches, to avoid overloading and to prevent slides or cave-ins. Material unsuitable for backfilling, or excess material, shall be hauled from the job site and disposed of by the Contractor.

The Contractor shall, prior to final acceptance of the work, submit a letter to the Contracting Agency stating the location of each disposal site for all excess or unsuitable material and certify that he has obtained the property owner's permission for the disposal of all such materials.

Where the plans and/or special provisions provide for segregation of topsoil from underlying material for purposes of backfill, the material shall not be mixed.

601.2.9 Shoring and Sheeting: The Contractor shall do such trench bracing, sheathing, or shoring necessary to perform and protect the excavation as required for safety and conformance to governing laws. The bracing, sheathing, or shoring shall not be removed in one operation but shall be done in successive stages as determined by the Engineer to prevent overloading of the pipe during backfilling operations. The cost of the bracing, sheathing, or shoring, and the removal of same, shall be included in the unit price bid per foot for the pipe.

All shoring and sheeting deemed necessary to protect the excavation and to safeguard employees, shall be installed. See Section 107.

601.2.10 Open Trench: Except where otherwise noted in the special provisions, or approved in writing by the Engineer, the maximum length of open trench, where the construction is in any stage of completion (excavation, pipe laying or backfilling), shall not exceed 1320 feet in the aggregate at any one location.

Any excavated area shall be considered open trench until all ABC for pavement replacement has been placed and compacted. With the approval of the Engineer, pipe laying may be carried on at more than one separate location, the restrictions on open trench applying to each location. Trenches across streets shall be completely backfilled as soon as possible after pipe laying.

Substantial steel plates with adequate trench bracing shall be used to bridge across trenches at street crossings where trench backfill and temporary patches have not been completed during regular work hours. Safe and convenient passage for pedestrians shall be provided. The Engineer may designate a passage to be provided at any point he deems necessary. Access to hospitals, fire stations and fire hydrants must be maintained at all times.

601.3 PROTECTION OF EXISTING UTILITIES:

601.3.1 Utilities: Unless otherwise shown on the plans or stated in the specifications, all utilities, both underground or overhead, shall be maintained in continuous service throughout the entire contract period. The Contractor shall be responsible and liable for any damages to or interruption of service caused by the construction.

If the Contractor desires to simplify his operation by temporarily or permanently relocating or shutting down any utility or appurtenance, he shall make the necessary arrangements and agreements with the owner and shall be completely responsible for all costs concerned with the relocation or shutdown and reconstruction. All property shall be reconstructed in its original or new location as soon as possible and to a condition at least as good as its previous condition. This cycle of relocation or shutdown and reconstruction shall be subject to inspection and approval by both the Engineer and the owner of the utility.

The Contractor shall be entirely responsible for safeguarding and maintaining all conflicting utilities that are shown on the plans (Sections 107 and 105 apply). This includes overhead wires and cables and their supporting poles whether they are inside or outside of the open trench. If, in the course of work, a conflicting utility line that was not shown on the plans is discovered, the Contracting Agency will either negotiate with the owner for relocation, relocate the utility, change the alignment and grade of the trench or as a last resort, declare the conflict as "extra work" to be accomplished by the Contractor in accordance with Section 104.

601.3.2 Irrigation Ditches, Pipes and Structures: The Contractor shall contact the owners of all irrigation facilities, and make arrangements for necessary construction clearances and/or dry-up periods.

All irrigation ditches, dikes, headgates, pipe, valves, checks, etc., damaged or removed by the Contractor, shall be restored to their original condition or better, by the Contractor at no additional cost to the Contracting Agency.

601.3.3 Building, Foundations and Structures: Where trenches are located adjacent to building, foundations, and structures, the Contractor shall take all necessary precaution against damage to them. The Contractor shall be liable for any damage caused by the construction.

Except where authorized in the special provisions or in writing by the Engineer, water settling of backfill material in trenches adjacent to structures will not be permitted.

601.3.4 Permanent Pipe Supports: Permanent pipe supports for the various types and sizes of sewer, water and utility lines shall conform to the Standard Details or the details shown on the plans. Such pipe supports shall be erected at the locations shown on the plans and/or at any other locations as necessary as determined by the Engineer.

601.3.5 Electronic, Telephonic, Telegraphic, Electrical, Oil and Gas Lines: These underground facilities shall be adequately supported by the Contractor. Support for plastic pipes shall be continuous along the bottom of the pipe. Support for metal pipe and electrical conduit may be continuous or nylon webbing may be used for suspension at no greater than ten-foot intervals.

The Contractor shall avoid damaging the plastic pipe, pipeways or conduits during trench backfilling and during foundation and bedding placement.

There will be no measurement or payment for this work. The Contractor will include all associated costs in the unit bid price for the conduit installation.

601.4 FOUNDATION, BEDDING, BACKFILLING AND COMPACTION:

601.4.1 Foundation: The material upon which the conduit or structure is to be placed shall be accurately finished to the grade or dimensions shown on the plans or as directed by the Engineer. The bottom portion of the trench shall be brought to grade so that the conduit or structure will be continuously in contact with the material on which it is being placed. If rocky or unsuitable soil is encountered, Subsection 601.2.5 applies.

601.4.2 Bedding: Bedding shall consist of granular material containing no pieces larger than 1½ inches and free of broken concrete, broken pavement, wood or other deleterious material. Open graded rock will not be used without the written approval of the Engineer.

Where water consolidation is used, bedding for conduits, 24 inches or less in I.D., may be placed in one lift. For larger conduits the first lift shall not exceed the springline of the pipe.

Where mechanical compaction is used, the moisture content shall be such that the specified compaction can be obtained. The first lift shall be 8 inches or ⅔ of the distance to the springline whichever is greater. Succeeding lifts shall not exceed 2 feet loose and extreme care will be taken to prevent damage to or movement of the conduit by the compaction equipment.

601.4.3 Backfill: Backfill shall be sound earthen material free from broken concrete, broken pavement, wood or other deleterious material. Unless otherwise specified, this may be native material with no piece larger than 4 inches, select material or aggregate base course. Backfill under street pavement shall be constructed per Detail 200 with the type of replacement noted on the plans or in the special provisions. Unless otherwise noted, backfill under single curb, curb and gutter, sidewalk, driveways, valley gutters, etc. shall be the same as the adjacent street pavement.

Where water consolidation is used, backfill will be placed in lifts as required in the following table prior to settlement.

Trench Width	Backfill Lifts
18″ to 24″	Not to exceed 4′
25″ to 36″	Not to exceed 6′
Over 36″	Not to exceed 8′

The above backfill lift limitations are not applicable when water saturation is done by the jetting method.

Where mechanical compaction is used, backfill shall be placed in lifts the height of which shall not exceed that which can be effectively compacted depending on the type of material, type of equipment and methods used, and under no circumstances shall exceed 4 feet.

Backfill, around utilities that are exposed during trench excavation, shall be placed in accordance with the bedding methods.

601.4.4 Compaction Densities: Unless otherwise provided in the plans and/or special provisions, the trench backfill shall be thoroughly compacted to not less than the densities in Table 601-2 when tested and determined by AASHTO T-99 and T-191 or ASTM D-2922 and D-3017. When AASHTO T-99, method A or B, and T-191 are used for density determination, MAG Detail 190 will be used for rock correction.

The density required will depend on the Type shown on the plans and/or called for in the special provisions. Density required for each type shall comply to Table 601-2.

TABLE 601-2

MINIMUM TRENCH COMPACTION DENSITIES

Backfill Type	Location	From Surface To 2′ Below Surface	From 2′ Below Surface To 1′ Above Top of Pipe	From 1′ Above Top of Pipe to Bottom of Trench
I	Under any existing or proposed pavement, curb, gutter, sidewalk, or such construction included in the contract, or when any part of the trench excavation is within 2′ of the above.	100% for granular 95% for non-granular	90%	90%
II	On any utility easement street, road or alley right-of-way outside limits of (I).	85%	85%	90%
III	Around any structures or exposed utilities	95%	in all cases	

Note: The type required will generally be shown on the plans and the plans will govern. Where no type is shown on the plans the type shall comply with Table 601-2.

A consideration in determining the backfill Types as shown on the plans, is based on the trench widths as shown in the Contract Documents. If these trench widths increase beyond those widths referred to above and fall within the 2-foot limit of paved surfaces and other improvements due to construction exigencies, the backfill designation for that portion within the 2-foot limit of such improvements shall be Type I even though Type II backfill is shown on the plans.

601.4.5 Compaction Methods: Water consolidation by jetting shall be accomplished with a 1½″ pipe of sufficient length to reach the bottom of the lift being settled with adequate hose attached and a water pressure of not less than 30 psi. All jetting shall be accomplished traversely across the trench at intervals of not more than 6 feet with the jetting locations on one side of the trench offset to the jetting locations on the other side of the trench. The entire lift shall be leveled and completely saturated working from the top to the bottom.

Jetting shall be used as the consolidation method for all conduit bedding. The Contractor shall be entirely responsible for establishing each lift depth so as to avoid floating the conduit being placed and shall make any repair or replacement at no cost to the Contracting Agency. However, for conduit larger than 24 inches I.D. the first lift shall not exceed the springline of the conduit.

Flooding is not acceptable as a water consolidation method unless authorized in the specification or by a written change order. It will consist of the inundation of the entire lift with water and then puddled with poles or bars to insure saturation of the entire lift.

Where jetting or flooding is utilized and the surrounding material is such that it does not permit proper drainage, the Contractor shall provide, at his expense a sump and a pump at the downstream end to remove the accumulated water.

The use of water consolidation does not relieve the Contractor from the responsibility to make his own determination that such methods will not result in damage to existing improvements. The Contractor shall be responsible for any damage incurred.

Where water consolidation is not permitted or does not result in adequate compaction, the backfill material shall be compacted with hand and/or mechanical work methods using equipment such as rollers, pneumatic tamps, and hydro-hammers or other approved devices which secure uniform and required density without injury to the pipe or related structures.

Where Type I backfill is required, water consolidation will not be permitted for non-granular material, except in the following situation. In a new development prior to paving and prior to opening the area to public traffic, water consolidation, will be permitted for non-granular material at the Contractor's discretion and responsibility.

601.4.6 Specifications for Granular Material: For purposes of this specification, granular material shall mean material for which the sum of the plasticity index and the percent of the material passing a No. 200 sieve shall not exceed 23. The plasticity index shall be tested in accordance with AASHTO T-146 Method A (Wet Preparation), T-89 and T-90.

601.4.7 Rights-Of-Way Belonging to Others: Backfill and compaction for irrigation lines of the Salt River Valley Water Users' Association and Roosevelt Irrigation Districts and for trenches in State of Arizona and Maricopa County rights-of-way outside the limits of the Contracting Agency shall be accomplished in accordance with their permit and/or specifications.

601.4.8 Test Holes: Boring logs shown on the plans do not constitute a part of the contract and are included for the Contractor's convenience only. It is not intended to imply that the character of the material is the same as that shown on the logs at any point other than that where the boring was made. The Contractor shall satisfy himself regarding the character and amount of rock, grave, sand, silt, clay and water to be encountered in the work to be performed.

601.4.9 Foundation and Bedding for Electronic, Telephonic, Telegraphic, Electrical, Oil and Gas Lines: Foundation and bedding for these underground facilities shall be native material or sand which conforms to the grading requirement of ASTM C-33 for fine aggregate. When backfill material consists of aggregate base course, crushed stone, or other material containing stones, only sand will be used for foundation, and bedding. The foundation depth shall be six inches and bedding depth shall be one foot above the top of the facility. Compaction will be in accordance with Section 601.

601.5 PAVEMENT REPLACEMENT AND SURFACE RESTORATION:

601.5.1 Grading: The Contractor shall do such grading in the area adjacent to backfilled trenches and structures as may be necessary to leave the area in a neat and satisfactory condition approved by the Engineer.

601.5.2 Restoring Surface: All streets, alleys, driveways, sidewalks, curbs, or other surfaces, in which the surface is broken into or damaged by the installation of the new work, shall be resurfaced in kind or as specified to the satisfaction of the Engineer in accordance with Section 336.

601.5.3 Cleanup: The job site shall be left in a neat and acceptable condition. Excess soil, concrete, etc., shall be removed from the premises.

601.5.4 Temporary Pavement: The Contractor shall install temporary asphalt pavement or the first course of permanent pavement replacement in accordance with Section 336 immediately following backfilling and compaction of trenches that have been cut through existing pavement. Except as otherwise provided in Section 336, this preliminary pavement shall be maintained in a safe and reasonably smooth condition until required backfill compaction is obtained and final pavement replacement is ordered by the Engineer. Temporary paving removed shall be hauled from the job site and disposed of by the Contractor at no additional cost to the Contracting Agency.

601.6 PAYMENT:

No pay item will be included in the proposal, nor direct payment made for trench excavation, backfilling, compaction, or placement of temporary pavement. The cost of these features of the work shall be included in the unit price bid per linear foot for furnishing and laying pipe.

End of Section

ENCASEMENT OF WATER OR SEWER PIPE BY JACKING OR TUNNELING OPERATION

SECTION 602

602.1 DESCRIPTION:

The Contractor shall furnish all labor, material and equipment as required to perform the jacking or tunneling operation in accordance with the plans and specifications.

In the performance of the work, the Contractor shall comply with the lawful requirements of the affected Contracting Agencies, owners of public utilities and any other facilities which might be endangered by jacking or tunneling operations.

602.2 GENERAL:

Unless otherwise provided for by the Contracting or Permitting Agency the Contractor shall be responsible for determining the required thickness of the steel liner plate or steel casing in accordance with the manufacturer's recommendations.

The inside diameter of the steel liner plate or steel casing shall be a minimum of 12 inches larger than the largest outside diameter of the carrier pipe or the size indicated on the plans, whichever is greater. No part of the plates or flanges shall be allowed to extend inside this net diameter. It shall be the responsibility of the Contractor to increase such dimension where necessary to provide placement room for pipe bells or to provide adequate space for grout placement.

The tolerances allowed for the alignment and grade of carrier pipe shall be the same as if it was being installed in a trench (Sections 610, 615 and 618).

The approach trench for jacking or tunneling operation shall be shored to safeguard existing sub-structure and surface improvements and to protect against ground movement in the vicinity of the jack supports or tunnel portal.

602.3 JACKING OPERATION:

Before starting operations, the Contractor shall submit in accordance with Subsection 105.2, detailed shop drawing of the jacking pit bracing, the casing, the jacking head, the carrier pipe installation method and the bracing to prevent carrier pipe flotation and shifting.

The casing shall consist of welded steel pipe (ASTM A-283 Grade C). Shop and field joints shall be butt weld. Fabrication and welding shall be in accordance with AWWA C-200. Weld or hydrostatic testing is not required.

The leading edge of the casing shall be equipped with a steel jacking head, securely anchored to prevent any wobble or alignment variation during the jacking operation. Excavation shall not be made in advance of the jacking head and every effort shall be made to avoid any loss of earth outside of the jacking head. Excavated material shall be removed from the casing as excavation progresses and accumulation of material within the casing shall not be permitted.

Once the jacking operation has started, it shall be continued around the clock until the specified limits have been reached.

On steel casing 36 inches or larger (I.D.), grout connections shall be provided at a maximum spacing of 10 feet. Upon completion of the jacking operation, all voids around the outside face of the steel casing shall be filled by grouting. Grouting equipment and material shall be on the job site before the jacking operations are completed so that grouting may be started immediately. Grout shall be placed by means of pumps capable of pressures up to 100 psi unless otherwise approved by the Engineer. Grouting pressure shall be controlled to approximately 10 psi so as to avoid movement of the ground around the steel casing. After grouting has been completed, the grouting connections will be closed with threaded steel plugs.

Steel casing smaller than 36 inches (I.D.) will not require outside grouting unless caving or earth movement occurs.

602.4 TUNNELING OPERATIONS:

Before starting operations, the Contractor shall submit, in accordance with Subsection 105.2, detailed shop drawing of the steel liner plate, method of installing the steel liner plates, tunnel dimensions, method of backpacking any cave-ins or overexcavation, carrier pipe installation method, and the bracing to prevent carrier pipe shifting and flotation.

Only steel liner plates will be used for tunnel support. All plates shall be punched for bolting on both longitudinal and circumferential seams or joints and shall be fabricated for erection inside the tunnel. Grout connections will be provided on the liner plates at a maximum distance of 10 feet. The entire periphery of the tunnel will be lined allowing no gaps between the liner plates. Excavation of the tunnel section shall be restricted to the least clearance required to permit erection of the liner plate. Every effort will be made to prevent any loss of ground and the Contractor shall perform the grouting operation at intervals not to exceed three rings of the liner plate. Grout shall be placed by means of pumps capable of pressures up to 100 psi. The placement pressure shall not, normally, exceed 10 psi to avoid deformation of the liner plate or the ground. After grouting has been completed, the grout connection will be closed with threaded steel plugs.

602.5 DEWATERING:

All water encountered during the jacking or tunneling operation shall be disposed of by the Contractor in such a manner as will not damage public or private property or create a nuisance or health problem. The cost of furnishing pumps, pipes and equipment for dewatering will be considered incidental to the work and no additional payment will be made.

602.6 CARRIER PIPE PLACEMENT:

Carrier pipe, larger than 24 inches (I.D.), shall be placed using pipes or rails for alignment and grade. Carrier pipe, 24 inches I.D. or less, may be placed using pipes, rails or wooden skids, at the Contractor's option. In either case, it shall be the Contractor's responsibility to obtain the required alignment and grade for the carrier pipe and to ensure that the carrier pipe does not draw or rest on the casing or liner plate.

After the carrier pipe has been placed and securely blocked to prevent shifting or flotation, the entire annular space shall be completely filled with grout.

If the Contractor is not ready to place the carrier pipe immediately following completion of the jacking or tunneling operation, the ends shall be protected with temporary bulkheads. The approach trench shall be backfilled in accordance with Sections 601 and 336.

After completion of the grouting operation, the Contractor shall remove all loose and disturbed material in the approach trench and backfill the trench in accordance with Sections 601 and 336.

602.7 MEASUREMENT AND PAYMENT:

Measurement for this work shall be at the ground surface and shall be the number of horizontal linear feet of ground surface undisturbed by the cut and cover construction on the ends of the steel casing or tunnel liner operation. Payment compensation for furnishing all labor, material, tools, and equipment required for the successful completion of the jacking or tunneling operation, including carrier pipe placement, in accordance with this Section.

End of Section

SECTION 603

INSTALLATION FOR HIGH DENSITY POLYETHYLENE PIPE

603.1 DESCRIPTION:

The work covered by this specification consists of furnishing all plant, labor, equipment, appliances and materials and performing all operations in connection with a large-diameter High Density Polyethylene (HDPE) pipe installation in accordance with the plans, specifications and special provisions.

For installation procedures of HDPE for sewer line construction, see Section 615.

For installation procedures of HDPE for storm drain construction, see Section 618.

HDPE pipe and fittings shall conform to Section 738.

This section covers large-diameter HDPE pipeline installations of gravity and low-pressure storm drain and sanitary sewer construction.

For the purposes of this specification, low-pressure is defined as twenty-five (25) feet of water column or less.

For the purpose of this specification, large-diameter HDPE pipe shall include 18-inch to 120-inch nominal diameter.

603.2 EXCAVATION:

Excavation shall comply with Subsection 601.2, except for Trench widths (601.2.2). The width of the trench will be designed by the Engineer and included on the plans or in the special provisions.

603.3 PROTECTION OF EXISTING UTILITIES:

Protection of existing utilities shall comply with Subsection 601.3.

603.4 FOUNDATION, BEDDING, BACKFILLING AND COMPACTION:

603.4.1 Foundation: Foundation shall comply with Subsection 601.4.1.

603.4.2 Bedding: Coarse aggregate shall be used for bedding of large-diameter HDPE pipe. Coarse aggregate shall be in accordance with Subsection 603.4.6, for size, type, and gradation.

Coarse aggregate bedding shall be carefully deposited in 8-inches or less loose lifts, thoroughly and carefully compacted around the pipe, equally around both sides of the pipe, with approved vibratory compactors or other tools or equipment when applicable, or by shovel slicing as approved by the Engineer. This shall be repeated until enough material is placed and compacted to provide a minimum of one (1) foot cover over the top of pipe.

603.4.3 Backfilling: Backfilling shall comply with Subsection 601.4.3.

603.4.4 Compaction Densities: Compaction densities shall comply with Subsection 601.4.4.

603.4.5 Compaction Methods: For large-diameter HDPE pipe installations where the backfill and bedding material is coarse aggregate, mechanical compaction shall be the only method for consolidating backfill and bedding. Water consolidation shall not be used as a method of compaction for coarse aggregate whether used as a foundation, bedding or backfill material.

For large-diameter pipe installations where the backfill material is other than coarse aggregate, consolidation shall be by mechanical means. Water consolidation may be used as a compaction method for the backfill material only when prior written approval to do so is provided by the Engineer.

603.4.6 Specifications for Material: Coarse aggregate shall consist of crushed rock as defined in Section 701 with 100 percent of the specified size of aggregate having one fractured face, and having the gradation complying with ASTM D-448, Table 1, Size Numbers 6, 67, 68, 7, 78, or 8 as recommended by the Engineer. The gradation size number to be furnished shall be shown on the plans or in the project specifications.

603.4.7 Rights-of-Way Belonging to Others: Rights-of-way belonging to others shall comply with Subsection 601.4.7.

603.4.8 Test Holes: Test holes shall comply with Subsection 601.4.8.

603.4.9 Foundation and Bedding for Electronic, Telephonic, Telegraphic, Electric, Oil and Gas Lines: Foundation and bedding for electronic, telephonic, telegraphic, electric, oil and gas lines shall comply with Subsection 601.4.9.

603.5 PREPARING AND INSTALLING HDPE PIPE:

603.5.1 Strutting: Strutting of the pipe will be required when the diameter is 42-inches or larger. For diameters smaller than 42-inches, strutting may be required at the discretion of the Engineer.

Strutting consists of placing wood struts, whose length is typically 3% longer than the nominal pipe diameter, inside the pipe. A minimum of three (3) sets of struts are placed in each pipe length, oriented vertically, spaced equally throughout the length of pipe and set so as not to interfere with the jointing of the pipe. The struts shall be kept in place until the bedding material is placed and compacted around the pipe. The struts must be removed before any backfill or bedding is placed above the pipe. The procedure of strutting the pipe shall not damage the pipe in any way. If the pipe is out of round, the struts will be placed in the long direction of the out-of-round. If the strut cannot be held in place by the pipe, the pipe will be removed from the job site per Subsection 738.9.

603.5.2 Orienting: If the pipe is out-of-round, the pipe should be oriented so that the long axis is placed vertically when installed in the trench. When struts are used, the struts shall be oriented vertically when pipe is installed in the trench.

603.5.3 Installing Pipe: HDPE pipe and fittings shall be installed in accordance with ASTM D-2321. HDPE pipe shall be handled so as not to damage the pipe. Hoisting shall be accomplished with cloth belt slings or ropes. The pipe shall be protected by wood blocking when jointing is accomplished by pipe jacking, back hoe bucket, come-along, or cable pipe puller.

603.5.4 Affidavit of Installation: The Contractor's methods and procedures for installing HDPE will be reviewed in the field by the pipe manufacturer or his designated representative. The Contractor will make any adjustments in the installation as recommended by the manufacturer or his representative. If necessary, the Contractor may be required to reinstall or provide corrections to pipe installed prior to the field review. The manufacturer or his representative shall furnish to the Contracting Agency an affidavit (certification) that the Contractor's installation methods and procedures comply with the manufacturer's installation practices.

603.6 PAVEMENT REPLACEMENT AND SURFACE RESTORATION:

Pavement replacement and surface restoration shall comply with Subsection 601.5.

603.7 PAYMENT:

No pay item will be included in the proposal, nor direct payment made for trench excavation, backfilling, compaction, or placement of temporary pavement. The cost of these features of work shall be included in the unit price per bid per linear foot for furnishing and laying pipe.

Pipe shall be stored and handled in such a way to minimize out-of-roundness. Pipe shall be stored in shaded areas to minimize adverse effects of thermal, and ultraviolet exposure.

Pipe that is out-of-round in excess of 3% of the nominal pipe diameter as specified in Table 1 of ASTM F-894, shall not be installed and shall be removed if installed.

End of Section

SECTION 604

PLACEMENT OF CONTROLLED LOW STRENGTH MATERIAL

604.1 DESCRIPTION:

The work covered by this specification consists of furnishing all materials, labor and equipment for the placement of controlled low strength material (CLSM).

The following is a brief description of the types of controlled low strength material (CLSM) and their intended uses:

½ SACK: One half sack CLSM can be used as a general trench backfill in areas where future excavation into the backfill is anticipated or in areas of low loading such as streets, parking areas, behind retaining walls, etc.

1 SACK: One sack CLSM can be used as a general trench backfill and backfill behind retaining walls where additional strength is required above that of ½ sack CLSM.

1 ½ SACK: One and one half sack CLSM can be used as a structural backfill under foundations and as thermal fill and/or mechanical protection of duct banks and conduits.

The type of backfill to be used shall be as specified in the special provisions, plans or by the Engineer.

604.2 MATERIALS:

Controlled low strength material shall conform to the requirements of Section 728.

604.3 PLACEMENT:

The controlled low strength material shall be placed directly into the excavation. The CLSM shall be placed in a uniform manner that will prevent voids in or segregation of the material. Foreign material which falls into the trench prior to and during placing of the CLSM shall be immediately removed. The CLSM shall have consistency, workability, plasticity, flow characteristics and pumpability (when required) such that the material when placed is self-compacting. Mechanical compaction or vibration may be used to consolidate around structures, pipes, multiple conduits, etc., otherwise no mechanical compaction or vibration shall be required.

When CLSM is used for backfill around pipes or conduits, the CLSM shall be placed equally on both sides of pipe or conduit to prevent lateral displacement. Also, the CLSM shall be placed in lifts. The height of each lift shall not exceed the depth that will cause floating of the pipe or conduit. When placing the CLSM in greater lift depths, sufficient anchorage shall be provided so the pipe or conduit will not float.

Where CLSM is used for backfill around pipes or conduits with a depth less than 20 feet, the width of the excavation shown on the plans or in Section 601 may be reduced so that the minimum clear distance between the outside of the pipe or conduit and the side of the excavation (each side) shall be 12 inches for pipes or conduits 42 inches and larger, 6 inches for pipes or conduits between 4 inches and 42 inches and 3 inches for pipes or conduits 4 inches and smaller.

When CLSM is used behind retaining walls, the depth of each lift shall be limited so it will not induce hydraulic loads greater than the design loads.

For long trenches or installations which require a large amount of CLSM, bulkheads of wood, dirt, sand bags, etc. can be used to control the material's flowability. The bulkhead shall be removed prior to the continuation the backfilling.

CLSM shall NOT be permitted to come in contact with any aluminum, copper or brass materials, e.g., aluminum pipes or culverts, copper water pipe, saddles, fittings, etc. Protection shall be any combination of the following: place a layer of noncorrosive material around the pipe e.g., native material, import material, etc. or provide a protective covering or wrapping such as polyethylene wrap per Section 610.5. Pipes smaller than 4 inches can be completely wrapped with tape as per Section 610.5 or approved equal.

Generally, CLSM does not resist freezing and thawing and in some cases may propagate the condition. Further testing may be required prior to placing the material in a freeze-thaw condition.

604.4 PROTECTION:

When CLSM is placed within the traveled way or otherwise to be covered by paving or embankment materials, the material shall achieve a penetration resistance of 3 inches (indentation diameter) or less with 5 drops at a drop distance of 5 inches prior to covering and opening to traffic or the installation of the surface be delayed for 12 hours, which ever occurs first. Penetration resistance shall be as measured by ASTM Test Method C-6024, "Standard Test Method for Ball Drop on Controlled Low Strength Material to Determine Suitability for Load Application."

When CLSM is placed in foundation excavations, the material shall be protected from foundation loading and placement of foundation concrete prior to having reached initial set per ASTM C-403, or allowed to set in place for 24 hours, whichever occurs first.

Where the Engineer has identified soils as being moisture sensitive, a drainage notch or drain wick shall be placed longitudinally along the centerline of the trench or CLSM placement. The notch or wick shall be constructed within the first hour following placement. Drainage water shall be collected and removed at the end of notch or wick.

604.5 ACCEPTANCE:

CLSM shall be considered deficient and may be rejected at the discretion of the Engineer if:

(A) The CLSM is outside of the limits specified in Table 728-1 and/or

(B) The aggregate gradation is outside the limits specified in Section 701.3.5.

Rejected material not placed shall be immediately removed from the job site. Rejected material placed shall be removed and replaced with acceptable material. Removing and disposing of the rejected material shall be at no additional cost to the Contracting Agency.

604.6 PAYMENT:

No pay item will be included in the proposal nor direct payment made for CLSM. The cost for placing the material shall be included in the unit price bid for the specific work function (laying pipe, placing structure foundation, construction retaining wall, etc.).

End of Section

SECTION 605

SUBDRAINAGE

605.1 DESCRIPTION:

The subdrainage system shall be constructed in accordance with the notes and details shown on the plans and the applicable provisions of these specifications except as modified in the special provisions.

605.2 CONCRETE:

All concrete placed in drainage structures, subdrain outlets, pipe collars, and similar features of the subdrainage system shall conform to the applicable provisions of Section 725.

605.3 SUBDRAINAGE PIPE:

Subdrainage pipe, both perforated and non-perforated, shall be either bell and spigot concrete, bell and spigot vitrified clay, corrugated metal pipe, or asbestos-cement pipe as shown on the plans or specified in the special provisions. However, if the particular kind of pipe is not shown on the plans nor specified in the special provisions, subdrainage pipe shall be concrete pipe of at least standard strength quality and shall conform to the requirements of Section 736. Vitrified clay pipe shall conform to the requirements of Section 743. Asbestos-cement pipe shall conform to the requirements of Section 737. Corrugated metal pipe shall conform to the requirements of Section 760.

605.3.1 Pipe Joints: Unless the pipe joints are of a self-aligning type, have the bottom half of the bell joint filled with mortar to securely hold the pipe in alignment and to bring the inner surface of abutting pipes flush and even. Where a tight joint for non-perforated pipe is required, the bell joint shall be completely filled with mortar.

Asbestos-cement pipe joints shall be made with couplings in accordance with the recommendations of the pipe manufacturer.

605.4 SUBDRAINAGE MANHOLES:

Subdrainage manholes, including inlets, outlets, flap gates, gate boxes, and drop steps, shall comply with the requirements of the plans and the special provisions.

605.5 FILTER MATERIALS:

The filter materials shall be placed within the limits shown on the plans. The compositions of the filter materials shall each conform to one of the grading requirements in Table 605-1; the particular requirement to be used will be specified in the special provision.

The materials used shall conform to requirements for concrete aggregates in Section 701; however, the requirements for grading, and reactivity, as stated therein, shall not apply. The minimum bulk specific gravity shall be 2.50, by ASTM C-127.

TABLE 605-1

FILTER MATERIAL GRADING — % PASSING

Screen or Sieve Size	TYPE		
	F1	F2	F3
¾"		100	100
⅜"	100	80 — 100	70 — 100
No. 4	90 — 100	60 — 85	45 — 75
No. 8	75 — 90	45 — 70	30 — 60
No. 16	55 — 80	30 — 55	20 — 45
No. 30	30 — 60	15 — 40	10 — 30
No. 50	10 — 40	5 — 20	0 — 15
No. 100	0 — 15	0 — 10	0 — 5
No. 200	0 — 5	0 — 5	

605.6 PLACEMENT:

605.6.1 General: The excavated subgrade shall be kept free of surface water. Mudholes, ruts, or soft spots due to the Contractor's operations shall be repaired at no additional cost to the Contracting Agency, as ordered by the Engineer.

Filter and drain material shall be placed around drainage pipe so as to provide even support throughout the entire length of the pipe and to permit the installed pipe to lie upon true alignment and grade. The minimum thickness of filter material surrounding the pipe shall be 6 inches.

Filter material shall be spread to such depth as to obtain the required thickness after compaction and shall be uniform and true to the line and grades indicated on the plans.

The surface under sloped bank lining or invert shall not show any variation or departure greater than ½ inch from the testing edge of a 10 foot straightedge. Ridges and humps shall be regraded, depressions filled and compacted, and tested for straightness until grading is accomplished within the tolerance specified. No relative density will be required.

Pipe damage during placement or compaction shall be replaced by the Contractor at no additional cost to the Contracting Agency. The Contractor shall exercise due care to prevent water from surface drainage or other sources, mud, muck, or debris, from running into the filter material both during and after its placement, until the lining, backfill, or structure placed thereon is completed or set. The Contractor shall provide and operate drainage sumps and pumps, or equivalent means satisfactory to the Engineer, to prevent any such saturations of the filter materials.

605.6.2 Under Sloped Bank Lining: Those portions of filter materials which become subgrade for sloped bank lining shall be compacted by 4 passes of a small roller weighing not less than 600 pounds, and 20 pounds per inch of roller width, or by other means approved by the Engineer.

605.6.3 Under Invert: Those portions of filter materials which become subgrade for channel invert linings shall be compacted by 2 passes of a smooth-wheeled roller lapping 1 foot each pass, or by use of manually-operated hand tampers, or by other means as approved by the Engineer. The weight of the roller or the size of the tamper shall be approved by the Engineer.

605.6.4 In Trenches and Along Heels or Walls of Sides of Structures: The filter materials shall be placed in 1 foot lifts and compacted by hand-held tamping or vibrating equipment to the satisfaction of the Engineer.

605.7 TESTS OF THE SUBDRAINAGE SYSTEM:

Two separate tests shall be made on each subdrain line by the Contractor to assure the proper functioning of the subdrainage system.

Each test shall be conducted in the presence of the Engineer and shall consist of the flushing of the subdrain line with sufficient water to develop a flow of 5 cubic feet per minute out of the end of the line being tested, as measured by approved measuring equipment furnished by the Contractor.

When a channel invert slab is required, the first test of each completed section of the subdrain system shall be performed immediately prior to the placement of reinforcing steel for the channel invert slab and the second test shall be performed after completion of the channel invert work. Manholes shall be cleared of all debris prior to beginning the second test.

Final acceptance of the subdrainage system will be made only if the discharge is of uniform flow and of adequate quantity. Any necessary clearing of drain lines to meet the above requirements shall be performed by the Contractor at no additional cost to the Contracting Agency.

All costs involved in the performance of the tests, including the furnishing of all labor, equipment, and material required therefore, shall be included in the prices bid for the items under which the subdrainage system is to be constructed.

605.8 PAYMENT:

Payment for the work included in this specification will be made on the basis of the lump sum or unit prices stipulated in the proposal, unless the payment for subdrainage work is included in the cost for other improvements. Such payment shall include full compensation for furnishing all labor, tools, and equipment and incidentals for doing the work involved.

End of Section

SECTION 610

WATER LINE CONSTRUCTION

610.1 DESCRIPTION:

The construction of all water lines shall conform to applicable standard specifications and details, except as otherwise required on the plans or as modified in the special provisions.

610.2 GENERAL:

All pipe shall be delivered, handled and installed in accordance with the manufacturer's recommendations and/or applicable provisions of AWWA standards for installation of the various types of water mains specified, insofar as such recommendations and provisions are not in variance with the standard specifications and details.

Where water lines are to be constructed in new subdivisions or in conjunction with street repaving projects, the streets shall be pre-graded to within 6 inches of the new street subgrade prior to trenching or cut stakes shall be set for trenching.

610.3 MATERIALS:

All pipe for water lines shall be of the classes shown on the plans or as specified below.

(A) The 4-inch through 16-inch diameter pipe may be asbestos-cement or ductile iron, except where a particular material is specified. All pipe shall be minimum 150 P.S.I. design unless otherwise specified.

(B) Pipe 16 inches and larger may be either ductile iron, or concrete pressure pipe-steel cylinder type.

Ductile iron water pipe and fittings - Section 750. Asbestos-cement water pipe and fittings - Section 752. Concrete pressure pipe-steel cylinder type - Section 758.

610.4 CONSTRUCTION METHODS:

All water mains in major streets shall have a minimum cover of 48 inches over the top of the pipe. Water mains in other locations shall have a minimum cover over the top of the pipe as follows:

(A) 36 inches for mains smaller than 12 inches.

(B) 48 inches for mains 12 inches and larger.

Cover for water mains will be measured from existing or proposed finished grade of pavement or from natural ground, whichever is deeper.

No water main shall be deflected, either vertically or horizontally, in excess of that recommended by the manufacturer of the pipe or coupling, without the appropriate use of bends or offsets.

If adjustment of the position of a length of pipe is required after it has been laid, it shall be removed and rejoined as for a new pipe.

Every precaution shall be taken to prevent foreign material from entering the pipe while it is being placed in the line. At all times when a pipe laying is not in progress, the open ends of the pipe line shall be closed by a water-tight plug or other means approved by the Engineer.

Where restrained joints are specified on mains sixteen (16) inches in diameter and smaller, ductile iron pipe shall be used with an approved joint restraint method.

On mains sixteen (16) inches in diameter and larger where plans specify welding joints and where ductile iron pipe is furnished, joints shall be restrained by an approved joint restraint method for the distance specified.

Except as otherwise required in this specification, the special provisions, or by the Engineer, trench excavation, backfilling and compaction shall be in accordance with the requirements of Section 601. Backfilling may be accomplished as soon as the pipe line has been installed to the satisfaction of the Engineer, subject to the requirements for testing, as contained below.

Hydrostatic testing shall be in accordance with this specification.

All corporation stops used for testing and chlorination shall be left in the pipe line with the stop closed and all connecting pipe removed.

Curb stops with flushing pipes or fire hydrants shall be installed at the ends of dead-end mains according to standard details.

Thrust blocks shall be installed in accordance with this specification.

Valve boxes and covers shall be according to standard details.

Asbestos-cement pipe shall be installed in accordance with AWWA C-603, except pipe and fittings shall be in accordance with Section 752.

Cast iron pipe shall be installed in accordance with AWWA C-600, except pipe and fittings shall be in accordance with Section 750.

Ductile iron pipe shall be installed in accordance with this specification and pipe and fittings shall be in accordance with Section 750.

610.5 POLYETHYLENE CORROSION PROTECTION:

610.5.1 General: Where called for in the plans and specifications or directed by the Engineer, pipe, valves and fittings shall be protected from corrosion by encasement in a polyethylene protective wrapping referred to hereafter as polywrap. Although not intended to be a completely air and water tight enclosure the polywrap shall provide a continuous barrier between the pipe and surrounding bedding and backfill.

610.5.2 Materials: The polywrap shall be of virgin polyethylene, not less than 8 mils in thickness, formed into tubes or sheets as may be required. Naturally pigmented material may be used where exposure to ultra violet light will be less than 48 hours. Otherwise the material shall be pigmented with 2 to 2½ percent of well dispersed carbon black with stabilizers.

The polywrap shall be secured as specified below with 2 inch wide pressure sensitive plastic tape not less than 10 mils thick. Tape shall be Scotchrap No. 50, Polyken No. 900, Tapecoat CT, Johns-Manville No. V-10 Trantex, or approved equal.

The minimum tube size for each pipe diameter shall be per Table 610-1.

TABLE 610-1

POLYWRAP FLAT TUBE WIDTHS

Nominal Pipe Diameter (Inches)	Cast Iron Or Ductile Iron With Push-On Joints (inches)	Cast Iron Or Ductile Iron With Mechanical Joints (inches)
4	14	16
6	17	20
8	21	24
10	25	27
12	29	30
14	33	34
16	37	37
18	41	41
20	45	45
24	53	53

610.5.3 Installation: The polyethylene tubing shall be cut into lengths approximately 2 feet longer than the pipe sections. With the pipe suspended from the center the tube shall be slipped over the spigot end and bunched up between the point of support and the spigot end. After the pipe is installed into the bell of the adjacent pipe the pipe shall be lowered to the trench bottom and the supporting sling removed from the center of the pipe. The pipe shall then be raised at the bell end enough to allow the tube to be slipped along the full length of the barrel with enough left at each end to overlap the adjoining pipe about 1 foot. A shallow bell hole must be made at each joint to facilitate installation of the polywrap.

Pull the bunched-up polywrap from the preceding length of pipe, slip it over the end of the new length of pipe, and secure in place with one circumferential turn of tape plus enough overlap to assure firm adhesion. Then slip the end of the polywrap from the new pipe section over the end of the first wrap until it overlaps the joint at the end of the preceding length of pipe. Tape it in place.

The loose wrapping on the barrel of the pipe shall be pulled snugly around the barrel of the pipe, and excess material folded over the top of the pipe and the folds held in place by means of short strips of adhesive tape, at about 3 foot intervals along the pipe.

Repair any rips, punctures or other damage to the tube with the adhesive tape or pieces of tube material secured with tape.

Bends and reducers in the line shall be covered with polyethylene in the same manner as pipe.

Valves, tees, crosses and outlets shall be wrapped with flat sheets of the same material. The sheets shall be passed under valves and brought up around the body to the stem. Edges shall be brought together, folded twice and secured with the adhesive tape.

610.5.4 Payment: Payment for this item shall be per the provisions of Subsections 109.4 and 109.5 of the specifications unless this item is specifically called for on the plans or in the supplemental specifications or special provisions as a specific component and pay item for a given project.

610.6 VALVES:

Valves shall be installed in accordance with AWWA C-600 or AWWA C-603 modified as follows:

All tapping sleeves, gate valves, butterfly valves, air release and vacuum valves and corporation stops shall be in accordance with Section 630.

Just before installation in the trench, valves shall be fully opened and closed to check the action, and a record made of the number of turns required to fully open or close the valve. For valves 16 inches and larger, a member of the water utility shall be present to check the action and record the number of turns. The inside of all valves shall then be thoroughly cleaned and the valve installed.

Valves 12 inches and smaller in size shall be supported by concrete blocks, in accordance with the standard details.

Valves 16 inches and larger in size along with their bypass valves, shall be supported on concrete slabs, and/or concrete piers, as indicated on the plans.

Concrete supports shall be provided under valves in vaults and manholes, and shall be constructed an inch low, then grouted with non-shrink grout. Adjustable pipe supports shall be as indicated on the plans. Buried valves shall be supported on concrete blocks as detailed on the plans.

Valve boxes shall be installed over all buried valves in accordance with standard details.

Standard couplings or matching joints shall be used when more than one length of pipe is required, or when two or more pieces are joined, to form the valve box riser. Install extension stems on all valves where the operating nut is 5 feet or more below grade.

610.7 MANHOLES AND VAULTS:

Construction shall consist of furnishing all materials and constructing manholes or vaults complete in place, as detailed, including foundation walls, cast iron steps, frames, covers, and any incidentals thereto, at location shown on the plans.

Manholes shall be constructed to conform with the requirements of Section 625 and standard details, except the inside diameter shall be 60 inches.

Vaults shall be constructed of reinforced concrete conforming to Section 725 and of concrete pipe conforming to ASTM C-76 Wall A or B. Vaults shall be kept moist for 7 days before backfilling.

610.8 FIRE HYDRANTS:

The Contractor shall furnish all labor, materials, and equipment necessary to install fire hydrants complete in place at locations shown on the plans in accordance with the standard details and special provisions. Fire hydrants furnished by the Contractor shall conform to the requirements of Section 756.

If paint is chipped, scuffed, or otherwise damaged during handling and installation, the Contractor shall touch up such spots as may be designated by the Engineer.

All hydrants must be flushed and left in good working condition with the control valve open.

610.9 CONNECTION TO EXISTING MAINS:

Existing pipe to which connections are to be made shall be exposed by the Contractor as directed by the Engineer, to permit field changes in line, grade or fittings, if necessary.

All connections to existing mains shall be constructed according to the plans.

Valves connecting new work to the existing system shall be kept closed at all times.

Only Agency personnel shall operate existing valves. The Contractor shall not operate valves in the existing system.

After disinfected samples have been taken and the new work passes the bacteriological tests, the new line shall then be turned over to the Contracting Agency with all branch lines and tie-in valves closed.

When shutdown of an existing water main is necessary in order to connect to the new lines, the Contractor shall make application and pay the required charges to the Contracting Agency. A conference between the Contractor's representative, Engineering Inspection, and Water Distribution personnel shall establish the time and procedures to insure that the shutdown will be for the shortest possible time. If necessary to minimize inconvenience to customers, shutdowns may be scheduled during other than normal working hours. The water supply to some customers, such as hospitals, cannot be shut off at any time. Provisions to furnish a continuous supply of water to such establishments will be required. After the procedures and time for a shutdown are agreed upon, it shall be the Contractor's responsibility to notify all customers in advance that the water will be turned off. When possible, customers shall be notified 24 hours in advance and in no case, except in emergency, shall notification be less than 30 minutes. Notification shall be in writing, giving the reason for the shutdown and the time and duration the water service will be shut off.

The Contracting Agency will close existing valves, but will not guarantee a bone-dry shutdown.

610.10 METER SERVICE CONNECTIONS:

All new meters must be installed by the Contracting Agency after the proper application as required by Code with fees paid at prevailing rates.

When plans call for connections from a new water main to an existing water meter, the work shall include new copper pipe and fittings except as follows:

(A) Wrapped galvanized pipe shall be used to connect or extend existing galvanized service pipe. Type K soft copper pipe or tubing shall be used to connect or extend existing copper service pipe except when otherwise called for in the plans.

(B) When the existing main is not abandoned, and the existing meter is to be connected to the new line, the corporation stop at the old main shall be closed and the abandoned service line cut 6 inches from the old main.

(C) Taps and service connections to the new main shall be made prior to testing and disinfection of the new line.

(D) Meter service piping may be installed by drilling in place of open cut construction when approved by the Engineer.

When called for on the plans, the meter and box shall be relocated by the Contractor as directed by the Engineer. Existing meters which are shown on the plans to be relocated shall be located and installed in accordance with standard details.

Water meter boxes which are broken during construction shall be replaced by the Contractor at no additional cost to the Contracting Agency. Existing meter boxes which are already broken prior to start of construction shall be replaced by the Contractor with boxes furnished by the Contracting Agency. Boxes may be picked up by the Contractor after written authorization is received from the Engineer. The written authorization shall include the street address of each broken meter box and the size of meter box required. All water meter boxes shall conform to the standard details.

610.11 FIRE LINE SERVICE CONNECTIONS:

Fire line service connections shall be installed in accordance with standard details.

The fire line from the control valves at the main to the detector check valve shall be constructed of cast iron or ductile iron pipe to Section 750.

610.12 COUPLINGS, JOINTS, GASKETS AND FLANGES:

(A) Couplings: The couplings used to join the pipe to flanged valve adapters shall be Dresser Style 38, Smith-Blair 411 or an approved equal.

(B) Joints: The joints and fitting shall conform to Sections 750 and 752.

(C) Bolts and Nuts:

(1) For pipe 12 inches and smaller: Bolts and nuts for use in field connections or for connecting fittings shall be carbon steel equivalent to ASTM A-307, Grade B, with cadmium plating in accordance with ASTM B-766, except that the minimum thickness of the plating shall be .00020 inches. Cadmium plated bolts shall have Class 2A threads and the nuts used with them shall have Class 2B threads. All bolt diameters shall normally be ⅛ inch smaller than the bolt hole diameter. High strength, heat treated cast iron tee-head bolts with hexagon nuts, all in accordance with the strength requirements of AWWA C-111, may be used in lieu of the cadmium plated bolts and nuts for jointing mechanical joint cast iron or ductile iron pipe and fittings only.

(2) For pipe 16 inches and larger: All bolts and nuts on flanges for valves and flexible couplings shall be carbon steel equivalent to ASTM A-307, Grade B. Bolt diameters shall normally be ⅛ inch smaller than the bolt hole diameters.

These bolted joints shall be protected as follows: Following installation and before backfilling, all couplings, steel flanges, bolts, nuts, anchor bolts and rods, bolting of all flanged valves, and all exposed steel shall be protected from corrosion by either of the two methods outlined below at the Contractor's option.

(a) Below ground installations shall be coated with NO-OX-ID "A" with a film of not less than 1/32 inch thick and then coated with cement mortar not less than 1 inch thickness before backfilling. Cement mortar shall be composed of 1 part cement, ASTM C-150, Type II, low alkali, to 3 parts sand. Before application of the cement mortar coating the area to be protected shall be covered with a layer of 2 x 2 incb No. 14 gage welded wire fabric, firmly wired in place.

(b) Below ground installations shall be protected by the application of hot coal-tar enamel. The coal-tar enamel shall be in accordance with AWWA C-203 and shall be applied to the top part of the pipe or fittings by daubers for at least 2 coats for a total minimum thickness of 1/16 inch. The coal-tar for under side of the pipe flanges or fittings shall be applied by the pan or cocoon method as described below and in AWWA Manual M-11, Steel Pipe.

Pan Method: The coating pan is securely anchored in place on the underside of the pipe and straddling the connection to be coated. The pan shall be wide enough so that the entire connection will be coated.

Hot coal-tar enamel is poured into the pan, from one side only, until the pan is completely filled. The drain plug or valve, is then opened and the excess coal-tar drained out. The pan can then be removed. Details of the coating pan and corresponding dimensions are given in AWWA Manual M-11.

The upper portion of the connection, and all remaining exposed steel pipe, will then be coated by the use of a dauber. The coal-tar coating shall be applied in at least 2 coats for a minimum thickness of 1/16 inch. The daubers and method of application conform to AWWA C-203. No thinning will be allowed.

Cocoon Method: The cocoon is formed by placing glass fiber cloth or roofing paper, of the proper width, around the underside of the connection and adjacent exposed steel pipe. The edges of the cocoon shall be securely fastened to the pipe. Backfill is lightly placed to the spring line, and the top of the cocoon is opened and layed back on the filled area and hot coal-tar enamel poured, from one side only, until the cocoon is completely filled. The loose backfill prevents rupture of the cocoon. The upper portion of the connection and remaining exposed steel pipe shall be coated as above.

(D) Gaskets: Except as otherwise provided, all gaskets for pipe lines shall be one piece full faced gaskets from one-ply cloth inserted SBR rubber material. Gaskets for flanges 20 inch and smaller shall be from 1/16 inch thick material. Gaskets for flanges 24 inches and larger shall be from ⅛ inch thick material. Gasket material shall be J-M 109 as manufactured by Johns-Manville Corporation or an approved equal. Physical characteristics of the rubber compound shall meet ASTM D-2000, Class 4AA805A13.

(E) Flanges: Cast iron flanges shall conform to AWWA C-110 as to material, diameter, thickness, drilling, etc. Steel flanges shall be ring or hub type, and shall conform to AWWA C-207, Class D. All flanges shall be drilled and have flange diameters and bolt circles conforming to AWWA C-110, except bolt holes will be ⅛ inch larger than the bolts given for the various sizes. All bolts shall be as specified above and all flanges shall have a flat facing.

610.13 BLOCKING:

All pipe lines, valves and fittings 16 inches and smaller in diameter shall be blocked with concrete thrust blocks in accordance with standard details. Thrust block areas for pipe, valves and fittings larger than 16 inches in diameter shall be calculated for each size pipe, valve and fitting to be installed and shown on the plans.

Thrust block areas shall be calculated on the basis of 200 psi test pressure bearing against undisturbed 3,000 psf soil.

If soil or pressure conditions other than those stated above are encountered, the thrust block areas shall be calculated and submitted for approval. The areas stipulated in the standard details are minimum and shall not be decreased.

When restrained/welded joints are specified to resist thrust forces, blocking is not required.

With the Engineers approval, restrained/welded joints may be used in lieu of thrust blocks to resist thrust forces.

610.14 TESTING:

Water lines, including all fittings and connections to the water mains shall be tested for watertightness by subjecting each section to hydrostatic tests in accordance with applicable provisions or AWWA C-600, except as modified below, and shall consist of pressure test and leakage tests. The Contractor shall provide all vents, piping, plugs, bulkheads, valves, bracing, blocking, pump, including measuring device and all other equipment necessary for making the tests, except pressure gages, and shall pay the Contracting Agency for water used in the tests.

(A) Pressure Tests: Water lines, including all fittings and connections to the water mains shall be tested for watertightness by subjecting each section to pressure test, measured at the lowest end of the section under test. The test pressure shall be at least 200 psi for lines smaller than 16 inches and 150 psi for lines 16 inches or larger unless otherwise noted. The duration of each pressure test shall be at least 2 hours. Each section of a new line between sectionalizing valves or between the last sectionalizing valve and the end of the project shall be tested separately as required in AWWA C-600, and/or as modified in these specifications, except that any such section less than 500 feet in length may be tested with the adjacent section, if both sections of line have the same pipe class rating. No section greater than ½ mile in total pipe length shall be tested without special written permission of the Engineer.

The test may be made before or after backfilling. However, if mechanical compaction is to be used in the backfilling operations as spelled out in AWWA C-600, the test shall not be made until the backfilling is completed and compacted. All connections, blowoffs, hydrants and valves shall be tested with the main as far as is practicable.

The test section shall be slowly filled with potable water and all air shall be vented from the line. The rate of filling shall be as determined by the Superintendent of Water Distribution, with at least 24 hour notice required before tests are scheduled. While the test section is under test pressure, a visual inspection for leaks may be made along the pipe line, and all visible leaks repaired. The pressure test shall not begin until the pipe has been filled with water for at least 24 hours to allow for absorption.

(B) Leakage Tests: Leakage tests shall be made after pressure test has been satisfactorily completed and all backfilling and compaction is completed to top of trench. The Contractor shall furnish the necessary apparatus and assistance to conduct the test. The duration of each leakage test shall be at least 2 hours. To pass the leakage test, the leakage from the pipe line shall not exceed the leakage allowed by the following formula:

$$L = \frac{ND\sqrt{P}}{4500}$$

in which

L = allowable leakage in gallon per hour.

N = number of joints in the pipe line being tested, this "N" being the standard length of pipe furnished divided into the length being tested, with no allowance for joints at branches, blowoff, fittings, etc.

D = nominal diameter of pipe in inches.

P = average observed test pressure of the pipe being tested, equal to at least 100 percent of the class rating of pipe being tested, in psi gage, based on the elevation of the lowest point in the line or section under test and corrected to the elevation of the test gage.

Should the test on any section of the pipe line show leakage greater than specified above, the Contractor shall locate and repair the defective pipe, fittings, or joint until the leakage is within the specified allowance of 2 hour duration.

Leakage is defined as the quantity of water necessary to be supplied into the pipe line section under test to maintain the specified leakage test pressure after the pipe line has been filled with water and all air expelled. All repairs and retests, if required, shall be made at the Contractor's expense.

Connections to the existing pipelines or existing valves shall not be made until after that section of new construction has satisfactorily passed the hydrostatic tests.

Cast iron and Ductile pipe used in conjunction with ACP will be tested to the ACP standards, unless otherwise directed by the Engineer. High pressure systems of all cast iron or Ductile iron will be tested in accordance with AWWA C-600, Section 4.1.

Backfill and compaction for the full distance encompassed by restrained\welded joints shall be completed prior to testing.

610.15 DISINFECTING WATER LINES:

After pressure testing and before placing in service, all water lines shall be disinfected. Disinfection shall be accomplished in accordance with Section 611. All valves in the lines being disinfected shall be opened and closed several times during the 24 hour period of disinfection.

610.16 PAVEMENT AND SURFACING REPLACEMENT:

Pavement and surfacing replacement shall be in accordance with the requirements of Section 336.

610.17 CLEANUP:

When testing, chlorination, compaction, and cleanup do not follow pipe laying in an orderly manner, the Engineer reserves the right to close down trenching and pipe laying until these operations are adequately advanced.

610.18 MEASUREMENT AND PAYMENT:

(A) Pipe:

(1) Measurement of all pipe shall be of the linear feet of pipe installed, measured along the centerline of the pipe, through all valves and fittings, from the centerline of the fittings or centerline of valves on ends of pipe to the centerline of fittings, centerline of valves on ends of pipe or to the end of pipe, as the case may be, for all through runs of pipe. Measurement shall be to the nearest 0.1 foot.

Measurement of branch line pipe shall start at the centerline of valve at connection to the main. Branches of tees that are valved and capped will not be measured.

Measurement of meter service pipe shall be from the centerline of the new main to the connection at the meter, along the centerline of service pipe.

(2) Payment will be made at the unit price bid per linear foot of each type and size of pipe called for in the proposal. Such payment shall be compensation in full for furnishing and installing the pipe and fittings, specials, adapters, etc., complete in place, as called for on the plans and/or on the standard details, and shall include all costs of excavation, removal of obstructions, shoring and bracing, bedding, backfilling, compaction, maintenance of traffic, testing, disinfecting, connections to existing lines or works, and all work not specifically covered in other pay items.

A contingent item for cast iron fittings not shown on the plans shall be included in the proposal. Payment will be made at the unit price bid per pound on the theoretical weight of the fittings installed, which shall be compensation in full for furnishing and installing the fittings.

(B) Service Connection To Existing Water Meters:

(1) Measurement shall be of the number of unit connections made for water meter services, as called for in the proposal. Each proposal item unit shall consist of the connection to the water main and to the meter, as required in standard details.

(2) Payment will be made at the unit price bid for each unit water meter service connection and shall be compensation in full for labor materials (other than pipe) equipment, tapping, and all necessary incidentals. Payment for new service pipe required to make the connection will be made separately, as stipulated above.

(C) Relocation of Existing Meters and Boxes: Measurement shall be of the number of meters and boxes moved and reinstalled. Payment will be made at the unit price bid in the proposal for each meter and box relocated and installed.

(D) Permanent Pipe Supports and Encasement of Existing Pipes: Measurement shall be of each unit included in the proposal, and payment shall be compensation in full for supporting or encasing existing pipe, as required on the plans, including excavation, form work, reinforcing, concrete, handling and controlling flows in the existing pipe, removing and replacing existing pipe where necessary, supporting, backfilling and compaction, and pavement and/or surfacing replacement required in excess of pay width(s) allowed in Section 336.

(E) Concrete Thrust Blocks: Concrete thrust blocks and anchors for all pipe 16 inch and larger shall be measured by the cubic yard(s) of concrete placed, as required on the plans and/or as directed by the Engineer. Payment will be made at the unit price bid per cubic yard, and shall be compensation in full for excavation, formwork, placing and finishing concrete, reinforcing, backfilling and compaction, and pavement and/or surfacing replacement required in excess of pay width(s) allowed in Section 336. All thrust blocks and anchors for 12 inch and smaller pipe shall be included in the linear foot cost of the pipe.

(F) Valves: Measurement of and payment for valves, tapping sleeves and valves, and valve boxes shall be for each item furnished and installed, as designated in Section 630.

(G) Fire Hydrants: Measurement shall be the number of fire hydrants installed. Payment will be at the unit price bid for the installation of each fire hydrant complete in place and in operating condition. The 6 inch cast iron pipe and fittings, required for making the connection from the main to the hydrant, shall be a separate pay item in the proposal as described above.

(H) Pavement and/or Surfacing Replacement: Payment for pavement and/or surfacing replacement will be made as stipulated in Section 336, except as otherwise established in this specification. The cost of pavement and/or surface replacement required for meter service installations shall be included in the price bid for meter service pipe.

End of Section

SECTION 611

DISINFECTING WATER MAINS

611.1 CLEANING AND TREATING PIPE:

The interior of all pipe and fittings shall be kept as free as possible of all dirt and foreign material at all times, until the pipe is placed in the new line.

If in the opinion of the Engineer, the pipe contains dirt that will not be removed during the flushing operation, the interior of the pipe shall be cleaned and swabbed, as necessary, with a .005 to .010 percent chlorine solution.

611.2 LAYING PIPE:

If the Contractor or pipe-laying crew cannot install the pipe in the trench without getting earth into it, the Engineer may require that, before lowering the pipe into the trench, a heavy, tightly woven canvas bag of suitable size be placed over each end of the pipe and left there until the connection is to be made to the adjacent pipe.

At the close of each day's work, the end of the last laid section of pipe shall be plugged, capped, or otherwise tightly closed to prevent the entry of foreign material of any nature.

611.3 PREVENTING TRENCH WATER FROM ENTERING PIPE:

At times when pipe laying is not in progress, the open ends of the pipe shall be closed by a watertight plug or other means approved by the Engineer. Joints of all pipe in the trench shall be completed before the work is stopped. If water is in the trench, the seal shall remain in place until the trench is pumped dry.

611.4 PACKING MATERIAL:

Only such packing materials as are included in the list of acceptable materials in AWWA C-600 for installation of cast iron water main, shall be used. The packing materials shall be handled in such a manner as to avoid contamination, and shall be dry when placed in the joints. All such materials shall be free of oil, tar, or greasy substances, except that treated paper packing material, jute, cement, or sulphur compound caulking will not be permitted.

611.5 FLUSHING COMPLETED PIPE LINES:

(A) Preliminary Flushing: All mains 12 inches and smaller shall be flushed, prior to chlorination, as thoroughly as possible with the water pressure and outlets available. Flushing shall be done after the pressure test has been made. It must be understood that flushing removes only the lighter solids and cannot be relied upon to remove heavy material allowed to get into the main during laying. It is difficult to flush mains over 12 inches in diameter, so in such instances the requirements above, must be rigidly adhered to.

Heavy duty, factory bushed, tapped couplings, with corporation stops shall be located at all high points in the lines to allow the air to be removed prior to testing the water lines and at disinfection points as may be required. Field taps will not be permitted.

The couplings, at high points and disinfection points, shall be left exposed during backfilling until the testing is complete. Couplings and corporation stops shall be left on the mains upon completion of water mains.

(B) Valve Damage by Foreign Material: Unless proper care and thorough inspection are practiced during the laying of water mains, small stones, pieces of concrete, particles of metal, or other foreign material may gain access to mains newly laid or repaired. If it is believed that such foreign material(s) may be in the main, all hydrants on the line shall be thoroughly flushed and carefully inspected after flushing to see that the entire valve operating mechanism of each hydrant is in good condition.

611.6 CHLORINE RESIDUAL:

Before being placed in service, all new mains and repaired portions of, or extensions to existing mains shall be chlorinated so that a chlorine residual of not less than 10 ppm remains in the water after 24 hours standing in the pipe.

611.7 METHODS OF APPLYING CHLORINE:

Any of the following methods of application of chlorine (arranged in order of preference) may be used, subject to the approval of the Engineer.

Liquid chlorine gas-water mixture.

Direct chlorine feed.

Calcium or sodium hypochlorite and water mixture.

611.8 APPLICATION OF LIQUID CHLORINE:

A chlorine gas-water mixture shall be applied by means of a solution-feed chlorinating device or, if approved by the Engineer, the dry gas may be fed directly through proper devices for regulating the rate of flow and providing effective diffusion of the gas into the water within the pipe being treated. Chlorinating devices for feeding solutions of the chlorine gas or of the gas itself must provide means for preventing the backflow of water into the cylinder.

611.9 CHLORINE-BEARING COMPOUNDS IN WATER:

On approval of the Engineer, a mixture of water and a chlorine-bearing compound of known chlorine content may be substituted for liquid chlorine.

(A) Compounds to be Used: The chlorine-bearing compounds that may be used are: Calcium hypochlorite*, and sodium hypochlorite**.

(B) Preparation of Mixture: High-test calcium hypochlorite must be prepared as a water mixture for introduction into the water mains. The powder should first be made into a paste and then thinned to approximately a 1 percent chlorine solution (10,000 ppm). The preparation of a 1 pereent chlorine solution requires the following proportions of powder to water:

Product	Amount of Compound	Quantity of Water (Gallons)
High-test calcium hypochlorite (65—70% Cl)	1 lb.	7.50
Liquid laundry bleach (5.25% Cl)	1—2 pts.	12.6

611.10 POINT OF APPLICATION:

The preferred point of application of the chlorinating agent is at the beginning of the pipe line extension or any valved section of it and through a corporation stop inserted in the top of the newly laid pipe. The water injector for delivering the chlorine-bearing water into the pipe should be supplied from a tap on the pressure side of the gate valve controlling the flow into the pipe line extension.

611.11 RATE OF APPLICATION:

Water from the existing distribution system or other source of supply shall be controlled so the rate of flow shall not exceed 500 gpm, unless approved by the Superintendent of Water Distribution, through a suitable measuring device into the newly laid pipe line during the application of chlorine. The rate of chlorine solution flow shall be in such proportion to the rate of water entering the pipe that the chlorine dose applied to the water entering the newly laid pipe shall produce at least 10 ppm of residual chlorine after 24 hours standing in the pipe. This may be expected with an application of 50 ppm, although some conditions may require more.

---

*Comparable to commercial products known as HTH, Perchloron, and Pittchlor.

**Known commercially as liquid laundry bleach.

On lines 12 inches in diameter or less, determination of the rate of flow of water into the line to be treated may be made by starting with the line full of water and measuring the rate of discharge at a hydrant located at the end of the pipe farthest away from the point of chlorine application.

For lines larger than 12 inches in diameter, the disinfection operation is generally started with the line empty.

Measurement of the flow of water into and out of all lines shall be made by means of a pilot gage, current type meter, or other approved device.

611.12 PREVENTING REVERSE FLOW:

Valves shall be manipulated so that the strong chlorine solution in the line being treated will not flow back into the line supplying the water. Check valves shall be used to accomplish this.

611.13 RETENTION PERIOD:

Treated water shall be retained in the pipe long enough to destroy all nonspore-forming bacteria. This period should be at least 24 hours and should produce no less than 10 ppm residual chlorine at the extreme end of the line at the end of the retention period.

NOTE: If the circumstances are such that less than a 24 hour retention period must be used, the chlorine concentration shall be increased to 100 ppm. Under these conditions, special care should be taken to avoid attack on pipes, valves, hydrants and other appurtenances.

611.14 CHLORINATING VALVES AND HYDRANTS:

In the process of chlorinating newly laid pipe, all valves or other appurtenances shall be operated while the pipeline is filled with the chlorinating agent.

611.15 FINAL FLUSHING, SAMPLING AND TESTING:

Following chlorination, all treated water in the newly laid pipeline shall be thoroughly flushed until the replacement water throughout the new pipeline can be proved, by laboratory testing, comparable in quality to the water served to the public from the existing water system. Prior to sampling for laboratory testing, the residual chlorine throughout the length of the pipeline shall be reduced to 1.0 ppm or less. Once the required residual chlorine level in the pipeline is achieved, samples shall be taken as outlined below.

The Contracting Agency or its authorized representative will collect all samples for testing of the new water mains. To initiate the sampling and testing, the Contractor will present to the Contracting Agency a written request for such work no later than 24 hours prior to the time when samples are to be taken.

Samples shall be taken from a tap and riser located and installed in such a way as to prevent outside contamination. Samples shall never be taken from an unsterilized hose of fire hydrant, because such samples will seldom meet bacteriological standards. The number of sampling locations shall be as follows: Waterlines up to but less than 150 feet in length require one sampling riser installed as near the end as possible; lines 150 feet to 300 feet in length, two sampling risers, one near each end of the line; lines 300 to 3,000 feet in length, a minimum of three sampling risers. In addition, dead ends on main lines should be represented with a sampling riser.

The number of samples taken at each sampling location shall be determined by the Contracting Agency based on one of the following methods.

a. One sample from each sampling location which is examined and analyzed in the laboratory over a three day (72 hour) period.

b. Two samples taken on separate days from each sampling location. Satisfactory water quality of the new main shall continue for a period of at least two days (48 hours) as demonstrated by laboratory examination of these samples.

Upon completion of laboratory testing, results of all tests shall be sent by the laboratory to the Contracting Agency. Results of laboratory analysis will be interpreted by the Contracting Agency, and reported to the Contractor. Under no circumstance shall the Contractor contact the laboratory. If there is need for test results before written reports are submitted, such information shall be obtained only from the Contracting Agency or its authorized representative.

611.16 REPETITION OF CHLORINATION PROCEDURE:

Should the initial treatment fail to result in the conditions specified above, the original chlorination procedure shall be repeated until satisfactory results are obtained.

611.17 PAYMENT:

No separate pay item shall be contained in the proposal for disinfecting water mains. This operation shall be included in the price bid for the water mains, installed complete in place, as specified in the proposal.

End of Section

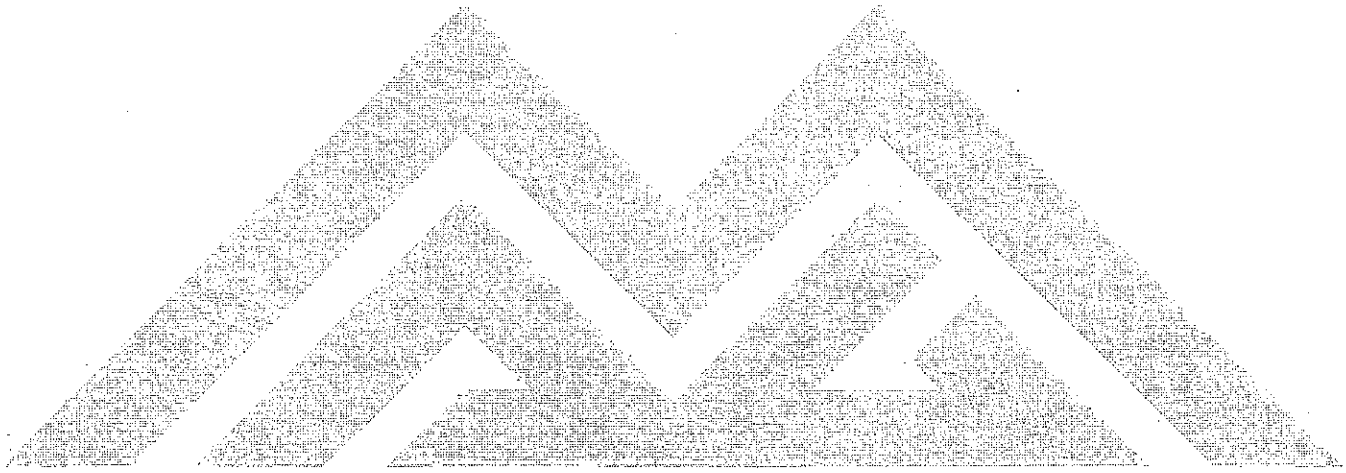

SECTION 615

SEWER LINE CONSTRUCTION

615.1 DESCRIPTION:

The construction or extension of sewer lines shall conform to the applicable standard specifications and details, except as otherwise required on the plans or as modified in the special provisions.

Concrete pipe shall conform to Section 735. High density polyethylene (HDPE) pipe shall conform to Section 738. Vitrified clay pipe shall conform to Section 743. Polyvinylchloride (PVC) pipe and fittings shall conform to Section 745.

615.2 TRENCHING:

Excavation of trenches shall be accomplished in accordance with Sections 601, and 603 for HDPE pipe.
The Engineer shall furnish the Contractor alignment and elevation stakes at agreed-upon intervals and offset together with cut sheets showing the difference in elevation from the top of the stakes to the flow line of the pipe.

The trench shall be dry when the fine grading of the bottom of the trench is accomplished. Before placement of pipe the fine grade shall be carefully checked by use of a string line, laser beam, or other means so that when in final position the pipe will be true to line and grade, ±0.05 feet for 8 inch through 12 inch, ±0.10 feet for 15 inch and larger.

For PVC pipe installation the width of trench as listed in Table 601-1 or as given in the contract documents may be increased to provide sufficient space for the installation of fittings or for compaction of the bedding. For HDPE pipe installation, the width of the trench will be per Subsection 603.2. The adjusted maximum width at the top of the pipe must be approved by the Engineer. The adjustment of the trench width to accomplish the above shall be done at no additional cost to the Contracting Agency.

615.3 LAYING PIPE:

Pipe shall be of the type, class, and size called for on the plans. All pipe shall be protected during handling against impact shocks and free falls. No damaged or defective pipe shall be installed in the work. Pipe shall be kept clean at all times, and as the work progresses, the interior of the pipe shall be cleared of all dirt and superfluous materials of every description.

The laying of the pipe shall be in finished trenches free from water or debris, and shall be commenced at the lowest point, with the spigot ends pointing in the direction of the flow. Each pipe shall be laid firmly and true to line and grade, in such manner as to form a close concentric joint with the adjoining pipe and to prevent sudden offsets of the flowline. Any adjustment to line and grade shall be made by scraping away or filling in under the body of the pipe, never by wedging or blocking under the pipe ends.

The alignment and grade of each length of pipe shall be checked after setting by measurement from the string line, laser beam target or other means approved by the Engineer.

At all times when work is not in progress, open ends of the pipe and fittings shall be securely closed to the satisfaction of the Engineer, so that no water, earth or other substance will enter the pipe or fittings.

HDPE and PVC pipe and fittings shall be installed in accordance with ASTM D-2321. HDPE pipe bedding shall comply with Subsection 603.4. The PVC pipe bedding shall be placed in two lifts. The first lift will be from the bottom of the trench to the spring line of the pipe. The second lift will be from the spring line to one foot above the top of pipe. Separate inspections will be required on each lift. The Contractor shall place the first lift in a manner that will insure uniform support under the haunches and proper alignment of the pipe.

615.4 FITTINGS:

All fittings shall conform to the requirements of the pipe specifications and shall be located as shown on the plans, or as directed by the Engineer, in accordance with the standard details.

615.5 JOINTING:

Prior to making pipe joints, all surfaces of the portions of the pipes to be joined shall be cleaned, dried, and prepared in accordance with the manufacturer's recommendations. The joints shall then be carefully centered and completed.

Trenches shall be kept water-free during the installation of joints and couplings.

The joint and coupling materials will be as specified in the appropriate pipe sections and shall be installed in accordance with the manufacturer's recommendations. Cement mortar joints will NOT be permitted in sanitary sewer construction.

615.6 SANITARY SEWER SERVICE TAPS:

When the construction of sanitary sewer service taps are called for in the special provisions, they shall be constructed in accordance with standard details for sewer taps except for HDPE pipe.

To maintain structural integrity of the pipe, service taps for HDPE Profile-Wall pipe shall be constructed in accordance with the manufacturer's recommendations.

When any damage occurs to the pipe ribs or walls, outside of the tap area, the Contractor shall perform repairs, as recommended by the manufacturer at no cost to the Contracting Agency. Damage to the pipe will include but not be limited to gouging, marring, and scratching forming a clear depression in the pipe.

The location of the service tap for each property shall be in the downstream ⅓ of the lot, or as requested by the property owner. Sewer service taps shall not be covered until they have been plugged and marked in accordance with standard details and their location has been recorded by the Engineer.

615.7 SANITARY SEWER CLEANOUTS:

The cleanouts shall be constructed at locations shown on the plans, in accordance with the standard details for cleanouts.

615.8 MANHOLES:

Manholes shall be constructed to conform with the requirements of Sections 625, Section 505 and standard details.

615.9 BACKFILLING:

Backfilling and compaction shall be done in accordance with Sections 601 and 603, for HDPE pipe.

615.10 TESTING:

Pressure testing of force mains shall be done in accordance with Section 610.14.

Sewers and pipe lines shall be subject to acceptance testing after backfilling has been completed but prior to the placement of the finished surface material.

The Contracting Agency reserves the right to require testing of the entire installation. Cost of repairs or corrections necessary to conform to the following testing requirements will be borne by the Contractor at no additional cost to the Contracting Agency.

(A) Low Pressure Air Test:

Testing will be accomplished by the means of "Low Pressure Air Testing." Tests may be conducted by the Contractor or an independent testing firm. However, acceptance tests shall be made only in the presence of the Engineer.

Test Procedure:

1. Before testing, the pipe shall be thoroughly cleaned.

2. The Contractor shall seal off the section of pipe to be tested at each manhole connection. Test plugs *must be securely braced* within the manholes.

3. A minimum of two connecting hoses to link the air inlet test plug with an above ground test monitoring panel must be provided.

    a. One hose is to induce air through the test plug and into the test chamber.

    b. The second hose is for the purpose of monitoring the test pressure from within the enclosed pipe.

4. UNDER NO CIRCUMSTANCES ARE WORKERS TO BE ALLOWED IN THE CONNECTING MANHOLES WHILE A PRESSURE TEST IS BEING CONDUCTED.

5. Add air slowly into the test section. After an internal pressure of 4.0 psi is obtained, allow internal air temperature to stabilize.

6. After stabilization period, adjust the internal air pressure to 3.5 psi, disconnect the air supply and begin timing the test.

7. Refer to Table 615-1 to determine the length of time (minutes) the section under test must sustain while not losing in excess of 1 psi as monitored by the test gauge. If the section of line to be tested includes more than one pipe size, calculate the test time for each size and add the test times to arrive at the total test time for the section.

8. Sections so determined to have lost 1 psi or less during the test period will have passed the leakage test. Those sections losing in excess of 1 psi during the test period will have failed the leakage test.

9. Appropriate repairs must then be completed and the line retested for acceptance.

TABLE 615-1

SANITARY SEWER AIR TEST

Minimum Test Time for Various Pipe Sizes*

Nominal Pipe Size, in.	*T* (time), min/100 ft.	Nominal Pipe Size, in.	*T* (time), min/100 ft.
3	0.2	21	3.0
4	0.3	24	3.6
6	0.7	27	4.2
8	1.2	30	4.8
10	1.5	33	5.4
12	1.8	36	6.0
15	2.1	39	6.6
18	2.4	42	7.3

* The time has been established using the formulas contained in ASTM C-828, Appendix.

(B) Hydrostatic Test:

Exfiltration Testing (water):

Sanitary sewer testing by means of exfiltration should only be considered when low pressure air testing cannot be used and only with the approval of the Engineer.

Testing Procedure:

1. The Contractor shall furnish all equipment for testing.

2. Seal off the downstream end of the line and fill with water to a minimum head of 4 feet in a stand pipe at the high end.

3. A period of at least one hour will be allowed for absorption time before making the test.

4. A suitable meter or method of measuring the quantity of water used is necessary.

5. The allowable water loss for sanitary sewers shall not exceed 0.5 gallons per hour per 100 feet of pipe per inch of diameter of pipe under a minimum test head of 4 feet above the top of the pipe at the upper end.

(C) Deflection Test for HDPE and PVC Pipe:

In addition to the tests prescribed above, the Contractor shall perform a deflection test on the system as directed by the Engineer. Any part of the installation which shows deflection in excess of 5% of the average inside diameter as per ASTM F894 for HDPE pipe and per ASTM D-3034 for PVC pipe, shall be corrected.

After acceptance but prior to the termination of the warranty period, the Contracting Agency may test the long term deflection of the sewer. If the Contracting Agency determines that the deflection has exceeded 7½% of the average inside diameter, that portion of the installation shall be corrected by the Contractor at no cost to the Contracting Agency.

(D) Closed Circuit T.V. Inspection:

The Contracting Agency reserves the right to visually inspect the interior of the sewer line using a television camera. Any defects in the pipe or construction methods revealed shall be corrected by the Contractor at no additional cost to the Contracting Agency.

The Contracting Agency will pay for the initial T.V. inspection. Any additional inspection(s) required, due to the failure of the initial inspection, shall be paid for by the Contractor.

615.11 PAVEMENT AND SURFACING REPLACEMENT:

Pavement and surfacing replacement shall be done in accordance with Section 336.

615.12 CLEANUP:

The Engineer has the right to close down forward trenching and pipe laying where testing, backfill, compaction and cleanup does not follow in an orderly manner.

615.13 MEASUREMENT AND PAYMENT:

(A) Sewer Pipe and Fittings: (Vitrified clay, cast iron and other approved types of pipe.)

Measurement will be made horizontally through manholes and fittings and from centerline to centerline of structures, for the various types and sizes of pipe called for on the plans and in the proposal.

Payment for the various sizes and types of pipe will be made at the unit price bid per linear foot, and shall be compensation in full for furnishing and installing the pipe and fittings complete in place, as specified, including excavation, removal of obstructions, backfilling, water settling, compaction, sheeting and bracing, testing, and all incidental work not specifically covered in other pay items.

(B) Sanitary Sewer Service Taps:

Measurement will be the number of taps installed.

Payment will be made at the unit price bid and shall be compensation in full for furnishing and installing pipe and fittings complete in place, as specified and called for on the plans and standard details, including all cost of excavation, removal of obstructions, shoring and bracing, backfilling, compaction, pavement replacement, maintenance of traffic, and all work incidental thereto.

(C) Sanitary Sewer Cleanouts:

Measurement will be the number of cleanouts installed.

Payment will be made at the unit price bid and shall be compensation in full for furnishing and installing pipe, fittings, and frame and cover as called for on the plans and in accordance with the standard details.

End of Section

SECTION 616

RECLAIMED WATER LINE CONSTRUCTION

616.1 GENERAL:

This specification prescribes standards for reclaimed water mains for the purpose of conveying, under pressure, properly treated wastewater effluent for permitted reuse. Installation of reclaimed water mains shall be in accordance with these specifications for materials, trenching, bedding, backfill, pressure and leakage testing, except as modified herein.

616.2 MATERIALS:

Pipe materials shall be in accordance with Subsection 610.3, Materials. Pipe material may be Section 755, Polyethylene Pipe for Water Distribution, when approved by the Agency. Polyethylene pipe shall be an integrally colored pipe as specified by the Agency.

Fittings shall be cast or ductile iron as specified in Section 750, Iron Water Pipe and Fittings.

Valves shall be in accordance with Sections 610 and 630.

Riser pipes, centered over valve operator nuts, shall be painted red, both inside and outside.

Fire hydrants connected to reclaimed water lines shall be painted aluminum in color with the top three inches of the barrel painted gloss black.

616.3 MARKING TAPE:

Pipe marking tape shall be a minimum 4.0 mils thick, inert polyethylene plastic that is impervious to all known alkalis, acids, chemical reagents and solvents likely to be encountered in the soil. For pipe diameters 24 inches or less, the tape width shall be equal to or greater than the diameter of the pipe. For pipe diameters larger than 24 inches, the tape width shall be 24 inches. Marking tape shall be solid red in color with the following message printed thereon: "CAUTION NON-POTABLE WATER LINE." The tape message shall be imprinted continuously over the entire length in permanent black lettering with the message spacing not to exceed 18 inches. The lettering shall be a minimum 1½ inches high. The spacing between the individual words of the message shall not exceed three inches.

616.4 LOCATOR TAPE:

Detectable pipe locating tape shall be a minimum 4.0 mils thick, inert polyethylene plastic that is impervious to all known alkalis, acids, chemical reagents and solvents likely to be encountered in the soil, with a minimum ⅓ mil thick metallic foil or two embedded copper wires. The tape shall be a minimum three inches in width. Locating tape shall be solid red, printed in the same manner of the marking tape specified in the paragraph above.

616.5 PIPE INSTALLATION:

Pipe shall be installed in accordance with Sections 601 and 610.

When reclaimed water mains are adjacent to potable water mains or building water connections, the reclaimed water main shall comply with standard separation requirements as specified for sanitary sewer mains. When reclaimed water mains are adjacent to sanitary sewers or building sewer drains, the reclaimed water main shall comply with standard separation requirements as specified for potable water mains.

Marking tape shall be installed on all reclaimed water pipe lines. The tape shall be laid directly on top of the pipe along the pipe centerline and shall be securely affixed by wrapping the pipe circumference with adhesive tape at no greater than 4 foot intervals along the pipe line.

Detectable pipe locating tape shall be installed over all reclaimed water mains. Locating tape shall be buried 24 inches below the surface over the center of the pipe. The backfill shall be sufficiently leveled so that the tape is installed on a flat surface. The tape shall be centered in the trench with the printed side up. Care shall be exercised to avoid displacement of tape and to ensure its integrity.

616.6 TESTING:

Final flushing and microbiological testing as specified in Subsection 611.15 shall not be required. Testing, preliminary flushing, and disinfection shall be as specified in Sections 610 and 611.

End of Section

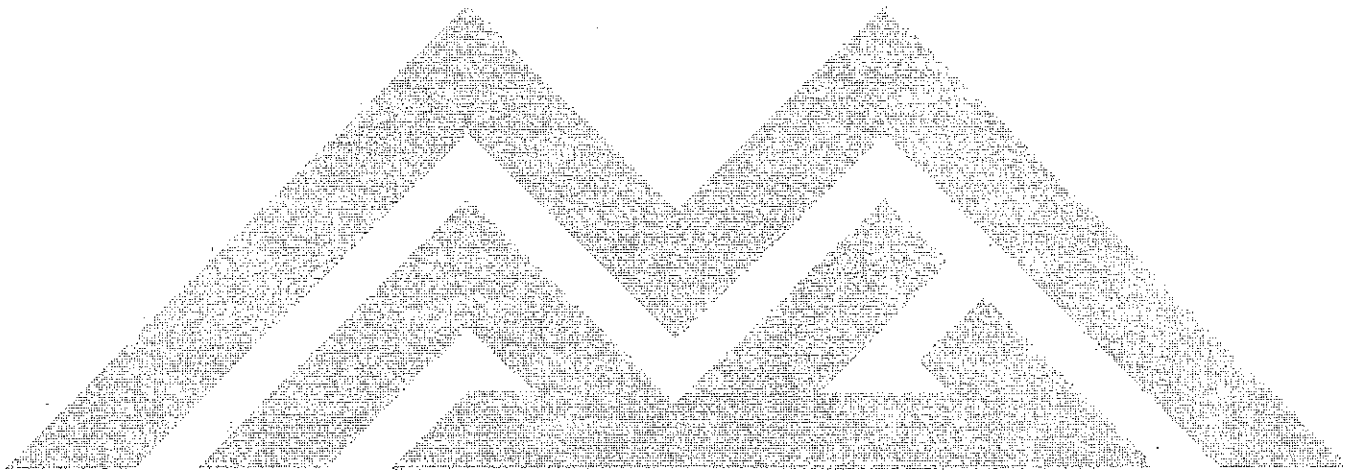

SECTION 618

STORM DRAIN CONSTRUCTION

618.1 DESCRIPTION:

This section covers concrete pipe line and high density polyethylene (HDPE) pipe line construction used for the conveyance of irrigation water and storm drainage in streets, easements, and alley right of ways, under low hydrostatic heads.

Installation of pipe in laterals of Salt River Valley Water Users' Association or other irrigation districts shall conform to the specifications and permit of the respective irrigation district.

Installation of pipe in State Highways shall conform to the specifications and permit of the Arizona Department of Transportation.

618.2 MATERIALS:

The concrete pipe and HDPE pipe, specials, joints, gaskets, and testing shall be according to Sections 620 or 735, 736 and 738, except as specified below or as modified by special provisions.
(A) Specials: Pipe specials such as closure pieces, wyes, tees, bends, and manhole shafts shall be provided as indicated on the plans, and such specials shall be made equal in strength, diameter, and other physical characteristics to the standard straight pipe lengths by the use of extra concrete, extra reinforcing, or steel items. Drawings of specials shall be submitted to the Engineer for approval before their fabrication.

(B) Rubber Gasket Joints: When rubber gasket pipe is used, the joint shall be sealed with a continuous ring gasket made of a special composition rubber of such size and cross section as to fill completely the recess provided for it. The gasket shall be the sole element depended upon to make the joint watertight, and shall have smooth surfaces, free from pits, blisters, porosity, and other imperfections. The rubber compound shall contain not less than 60% by volume of first grade synthetic rubber.

The remainder of the compound shall consist of pulverized fillers free from rubber substitutes, reclaimed rubber and deleterious substances. The compound shall meet the following physical requirements when tested in accordance with appropriate ASTM Specifications:

(1) Tensile Strength of the compound shall be at least 2,100 psi ASTM D-412.

(2) Elongation at Rupture shall be at least 400%, ASTM D-412.

(3) Shore Durometer Hardness, Type A, Value 40 - 60(±5), ASTM D-2240.

(4) Cold Flow: The percentage shall not exceed 20. The determination shall be made in accordance with Method B ASTM D-395, with the following exception. The disc shall be ½" thick and the diameter shall be that of the rubber gasket. The gaskets shall not be exposed to direct sunlight for a time greater than needed to accomplish normal installation.

(5) Specific Gravity shall be consistent within +0.05 and shall be between 0.95 and 1.45. ASTM D-297.

(6) Rubber Gaskets for HDPE pipe shall be in accordance with Subsection 738.2.3.

(C) Cement Mortar Joints for R.C.P. will be in accordance with Subsection 736.3.

618.3 CONSTRUCTION METHODS:

Excavation, bedding, backfilling, and compaction or consolidation of backfill and bedding of trenches shall be accomplished in accordance with Sections 601 and 603 for HDPE pipe, except as specified below, or as modified by special provisions.

The Contractor shall over-excavate the trench and fill with select materials in accordance with standard details.

Where the cover over the top of the pipe is less than 10 feet, the maximum trench width is unrestricted. The pay width, however, for pavement replacement shall remain in accordance with Section 336. For pipe, with 10 feet or more cover, the maximum trench width shall be as required by Sections 601 and 603 for HDPE pipe.

The laying of the pipe shall be in finished trenches free from water or debris, and shall be commenced at the lowest point, with the spigot ends pointing in the direction of the flow. Each pipe shall be laid firmly and true to line and grade, in such manner as to form a close concentric joint with the adjoining pipe and to prevent sudden off-sets of the flowline. Any adjustment to line and grade shall be made by scraping away or filling in under the body of the pipe, never by wedging or blocking under the pipe ends.

Variation from prescribed alignment and grade shall not exceed 0.10 foot and the rate of departure from or return to established grade or alignment shall be no more than 1 inch in 10 feet of pipe line unless otherwise approved by the Engineer. For closures and deflection angles greater than 10 degrees, joints shall be made by use of a bend, specially manufactured fitting, or by a concrete collar, per standard details.

Pipe shall be of the type, class and size shown on the plans or in the special provisions.

All pipe, for permit construction, shall be reinforced concrete pipe, ASTM C-76 Class III or HDPE pipe in accordance with ASTM F894. For reinforced concrete pipe, the minimum cover from the top of the pipe to the finished grade shall be 2 feet and the maximum cover shall be 12 feet. The minimum and maximum cover for HDPE pipe shall be as specified in the special provisions or the manufacturer's recommendations.

All pipes installed under railroad tracks shall be reinforced concrete pipe, ASTM C-76, Class V and the minimum cover over all pipes shall be as specified in the railroad permit and/or special provisions. Bedding shall be in accordance with standard details.

The allowable water loss for irrigation lines shall not exceed 2 gallons per hour per 100 feet of pipe per inch of diameter of pipe, under a minimum test head of 1 foot above the top of the pipe at the upper end when tested in accordance with the procedures of Section 615.

618.4 JACKING PIPE:

At locations where jacking is required, the storm drain line shall be installed by jacking to the lengths indicated on the plans, in accordance with the following. The methods and equipment used in jacking reinforced concrete pipe conduit shall be optional with the Contractor, provided that the proposed method is first approved in writing by the Engineer. Such approval, however, shall in no way relieve the Contractor of the responsibility for damages of any nature which might occur as a result of the methods used.

Only workmen experienced in the operation of jacking concrete conduit shall be used.

The driving ends of the conduit shall be properly protected and the conduit shall be driven true to alignment and grade. The deviation from true line and grade at any single point within the jacked portion shall be limited to 0.5 feet horizontal deviation from line and ±0.2 feet vertical deviation from grade.

Any section of conduit which may show signs of failure shall be removed and replaced with a new section of precast conduit or with a cast-in-place section, which in the opinion of the Engineer is adequate to carry the loads imposed upon it. In this respect it shall be understood that where pipe is specified on the drawings to be jacked into place the jacked pipe shall be reinforced concrete of the strength specified in these specifications and the design of such pipe is based upon superimposed loads and not upon loads which may be placed upon the pipe as a result of jacking operation. Any increase in pipe strength required in order to withstand jacking loads shall be the responsibility of the Contractor. The reinforcing shall be circular and of either single or double cage design.

Spacer blocks shall be placed in the inside circular space which will allow sufficient width for point mortaring when jacking is completed and to equalize pressures during jacking. Three grout holes per 8-foot section of pipe shall be made during manufacturing.

Double rubber gaskets and band type joints shall be provided for 36 inch diameter and larger pipe.

One hole shall be made on the top midway between the ends. Two additional holes, each approximately 1.5 feet from each end and approximately midway between the springline and top on opposite sides shall be made.

Where the nature of the soil, or the structure under which the conduit is being jacked is such that, there is increased danger of a cave-in or damage to said structure, the method of jacking the conduit shall be as specified below.
The leading section of conduit shall be equipped with a jacking head securely anchored thereto to prevent any wobble or alignment variation during jacking operations. The length and details of the jacking head shall be subject to the written approval of the Engineer. Excavation shall be carried out entirely within the jacking head and no excavation in advance thereof will be permitted. Every effort shall be made to avoid any loss of earth outside of the jacking head. Excavated material shall be removed from the conduit as excavation progresses, and no accumulation of such material within the conduit will be permitted. Upon completion of the jacking operations, all voids around the outside face of the conduit shall be filled by grouting through each of the previously constructed grout holes to the satisfaction of the Engineer. The grout shall be a mixture of one part cement to three parts sand and a mixture by volume.

Grouting equipment and material shall be on the job before jacking operations are started in order that grouting around the jacked conduit may be started immediately after the jacking operation. After grouting, the holes in the conduit shall be repaired to the satisfaction of the Engineer.

618.5 MEASUREMENT:

(A) Mail Line Pipe: Shall be the number of linear feet of pipe laid as measured along the pipe axis.

Unless hereinafter modified, measurement shall extend through manholes when no change in pipe size occurs. When a change in pipe size occurs within a manhole, unless hereinafter modified, measurement for each size will be taken to the centerline of the manhole.

(B) Connecting Pipe: Shall be the number of linear feet of pipe installed, as measured along the pipe axis from a main line pipe, or a manhole, or a catch basin to a catch basin, or a plugged end, and shall include the portions of the connecting pipe embedded in the above structures.

(C) Jacked Pipe: Shall be made at the ground surface and shall be the number of linear feet of ground surface undisturbed by the cut and cover construction on either side of the jacked section.

618.6 PAYMENT:

(A) Main Line Pipe: Will be paid at the unit price bid per linear foot, to the nearest foot, for each size and type of pipe and shall be compensation in full for furnishing and installing the type of pipe as specified and as shown on the plans including removal of obstructions, excavation, bedding, backfilling, compacting, testing, joint materials, joining, collars, and field closures.

(B) Connecting Pipe: Will be paid at the unit price bid per linear foot, to the nearest foot for each size of pipe and shall be compensation in full for furnishing and installing complete in place as shown on the plans and as specified, the connecting pipe and specials including spur connections, removal of obstructions, excavation, bedding, backfilling, compacting, joint materials, joining, collars, field closures, and testing.

(C) Jacked Pipe: Will be paid the same as for main line pipe.

End of Section

SECTION 620

CAST-IN-PLACE CONCRETE PIPE

620.1 GENERAL:

This specification covers cast-in-place non-reinforced concrete pipe intended for use as storm sewers or irrigation lines. The abbreviated title is CIPP. CIPP is conduit made of portland cement concrete cast monolithically in a properly prepared trench, using equipment specifically designed for this purpose. The type of equipment to be used by the Contractor must be approved by the Engineer and the Contractor may be required to furnish evidence of the successful use of this equipment on prior work. CIPP will be placed only:

(A) By experienced operators. The Engineer will be the sole judge as to experience level.

(B) In the presence of the Engineer.

(C) In ground capable of standing unsupported from the bottom of the trench to the top of the pipe without sloughing.

(D) In fill when it can be demonstrated to the satisfaction of the Engineer that the fill will adequately support the pipe.

620.2 MATERIALS:

620.2.1 Cement shall be ASTM C-150, Type II, low alkali as per Section 725.

620.2.2 Sand aggregate used for concrete and mortar shall conform to Section 701. Maximum size of the aggregate shall not be greater than ⅓ of the minimum wall thickness up to and including a wall thickness of 4½-inches (114 mm). The maximum aggregate size is 1½-inches (38 mm).

620.2.3 Water used for concrete and for curing the pipe shall be as per Section 725.

620.2.4 Concrete shall be Class A in accordance with Section 725. Slump shall be the minimum required for satisfactory placement of the concrete by the equipment used by the Contractor. The slump shall not exceed 3-inches (75 mm).

620.2.5 Bonding mortar shall consist of two (2) or more parts of cement to three (3) parts of sand by volume.

620.3 CONSTRUCTION METHODS:

620.3.1 Excavation: The trench will be neatly excavated with vertical sides and semi-circular bottom. The trench shall be shaped to form the bottom outside of the pipe on the alignment and to the grades specified in the plans. Departure from and return to established grade shall not exceed 1-inch per 10 linear feet (25 mm per 3 m) with a maximum allowable departure of 1½-inches (40 mm). Departure from and return to specified alignment shall not exceed 2-inches per 10 linear feet (50 mm per 3 m) with a maximum allowable alignment departure of 4-inches. The bottom of the trench, hereinafter known as the trench form, will be shaped to provide full, firm, and uniform support by undisturbed earth or compacted fill for at least the bottom 210 degrees of the pipe. Density of the fill shall be at least five percent (5%) greater than the natural inplace soil, but in no case less than 85 percent (85%) when tested in accordance with AASHTO T-99, Method A and T-191 or ASTM D-2922 and D-3017.

When it is necessary to install the pipe in rocky areas, the rock will be removed and replaced with suitable fill material compacted to proper density. The rock will be over-excavated to leave a 6-inch (150 mm) minimum compacted soil cushion between the rock and the pipe. For construction accuracy, areas left void by rock removal will be completely filled with compacted material, then trenched for the pipe as though natural ground. If the rock below the pipe subgrade is fractured or fragmented or if it consists of large cobblestones or boulders, the replacement fill material will be carefully selected to insure that it is of such gradation that it will not be removed downward by fluctuation of the water table. In no case will expansive soils be used for fill. A similar procedure of over-excavation, backfill, compaction, and retrenching will be used where sloughing sand or where soft or spongy soil conditions are encountered. When expansive clays are encountered, they will be thoroughly moistened by ponding, to completely expand the soil, and the moisture maintained until the concrete is placed.

Where the pipe is to be constructed through fill materials, such fill shall have stability in the zone of the trench form equal to firm undisturbed earth, in the area adjacent to the fill.

Upon direction of the Engineer, the Contractor shall substitute RCP or an acceptable alternate at locations where the conditions are unsuitable for CIPP. All cost for this substitution shall be borne by the Contractor.

620.3.2 Placement: At the time of concrete placement, all soil in the trench will be adequately moistened so that water is not drawn from the freshly placed concrete. However, the trench form will be completely free of water, mud, and debris. All forming devices, including the slipforms and hopper of the placement device, shall be thoroughly moistened.

Concrete shall not be placed when temperature of the concrete exceeds 90 degrees Fahrenheit (32 Celsius) or is less than 50 degrees Fahrenheit (10 Celsius). The soil adjacent to the trench shall be at a temperature above freezing.

The pipe shall be constructed in one placement, the entire cross-section being placed monolithically. Inside forms shall be sufficiently rigid to withstand consolidation of the fresh concrete. Placement shall be such as to produce a thoroughly consolidated homogeneous concrete mixture conforming to the test requirements of this specification. Effective consolidation means shall be applied to the fresh concrete over the entire circumference and from within the pipe shell. Consolidation means shall be capable of effectively placing and consolidating fresh concrete at production speeds. Methods of consolidating shall be capable of building up sufficient pressure to effectively bond the concrete to the surrounding earth and to keep loose sand, mud, and water out of the pipe shell.

(A) Construction Joints:

When work is stopped at the end of a placement or for any period that would permit initial set to take place, a construction joint shall be formed. The ends of the pipe that are to be in butt contact shall be left in rough condition with a slope of approximately 45 degrees. Before resuming, if the pipe diameter is 60-inches (1.5 m) or less, an excavation shall be made along the sides and bottom of the joint to permit casting of a concrete collar around the outside of the joint. This collar shall have a minimum thickness of 1¼ times the wall thickness of the pipe and shall lap the entire joint by at least two (2) times the wall thickness. Immediately before resuming concrete placement the surfaces to be bonded shall be cleaned of all laitance, coatings, foreign materials, and loose or defective concrete, thoroughly wetted and coated with a layer of bonding mortar (Subsection 620.2.5) approximately ¼-inch (6 mm) thick. In lieu of the bonding mortar, neat cement paste may be thoroughly scrubbed onto the wet surface of the previously placed concrete.

For a joint that may be used for connections to another pipe or structure, a joint shall be made by squaring off the end of the pipe. An excavation shall be made along the sides and bottom of the cast-in-place pipe, for any diameter, to permit casting of a concrete collar as described above.

The outside top of all joints shall be capped for the entire width of the pipe that is exposed, that is, between the earth walls of the excavated trench. This cap shall have a minimum thickness equal to the wall thickness of the pipe and shall lap the joint, both upstream and downstream from the joint by at least twice the wall thickness of the pipe. A cap as described is required regardless of pipe size.

(B) Pipe Dimensions and Tolerances:

(1) The internal diameter of the pipe at any point shall not be less than 95 percent of the nominal diameter, and the average of any four (4) measurements of the internal diameter made at 45 degree intervals shall not be less than the nominal diameter.

(2) For pipe less than 15-inches (381 mm) inside diameter, the minimum wall thickness shall be 2-inches (50 mm).

For pipe with an inside diameter of 15-inches (381 mm) to 24-inches (610 mm) the minimum wall thickness shall be 2½-inches (63 mm). For pipe exceeding 24-inches (610 mm) inside diameter, the minimum wall thickness shall be 1/12 of the inside diameter, plus ½-inch (13 mm).

(3) Offsets at form laps and horizontal edges shall not exceed ½-inch (13 mm) for pipe having inside diameter not greater than 42-inches (approximately 1 m); ¾-inch (19 mm) for pipe having inside diameter greater than 42-inches, but not greater than 72-inches (approximately 2 m); and 1-inch (25 mm) for pipe having inside diameter greater than 72-inches (1.8 m).

620.3.3 Curing and Backfilling: The Contractor shall be responsible for proper curing of the concrete and backfilling the trench to an even grade. Final backfill and compaction shall not be started until concrete has developed a compressive strength of at least 2,000 psi (13.8 MPa). Curing shall be performed in such a manner as to prevent the premature drying of the concrete. The Contractor shall use one of the four methods described below.

(A) A 3-inch (75 mm) layer of moist loose soil or sand shall be carefully placed over the top of the pipe immediately after the pipe is cast. The backfill shall be material free of clods and rocks having a diameter greater than 2-inches (50 mm) and any other deleterious foreign materials. The backfill shall be carefully placed over the top of the pipe to prevent damage to the wet concrete. The thickness of the backfill shall be increased by 9-inches (228 mm) after initial set of the concrete has occurred. The backfill shall be kept moist at all times until the pipe has been covered to a depth of 12-inches (305 mm) or more.

(B) The exposed top portion of the pipe may be covered with wet burlap or other material of high moisture retentive properties immediately after the pipe is cast. The covering material shall be kept continuously moist until the placement of final backfill as described above. Moisture retentive material may be removed or left in place at the option of the Contractor.

(C) A pigmented membrane-curing compound conforming to ASTM C-309 may be applied to the exposed surface immediately after the pipe is cast. The compound shall be applied at the rate of not less than one (1) gallon for each 150 square feet (1 litre for each 3.7 square m) of exposed concrete. The pipe shall then be covered with a minimum of 3-inches (75 mm) of moist loose soil when the curing compound is sufficiently hard to resist damage from the fill. Final backfill shall be placed when the pipe attains suitable strength.

(D) Polyethylene film complying with ASTM C-171, nominal thickness 0.0015-inches (0.038 mm), may be placed on the exposed top surface of the pipe immediately after the pipe is cast. The film shall be anchored in place with loose soil to assure continuous, adequate curing. The trench shall be completely backfilled as soon as the pipe attains suitable strength.

A humid atmosphere within the pipe, as evidenced by condensation on the interior surface, shall be maintained for at least seven (7) days following placement, except for a maximum period of 48-hours allowed for removing forms and making repairs. To prevent air drafts which may dry the pipe and to maintain a humid atmosphere inside the pipe, all openings into the pipe line shall be kept closed or covered, except when and where work is actually in progress on the inside of the pipe. If necessary to promote high humidity, the pipe line will be partially filled with ponded water during the curing period.

620.3.4 Repair: Care shall be taken when removing the forms that the pipe is not damaged. Immediately after the removal of the forms, the inside of the pipe shall be inspected and all required repairs made before final backfilling begins. All spalls, cracks or indentations not satisfying Subsection 620.3.2(A) shall be filled with mortar per Subsection 620.2.5. Cracks may be repaired with epoxy materials.

Longitudinal cracks exceeding 0.01 inches (0.25 mm) in width and 12-inches (305 mm) in length shall be cause for rejection of the pipe. The pipe section or reach in question shall either be removed and replaced or shall be repaired in a manner approved by the Engineer.

620.3.5 Finish: Except for the form offsets the interior surface of the pipe shall be equivalent to or better than a wood float finish. All extraneous concrete shall be removed from the interior surface.

620.4 METHODS OF TESTS:

Wall thickness shall be checked at the top, sides and bottom, every 100 feet (30 M). Where thickness is not determined by probes through the fresh concrete, small holes shall be drilled a day or so after placement. The holes shall be properly and permanently closed and sealed, flush with the inside surface of the pipe, after measurements are made.

Test cylinders shall be prepared and tested as per Section 725. If the cylinder tests indicate that the concrete does not meet the specified strength requirements, cores shall be taken from the same section of concrete represented by the faulty test cylinder under the supervision of the Engineer. The concrete should be at least 14 days old before the core specimens are taken. The diameter of the core specimens for the determination of compressive strength should be at least three (3) times the maximum nominal size of the coarse aggregate used and must be at least twice the maximum nominal size of coarse aggregate.

The length of the specimen, when capped, should be twice the core diameter. A core having a maximum height of less than 95 percent of its diameter before capping or a height less than its diameter after capping shall not be tested.

If cores are taken, the Contractor shall patch all core holes in such a manner that the patch will be permanent, will not leak, and will have a smooth interior finish flush with the interior surface of the pipe.

Procedures and payment for coring shall be in accordance with applicable portions of Section 725.

The Engineer will evaluate the test results and his decision as to required corrective action will be final.

620.5 MEASUREMENT:

Measurement of cast-in-place concrete pipe will be the number of linear feet of pipe measured horizontally along the pipe axis from end to end of the pipe. At changes in diameter, the measurement shall be to center of manhole or transition.

620.6 PAYMENT:

Payment will be made at the contract unit price bid per linear foot to the nearest foot for each size of pipe and shall be compensation in full for furnishing and installing the cast-in-place concrete pipe as specified, including removal of obstructions, excavation, backfilling, compacting, testing, and all incidental costs not specifically covered in other items in the proposal.

End of Section

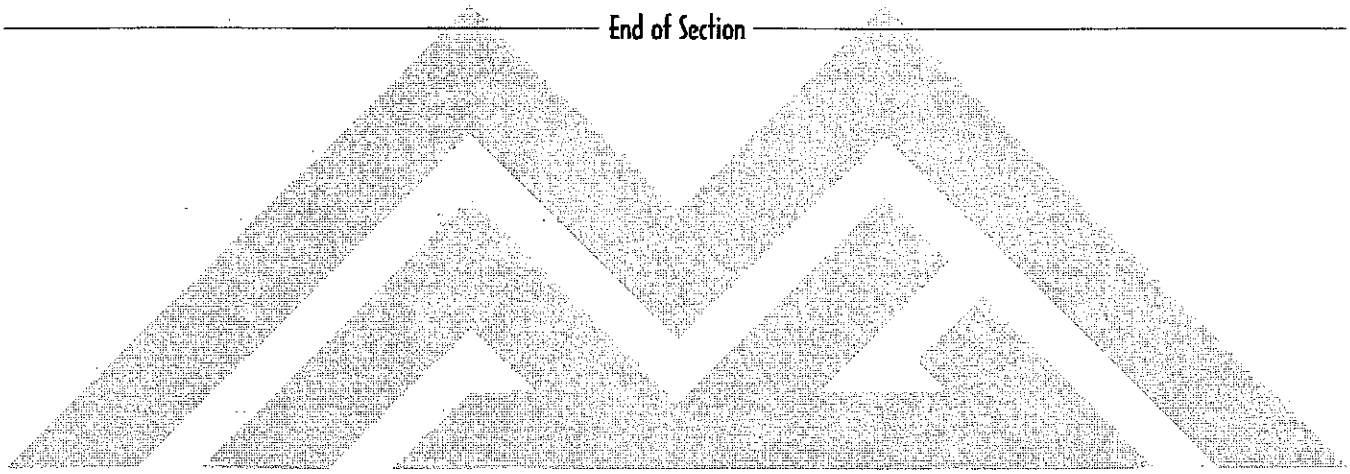

SECTION 621

CORRUGATED METAL PIPE AND ARCHES

621.1 DESCRIPTION:

These specifications cover plain galvanized, bituminous coated, and bituminous coated and paved galvanized corrugated metal pipe for use in storm sewers. The pipe shall be of the types, constructed as specified, and shall be manufactured in accordance with the requirements of the stated specifications. Except as otherwise required, corrugated metal pipe shall conform to AASHTO M-36 for Type I, Type IA, II and Type IIA. The external coating and internal lining shall be in accordance with AASHTO M-190 and Section 760.

621.2 MATERIALS:

The types of pipe and fabrication shall be in accordance with Section 760.

All helically-wound corrugated metal pipe shall have a marking system which shall provide a quick external visual check of diameter variations during and after the manufacturing process.

621.3 INSTALLATION:

Excavation, bedding and backfill shall be in accordance with Section 601, except as modified by standard details.

No pipe shall be laid except in the presence of an inspector. Each pipe shall be carefully inspected immediately before it is laid and defective pipe will be rejected. Pipe lines shall be laid to the grades and alignment indicated on the drawings. Variation from prescribed grade and alignment shall not exceed 0.10 foot, and the rate of departure from, or return to established grade or alignment shall be no more than 1 inch in 10 feet, unless otherwise approved by the Engineer. Proper facilities shall be provided for lowering sections of pipe into trenches. All pipes, elliptical or round, as well as pipe arches requiring external coating or internal lining shall be equipped with lifting lugs as required and shall have connecting bands designed to provide positive connection without damaging the coating on the pipe or pipe arch.

All field repairs to the bituminous coating or paving shall be made with approved fiber reinforced bituminous mastic.

Corrugated metal pipe and/or pipe arches shall be laid with separate section joined together in such a manner that the joint space shall not exceed ½ inch, with the outside laps of circumferential joints pointing upstream and with longitudinal laps on the side. Elliptical pipe shall be installed so that the major or minor axis, whichever the case may be, and which should be indicated by suitable markings on the top of each end of the pipe sections, coincides with the survey alignment of the trench excavation. Any metal in the joints which is not thoroughly protected shall be coated with bituminous mastic. During the installation, the pipe shall be handled with care so as not to damage the external coating or internal lining. Coupling band bolts and damaged areas of the coupling bands and pipe shall be given a coating of bituminous mastic as specified above prior to placing the backfill. As determined by the Engineer, pipe that is damaged to such an extent that satisfactory field repairs cannot be made shall be removed and replaced at no additional cost to the Contracting Agency.

621.3.1 Joints: Before the connecting band is placed around the pipe, the ends of the pipe that will be beneath the band, shall be coated with bituminous mastic or, if of suitable design, fitted with circular rubber gaskets to provide a watertight joint. The band shall be tightened evenly, keeping equal tension on the bolts. If mastic is used, tension shall be maintained over an interval of time until the flow of mastic terminates. The joint shall remain uncovered over a period designated by the Engineer, and before covering the joint the nuts shall be tested for tightness. If the nut has a tendency to loosen its grip on the bolt, it shall be tightened again and remain uncovered until a tight, permanent joint can be obtained. Prior to backfilling around the joint, the bolts, lugs, and nuts shall be given a coating of bituminous mastic. The annular space between abutting pipe sections shall be filled with bituminous mastic after jointing.

621.3.2 Pipe Elongation: Except as otherwise specified, the standard details shall control as to conditions under which pipe must be elongated. Pipe shall be elongated 5 ± ½ percent of the nominal diameter to take advantage of the buildup of side support as it settles back toward a full round shape under the backfill load. The method or technique for obtaining and releasing the elongation shall be optional to the Contractor. Under no circumstances shall the vertical diameter of the pipe at any point along the pipe section, after backfill and compaction is completed, be less than the nominal diameter of the pipe, or more than 5 percent greater than the nominal diameter of the pipe as shown on the plans or specified elsewhere in this specification. Any damage done as a result of strutting shall be repaired as directed by the Engineer at no additional cost to the Contracting Agency. Strutting of pipe shall be approved by the Engineer.

621.3.3 Cutting: The Contractor will be prohibited from using conventional welding torches in cutting full lined CMP due to fire hazard. Pipe will either be sawcut or cut with special cutting tools which will not expose the pipe to the fire hazard of a normal acetylene torch. Whenever possible, connections shall be shop fabricated to prevent any exposure to fire hazard.

621.3.4 Repair of Damage to Coatings: Corrugated metal pipe shall be carefully handled at all times to prevent damage to the external coating, spelter coating, or internal lining. Each length of pipe shall be carefully inspected immediately prior to placing in the trench to ascertain that no damage has been done to the exterior coating that will be concealed when the pipe is placed. Any damage to the spelter coating, shall be repaired to the satisfaction of the Engineer in accordance with Section 771. Any damage to the external coating or internal lining shall be repaired to the satisfaction of the Engineer with bituminous mastic as specified above.

621.4 TEST SPECIMENS:

All tests on the bituminous coating shall be made on samples secured from pipe delivered to or about to be delivered to the Contractor, or from the coating and lining facility of the pipe fabricator at the time the pipe is being coated.

Compliance with these specifications as set forth, shall be the responsibility of the Contractor. Three certified copies of test results indicating compliance shall be furnished for each lot or shipment prior to delivery of the material to the Contractor.

621.5 MEASUREMENT:

Measurement of corrugated metal pipe will be the number of linear feet of pipe, measured horizontally, from end to end of the pipe through manholes and specials. At changes in diameter the measurement will be to center of manhole or special.

621.6 PAYMENT:

Payment will be made at the contract unit price bid per linear foot, to the nearest foot, for each size and type of pipe and shall be compensation in full for furnishing and installing the corrugated metal pipe as specified, including removal of obstructions, excavation, backfilling, compacting, testing, and all incidental costs not specifically covered in other items in the proposal.

End of Section

SECTION 625

MANHOLE CONSTRUCTION AND DROP SEWER CONNECTIONS

625.1 DESCRIPTION:

625.1.1 Sewer Manholes: Construction shall consist of furnishing all materials and constructing manholes complete in place, as detailed, including foundation walls, cast iron steps, manhole frames, covers, and any incidentals thereto, at locations shown on the plans.

625.1.2 Drop Sewer Connections: Construction shall consist of furnishing all materials and constructing drop sewer connections complete in place as detailed, including foundation materials, pipe, and any incidentals thereto, at locations shown on the plans.

625.2 MATERIALS:

Unless otherwise shown on the plans or specified in the special provisions, materials to be used shall conform with the following:

Bricks for manholes Section 775.

Cement mortar for manholes Class D, Section 776.

Concrete for manholes Class A, for drop sewer connection Class C, Section 725.

Pipe used in manholes or drop sewer connections Section 743.

Manhole frame, cover and steps Section 787 and cast in accordance with standard details.

Plastic manhole steps, which conform to O.S.H.A. and A.S.T.M. C-487 requirements, and steel manhole steps, which are completely encapsulated in corrosion resistant rubber and conform to O.S.H.A. and A.S.T.M. C-478 requirements, may be substituted for cast iron manhole steps. The manufacturer shall furnish the Engineer a certification indicating conformance.

625.3 CONSTRUCTION METHODS:

625.3.1 Manholes: Manholes shall be constructed of brick, of precast concrete sections, or of cast in place concrete with cast iron manhole steps, frames and covers, in accordance with the standard details. The invert channels shall be smooth and semi-circular in shape, conforming to the inside of the adjacent sewer sections. Changes in direction of flow shall be made with a smooth curve, having a radius as large as the manhole will permit. Changes in size and grade of the channels shall be made gradually and evenly.

Invert channels may be formed of concrete or brick masonry having a smooth plastered surface, may be half tile laid in concrete or brick, or may be constructed by laying full section of sewer pipe through the manhole and breaking out the top half after the surrounding concrete or brick masonry has hardened. The floor of the manhole outside the channels shall be smoothed and shall slope towards the channels.

The excavation shall be made cylindrical to a diameter sufficient in size to permit sheeting if necessary and leave room that the bricks may be laid in a workmanlike manner and the outside plaster coat properly applied or the precast concrete sections or forms may be properly assembled.

A concrete foundation of Class A concrete shall be poured in accordance with the Standard Details and Section 505.

Brickwork shall not be laid upon a concrete foundation less than 24 hours after such foundation has been poured. No brickwork shall be laid in water, nor, except as prescribed for curing, shall water be allowed to stand or run on any brickwork until the mortar has thoroughly set. Where new work is joined to existing unfinished work, the contact surfaces of the latter shall be thoroughly cleaned and moistened.

Bricks shall be thoroughly moistened prior to placing, and shall be laid in full cement mortar beds. Every course may be a header course, but at least every fourth course shall be a header course. The horizontal cross section of the manhole shall be circular unless otherwise called for on the plans or standard details. An oval or egg-shaped section will not be permitted. A double row-lock course of brick in the manhole wall shall be arched over the top half of the circumference of all inlet and outlet pipes. The

brick manholes shall be plastered outside with ½ inch of cement mortar as shown on the standard details. Inside of brick wall shall be neatly pointed. The plaster coat shall be cured with a liquid membrane-forming compound conforming with Section 726 immediately after plaster has been placed and finished.

Frame and Cover. All machined surfaces on the frame and cover shall be such that the cover will lie flat in any position in the frame and have a uniform bearing through its entire circumference. Any frame and cover which creates any noise when passed over by automobiles shall be replaced. Frames shall be set firmly in a bed of mortar true to line and grade, all as shown on the plans and as called for in these specifications.

Backfilling shall be done in accordance with the requirements for trench backfilling as stated in Section 601.

625.3.2 Drop Sewer Connections: Drop sewer connections shall be constructed in conformance with standard details, as the case may be.

Backfilling shall be done in accordance with the requirements for trench backfilling as stated in Section 601.

625.4 MEASUREMENT:

Measurement will be per manhole installed, complete in place, regardless of depth.

625.5 PAYMENT:

Payment will be made at the unit price bid each manhole, and shall be compensation in full for furnishing and installing manhole, complete, with formed invert, concrete foundation, ladder rungs, cast iron frame and cover, excavation and backfill, paving cut replacement in excess of the applicable pay widths authorized in Section 336, and any incidentals thereto, in conformance with the plans and specifications.

Payment will be made at the unit price bid each, and shall be compensation in full for furnishing and installing vitrified clay pipe sanitary sewer drop connections, concrete encasement, excavation, backfilling, water settling, compaction, sheeting and bracing, removal of obstructions, paving cut replacement, in excess of the applicable pay widths authorized in Section 336, testing, and all work incidental thereto in conformance with the plans and specifications.

End of Section

SECTION 630

TAPPING SLEEVES, VALVES AND VALVE BOXES ON WATER LINES

630.1 DESCRIPTION:

The installation of all tapping sleeves, valves and valve boxes shall conform to this specification and standard details, except as otherwise required on the plans or as modified in the special provisions.

630.2 GENERAL:

For valves 12 inches and smaller, the Contractor shall furnish the manufacturer's standard data and catalogues for gate valves, tapping valves, tapping sleeves, curb stop valves, butterfly valves and any castings.

For valves larger than 12 inches, the Contractor shall furnish shop drawings and technical data required for evaluating and approval of each type of valve, tapping sleeve and valve and butterfly valve. This information shall include complete details, dimensions, weights, diameter of stems, alloy for all valve parts, and any information that may be required to assemble, install, operate and maintain the valve.

The name of the manufacturer, the year of manufacture, the size of the valve, model number and rated working pressure, shall be cast on the body of each valve.

The Contracting Agency may test 10 percent of each type and size of valve furnished. Failure of any of the valves tested to meet these specifications, shall be deemed sufficient cause to reject the entire lot delivered.

The internal working parts of valves of the same make, type, and size, shall be interchangeable.

630.3 GATE VALVES:

630.3.1 General: All valves shall conform to the latest revisions of AWWA standards supplemented as follows:

Valves shall be of the non-rising stem type and shall be counter-clockwise opening (left-hand).

The valve may be furnished with valve stems made from 300 or 400 series stainless steel.

Unless otherwise noted, valves shall have a 2 inch square operating nut.

Bronze for all interior parts of valves shall contain not more than 6 percent zinc if made from cast bronze, or must conform to Copper Development Association #67600 if made from bar stock material.

All interior ferrous surfaces exposed to fluid flow shall be epoxy coated to a minimum dry film thickness of 6 mils. Epoxy coatings shall be factory applied by a electrostatic or thermosetting process in accordance with the manufacturer's printed instructions. The epoxy materials used shall be 100% powder epoxy or liquid epoxy that conforms to the requirements of AWWA C-550, and to the prevailing requirements of the Food and Drug Administration and of the Environmental Protection Agency.

All exterior ferrous surfaces, except finished or bearing surfaces, shall be factory coated with two coats of asphaltic varnish conforming to Federal Specifications TT-V-51c, or shall be epoxy coated as required above for interior surfaces.

By-pass valves, valves attached to side outlets and valves in blow-off lines shall be flanged.

Valves in air release and vacuum relief lines shall be flanged or screwed as shown on the plans.

Valves in fire hydrant lines shall have a flanged joint end on the side towards the main and a restraint or mechanical joint end on the side towards the hydrant.

Valves larger than 20 inch shall have flanged ends, unless otherwise noted.

Valves 20 inch and smaller may be furnished with flanged ends, mechanical joint ends, or push-on joint ends compatible with the type of pipe used, unless otherwise noted.

630.3.2 Supplements Specifically Relating to Valve Sizes:

(A) Valves smaller than 3 inches:

Valves shall be Jones, Ford, Hayes, Mueller or an approved equal, and shall be threaded, all bronze, standard double disc, non-rising stem with wheel handles.

(B) Valves 3 inches through 12 inches:

Valves shall be iron body resilient-seated gate valves in accordance with the latest revision of AWWA C-509.

The valve shall be designed to work equally well with pressure on either side of the gate.

The valve shall be equipped with o-ring packing.

(C) Valves 16 inches through 20 inches:

Valves shall be iron body resilient-seated gate valves in accordance with the latest revision of AWWA C-509 or shall be double-disc gate in accordance with AWWA C-500.

Valves designed in accordance with AWWA C-509 shall be designed to work equally well with pressure on either side of the gate

Valves designed in accordance with AWWA C-500 shall be equipped with bronze tracks, rollers and scrapers. The bolts, nuts, studs, etc., used with the gear case shall conform the requirements for Bonnet Bolting in AWWA C-500.

Valves shall be for operation in a horizontal position. The valve shall have bevel gears. The gears and stuffing box shall be enclosed in a watertight iron case, for operation in a buried location. The case shall be filled with grease at the factory.

By-pass valves shall be furnished and installed on each valve unless otherwise indicated on the approved plans. See Table 630-1 for by-pass valve sizes.

(D) Valves 24 inches and larger:

Valves shall be double-disc gate in accordance with AWWA C-500.

Valves shall be for operation in the horizontal position and equipped with bronze tracks, rollers and scrapers. Valves shall have bevel gears. The gears and stuffing box shall be enclosed in a watertight iron case, for operation in a buried location. Bolts, nuts, studs, etc., used with the gear case shall conform to the requirements for Bonnet Bolting in AWWA C-500. The case shall be filled with grease to the factory.

By-pass valves shall be furnished and installed on each valve unless otherwise indicated on the approved plans. See Table 630-1 for by-pass valve sizes.

630.4 TAPPING SLEEVES AND VALVES:

630.4.1 Tapping Valves: Tapping valves shall be identical in construction with the above specifications for gate valves. Tapping sleeves are considered an integral part of a tapping sleeve and valve assembly, with openings the same as the valve. Tapping valves shall have ends and seat rings of sufficient size to permit the use of full size cutters of either the Mueller or Smith type tapping machines. Tapping sleeve valves shall be flanged on one end to fit the tapping sleeve and a flange hub-end or mechanical joint on the other.

The tapping valve shall have the discs and seat ring so constructed that the inside diameter of the rings shall be at least 3/16 inch larger than the nominal size of the valve. The seat rings shall be bronze and shall have a minimum seating surface area equal to that of a standard gate valve, and the discs shall be proportionately larger to match.

Once the tap has been completed, the Contractor shall not operate the valve unless under direct supervision of the inspector.

TABLE 630-1

BY-PASS VALVE SIZES

Gate Valve Diameter in Inches	By-Pass Valve Diameter in Inches
16 to 20	3
24 to 30	4
36 to 42	6
48	8

630.4.2 Tapping Sleeves: Tapping sleeves shall be of extra heavy construction to provide resistance to line pressures. They shall be built in two halves for assembly around the main to be tapped.

The branch outlet shall have a flanged face for bolting to the tapping valve.

The inside diameter of the outlet branch shall be sufficiently larger than the nominal size to provide clearance for the full size cutters of the tapping machine.

Tapping sleeves shall be of the following types:

(A) Tapping sleeves for pipelines constructed of cast iron, ductile iron or asbestos cement:

Unless otherwise noted, the tapping sleeve assembly shall be pressure tested to 200 psi for a minimum of 30 minutes. The pressure test shall occur prior to tapping the main.

(1) Tapping sleeves in which the water is allowed to circulate between the sleeve and the outside surface shall comply to the following:

Gaskets of approved material shall be provided to form watertight joints along the entire length of the sleeve. The circumferential joints at the ends of the run of these sleeves shall be sealed by mechanical joints. Mechanical joints shall conform to tbe requirements set forth in AWWA C-111 as to dimensions, clearance, materials, etc. except the gaskets and glands for mechanical joints shall be in two pieces.

The longitudinal gaskets shall be totally confined or compressed between ridges and/or grooves extending continuously for the full length of both halves of the sleeve casting. Bolts shall be located close to the outside of the gaskets and closely spaced so as to exert sufficient pressure to form a watertight joint and to amply take care of any design stresses.

(2) Tapping sleeves in which the water is confined to the immediate area of the tap opening may be either of the following:

(a) Cast Iron - The outlet half of each sleeve shall be fitted with a continuous gasket of approximately circular cross section permanently cemented into a groove surrounding the outlet opening. The back half of each sleeve shall be fitted with elastomeric pads, a metal shoe, or other device for developing adequate pressure on the gasket to prevent leakage at any pressure within the design capacity of the pipe. The sleeve shall be similar in construction to the Kennedy Square Seal or Rich-Corey improved sleeve.

(b) Stainless Steel, Type 304 - All integral metal parts of the sleeve shall be stainless steel, type 304. All welds shall be chemically treated and the residue removed so as to return the welded stainless steel to its original corrosion resistant state. The sleeve shall be capable of withstanding 125 ft.-lbs. of bolting torque without deformation of any sleeve components. Actual bolting torque during installation shall be as specified by the manufacturer.

All gaskets shall be of virgin styrene butadiene rubber (SBR), or equal, compound for water services. The complete circle gasket shall be 0.25 inch ±0.03 thick and permanently attached to the sleeve. A dielectric insulating flange insulation kit shall be installed between the stainless steel flange and the cast iron valve. The kit shall contain full faced gaskets, full length sleeves, and single insulating washers. Insulation gasket material shall be neoprene-faced phenolic, insulation sleeves shall be mylar or minlon and full length, insulation washers shall be phenolic, or approved equal. All insulation material shall be of a type designated by the manufacturer as suitable for service at the operation temperatures and pressure specified.

(B) Tapping sleeves for concrete pressure pipes shall be fabricated tapping sleeves and comply to the following.

The sleeves shall be installed in accordance with AWWA Manual M-9. They shall also meet AWWA C-301, and AWWA C-303 standards pertaining to design, manufacturing, testing and welder qualifications. When tapping AWWA C-301 pipe, additional considerations pertaining to installation, testing and tapping shall be noted in the special prevision and/or the plans.

The tapping sleeve assembly shall be designed to meet or exceed the pressure rating of the pipe using the same safety factors.

The tapping sleeve assembly shall be pressure tested to at least 5 percent over the actual working pressure in the pipeline. The main shall be pressurized to full working pressure during the test of the sleeve. The test shall occur prior to tapping of the main.

The sleeve shall be a three part design, back half, front half with draw flange and a gland as shown in Detail 342. The sleeve shall be designed to permit the cutting of the of the rods or prestressing wires of the pipe after installation of the two sleeve halves. The gland shall have a sealing gasket set in a retaining groove on the pressure plate. The sealing portion of the gasket shall be square or rectangular in shape and have minimum dimensions of ½" x ½". The pressure plate on the gland shall be stabilized to eliminate flexing. The gland shall be equipped with load bearing set screws to protect the pipe cylinder from any excess loading caused by the valve, tapping machine, etc. The annular space between the sleeve and the gland shall be grouted through an opening in the sleeve.

Both halves of the sleeve shall be the same thickness and width. With approval from the Engineer, stainless steel strapped back sleeves will be permitted when the outside pipe diameter is irregular and can not accommodate a full back sleeve.

The sleeves shall be furnished with grout horns/openings through which the annular space between the outside pipe surface and the sleeve shall be grouted.

All interior and exterior ferrous surfaces shall be epoxy coated to a minimum dry film thickness of 12 mils. Epoxy coating shall be factory applied by a electrostatic or thermosetting process in accordance with the manufactures's instructions. The epoxy materials used shall be 100% powder epoxy or liquid epoxy that conforms to the requirements of AWWA C-550 for use in a potable water system.

All bolts shall be 304 stainless steel.

No weld-on sleeves or nozzles will be permitted.

Tapping sleeves shall be JCM #415 Type 2 ESS or approved equal.

All external surfaces of the tapping sleeve shall be covered with a minimum of two inches of mortar. The mortar shall be Type "M" per Section 776 using Type II low alkali cement. The mortar shall be held in place by use of wire mesh.

The Contractor shall obtain the necessary dimensions for ordering the sleeve from direct field measurements. Excavation may be required to obtain the measurements. If an excavation is required, the Engineer may require the Contractor to return the land to its original use until the materials are delivered.

The contractor shall provide, for approval of the Engineer, the manufacture, shop drawings, calculations, and any other technical data as required by the Engineer for the tapping sleeve. Also, the contractor shall submit the manufacture history of 6 successful production of the sleeves over the last year. The submittal shall include but not limited to the number, size, location, agency and contact person, etc.

The Contractor shall also provide, for approval by the Engineer, the name of the company/contractor/subcontractor to install the sleeve and perform the tap. The submittal shall include a history of 5 successful sleeve installations and taps per year over the last 3 years. The submittal shall include but not limited to the sizes and locations of the taps, the agencies and contact persons, the addresses and telephone numbers, etc.

630.4.3 Tapping and Associated Fees: Except for meter service connections, taps shall be made by the Agency at prevailing rates or by approved Contractors when allowed or requested by the Contracting Agency. After installation of the tapping sleeve and valve, the Contractor shall provide an excavation sufficient in size to accommodate the tapping operation.

The Contractor shall pay the established shutdown charge to the Contracting Agency every time in is necessary to shut off valves and take a section of a water main out of services.

The above charges, as well as charges for tap connections to steel cylinder and reinforced concrete pipe, are subject to change, as established by the Contracting Agency.

630.5 BUTTERFLY VALVES:

(A) 16 INCHES AND LARGER:

Valves shall be in accordance with AWWA C-504 latest revision as modified herein:

(1) Valve body shall be of cast iron or ductile iron with connecting ends one of or a combination of Flanged (Short Body), mechanical joint or ACP Hub End.

(2) Valves shall be Class 150-B unless otherwise specified.

(3) When requested the manufacturer shall furnish records of tests specified in AWWA C-504.

(4) Shaft seal may be O-ring seal, V-type packing or pull down packing.

(5) The valve disc may be either cast iron or ductile iron.

(6) Valves and operators shall be for direct burial installation.

(7) Valves to be furnished with manual operators and 2 inch square operating nut. Operator torque rating shall be calculated in accordance with AWWA C-504.

(8) Valves shall open when turning the operating nut counter-clockwise.

(9) Valves shall be installed with valve shaft in a horizontal position and the operating shaft vertical.

(10) All interior ferrous surfaces exposed to fluid flow shall be epoxy coated to a minimum dry film thickness of 6 mils. Epoxy coatings shall be factory applied by an electrostatic or thermosetting process in accordance with the manufacturer's printed instructions. The epoxy materials used shall be 100% powder epoxy or liquid epoxy that conforms to the requirements of AWWA C-550, and to the prevailing requirements of the Food and Drug Administration and of the Environmental Protection Agency.

(11) All exterior ferrous surfaces, except finished or bearing surfaces, shall be factory coated with two coats of asphaltic varnish conforming to Federal Specification TT-V-51c, or shall be epoxy coated as required above for interior surfaces.

(12) A manufacturer's affidavit of compliance shall be furnished.

(13) Shop drawings shall be furnished.

(B) 3 INCHES THROUGH 12 INCHES:

SECTION 630

This specification generally describes valves and operator assemblies designed for underground service, as manufactured by Dresser Industries, B-I-F Industries Incorporated, Henry Pratt Company, Allis Chalmers Manufacturing Company, or approved equal.

Where material or equipment is designated on the plans or in this specification by a trade or manufacturer's name, it is so designated primarily to establish standards of quality, finish, appearance and performance.

All specific requirements of this specification must be adhered to, and all necessary modifications shall be made in the article specified by the trade name, type or model or manufacturer's equipment to make it conform to all specific requirements of this specification.

The valves shall be in accordance with AWWA C-504, Class 150-B, except as modified herein:

(1) Valve ends may be the thin type or wafer type to be installed between flanges drilled in conformance with ASA B 16.1-125 or may be flanged both ends or the valves may have bell ends with rubber gaskets, for cast iron pipe or asbestos cement pipe conforming to the kind of pipe being used.

(2) Valves shall be designed for buried service with the valve shaft in a horizontal position and the operating shaft vertical.

(3) Valves shall be left-hand opening, counter-clockwise unless shown otherwise on the plans.

(4) Discs shall be Ni-Resist, ASTM A-436, Type 1, or cast iron, ASTM A-48, Class 40, in accordance with the following variations:

(a) Cast iron disc may be used providing the rubber seat ring is contained on the disc with the rubber ring closing against a Type 304 stainless steel ring or a bronze ring contained in the body of the valve.

(b) Ni-Resist disc may be used where rubber seat is contained in the valve body.

(c) Valves with rubber seats in the valve body may have cast iron discs with a Type 304 stainless steel or bronze edge seating surface retained on the edge of the disc.

Shafts and disc shaft fasteners shall be constructed of Type 304, stainless steel, unless the shaft is completely sealed from the line fluid. Valve shafts complete sealed from the line fluid may be of high strength steel with all other metal parts in contact with the line fluid to be Type 304 stainless steel.

Valves with rubber seat mounted in the body shall have the rubber either bonded or mechanically retained in its final position. Rubber seats which are on the disc edge shall be retained by a clamping ring and screws. Clamping ring and screws shall be made of 18-8 stainless steel, Type 304, or bronze conforming to ASTM B-61 or ASTM B-584.

Manual operators shall have AWWA 2 inch square operating nuts and shall require at least 2 turns per inch diameter to rotate the disc 90 degrees. Operators must accept a minimum of 300 ft. lbs. input torque on stops at ends of travel without damage to valve or operator. The operator torque rating shall equal, or exceed, the valves shown in Table I of AWWA C-504 for valve class specified above.

All interior ferrous surfaces exposed to fluid flow shall be epoxy coated to a minimum dry film thickness of 6 mils.

Epoxy coatings shall be factory applied by an electrostatic or thermosetting process in accordance with the manufacturer's printed instructions.

The epoxy materials used shall be 100% powder epoxy or liquid epoxy that conforms to the requirements AWWA C550-81, and to the prevailing requirements of the Food and Drug Administration and of the Environmental Protection Agency.

All exterior ferrous surfaces, except finished or bearing surfaces, shall be factory coated with 2 coats of asphaltic varnish conforming to Federal Specification TT-V-51c, or shall be epoxy coated as required above for interior surfaces.

630.6 AIR RELEASE AND VACUUM VALVES:

Valve assemblies shall be furnished and installed where shown and as detailed on the drawings.

(A) Air release on water mains shall be controlled by the use of an air release valve assembly, or size and type as shown on the plans. Air release valves shall be of the flanged or screwed type as shown and shall be similar and equal to Apco, Crispin or Simplex.

(B) Vacuum and Air Relief when called for on the plans shall be controlled by a vacuum relief valve on the air release valve noted above and the valves shall be of the same manufacture or may be a combination air and vacuum valve assembly similar and equal to Apco, Crispin or Simplex.

630.7 CONSTRUCTION METHODS:

All valves, their supports, manholes, vaults, and valve boxes shall be installed in accordance with Section 610.

Valves 16 inches and larger, before being shipped from the factory, shall have the flanged ends completely covered with plywood. Plywood shall be left on the valve unit just before installation in the line.

630.8 MEASUREMENT:

Measurement will be by the unit each of the various kinds and sizes of valves, manholes, vaults, or tapping sleeves and valves, including valve boxes and covers.

630.9 PAYMENT:

Payment will be made at the unit price bid each and shall be compensation in full for the complete installation in place including all labor, materials, equipment, and all incidentals necessary to complete the installation. The compensation will also include the cost of necessary pavement replacement in excess of the pay widths allowed in Section 336 for pavement replacement over pipe trenches.

End of Section

SECTION 631

WATER TAPS AND METER SERVICE CONNECTIONS

631.1 DESCRIPTION:

This specification covers work by Contractors installing water services in new subdivisions by Permit and in projects under Contract. All the materials used shall comply with applicable standard specifications and the work performed in accordance with these specifications and standard details. The service connections shall be complete and all material shall be furnished by the Contractor except for the water meter.

All water service connections shall be constructed of Type K copper tubing or ultra high molecular weight polyethylene pipe of nominal iron pipe outside diameter.

All new subdivision water lines shall be staked for line and grade at 100 foot intervals by the Developer's Engineer prior to construction. All meter locations shall be staked by setting two stakes for line and marking one of the stakes for grade.

631.2 MATERIALS:

Copper pipe, tubing and fittings shall conform with Section 754. Polyethylene pipe shall conform with Section 755.

All fittings, pipe and tubing for polyethylene and copper pipe shall be as noted on standard details.

631.3 INSTALLATIONS:

631.3.1 General: Installation of copper tubing for meter service connections shall be in accordance with Section 754.

Meter service connection with copper tubing shall be in accordance with standard details.

The water service connection shall include the tap on the main, the corporation stop, the saddle if applicable, service pipe, appurtenant fittings, the curb stop, meter box and meter box cover, in accordance with standard details. Water meter boxes shall be installed in accordance with standard details to line and grade set by the Developer's Engineer. Upon acceptance, the Developer shall be responsible for damage to water meter boxes and covers until such time as the meters are installed by the Contracting Agency.

After the installation and acceptance of the water main and meter service pipe connections the water meter will be installed by the Contracting Agency upon proper application and payment of prevailing fees.

631.3.2 Standards: Except as otherwise specified all work shall be done in accordance with Sections 601 and 610.

631.3.3 Excavation and Backfill: The backfilling and compaction may be done as soon as the service line is installed, except backfilling and compaction shall not be completed around the corporation stop at the main water line until after inspection and recording of all tap locations. Trench bottom must be smooth and free of sharp objects. The minimum width of trench for water service pipe shall be 3 inches. The minimum depth of service pipe shall be 30 inches below the finished paving grade.

631.3.4 Polyethylene Pipe: Polyethylene pipe shall not be kinked, gouged or damaged during installation and backfilling operations. The pipe shall be placed in the trench allowing at least 12 inches per 100 feet for thermal contraction and expansion. Polyethylene pipe has a high thermal expansion and should never be confined under tension. The pipe should not be stored in the sun or left in the trench under abnormal high temperature. The pipe shall be carefully snaked in the trench bottom and covered up with uniform slack throughout its length. In trenches less than 8 inches in width, the expansion shall be obtained by making the tap on the opposite side of the main from the water meter and providing a loop of slack service pipe back over the top of the water main. Before installing, inspect pipe to detect any damage that may be caused by shipping, storage or handling. Damage spots can be cut out and pipe recoupled with Ford C-66-33, C-66-44, or approved equal brass compression fitting to form a continuous length. Damaged pipe shall not be used. Polyethylene pipe shall be cut only with a tubing cutter with rollers properly designated for the size of pipe being cut. When polyethylene pipe is used, the meter box setting must be placed parallel to the back of the sidewalk in accordance with standard details. Polyethylene pipe shall be installed with large sweeping bends with radius of not less than 18 inches. Polyethylene pipe has a cold flow characteristic and must not be installed under a stressed condition. Compression fittings only may be used with the plastic being held securely between metal to metal. Stainless steel or

brass inserts shall be placed in the proper position in each compression fitting with care taken to assure that the insert remains in place when the fitting is tightened. All meter service lines shall extend at right angles from the main to the curb lines.

631.3.5 Service Taps: One inch and ¾ inch service taps to new meter mains may be made with a saddle, tapped coupling or direct tap in accordance with the following provisions:

The Developer may use heavy tapped couplings for meter service connections on all sizes of pipe including the 3 inch pipe in cul-de-sac streets. Bronze corporation stops must be installed in the tapped couplings prior to pressure testing or disinfection of the water main. Normally in subdivisions no saddles are required for 6 inch pipe and larger. At the Contractor's option, saddles may be used on all 6 inch pipe and larger. All service connections on major and collector streets shall be made with saddles or heavy duty tapped couplings regardless of the water main size or service pipe size. All taps on pipe smaller than 6 inches must be made by either a saddle or heavy tapped coupling with bronze insert. Direct taps must be made by the use of a corporation stop with tapered AWWA machine thread. All wet taps must be made by the Mueller Type B-100 tapping machine or approved equal. A sharp tapping bit must be used in order to obtain clean sharp threads. In general, each tapping tool should be resharpened or discarded after making 6 taps. All copper service pipe which is attached to metallic water mains shall be insulated at the corporation stop with a dielectric insulator. The minimum distance between taps, saddles, and tapped couplings shall be 3 feet.

631.4 TESTING:

All services, service taps and fittings shall be tested along with the water main in accordance with Subsection 610.14.

631.5 CLEANUP AND COMPLETION:

Upon completion and acceptance of all phases of the water main and meter service lines the Developer shall release the new subdivision water system to the Contracting Agency for final operation and maintenance with all interior valves and corporation stops in open position and with all meter curb stops and valves at the connections to existing mains closed.

631.6 INSPECTION:

The Developer's Engineer shall make an as-built plan and make a record of the locations of all water service connections prior to the connections being covered up. This as-built plan shall give the stationing of each service tap. The stationing to be continuous for each street, and shall begin at the street intersection or property line at the end of the block.

631.7 SERVICE OVER 2 INCHES:

All service taps larger than 2 inches shall be made by the Agency after an application and payment of prevailing fees, unless otherwise required by the Agency.

631.8 SERVICE ON EXISTING MAINS:

Where all or part of a new subdivision is served by existing water mains, only authorized personnel of the Contracting Agency shall install the service connections upon proper application and payment of prevailing fees.

End of Section

PART 700

MATERIALS

Section	Title	
701	Rock, Gravel, and Sand	701-1
702	Base Materials	702-1
703	Riprap	703-1
705	Portland Cement Treated Base	705-1
709	Reclaimed Asphalt Pavement	709-1
710	Asphalt Concrete	710-1
711	Paving Asphalt	711-1
712	Liquid Asphalt	712-1
713	Emulsified Asphalts	713-1
715	Slurry Seal Materials	715-1
716	Cover Material	716-1
717	Asphalt-Rubber	717-1
718	Preservative Seal for Asphalt Concrete	718-1
719	Recycled Asphalt Concrete Hot Mixed	719-1
725	Portland Cement Concrete	725-1
726	Concrete Curing Materials	726-1
727	Steel Reinforcement	727-1
728	Controlled Low Strength Material	728-1
729	Expansion Joint Filler	729-1
735	Reinforced Concrete Pipe	735-1
736	Non-Reinforced Concrete Pipe	736-1
737	Asbestos-Cement Pipe and Fittings for Storm Drain and Sanitary Sewer	737-1
738	High Density Polyethylene Pipe & Fittings for Storm Drain & Sanitary Sewer	738-1
741	Lining for Reinforced Concrete Sanitary Sewer Pipe	741-1
743	Vitrified Clay Pipe	743-1
744	ABS Truss Pipe and Fittings	744-1
745	PVC Sewer Pipe and Fittings	745-1

750 Iron Water Pipe and Fittings 750-1

752 Asbestos-Cement Water Pipe and Fittings 752-1

753 Galvanized Pipe and Fittings 753-1

754 Copper Pipe, Tubing and Fittings 754-1

755 Polyethylene Pipe for Water Distribution 755-1

756 Fire Hydrants 756-1

757 Sprinkler Irrigation System 757-1

758 Concrete Pressure Pipe - Steel Cylinder Type 758-1

760 Coating Corrugated Metal Pipe and Arches 760-1

761 Structural Plate Pipe, Arches, and Pipe Arches 761-1

765 Rubber Gaskets for Concrete Pipe 765-1

770 Structural and Rivet Steel, Rivets, Bolts, Pins, and Anchor Bolts 770-1

771 Galvanizing 771-1

772 Chain Link Fence 772-1

775 Brick and Concrete Block 775-1

776 Masonry Mortar and Grout 776-1

778 Lumber 778-1

779 Wood Preservatives 779-1

780 Timber Piles 780-1

781 Steel Piles 781-1

782 Concrete Piles 782-1

785 Steel Castings 785-1

786 Bronze Castings 786-1

787 Gray Iron Castings 787-1

790 Paint 790-1

792 Dust Palliative 792-1

795 Landscape Material 795-1

SECTION 701

ROCK, GRAVEL, AND SAND

701.1 GENERAL:

The following specifications set forth the requirements for crushed rock, gravel, sand, and quarry stone. Samplings and sieve analysis shall be performed in accordance with ASTM D-75 and ASTM C-136. Sand equivalents shall be determined in accordance with AASHTO T-176. The liquid limit and plasticity index shall be determined in accordance with AASHTO T-89 and T-90.

701.2 CRUSHED ROCK AND GRAVEL:

Rock and gravel shall be clean, hard, sound, durable, uniform in quality, and free of any detrimental quantity of soft, friable, thin elongated, or laminated pieces, disintegrated material, organic matter, oil, alkali, or other deleterious substance.

The loss by abrasion in the Los Angeles abrasion machine, determined as prescribed in ASTM C-131, Grading A, shall not exceed 10 percent, by weight, after 100 revolutions nor 40 percent after 500 revolutions.

701.2.1 Crushed Rock: Crushed rock shall consist of the product obtained by crushing rock, stone, or gravel so that at least 50 percent by weight of aggregate retained on the No. 4 sieve for ¾ inch or larger maximum sizes, and 50 percent retained on the No. 8 sieve for maximum sizes less than ¾ inch shall consist of particles which have at least one rough, angular surface produced by crushing. All material that will pass a grizzly with bars spaced 15 inches apart, clear opening, shall be crushed when producing from the Contracting Agency's source.

The gradation of crushed rock shall comply with ASTM D-448.

701.2.2 Gravel: Material designated herein as gravel shall be composed entirely of particles that are either fully or partially rounded and water-worn. Crushed rock obtained by crushing rock which exceeds ASTM D-448 maximum gradation sizes may be combined provided it is uniformly distributed throughout and blended with the gravel. The quality and gradation requirements shall be as stated in this specification.

701.3 SAND:

Sand shall be fine granular material produced by the crushing of rock or gravel or naturally produced by disintegration of rock and shall be sufficiently free of organic material, mica, loam, clay, and other deleterious substances to be thoroughly suitable for the purpose for which it is intended.

701.3.1 Sand for Asphalt Concrete Pavement: Sand for asphalt concrete pavement shall comply with AASHTO M-29 except that grading requirements shall be deleted and have a minimum sand equivalent of not less than 50 and shall be non-plastic when tested in accordance with AASHTO T-89 and T-90.

701.3.2 Sand for Portland Cement Concrete, Mortar and Plaster: It shall be thoroughly and uniformly washed and shall be entirely free from oil and deleterious substances.

The average value of sand equivalent determined on 3 successive samples shall not be less than 70. No individual sample shall have a sand equivalent less than 65.

The size and grading of sand to be used in cement concrete, mortar, and plaster shall be such as to conform with the requirements specified as follows:

Concrete:	ASTM C-33
Mortar:	ASTM C-144
Plaster:	ASTM C-35

701.3.3 Coarse Aggregate for Portland Cement Concrete: Coarse aggregate shall conform to ASTM C-33 grading size No. 467, 57, 67, and 7.

701.3.4 Aggregate for Masonry Grout: The size and grading of the fine or coarse aggregate to be used in masonry grout shall conform with ASTM C-404.

701.3.5 Aggregate for Controlled Low Strength Material: Coarse aggregate shall conform to ASTM C-33 grading size No. 57. The size and gradation of fine aggregates (sand) shall conform to ASTM C-33.

701.4 QUARRY STONE:

701.4.1 General: Quarry stone shall be angular, sound, durable, hard, resistant to abrasion; free from laminations, weak cleavages, and undesirable weathering, leaching, exfoliation tendencies, and slaking; and of such character that it will not disintegrate from the action of air, water, or the conditions to be met in handling and placing. Stone shall be clean and free from deleterious impurities, including alkali, earth, clay, refuse, and adherent coatings. Suitable tests and/or service records will be used to determine the acceptability of the stone. Tests to which the material may be subjected include petrographic analysis, X-ray diffraction, specific gravity, absorption, abrasion, rock drop, soundness, wetting and drying, and such other tests as may be considered necessary to demonstrate to the Engineer that the materials are acceptable for use in the work. In connection therewith, the Contractor shall notify the Engineer in writing at least 60 days prior to use of the intended sources of quarry stone.

701.4.2 Test Requirements: Quarry stone shall meet the following requirements except as may be otherwise provided on the plans and in the special provisions:

(A) Apparent specific gravity: 2.65 minimum.

(B) Breakdown:

Rock drop breakdown:	5 percent maximum
Abrasion breakdown at 1000 revolutions:	40 percent maximum
Breakdown after 10 cycles of wetting and drying:	5 percent maximum
Solubility in water, breakdown, or softening:	None

701.4.3 Test Methods: Unless otherwise specified in the special provisions or indicated on the plans, test methods for quarry stone shall be as follows:

(A) Apparent specific gravity per ASTM C-127.

(B) Abrasion characteristics to be determined by either Rock Drop Test or Los Angeles Rattler, ASTM C-131, as required on the plans or the special provisions.

(1) Standard Rock Drop Test. Tests shall be made on groups of 5 accurately weighed sizes of rocks: No. 1, ranging from 75 to 100 lbs.; No. 2, 100 to 125 lbs.; No. 3, 125 to 150 lbs.; No. 4, 150 to 175 lbs.; No. 5, 175 to 225 lbs.

Each rock of the 5 sizes shall be dropped 3 times on the group of the other 4, in an enclosure, from successive heights of 10, 15, and 18 feet. The enclosure shall have a flexible medium weight galvanized iron floor or equivalent, set on a solid foundation. Order of dropping shall be Nos. 3, 2, 4, 1, 5. All rock passing a 3 inch square mesh screen after test shall be weighed and recorded as a percentage of the total initial weight of the 5 rocks.

(2) Los Angeles abrasion machine, per ASTM C-131, Grading B.

(C) Wetting and drying. The stone shall be crushed, screened, and 1000 or 1500 grams of the ¾ inch to ⅜ inch fraction taken for the test.

The crushed and graded stone shall be submerged in water for 18 hours at room temperature, after which the sample shall be drained and oven-dried at 140°F. When dry, the sample shall be cooled to room temperature. This would complete one cycle.

The percent loss shall be determined by screening the tested sample on a No. 4 sieve and shall be computed as follows:

$$\frac{100 \times \textit{Weight of Material Passing No. 4 Sieve}}{\textit{Total Weight of Sample}} = \textit{\% Loss}$$

(D) Accelerated water breakdown and solubility test. Air-dry samples of representative stone weighing approximately 1 lb. each shall be immersed for 8 hours at 140°F., in distilled water, local tap water, or 3.5 percent sodium chloride solution.

End of Section

SECTION 702

BASE MATERIALS

702.1 GENERAL:

Materials for use as aggregate base shall be classified in the order of preference as follows:

(A) Crushed Aggregate.

(B) Processed Natural Material.

(C) Processed Steel Slag.

(D) Decomposed Granite.

When base material without further qualification is specified, the Contractor shall supply crushed aggregate. When a particular classification of base material is specified, the Contractor may substitute any higher classification of base material for the specified classification.

Except where materials are being obtained from a previously approved source, the Contractor shall give the Engineer 10 days advance notice, in writing, of the source of the base material he intends to use in order to allow sufficient time to perform the necessary tests.

702.2 CRUSHED AGGREGATE:

Crushed aggregate shall consist of crushed rock or crushed gravel or a combination thereof as defined in Section 701.

702.2.1 Soundness: The percentage of wear of crushed aggregate to be used as base will be determined as in Section 701, except that Grading B of ASTM C-131 shall be used. The percentage of wear of the material shall not exceed 40 after 500 revolutions.

702.2.2. Grading: The aggregate shall be well graded when tested in accordance with ASTM C-136 and C-117. The percentage composition by weight shall be within Table 702-1.

TABLE 702-1

CRUSHED AGGREGATE GRADATION

Sieve Sizes (Square Openings)	Percentage by Weight Passing Sieve		
	Select Material		Aggregate Base
	Type A	Type B	
3"	100		
1½"		100	
1¼"			100
No. 4	30-75	30-70	38-65
No. 8	20-60	20-60	25-60
No. 30	10-40	10-40	10-40
No. 200	0-12	0-12	3-12

702.2.3 Plasticity Index: Unless otherwise noted, the Plasticity Index as tested in accordance with AASHTO T-146 Method A (Wet Preparation), T-89 and T-90 shall not be more than 5.

702.3 PROCESSED NATURAL MATERIAL:

702.3.1 General: Processed natural material shall consist of hard, durable fragments of stone or gravel and a filler of sand or other finely divided mineral matter. It shall be free from an excess of soft or disintegrated pieces, alkali, adobe, vegetable matter, loam, or other deleterious substances.

702.3.2 Physical Requirements: When sampled and tested in accordance with standard test methods, the aggregate shall meet the following requirements:

(A) Percentage of Wear: When tested in accordance with ASTM C-131, the percentage of wear shall not exceed 40 percent after 500 revolutions.

(B) Plasticity Index: When tested in accordance with AASHTO T-146 Method A (Wet Preparation), T-89 and T-90, the plasticity index shall not be more than 5.

(C) Liquid Limit: When tested in accordance with AASHTO T-89, the liquid limit shall not be more than 25 percent.

702.3.3 Crushed Material: Crushed material is not required, but may be incorporated in the finished product.

702.3.4 Grading: The aggregate shall conform to the sieve analysis in this specification except that the least dimension of the maximum particle size shall not exceed ⅔ of the compacted thickness of the specified lift being placed.

702.4 DECOMPOSED GRANITE:

Decomposed granite shall be any granitoid igneous rock which has been weathered in place and which has as principal constituents granular fragments of quartz and feldspar. It may also contain fragments of granitic rock not yet broken down into the component minerals. This material shall remain stable when saturated with water. Particles larger than 3 inches, which will not be broken in the process of rolling and tamping during construction, shall not be used.

Decomposed granite shall conform to the following requirements:

(A) When tested in accordance with this specification, not more than 20 percent shall pass the No. 200 mesh sieve.

(B) The P.I. of material passing the No. 200 sieve prior to testing shall not be less than 3 nor greater than 10. The Plasticity Index shall be tested in accordance with AASHTO T-146 Method A (Wet Preparation), T-89 and T-90.

702.4.1 Preparation of Test Specimens: A quantity of sufficient size to have a dry weight of 15 pounds shall be selected and dried to constant weight at a temperature between 215°F. and 230°F. Fifteen pounds of this material shall then be subjected to 500 revolutions in a Los Angeles abrasion machine, as described in Section 701, except that nothing shall be placed in the drum other than the material to be tested.

The material that has been subjected to the breakdown shall be tested in accordance with ASTM C-117 to determine the percentage of material finer than a No. 200 mesh sieve by washing.

End of Section

SECTION 703

RIPRAP

703.1 STONE:

Stone for plain and grouted riprap shall be sound and durable, free from seams and coatings, and of such characteristics that it will not disintegrate when subjected to the action of water. Loss by abrasion shall not exceed the limits specified in Section 701.

Stone shall be of shapes which will form a stable protection structure of the required depth. Rounded boulders or cobbles shall not be used on slopes steeper than 2 to 1 unless grouted. Angular shapes may be used on any slope. Flat or needle shapes will not be acceptable unless the thickness of the piece is more than ⅓ the length.

Waste concrete may be used, if the pieces are sound free from coatings, and meet the size requirements specified for a stone.

703.2 SIZE OF STONE:

Riprap stone shall be as large as can be conveniently placed in a layer of the required depth. The stones, excepting small stones and spalls used to chink interstices shall weigh not less than 10 pounds and at least 50 percent of the stone shall weigh not less than 100 pounds.

703.3 CONCRETE:

The portland cement, aggregates and mixing shall be as specified in Section 725 and as herein specified. The aggregate may be pitrun material, at least 80 percent of which shall pass a 1½ inch square mesh screen. Separating aggregates by primary sizes will not be required. Los Angeles rattler tests and soundness tests will not be required.

The mixed concrete shall contain 376 pounds of portland cement per cubic yard.

The amount of water shall be such as to produce a mixture with a slump of 3 to 5 inches, when tested in accordance with ASTM C-143.

703.4 SACKS:

Sacks shall be made of burlap not lighter than 10 ounce and shall be approximately 19½ inches by 36 inches measured inside the seams when the sack is laid flat. Sound reclaimed sacks may be used. The capacity of each sack shall be 1.25 cubic feet. Each sack shall contain 1 cubic foot of concrete loosely placed so as to leave room for folding the open end, the fold just enough to retain the concrete at the time the filled sacks are placed. Immediately after filling, the sacks shall be placed and lightly trampled to cause them to conform with the ground surface and with adjacent sacks in place.

End of Section

SECTION 705

PORTLAND CEMENT TREATED BASE

705.1 GENERAL:

The cement treated base shall consist of furnishing all materials in accordance with these specifications. The estimated cement requirement is 3½ percent by weight of the dry aggregate. The cement shall be Type II, low alkali.

705.2 AGGREGATE FOR CEMENT TREATED BASE:

The aggregate for cement treated base shall conform to the requirements of Section 701 except the plasticity of the material passing the No. 40 sieve shall not exceed 5 and the grading shall be per Table 705-1.

TABLE 705-1

CEMENT TREATED BASE GRADATION

Sieve Size	Percentage By Weight Passing Screen
1½"	100
No. 4	40-70
No. 40	30 Max.
No. 200	0-15

705.3 PORTLAND CEMENT AND WATER:

Portland cement and water shall conform to the requirements of Section 725.

705.4 COMPRESSIVE STRENGTH OF CEMENT TREATED BASE:

The minimum compressive strength at 7 days shall not be less than 500 psi when tested in accordance with ASTM D-1633.

705.5 BITUMINOUS MATERIAL FOR CURING SEAL:

Bituminous material for curing seal shall conform to the requirements of Sections 712 or 713 for the type specified.

End of Section

SECTION 709

RECLAIMED ASPHALT PAVEMENT

709.1 DESCRIPTION:

Reclaimed Asphalt Pavement (RAP) is pavement containing RAP asphalt and RAP aggregates, which has been processed to 1½ inches maximum size and is free of detrimental quantities of organic, non-granular soils and deleterious materials. The stored RAP shall be uniform in appearance and well graded from fine to coarse.

709.2 STORAGE:

RAP shall be stored in such a manner to permit ready inspection and shall be protected from contamination. Any portion of the stockpile that has been consolidated so that the uniformity is affected, will require reprocessing prior to use.

709.3 TEST REQUIREMENTS:

Prior to the use of RAP in a recycled asphalt concrete mix, the reclaimed asphalt concrete supplier shall furnish the Engineer with the following test reports from the stockpiles that are to be used for recycling.

(A) Sand equivalent test of the unextracted RAP: Minimum of 80 when tested in accordance with ASTM D-2419 or AASHTO T-176.

(B) RAP asphalt content ASTM D-2172 and D-1856.

(C) Gradation test of the sample aggregate, after removal of the RAC per Section 710.4.2, using sieve sizes per Section 710.4.1, for the appropriate mix.

End of Section

710.3.3 Asphalt Cement Content: The amount of asphalt cement placed in the mix shall be stated in the mix design. However, when not specified, the amount of asphalt, by weight of the total mixed material, to be added shall be within the limits of Table 710-7.

TABLE 710-7

ASPHALT CONTENT (%)

Mix/ Designation (mm)	For Gradations Above the Restricted Zone	For Gradations Below the Restricted Zone
9.5 and 12.5	5.5 to 6.5	4.5 to 6.0
19.0 and 25.0	5.0 to 6.0	4.0 to 5.5
37.5	4.0 to 5.0	3.0 to 4.5

710.3.4 Voids in Mineral Aggregate: The voids in the mineral aggregate shall comply with the criteria in Table 710-8, with respect to the nominal maximum aggregate size.

TABLE 710-8

VOIDS IN MINERAL AGGREGATE

Nominal Maximum Size/ Designation (mm)	Maximum Size (mm)	Minimum VMA (percent)
9.5	12.5	15
12.5	19.0	14
19.0	25.0	13
25.0	37.5	12
37.5	50.0	11

710.3.5 Dust Proportion: The dust proportion is defined as the ratio of the percent finer than the 0.075 mm sieve, including mineral filler, mineral admixture, and anti-stripping agent, to the effective binder content ($P_{0.075}/P_{be}$). The dust proportion shall be between 0.60 and 1.2 for aggregate gradations that fall below the restricted zone and between 0.60 and 1.4 for aggregate gradations that are above the restricted zone.

710.3.6 Moisture Sensitivity: The resistance to moisture damage shall be evaluated in accordance with AASHTO T-283, "Standard Method of Test for Resistance of Compacted Bituminous Mixture to Moisture Induced Damage," without the optional freeze-thaw cycle. The asphalt concrete, at the design binder content, shall have a minimum tensile strength ratio of 0.70 when the aggregate gradation is below the restricted zone and 0.60 when the aggregate gradation is above the restricted zone.

710.4 PRODUCTION TOLERANCES:

Asphalt concrete from the mixing facility shall be accepted on the basis of aggregate gradation, asphalt cement content, coarse/fine aggregates and volumetrics. These evaluations shall be performed on samples secured at the place of manufacture or from the roadway in accordance with the provisions of AASHTO Designation, T-168, "Standard Method of Test for Sampling Bituminous Paving Mixtures."

710.4.1 Aggregate Gradation: The Engineer at his discretion may accept the aggregate gradation on the basis of cold feed or hot bins. The testing shall be in accordance with AASHTO Designation T-11, "Standard Method of Test for Materials Finer Than 0.075 mm Sieve in Mineral Aggregates by Washing" and AASHTO Designation T-27, "Sieve Analysis of Fine and Coarse Aggregates" or in accordance with AASHTO T-30, "Standard Method of Test for Mechanical Analysis of Extracted Aggregate," when solvent extraction or incineration methods are utilized to determine asphalt content.

The target values for all sieve sizes will be established by the mix design. The production tolerance for the gradation shall be tested against the following sieves: 0.075, 0.15, 0.6, 2.36, 4.75, 9.5, 12.5, 19, 25, 37.5 mm sieves. The aggregate gradation will be considered acceptable when the variations from the mix design percentages do not exceed the tolerances in Table 710-9 for a single event test. The full tolerance will be applied to the mix design percentages for acceptance. The restricted zone is considered a design requirement only.

TABLE 710-9

ALLOWABLE AGGREGATE VARIATION

Maximum Aggregate Size	100 % passing
Nominal Maximum Aggregate Size	±7%
2.36 mm Sieve to the Nominal Maximum Aggregate Size	±6%
0.150 mm and 0.600 mm Sieves	±4%
0.075 mm Sieve	±2.0%

710.4.2 Asphalt Cement Content: The asphalt content may be determined in accordance with AASHTO Designation T-164, "Quantitative Extraction from Bituminous Paving Mixtures," AASHTO Designation T-287, "Asphalt Cement Content of Asphalt Concrete Mixtures by the Nuclear Method" or ARIZ 427 "Asphalt Cement Content by Incineration." The asphalt content determined by solvent extraction methods may be corrected for a retention value determined in accordance with ARIZ 407d, "Determination of Asphalt Retained in Bituminous Mixtures."

The asphalt cement content shall be considered acceptable if it is within ±0.40% of the mix design target value. Variations beyond these limits will be investigated and the Contractor will be required to correct the conditions causing them.

If analysis shows a variation in the bitumen content which is greater than ±0.50% of the mix design target value for a single event test, or greater than ±0.40% for an average of the last 3 or more consecutive tests, it will be cause for discontinuance of the plant production until the nonconformance has been corrected.

710.4.3 Coarse/Fine Aggregates: The coarse/fine aggregate requirements shall be considered acceptable if the test values on production material falls within the mix design requirements established in Table 710-4, except for the uncompacted voids.

The uncompacted voids may be determined from collected samples in accordance with AASHTO TP-304, Method A, "Test Method for Uncompacted Void Content of Fine Aggregate as influenced by Particle Shape, Surface Texture & Grading, Method A." This result shall be calculated using the fine aggregate bulk oven dry specific gravity reported in the mixture design report. This same procedure may be performed on aggregate resulting from solvent extraction or incineration methods. The fine aggregate angularity shall be considered acceptable if the test value on production material is not less than the uncompacted voids specified on the mix design minus 2.0% or not less than 1.0% below Table 710-4, which ever results in the higher uncompacted void content.

710.4.4 Volumetrics: The volumetrics shall be determined by The Asphalt Institute's manual, MS-2 "Mix Design Methods for Asphalt Concrete" or The Asphalt Institute's "Superpave™ Volumetric Mix Design Manual, SP-2." The volumetric values shall be considered acceptable if the test values on production material falls within the mix design criteria established in section 710.3.2.

710.5 PRODUCTION REQUIREMENTS:

710.5.1 Quality Control: Quality control shall be the responsibility of the Contractor or his supplier. The Engineer reserves the right to obtain samples of any portion of any material at any point of the operations for his own use. Also, the Engineer reserves the right to order the use of any drying, proportioning and mixing equipment or the handling of any material discontinued which, in his/her opinion, fails to produce a satisfactory mixture.

The asphalt concrete mix produced shall conform to the properties of the mix design. When the asphalt concrete mix does not conform to the approved mix design properties, the production shall cease immediately.

When liquid anti-stripping agents are used, the agent shall conform to the requirements of AASHTO designation R 15-89. The agent shall be added in accordance with the manufacturer's recommended dosage rate.

Other mineral filler, mineral admixture, or anti-stripping agents, shall be approved by the Engineer prior to start of the mix design

TABLE 710-4

COARSE/FINE AGGREGATE REQUIREMENTS

Characteristics	Light Volume Traffic	Medium or Heavy Volume Traffic
Fractured Faces % (Coarse aggregate only) AZ test method 212D)	75.0, 1 or more	85.0, 1 or more 80.0, 2 or more
Uncompacted Voids % Min. (AASHTO T-304, Method A)	42.0	45.0
Flat & Elongated Pieces % Max. (ASTM D-4791)	10.0	10.0
Sand Equivalent % Min. (AASHTO T-176)	40.0	50.0
Plasticity Index (AASHTO T-90)	Nonplastic	Nonplastic

710.3 MIX DESIGN REQUIREMENTS:

710.3.1 General: Unless authorized by the Engineer, no work shall be started on the project until the Contractor or his supplier has submitted an asphalt mix design acceptable to the Engineer. The mix design shall be prepared by a laboratory that is accredited through the AASHTO Accreditation Program in Hot Mix Asphalt Aggregates and Hot Mix Asphalt or The National Bureau of Standards in the National Voluntary Laboratory Accreditation Program (NVLAP) for Construction Services (Asphalt). The laboratory shall be under the direct supervision of a Civil Engineer, registered by the State of Arizona, with a minimum of five years experience in the development of asphalt concrete mix designs. A copy of the certification shall be required with each mix design submittal. The date of the design shall not be older than one year from the date of submittal, unless supportive documentation is provided and approved by the Engineer.

The mix design report shall include the following elements.

1. A description of all products that are incorporated in the asphalt concrete along with a statement disclosing the sources of all products, including mineral admixtures, anti-stripping agents and their method of introduction;

2. The mix plant location, a copy of the certification of Hot Mix Asphalt Production Facilities by Arizona Rock Products Association and a copy of all certifications for weighting and metering devices within the plant.

3. The results of testing performed on all aggregates to assure compliance with Section 701 and 710.

4. The results of all laboratory tests associated with the mix design development, a plot of the gradation on the Federal Highway Administration's 0.45 Power Gradation Chart, plots of all compaction curves and the results of the moisture damage testing (Section 710.3.6);

5. A specific recommendation for design asphalt content and any limiting conditions that may be associated with the use of the design, such as minimum percentages of crushed or washed fine aggregate.

6. Mixing and compaction temperatures.

7. The suppliers product code, the laboratory Engineer's seal (signed and dated), and the date the design was performed.

The mix design shall be submitted to the Agency by the Contractor for which it was developed. This submittal shall include a certification, signed by the Officer of the Contractor or his supplier stating that the materials submitted for the mix design are representative of those that will be utilized for the production of the asphalt concrete represented by the mix design. Once the mix design has been approved by the agency and the mixing plant selected, the Contractor and/or his supplier shall not change plants nor utilize additional mixing plants without prior approval of the Engineer. Any changes in the plant operation, the producers pit, the asphalt cement, including modifiers, or any other item that will cause an adjustment in the mix, shall be justification for a new mix design to be submitted.

710.3.2 Mix Design Criteria: The mix design shall be performed by one of two methods, Marshall Mix Design or Superpave™ Mix Design. The method shall be specified on the plans, special provisions, or by the Engineer. A minimum of 4 points will be used to establish the mix design results.

710.3.2.1 Marshall Mix Design : The Marshall Mix Design shall be performed in accordance with the requirements of The Asphalt Institute's Manual, MS-2 "Mix Design Methods for Asphalt Concrete". The mix shall utilize the compactive effort described in AASHTO T-245, "Standard Method of Test for the Resistance to Plastic Flow of Bituminous Mixtures Using Marshall Apparatus." The mix shall comply with the criteria in Table 710-5.

TABLE 710-5

MARSHALL MIX DESIGN CRITERIA

Characteristics	Criteria
Compactive Effort (Each Side of Specimen)	75 blows
Marshall Stability, N	8,000 Minimum
Marshall Flow, 0.25 mm	8–16
Effective Air Voids, %	4±0.2
Voids in Mineral Aggregate, %	Table 710-8
Voids Filled with Asphalt, %	70-80 (Light Traffic) 65-78 (Medium Traffic) 65-75 (Heavy Traffic)

710.3.2.2 Superpave™ Mix Design: The Superpave™ Mix Design shall be performed in accordance with the requirements of The Asphalt Institute's "Superpave™ Volumetric Mix Design Manual, SP-2." The design shall utilize the Superpave™, gyratory compactor described in AASHTO TP-4, "Preparation of Compacted Specimens of Modified and Unmodified Hot Mix Asphalt by Means of the SHRP Gyratory Compactor" and AASHTO PP-2, "Short and Long-term Aging Bituminous Mixes." The mix shall comply with the criteria in Table 710-6.

TABLE 710-6

SUPERPAVE™ MIX DESIGN CRITERIA

	Low Traffic	Medium Traffic	Heavy Traffic	Criteria
Gyrations				
Nini	7	8	8	< 89*
Ndes	82	93	105	96±0.2*
Nmax	127	146	167	< 98*
% Voids in Mineral Aggregate	Table 710-8	Table 710-8	Table 710-8	--
% Voids Filled	70-80	65-78	65-75	--

* These criteria are expressed as a percentage of the maximum theoretical specific gravity.

SECTION 710

ASPHALT CONCRETE

710.1 GENERAL:

Asphalt concrete shall be a mixture of asphalt cement and mineral aggregates. Mineral admixture, mineral filler and anti-stripping agent shall be included in the mixture when required by the mix design or by the Engineer. All materials shall be proportioned by weight, volume or a combination in a central mix plant in the proportions required by the mix design to provide a homogeneous and workable mass.

The asphalt concrete mixes shall be of the types shown in Table 710-1.

TABLE 710-1

ASPHALT CONCRETE MIXES

Designation (mm)	Application	Design Target Lift Thickness (mm)
9.5	Surface Course	25.0
12.5	Surface Course	37.5
19.0	Base or Surface Course	50.0
25.0	Base Course	75.0
37.5	Base Course	100.0

The designation is the nominal maximum aggregate size of the mix. The nominal maximum aggregate size is defined as the next largest sieve size above the first standard sieve to retain more than 10 percent of the mineral aggregate. The standard sieve sizes are 9.5 mm, 12.5 mm, 19 mm, 25 mm, and 37.5 mm and 50 mm.

Each mix can be designed for low, medium or high traffic conditions. Low traffic conditions are conditions where the asphalt mix will be subject to low volume and low weight vehicle usage. Examples of this condition are residential streets and most parking lots. Medium traffic conditions are conditions where the asphalt mix will be subject to moderate volumes and heavy weight vehicle usage as found on collector streets and in parking lots with truck traffic. High traffic conditions are conditions where the asphalt mix will be subject to high volume and/or heavy weight vehicle usage as found on arterial streets.

710.2 MATERIAL:

710.2.1 Asphalt Cement: The asphalt cement specified in this section has been developed for use in desert climate conditions. Should it be utilized in other climates, consideration should be given to adjustments in the asphalt selection. The asphalt cement shall be a performance grade asphalt conforming to the requirements of Section 711 for PG 70-10, unless otherwise specified in the plans or special provisions.

710.2.2 Aggregate: Coarse and fine aggregates shall conform to the applicable requirements of Section 701, except as modified herein.

Coarse aggregate is material retained above the 2.36 mm sieve and fine aggregate is material passing the 2.36 mm sieve.

Blend sand (naturally occurring or crushed fines) shall be clean, hard and sound material which will readily accept asphalt coating. The blend sand grading shall be such that, when it is mixed with the other mineral aggregates, the combined product shall meet the grading requirements of the designated mix, as specified in tables 710-2, 710-3 and 710-4.

For gradations that pass under the restricted zone, the natural sand shall not exceed 15 percent by weight of the total aggregate.

710.2.2.1 Aggregate Structure: For mix design only, the combined aggregates, including the mineral admixture, mineral filler and anti-strip agent, shall meet the gradation requirement in Table 710-2.

TABLE 710-2

GRADATION REQUIREMENTS - PERCENT BY WEIGHT PASSING

Seive Size (mm)	Designation (mm)				
	9.5	12.5	19	25	37.5
50.0	--	--	--	--	100
37.5	--	--	--	100	90 - 100
25.0	--	--	100	90 - 100	< 90
19.0	--	100	90 - 100	< 90	--
12.5	100	90 - 100	< 90	--	--
9.5	90 - 100	< 90	--	--	--
4.75	< 90	--	--	--	--
2.36	32 - 67	28 - 59	23 - 49	19 - 45	15 - 41
0.075	2.0 - 10.0	2.0 - 10.0	2.0 - 8.0	1.0 - 7.0	0 - 6.0

The limits of a restricted zone shall be defined as the sieve gradations in Table 710-3.

TABLE 710-3

RESTRICTED ZONE BOUNDARY
Percent Passing (Minimum - Maximum)

Seive Size (mm)	Designation (mm)				
	9.5	12.5	19	25	37.5
4.75	--	--	--	39.5 - 39.5	34.7 - 34.7
2.36	47.2 - 47.2	39.1 - 39.1	34.6 - 34.6	26.8 - 30.9	23.3 - 27.3
1.18	31.6 - 37.6	25.6 - 31.6	22.3 - 28.3	18.1 - 24.1	15.5 - 21.5
0.60	23.5 - 27.5	19.1 - 23.1	16.7 - 20.7	13.6 - 17.6	11.7 - 15.7
0.30	18.7 - 18.7	15.5 - 15.5	13.7 - 13.7	11.4 - 11.4	10.0 - 10.0

When plotted on a Federal Highway Administration 0.45 Power Gradation Chart, the aggregate grading shall miss the restricted zone as shown in Table 710-3. Any gradation that passes through the restricted zone will be considered unacceptable. When the asphalt pavement will be subject to high or medium traffic conditions, the gradation curve shall fall below the restricted zone. When the asphalt pavement will be subject to low traffic conditions, the gradation curve may fall on either side of the restricted zone.

710.2.2.2 Aggregate Characteristics: The coarse and fine aggregates shall comply with the requirements of Table 710-4.

710.2.3 Mineral Filler, Mineral Admixture and Anti-Stripping Agent:

Mineral filler shall conform to the requirements of AASHTO M-17. The amount of mineral filler shall be determined by the mix design.

Mineral admixture or anti-stripping agent shall be dry hydrated lime, conforming to the requirements of ASTM C-207 Type N, or Portland cement conforming to Section 725. The amount of hydrated lime or Portland cement used shall be determined by the mix design.

710.5.2 Handling and Storage of Aggregate: Aggregate shall be stockpiled so that segregation and contamination are minimized. Dividers of sufficient size to prevent intermingling of stockpiles shall be provided. This may be accomplished by sufficient separation of the stockpiles.

Any method of handling or moving the material which may cause the segregation, degradation, contamination or the combining of materials of different gradings or stockpiles shall not be permitted. The affected material will he reprocessed or discarded.

710.5.3 Proportioning: The Contractor or his supplier shall provide documentation by calibration charts or other approved means showing the mineral aggregate, asphalt cement, mineral admixture, mineral filler or anti-stripping agent are being proportioned in accordance with the approved mix design. One set of documentation shall be provided for each 750 tons produced, however not less than one per each time the plant is placed in production. All measuring devices shall be calibrated at least annually by a technician licensed by the Arizona Bureau of Weights & Measures. Copies of the calibration documentation shall be an integral part of the mix design approval process which, if not acceptable, could be cause for rejection of the entire submittal.

If a mineral admixture or anti-stripping agent is added in a drum mix plant, a positive signal system and a limit switch device shall be installed in the plant at the point of introduction of the admixture. The positive signal system shall be placed between the metering device and the mixing drum, and utilized during production, whereby the mixing shall be stopped automatically if the admixture is not being introduced into the mixture.

No fine material which has been collected in the dust collection system shall be returned to the mixture unless the Contractor or his supplier propose in writing to utilize a specific portion of the fines and approved by the Engineer. If used, the fine material shall be metered at a uniform rate into the mixture.

When mineral filler is added to the asphalt mix, it shall be added prior to the asphalt cement. Also, the method of adding the mineral filler shall produce a uniform distribution without loss or waste of the material within the mixture. The amount of mineral filler shall be determined by the mix design.

When hydrated lime or Portland cement is added as a mineral admixture or anti-stripping agent, the method of adding the lime or cement shall be such that the aggregate will be uniformly coated. The amount of line or cement used shall be determined by the mix design.

When mineral aggregate, asphalt cement, mineral filler, mineral admixture or anti-stripping agent are proportioned by weight, the scales used in batching the materials, all boxes, hoppers, buckets or similar receptacles used for weighing materials, shall be insulated against the vibration or movement from the rest of the plant. Errors in weighing, while the entire operation is running, shall not exceed two percent for any setting nor one and one-half percent for any batch. The asphalt shall be weighed in a heated, insulated bucked suspended from a springless dial scale or load cell system. The material, if required, shall be added separately and in a thoroughly dry condition.

When mineral aggregate, asphalt cement, mineral filler, mineral admixture and/or anti-stripping agent are proportioned by volume, the correct portion of each mineral aggregate size introduced into the mixture shall be drawn from the storage bins by an appropriate type of continuous feeder. The feeder shall supply the correct amount of mineral aggregate in proportion to asphalt cement. Furthermore, the feeder shall allow each mineral aggregate size to be adjusted separately. The continuous feeder for the mineral aggregate shall be mechanically or electrically actuated.

If fine material sticks to the sides of the bin, the bin shall be equipped with a vibrating unit which will effectively vibrate the side walls of the bin and prevent any hang up of segregated sizes while the plant is operating.

All scales or temperature devices shall be so located that the mixer operator and the plant inspector have an unobstructed close-up-view of the indicating or registering devices. The scales shall indicate the true net weight without the application of any factor. The dial for dial type scales shall not be less than 12 inches in diameter and the figures thereon shall be clearly legible.

710.5.4 Drying and Heating: The mixing plant shall be provided with accurate mechanical means for feeding the aggregates from the stockpiles or bunkers into the drier at such a rate that a uniform production and temperature of dried aggregates will be obtained. Drying and heating shall be accomplished in such a manner as to preclude the mineral aggregate from becoming coated with fuel oil or carbon.

A recording pyrometer or other approved recording thermometric instrument, sensitive to a rate of temperature change not less than 6° C. per minute, shall be placed at the discharge chute of the drier to automatically record the temperature of the asphalt concrete or mineral aggregate. When requested, a copy of the recording shall be given to the Engineer at the end of each shift. The mixing temperature of the asphalt mix shall not exceed ±10° C. of the mixing temperature stated on the approved mix design.

Heating of filler material will not be required.

Drying shall be to the extent that the moisture content of the asphalt concrete mix, when placed on grade immediately behind the paver, shall not exceed one half of one percent(0.5 %). The moisture content shall be determined in accordance with Arizona Test Method 406.

The drier shall be equipped with a dust collector system capable of removing objectionable or excess dust from the aggregate. The dust collector shall comply with the Maricopa County Bureau of Air Pollution Control Rules and Regulations as adopted by the County Board of Supervisors and applicable State laws or local ordinances.

710.5.5 Mixing: The production of the plant shall be governed by the rate required to obtain a thorough and uniform mixture of the materials not to exceed the rated capacity of the plant. Mixing shall continue until the uniformity of coating, when tested in accordance with the requirements of AASHTO T-195, is at least 95 percent.

The mineral aggregate, asphalt cement, mineral filler, mineral admixture and/or anti-stripping agent shall be mixed at a central mixing plant of the batch type mixer, continuous type mixer, or drum type mixer, as the Contractor or his supplier may elect. The plant shall be maintained and operated in accordance with the manufacturer's recommendations.

Pug mill mixers shall be of a twin-shaft type and shall be operated at the speed recommended by the manufacturer. It shall be equipped with paddles of sufficient size and number to deliver a thorough and uniform mixture. Should the paddles or other parts of the pug mill become worn to such extent as to adversely affect the quality of the mixing or allow leakage from the discharge gate, such parts shall be promptly replaced.

The amount of asphalt cement to be added to the mineral aggregate shall be as specified in the mix design. The asphalt cement shall be added at the temperature specified in the mix design or in Section 711.

The asphalt pump shall be a positive displacement type pump. The use of a pressure relief valve will not be permitted. The plant shall be equipped with an indicating meter between the pump and spray, and the meter shall be in good working condition and accurately record the volume of material pumped. All pipes, bins, fittings and meters shall be steam jacketed or otherwise properly insulated. The asphalt storage system shall be equipped with a device for automatic plant cut-off when the intake of the positive displacement pump is not working under positive pressure. Sampling ports shall be installed at the discharge end of the metering device for use by the Engineer in obtaining samples of the material.

A positive signal system shall be provided to indicate the low level of mineral aggregate in the bins of the batch plant and as the level of material in any one bin approaches the strike off capacity of the feed gate, the device will automatically and promptly close down the feed of all materials to the mixer. The plant will not be permitted to operate unless this signal system is in good working condition. Each bin shall have an overflow chute or divider to prevent material from spilling into adjacent bins or waste excess material.

The temperature of the asphalt concrete upon discharge from the mixer shall not exceed the maximum mixing temperature specified in the mix design. If the asphalt concrete is discharged from the mixer to a hopper, the hopper shall be constructed so that segregation of the asphalt concrete will be minimized.

710.5.6 Temporary Storage of Bituminous: Use of surge bins or storage bins for temporary storage of hot bituminous mixtures will be permitted. The bituminous mixture may be stored in insulated and heated storage bins for a period of time not to exceed 12 hours. If the Engineer determines that there is an excessive amount of heat loss, segregation and/or oxidation of the mixture due to temporary storage, use of surge bins or storage bins will be discontinued.

710.5.7 Plant Inspection: Each hot mix asphalt facility, producing under this specification, shall be inspected biannually by a Civil Engineer registered in the State of Arizona and knowledgeable in batch plant operation. The Civil Engineer shall be independent and not an employee of the Contractor or the supplier. This inspection shall be performed in accordance with the "Certification of Hot Mix Asphalt Production Facilities" by the Arizona Rock Products Association. A copy of the current certification shall be an integral part of the mix design which, if found unacceptable, could be cause for rejection of the entire submittal.

710.6 TRANSPORT AND DELIVERY REQUIREMENTS:

The beds of the trucks, utilized to transport asphalt concrete, shall be coated with a release agent. The release agent shall be certified to be non-reactive with the bituminous material. If, in the opinion of the Engineer or plant operator, there is an excess of release agent applied to the truck bed, the driver will be required to raise the bed and drain off the excess agent. Diesel fuel will not be acceptable as a releasing agent.

Mixtures shall be delivered to the job site without segregation of the ingredients and within the lay down temperature range specified in the mix design.

At the time of delivery to the job site, the Engineer shall be provided with an legible delivery ticket that has the weight of the material from a measuring device, which has been certified by the Arizona Department of Weights and Measures. The delivery ticket shall contain the following information:

(1) Date; (2) Supplier's name; (3) Plant location and/or plant number; (4) Ticket Number; (5) Truck Number; (6) Contractor's name; (7) Project name and/or location; (8) Production code/description with percent asphalt; (9) Mineral filler/additive and/or anti-stripping agent and percent; (10) Temperature at batching; (11) Time of batching, arrival and unloading; (12) Material weight or vehicle weight with and without material; and (13) Weight of accumulative loads.

End of Section

SECTION 711

PAVING ASPHALT

711.1 GENERAL:

The asphalt shall be produced from crude asphalt petroleum or a mixture of refined liquid asphalt and refined solid asphalt. It shall be free from ad-mixture with any residues obtained by the artificial distillation of coal, coal tar, or paraffin oil and shall be homogeneous and free from water.

Asphalt shall not be heated during the process of its manufacture, storage, or during construction so as to cause injury as evidence by the formation of carbonized particles.

711.2 TESTING REQUIREMENTS:

Paving asphalt shall be classified by the Performance Grading System and shall conform to the requirements set forth in Table 711-1

TABLE 711-1

PERFORMANCE GRADING SYSTEM

	PG 64-10	PG 70-10	PG 76-10	PG 82-10
Original Asphalt				
Viscosity, ASTM D 4402 (1) Max. 3 Pa-s Test Temp, °C	135	135	135	135
Dynamic Shear TP5 (2) G*/Sin δ, Min., 100 kPa Test Temp. @ 10 rad/s, °C	64	70	76	82
Rolling Thin Film Oven Residue (T240)				
Dynamic Shear TP5 G*/sin δ, Min., 2.20 kPa Test Temp. @ 10 rad/s, °C	64	70	76	82
Pressure Aging Vessel Residue (PP1)				
PAV Aging Temperature, °C	110	110	110	110
Dynamic Shear TP5 G*/sin δ, Min., 5000 kPa Test Temp. @ 10 rad/s, °C	31	34	37	40

On all Grades Flash Point Temperature T48: Minimum 230 °C and Mass Loss, maximum 1.00 percent.

(1) This requirement may be waved at the discretion of the specifying agency if the supplier warrants that the asphalt binder can be adequately pumped and mixed at temperatures that meet all applicable safety standards.

(2) For quality control of unmodified asphalt cement production, measurement of the viscosity of the original asphalt cement may be substituted for dynamic shear measurements of G*/sin(δ) at test temperatures when the asphalt is a Newtonian fluid. Any suitable standard means of viscosity measurement may be used, including capillary or rotational viscometry (T210 or T202).

Design Note: Performance Grade Asphalts are selected for certain reliabilities with respect to high and low pavement temperatures. The specified characteristics are based upon a loading frequency that approximates vehicle speeds of approximately 90 km/hr. Since all binders are frequency dependent, the designer may consider increasing the high temperature requirement for slow transient and standing loads, such as intersection loading. The high temperature requirement may also be increased for excessive numbers of equivalent single axle loads.

711.3 TEST REPORT AND CERTIFICATION:

At the time of delivery of each shipment of asphalt, the supplier supplying the material shall deliver to the purchaser 3 certified copies of the test report which shall indicate the name of the refinery and supplier, type and grade of asphalt delivered, date and point of delivery, quantity delivered, delivery ticket number, purchase order number, and results of the above specified tests. The test report shall be signed by an authorized representative of the supplier certifying that the product delivered conforms to the specifications for the type and grade indicated.

Until the certified test reports and samples of the material have been checked by the Engineer, that material will be only tentatively accepted by the Contracting Agency. Final acceptance will be dependent upon the determination of the Engineer that the material involved fulfills the requirements prescribed. The certified test reports and the testing required in connection with the reports shall be at no additional cost to the Contracting Agency.

711.4 TEMPERATURES:

Unless otherwise specified in these specifications or in the special provisions, the various grades of paving asphalt shall be applied within the temperature range indicated in Table 711-2. The exact temperature shall be determined by the Engineer.

At no time, after loading into a tank car or truck for transportation from the refinery to the purchaser, shall the temperature of the paving asphalt be raised above 400 degrees F.

TABLE 711-2

APPLICATION TEMPERATURE OF PAVING ASPHALTS

Grade of Material	Pug Mill Mixing Asphalt Temperature °F.		Distributor Application Temperature °F.	
	Min.	Max.	Min.	Max.
PG 64-10	275	325	300	390
PG 70-10	275	325	300	390
PG 76-10	290	340	310	390
PG 82-10	290	340	315	390

Paving asphalt shall be heated in such a manner that steam or hot oils will not be introduced directly into the paving asphalt during heating.

711.5 DISTRIBUTING EQUIPMENT:

Distributing Equipment shall meet the requirements of Section 330.

711.6 CONVERSION OF QUANTITIES:

When pay quantities of paving asphalt are determined from volumetric measurements, the volumetric measurement at any temperature shall be reduced to the volume the material would occupy at 60 degrees F. in accordance with ASTM D-1250. In converting volume to weight, the computations shall be based on Table 711-3.

TABLE 711-3

PAVING ASPHALT QUANTITY CONVERSION

Grade of Material	Gals. Per Ton at 60 ° F.	Lbs. Per Gal. at 60° F.
PG 64-10	235	8.5
PG 70-10	235	8.5
PG 76-10	230	8.7
PG 82-10	230	8.7

End of Section

SECTION 712

LIQUID ASPHALT

712.1 GENERAL:

Liquid asphalt shall consist essentially of either natural crude or refined asphalt petroleum, or a residual product thereof.

The liquid asphalt shall be medium curing product designed by the letters MC, and shall consist of a paving asphalt conforming to the provisions in Section 711, fluxed or blended with a kerosene type solvent.

The asphalt shall not be heated during the process of its manufacture or during construction so as to cause injury as evidence by the formation of carbonized particles.

712.2 TEST REQUIREMENTS:

The liquid asphalt shall consist of materials specified above and shall conform to the requirements set forth in Table 712-1 and/or Table 712-2.

712.3 TEST REPORTS AND CERTIFICATIONS:

Test reports and certifications will be furnished in accordance with Section 711.

712.4 CONVERSION OF QUANTITIES:

When pay quantities of liquid asphalt are determined from volumetric measurements, the volumetric measurement at any temperature shall be reduced to the volume the material would occupy at 60 degrees F. in accordance with ASTM D-1250. In converting volume to weight, the computations shall be based on the data contained in Table 712-3.

TABLE 712-1

AASHTO M-82 TABLE 1

	MC-30		MC-70		MC-250		MC-800		MC-3000	
	Min.	Max.	Min.	Max.	Min.	Max.	Min.	Max.	Min.	Max.
Kinematic Viscosity at 60°C (140°F) centistokes	30	60	70	140	250	500	800	1600	3000	6000
Flash point (Tab, open-cup), degrees C° (F)	38 (100)	...	38 (100)	...	66 (150)	...	66 (150)	...	66 (150)	...
Water percent	...	0.2	...	0.2	...	0.2	...	0.2	...	0.2
Distillation test: Distillate percentage by volume of total distillate to 360°C (680°F)										
to 225°C (437°F)	...	25	0	20	0	10	...	...	...	...
to 260°C (500°F)	40	70	20	60	15	55	0	35	0	15
to 315°C (600°F)	75	93	65	90	60	87	45	80	15	75
Residue from distillation to 360°C (680°F) Volume percentage of sample by difference	50	...	55	...	67	...	75	...	80	...
Tests on residue from distillation:										
Absolute viscosity at 60°C (140°F) poises	300	1200	300	1200	300	1200	300	1200	300	1200
Ductility, 5 cm/min, cm.	100	...	100	...	100	...	100	...	100	...
Solubility in Trichloroethylene, percent	99	...	99	...	99	...	99	...	99	...

TABLE 712-2

ASTM D-2026
Requirements for Cutback Asphalt (Slow-Curing Type)

Designation	SC-70		SC-250		SC-800		SC-3000	
	Min.	Max.	Min.	Max.	Min.	Max.	Min.	Max.
Kinematic viscosity at 140°F (60°C), Cst	70	140	250	500	800	1600	3000	6000
Flash point (Cleveland open cup), °F (°C)	150 (66)	...	175 (79)	...	200 (93)	...	225 (107)	...
Distillation lost: Total distillate to 680°F (360°C), volume %	10	30	4	20	2	12	...	5
Solubility in trichloroethylene, %	99.0	...	99.0	...	99.0	...	99.0	...
Kinematic viscosity on distillation residue at 140°F (60°C), St	4	70	8	100	20	160	40	350
Asphalt residue:								
Residue of 100 penetration, %	50	...	60	...	70	...	80	...
Ductility of 100 penetration residue at 77°F (25°C), cm*	100	...	100	...	100	...	100	...
Water, %	...	0.5	...	0.5	...	0.5	...	0.5

*NOTE — If the ductility at 77°F (25°C) is less than 100, the material will be acceptable if its ductility at 60°F (15.5°C) is more than 100.

TABLE 712-3

LIQUID ASPHALT QUANTITY CONVERSION

Grade of Materials	Gals. Per Ton at 60 Degrees F.	Lbs. Per Gals. at 60 Degrees F.
70	253	7.90
250	249	8.03
800	245	8.16
2000	241	8.30

End of Section

SECTION 713

EMULSIFIED ASPHALTS

713.1 GENERAL:

Emulsified asphalts shall be composed of a paving asphalt base uniformly emulsified with water and an emulsifying or stabilizing agent. It shall be homogeneous throughout and if stored, shall show no separation of ingredients within 30 days after delivery. Emulsified asphalt shall be classified as quick setting, rapid setting, medium setting or slow setting type in either anionic or cationic emulsions.

Emulsified asphalt shall be specified as follows:

a) Penetration type and high viscosity type emulsion shall be designated by the letters RS-Rapid Setting.

b) Mixing type emulsion shall be designated by the letters SS-Slow Setting, MS-Medium Setting and QS-Quick Setting.

713.2 TESTING REQUIREMENTS:

The emulsified asphalt shall conform to the requirements set forth in Table 713-1.

713.3 TESTS REPORT AND CERTIFICATION:

Test reports and certifications shall be made in accordance with Section 711.

TABLE 713-1

REQUIREMENTS FOR ANIONIC EMULSIFIED ASPHALT (Specification Designation)

Type	Rapid-Setting				Medium-Setting						Slow-Setting			
Grade	RS-1		RS-2h		MS-1		MS-2		MS-2h		SS-1		SS-1h	
	Min.	Max.	Min.	Max.	Min.	Max.	Min.	Max.	Min.	Max.	Min.	Max.	Min.	Max.
Tests on emulsions Viscosity, Saybolt Furol at 77°F (25°C.), sec	20	100			20	100	100		100		20	100	20	100
Viscosity, Saybolt Furol at 122°F (50°C.), sec			75	400										
Settlement, 24 hour day, percent		1		1		1		1		1		1		1
Demulsibility, 35 ml. 0.02 N. $CaCl_2$, percent	60		60											
Coating ability and water resistance														
Coating, dry and aggregate					good		good		good					
Coating, after spraying					fair		fair		fair					
Coating, wet aggregate					fair		fair		fair					
Coating, after spraying					fair		fair		fair					
Cement mixing test, percent												2.0		2.0
Sieve test, percent		0.10		0.10		0.10		0.10		0.10		0.10		0.10
Residue by distillation, percent	55		63		55		65		65		57		57	
Tests on Residue from Distillation Test:														
Penetration 77°F (25°C), 100g, 5 s	100	200	40	90	100	200	100	200	40	90	100	200	40	90
Ductility, 77°F (25°C), 5 cm/min. cm.	40		40		40		40		40		40		40	
Solubility in trichloroethylene, %	97.5		97.5		97.5		97.5		97.5		97.5		97.5	

TABLE 713-1 (continued)

REQUIREMENTS FOR ANIONIC/CATIONIC EMULSIFIED ASPHALT
(Specification Designation)

Type	Quick Setting		Rapid Setting		Medium Setting		Slow Setting	
Grade	QSH	CQSH	CRS-1	CRS-2h	CMS-2	CMS-2h	CSS-1	CSS-1h
	Min Max	Min Max	Min Max	Min Max	Min Max	Min Max	Min Max	Min Max
Tests on emulsions:								
Visc., Saybolt Furol at 77°F., sec.	20 100						20 100	20 100
Visc., Saybolt Furol at 122°F., sec			20 100	100 400	50 450	50 450		
Settlement, 24 hour day, percent			1	1	1	1	1	1
Demulsibility, 35 ml 0.8% sodium dioctyl sulfosucinate, %			40	40				
Coating ability and water resistance:								
Dry aggregate					Good	Good		
after spraying					Fair	Fair		
wet aggregate					Fair	Fair		
after spraying					Fair	Fair		
Particle charge test	Negative	Positive	Positive	Positive	Positive	Positive	Positive	Positive
Sieve Test, %	0.10	0.10	0.10	0.10	0.10	0.10	0.10	0.10
Cement Mixing test, %							2.0	2.0
Distillation:								
Oil distillate, by volume of emulsion, %			3	3	12	12		
Residue, %	57	57	60	65	65	65	57	57
Test on Residue from distillation test:								
Penetration, 25°C (77°F), 100 g. 5 sec.	40 110	40 110	100 250	40 90	100 250	40 90	100 250	40 90
Ductility, 25°C (77°F.) 5 cm per min, cm.	40	40	40	40	40	40	40	40
Solubility in trichloroethylene, %	97.5	97.5	97.5	97.5	97.5	97.5	97.5	97.5
Storage Stability Test, 1 day, %	1	1						

*If the Particle Charge Test result is inconclusive for CSS-1 and CSS-1h, material having a maximum pil value of 6.7 will be accepted.

713.4 TEMPERATURES:

Unless otherwise specified, the various grades of emulsified asphalt shall be applied at temperatures within the limits specified in Table 713-2 the exact temperature to be determined by the Engineer. Emulsified asphalt shall be reheated if necessary. But at no time, after loading into a tank car or truck for transportation to the work site, shall the temperature of the emulsion be raised above the maximum temperature shown in Table 713-2. During all reheating operations, the emulsified asphalt shall be agitated to prevent localized overheating. Emulsified asphalt shall not be permitted to cool to a temperature of less than 40 degrees F.

TABLE 713-2

APPLICATION TEMPERATURE OF EMULSIFIED ASPHALT

Grade of Emulsified Asphalt	Minimum °F.	Maximum °F.
RS-1, MS-1, SS-1, SS-1h, CSS-1, CSS-1h	70 F.	140 F.
RS-2, MS-2, MS-2h, CRS-1, CRS-1h, CRS-2h, CMS-2, CMS-2h, QSH, CQSH	125 F.	185 F.

Emulsified asphalt shall be heated in such a manner that steam or hot oils will not be introduced directly into the emulsified asphalt during heating.

713.5 CONVERSION OF QUANTITIES:

When pay quantities of emulsified asphalt are determined from volumetric measurements, the volumetric measurement at any temperature shall be reduced to the volume the material would occupy at 60 degrees F. in accordance with ASTM D-1250. In converting volume to weight, the computations shall be based on Table 713-3.

TABLE 713-3

EMULSIFIED ASPHALTS QUANTITY CONVERSION

Grade of Material	Gals. Per Ton at 60°F.	Lbs. Per Gal. at 60°F.
All grades	240	8.33

End of Section

SECTION 715

SLURRY SEAL MATERIALS

715.1 GENERAL:

Slurry seal shall consist of a properly proportioned mixture of asphalt emulsion, mineral fillers, and water.

All material source must be approved prior to their use. The Contractor will submit material samples at least seven days prior to start of construction. When requested, additional samples will be furnished during the construction period at no cost to the Contracting Agency. This is a non-pay item.

715.2 AGGREGATE:

715.2.1 Mineral Filler: Mineral filler shall consist of finely divided matter, such as hydrated lime, portland cement, limestone dust or fly ash, conforming to the requirements of ASTM D-4318. Mineral filler shall be used only when needed to reduce the setting time, to improve the workability or to reduce the stripping characteristics of the aggregate emulsion mixture. The minimum amount of the required filler will be used and it will be considered as part of the blended aggregate. The expected range shall be between .25% and 2.0% by weight of aggregate.

715.2.2 Mineral Aggregate: Mineral aggregate shall consist of sound and durable sand and/or crushed stone as per MAG Section 701 combined with an approved mineral filler where it is required. The mineral filler will be considered as part of the blended aggregate. The material shall be non-plastic (ASTM D-4318) with a sand equivalent (ASTM D-2419) of at least 50. The abrasion loss (ASTM C-131) shall not exceed 35 percent. Ninety percent of the aggregate retained on the No. 50 sieve shall have at least one fractured face. The gradation of material aggregate shall conform to Table 715-1.

715.3 BITUMINOUS MATERIAL:

The bituminous emulsion used for seal coating shall be quick setting or slow setting as per Section 713.

2The quick setting emulsified asphalt shall be of the anionic or cationic quick set type such as QSH or CQSH that will react to chemically active mineral fillers such as portland cement in such a way that the applied slurry mixture can support controlled traffic in 45-60 minutes after application. The amount of chemically active filler shall be determined by mix design and field performance.

Quick Set Emulsion Mix Properties

Slurry Seal Mixing Test, 70-85 degree F. Sec.	120 Sec. Min.
Slurry Seal Setting Test, 70-85 degree F. (1 hour cure)	No Brown Stain
Slurry Seal Water Resistance Test (70-85 degree F. 30 minute cure)	No More Than Slight Discoloration

Slow setting emulsion may be used when traffic control is not a critical item.

Placement of slurry seal is temperature dependent and should be tested under field conditions.

715.4 WATER:

Water shall be portable and be compatible with the slurry ingredients used.

715.5 TEST CERTIFICATES & REPORTS:

Test certificates and reports for the bituminous material shall be furnished in accordance with Section 711.

715.6 CONVERSION OF QUANTITIES:

Volumetric conversions shall be accomplished in accordance with Section 713.

TABLE 715-1			
SLURRY SEAL AGGREGATE			
SIEVE SIZE	**Type I % PASSING**	**Type II % PASSING**	**Type III % PASSING**
⅜	100	100	100
No. 4	100	85/100	70/90
No. 8	90/100	65/90	45/70
No. 16	65/90	45/70	28/50
No. 30	40/60	30/50	19/34
No. 50	25/42	18/30	12/25
No. 100	15/30	10/21	7/18
No. 200	10/20	5/15	5/15
Emulsified Asphalt content as a % of Dry Wt. of Aggregate (approx.) ASTM D-3910 (W.T.A.T. TEST)	18	16	14
Residual Asphalt Range requirements % of Dry Wt. of Aggregate ASTM D-3910 (W.T.A.T. TEST)	10-16	7.5-13	6.5-12
Pounds of Aggregate per Square Yard (approx.)	8-10	12-18	18-25

End of Section

SECTION 716

COVER MATERIAL

716.1 GENERAL:

Cover material "chips" shall consist of precoated or uncoated aggregate spread in conjunction with a bituminous or asphalt-rubber seal coat.

716.2 STONE CHIPS:

716.2.1 General: The stone chips shall be crushed rock as per Section 701 except as modified below.

716.2.2 Tests: The chips' weight loss shall not exceed 40 percent of 500 revolutions where tested in accordance with ASTM C-131.

The chips shall not show a loss in excess of 12 percent when tested in accordance with AASHTO T-104 (Sodium Sulfate Soundness)

A minimum of 75 percent of the material, by weight, retained on the No. 8 sieve, shall have at least one fractured face produced by the crushing operation.

716.2.3 Gradation: When tested in accordance with ASTM C-136 and C-117, gradation shall comply with Table 716-1 and/or Table 716-2.

TABLE 716-1

COVER MATERIAL (CHIPS) GRADATION
For Low Volume Traffic Only

Sieve Size	Percent Passing
½"	100
⅜"	97/100
¼"	70/100
#8	0-5
#200	0-2

TABLE 716-2

COVER MATERIAL (CHIPS) GRADATION
For High Volume Traffic

Sieve Size	Percent Passing
¾"	100
½"	97/100
⅜"	70/100
¼"	0-10
#8	0-5
#200	0-2

716.3 PRECOATED CHIPS:

When specified, the aggregate shall be heated and precoated with asphalt cement as specified in Section 711. The quantity of bituminous material used shall not be less than 0.30 percent or greater than 0.70 percent of the combined weight of the bituminous material and the aggregate.

The final percentage of asphalt used for coating shall be as directed by the Engineer. The precoating shall be done in a pug mill mixing facility for a minimum of 30 seconds or until the asphalt is present on the aggregate, which ever is greater. With approval of the Engineer, a drum mix plant may be used, however, the end result shall produce a uniform, dust free product.

716.4 UNCOATED CHIPS:

When liquid or paving grade asphalt is used as the bituminous binder, the uncoated chips shall not contain moisture in excess of a saturated surface dry condition.

When emulsified asphalt is used as the bituminous binder, the uncoated chips shall be surface wet but free from running water.

End of Section

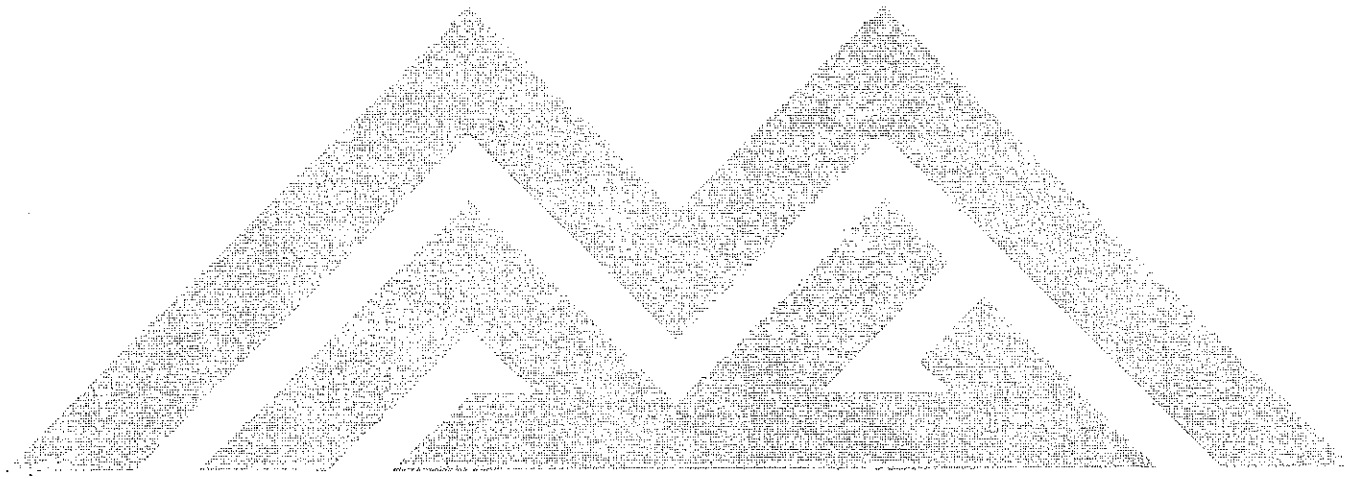

SECTION 717

ASPHALT-RUBBER

717.1 GENERAL:

Asphalt rubber shall consist of a properly proportioned mixture of hot paving grade asphalt, ground vulcanized rubber and a hydrocarbon dilutent combined by heating into a visco-elastic composition.

There are two approved production processes, Method A and Method B. Prior to any placement, the Contractor will provide a certification from the supplier that the asphalt-rubber components conform to the material requirements for either Method A or B.

717.2 MATERIAL - METHOD A:

717.2.1 Paving Grade Asphalt: The paving grade asphalt used shall meet the requirement of Section 711.

717.2.2 Extender Oil: The extender oil shall be a resinous, high flash point, aromatic hydrocarbon conforming to the following test requirements:

Viscosity, 55 U, at 100 degree F. (ASTM D-88) 2500 min.

Flash point, COC, degrees F. (ASTM D-92) 390 min.

Molecular Analysis (ASTM D-2007):
Asphaltines, percent by weight 0.0 max,
Aromatics, percent by weight 55.0 min.

717.2.3 Ground Vulcanized Rubber: The rubber shall be vulcanized rubber scrap specially selected so that the natural rubber content is at least 25 percent by total weight. It shall be free from fabric, wire or other contaminating material. After grinding, it must be a dry, free-flowing material. Not more than 4 percent by weight of a mineral powder (such as calcium carbonate) may be included to prevent sticking or caking of the particle. The dry, free-flowing ground rubber shall meet the following test requirements of Table 717-1.

TABLE 717-1

GROUND VULCANIZED RUBBER GRADATION (ASTM) C-136

Chemical Analysis (ASTM D-297)
Natural Rubber Content, percent by weight 25 min.

Sieve No.	Percent Passing
8	100
30	25-50
50	5-45
100	0-10

717.3 MATERIAL - METHOD B:

717.3.1 Paving Grade Asphalt: The paving grade asphalt used shall meet the requirement of Section 711.

717.3.2 Kerosene:** The kerosene used shall be compatible with the other materials and shall meet the following requirements:

Flash Point - Degrees F. (ASTM D-92)	80 min.
Initial Boiling Point - Degrees F. (ASTM D-850)	350 min.
Dry Point - Degrees F. (ASTM D-850)	450 max.

**WARNING: Kerosene shall not be used in mix design for asphalt rubber hot mix.

717.3.3 Ground Tire Rubber: The rubber shall be 100 percent vulcanized, ground tire rubber. It shall be free from fabric, wire or other contaminating material. After grinding, it must be a dry, free-flowing material with a specific gravity of 1.15 + 0.05. Not more than 4 percent by weight of a mineral powder (such as calcium carbonate) may be included to prevent sticking or caking of the particles. The gradation shall be in accordance with Table 717-2.

TABLE 717-2

GROUND TIRE RUBBER GRADATION (ASTM C-136)

Sieve No.	Percent Passing
8	100
10	95-100
30	0-10
50	0-2

End of Section

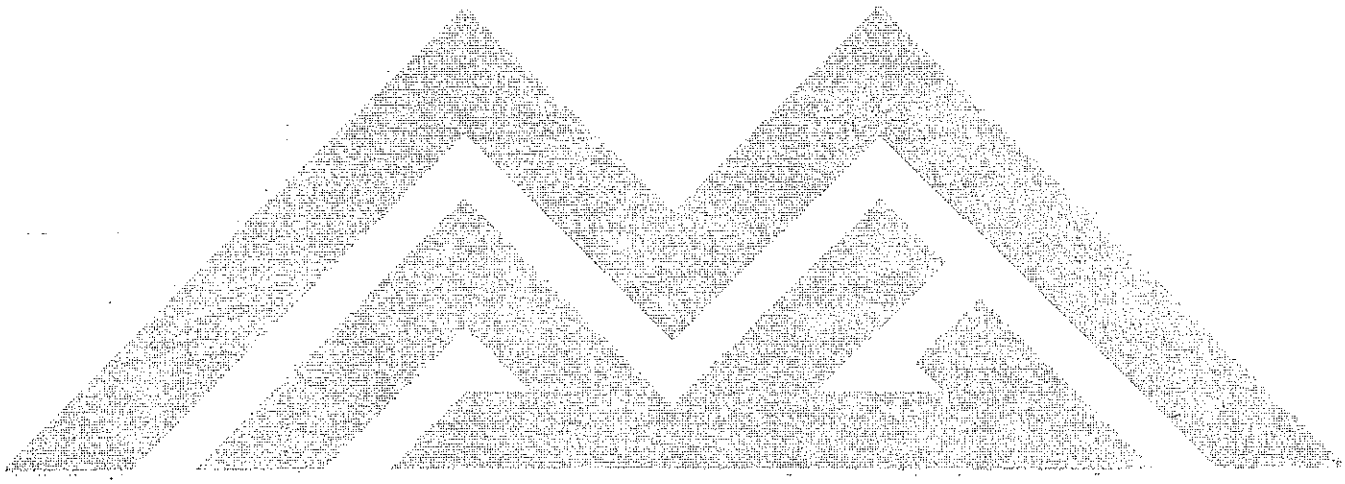

SECTION 718

PRESERVATIVE SEAL FOR ASPHALT CONCRETE

718.1 GENERAL:

Asphalt concrete preservative seal shall be one of the following types or equal, with typical application rates.

Type A — Petroleum resin-oil base emulsion. Applied at 0.05 to 0.10 gallons per square yard, diluted.

Type B — Petroleum Hydrocarbon emulsion. Applied at 0.05 to 0.20 gallons per square yard, diluted.

Type C — Gilsonite and tall oil pitch emulsion. Applied at 0.10 to 0.15 gallons per square yard, diluted.

Type D — Polymer Modified B or C
Applied at 0.10 to 0.20 gallons per square yard or as specified by the manufacturer.

718.2 TEST METHODS AND REQUIREMENTS:

Preservative seal shall meet Type A, B, or C on Table 718-1 by certification from the manufacturer. Type D will be certified by methods established in special provisions.

TABLE 718-1

PRESERVATIVE SEAL SPECIFICATIONS

Property and Test Method		Type A	Type B	Type C
Viscosity @ 77 F SFS	ASTM D244	15-40	25-150	10-100
Residue	ASTM D244	60-65	62 Min	30 Min
Sieve Test	ASTM D244	0.10 Max	0.10 Max	0.10 Max
Particle Test	ASTM D244	Positive	Positive	Positive
Cement Mixing	ASTM D244		2.0 Max	
5 Day Settlement	ASTM D244		2.0 Max	5.0 Max
Tests on Residue From ASTM D-244				
Viscosity c.st @ 140°F	ASTM D445	100-200		
c.st @ 140°F	ASTM D2170		1,000-9,500	
Flash Point	ASTM D-92			450°F
Solubility in Trichlorethyone	ASTM D2042			97.5 Min
RTFO Weight Change	ASTM D2872			2.5 Max
Specific Gravity	ASTM D-70			0.98 Min
n-Pentane Insolubles	ASTM D2007			15 Min
Polar Compounds	ASTM D2007			25 Min
Aromatic	ASTM D2007			15 Min
Saturates	ASTM D2007			10 Max
Asphaltenes	ASTM D2006(74)	0.75 Max	11.0 Max	
Maltenes Ratio	ASTM D2006(74)	0.3 - 0.5	0.7 - 1.4	
PC/S Ratio	ASTM D2006(74)			
Type A Maltenes Dist Ratio	$\frac{N + A1}{P + A2}$	ASTM D2006 (74)		
Type B Maltenes Dist Ratio	$\frac{PC + A1}{S + A2}$	ASTM D2006 (74)		

SECTION 719

RECYCLED ASPHALT CONCRETE HOT MIXED

719.1 GENERAL:

Recycled asphalt concrete (RAC) shall consist of reclaimed asphalt pavement, new aggregate and paving asphalt and/or recycling agent. This mixture shall be combined at a central mixing plant to provide a homogenous, workable product. This product shall meet the requirement of Section 710, based on the type specified, for aggregate gradation, asphalt grade and asphalt content.

Prior to the use of RAC on any project, the Contractor shall notify the Engineer of his intentions and shall make available the test reports required in Section 709 and a mix design as required by this section. Unless written authorization is given by the Engineer, RAC will not be used in the surface course or single course pavement. If the Contractor fails to comply with the above procedures or with the intent of Section 709 and this section, the RAC will be removed and replaced with asphalt concrete at no cost to the Contracting Agency.

When the amount of RAP is 15 percent or less of the total mix, the supplier shall maintain a job mix formula at the plant. The formula shall be based on current test data and approved by the Engineer.

When the amount of RAP to be added is over 15 percent of the total mix, a job mix formula and supporting test data shall be submitted to the Engineer for approval at least 8 working days prior to use. The supporting test data for the RAC shall include the results of tests for stability, swell, and moisture vapor susceptibility. These tests are in addition to the tests for the RAP stockpile specified in Section 709.

After the job mix formula has been approved, the mixing plant designated and the RAP stockpile(s) approved, the Contractor and/or his Supplier shall not change any of the above or utilize additional mixing plants or stockpiles without prior approval of the Engineer.

719.2 MATERIALS:

719.2.1 Aggregate: New aggregate shall conform to Section 710.

719.2.2 Reclaimed Asphalt Pavement: Shall conform to section 709.

719.2.3 Asphalt: New asphalt shall conform to Section 711.

719.2.4 Mineral Filler: Shall be dry hydrated lime or portland cement.

719.2.5 Recycling Agent (RA): Shall comply with Table 719-1.

TABLE 719-1

RECYCLING AGENTS

TEST	ASTM Test Methods	RA 5 Min	RA 5 Max	RA 25 Min	RA 25 Max	RA 75 Min	RA 75 Max	RA 250 Min	RA 250 Max	RA 500 Min	RA 500 Max
Viscosity at 140°F. (60°C). CST	D2170 or 2171	200	800	1000	4000	5000	10000	15000	35000	40000	60000
Flash Point, COC. F. (°C) Min	D92	400 (204)		425 (218)		450 (232)		450 (232)		450 (232)	
Saturates Wt. % Max	D2007		30		30		30		30		30
Residue from RTFO Oven Test at 325°F. (163°C)	D2872										
Viscosity Ratio[2] Max	_		3		3		3		3		3
RTFO Oven Weight Change ±, %	D2872	4		3		2		2		2	
Specific Gravity	D 70 or D1298	Report		Report		Report		Report		Report	

1. The acceptance of any recycling agent is subject to its ability to develop a RAC binder which will comply with the asphalt grade specified.

2. Viscosity Ratio = $\frac{\text{RTFO Viscosity at 140°F, cSt}}{\text{Original Viscosity at 140°F, cSt}}$

719.3 DEFINITIONS:

(A) RAP Asphalt is the asphalt content as determined by tests prescribed in Section 709.

(B) New Binder is the new asphalt and/or recycling agent added to produce RAC.

(C) RAC Binder is the total asphalt content present in RAC, consisting of RAP asphalt and new binder.

719.4 TEST REQUIREMENTS:

(A) Combined aggregate and RAP, after all processing except the adding of new binder and mineral filler, shall have an unextracted minimum sand equivalent of 50 when tested in accordance with ASTM D-2419 or AASHTO T-176.

(B) The RAC binder shall meet the RTFO residue requirements in Section 711 for the PG grade specified. The viscosity of the RAC binder shall be determined by test performed on the asphalt residue obtained by the Abson-Recovery Method ASTM D-1856 or ADOT Method 511.

(C) The combined grading and RAC binder content shall conform to Section 710. All percentages are based on the weight of dry aggregate only.

719.5 RAC BATCH PLANT METHOD:

A conventional batch plant shall be modified to introduce the RAP at locations other than the dryer by:

(A) Providing a separate RAP storage facility, with direct access to the weight hopper or

(B) Providing for RAP introduction to the hot aggregate elevator; or

(C) Other method approved by the Engineer.

New aggregate shall be dried and heated for a sufficient time in the dryer so that the moisture content will not be greater than 1 percent.

The dryer shall be provided with an approved temperature-indicating device to determine the temperature of the aggregate leaving the dryer. The device shall be mounted independently of other plant components, shall be accurate to the nearest 10 degrees F. (5 degrees C.), and shall be installed in such a manner that a temperature fluctuation of 10 degrees F. (5 degrees C.) in the aggregate will be indicated within 1 minute.

After drying, the aggregates shall be evenly fed to the screens in such quantities as to maintain, in the separate bins, a uniform grading of the materials and a proper balance in the amount of material. The operation of the screens shall be controlled so as to secure a thorough separation of the aggregate sizes.

Each bin shall be provided with an opening to prevent overflow into adjacent bins.

If any time there is a substantial change made in the cold feed to accommodate the demands of a different type of mixture, the hot storage bins shall be emptied and recharged with the correct materials. Discharged materials may be returned to a storage area that contains aggregates of the approximate grading of the discharged material, except when the hot storage bins contain RAP. Discharged material containing RAP shall be returned to a separate stockpile.

719.6 RAC DRIER-DRUM METHOD:

When producing RAC, new aggregate shall be fed indirectly to the mixer at a uniform rate. The RAP shall be introduced into the drier-drum and combined with the hot, new aggregate in such a manner that the RAC is protected from direct contact with the burner flame by means approved by the Engineer. The new binder shall be introduced into the drum after the RAP and the new aggregate have been combined.

A device shall be provided which indicates the temperature of the mixed material leaving the drum. The device shall be accurate to the nearest 10 degree F. (5 degrees C.) and shall be installed in such a manner that temperature changes of 10 degrees F. (5 degrees C.) in the mixed material will be shown within 1 minute.

The burner used for heating the aggregate shall achieve complete combustion of the fuel.

719.7 RAC PROPORTIONING:

719.7.1 RAC Batch Plant Method: When introducing the RAP into the hot aggregate elevator, the conveyors supplying the RAP and new aggregates shall be equipped with belt scales with rate-of-flow indicators to show the rates of delivery of each of these ingredients. The belt scales shall be interlocked to maintain the proper proportion of RAP to new aggregate.

When introducing RAP from a separate storage facility, it shall be fed directly into the weigh hopper.

All materials shall be proportioned by weight. Aggregate scales shall be either a multiple-beam scale, a springless dial-type scale, or a fully automatic solid-state digital strain-gage transducer weighing device having a capacity exceeding 1¼ times the total amount of materials to be weighed in one operation. Each scale gradation shall be approximately 1/1000 of the total scale capacity.

New binder shall be weighed by means of a springless dial scale or a fully automatic solid-state digital strain-gage transducer weighing device having a capacity of not more than 500 pounds (230 kg) with 1-pound (0.5 kg) graduations for mixers with a manufacturer's rated capacity of 4000 pounds (1800 kg) or less, and not more than 1000 pounds (460 kg) with 1-pound (0.5 kg) graduations for mixers with a manufacturer's rated capacity of over 4000 pounds (1800 kg).

When mineral filler is used, it shall be proportioned by weight or volume by a method that uniformly feeds the material within 10 percent of the required amount.

719.7.2 RAC Drier-Drum Method: When producing RAC, the separate conveyor supplying the RAP to the dryer shall be equipped with a belt scale with rate of flow indicator. This belt scale shall be interlocked to maintain the proper proportions of RAP to new aggregate.

New asphalt and RA shall be measured through separate meters calibrated and certified. A pressure indicator shall be installed at each meter and constant pressure shall be maintained. The meter and lines shall be heated and insulated. The storage tanks for new asphalt and RA shall be equipped with a device for automatic plant cutoff when the fluid level in the tank is lowered sufficiently to expose the pump suction line.

The system shall be capable of varying the rates of delivery of the binder. During any day's run, the temperature of the binder shall not vary more than 50 degrees F. (28 degrees C.).

When mineral filler is used, it shall be proportioned by weight or volume by a method that uniformly feeds the material within 10 percent of the required amount.

The feeders for each material in the RAC shall be equipped with devices by which the rates of feed can be determined while the plant is in full operation.

The RAP and the combined new aggregate shall be weighed on separate belt scales. They shall be of such accuracy that, when the plant is operating between 30 percent and 100 percent of belt capacity, the average difference between the indicated weight of the material delivered and the actual weight delivered will not exceed 1 percent of the actual weight for three 2-minute runs. For any of the three individual 2-minute runs, the indicated weight of material delivered shall not vary from the actual weight delivered by more than 2 percent of the actual weight. The actual weight of material delivered shall be determined by a vehicle platform scale or other certified weighing device approved by the Engineer.

The individual belt scales for the RAP and the combined new aggregate, the proportioning meters for the new asphalt and RA, and the other proportioning devices, shall be interlocked so that the rates of feed of the RAP, new aggregate, new asphalt, and RA will be adjusted automatically to maintain the proper proportions. The plant shall not be operated unless this automatic system is operating and in good working condition.

Belt scales and proportioning meters shall be equipped with resettable totalizers, so that the actual weight of asphalt, RA, RAP, and combined aggregates can be determined. The bins containing the mineral filler, if used, shall be equipped with a vibrating unit or other equipment which will prevent any hang-up of material while the plant is operating. Before the quantity of material in any one bin reaches the strike-off capacity of the feed gate, a device shall automatically close down the plant.

When mineral filler is used, a safe and suitable sampling device shall be installed in each feed line or surge tank preceding the proportioning device.

719.7.3 RAC Miscellaneous Requirements: New aggregate consisting of sand, rock dust, and various sizes of aggregates shall be stored separately at the plant and evenly fed to the dryer to ensure a uniform flow of properly combined aggregates. In placing materials in storage or in moving them from storage to the feeder, no method shall be used which may cause segregation, degradation, or the intermingling of different size aggregates. Materials not meeting the gradation requirements shall be discarded or reprocessed to comply with the requirements of Section 710.

End of Section

SECTION 725

PORTLAND CEMENT CONCRETE

725.1 GENERAL:

Portland cement concrete shall be composed of portland cement or portland Pozzolan cement, Pozzolonic Materials, fine and coarse aggregates, water, and, if provided for or allowed, certain admixtures.

All of the materials used for concrete shall be in accordance with these specifications and requirements for the particular material as provided herein.

Weighing and metering devices used for the purpose of proportioning materials shall fulfill requirements as to accuracy and tolerance prescribed by the Weights and Measures Division of the State of Arizona and shall be sealed and certified in accordance with the procedures established by this agency. This certification shall not be over 12 months old and shall be renewed whenever required by the Engineer. When portable plants are set up at a new or temporary location, the scales and scale assembly shall be inspected and certificate issued regardless of the date when the scales were last tested. The Engineer may require the Contractor to run a quick scale check at any time with certified weights furnished by the Contractor and order the scale recertified if necessary.

TABLE 725-1

CONCRETE CLASSES MINIMUM REQUIREMENTS

Class of Concrete	Min. Cement Content Lbs. Per Cu Yard	Minimum Compressive Strength (1)	
		at 14 Days psi	At 28 Days psi
AA	600	3200	4000
A	520	2400	3000
B	470	2000	2500
C	420	1600	2000

(1) As tested in accordance with ASTM C-39. Maximum slump 5 inches when tested in accordance with ASTM C-143.

Class AA concrete shall be used as specified.

Class A concrete shall be used for concrete structures, either reinforced or non-reinforced, and for concrete pavements.

Class B concrete may be used for curbs, gutters and sidewalks.

Class C concrete may be used for thrust blocks, encasements, fill or over-excavation, etc.

725.2 PORTLAND CEMENT:

Cement to be used or furnished under this specification shall be Portland cement, conforming with the requirements of ASTM C-150, Type II, low alkali, or Portland Pozzolan Cement, conforming with the requirements of ASTM C-595, Type IP (MS), low alkali, except when another type including high early strength is specified in the special provisions or shown on the plans. Type V cement (ASTM C-150) shall be specified in the special provisions for use in concrete which will be exposed to contact with soils or waters containing water soluble sulfates (as SO_4) in concentration greater than 0.20% by weight of soil or 1500 PPM in solutions. Pozzolonic materials shall not be used as a directly added ingredient in concrete in combination with Portland Pozzolan Cement.

Cement shall be sampled and tested as prescribed in applicable ASTM specifications. The Contractor shall obtain and deliver to the Engineer a certification of compliance signed by the cement manufacturer, identifying the cement and stating that the cement delivered to the batching site complies with those specifications. When requested by the Engineer, the Contractor shall furnish him with 3 copies of said certification. The cost of furnishing tested cement shall be considered as included in the contract bid price and no additional allowance will be made therefore.

When suitable facilities, as recommended by the Concrete Plant Manufacturer's Bureau, and approved by the Engineer, are available for handling and weighing bulk cement, such facilities shall be used. Otherwise the cement shall be delivered in original unopened sacks that have been filled at the mill and bear the name or brand of the manufacturer. The type of cement, and the weight of cement contained in each sack shall be plainly marked thereon.

Cement shall be stored in such manner as to permit ready access for the purpose of inspection and identification, and so as to be suitably protected against damage by contamination or moisture. Should any lot of bulk cement be delivered to the site show evidence of contamination, the Engineer may require that such lot be removed from the site.

A cement shall not be mixed with any other brand or type unless written permission has first been obtained from the Engineer. All cement used in the manufacture of concrete for any individual structure shall be of the same brand unless otherwise approved by the Engineer.

725.2.1 Pozzolonic Materials: Pozzolonic materials to be used in concrete or furnished under this specification shall conform to the requirements of ASTM C-618.

If an approved pozzolonic material is used, 15 percent by weight of the Table 725-1 minimum portland cement requirements shall be replaced. The replacement ratio shall be 1.2 pounds of pozzolan per pound of replaced portland cement. If the class of concrete is not from Table 725-1, the amount of pozzolanic material used will be 17.5 percent of the combined weight of pozzolanic material and portland cement.

Pozzolans shall be sampled and tested as prescribed in ASTM C-618 and ASTM C-311. The Contractor shall obtain and deliver to the Engineer a certification of compliance signed by the Pozzolan supplier identifying the Pozzolan and stating the Pozzolan delivered to the batching site complies with applicable specifications. The cost of furnishing tested Pozzolan shall be considered as included in the contract bid price and no additional allowance will be made therefore.

Pozzolan material shall be handled and stored in the same manner as portland cement. When facilities for handling bulk Pozzolan are not available, the Pozzolan shall be delivered in original unopened sacks bearing the name and brand of the supplier, the type and source of the Pozzolan, and the weight contained in each sack plainly marked thereon.

A Pozzolan shall not be mixed with any other brand or type unless written permission has first been obtained from the Engineer. All Pozzolan used in the manufacture of concrete for any individual structure shall be of the same type, and from the same source unless otherwise approved by the Engineer.

725.3 AGGREGATES:

Aggregates shall be crushed rock or gravel or a combination thereof and sand conforming to the requirements prescribed in Section 701. Prior to the delivery of the aggregates, the Contractor will be required to furnish samples for testing, and shall notify the Engineer as to when and where they will be available. Thereafter, additional required samples shall be furnished at the expense of the Contractor, but the cost of testing and making the grading analysis will be borne by the Contracting Agency. Samples shall be taken by the Engineer or in the presence of the Engineer.

No method which may cause the segregation, degradation or the combining of materials of different grading shall be used.

725.4 AGGREGATE GRADING:

Aggregates for each batch of concrete to be prepared shall be combined from materials separately stored in the various sizes and gradations as prescribed in Section 701. The relative proportions of each aggregate used will be as required to meet the provisions of this specification and will be the responsibility of the Contractor.

Except where the amount of concrete for any one job is 10 cubic yards or less, various sizes of both coarse and fine aggregate shall be proportioned by weight unless permission to do otherwise has first been obtained from the Engineer. Aggregates that are proportioned by volume shall be measured in containers of known capacity. Regardless of the method employed, either by weight or volume, each individually stored size of aggregate shall be proportioned separately, but not necessarily weighed individually.

The maximum size of the aggregate shall not be larger than one-fifth of the narrowest dimension between forms of the members for which the concrete is to be used, or larger than ¾ of the minimum clear spacing between reinforcing bars.

725.5 WATER:

The amount of water shall be varied in accordance with the percentage of free moisture in the material and the requirements of the workability of the aggregate.

The equipment for measuring and supplying the water in the mixer shall be so constructed and arranged that the amount of water to be added to the mixture can be measured, in gallons or by weight, positively and that the predetermined quantity of water required can be discharged rapidly in one operation into the mixing drum without dribbling. Tanks or other equipment for measuring and discharging water into the mixer shall be sufficiently accurate that the amount of water delivered to the mixer for any batch shall not vary more than 1 percent from the required quantity. Adequate means for determining and checking the accuracy of the equipment shall be provided and made available to the Engineer at all times.

The water used for mixing with concrete shall be potable and free from oil, vegetable matter and other deleterious substances, and shall conform to the following requirements:

Water for prestressed concrete shall not contain chlorides calculated as sodium chloride in excess of 1,000 parts per million nor sulphates calculated as sodium sulphate in excess of 1,000 parts per million nor any sulphates calculated as sulphate in excess of 1,000 parts per million. Water shall not contain an amount of impurities that will cause a change in the time of setting of portland cement of more than 25 percent nor a reduction in the compressive strength of portland cement mortar of more than 5 percent compared to results obtained with distilled water.

725.6 ADMIXTURES:

Admixtures of any type, except as otherwise specified, shall not be used unless written authorization has been obtained from the Engineer.

If an air-entraining agent is authorized, the amount used will be limited to the extent that the amount of entrained air by volume shall not be more than 6 percent. Air-entraining agents complying with AASHTO M-154 or ASTM C-260 will be permitted as long as strength requirements are met. Any admixture shall be measured accurately by mechanical means into each batch by equipment and in a method approved by the Engineer. Any admixtures used shall be included in the bid price for that item.

725.7 PROPORTIONING:

All proportioning equipment shall comply with the standards of the Concrete Plant Manufacturer's Bureau and the certification requirements of the Arizona Rock Products Association. The proportioning shall consist of combining the specified sizes of aggregates, each stored in a separate bin with cement, Pozzolanic Materials, and water as herein provided. Weigh hoppers shall be charged from bins located directly over the weigh hoppers or from conveyor belts. When conveyor belts are used, there shall be a separate belt for each size of aggregate.

Bulk cement shall be weighed in an individual hopper and shall be kept separate from the aggregates until the batch ingredients are released for discharge. The cement hopper shall be attached to a separate scale for individual weighing.

All Pozzolan that is to be incorporated into the concrete as a separate ingredient shall be weighed. When the cement scales are used for weighing both cement and Pozzolan, the cement shall be weighed first. If separate scales are provided, they shall be accurate to ± 0.3 percent of the scale capacity.

Scales utilized in the proportioning device may be of the springless dial-type or of the multiple-beam type.

If the dial-type, the dial shall be of such size and so arranged that it may be read easily from the operating platform.

If the multiple beam-type, the scales shall be provided with an indicator operated by the main beam which will give positive visible evidence of over or under weight. The indicator shall be so designed that it will operate during the addition of the last 400 pounds of any weighing. The over travel of the indicator hand shall be at least ⅓ of the loading travel. Indicators shall be enclosed against moisture and dust.

Weighing equipment shall be as recommended by the Concrete Plant Manufacturer's Bureau and be insulated against vibration or movement of other operating equipment in the plant. When the entire plant is running, the scale reading at cutoff shall not vary from the weight designated by the Engineer more than 1 percent for cement, Pozzolan or Cement Pozzolan, 1½ percent for any size of aggregate, nor 1 percent for the total aggregate in any batch.

When proportioned at a central mixing plant there shall be an approved moisture meter, accurate within ½ percent, installed to indicate the moisture in the fine aggregate.

A concrete mix design carrying the producer's designated mix number of the concrete being furnished under these specifications shall be submitted to the Contracting Agency at least once each year. In the event there is any change in the source of material, another mix design shall be submitted.

725.8 MIXING:

Machine mixing will be required in all cases other than those in which it would obviously prove to be impractical; in which latter event hand mixing will be permitted, only to the extent necessary. Regardless of the method employed, mixing shall be commenced as soon as possible after the cement is placed in contact with the aggregates.

The temperature of materials as charged in the mixer shall be such that the temperature of the mixed concrete at the time it is placed in final position does not exceed 90°F. When the atmospheric temperature at the time of placing concrete is less than 40°F., the temperature of the concrete, as placed, shall not be less than 60°F.

All concrete mixers shall be of such design and construction, and so operated, as to provide a thoroughly and properly mixed concrete in which the ingredients are uniformly distributed.

725.8.1 Paving and Stationary Mixers: Paving and stationary mixers shall comply with the standards of the Concrete Plant Manufacturer's Bureau and the certification requirements of the Arizona Rock Products Association. They shall be equipped with an accurate automatic timing device so designed and constructed as to lock the discharge lever before aggregate, cement and Pozzolan enter the drum, and release such lever only after the specified mixing time has elapsed. The regulation of the setting of said device shall be under the supervision of the Engineer. Water control equipment as described in this specification shall also be provided with each concrete mixer.

Mixers shall be maintained in proper and serviceable working condition, and any part or portion thereof that is out of order, or becomes worn to such extent as to detrimentally affect the quality of mixing, shall be promptly repaired or replaced.

The proper proportions of aggregate, cement, Pozzolan and water for each batch of concrete shall be placed in the mixer, and shall be mixed for a period of not less than 50 seconds after all such materials are in the drum.

The rotating speed at which the mixer shall be operated shall conform to that recommended by the manufacturer.

The total volume of materials mixed in any one batch shall neither exceed the water level capacity of the mixer nor the manufacturer's catalog rated capacity of the mixer.

725.8.2 Transit Mixers: Transit mixers shall be high quality equipment and meet the requirements of the Truck Mixer Manufacturer's Bureau and the certification requirements of the Arizona Rock Products Association. Ready mix concrete shall comply with ASTM C-94 except as herein specified.

The total elapsed time between the addition of water at the batch plant and depositing the complete mix shall not exceed 90 minutes. Each mixer and agitator shall have attached thereto in a prominent place a metal plate or plates, installed by the manufacturer, on which is plainly marked the capacity of the drum in terms of the volume of mixed concrete and the speed of rotation for the agitating and mixing speeds of the mixing drum or blades.

Each mixer shall have an identification number painted on the truck in such a location that it can be easily read from the batching platform.

The total volume of materials introduced into the mixer for mixing purposes shall not exceed the manufacturer's guaranteed mixing capacity. If the concrete so mixed does not meet the uniformity requirements of this section, the amount of materials charged into the mixer shall be reduced.

The rotation speed at which the mixer shall be operated shall conform to that recommended by the manufacturer.

The total volume of materials mixed in any one batch shall neither exceed the water level capacity of the mixer nor the manufacturer's catalog rated capacity of the mixer.

Each batch of concrete placed in the mixer shall be mixed for not less than 70 nor more than 100 revolutions of the drum or blades, at the speed designated by the manufacturer of the equipment as mixing speed. Additional mixing shall be at the agitating speed designated by the manufacturer of the equipment. The revolving of the drum shall be continuous until the concrete is completely emptied from the drum. Before any portion of the materials for any batch of concrete is placed therein, the drum of the mixer shall be completely emptied of the previously mixed batch.

At the time of delivery to the job site, the Engineer shall be provided with a legible weighmaster's certificate (delivery ticket) which shall contain the following information:

Date and Truck Number.

Name of the Supplier.

Name of the Contractor.

Specific designation of job (name and location).

Number of cubic yards in the batch.

Type of cement.

Type of Pozzolan, if any.

Time the transit mixer is loaded.

Amount of water added at the job site at request of receiver, and his signature or initials.

Suppliers' mix design code number.

Type and amount of admixture, if any.

Serial number of the ticket.

The type, capacity and manner of operation of the mixing and transporting equipment for ready-mix concrete shall conform to the current Standards for Operation of Truck Mixers and Agitators of the National Ready-Mixed Concrete Association and the Truck Mixer and Agitators Standards of the Truck Mixer Manufacturer's Bureau. Water shall not be added to the batch during transit. Additional water may be added at the point of discharge to adjust slump providing the slump after such water addition does not exceed the maximum allowed by these specifications and that water so added is mixed into the batch for a minimum of 30 additional revolutions at mixing speed. Loss of cement mortar during discharge which in the opinion of the Engineer would be of sufficient amount to affect the homogeneity of the concrete will be cause for rejection of the load. The Contractor shall be responsible for all concrete to which water is added at the job site.

725.8.3 Hand Mixed Concrete: Hand mixed concrete shall be prepared on a watertight level platform in batches of not to exceed ⅓ cubic yard each. The required amount of coarse aggregate shall first be spread on the platform in an even and uniform layer, over which the proper proportion of fine aggregate shall then be likewise spread. The combined depth of both such layers shall not be greater than one foot. The required quantity of cement shall then be evenly distributed over the fine aggregate; following which the entire batch shall be turned with shovels at least twice before the water is added. The proper amount of water shall then be uniformly sprinkled or sprayed over the batch, which shall thereafter be returned with shovels not less than 3 times before being removed from the platform.

725.8.4 Drybatched Unmixed Concrete: Should the Contractor elect to use drybatched unmixed concrete, an accurate automatic batch weight recorder shall be provided to record the quantities of cement, aggregate and water batched into the containers; the weight of cement shall be recorded on either a separate charge from the aggregate or on the same chart using a separate needle. The recorder shall produce an autographic readable record on a visible chart of the weights of each of the materials batched. After batching, the needle on the chart shall return to zero. The chart scale along the ordinate shall be such that the major portion of the chart is used to record the total weights of the aggregates and water, and the cement. The date of batching, the container number and the batching certificate number shall be recorded on the recorder chart at the time of batching. The recorder charts, or copies thereof, shall become the property of the Contracting Agency and shall be submitted upon request.

All drybatched unmixed concrete delivered to the job site shall be stored in containers so constructed that the cement cannot comingle with the water and aggregate within the container. Any admixture added to powder form shall be added to the cement; added in liquid form, it shall be added to the water.

The contents of the container shall be discharged into a mixer at the job site. Following discharge of the first container into the mixer, the mixer shall be operated at mixing speeds during the discharge of the remaining containers. After the contents of the last container have been discharged into the mixer, the concrete shall be mixed as specified in this specification for transit mixers, and drum or turbine type mixers.

Any spillage of cement, aggregate, water or admixture during the filling, transporting, or the discharging of the container, shall be cause for rejection of the container or the contents of the mixer if any portion of the rejected container is discharged into the mixer.

725.9 LOADING AND TRANSPORTATION OF MATERIALS AND MIXED CONCRETE:

The compartments of trucks or other equipment used for the purpose of transporting proportioned aggregates, bulk cement or mixed concrete, shall be sufficiently high and tight, and otherwise suitably constructed and adequately protected, to prevent loss or leakage of the contents thereof during transit or charging.

725.10 TESTS:

Concrete specimens for compression tests will be taken in the field by a representative of the Engineer in accordance with ASTM C-172 and C-31 or AASHTO T-23, except at noted hereinafter.

Concrete samples shall be taken from the approximate middle 50 percent of the batch in an uninterrupted stream from the chute directly into the wheelbarrow or similar equipment. Where excessive slump is suspected, a controlling slump test may be made from any portion of the batch, except for the approximate 5 percent on each end of the discharge. If excessive slump is verified, at any time, the remainder of the load shall be rejected and removed from the project and a set of cylinders for compressive strength shall be taken from the batch, if any concrete from the batch was placed. The rate of discharge of the batch shall be regulated by the rate of revolutions of the drum and not by the size of the gate opening. Specimens for compression tests shall be stored in the field in accordance with methods approved by the Contracting Agency and protected from vibration and other disturbances, for a minimum of 28 hours and maximum of 76 hours. A maximum storage period would be involved only where weekends or holidays are involved. Cylinders stored in the field for the maximum period shall have the same validity as cylinders that have been stored overnight and brought in the following day.

Not less than 4 cylinder specimens will be made for each 50 cubic yards of each class of concrete with a minimum of 4 specimens for each class placed or not less than 4 specimens for each half-day's pour. Specimens will be tested in a laboratory designated by the Engineer in accordance with ASTM C-39 at the expense of the Contracting Agency.

Two cylinders shall be tested at 14 days. If their strength meets or exceeds the minimum 14-day requirements, the Contracting Agency will accept the concrete. The Engineer may test the other two cylinders at 28 days or discard at 60 days.

If this strength does not meet the 14-day requirement, the Contractor shall schedule and pay for two cores to be taken, on the 29th day, from the area of concrete represented by the cylinders. The Engineer shall be present when the coring is accomplished or additional cores will be required.

The Engineer will test the remaining two cylinders on the 28th day. If this test meets or exceeds the 28-day minimum compressive strength requirement, the Contracting Agency will accept the concrete and the Contractor may cancel the scheduled coring.

If the 28-day cylinder test does not meet the minimum 28-day compressive strength requirement, the cores will be tested in accordance with ASTM C-42 in a laboratory designated by the Contracting Agency. If the cores meet or exceed the minimum 28-day strength, the concrete will be accepted by the Contracting Agency.

If the strength of the 28-day cylinders and the strength of the cores as calculated in accordance with ASTM C-42 are deficient, the Contractor shall remove all of the concrete represented by the failing test specimens with the exception that if the Contractor believes that the deficient concrete was confined to a single batch, he may immediately cut a minimum of 4 additional cores, two on either side of the affected batch. The cores would be compared with the minimum specified compressive strength, for the purpose of defining the confines of the deficient concrete. All coring done to establish this premise would be at the expense of the Contractor. Evaluation of the cores shall be by the Engineer, or by a substitute agent designated by the Contracting Agency, and his decision shall be final.

725.11 ACCEPTANCE:

Concrete represented by a strength test of at least 95% of the required 28-day compressive strength will be acceptable. All concrete failing to meet this requirement as evidenced by tests of either standard cylinder or drilled core specimens shall be rejected, removed and replaced by the Contractor at the Contractor's expense.

When concrete is accepted on the basis of strength tests of less than 100% of the required minimum 28-day compressive strength, an adjustment in the contract unit price will be made for the quantity of concrete represented by such strength tests in accordance with the following schedule:

Adjustment in Contract Unit Price for Strength Deficiency

Percent of Specified Minimum 28-Day Compressive Strength Attained (Nearest 1%)	Percent of Concrete Unit Price Allowed
100% or greater	100
98-99	90
96-97	85
95	80

SECTION 726

CONCRETE CURING MATERIALS

726.1 GENERAL:

Curing materials shall consist of waterproof paper, polyethylene film or liquid membrane-forming compounds which, when applied to fresh concrete, will inhibit moisture loss and reduce temperature rise during the curing period. All curing materials and methods shall be approved by the Engineer prior to use. Wet coverings such as burlap, cotton mats, or other moisture-retaining fabrics also may be used, or may be required by special provisions.

726.2 MATERIALS:

(A) Waterproof paper, or polyethylene film, shall conform with AASHTO M-171.

(B) Liquid membrane-forming compounds shall conform with AASHTO M-148. Type 1 compound with either a Class A or Class B vehicle shall be used for concrete structures, except bridge decks. Type 2 compound, with either a Class A or Class B vehicle shall be used for portland cement concrete pavement, bridge decks and approach slabs.

(C) Burlap cloth made from jute or kenaf shall conform to AASHTO M-182.

End of Section

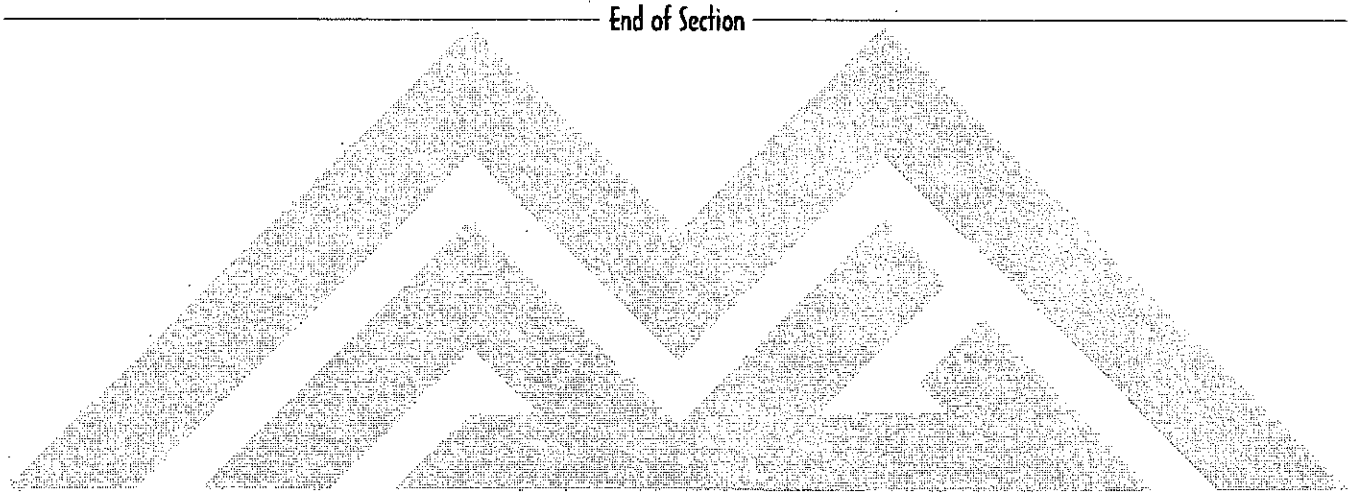

SECTION 727

STEEL REINFORCEMENT

727.1 GENERAL:

The following specifications set forth the requirements for bar reinforcement, wire reinforcement, and wire mesh reinforcement. The reinforcement shall conform accurately to the dimensions and details indicated on the plans or otherwise prescribed and before being placed in any concrete work, shall be thoroughly cleaned of all loose rust, mill scale, mortar, oil, dirt, or coating of any character, which would be likely to destroy, reduce, or impair its proper binding with the concrete.

No reinforcing steel will be accepted under this specification until it has been approved by the Engineer. When required by the Engineer, the Contractor or supplier shall furnish a spot sample taken on the project and notify the Engineer as to when and where they will be available. Such samples shall be furnished at the expense of the Contractor or supplier, but the cost of any testing that may be required will be borne by the Contracting Agency. Samples shall only be taken in the presence of the Engineer. The Contractor shall furnish 3 certified mill test reports or certificates of compliance for each heat or size of steel which can be clearly identified with the lot. When such information has been furnished, placing of the steel will not be held up until results of spot samples have been received. Unless otherwise specified, all reinforcing steel bars shall be deformed intermediate grade 40 billet steel conforming with ASTM A-615 and the shapes shall conform with ASTM B-670.

In testing bar reinforcement, only the theoretical cross-sectional area will be used in all computations.

Bending of steel shall conform to the requirements of ACI-318.

The various grades of steel shall not be used interchangeably in structures.

727.2 WIRE REINFORCEMENT:

Wire reinforcement shall in all respects fulfill requirements prescribed in ASTM A-82.

727.3 WIRE MESH REINFORCEMENT:

Mesh reinforcements shall conform to ASTM A-185. The gage of the wire and the dimension of the mesh will be specified in the special provisions or shown on the plans. The wire mesh reinforcement shall be so constructed as to retain its original shape and form during necessary handling. The effective cross-sectional area of the metal shall be equal to that specified or indicated on the plans.

727.4 WIRE TIES:

Wire for ties shall be black, annealed, not lighter than 16 gage.

End of Section

SECTION 728

CONTROLLED LOW STRENGTH MATERIAL

728.1 GENERAL:

Controlled Low Strength Material (CLSM) is a mixture of portland cement, aggregate and water that, as the cement hydrates, forms a soil replacement. CLSM is a self-compacting, flowable, cementitious material that is primarily used as a backfill or structural fill in lieu of compacted fill or unsuitable native material.

728.2 MATERIALS:

Portland Cement shall conform to Section 725.2.
Coarse and fine aggregates shall conform to Section 701.
Water shall conform to Section 725.5.

728.3 PROPORTIONING OF MIXTURES AND PRODUCTION TOLERANCES:

Proportioning of the mixture shall comply to Section 701.3.5, Section 725.7 and Table 728-1. A mix design shall be submitted with test data for the Engineer's approval prior to the excavation for which the material is intended for use.

TABLE 728-1

CONTROLLED LOW STRENGTH MATERIAL REQUIREMENTS

Description of CLSM	Cement Content, lbs/cu yd	Slump, inches	Compressive Strength at 28 days, psi
½ Sack CLSM	47 ±5%	7 ±1	70 ±30
1 Sack CLSM	94 ±5%	7 ±1	150 ±50
1 ½ Sack CLSM	141 ±5%	7 ±1	425 ±75

Notes for Table 728-1:

- The values specified in the table are for both mix design requirements and field production. The deviations are for production, testing and sampling tolerances.
- Slump shall be tested in accordance with ASTM C-143. Flow consistency test can be substituted for the slump test. When used, the CLSM shall have a flow consistency of 8 inches as tested in accordance with ASTM D-6103.
- Compressive strength shall be tested in accordance with ASTM D-4832. The supplier shall provide laboratory and/or field test data to verify the design strength.
- Sampling shall be in accordance with ASTM D-4832.
- Unit weight shall be obtained by ASTM D-6023.
- Temperature shall be taken in accordance with ASTM 1064.
- Cement content shall be tested in accordance with ASTM D-5982.

Where CLSM is to be used as backfill around gas pipelines (totally encapsulating the gas pipeline), the material shall meet a minimum permeability coefficient (k) of 1 x 10^{-5} cm/sec or more, based on ASTM 5048.

728.4 MIXING:

The total elapsed time between the addition of the water and placement of the complete mix shall not exceed 90 minutes. The Engineer may waive this limitation if the slump is such that the material can be placed without addition of water.

Mixing shall continue until the cementitious material and water are thoroughly dispersed throughout the material. Mixes shall be homogenous, readily placeable and uniformly workable. Proportioning of ingredients shall produce consistency, durability, workability and other required properties appropriate for the intended usage. When the CLSM is mixed other than at the project site, the mixing shall comply with Section 725.8. When the CLSM is mixed at the job site, the Contractor will submit for the Engineer's approval, the methods, equipment and procedures for proportioning and mixing of the material.

End of Section

SECTION 729

EXPANSION JOINT FILLER

729.1 PREMOLDED JOINT FILLER:

Expansion joint filler materials shall consist of premolded strips of a durable resilient compound and comply with ASTM D-1751, D-1752, or D-2628, as specified by the Contracting Agency.

729.2 POUR TYPE JOINT FILLERS:

Pour type joint fillers shall comply with ASTM D-1850, D-1190, D-1854, or with the following formulation, as specified by the Contracting Agency.

Asphalt latex joint filler shall consist of asphalt latex emulsion and sodium fluosilicate furnished in separate containers and mixed on the site. The emulsion shall consist by volume of 60 parts AR-1000 asphalt conforming to the requirements of Section 711, 40 parts of synthetic latex, GRS-Type 4, and 5 to 10 parts of sodium fluosilicate, half strength. The emulsion and sodium fluosilicate shall not be mixed until the joint is ready to be filled. The amount of sodium fluosilicate to be mixed with the emulsion shall be approximately 3 to 5 percent by weight of the emulsion. The joint to be filled shall be thoroughly cleaned and surface dry.

The sealing compound shall consist of paving asphalt, Grade AR-1000 conforming to the provisions of Section 711, emulsified with rubber latex in the presence of a suitable emulsifying agent. Rubber latex designated as GRS-Type 4, or any other approved type, containing approximately 40 percent solids.

The resulting emulsion shall consist of a minimum of 55 percent of paving asphalt and a minimum of 36 percent of rubber latex and shall conform to the requirements set forth in Table 729-1.

TABLE 729-1

ASPHALT-LATEX EMULSION JOINT SEALING COMPOUND

SPECIFICATION DESIGNATION	TEST METHOD	LIMITS	REMARKS
Furol Viscosity at 77°F.	AASHTO T-72	50-250 seconds	Before adding gelling agent.
Sieve Test	AASHTO T-59	1% Max.	Before adding gelling agent.
Penetration at 77°F.	ASTM D-217	50-250	The penetration test is made on a speciman prepared by stirring 5% of sodium fluosilicate into the asphalt latex emulsion in a 6 ounce deep ointment can. The specimen is then allowed to stand in the air at a temperature of 77°F. ± 2° for a period of 30 minutes and is then penetrated with a grease cone under a total load of 150 grams.
Elasticity		70% Min.	After addition of 5% of sodium fluosilicate and curing for 24 hours at 100°F. ± 2°, the specimen shall have an elastic recovery of not less than 70%.
Dehydration		Loss 30% maximum	Twenty-five grams of emulsion, prior to adding the gelling agent, is placed in an 8 ounce flat ointment can and dehydrated in a suitable oven maintained at a temperature of 200°F. ± 2° for a period of 24 hours.
Time of Set		15-60 minutes	After mixing the emulsion with 1% to 4% by weight of powdered sodium fluosilicate the emulsion shall harden or develop a set in from 16 to 60 minutes, under field conditions.

729.3 TEST REPORT AND SHIPMENT CERTIFICATE:

Each shipment shall be accompanied by a certificate in triplicate from the supplier that the material will comply with the above specifications and such certificate shall be delivered to the Engineer. The certificate shall show the shipment number for the entire lot of material contained in the shipment and shall also show a list which will enable the Engineer to identify each individual container by the supplier's batch number, with which each container shall be plainly marked.

729.4 APPLICATION:

At no time shall emulsion types be subjected to a temperature below 40°F. Prior to application, the material may be warmed, if necessary, to permit proper pouring of the joints. The method of heating shall be carefully controlled to avoid overheating of any part of the container or mixture and under no circumstances shall emulsions be heated to a temperature greater than 130°F.

Joints and cracks shall be thoroughly cleaned by hand or mechanical means immediately in advance of pouring the filler material. When new pavement has been cured by the Pigmented Sealing Compound Method, the joints and cracks shall be thoroughly scrubbed by means of a wire brush or a cloth mop saturated with gasoline or by other approved means.

All joints and cracks shall be surface dry before application of the joint sealer. No sealer shall be placed during unsuitable weather or when the atmospheric temperature is below 50°F., or when weather conditions indicate that the temperature may fall to 32°F. within 24 hours.

The joints and cracks shall be filled in a neat and workmanlike manner by means of a cornucopia pot or other approved method.

End of Section

SECTION 735

REINFORCED CONCRETE PIPE

735.1 GENERAL:

These specifications cover reinforced concrete pipe and related structures intended to be used for conveyance of sewage, industrial waste, storm and irrigation water.

The size, type, and D-load of the concrete pipe to be finished shall be as shown on the plans, or as specified under the item of work for the project of which the pipe is a part and shall be for pipe installed by the open-cut method of construction.

When specified in the special provisions, four sets of pipe line layout drawings shall be furnished to the Engineer prior to the manufacture of the concrete pipe. Catch basin connector pipe need not be included in the pipe line layout; however, pipe stubs shall be included. In lieu of including catch basin connector pipe in the pipe layout, a list of catch basin connector pipes shall accompany the layout. The connector pipe list shall contain the following information.

(A) Size and D-load of pipe.

(B) Station at which pipe joins main line.

(C) Number of section of pipe, length of section, type of sections (straight, horizontal bevel, vertical bevel, etc.).

The pipe layouts will be used by the Contracting Agency for reference only, but their use shall in no way relieve the Contractor of the responsibility for the correctness of the layout.

(D) All pipe installed in tunnels shall be ASTM C-76, Class III. Pipe stronger than that specified may be furnished at the Contractor's option, and at no additional cost to the Contracting Agency, provided such pipe conforms in all other respects to the applicable provisions of these specifications.

Whatever struts or other protective methods proved necessary to furnish and install the pipe to meet the limitation of cracks as specified herein, shall be provided and maintained throughout pipe handling and transportation.

735.2 QUALITY:

Reinforced concrete pipe shall be manufactured and tested in conformance with the requirements of ASTM C-76, except as modified herein.

All reinforced concrete pipe less than 36-inch inside diameter shall include an area of reinforcing steel in the bell not less than the area required for the circumferential reinforcement in the wall of the pipe.

735.3 CURVES, BENDS AND CLOSURES:

Horizontal and vertical long-radius curves shall be formed by bevel adapters or by beveling the straight pipe joint. The bevel of the pipe shall not exceed 5 degrees and the total angular deflection, for beveled pipe, shall not exceed 10 degrees. Small angular changes may be made with straight pipe provided that the joint opening does not exceed ¾ inch. Short radius curves and closures shall be formed with fabricated specials; however, the angular deflection of any segment of the fabricated section shall not exceed 10 degrees.

735.4 MATERIALS:

Except when otherwise permitted by the Engineer, no materials other than water, portland cement, Pozzolanic materials, mineral aggregates and steel shall be used in the manufacturing of the pipe, conforming to ASTM C-76, with the following exceptions:

(A) Portland Cement: Portland cement shall comply with ASTM C-150, Type II, low alkali. The pipe manufacturer shall supply a cement mill certificate in triplicate for each load of cement delivered, showing the specification, type, chemical analysis, and quantity. In lieu of the above, on stockpiled pipe the manufacturer shall certify that the type of cement used meets this specification. The pipe manufacturer shall also certify in writing that the cement content of the concrete complies with the specifications as to yield per cubic yard of concrete poured.

(B) Pozzolanic Materials: Pozzolanic materials shall conform to Subsection 725.2.1 and ASTM C-618. If an approved Pozzolanic material is used, 17.5 percent of the combined weight of Pozzolanic materials and portland cement shall be Pozzolanic material.

(C) Mixture: The proportion of portland cement or combination of portland cement and Pozzolanic material in the mixture shall not be less and 564 lbs. per cubic yard of concrete.

(D) Concrete Admixtures: The pipe manufacturer shall certify in writing that no calcium chloride or admixture containing calcium chloride has been used in the manufacture of the pipe. Other admixtures may be used if approved by the Engineer. The pipe manufacturer shall certify to the brand and chemical content of such admixtures used.

(E) Steel Reinforcement: The pipe manufacturer shall supply 3 copies of mill certificates showing heat numbers, chemical analysis, and physical tests on reinforcing steel. In lieu of the above, on stockpiled pipe the manufacturer shall certify that the type of steel used meets this specification. The number of steel wraps shall not be less than 5 percent below that shown on the shop drawing for any one pipe.

(F) Rubber Gaskets shall comply with Section 765.

735.5 MANUFACTURER'S QUALIFICATIONS AND EQUIPMENT REQUIREMENTS:

The manufacturer shall be competent to manufacture the type, size and quality of pipe; in addition, he shall have satisfactory curing and storage facilities, and satisfactory financial resources.

Calibration of Cement and Aggregate Scales: The pipe manufacturer shall make whatever alterations are necessary to his equipment to enable the Contracting Agency's Sealer or State Inspector of Weights and Measures to check, calibrate, and seal the aggregate and cement scales used in the pipe production.

735.6 CURING OF PIPE:

(A) Steam Curing: The manufacturer shall provide adequate steam plant, piping, enclosures, and other facilities for curing the pipe. The enclosures shall be such that the temperature is maintained continuously between 110 and 150°F.

(B) Curing of the pipe shall not commence until the concrete has attained its initial set, but in any event not sooner than 1 hour nor later than 8 hours after placing of the concrete. Rate of rise of temperature shall not exceed 30° per hour.

(C) Water Curing: The pipe shall be kept moist during daylight hours. The pipe, including the ends, shall be covered with burlap for the first 3 days, except that, if the pipe is kept constantly and completely wet with fog sprays during the daylight hours, the burlap covering may be omitted. If the manufacturer fails to proceed immediately with the required water curing he shall seal the surfaces of the concrete, except joint surfaces that are to be grouted, with an approved, white pigmented sealing compound in accordance with Section 726.

735.7 TESTS AND ACCEPTANCE:

(A) Basis of Acceptance: The basis of acceptance for the reinforced concrete pipe shall be in accordance with ASTM C-76 by the method stated in the special provision and as amended herein. However, the purchaser may, at his option, make concrete cylinder tests for the purpose of determining release dates for shipment of the pipe and for his information in regard to general quality of the concrete.

(B) Segregation of Material: The slump of the concrete mix shall not exceed 4 inches so as to preclude excessive segregation of the materials used and shall be proportioned so that the result shall be a homogeneous concrete mixture of such quality that the pipe will conform to the tests and design requirements of these specifications.

(C) A pipe has failed the D-load test when the opening crack exceeds .01 inch for a distance of 1 foot when measured at close intervals. These measurements are taken within the 1 foot measured span only when the crack line is more or less parallel to the axis of the pipe, as it is obvious that where the crack deviates substantially from parallel, and approaches a direction normal to the axis, that the edges of the crack tend to slip past each other, instead of opening up under load. The intent of the test is to measure the crack opening under stress.

(D) Porous or honeycomb concrete areas 6 inches or less in diameter may be removed and repaired. Pipe having defects or repairs greater than 6 inches in diameter will not be accepted.

(E) Any crack exceeding 1 foot in length that goes completely through the pipe, is not considered acceptable whether repaired or not, except that a single end crack that does not exceed the depth of the joint as measured from the end to the inside shoulder is acceptable.

(F) Any crack that is .01 inch in width for one-sixteenth inch in depth or deeper, for a length of 1 foot or more and continues as a hairline crack down to the reinforcing steel for over ½ the length of the pipe is not considered acceptable whether repaired or not.

(G) A single continuous hairline crack which does not extent to the reinforcing steel and not in excess of .01 inch in width for a distance of 1 foot is acceptable without repair. This type of crack, longer than 1 foot shall be repaired.

(H) Repairs shall be made by filling the defect with epoxy under pressure or by chipping out a V-section to the full depth of the defect and repairing with an approved patching compound. The composition of the patching compound shall be furnished to the Engineer for approval.

(I) The words regarding acceptability and repairability in the above paragraphs shall also apply when the crack occurs after loading of the pipe in the trench with backfill. Cracks wider than .01 inch shall be assumed to indicate overstress of the steel. In such case, the defective portion of the installation shall be replaced or repaired in a manner acceptable to the Engineer. After structural repairs are completed, the remaining cracks shall be filled as required above. All corrective measures shall be at the expense of the Contractor.

(J) Blisters: All pipe joints having blisters involving less than ¼ the interior surface area shall be repaired by removing all loose material and exposing all hollow area and replacing with fresh concrete properly bonded, with an acceptable bonding agent, and curing the repair with membrane coating. Blisters with larger areas are not considered to be repairable or acceptable.

(K) Painting of pipe, or portion of pipe, with grout to cover defects, minor or major, will not be permitted until approved by the Engineer.

(L) Where the modified or special design method, under ASTM C-76 is elected, acceptance on the basis of material tests and inspection of manufactured pipe for defects and imperfections shall be as stated in ASTM C-76, and as amended herein. However, one joint of each size and D-load shall be selected by the Engineer for test purposes, and shall be tested for strength by the 3 edge bearing method, ASTM C-497, with the results being used for confirmation of the submitted design for this D-load. If the pipe section tested fails in compression or shear before reaching the D-load specified, the test shall be considered a failure. Additional sections of the same diameter size and class shall be tested as specified above until the load requirements are met for the D-load strength. This test procedure shall be accomplished only once per manufacture regardless of the number of contractors he supplies. Placing of reinforcing steel in the test section of pipe to control shear cracks will not be permitted.

Requirements regarding defects shall be the same as stated above for standard pipe.

Concrete test requirements specified under compression tests of ASTM C-76 shall be amended in part to read as follows: "The average of any 5 consecutive strength tests of the laboratory-cured specimens shall be equal to or greater than the specified strength set forth in Tables III, IV, or V, and not more than 20 percent of the strength tests shall have values less than the specified strength. If more than 20 percent have values less than the specified strength, the lot represented shall be considered to be defective and not acceptable. In no case shall any cylinder tested fall below 80 percent of the specified design strength. If any one cylinder falls below 80 percent of the specified design strength, then the entire production represented by that cylinder will not be accepted for purchase by the Contracting Agency unless the Contractor can demonstrate by coring to the satisfaction of the Engineer, that the cylinder in question is not representative of the entire production, or is representative of only a portion of the entire production."

During the fabrication of the pipe, concrete cylinders shall be made from a representative sample of the concrete. Concrete cylinders and slump tests shall be made by the Engineer or under his direct supervision. A set of cylinders shall consist of three. A minimum of one set shall be made for each day's production.

In vibrated and spun pipe, where the slump of the concrete approaches 0, the cylinders shall be made as follows:

Fill the cylinder can in 3 equal layers. Each layer shall be vibrated and assisted by rodding or other mechanical contrivance simultaneously until the moisture comes to the surface. Care shall be taken that the material is not over-vibrated which will cause segregation. When the moisture rises to the surface of the third layer, it is struck off and leveled. The cap is put on the cylinder and it is marked for identification. It shall then be steam cured in the same manner as the pipe, at the conclusion of which, the cylinders shall be brought into the laboratory for standard moist curing until the prescribed time for the compressive test.

The cylinders shall be made according to ASTM C-31 where the pipe is manufactured with concrete that has enough slump for the material to be hand rodded. For reinforced concrete pipe made by the centrifugal method, the manufacturer may substitute centrifugally cast test cylinders for standard test cylinders. Centrifugally cast cylinders shall be made in accordance with AWWA C302 and cured in the same manner as normal test cylinders, except that the net area of the hollow cylinder will be used to determine the compressive strength.

735.8 DOWNGRADING OF PIPE:

For the purpose of these specifications, downgrade pipe shall be defined as pipe which is to be used under loads less than that for which they have been designed.

735.9 SANITARY SEWER PIPE:

In addition to the above, sewer pipe shall meet the requirements of ASTM C-76, reinforced concrete pipe having O-ring Rubber Gasket Joints with an interior lining of plastic liner plate in accordance with Section 741.

(A) Pipe Design: The wall thickness and the amount of circumferential reinforcement shall not be less than that required for the D-load indicated on the plans and required by the specifications. The calculations for wall thickness and amount of steel area per foot of pipe, having concrete lining, shall be for a pipe 2 inches larger in internal diameter than that specified on the plans. The additional concrete lining shall not be considered in the calculation for the area of steel required, nor in any of the load calculations.

D-load class of pipe and the date poured shall be plainly marked inside each pipe section. Specific approval must be obtained, prior to submitting a bid, to decrease the cover over the reinforcing steel at the joint should the steel interfere with the rubber gasket in the groove at the spigot end.

(B) Pipe Construction: Tamped or packer head pipe will not be allowed. Pipe having concrete lining shall have the internal diameters indicated on the plans, measured to the inside of the additional 1 inch of covering. The various sizes of pipe shall be centrifugally spun. Pipe having plastic liner plate shall be vibrocast to ½ inch tolerance to match the unlined pipe of the D-load indicated on the plans.

(C) Test and Acceptance: In addition to the statements above, any crack that goes completely through the pipe, regardless of length of crack is not considered acceptable whether repaired or not, except that a single end crack that does not exceed the depth of the joint as measured from the end to the inside shoulder is acceptable.

735.10 ACCEPTANCE MARK:

The Engineer may, at the place of manufacturer, indicate his acceptance of the pipe for delivery to the job by marking the pipe with the Contracting Agency's mark. Such acceptance, however, shall not be considered a final acceptance.

If the pipe is subsequently rejected, the mark placed thereon by the Engineer shall be defaced.

End of Section

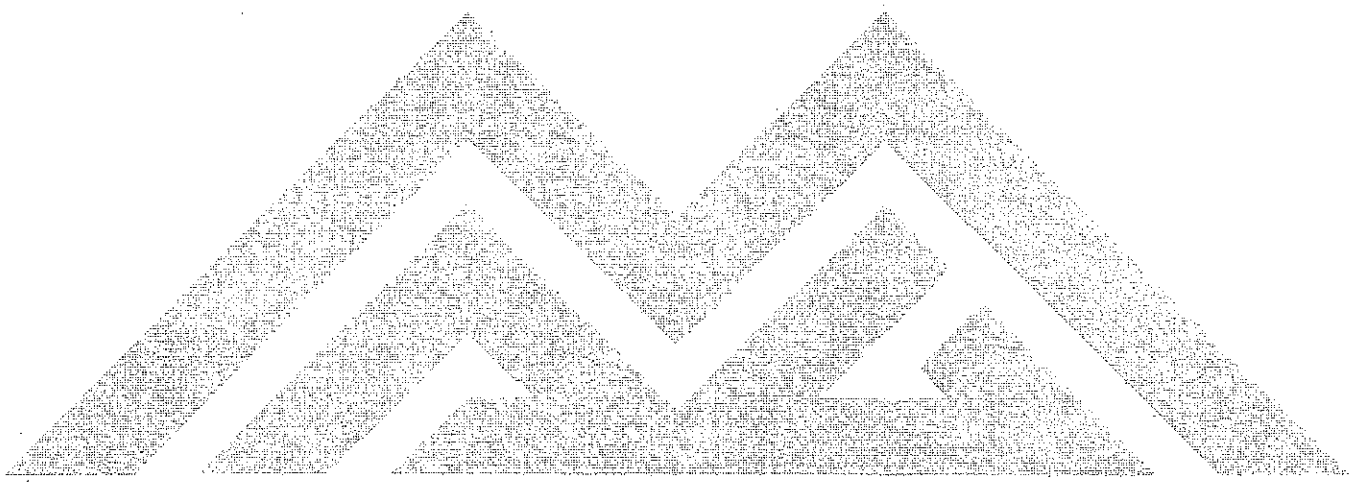

SECTION 736

NON-REINFORCED CONCRETE PIPE

736.1 GENERAL:

The size and classes of the non-reinforced concrete pipe to be furnished shall be as shown on the plans, or as specified under the item of work for the project of which the concrete pipe is a part.

Strength classes of non-reinforced concrete shall be as identified in ASTM C-14, Class 1 non-reinforced concrete pipe. Class 2 non-reinforced concrete pipe, or Class 3 non-reinforced concrete pipe.

Unless otherwise specified, Class 3 non-reinforced concrete pipe will be used.

736.2 MATERIALS:

Materials used in manufacturing the pipe shall be as specified in ASTM C-14, with the following exception:

Cement shall conform to ASTM C-150, Type II, low alkali. Samples and testing shall conform to the methods designated therein. The pipe manufacturer shall supply a cement mill certificate, in triplicate, for each load of cement delivered, showing the specification, type, chemical analysis, and quantity. On stockpiled pipe in lieu of the above, the manufacturer shall certify that the type of cement used meets this specification. Satisfactory facilities shall be provided for identifying, inspecting, and sampling cement at the mill, the warehouse, and the site of the work. The Contracting Agency shall have the right to inspect the cement and obtain samples for testing at any of these points. The cement shall be stored in a weathertight, dry, well ventilated structure approved by the Engineer. Cement salvaged by cleaning cement sacks, mechanically or otherwise, shall not be used in the work. Cement containing lumps will be rejected and shall immediately be removed from the site of the work. If the temperature of the cement exceeds 150°F., it shall be stored until cooled to that temperature.

736.3 PIPE JOINTS:

The joints may be tongue and groove mortared joints, or similar to R-4 or modified R-4 Bureau of Reclamation Through-Bell type joints using O-ring rubber gaskets. With rubber gasket joints, inside mortaring and outside grouting is not required. Tongue and groove joints shall be mortared inside and grouted outside. Grouting of outside joints shall be by the diapering method.

736.3.1 Cement Mortar Joints:

(A) The mortar or grout shall consist of 1 part portland cement and 2 parts sand, by volume. The quantity of water in the mixture shall be sufficient to produce a soft workable mortar, but shall in no case exceed a water-cement weight ratio of 0.53. Where outside joints are made by the diaper method, the grout shall be composed of 1 part cement to 3 parts sand, and shall be mixed to the consistency of thick cream. The sand shall conform to Section 701, and the cement shall conform to Section 725.

(B) The pipe ends shall be thoroughly cleaned and wetted with water before the mortar or grout is placed. No backfilling around the joints shall be done until the joints have been fully inspected and approved.

(C) Mortar joints shall be cured by keeping them wet for 3 days or by using a curing compound.

736.3.2 Rubber Gasket Joints: Rubber gaskets shall comply with Section 765.

736.4 CURVES, BENDS AND CLOSURES:

Horizontal and vertical long-radius curves shall be formed by slight deflection at the joints, provided that the maximum joint opening caused by such deflection shall not exceed ¾ inch. Short radius curves shall be formed by straight pipe in which the joints are beveled. The bevel of the pipe shall not exceed 5 degrees, and the total angular deflection for beveled pipe shall not exceed 10 degrees at any joint.

736.5 CARE OF PIPE AND MATERIALS:

All pipe and materials shall be manufactured, handled, loaded, shipped and unloaded in such manner as to be undamaged and in sound condition, in the completed work. Particular effort shall he exercised to protect the ends of pipe. Repairs on damaged pipe shall be made to the satisfaction of the Engineer, otherwise they shall not be used in the work and shall be replaced with an equal pipe or special in an acceptable condition. At all times rubber gaskets shall be stored in a cool, dark place until ready for use.

736.6 TESTS:

Before pipe is delivered to the job site for use in any work under the contract, test pipes shall meet the requirements of the hydrostatic pressure test and the loading test described in ASTM C-14. The test shall be made at the point of manufacturer and shall be made under the presence of the Engineer.

End of Section

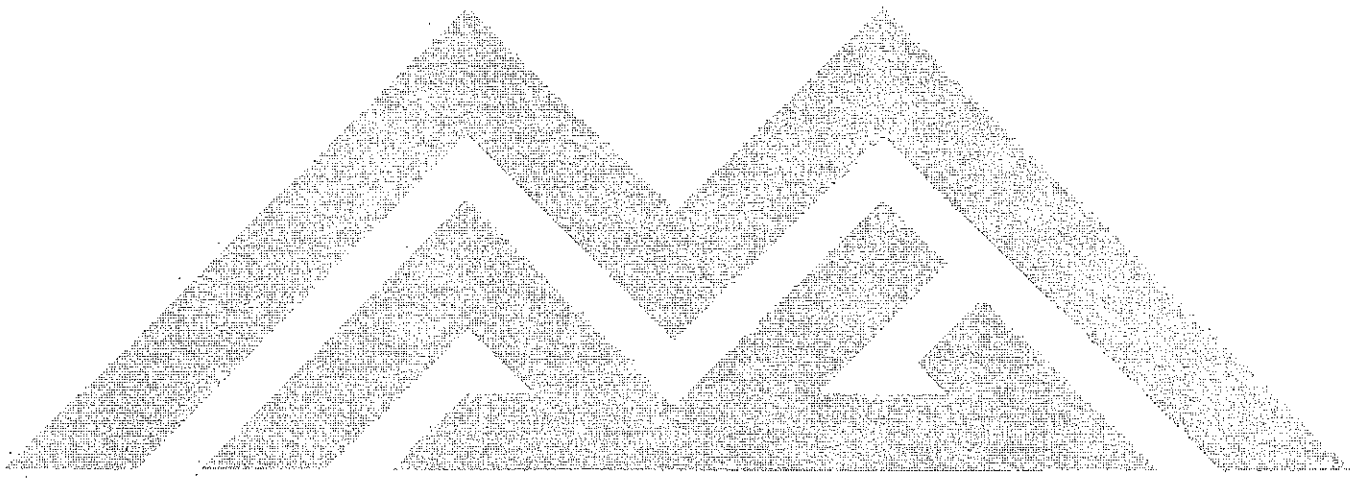

SECTION 737

ASBESTOS-CEMENT PIPE AND FITTINGS FOR STORM DRAIN AND SANITARY SEWER

737.1 GENERAL:

This specification covers storm drain and sanitary sewer pipe for conveying storm water and sewage in nonpressure pipe for gravity flow systems. Pipe, couplings and fittings shall conform to:

(A) Storm Drain: ASTM C-663, Type I.

(B) Sanitary Sewer: ASTM C-428, Type II and lined as specified below.

737.2 CLASSES:

All asbestos-cement storm drain and sanitary sewer pipe shall be designated as either Class 1500, 2400, 3300, 4000, or 5000 based upon the respective crushing strength for which it is designated and tested. Pipe and fittings shall be furnished in the size and class designated on the plans.

737.3 LENGTH OF PIPE:

At least 90 percent of the total footage of any one size and class, excluding short lengths, shall be in standard lengths. The remaining footage may be in random lengths of not less than 7 feet, however, short lengths for making connections to manholes or other structures are permitted as indicated in Table 737-1.

Pipe directly connected to or supported by rigid structures shall not have a length beyond the rigid support provided by the structure in excess of that shown in Table 737-1. Such structures include manholes and foundation walls and cradles. This length limitation need not apply (full length may be used) if a flexible joint is provided at the point of juncture and the pipe from that point does not rest on the structure.

TABLE 737-1

ASBESTOS-CEMENT PIPE LENGTHS

Pipe Size	Allowable Length of Pipe
6″	3′-3″
8″-24″	6′-6″
30″-36″	13′-0″

737.4 COUPLINGS:

Couplings shall conform to the same physical requirements as for the class of pipe with which they are to be used. Storm drain couplings may be plastic collars sized to fit the machined end of the pipe and composed of a plastic conforming to ASTM D-1248, Type II, Grade 3.

737.5 FITTINGS:

Asbestos-cement storm drain and sewer pipe wyes, tee, elbows or other fittings shall conform to the same physical requirements as for the class of pipe with which they are to be used.

737.6 RUBBER RINGS:

Each asbestos-cement coupling shall have 2 joint sealing rings conforming to the requirements of ASTM D-1869. This material specification shall also apply to the rings furnished for use with fittings.

(A) Storm drain pipe shall have synthetic or natural rubber rings, where resistance to oil or solvents is not required.

(B) Sanitary sewer pipe shall have synthetic rubber rings, where resistance to oil or solvents is required.

737.7 INSPECTION AND TESTING:

The uncombined calcium hydroxide in the asbestos-cement pipe, fittings and couplings shall not exceed:

(A) Three percent for storm drains

(B) One percent for sanitary sewers

When tested in accordance with ASTM C-500. Certified copies of all tests shall be submitted to the Engineer for each lot of pipe furnished.

In addition the Contracting Agency may require all inspection and testing to be performed in the United States of American at the manufacturer's plant or at a testing laboratory approved by the Contracting Agency.

737.8 SANITARY SEWER PIPE LINING:

Asbestos-cement pipe and fittings used for sanitary sewers shall be lined with an epoxy resin base of 100 percent solids content (solvent free) with a minimum lining thickness of 32 mils. The lining and its application shall conform in all other respects to ASTM C-541 and NSF Criteria C-7.

End of Section

SECTION 738

HIGH DENSITY POLYETHYLENE PIPE & FITTINGS FOR STORM DRAIN & SANITARY SEWER

738.1 GENERAL:

This specification covers the requirements of profile-reinforced, high density polyethylene (HDPE) pipe manufactured per ASTM F-894 for gravity flow, low pressure storm drain and sanitary sewer systems. When noted on the plans or in the special provisions, gravity flow, low pressure storm drains and sanitary sewers may be constructed using HDPE pipe. The HDPE pipe will be of the sizes 18-inch diameter through 120-inch diameter.

For the purpose of this specification low pressure is defined as twenty-five (25) feet of water column or less.

The size and class of the HDPE pipe to be furnished shall be designed by the Engineer and shown on the plans or in the project specifications. At no time will the class designed be less than RSC-63.

738.2 MATERIALS:

738.2.1 Base Material Composition: Pipe base material and fittings shall, in accordance with ASTM F-894, be made from a PE plastic compound meeting the requirements of Type III, Class C, Category 5, Grade P34 as defined in ASTM D-1248 and with established hydrostatic design basis (HDB) of not less than 1250 psi for water at 73.4 degrees F. as determined in accordance with Method ASTM D-2837. Materials meeting the requirements of cell classification PE 334433 C or higher cell classification, in accordance with ASTM D-3350 are also suitable.

738.2.2 Other Pipe Materials: Materials other than those specified under Base Materials shall comply with ASTM F-894.

738.2.3 Gaskets: Rubber gaskets shall be manufactured from a natural rubber, synthetic elastomer or a blend of both and shall comply in all respects with the physical requirements in ASTM F-477.

738.2.4 Thermal Welding Material: The material used for thermally welding the pipe material shall meet the requirements established for the base material.

738.2.5 Lubricant: The lubricant used for assembly shall comply to manufacturer's recommendations and have no detrimental effect on the gasket or pipe.

738.3 JOINING SYSTEMS:

738.3.1 Gasket Type: Joints for the piping system and fittings shall consist of an integrally formed bell and spigot gasketed joint. The joint shall be designed so that when assembled, the elastomeric gasket located on the spigot is compressed radially on the pipe or fitting bell to form a water tight seal. The joint shall be designed so to prevent displacement of the gasket from the joint during assembly and when in service.

All pipe shall have a home mark on the spigot end to indicate proper penetration when the joint is made.

The bell and spigot configurations for the fittings shall be compatible to those used for the pipe.

Joints shall provide a seal against exfiltration and infiltration. All surfaces of the joint upon which the gasket may bear, shall be smooth and free of any imperfections, which would adversely affect sealability.

The assembly of the gasketed joints shall be in accordance with the pipe manufacturer's recommendations.

738.3.2 Thermal Weld Type: The pipe ends shall consist of an integrally formed bell and spigot, with or without the elastomeric centering gasket, which join together to form an interface between bell and spigot, such that it is suitable to seal by thermal weld using the extrusion welding process, in accordance with the manufacturer's recommended procedure.

Thermal welded joints may be effected by welding from inside the pipe or outside, or both.

The assembly of the welded joints shall be in accordance with the manufacturer's recommendations.

Thermal welded joints shall be used only when specified on plans or in specifications.

738.4 FITTINGS:

Fittings for HDPE profile wall pipe may include tees, elbows, manhole adapter rings, plugs, caps, adapters and increasers. Fittings shall be joined by gasket type or thermal weld type joints in accordance with Subsection 738.3

A clamp gasket or approved method shall be provided at manhole entry or connection to reduce infiltration and exfiltration. Where precast manholes are used, entrance holes must be large enough to allow for proper grouting around the manhole gasket. A non-shrink grout shall be used for grouting.

738.5 CERTIFICATION:

The manufacturer shall furnish an affidavit (certification) that all materials delivered shall comply with the requirements of ASTM F-894.

738.6 DIMENSIONS AND TOLERANCES:

Pipe dimensions shall comply with dimensions given in Table 1 of ASTM F-894. The "average inside diameter" of the pipe shall not deviate from its normal pipe size by more than as specified in Table 1 of ASTM F-894.

Pipe shall have a Ring Stiffness Constant (RSC) as shown on the plans. The minimum RSC shall be RSC-63.

738.7 CLASSIFICATIONS:

HDPE profile-reinforced pipe products shall be made in four standard Ring Stiffness Constant (RSC) classifications, 40, 63, 100 and 160. These are referred to as RSC-40, RSC-63, RSC-100 and RSC-160. The RSC test shall be conducted in accordance with ASTM D-2412 with the exceptions listed in accordance with ASTM F-894.

738.8 MARKINGS:

Markings on pipe shall be per ASTM F-894.

738.9 CARE OF PIPE AND MATERIALS:

Care of pipe materials shall comply with Subsection 736.5.

Pipe in shipping or storage shall not be stacked higher than three rows for pipes 21-inches in diameter or less, nor higher than two rows for pipes 24 to 36-inches in diameter inclusive. Pipe shall not be stacked, shipped, or stored with weight on the bells of the pipe.

Pipe that is gouged, marred, or scratched forming a clear depression shall not be installed and shall be removed if damaged in the installation.

End of Section

SECTION 741

LINING FOR REINFORCED CONCRETE SANITARY SEWER PIPE

741.1 GENERAL:

The interior area of the reinforced concrete pipe as indicated on the plans, shall be sealed and protected with lining, as specified below.

The installation and application of the pipe lining shall be accomplished by the supplier of the reinforced concrete pipe.

All work for and in connection with the installation of lining in concrete pipe and the field sealing of joints shall be done in strict conformance with all applicable published specifications, instructions and recommendations of the approved lining manufacturer. The pipe supplier shall furnish all labor, material and equipment to successfully accomplish the lining.

741.2 MATERIALS:

741.2.1 Material Composition: The material shall be a liner plate which is a combination of inert, synthetic resins, pigments, and plasticizers, compounded to make permanently flexible sheets.

The liner plate shall be resistant to the following: Oxidizing agents, sulfuric, phosphoric, nitric, chromic, oleic, and stearic acids; sodium and calcium hydroxides; ammonia, sodium, calcium, magnesium, and ferric chlorides; ferric sulfate, petroleum oils and greases; vegetable and animal oils, fats, greases and soaps.

Liner plate shall be impermeable to sewage gasses and liquids and shall be nonconductive to bacterial or fungus growth. All liner plates shall be factory checked electrically to insure freedom from any porosity with a high voltage holiday detector set at a minimum of 20,000 volts.

Joint strips and welding strips shall have the same composition and corrosion resistance as liner plate, but shall not have locking extensions.

The lining shall have good impact resistance, shall be flexible and shall have an elongation sufficient to bridge up to 1/4 inch setting crack which may take place in the pipe or in the joint after installation, without damage to the lining.

Once cast into the pipe, the lining shall be permanently and physically attached to the concrete by a locking extension and shall not rely on an adhesive bond.

741.2.2 Material Details and Dimensions: The liner plate shall not be less than 0.065 inches in thickness. Locking extension shall be of the same material as the liner and shall be integrally extruded with the sheets. If steel bands are used to secure the liner plate to the forms transversely, strap channels shall be integrally molded into the sheet.

Liner plate shall be supplied as pipe size sheets fabricated by shop welding together the basic size sheets.

Joint straps shall be 4 inches ± 0.25 inches in width and shall have each edge beveled prior to application.

Welding strips shall be 1 inch ± 0.125 inch in width and shall have the edges beveled at time of manufacture.

2The Contractor shall submit a shop drawing showing liner plate details for approval by the Engineer, prior to fabrication of the pipe.

741.3 Installation of Liner Plate: The installation of liner plate, including the welding of all joints, shall be done in accordance with the manufacturer's recommendations. Nailing through the plate will not be tolerated. Liner plate shall be installed with locking extensions parallel with the longitudinal axis of the sewer, unless otherwise shown on the plans. All joints between individual sheets or sections of liner plates shall be continuously heat-welded by the use of welding strips of the same kind and equivalent thickness of material as the liner plates (with the exception of the integral extension ribs).

Liner plate shall be held snugly in place against inner forms by means of light gage steel wire, light steel banding straps or other suitable means. If steel banding straps are used, they shall be applied in strap channels provided for this purpose.

Locking extensions (T-shaped) shall be integrally extruded to all lower, terminal or longitudinal edges of liner plate as applied to concrete pipe. If banding straps are used, a steel rod ¼-inch in diameter may be inserted in each locking extension along the longitudinal edges of each sheet of liner plate for concrete pipe or some other approved method for holding the lower edge of the liner plate snugly against the form shall be provided.

Concrete poured against liner plate shall be compacted in a careful manner so as to protect the liner plate and to produce a dense, homogeneous concrete securely anchoring the lock extensions into the concrete.

In removing forms, care shall be taken to protect liner plate from damage. Sharp instruments shall not be used to pry forms from lined surfaces. All holes and cut, torn or seriously abraded areas in the liner plate shall be patched. Patches made entirely with welding strip shall be fused to the liner plate over the entire patch. Larger patches may consist of smooth liner plate applied over the damaged area with adhesive. All edges must be covered with welding strip fused to the patch and the sound liner plate adjoining the damaged area.

The Contractor shall take all necessary measures to prevent damage to installed liner plate from equipment and materials used in or taken through the work.

The applied lining shall be free from bubbles due to poor workmanship, and the Contractor shall cut out said bubbles and weld a similar sheet in place of the bubble, unless otherwise directed by the Engineer.

Application on Concrete Pipe-Special Requirements: Liner plate shall be set flush with the inner edge of the bell or groove end of a pipe section and shall extend to the spigot or tongue end or to approximately 3-inches beyond the tongue end, depending upon the type of liner plate to be made with the adjoining concrete pipe.

Wherever concrete pipe, which are protected with liner plate, join structures not so lined, such as brick structures, concrete pipe, cast-in-place structures or clay pipe, the liner plate shall be extended over and around the end of the pipe and back into the structure for not less than 4-inches.

Where a pipe spur, not of plastic lined concrete, is installed through lined concrete pipe, the liner plate shall be returned 4-inches at the surface of contact. The seal between the liner plate and the spur shall be made using an approved adhesive material and strapped in place.

If the joint space is too wide or the joint space surface too rough to allow satisfactory sealing with this adhesive, the joint space shall be filled with 2 inches of densely caulked lead wool or other approved caulking material.

Lined concrete pipe may be cured by standard curing methods. Care shall be exercised, in handling, transporting and placing lined pipe to prevent damage to the liner plate. No interior hooks or slings shall be used in lifting pipe. All handling operations shall be done with an exterior sling or with a suitable fork lift.

No pipe with damaged lining will be accepted until and unless the damage has been repaired to the satisfaction of the Engineer.

741.4 Field Joints: The Contractor shall obtain the services of qualified personnel to weld the liner plate field joints. Pipe joints must be dry before the liner plate joints are made. All mortar and other foreign material shall be removed from liner plate surfaces adjacent to the pipe joint, leaving them clean and dry.

No liner plate joints shall be made until the trench has been backfilled.

Field joints in the liner plate at pipe joints may be either of the following described types:

Type P-1 — The joint shall be made with a separate 4-inch joint strip and 2 welding strips. The 4-inch strip shall be centered over the joint, secured to the liner plate with an approved adhesive, or other approved means, and welded along each edge to adjacent liner plate with a 1-inch weld strip. The width of the space between adjacent liner plate sheets shall not exceed 2-inches. The 4-inch joint strip shall lap over each liner plate a maximum of 1 inch.

Type P-2 — The joint shall be made with a plastic strip, without locking extensions integrally extruded with the liner plate and extending approximately 3-inches beyond the spigot end. A 1-inch welding strip is required. The joint strip shall overlay the liner plate a minimum of 1-inch on the downstream side of the pipe joint. An approved adhesive, or other approved means, shall be used to hold the lap in place during the welding. The joint strip on beveled pipe shall be trimmed to a width, measured from the end of the spigot, of approximately 3-inches for the entire circumferential length of the liner. Distortion in bending back the strip to expose the pipe joint during the laying and joint mortaring shall be avoided. All welding of joints is to be in strict conformance with liner plate manufacturer's specifications.

Type P-4 — The joint shall be made with a 4-inch weld strip. The 4-inch weld strip shall be centered over the joint and welded in place to the lining in adjacent joints of pipe. The weld strip shall lap over each liner plate in minimum of 1 inch.

741.5 Testing and Repairing Damaged Liner Surfaces: After the pipe is installed in the trench, all surfaces covered with liner plate shall be tested with an approved electrical holiday or flaw detector set at a minimum of 20,000 volts. All welds shall be physically tested by a non-destructive probing method. All patches over nail and form tie holes, or repairs to the liner plate wherever damage has occurred, shall be done in conformance with the instructions and recommendations of the liner plate manufacturer.

Each transverse welding strip which extends to a lower edge of the liner plate shall be tested. The welding strips shall extend below the liner plate, providing a tab. A 10-pound pull will be applied normal to the face of the pipe by means of a spring balance. Liner plate adjoining the welding strip will be held against the concrete during application of the force. The 10-pound pull will be maintained if a weld failure develops, until no further separation occurs. Defective welds will be re-tested after repairs have been made. Tabs shall be trimmed away neatly after the weld strip has passed inspection. The Contractor shall provide all equipment required to test liner plate in the manner recommended by the manufacturer and as described above. The Contractor shall also provide personnel qualified to perform the testing. Testing shall be performed in the presence of a representative of the Contracting Agency.

End of Section

SECTION 743

VITRIFIED CLAY PIPE

743.1 GENERAL:

Vitrified clay pipe, 30 inch diameter or less, shall be extra strength in accordance with the requirements set forth in ASTM C-700, except as modified herein. Pipe larger than 30 inches shall be of the type specified in the Special Provisions.

743.2 MANUFACTURING REQUIREMENTS:

743.2.1 Shape: Pipe ends shall be square with the longitudinal axis, and sockets shall be true, circular, and concentric with the barrel of the pipe.

The ends of the pipe shall be so formed that when the pipes are laid together and the joints made, they shall constitute a continuous and uniform line of pipe and shall have a smooth and regular interior surface.

743.2.2 Stoppers, Branches, Ends: Stoppers shall be used with all branch pipes that are to be left unconnected. Stoppers for branch pipes having flexible compression joints may be either clay discs with flexible compression joints, factory applied, that will mate with the branch joint; or, a resilient material of controlled design and dimensions for mating with the branch pipe to which it is to be applied; or, of other material approved by the Engineer. Wooden stoppers will not be accepted.

Branches shall be furnished with connections of the sizes specified, securely and completely fastened to the barrel of the pipe in the process of manufacture.

"T" branches shall have their axis perpendicular to the longitudinal axis of the pipe. "Y" branches shall have their axis 45 degrees (unless otherwise specified) from the longitudinal axis of the pipe, measured from the socket end.

All branches shall terminate in sockets. Barrel of the branch shall be of sufficient length to permit making proper joint when the connecting pipe is inserted in the branch socket.

743.2.3 Imperfections The following additional imperfections in a pipe or fittings will be considered injurious and cause for rejection:

(A) Any surface fire crack in the ends of the spigot or bell which exceeds 1 inch in length.

(B) Any piece broken from the bell end of the pipe or fittings when it adversely affects the performance of the joint or connection.

743.2.4 Certification: A certificate from the manufacturer shall be furnished attesting that the pipe meets the requirements of this specification, including test reports for the hydrostatic pressure test and the loading test herein specified.

743.3 TESTS:

In addition to the required tests at the manufacturer's plant, the Engineer's representative may select specimens at random at the point of delivery or at the job site. Tests on these specimens shall be performed at a local testing facility under the supervision of the Engineer's representative. The cost of such supervision will be borne by the Contracting Agency and all other costs shall be borne by the Contractor.

When the pipe is subjected to an internal hydrostatic pressure of 10 psi for the time shown in Table 743-1, the accumulated moisture on the exterior surface shall not run down the sides in such quantity that will exceed 10 milliliters.

TABLE 743-1	
TABLE OF TESTING TIME FOR PIPES	
Thickness of Wall Inches	**Test Time Minutes**
Up to and including 1	7
Over 1 and including 1½	9
Over 1½ and including 2	12
Over 2 and including 2½	15
Over 2½ and including 3	18
Over 3	21

The loading test shall conform in manner to that specified in ASTM C-301 for 3-edge bearing and shall be applied to all specimens selected for testing.

743.4 IDENTIFICATION MARKS:

Pipe and fittings shall be clearly marked with the name or trademark of the manufacturer, a code number identifying production control and plant location, and extra strength designation.

743.5 JOINTS:

Acceptable joints shall be flexible compression type for bell and spigot pipe or flexible compression couplings for plain-end pipe.

Compression joints and couplings shall conform to the requirements of ASTM C-425.

End of Section

SECTION 744

ABS TRUSS PIPE AND FITTINGS

744.1 GENERAL:

Truss pipe is defined as an internally-braced double-walled ABS composite pipe conforming to ASTM D-2680. When noted on the plans or in the special provisions, gravity sanitary sewer system may be constructed using truss pipe for diameters not exceeding 15 inches.

Truss pipe shall have both ends of each pipe length sealed at the factory such that the inert filler material between the two concentric thermoplastic tubes is impervious. All field cuts shall be sealed according to the manufacturer's recommendations.

744.2 COUPLINGS AND FITTINGS:

Fittings for truss pipe may include couplings, wyes, tees, elbows, caps, plugs adapters, manhole water stops and clamps. All couplings and fittings shall be assembled by a chemically welded method. Solvent shall be of the type recommended by the pipe manufacturer. Each solvent weld type coupling or fitting shall be accurately formed and entirely compatible in jointing the pipe to assure a leak-proof joint. Couplings and fittings shall be manufactured from the same material as the pipe except that caps, plugs and adapters may be fabricated or molded from rubber, polyurethane or other suitable compounds. The couplings and fittings shall have chemical and physical properties equal or superior to the pipe itself.

744.3 SOLID WALL PIPE AND FITTINGS:

744.3.1 General: When noted on the plans or in the special provisions, Sewer and Drain Solid Wall Pipe and Fittings may be used for 4-inch and 6-inch service lines, risers and fittings.

744.3.2 Material: Sewer and Drain Solid Wall Pipe shall be manufactured of virgin ABS compound as specified in ASTM D-1788, Types I and IV, excepting that the minimum heat deflection temperature (ASTM D-648) shall be 180°F.

744.3.3 Strength: Test samples of pipe, 6 inches long, shall be cut from full length sections and tested by the method outlined in ASTM D-2412. The pipe shall be deflected at least 35 percent without failure and the stiffness at 5 percent deflection shall equal or exceed the value listed in Table 744-1 below after the test samples have been immersed in a 5 percent solution by weight of sulfuric acid and n-Heptain for a period of 24 hours prior to testing. Failure is defined as rupture of the pipe wall.

Stiffness factor may be computed by the method outlined in ASTM D-2412 or by dividing the load in lbs/linear inch by the deflection in inches and 5 percent deflection ($F/\Delta Y$ in Table 744-1).

TABLE 744-1

MINIMUM STIFFNESS REQUIREMENTS

Nominal Size	$F/\Delta Y$ 2.5% min.
4″	55 lb./in.^{2}
6″	55 lb./in.^{2}

744.3.4 Couplings and Fittings: All couplings and fittings shall be assembled by a chemically welded method. Each solvent weld type coupling or fitting shall be accurately formed and entirely compactable with the Sewer and Drain Solid Wall Pipe to assure a leak proof joint. Couplings and Fittings shall be manufactured from the same material as the pipe except that caps, pugs and adapters may be fabricated or molded from rubber, polyurethane or other suitable compounds. The couplings and fittings shall have chemical and physical properties equal or superior to the pipe itself.

744.4 MANHOLE CONNECTIONS:

A clamp gasket or approved equivalent method shall be provided at manhole entry or connection to reduce infiltration and exfiltration. Where precast manholes are used, entrance holes must be large enough to allow for proper grouting around the manhole gasket.

744.5 CERTIFICATION:

A certificate from the manufacturer shall be furnished attesting that the pipe meets the requirements of ASTM D-2680.

744.6 IMPERFECTIONS:

Any imperfections which in the opinion of the Engineer may adversely affect the performance of the pipe or joints shall be cause for rejection.

744.7 INSTALLATION AND TESTING:

Truss pipe shall be installed in accordance with applicable provisions of Section 615. In addition to the tests prescribed in Section 615, the Engineer may, at his option, require a deflection test on all or any part of the line. Any pipe which shows deflection in excess of 5% shall be removed and replaced at no cost to the Contracting Agency.

End of Section

SECTION 745

PVC SEWER PIPE AND FITTINGS

745.1 GENERAL:

This specification covers the requirements of polyvinyl chloride (PVC) plastic sewer pipe and fittings for gravity flow sewers and building connections. When noted on the plans or in the special provisions, gravity sanitary sewers may be constructed using PVC pipe for diameters not exceeding 15 inches. Pipe, fittings, couplings and joints shall be in conformance with the requirements of ASTM D-3034, SDR-35, except as modified herein.

745.2 MATERIALS:

745.2.1 Caps and Plugs: Caps and plugs for building connections may be molded or fabricated from rubber, polyurethane or other suitable compound.

745.2.2 Gaskets: Rubber gaskets shall be manufactured from a synthetic elastomer and shall comply in all respects with the physical requirements specified in ASTM F-477.

745.2.3 Lubricant: The lubricant used for assembly shall have no detrimental effect on the gasket or on the pipe.

745.4 JOINING SYSTEMS:

Joints for the piping system and fittings shall consist of an integral bell gasketed joint designed so that when assembled, the elastomeric gasket located within the bell is compressed radially on the pipe or fitting spigot to form a positive seal. The joint shall be designed so to prevent displacement of the gasket from the joint during assembly and when in service.

All pipe shall have a home mark on the spigot end to indicate proper penetration when the joint is made.

The belt and spigot configurations for the fittings shall be compatible to those used for the pipe.

Joints shall provide a permanent seal against exfiltration and infiltration. All surfaces of the joint upon which the gasket may bear shall be smooth and free of any imperfections which could adversely affect sealability.

The assembly of the joints shall be in accordance with the pipe manufacturer's recommendations.

745.5 FITTINGS:

Fittings for PVC pipe may include elbows, wyes, tee wyes, double bell couplings, manhole couplings, manhole adapter rings, plugs, caps, adapters and increasers.

Manhole couplings shall be manufactured from asbestos cement and incorporate an elastomeric gasket moisture barrier.

745.5.1 Manhole Connections: A manhole adapter gasket or approved equivalent method shall be provided at manhole entry or connection to prevent infiltration and exfiltration. Where precast manholes are used, entrance holes shall be large enough to allow for proper grouting around the manhole ring.

745.6 CERTIFICATION:

A certificate from the manufacturer shall be furnished certifying that the pipe and fittings meet the requirements of ASTM D-3034, SDR-35, $F/\Delta Y = 46$ psi at 5% deflection.

745.7 IMPERFECTIONS:

Any imperfections which in the opinion of the Engineer may adversely affect the performance of the pipe or joints shall be cause for rejection.

End of Section

SECTION 750

IRON WATER PIPE AND FITTINGS

750.1 CAST IRON WATER PIPE:

All cast iron water pipe shall be designed in accordance with AWWA C-101.

Cast iron water pipe may be designed for either 18/40 or 21/45 physicals and shall conform to AWWA C-106 or AWWA C-108.

Except as otherwise provided cast iron or water pipe shall be designed to meet internal pressure of 150 psi, external cover of 5 feet, and standard Laying Condition B.

Cast iron pipe shall be nominal 18 foot lengths.

Pipe shall be cement mortar lined and seal coated in accordance with AWWA C-104.

750.2 DUCTILE IRON WATER PIPE:

All ductile iron water pipe shall be designed in accordance with AWWA C-150 and shall be manufactured in accordance with AWWA C-151. The class shall be as designated in the plans or special provisions.

Pipe shall be cement mortar lined and seal coated in accordance with AWWA C-104.

750.3 JOINT REQUIREMENTS:

Push-on joints for cast iron or ductile iron water pipe shall conform to AWWA C-111 and shall include synthetic rubber gaskets and lubricant.

Mechanical joints for cast iron or ductile iron water pipe shall conform to AWWA C-111 and shall include cast iron glands, synthetic rubber gaskets, and T-head bolts and nuts.

Flanged joints for cast iron or ductile iron water pipe shall be as detailed on the plans or as designated in the special provisions.

The following are approved joint restraint methods for use with ductile iron pipe: Flanged joint; Ebba Iron Inc. Series 1100 Megalug, 4" thru 24"; Pacific States Lock Mechanical Joint; Pacific States Restrained Tyton Joint; U S Pipe TR Flex Joint; US Pipe TR Flex Gripper Ring; Clow Super-lock Joint; American Lok-ring Restrained Joint.

750.4 FITTINGS:

Iron fittings shall be either Gray-Iron or Ductile Iron conforming to AWWA C-110 or AWWA C-153 with a minimum pressure rating of 250 psi. Flanged ends shall conform to AWWA C-110. Push-on and mechanical joints ends shall conform to AWWA C-111.

Fittings shall be cement mortar lined and coal-tar coated in accordance with AWWA C-104.

End of Section

SECTION 752

ASBESTOS-CEMENT WATER PIPE AND FITTINGS

752.1 GENERAL:

These specifications cover asbestos-cement pressure pipe intended for use in supply lines and distribution systems that carry water under pressure.

752.2 CLASSES:

Asbestos-cement pipe shall be manufactured and tested in accordance with AWWA C-400, except as modified herein, for pipe intended for use in water service at maximum operating pressures of 100, 150, or 200 psi. Pipe shall be designated as Classes 100, 150, or 200 respectively, for the corresponding maximum operating pressures. Unless shown otherwise on the plans or specified in the special provisions the minimum acceptable shall be Class 150.

752.3 MANUFACTURE:

The joining ends of the pipe shall be of such design that they may be properly connected to cast iron fittings and valves which are manufactured within the continental United States that meet applicable AWWA specifications. Pipe in sizes less than 6 inches in diameter may be supplied in either 10 foot or 13 foot lengths, and pipe in sizes 6 inches or greater in diameter shall be supplied in 13 foot lengths, except for random and special short lengths in all sizes as permitted in AWWA C-400.

752.4 INSPECTING AND TESTING:

The uncombined calcium hydroxide in the pipe and couplings shall not exceed 1 percent when tested in accordance with AWWA C-400. Certification of all manufacturer's tests in accordance with AWWA C-400 shall be required. In addition, the Contracting Agency may require all inspection and testing to be performed at the manufacturer's plant or at an approved testing laboratory.

All pipe manufactured outside the United States of America will be subject to inspection and testing by the Contracting Agency at the plant site or at an approved testing laboratory. In addition, all pipe shall have the Underwriters Laboratory, Inc. seal of approval and certification that all tests were in accordance with AWWA C-400.

752.5 FITTINGS:

Fittings shall be cast iron or ductile iron and conform to AWWA C-110 or C-153 for 250 psi minimum working pressure rating cast on fittings. All fittings shall have Ring-Tite, Fluid-Tite, or Weld-Tite bells to fit the class of pipe specified. All fittings shall be cement lined in accordance with AWWA C-104.

752.6 RUBBER RINGS:

Each coupling shall have 2 synthetic rubber joint sealing rings conforming to the requirements of ASTM D-1869. This paragraph shall also apply to the rings furnished for use with fittings. Neoprene shall not be used.

End of Section

SECTION 753

GALVANIZED PIPE AND FITTINGS

753.1 GENERAL:

All galvanized pipe shall be new galvanized welded or seamless steel pipe, conforming to the requirements of ASTM A-120 standard weight, schedule 40.

753.2 CORROSION PROTECTION:

All buried galvanized pipe and fittings shall be protected from corrosion by the application of a tight fitting, extruded or wrapped coating. Coating shall be not less than 0.030 inches in thickness at any point. Extruded coatings shall be of polyethylene or polyvinyl chloride, Extrucoat or equal. Wrapped coatings shall be of polyethylene, polyvinyl chloride, coal tar or asphalt tape, Pretecto Wrap No. 200, Saft-t-Clad FOS No. 655, Tapecoat, Trantex VID-10 or E-12, Polyken No. 900, Scotchrap No. 50 or approved equal Tape shall be edge lapped no less than ¼ inch.

753.3 FITTINGS:

All fittings for screwed galvanized pipes shall be 150 psi, banded, galvanized malleable iron screwed fittings.

753.4 VALVES:

Valves on galvanized pipelines shall be all bronze, double disc, nonrising stem with wheel handle on top, such as Jones, J373 or equal, with bodies, bonnets, yokes and wedges made of material conforming to ASTM B-62.

End of Section

SECTION 754

COPPER PIPE, TUBING AND FITTINGS

754.1 PIPE AND TUBING:

All copper pipe and tubing shall be new seamless copper pipes and tubes, designed for underground water services, plumbing purposes, etc. They shall conform to all the requirements of ASTM B-88, Type K.

All pipe or tubing shall be made of copper free from cuprous oxide, as determined by microscopic examination at a magnification of 75 diameters.

Type K tubing, when furnished in coil, shall be annealed after coiling.

754.2 FITTINGS:

All fittings used in connection with copper pipe or tubing, shall be copper or bronze fittings as manufactured by Jones, Mueller, or approved equal, as shown on standard details.

End of Section

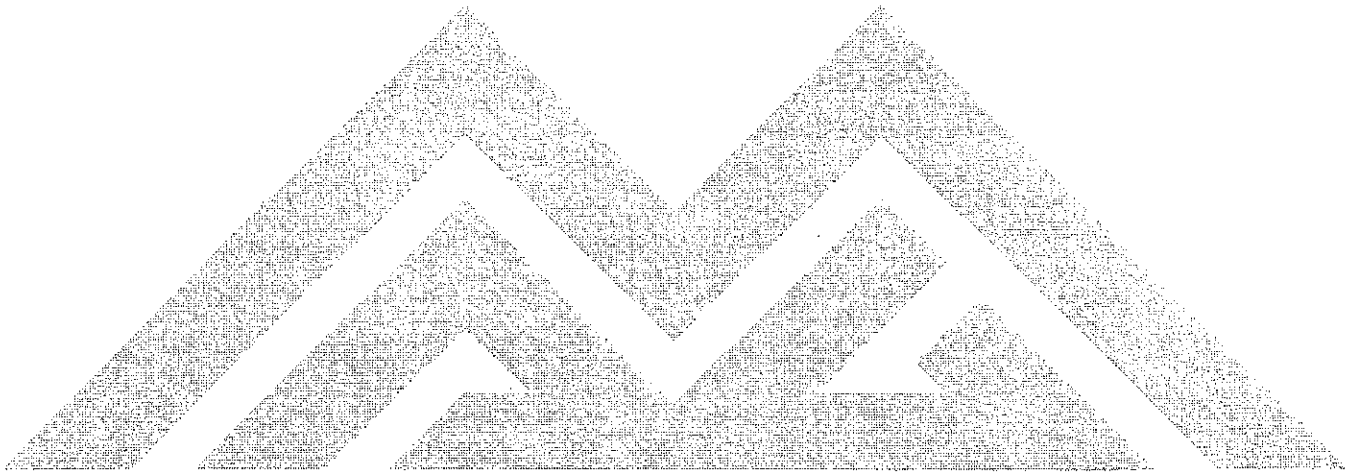

SECTION 755

POLYETHYLENE PIPE FOR WATER DISTRIBUTION

755.1 GENERAL:

This specification is intended to describe water service pipe with a hydrostatic design stress of 620 psi for water at 73.4°F. produced from a high density ultrahigh molecular weight polyethylene pipe compound. Polyethylene pipe used for water distribution shall conform to all the requirements of ASTM D-2239 and with the additional provisions listed herein. This specification describes pipe of the nominal I.D. and O.D. size as manufactured by Carlon, Celanese, Orangeburg, Phillips 66 Drisco pipe and Triangle Aycee and shall provide a water pressure tight joint when used with compression type fittings furnished by Hays, Haystite, Ford Meter Box, Ford Pack Joint, or approved equal.

Pipe may be rejected for failure to comply with any requirements of these specifications.

755.2 MATERIAL:

The polyethylene extrusion compound from which the pipe is extruded shall meet the requirements of Type III, Grade 34, Class C, material as described in ASTM D-1248, except that the melt index shall be determined under a higher temperature than ASTM D-1238. The test condition shall be as specified below under tests of pipe.

The pipe shall be homogeneous throughout and free of visible cracks, holes, foreign inclusions or other defects. The pipe shall be uniform in color, opacity, density, and other physical properties.

755.3 PIPE DIMENSION AND TOLERANCES:

The average inside diameters, wall thickness, and respective tolerances shall be, for any cross section, as shown in ASTM D-2239, when measured in accordance with ASTM D-2122.

The standard thermoplastic pipe dimension ratio (SDR), the ratio of the pipe diameter to wall thickness, shall not exceed 7 for 160 psi design pressure.

755.4 MINIMUM BURST PRESSURE:

The minimum burst pressure for pipe made from Type III, Grade 34, Class C, polyethylene compound, Designation Code: PE-3406, when determined with at least 5 specimens shall be at least equal to 630 psi for water at 73.4°F. Pressures shall be determined in accordance with ASTM D-1599.

755.5 SUSTAINED PRESSURE:

In addition to passing the sustained pressures given in ASTM D-2239 for a temperature of 100°F. and 73.4°F. the pipe shall withstand, without failing, ballooning, bursting or weeping for a period of at least 300 hours, at 194 ± 2°F., 113 psi test pressure for ¾ inch pipe and 112 psi for 1 inch pipe. These test pressures have been calculated on a basis of a 450 psi fiber stress. The test procedure outlined in ASTM D-1598, shall be followed.

755.6 TESTS OF PIPE:

The pipe must be able to meet all tests that are specified in ASTM D-2239, and the following test for melt index, as determined in ASTM D-1238. Pellets of the original resin, placed into the testing device shall have flow rates as follows:

(A) Less than 0.5 grams per 10 minutes at 310°C with a plunger load of 27.5 pounds for pipe or tubing extruded by the Allied Chemical Process.

(B) Less than 3 grams per 10 minutes at 190°C with a plunger load of 47.65 pounds for pipe and tubing extruded by the Phillips Extrusion Process.

755.7 CERTIFICATION BY MANUFACTURER:

Each Contractor must be able to furnish a certification from the manufacturer of the pipe that the polyethylene plastic pipe is of uniform quality and will fully comply with these specifications, and that the pipe is manufactured of virgin polyethylene, that no scrap material has been used, and that it is satisfactory for potable water, in accordance with the specifications of the National Sanitation Foundation Testing Laboratories, Inc.

The pipe manufacturer shall further supply a copy of certification from the manufacturer of the polyethylene extrusion compound used to make the pipe that the compound fully complies with these specifications.

The manufacturer must have adequate equipment and quality control facilities to be sure that each extrusion of pipe is uniform in texture, dimension and strength, and have so manufactured this class of pipe in sufficient quantities to be certain that it will meet all normal field conditions of usage.

755.8 PIPE IDENTIFICATION:

The pipe shall be permanently marked indicating size and pressure-temperature rating. The appropriate lettering shall occur on the pipe at least once in every 24 inches. The seal of approval or marking of the testing laboratory shall be included in the marking on all pipe that is intended for transporting potable water.

PE PIPE MARKINGS

REQUIRED MARKINGS, EXAMPLE

Size	—	Pressure	—	Temp Rating	—	Test Lab. Seal
¾"		160 psi		PE 3406		NSF

OTHER MARKINGS (Not required by Spec. to be marked)
(However pipe must comply)

SDR-7 (Shall not exceed 7)

CS-255-63 (This is a commercial standard designation of the U.S. National Bureau of Standard. Any other number (CS———) is wrong)

NOTE: ¾ inch Pipe has I.D. 0.824 inch, O.D. 1.060 inch and 3.328 inch circumference.
¾ inch Tubing is not acceptable and has I.D. 0.681 inch, O.D. 0.875 inch, 2.747 inch circumference and an SDR-9 if shown.

End of Section

SECTION 756

FIRE HYDRANTS

756.1 GENERAL:

Fire Hydrants furnished by the Contractor shall comply with AWWA C-502, supplemented as follows:

756.2 DRAWINGS:

Detail drawings or blue prints showing all components, principal dimensions, construction details and materials used shall be submitted to the Contracting Agency for approval. The Contracting Agency reserves the right to consider the quality, appearance and past performance of fire hydrants when reviewing drawings for approval.

756.3 HYDRANTS:

Fire hydrants shall be dry barrel similar or equal to the Corey or Mueller Improved Type. The inside diameter of the barrel shall be a minimum of 7 inches and the diameter of the main valve seat opening shall be not less than 5 inches. The entire valve assembly shall be effectively sealed against moisture.

All interior ferrous surfaces of the shoe exposed to fluid flow shall be epoxy coated to a minimum dry thickness of 6 mils. Epoxy coatings shall be factory applied by an electrostatic or thermosetting process in accordance with the manufacturer's printed instructions. The epoxy materials used shall be 100% powder epoxy or liquid epoxy that conforms to the requirements of AWWA C-550, and to the prevailing requirements of the Food and Drug Administration and of the Environmental Protection Agency.

Style of inlet connections shall be bell or mechanical joint with accessories, gland, bolts, gaskets and having a 6 inch diameter inlet connection. Facing of the main valve against seats shall be synthetic rubber or balata. The top of the stem or bonnet shall be equipped with the O-ring seal. Hydrants shall be constructed so that extension sections in multiples of 6 inches, with rod and coupling, can be added to increase barrel length. The hose and streamer nozzle connections shall match the standard size and threads per inch of the Contracting Agency. Operating and outlet nozzle cap nuts shall be of solid pentagonal shape. The pentagon shall measure fifteen-sixteenths to thirty-one thirty-seconds inch on side, 1½ inch from point to flat. All barrels above ground shall have a prime coat and painted with two coats of fire hydrant yellow paint. Hydrants shall be constructed so that the standpipe can be rotated to at least 8 different positions and the center of the lowest nozzle shall have a ground clearance of not less than 15 inches.

756.4 MANUFACTURER:

The manufacturer shall guarantee that the hydrant is so constructed that the valve stem will not be bent when hydrant is damaged or broken at or near the grade level. A safety breaking flange or thimble, shall be provided. The friction loss must be guaranteed, by the manufacturer, to satisfy Table 756-1.

TABLE 756-1

MAXIMUM PERMISSIBLE LOSS OF HEAD FOR HYDRANTS

Number of Outlet Nozzles	Nomimal Diameter of Outlet	Total Flow From Outlet Nozzles GPM	Maximum Permissible Head Loss PSI
2	2½″	500	2.0
1	4″	600	2.5

End of Section

SECTION 757

SPRINKLER IRRIGATION SYSTEM

757.1 GENERAL:

All materials and fittings shall be new, of the manufacturer's most current design, and shall bear the appropriate National Association seal of approval for example, NSF, UL, etc. Similar units shall be procured from the same manufacturer and internal parts shall be common and interchangeable. Parts listing and source of supply for replacement parts will be furnished to the Engineer.

757.2 PIPE AND FITTINGS:

The type of pipe material and fittings shall be as designated on the plans or in the special provisions. The type utilized shall comply with one of the following:

757.2.1 Steel Pipe: All steel pipe shall be newly galvanized, standard weight, Schedule 40 conforming with Section 753.

757.2.2 Plastic Pipe: Plastic pipe shall be rigid, unplasticized polyvinyl chloride, PVC 1120 or 1220, with an SDR of 26 or less, complying with ASTM D-1785. Schedule 40 or 315 psi pipe shall be used for the continuously pressurized run on the supplyside of Control Valves. PVC 1120 to 1220, SDR 26, pressure rated at not less than 125 psi shall be used on the discharge side of all control valves.

757.2.3 Pipe Fittings and Couplings:

(A) Steel Pipe Fitting and Couplings — Steel pipe fittings and couplings shall be galvanized, malleable iron, screwed fittings or couplings, conforming with Section 753.

(B) Plastic Pipe Fittings and Couplings — Plastic pipe fittings and couplings shall be either threaded type or slip fitting tapered socket solvent weld type. Schedule 80 pipe only will be used for threaded joints. Tapered solvent weld fittings may be either Schedule 80 or Schedule 40, but in any case, will be equal to or greater than the Schedule and Pressure Rating of the plastic pipe being joined. Tapered fittings shall be sized so that a dry, unsoftened taper cannot be inserted more than halfway into the socket. Plastic saddles and flange fittings are not permitted.

(C) Copper Pipe Fittings and Couplings — Copper pipe fittings and couplings shall conform with Section 754.

757.2.4 Solvent Cement: The solvent cement shall be a solution of Type 1, Grade 1, unplasticized, polyvinyl chloride molding or extrusion compound as specified in ASTM D-1784, or an equivalent PVC resin. The cement shall be free flowing and shall not contain lumps, microscopic undissolved particles or any foreign matter that will adversely affect the ultimate joint strength. It shall show no stratification or separation that cannot be removed by stirring. Container labeling shall be in accordance with ASTM D-2564.

757.3 VALVES AND VALVE BOXES:

757.3.1 General: Valves shall be of the size, type, and capacity designated on the plans or in the special provisions and shall comply with the requirements specified herein.

All valves except garden valves shall be capable of satisfactory performance at a working pressure of 200 psi. Valves shall be designed to permit disassembly to replace sealing components without removal of the valve body from the pipeline.

757.3.2 Gate Valves: Gate valves in size two inches and smaller shall be all bronze double disc wedge type with integral taper seats and non-rising stem. Sizes two and one-half inches and larger shall be iron body, brass trimmed, with the other features the same as for the two inch. Section 753 applies.

757.3.3 Manual Control Valves: Manual control valves shall be brass or bronze, and shall be straight or angle pattern glove valves, full opening, key operated with replaceable compression disc and ground joint union on the discharge end.

757.3.4 Electrical Remote Control Valves: Remote control valves shall be electrically operated, designed for a 24 volt, 60 cycle system. They shall be brass or bronze with accurately machined valve seat surfaces, equipped for flow control adjustment, and with the capability for manual operation. They shall be readily disassembled for repair and the internal parts shall be easily accessible for service even when installed in the line.

The internal valve shall be a normally closed, diaphragm type with slow opening and closing action as protection against surge pressures. Actuation shall be by an encapsulated type solenoid with the solenoid shunt band, tube, and plunger of stainless steel for corrosion protection. A removable and cleanable strainer shall be provided at the control chamber inlet to prevent debris from entering the solenoid operating section.

757.3.5 Garden Valves: Garden valves shall be brass or bronze except for the handle. They shall have a replaceable compression disc, and shall be ¾-inch straight-nosed, key operated and pressure rated for operation at 150 psi.

757.3.6 Quick-Coupling Valves and Assemblies: Quick-coupling valves shall be brass or bronze with built-in flow control and self-closing valve and supplied in ¾-inch size unless otherwise required. When a quick-coupler assembly is specified, it shall consist of the valve, quick-coupler connection and hose swivel. Keys and hose swivel ells shall be furnished as specified on the plans.

757.3.7 Valve Boxes: Valve boxes with locking covers shall be molded, non-corrosive plastic. Applicable ASTM references: D-638.

757.4 BACKFLOW PREVENTER ASSEMBLY:

The backflow preventer assembly shall consist of pressure type or reduced pressure type backflow preventer unit and associated components conforming to the governing code requirements and as shown on the plans. It shall be equal in quality and performance to a "Foundation for Cross-Connection Control and Hydraulic Research."

757.5 SPRINKLER EQUIPMENT:

Sprinkler heads, bubbler heads and spray nozzles shall be of the types and sizes as shown on the plans. All major components shall be brass, bronze, stainless steel, or high impact plastic.

Equipment of one type with similar flow characteristics shall be from the same manufacturer and shall bear the manufacturer's name and identification code in a position where they can be identified after installation.

Fixed head sprinklers shall have a one-piece housing with provisions for interior parts replacement. Pop-up sprinklers shall be designed to rise at least 2 inches during operation. Full or part circle sprinklers shall be interchangeable in the same housing.

Bubbler heads shall be of corrosion-resistant, durable bodies, injection molded out of cycolac, and tapped for ½ inch I.P.S. threads. The bubbler shall be fully adjustable from 0 to 5 gallons per minute and shall have a minimum discharge of 1.7 gallons per minute under pressure of 15 pounds per square inch and a minimum discharge of 2.4 gallons per minute under pressure of 30 pounds per square inch supplied at the head.

757.6 ELECTRICAL MATERIAL:

All equipment and material shall comply with the requirements of the governing code and shall be listed by Underwriters' Laboratories, Inc.

757.6.1 Conduit: Conduit shall be galvanized steel conforming to Section 753.

757.6.2 Conductors: Service line conductors shall be supplied in the size shown on the plans and shall be THW 600 volts insulation rating conforming to ASTM D-2219 or D-2220. Low voltage control conductors shall be Type UF No. 14 AWG copper unless otherwise shown on the plan and shall be UL approved for direct burial installation.

757.6.3 Controller Unit: The controller unit shall be fully automatic, with provisions for manual operation, sized to accommodate the number of stations or control valves included in the system and designated on the plans or in the special provisions. Outdoor models shall be housed in a vandal-resistant, weatherproof enclosure which has a locking cover.

The unit shall require a standard 117 volt, 60 cycle input and provide a 26.5 volt, 60 cycle output and shall incorporate a 14-day programming capacity. The unit shall have a "Master On-Off" switch which will deactivate the controller but allow the day and hour clocks to continue operation.

In addition, it shall include a resettable circuit breaker for unit protection.

Each station timing dial shall have an "Omit" or "Off" position and incremental dial settings for timing controls up to 30 minutes.

End of Section

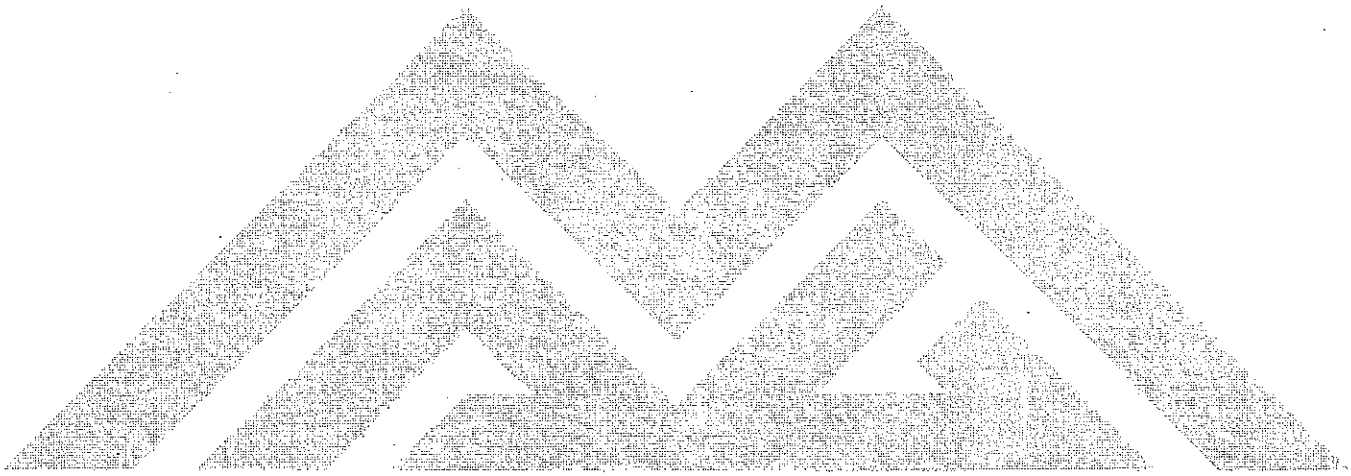

SECTION 758

CONCRETE PRESSURE PIPE - STEEL CYLINDER TYPE

758.1 GENERAL:

These specifications apply to Concrete Pressure Pipe intended for use in water supply pipelines that carry water under pressure. Concrete pressure pipe is specified as follows:

(A) Reinforced concrete pressure pipe-steel cylinder type, pretensioned, shall be designed, manufactured and tested in accordance with AWWA C-303.

Reinforced concrete pressure pipe may be furnished in pipe diameters of sixteen (16) inches through forty-two (42) inches.

Pipe shall be designed by the methods described in Appendix A, AWWA C-303 to resist the internal pressures and external loading conditions designated on the approved plans or in the project specifications.

(B) Prestressed concrete pressure pipe steel cylinder type, shall be designed, manufactured and tested in accordance with AWWA C-301 and AWWA C-304.

Prestressed concrete pressure pipe may be furnished in pipe diameters forty-two (42) inches and larger.

Pipe shall be designed by the methods described in AWWA C-304 to resist the internal pressures and external loading conditions designated on the approved plans or in the project specifications.

758.2 MANUFACTURE:

The Contractor shall submit design calculations, a tabulated layout schedule, and details of specials and fittings to the Engineer for review and approval.

When specified in the project specifications, the manufacturer shall furnish all samples, test reports, test specimens and perform tests as provided in AWWA C-303 or AWWA C-301.

An approved rust inhibitor shall be applied on the exposed portions of the steel joint rings.

The Contractor shall submit an affidavit of compliance from the manufacturer that the pipe and fittings furnished comply with all applicable provisions of AWWA C-301 or AWWA C-303.

The Engineer or his representative shall be allowed access to the manufacturer's plant for the purpose of inspecting the pipe and fittings.

End of Section

SECTION 760

COATING CORRUGATED METAL PIPE AND ARCHES

760.1 GENERAL:

Corrugated metal pipe, pipe arches, and connectors to be used or furnished under this specification shall be manufactured and inspected in conformance with the requirements of AASHTO M-36, and as hereinafter specified. The size, type, and wall thickness of the pipe to be furnished shall be as specified on the project plans or specifications.

760.2 MATERIALS:

Corrugated metal products covered by this specification shall be plain galvanized conforming to the requirements of AASHTO M-36 as modified herein.

The types of bituminous coated pipe shall be as specified by the standard details or special provisions. In addition to the types listed in AASHTO M-190, there will be Type E.

Type E Pipe - Corrugated Metal Pipe with Smooth Metal Liner: The pipe shall be manufactured as per AASHTO M-36, Type 1A except that the lock seam shall be on the tangent of the helical corrugation. The ends of each pipe shall be reformed with two annular corrugations for joining the pipes with approved band couplers. The minimum thickness of the pipe shell shall be as required to support external load with no credit for load carrying support given to the liner. The minimum thickness for the liner shall be 22 gauge (0.034 inches).

760.3 BASE METAL, SPELTER AND FABRICATION:

The nominal pipe diameter shall meet the tolerances of this specification. Elliptical pipe, when specified, shall be shaped after fabrication and coating have been completed.

Helically Corrugated Metal Pipe: The pipe shall be fabricated from flat sheets in coils. The base metal, spelter coating, method of sampling, accepted brands of metal, sheet manufacturer's certified analysis and guarantee, workmanship, marking, inspection and rejection, shall meet the requirements of AASHTO M-36. Structures furnished shall be either full circle, or pipe-arch in accordance with Table 4 of AASHTO M-36, or other shape as shown on the plans. The pipe dimensions shall conform to AASHTO M-36 in all respects, except that the corrugations shall be helical instead of annular. The thickness of the galvanized metal shall be in accordance with project plans or specifications as otherwise specified. Pipe with helical corrugations shall have a continuous lock or weld seam extending from end to end of each length of pipe. The seams shall be fabricated in such a manner that they will not affect the shape or nominal diameter of the pipe and so that they will not create an element of weakness in the pipe.

Spiral Rib Metal Pipe: The pipe shall be fabricated from flat sheets in coils. The base metal, spelter coating, method of sampling, accepted brands of metal, inspection and rejection, shall meet the requirements of AASHTO M-36. Structures furnished shall be full circle on sizes of 18 inch and above as shown in Table 4 of AASHTO M-36. The pipe shall be fabricated with helical rectangular ribs projecting outwardly from the pipe wall with a continuous lock seam extending from end to end of each length of pipe. Spiral Rib Pipe shall consist of two rectangular ribs and one half-circle rib equally spaced between seams. Rectangular ribs shall be ¾ inch wide by 1 inch high. The half-circle rib diameter shall be ½ inch and shall be midway between the rectangular ribs. Maximum rectangular rib spacing shall be 11½ inches. The thickness (gage) of the metal shall be in accordance with project plans and/or specifications or as otherwise specified.

760.4 COUPLING BANDS:

Watertight joints shall be fabricated for corrugated metal pipe by the use of galvanized couplers or connecting bands, bituminous coated where required, with each band overlapping by at least 2 inches. Corrugated coupling bands shall be constructed and connected as specified in AASHTO M-36, except as otherwise required herein. The couplers or bands shall be manufactured of material 2 gages lighter than the gage specified for the pipe material, shall have corrugations or dimples to match the pipe corrugations or end treatment or may be flat, and shall be fastened with bolts. Dimpled coupling bands shall be 10½ inches wide for diameters 12 through 60 inches, and 17 inches wide for diameters above 60 through 96 inches. The 10½ inch wide bands shall have 2 rows of dimples of not less than 7 dimples per row, and the 17 inch wide bands shall have 4 rows of dimples of not less

than 7 dimples per row. The dimple arrangements shall be such that a maximum spread can be attained. The shape of the dimple shall be such that it shall, in general conform to the standard pipe corrugation. The connecting angles for dimpled coupling bands may be riveted as for standard corrugated coupling bands, or may have slotted angles. The bands shall be attached by means of ½ inch nominal diameter carriage bolts. Two bolts are required for pipe up to 36 inches in diameter, 3 bolts for 36 through 60 inch diameters and 5 bolts for pipes above 60 inches in diameter. Plain flat coupling bands and spiral rib flange bands shall have the same width and number of bolts as specified above. Flat coupling bands having a single circumferential corrugation rolled in each edge to match a similar corrugation in the end of each pipe may be 10½ inches wide regardless of pipe diameter and shall be fastened with 2 bolts.

When flanges are provided on the pipe ends, the coupling shall be made by interlocking the flanges with a preformed channel band or other band incorporating a locking channel not less than ¾ inches in width. The depth of the channel shall be not less than ½ inch. The channel band shall have a minimum nominal thickness of 0.079 inches.

760.5 PERMISSIBLE VARIATIONS IN DIMENSION:

The internal diameter of 12 through 24 inch pipe shall not vary more than ±1.5 percent from the design diameter. The internal diameter of 27 through 108 inch shall not vary more than ±1 percent or ⅜ inch, whichever is greater from the design diameter.

Type D Pipe: The design diameter of the metal pipe before paving shall be the diameter shown on the plans plus ¼ inch. The design diameter may vary as above.

End of Section

SECTION 761

STRUCTURAL PLATE PIPE, ARCHES, AND PIPE ARCHES

761.1 GENERAL:

Structural plate pipe, arches, and pipe arches shall be of the sizes, gages, and dimensions designated on the plans or in the special provision and as specified herein.

761.2 MATERIALS:

Plates, nuts and bolts shall conform to the specifications of AASHTO M-167.

Galvanized surfaces which are damaged shall be repaired in accordance with the provision in Section 771.

Bituminous coating shall conform to the provisions of AASHTO M-190.

Damaged bituminous coatings shall be repaired by the Contractor at his expense by applying bituminous material conforming to AASHTO M-190.

761.3 IDENTIFICATION:

The gages of structural plates will be identified on the plans in accordance with the following:

Each installation will be designated not only by size, but also by symbol indicating the number and gage of plates required. Thus, (412-18) will be used to designate an installation for 1 plate length composed of 4, 12 gage plates and 1, 8 gage plate, the heaviest to be placed in the invert.

761.4 DISTORTION:

In advance of placing backfill material around circular structural plate pipes, the pipe shall be distorted.

Distortion may be performed either at the fabricating shop or in the field.

If the plates are distorted in the fabricating shop, the plates shall be distorted to provide an increase in the vertical diameter of the pipe, after assembly, of approximately 5 percent for the full length. Plates shall be marked in order to assure that they will be placed in proper position.

If the pipes are distorted in the field the method of distortion shall conform to the details shown on the plans. The vertical diameter shall be increased the approximate percentages listed in the following table, throughout that portion of the pipe between shoulder lines.

Pipes using 1 or 3 gage top and side plates — 1 percent

Pipes using 5 or 7 gage top and side plates — 2 percent

Pipes using 8, 10, or 12 gage top and side plates — 3 percent

Between the shoulder lines and the outer ends of the pipe the distortion may decrease uniformly to zero.

End of Section

SECTION 765

RUBBER GASKETS FOR CONCRETE PIPE

765.1 GENERAL:

The joints of concrete pipe shall be O-ring rubber gasket joints conforming to ASTM C-361 except the composition and properties of the rubber gaskets shall be as follows:

All rubber gaskets shall be extruded or molded and cured in such a manner as to be dense, homogeneous, and free from porosity and other imperfections. The tolerance for any diameter measured at any cross section shall be ± one-thirty-second inch. All gaskets shall be manufactured from a synthetic rubber compound in which the elastomer is chloroprene (ASTM-SAE Designation Type SC) exclusively. Said compound shall contain not less than 50 percent by volume of neoprene, shall contain no deleterious substances, and shall conform to Table 765-1.

TABLE 765-1

RUBBER GASKETS

Physical Properties	Value	Method of Test
Tensile strength, Min. psi	1500	ASTM D-412
Elongation at break, Min. %	425	ASTM D-412
Shore durometer hardness, Type A. (1)	40-60	ASTM D-2240
Compression set, Max. % of original deflection, (2)	20	ASTM D-395
Accelerated aging, tensile strength, %, (3)	80	ASTM D-572
Max. increase over original shore durometer value after accelerated aging.	8	ASTM D-2240
Specific Gravity	0.95-1.45 ±0.05	ASTM D-297

(1) Pipe manufacturer shall select value suitable to type of joint.

(2) Use Method B, except disc shall be ½ inch long section of rubber gasket stock.

(3) Percent of tensile strength, after aging by the oxygen-pressure chamber (96 hours, 158 ± 1.8°F. 300 ± 15 psi), of the tensile strength before aging.

It is the intent of these specifications that the gasket container shall be a preformed rectangular groove so constructed that when 2 pipes are joined together the rubber gasket shall be compressed and for all practical purposes substantially fill and be largely confined within the rectangular groove.

The Contractor shall submit for approval details of the shape and size of the gaskets he proposes to furnish. The Contractor shall submit certified test results in triplicate showing the physical properties of the materials used in the manufacturer of gaskets.

End of Section

SECTION 770

STRUCTURAL AND RIVET STEEL, RIVETS, BOLTS, PINS, AND ANCHOR BOLTS

770.1 GENERAL:

All steel, unless otherwise designated on the plans or in the special provisions, shall conform to the requirements of ASTM A-36.

Report of Tests: Before fabrication, the Contractor shall furnish to the Engineer a certified mill report in triplicate, for each identifiable melt of steel or iron from which the material is to be fabricated. The report shall include the chemical and physical tests required by the ASTM specifications.

Additional Tests: The Contracting Agency reserves the right to require and to make additional mill and laboratory tests. The number of such additional tests will be limited as follows, except that in the case of failure of the material to comply with the ASTM requirements, more tests will be made:

Structural steel, 1 complete test for each heat or each 10 tons of identifiable stock. Rivets, 1 complete test for each size. Bolts, 1 complete test for each lot.

Identifiable stock is material for which authentic records of the chemical and physical properties are available.

Test specimens shall be furnished, cut, and machined in accordance with the ASTM specification, for the material to be tested, as referred to herein. Test specimens shall be furnished and machined by the Contractor at no additional cost to the Contracting Agency.

Mill Tolerances: Rolling and cutting tolerances, permissible variations in weight and dimensions, defects and imperfections shall not exceed the limits for structural steel contained in ASTM A-6.

Stock Material: When the Contractor proposes to use material already in stock, he shall notify the Engineer of such intention at least 10 days in advance of beginning fabrication, to permit sampling and testing.

770.2 STRUCTURAL STEEL:

Stock Materials: The Contractor shall select the material he wishes to use from stock. The Contractor shall furnish 3 certified mill reports for each of the heat numbers. Two samples shall be taken by a representative of the Engineer from each heat number, one for the tension test and one for the coldbend test. If the heat numbers cannot be identified, the representative of the Engineer shall select random test specimens from the unidentifiable heats. The number of such test specimens shall be at the discretion of the Engineer. The cost of all tests on stock material shall be borne by the Contractor.

High Strength Low-Alloy Structural Steel: The material shall conform to the requirements of ASTM A-242, A-572/A-572M, A-606, A-607 or A-446 Grades C, D, or E as specified in the special provisions.

Copper Bearing Structural Steel: Copper bearing structural steel shall conform to the requirements of ASTM A-36, A-570, A-611, or A-446 as specified in the special provisions.

770.3 RIVETS:

Stock Material: Rivets taken from identifiable stock shall be accepted by the Engineer in accordance with this specification.

Rivets from unidentifiable stock, for which authentic records of the chemical and physical properties are not available, shall not be used except where shown on the plans or when approved by the Engineer.

High-Strength Structural Rivet Steel: The material shall conform to the requirements of ASTM A-502.

Structural Rivet Steel: The material shall conform to the requirements of ASTM A-502, except that the test specimen shall be bent upon itself when performing the bend test.

770.4 BOLTS:

Unfinished Bolts: The bolts shall have square heads and square nuts unless otherwise specified. The bolts shall be long enough to extend entirely through the nut but not more than ¼ inch beyond. Washers shall not be furnished unless specified.

Steel bolts shall conform to the requirements of ASTM A-307, except that steel manufactured by the acid Bessemer process shall not be used.

High Strength Bolts: High strength bolts shall conform to the provisions of the specification for the design, fabrication and erection of structural steel for buildings of the AISC.

770.5 ANCHOR BOLTS:

Anchor bolts shall be manufactured from steel conforming to ASTM A-36 or A-307.

770.6 MILD-STEEL FORGINGS FOR STRUCTURAL PURPOSES:

Steel forgings shall be made from steel of forging quality and shall conform to the requirements of ASTM A-668. They shall be Class C forgings with a maximum carbon content of 0.35 percent and shall be given a thorough annealing. The metal shall have a minimum Brinnel hardness number of 130, and a maximum of 190, when tested in accordance with ASTM E-10.

End of Section

SECTION 771

GALVANIZING

771.1 GENERAL:

Materials shall be hot-dip galvanized and the weight and uniformity of coating determined in accordance with the standard specifications given in Table 771-1.

TABLE 771-1

GALVANIZING SPECIFICATIONS

Material	ASTM Spec.	Wt. of Coating Oz./Sq. Ft. (Min.)
Corrugated Metal Pipe	A-444	1.80
Flat Steel or Iron Sheets	A-525	1.25
Iron or Steel Wire	A-116	.80
Chain Link Fabric	A-392	1.20
Barbed Wire	A-121	.50
Steel Pipe Rails	A-53	1.80
Structural Shapes, Tie Rods, Ornamental Iron Railings, Handrails, Manhole and Catch Basin Steps, and Curb Armor	A-123	2.00
Bolts, Nuts, Washers, Anchor Bolts, Packing Spools, Gray Iron and Malleable Iron Castings and Steel Castings	A-153	1.25

771.2 WORKMANSHIP:

The galvanizing shall be applied in such a manner that the spelter will not peel off. The finished product shall be free from blisters and excess spelter, and the coating shall be even, smooth, and uniform throughout. Machine work, die work, cutting, punching, bending, welding, drilling, thread cutting and other fabricating shall all be done as far as is practicable before the galvanizing. No member shall be galvanized which is out of alignment. All members (nuts, bolts, washers, etc.) shall be galvanized before a structural unit is assembled. All uncoated spots or damaged coatings due to poor workmanship, rough handling, or any other reason shall be cause for rejection.

771.3 TEST COUPONS:

Test coupons for determining the quality of the galvanizing shall be wired to the materials to be galvanized before immersion in such a manner as to represent the amount of coating deposited on the materials.

771.4 REPAIR OF GALVANIZED SURFACES:

Unless otherwise specified, where galvanized surfaces are field or shop cut, broken, burned or abraded, thus breaking the galvanizing, the locations thus damaged shall be repaired to the satisfaction of the Engineer with zinc dust-zinc oxide coating conforming to AASHTO M-36.

End of Section

SECTION 772

CHAIN LINK FENCE

772.1 GENERAL:

All material shall be new and, upon request, the Contractor shall furnish to the Contracting Agency, a certification of inspection stating that the materials have been manufactured, sampled, tested and inspected so as to meet the requirements for its type as specified below.

772.2 POSTS, RAILS AND BRACES:

Posts, rails and braces shall be constructed of pipe in conformance with types A, B or C below. Unless specifically designated by type in the plans or specifications, the Contractor may utilize any of the three types. The posts and rails in this section will cover fencing up to 12 feet in height with post spacing not to exceed 10 feet. The nominal outside dimensions and minimum weights shall be in accordance with Table 772-1. The manufacturer or his representative shall legibly mark each length of pipe by rolling, stamping or stenciling to identify the product by product name, ASTM standard, etc. and the country of manufacture.

Type A: Pipe shall be black steel, welded or seamless, hot-dipped zinc coated, manufactured in conformance to ASTM F-1083, plain end, standard weight (schedule 40). The hot-dipped zinc coating (galvanized) shall be applied both inside and outside with not less than 1.8 ozs. per square foot ± 0.1 ozs.

Type B: Steel used in the manufacturing of the pipe shall be hot-rolled strip steel in compliance with ASTM A-569 having a minimum yield strength of 50,000 psi. The pipe will be manufactured by electric welded cold-formed process per ASTM A-500. The exterior surface will be triple coated and the interior surface single coated per ASTM F-1234. The triple coated external surface shall be hot-dipped zinc coated (galvanized) having a weight of not less than 1.0 ozs. per square foot ± 0.1 ozs., followed by a chromate conversion coating, having a weight not less than 1.05 micro ounces per square foot ± 0.353 micro ounces (30 micrograms per square inch ± 15 micrograms) and an acrylic coating having a thickness of 0.0005 inches ± 0.0002 inches. The internal surface shall be coated with a zinc base paint having a 90% zinc powder loading and having a minimum thickness of 0.0005 inches.

Type C: Steel used in the manufacturing of the pipe shall be strip steel in compliance with ASTM A-446 Grade D having a minimum yield strength of 50,000 psi. Both sides of the strip shall be hot-dipped zinc coated (galvanized) per ASTM A-525 having the weight of not less than 1.0 oz. per square inch ± 0.1 oz. The zinc coating will form the first coat of a triple coated external surface and the final coat of the interior surface. The pipe will be manufactured by electric welded cold formed process per ASTM A-669. After manufacturing, the final two external coatings shall be a chromate conversion having a weight of not less than 1.05 micro ounces per square inch ± 0.353 micro ounces (30 micrograms per square inch ± 15 micrograms) and an acrylic coating having a thickness of 0.0005 inches ± 0.0002 inches.

772.3 CHAIN LINK FABRIC:

Chain link fabric shall conform to the requirements of ASTM A-392 (Zinc-Coated) or ASTM A-491 (Aluminum-Coated). The coating process must leave the fabric completely free of barbs, icicles, or other projections which might be hazardous. The wire used in the manufacture of the fabric shall be 11 gage for all fence 60 inches or less in height and shall be 9 gage for all fence over 60 inches in height unless otherwise specified.

All chain link fabric shall be woven into approximately 2 inch mesh. Fabric less than 60 inches wide shall have knuckled finish on the top edge, and twisted and barbed finish on the bottom edge. Fabric 60 inches or greater in width shall have twisted and barbed finish on both edges. Barbing shall be done by cutting the wire on the bias.

772.4 TENSION WIRES AND FABRIC TIES:

Tension wires shall be at least 7 gage galvanized coil spring steel wire per ASTM A-824. Ties used to fasten the fabric to posts, rails, and gate frames shall be not smaller than 11 gage galvanized steel, 6 gage aluminum wire, or approved non-corrosive metal bands.

Tension bars used in fastening fabric to end and corner posts and gate frames shall be galvanized high carbon steel bars not smaller than three sixteenths inch x ¾ inch.

TABLE 772-1

FENCE MEMBER SIZES & WEIGHTS

USE	FENCE HEIGHT (Feet)	NPS DESIGNATOR	OUTSIDE DIAMETER (Inches)	WEIGHT (Lb/Lf Minimum)	
				TYPE A Schedule 40	TYPE B and C
FENCE POSTS					
End, corner, slope, pull and strain posts	Less than 6	2	2.375	3.65	3.12
	6 and over but less than 9	2½	2.875	5.79	4.64
	9 and over but not over 12	3½	4.000	9.11	6.56
Line posts	less than 6	1½	1.900	2.72	2.28
	6 and over but less than 9	2	2.375	3.65	3.12
	9 and over but not over 12	2½	2.875	5.79	4.64
GATE POSTS					
Single swing gates 6 feet or less in width or double swing gates 12 feet or less	less than 6	2	2.375	3.65	3.12
	6 and over but not over 12	3½	4.000	9.11	6.56
Single swing gates over 6 feet but not over 13 feet in width or double swing gates over 12 feet but not over 26 feet in width	—	3½	4.000	9.11	6.56
Single swing gates over 13 feet but not over 18 feet in width of double swing gates over 26 feet but not over 36 feet in width	—	6	6.625	18.97	—
Single swing gates over 18 feet in width or double swing gates over 36 feet in width	—	8	8.625	28.55	—
OTHER MEMBERS					
Top rail and braces	—	1¼	1.666	2.27	1.84
Frame for gates	—	1½	1.900	2.72	2.28
Stiffners for gates	—	1¼	1.666	2.27	1.84

Notes to Table 772-1:

- All unit weights shall be subject to the standard mill tolerance of ± 5 percent.
- Posts shall be fitted with tops designed so as to fit securely over the posts and carry a top rail where specified. They shall have a total length of not less than the depth of the concrete footings, as specified, plus the length required above ground. Where no top rail is required, pipe posts shall be fitted with suitable caps.
- Top rail shall be furnished in random lengths of approximately 20 feet where required.

772.5 TRUSS OR TENSION RODS:

Truss or tension rods used in trussing gate frames and line posts adjacent to end, corner, slope or gate posts shall be adjustable ⅜ inch diameter galvanized steel rod. When used in trussing line posts, adjustment shall be provided by means of galvanized, turnbuckle or other suitable tightening devices.

772.6 FITTINGS:

Fittings shall conform to ASTM F-626.

Fittings, hardware, nuts and bolts shall be galvanized.

Couplings to connect the individual lengths of top rail shall be of the outside sleeve type at least 7 inches long. The bore of the sleeves shall be sufficiently true to maintain adjacent lengths of rail in alignment.

Extension arms for barbed wire on pipe posts shall be of 13 gage steel or heavier, single piece construction and a type that can be attached to the tops of the posts. Extension arms shall carry 3 wires at approximately 5½ inch centers in a plane approximately 45 degrees from the vertical, inclined as shown on the plans or as directed by the Engineer.

772.7 BARBED WIRE:

Barbed wire shall be 4 point pattern, composed of 2 strands of 12½ gage galvanized steel wire with barbs spaced 5 inches apart and shall conform to ASTM A-121.

End of Section

SECTION 775

BRICK AND CONCRETE BLOCK

775.1 BRICK:

Brick shall be whole, sound, and hard burned and shall give a clear ringing sound when struck together. They shall be uniform in quality and shall be culled or sorted before delivery to the work.

775.2 MANHOLE BRICK:

Sewer and water manhole brick shall conform, except for dimensional tolerances, to the requirements of ASTM C-32, Grade MM.

Manhole brick shall conform to Table 775-1.

TABLE 775-1

MANHOLE BRICK DIMENSIONS

Brick	Inches Depth	Inches Width	Inches Length
Standard Size	2¼	3½	7½
Allowable Variations	±⅛	±⅛	±¼

The following paragraphs shall be added to the section on visual inspection:

No individual brick shall be rejected unless it shows visual evidence of major cracking. A major crack is defined as one that has at least one complete separation, for a distance of 1¾ inches, through the brick in any direction, including any cored area. Such a crack shall be regarded as affecting the serviceability of the brick and shall be rejected and not used in the structure.

Fifty bricks may be sampled at random intervals from any cube for visual inspection. Of the 50 samples, 45 must pass visual inspection for major cracks. Should less than 45 pass, the cube of brick shall be rejected and the brick must not be used in the structure.

775.3 BUILDING BRICK:

Building brick shall conform to the requirements of ASTM C-62, grade MW.

775.4 FACING BRICK:

Facing brick shall conform to the requirements of ASTM C-216, Grade MW, Type FBS. The size, color, and texture shall be as specified on the plans or as approved by the Engineer.

775.5 MORTAR, GROUT AND PLASTER:

The class shall be specified in the special provisions and conform to Section 776.

775.6 CONCRETE BLOCK:

Masonry units shall conform to ASTM C-90 for Grade N-1 (1000 psi) units with the following modifications:

Units shall be fully cured and shall have been made not less than 28 days prior to delivery.

Moisture content at time of delivery shall not exceed 30 percent of the minimum absorption value of the units, and Contractor shall provide any protection he deems necessary to maintain units in this condition until time of use.

The linear change from saturated to cool oven dry shall not exceed .0072 inches per linear foot or .06 of 1 percent.

Except as otherwise called for on the plans or specified, masonry units shall be made with sand-gravel aggregate or lightweight aggregate at the Contractor's option, but all units used in the work shall be of one type. Lightweight aggregates for use in concrete masonry units shall be restricted to expanded clay, expanded shale, scoria, volcanic cinders, pumice or a combination thereof and shall conform to ASTM C-331.

Size of units shall be as indicated on the plans.

Submit for approval of the Engineer at the site not less than 5 samples of units to show the full variance of texture and full range of color. Units used in the work shall match the approved samples. These samples will be tested for strength.

775.6.1 Mortar and Grout: Mortar and grout used for concrete block construction shall conform to Section 776.

End of Section

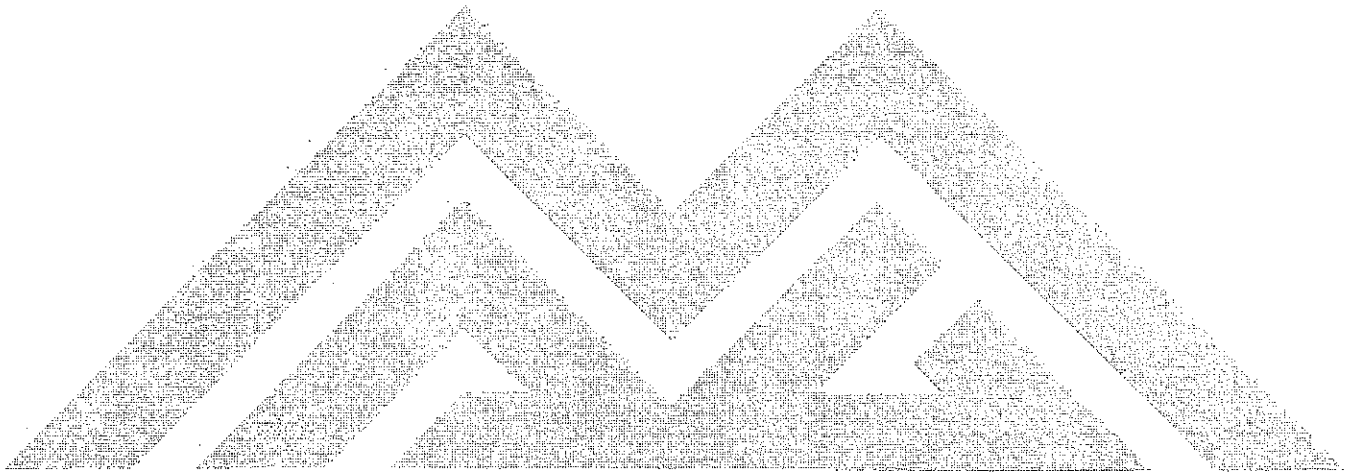

SECTION 776

MASONRY MORTAR AND GROUT

776.1 GENERAL:

Masonry mortar and grout shall consist of a mixture of cementitious material and aggregate to which sufficient water has been added to bring the resulting mixture to the desired consistency.

Table 776-1 and 776-2 indicates the average compressive strength obtained when the cementitious material, aggregate, and water (the required amount to provide a flow of 110 ± 5 percent) are combined in the proportion shown in Table 776-3 and 776-4.

The mortar or grout to be used will be designated by class in the special provisions and the correct proportions of cementitious materials and aggregate will be combined with the minimum amount of water to provide a workable mixture.

Retempering of the mortar or grout will not be a standard practice and the Engineer's approval will be required for any exception.

TABLES 776-1 & 776-2

MASONRY MORTAR AND GROUT COMPRESSIVE STRENGTH

Table 776-1 Masonry Mortar		Table 776-2 Grout	
Type	**Compressive Strength 28 Days (psi)**	**Type**	**Compressive Strength 28 Days (psi)**
A	5500	Fine Grout	2500
B	5000	Coarse Grout	2500
C	4000		
D	3000		
M	2500		
S	1800		

TABLE 776-3

MASONRY MORTAR PROPORTIONS BY VOLUME

Type	Portland Cement	Hydrated Lime	Aggregate ASTM C-144
A	1	0	1
B	1	0	1½
C	1	0	2
D	1	0	2½
M	1	¼	2¼ to 3
*S	1	½	2¼ to 3

*Masonry cement type S may be substituted for the cementitious material. Prior approval of the Engineer is required.

TABLE 776-4

GROUT FOR REINFORCED MASONRY PROPORTIONS BY VOLUME FOR FIELD BATCHING

Type	Portland Cement	Fine Aggregate (ASTM C-404)	Coarse Aggregate (ASTM C-404)
Fine Grout	1	2¼ to 3	0
Coarse Grout	1	2½	1 to 2

776.2 PORTLAND CEMENT:

The cement used shall conform with Section 725. For volumetric proportioning an unopened sack of cement weighing 94 pounds shall be considered as having a 1 cubic foot volume.

In proportioning the cement, it shall be measured loose, without shaking or compacting, in measuring devices of known capacity.

776.3 AGGREGATE:

The aggregate used shall conform with Section 701. It shall be approved by the Engineer prior to being utilized on the job. Any change of course will require additional approval or this neglect will be considered as sufficient cause for rejection of work.

In proportioning the aggregate, it shall be measured damp, loose without shaking or compacting, in measuring devices of known capacity.

776.4 MASONRY CEMENT:

Masonry cement used shall conform to ASTM C-91 with the exception that the average compressive strength shall not be less than 2500 psi at 28 days.

776.5 HYDRATED LIME:

Hydrated lime used shall conform to ASTM C-207, Type S.

776.6 WATER:

The water used shall conform to section 725.

776.7 ADMIXTURES:

Admixtures, unless prescribed in the special provisions, will not be used without prior approval of the Engineer.

776.8 TESTS:

776.8.1 Mortar: If in the opinion of the Engineer there is sufficient cause to question the quality of the mortar being utilized, random field test in accordance with ASTM C-780 Annex A-1 and A-6 will be performed. For this area, the penetration of the cone penetrometer correlating to a flow of 110 ± 5 percent is 40 ± 3 mm.

776.8.2 Grout: If required, tests shall be performed in accordance with Uniform Building Code Standard No. 24-23 Section 24.2301.

End of Section

SECTION 778

LUMBER

778.1 GENERAL:

Unless otherwise specified or shown on the plans, all lumber shall be Douglas Fir or graded pine and shall be selected as to grade and shall conform in all particulars to the standard grading and dressing rules of the West Coast Lumber Inspection Bureau.

Plywood shall be not less than 3 ply, manufactured and graded in accordance with the standard grading rules of the APA.

Lumber for uses listed shall not be lower than the following grades:

	Uses	Grade
(A)	Permanent Construction, such as bridges and cluverts.	Select Structural, for beams and stringers; Construction, for balance of structure.
(B)	Minor permanent construction, such as fences, guard rails and posts, pavement headers, bulkheads, retaining structures, etc.	Construction.
(C)	Falsework and studs, and wales for formwork.	Construction, for framing, beams, or timbers.
(D)	Form sheeting for nonshowing surfaces of concrete.	Standard, for boards; shiplap; or any grade of plywood.
(E)	Form sheeting for showing surfaces of ornamental concrete.	C and Better Industrial clear; concrete form grade of plywood; or overlay plywood.
(F)	Form sheeting for curved soffits of bridge & tunnel arches, plastered or unplastered.	Select Merchantable, board; concrete form grade of plywood; or overlay plywood.
(G)	Soffits of beams and girders and slabs between beams and girders; for beam and girder sides, except ornamental concrete; and for headwalls or endwalls of culverts or covered conduits.	Concrete form grade of plywood or overlay plywood.
(H)	Form sheeting for showing surfaces of channel walls or interior surfaces, except floors; for covered conduit and all other showing surfaces not specified above.	Tongue and groove flooring equal to C and Better flat grain; concrete form grade of plywood; or overlay plywood.
(I)	All other lumber.	Construction.

778.2 REDWOOD:

Redwood lumber shall be selected as to grade and shall conform in all particulars to the standard specifications for grades of California Redwood of the California Redwood Association.

Redwood lumber for the uses listed shall not be lower than the following grades:

	Uses	Grade
(A)	Bridges, culverts, and guardrail posts	Dense Structural.
(B)	All other Redwood Lumber	Foundation.

778.3 GRADE MARKING:

Lumber. Each piece of lumber shall bear an official grade mark which, unless authorized otherwise, shall be the grade mark adopted by one of the following associations:

(A) For Douglas Fir and Pine — The West Coast Lumber Inspection Bureau or other agency approved by the Engineer.

(B) For Redwood — The California Redwood Association.

Plywood: Each sheet of plywood shall bear the official stamp of the APA stating the grading of the sheet.

End of Section

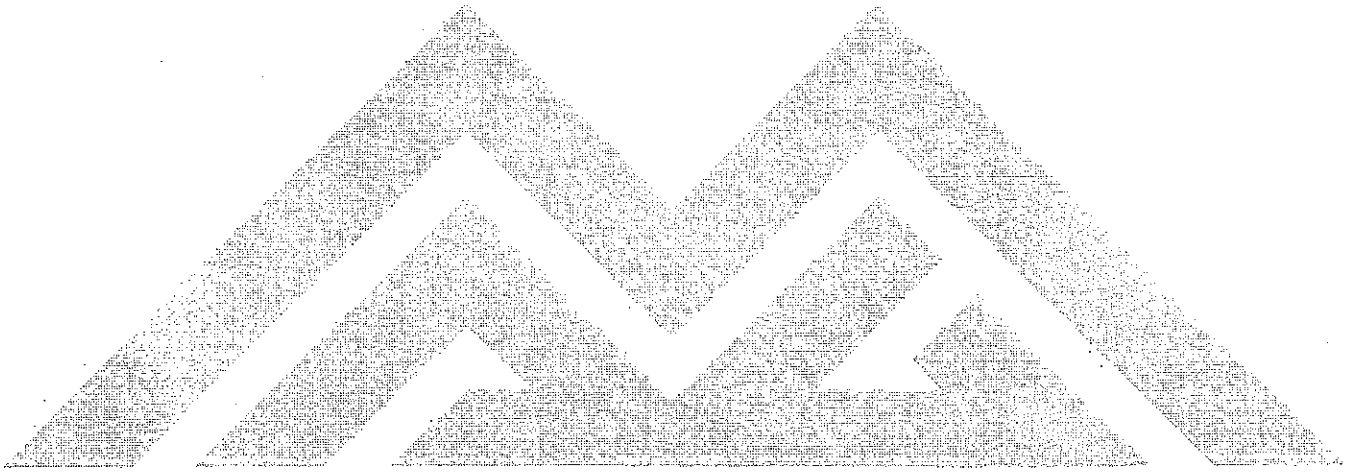

SECTION 779

WOOD PRESERVATIVES

779.1 GENERAL:

This work shall consist of treating lumber, timber, and piling. Lumber, timber, and piling to be treated shall conform to the requirements of the specification of the AWPA and as specified herein.

Where practical, lumber to be treated shall be cut to size and framed, prior to treatment. Proper allowance for shrinkage in the sizes of lumber shall be made by the Contractor where it is necessary to meet definite dimensions shown on the plans.

779.2 OIL TYPE PRESERVATIVE TREATMENT:

Preservatives under this specification shall be creosote, creosote-coal tar solutions, creosote petroleum solutions, or pentachlorphenol in petroleum oils, conforming to AWPA specifications and as specified by the Engineer.

Treatment: The treating operations shall conform to the applicable requirements of the AWPA specifications.

Unless indicated otherwise on the plans or in the special provisions, the amount of preservative to be retained and the treating process to be used for the various types of service shall conform to the appropriate AWPA specification.

Incising: Unless otherwise specified, timber to be treated under this specification that is 3 inches or more in nominal thickness and 4 inches or more in nominal width, shall be incised before treatment as a means of securing penetration of the preservative. If such thickness is less than 4 inches, the material may be incised on the wide faces only; otherwise, all 4 faces shall be incised.

779.3 WATER BORNE SALT PRESERVATIVES TREATMENT:

Preservatives under this specification shall conform to the requirements of AWPA specifications unless otherwise approved in writing by the Engineer, but restricted to the following preservatives:

Chromated Zinc Chloride (CZC)

Tanalith (Wolman Salts)

Ammoniacal Copper Aresnite (Chemonite)

Chromated Zinc Arsenate (Boliden Salt)

Chromated Copper Arsenate (Erdalith)

779.4 FIELD TREATMENT OF CUT SURFACES:

When sawing or drilling is necessary after plant treatment, the cut surfaces shall be thoroughly brushed with 2 coats of the same kind of preservative in conformance with AWPA specification. The maximum protection requirement specified therein shall be met in all instances.

End of Section

SECTION 780

TIMBER PILES

780.1 GENERAL:

All piles shall conform to the specifications of ASTM D-25 for clean peeled Class B piles.

End of Section

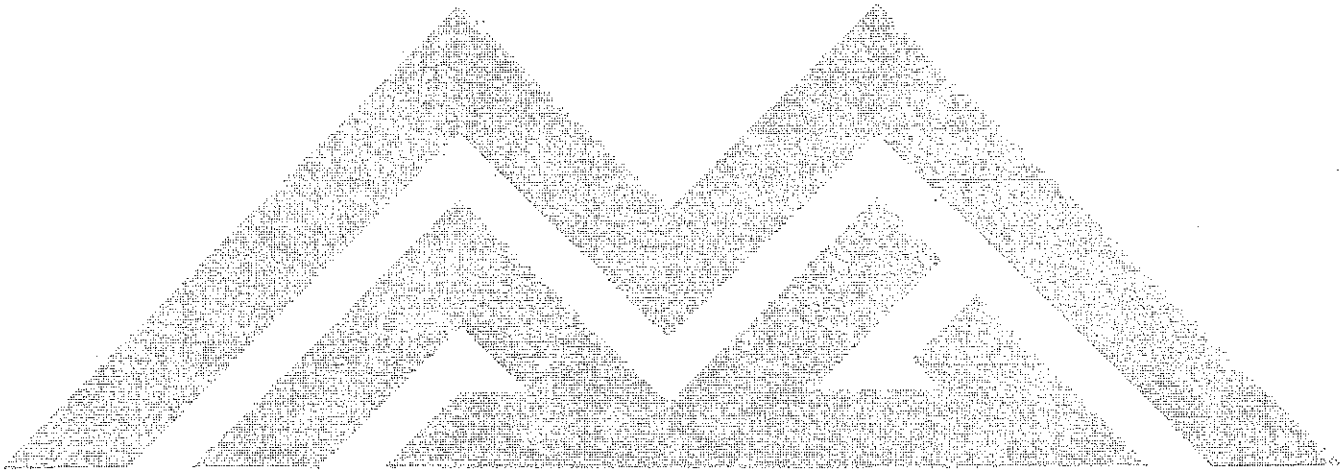

SECTION 781

STEEL PILES

781.1 GENERAL:

Steel piles furnished under this specification shall consist of structural steel shapes that fulfill the requirements prescribed for such material in ASTM A-36 and shall conform to the details and dimensions indicated by the plans and specifications relating directly thereto. The kind and type of steel piling to be used in the work shall be as indicated on the plans or special provisions.

781.2 MANUFACTURING:

Material for sheet piles shall not be made by the acid Bessemer process.

Steel sheet piling shall consist of standard interlocking sheet pile sections.

End of Section

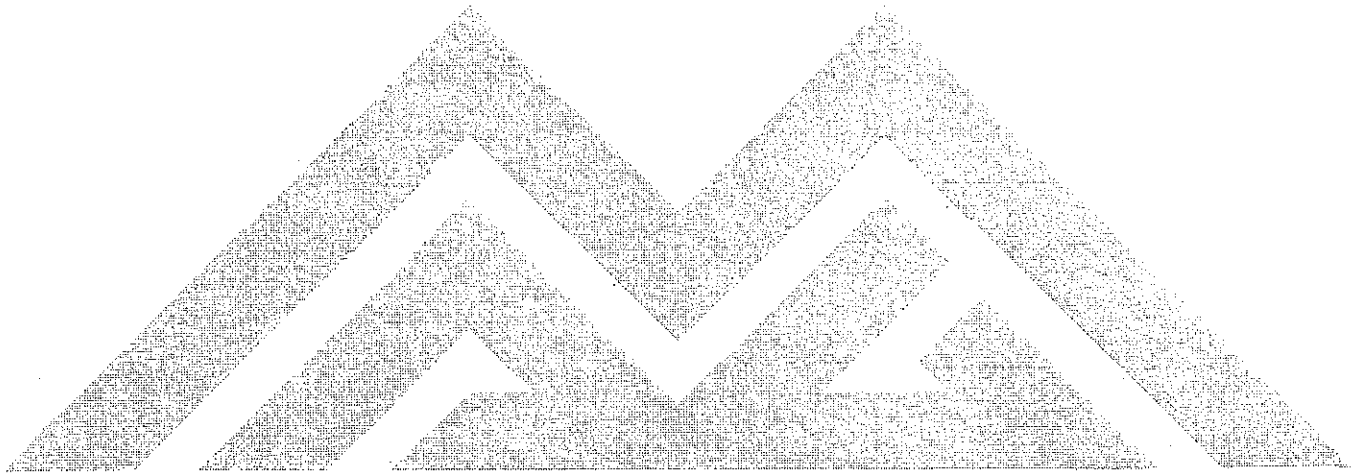

SECTION 782

CONCRETE PILES

782.1 GENERAL:

Concrete piles furnished shall be precast, cast-in-place, prestressed, or centrifugal cast piles. The type to be furnished will be as specified on the plans or in the special provisions.

782.2 MANUFACTURING:

Concrete shall be mixed and proportioned in accordance with the requirements of Section 725. The class of concrete will be as stated on the plans or in the special provisions.

The manufacture of prestressed piles shall be performed in accordance with Section 506. Precast, cast-in-place and centrifugal cast piles shall be manufactured as specified in the special provisions.

End of Section

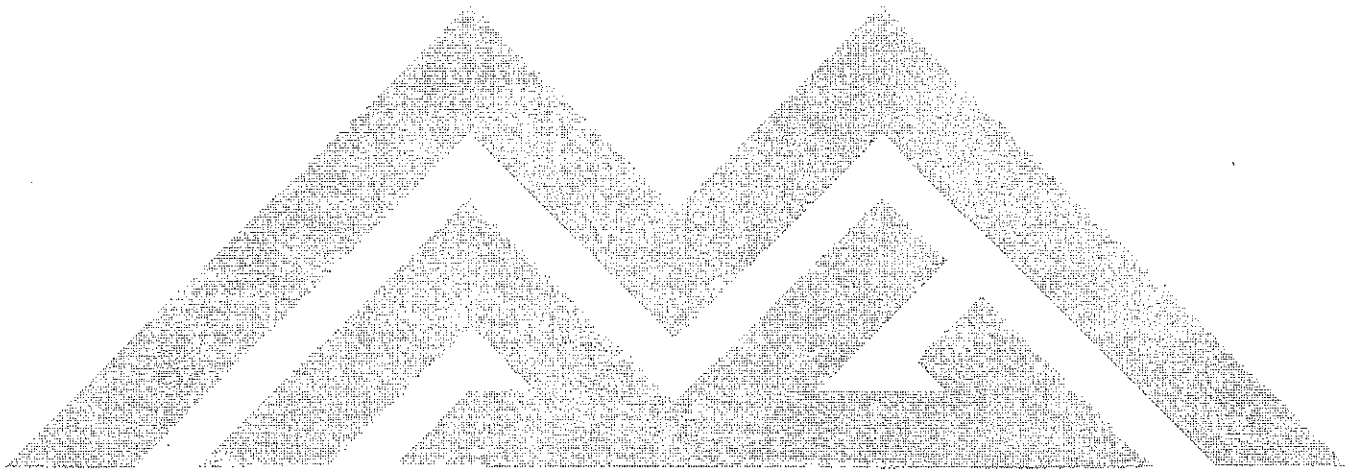

SECTION 785

STEEL CASTINGS

785.1 GENERAL:

The castings shall be true to pattern in form and dimension and free from pouring faults, sponginess, cracks, blowholes, or defects that would affect the service value of the casting.

Blowholes shall not have a depth sufficient to affect injuriously the strength of the castings. Minor defects which do not impair the strength of a casting may, with the approval of the Engineer, be welded by an approved satisfactory means and after welding, the castings shall be annealed, if so required by the Engineer. Castings which have been welded without the permission of the Engineer shall be rejected.

785.2 FINISH:

The dimensions of the finished castings shall be not less than the specified dimensions. Castings shall not be more than 7½ percent overweight.

The bearing surfaces of rockers and rocker plates shall be machined accurately to the dimensions shown on the plans. The final surface shall be produced by a finishing cut. They shall be straight, smooth, and free from flaws.

Chemical analysis shall be performed in accordance with ASTM E-30.

785.3 TEST SPECIMENS:

Test coupons from which tension test pieces are prepared shall be attached to the castings where practicable. If, in the opinion of the manufacturer, the design of the casting is such that test coupons should not be attached thereon, the test coupons shall be cast attached to separate cast blocks. Sufficient coupons shall be cast to represent each lot with additional specimens for use in case retests should be required. A lot shall be considered as all castings in a melt which have constituted part or all of a heat-treatment charge.

Coupons shall remain attached until after the annealing process has been completed. Coupons may be identified by a representative of the Engineer. Where test coupons are cast separately from the castings, a representative of the Engineer may be present at the time of pouring to identify both coupons and castings. Coupons cast separately from the castings shall not be detached from the block to which they are fastened until identified.

The test coupons shall be of such size that test specimens can be machined to dimensions as specified in the ASTM procedure referred to herein. Where a specimen on machining, appears faulty and a true sample of the lot of castings to which it belongs, the representative of the Engineer may substitute another coupon of the lot in question. Test specimens shall be furnished and machined by the Contractor at no additional cost to the Contracting Agency.

785.4 RETESTS:

If the results of the physical test for any lot do not conform to the requirements specified, the manufacturer may reheat-treat such lot. Representative coupons shall be reheat-treated with the lot to serve as retest specimens.

785.5 HIGH-STRENGTH STEEL CASTINGS FOR STRUCTURAL PURPOSES:

Castings shall conform to ASTM A-148, Grade 80-50 except that the steel shall contain not less than 0.60 percent of manganese and not less than 0.20 percent of silicon.

785.6 MILD-TO-MEDIUM STRENGTH CARBON-STEEL CASTINGS FOR GENERAL APPLICATION:

Castings shall conform to ASTM A-27, Grade 65-35. The metal shall have a minimum Brinell hardness number of 130, when tested in accordance with ASTM E-10.

785.7 CASTINGS FOR HIGHWAY BRIDGES:

Steel castings for highway bridges shall conform to ASTM A-486 or AASHTO M-192.

End of Section

SECTION 786

BRONZE CASTINGS

786.1 GENERAL:

The castings shall be true to pattern in form and dimensions and free from defects that would affect the service value of the casting. Minor defects may be repaired with the approval of the Engineer. Chemical analysis shall be made in accordance with ASTM E-54.

786.2 PHYSICAL PROPERTIES:

Expansion and bearing plates shall conform to the physical properties as required in ASTM B-22, for alloy C castings.

The physical test shall be performed on coupons cast integrally with the casting, as described in ASTM B-208, double keel block test bar. The coupons shall remain attached during all heating and cooling cycles to which the casting is subjected. In cases where castings are of such a size or design that it is difficult to cast attached coupons, permission may be granted by the Engineer to cast test coupons independently of the castings.

786.3 WORKMANSHIP:

Castings shall be sound, clean, and free from blowholes, porous places, cracks, and other defects.

Castings that show injurious defects revealed by machine operations or by X-ray subsequent to delivery may be rejected and, if rejected, shall be replaced by the Contractor without charge.

No welding or patching of defects in castings will be permitted unless authorized by the Engineer. Any such welding or patching done without authorization shall be cause for rejections.

786.4 ORNAMENTAL TABLETS:

The letters shall be heavily raised and spaced carefully to secure a uniform and balanced effect over the entire area of the panel. The background of the letter panel shall have a finely-pebbled surface. The model of the tablet shall be submitted to the Engineer for approval before castings are made.

Castings shall be boldly filleted at angles, and the arrises shall be sharp and perfect. Castings shall be true to pattern in form and dimension and shall be free from inclusion of foreign material, casting faults, injurious blowholes, or other defects rendering them unsuitable for the service intended.

The faces and edges of lettering and ornaments shall be carefully hand-tooled sharp and clean. Beveled edges shall be hand-tooled sharp, clean, smooth, and true. Outside borders shall be straight and true and shall be thoroughly polished. Filing and other tool marks shall be removed.

The lettering, the ornaments, and the beveled edges shall be given a fine satin hand finish; the lettering, bevels, and rosettes shall be highlighted; the leaves and scrolls slightly highlighted, but well polished. The pebble background shall be finished in dark statuary bronze, polished as the Engineer may direct.

786.5 EXPANSION AND BEARING PLATES:

The sliding contact faces shall be machined smooth to true planes. If practicable, one plate shall be machined at right angles to the other plate in the set.

End of Section

SECTION 787

GRAY IRON CASTINGS

787.1 GENERAL:

The castings shall be true to pattern in form and dimension and free from pouring faults, spongings, cracks, blowholes, or other defects in locations affecting their strength and value for the service intended. Castings shall be filleted boldly at angles, and the arrises shall be sharp and true.

Before the castings are removed from the foundry, they shall be thoroughly cleaned and the parting lines, gates, and risers ground flush.

787.2 TEST SPECIMENS:

Test coupons shall be cast separately of the castings, using a mold as described in ASTM A-48. A representative of the Engineer may be present at the time a melt is poured to identify both coupons and castings.

Two test coupons are required for each melt poured. Additional coupons shall be cast for use as replacements or in case a retest is required.

A representative of the Engineer may discard and replace specimens which show obvious lack of continuity of metal or if the machining is defective.

The manufacturer shall machine the tension specimens to the dimension specified for specimen B of ASTM A-48, at no additional cost to the Contracting Agency.

When approved by the Engineer transverse tests may be made in lieu of tensile tests, in which case the castings shall meet the requirements of ASTM A-48.

787.3 MANHOLE FRAME AND COVER SETS:

Castings shall conform to ASTM A-48, Class 30. The bearing surfaces of the frames and covers shall be machined and the cover shall seat firmly onto the frame without rocking. Also the frames and covers shall be coated as specified below.

Covers shall be the types and shall be imprinted as shown on the plans or standard details.

787.4 RAILINGS, RAILING POSTS, AND WHEEL GUARDS:

Castings shall conform to ASTM A-48, Class 40.

787.5 ROCKERS, ROCKER PLATE BEARINGS, AND BEARING PLATES FOR BRIDGES:

Castings shall conform to ASTM A-48, Class 50.

Castings shall be machined and finished as specified on the plans provided that tool marks on sliding contact surfaces shall run in the direction of plate movement, or in the case of rocker plate bearings, perpendicular to the rocker movement. Tool marks shall be not more than 1/32 inch apart.

787.6 UNCLASSIFIED CASTINGS:

All castings not specifically classified, shall conform to the requirements of ASTM A-48, Class 30.

End of Section

SECTION 790

PAINT

790.1 GENERAL:

Paint shall be homogeneous, free of contaminants, and of a consistency suitable for the intended use. Finished paint shall be well-ground and the pigment shall be properly dispersed in the vehicle according to the requirements of the paint; and this dispersion shall be of such nature that the pigment does not settle appreciably, does not cake or thicken in the container, or become granular or curdled. Paint and paint materials shall be delivered to the job site in new, unopened air-tight containers appropriately identified with the manufacturer's name, date of manufacture, type of paint or paint material, specifications paint number, and lot or batch number. The container shall have a formula label.

No paint shall be used until at least 7 days have elapsed from the date of manufacture. Lead containing paint shall comply with Subsection 107.5.2.

790.2 PROPRIETARY BRANDS:

For the purpose of this specification, proprietary brands of paint and paint materials shall be construed to mean paint or paint materials conforming to the requirements of this specification and produced for distribution and consumption through regular wholesale and retail outlets. Whenever paint or paint materials are designated on the plans or special provision by a manufacturer's name or catalog reference, any proprietary brand of equal quality will be permitted, subject to the approval of the Engineer. Information required by the Engineer as proof of the comparative quality shall be furnished by the Contractor.

790.3 PAINT COATS:

The first coat of paint applied to an unpainted surface shall be called the prime coat. The paint applied to field connections, welds, rivets, and all damaged or defectively painted or rusty areas on a prime coated surface shall be called a touch-up coat. The paint applied over the prime coat and touch-up coat shall be called the second coat. The final coat of paint shall be called the finish coat.

790.4 MATERIALS:

Materials shall conform in all respects to the requirements of references specifications indicated for such material.

Upon request of the Engineer, the Contractor shall furnish a certification from the manufacturer that the material conforms with this specification.

(A) **Vehicles:**	**Specification:**
Raw Linseed Oil	ASTM D-234
Boiled Linseed Oil	ASTM D-260
Water-Resistant Spar Varnish	Navy Department Specification 52V20
Alkyd Resin	TT-R-266C
Driers	ASTM D-600, Class A or Class B, as applicable
Thinners:	
Xylene	TT-X-916B, Grade A
Turpentine (shall be used in paints used for timber)	ASTM D-13, Gum Spirits
Petroleum Spirits (Mineral Spirits)	ASTM D-235

(B) Pigments	Specifications:
Carbonblack	TT-P-343 Form 1, Class B
Lampblack	ASTM D-209
Red Lead	ASTM D-83
Titanium Dioxide, Non-extended	ASTM D-476, Type II, Class II
Titanium Dioxide, Extended (Titanium Calcium, Rutile)	ASTM D-476
Titanium Dioxide	TT-P-422B, Type III, Class A
White Lead Basic Carbonate	ASTM D-81
Zinc Yellow (Zinc Chromate)	ASTM D-478, Type II
Zinc Oxide	ASTM D-79
Iron Blue	TT-P-385
Iron Oxide, Yellow	TT-P-458A
Iron Oxide, Orange	ASTM D-3721, D-3722, D-3724
Hansa Yellow G	MIL-H-10330
Organic Green Gold	Dupont YT 562-D or equal, specific gravity 161 ±0.05
Chromium Oxide, Green Graphite	TT-P-347

Graphite shall be natural amorphous material (American product) which shall contain not less than 35 percent nor more than 45 percent graphite carbon. The remainder shall be insoluble siliceous material containing a total of not more than 5 percent calcium and magnesium carbonate and sulfate. The pigment shall be ground to such a fineness that not less than 97 percent shall pass a No. 325 sieve. The graphite paste shall be made by grinding the pigment in pure raw linseed oil in the following proportions:

Amphorus Graphite	68.0 percent
Linseed Oil	32.0 percent

(C) Inert Materials:	Specifications:
Diatomaceous Silica	ASTM D-604, Type A
Magnesium Silicate	ASTM D-605

790.5 MIXED PAINTS:

All mixed paints shall, in general, be machine-mixed and shall consist of the pigment of the required fineness and composition, ground to the desired paste consistency in pure raw or boiled linseed oil, to which shall be added the remainder of the vehicle to make paint conforming to the required formula as herein specified.

Paint which has hardened and thickened in the container such that it cannot be readily broken up to a smooth uniform paint of good brushing consistency shall not be used.

All materials used in mixed paints shall conform to the requirements as herein specified. The paint shall be made to satisfactory workable consistency conforming to one of the following formulas for paint as required on the plans or in the special provisions. All percentages shown are by weight.

Any of the following paints which are too thick to have a satisfactory workable consistency shall be thinned with a suitable thinner from the group of thinners herein specified. In no case shall gasoline be used as a thinner.

Fineness of grind for enamel shall conform to Hegman 7 minimum.

The following paints shall conform to the latest ADOT standard specifications for Road and Bridge Construction. All paints, except Paint No. 10 (Aluminum), shall be shipped ready for use.

When Paint No. 1 is specified, it may be Paint No. 1-A or Paint No. 1-B. Paint No. 1-D shall be used only when specifically designated.

Paint Number	Type
1-A	(Red Lead — Linseed Oil)
1-B	(Red Lead — Alkyd Resin)
1-D	(Zinc Chromate)
4	(Dull Black)
5	(Jet Black)
6	(Black — For Timber Primer Only)
7	(White — For Timber Primer Only)
8	(White)
9	(Light Grey)
10	(Aluminum)
11	(White Enamel)
15	(Zinc)

End of Section

SECTION 792

DUST PALLIATIVE

792.1 GENERAL:

Since the establishment of grades will not normally be required prior to the application of this palliative, and since there is always the possibility that the Contracting Agency will grade in this area, the Contracting Agency will not assume any responsibility for the maintenance of this work. The Contractor will, however, be responsible for obtaining satisfactory results within the limits of the materials and the requirements of these specifications.

Sufficient grading shall be done prior to treatment to provide reasonable drainage.

Except as stated in the special provisions, the material to be used shall be the type designated by the Engineer.

792.2 TYPE AND APPLICATION OF MATERIALS:

(A) Asphalt Base Type:

Designation	Specification Requirements
(1) SC 70	In Accordance With Section 712
(2) MC 70	In Accordance With Section 712
(3) RC 70	In Accordance With Section 712
(4) PS 300	Fuel Oils, Pacific Specifications
(5) No. 5	Fuel Oils, Commercial Standard Specifications
(6) No. 5	(Heavy) Fuel Oils, ASTM D-396

Sand shall be uniformly applied over the fresh coat of oil. The amount shall be sufficient to serve as a blotter and insure that pickup and tracking will not occur. This will normally range between 10 and 25 pounds per square yard.

The rate of application of the cutback asphalt shall be approximately 0.3 gallons per square yard.

Application shall be made by an approved pressure-type asphalt distributor truck.

Care shall be taken to prevent the splattering of oil on curbs, sidewalks, fences, buildings, etc., and a shield shall be used where so ordered by the Engineer.

The application of the oil shall be restricted to some extent by weather conditions. The spreading of liquid asphalt will not be permitted when, in the opinion of the Engineer, weather conditions are detrimental to performance of first class work.

(B) Petroleum Resinous Type:

The material shall be a light yellow emulsion. Coherex or approved equal, suitable for use as an agglomerant for soil particles. The emulsion shall contain 60 ± 3 percent of a thermo-plastic resinous petroleum fraction characterized by the following properties:

Specification Designation	ASTM Test Method	Requirements
Viscosity, SUS at 100°F., Sec.	D-88	6000 min.
Residue, %	D-95	60 ± 3
Flash Point, CO, °F.	D-92	400 min.
Specific Gravity, 60/60°F.	D-1298	1.00 min.

The emulsion shall be stable, i.e., should not break when stored in clean closed containers at ordinary temperatures, excluding freezing or boiling, for a minimum of 3 months. It shall be miscible with water in all proportions, including a ratio of 1 part emulsion to 5 parts water. The sequestering agents shall make the preparation stable against hard water, thus permitting dilution of the emulsion with almost all types of water. The emulsion shall be non-corrosive to metal containers. The materials shall penetrate into the soil surface and not form a skin at the surface or a crusted surface.

Immediately after compacting, the 1 to 5 diluted emulsion shall be applied in 1 to 3 applications, as required, at a rate of approximately 0.17 gallons per square yard per application. The material shall be applied by means of a thoroughly cleaned bituminous distributor or other approved means.

(C) Lignin Based Types:

Lignin sulfonates, a residual co-product of wood pulping by the sulphite process in the manufacture of cellulose products. This material may be supplied in either the granulated solid or liquid form, liquid form to contain 50 ± percent lignin solids by weight. The application rate shall be such that the residual lignin solids constitute approximately 1 percent by weight of the soil being treated. One gallon of 50 ± 2 percent solids lignin sulfonate concentrate* will usually result in the required residual content for a soil volume of 1 square yard 6 inches deep.

*Lignin sulfonates are usually diluted to 10 to 25 percent solids before application. The rate of dilution is variable and shall be determined by the Engineer.

Application of this material may be made by either a pressure type water sprinkling truck or an asphalt distributor; however, the same precautions to prevent contamination of adjacent objects will be required as in the case of the asphalt base products. For other than skin treatments, multiple applications and some scarifying and blading may be necessary.

792.3 MEASUREMENT:

The Engineer shall order the rate of application of all materials. This is a contingent item and quantities may be increased or decreased as required or eliminated entirely from the contract.

Asphalt base types shall be measured by the ton completed and accepted in place.

Petroleum resinous types shall be measured by the diluted gallons completed and accepted in place.

Lignin based types shall be measured by the pounds of residual solids applied, completed and accepted in place.

Sand for blotting shall be measured by the ton.

792.4 PAYMENT:

Payment will be made for the above items bid in the proposal form for the applicable items and shall constitute full payment for furnishing all materials, equipment, tools, labor, and incidentals necessary to complete the work.

Payment for all asphalt base items shall be by the ton.

Payment for all petroleum resinous types shall be by the diluted gallon at 60°F.

Payment for lignin based types shall be by the pound of solid content of lignin sulfonate and included wood sugars.

Payment for sand for blotting shall be by the ton.

End of Section

SECTION 795

LANDSCAPE MATERIAL

795.1 GENERAL:

Material used for landscaping purposes shall be in conformance with this Section.

The common and scientific names of plants shall conform to the approved names in Standard Plants Names (SPN) or its successor, American Association of Nurserymen (ASN). For identification and inspection, durable, legible labels, bearing the plant's name in water-resistant ink, shall be attached to all nursery stock or container of stock delivered to the project site.

795.2 TOPSOIL:

Topsoil shall be a fertile, friable soil, obtained from well-drained arable land, and shall be free from nut grass, refuse, roots, heavy clay, clods, noxious weeds or any other material toxic to plant growth. At least 10 days prior to delivery of topsoil to the site, the Contractor shall furnish the Engineer at no additional cost, with a soil sample from each source for analysis and tests.

To be acceptable the pH factor shall not exceed 8.0 or be lower than 5.5, soluble salts shall not exceed 1500 PPM, the plasticity index shall be in the range of 3 and 15 inclusive, and it shall contain approximately 1½%, by dry weight, or organic matter either natural or added. Gradation shall be in accordance with the following:

Sieve Size	Percent Passing
1"	100
½"	95-100
No. 4	90-100
No. 10	70-100
No. 200	15-70

795.3 SOIL FERTILIZING MATERIAL:

Fertilizing material shall comply with the applicable requirements of the State Agricultural Code. All fertilizing material shall be packaged, first grade, commercial quality products identified as to source, type of material, weight and manufacturer's guarantee analysis. It shall not contain toxic ingredients or fillers in quantities harmful to human life, animals or plants. It shall be delivered in unopened containers and shall have the chemical analysis as specified in the plans or specifications. Material which has become caked or otherwise damaged shall not be used.

795.4 ORGANIC SOIL CONDITIONERS:

In general, soil conditioners shall consist of a ground or processed wood product derived from redwood, ground or shredded fir, redwood or ponderosa bark. It shall have a nitrogen content of 1%, a pH not exceeding 7.5, and organic matter not less than 85%. Its gradation shall be such that at least 85% passes the ¼-inch screen. In addition, it shall be treated with a non-toxic agent so as to be hygroscopic.

When manure is used as a soil conditioner, it shall be the product of yard fed cattle, free of weed seeds, straw or any other inert material and aged at least 3 months. This manure shall have been processed by grinding and screening and shall be of a consistency that will readily spread with a mechanical spreader.

795.5 CHEMICAL SOIL CONDITIONER:

Chemical soil conditioners such as soil sulfur, gypsum or iron additive shall be commercially approved brands designated for agricultural use. Material which has become caked or otherwise damaged shall not be used.

795.6 SEEDS:

Seeds shall be fresh, clean seeds, pre-mixed to the specified proportion. They shall be delivered to the site in original, unopened containers bearing the dealer's guaranteed analysis and germination percentage. They shall have a certificate or a stamp or a release accomplished by an agricultural commission.

795.7 PLANTS, TREES, AND SHRUBS:

795.7.1 General: All landscape stock shall be grown in nurseries approved by the State Department of Agriculture. They shall have a growth habit normal to the specie. Stock shall be sound, healthy, and vigorous; free from insect pests, sun scald, excessive bark abrasions and other objectionable disfigurements. They shall have normal, well-developed branch systems and vigorous, fibrous root systems which are neither root nor pot-bound and are free of kinkled or girdling roots.

All stock shall have been grown in pots, cans, tubs, or boxes for a minimum of three months and a maximum of one year. They shall have sufficient roots to hold earth together after removal from the containers. This earth shall be free from noxious weeds including bermuda grass.

Stock shall be inspected and approved by the Engineer at the Contractor's storage site prior to delivery to the project.

795.7.2 Flatted Plants: Flatted plants shall be grown and remain in the flats until transported to the project site. The soil and spacing of the plants in the flats shall insure the minimum disturbance of the root system at transplanting.

795.7.3 Trees: Trees shall be of the specified height, spread and caliper and shall stand erect without support. The height shall be measured from the root crown to the last division of the terminal leader with the branches in a normal position and the caliper shall be measured 12 inches above the crown roots. For palm trees only, the height shall be measured from the ground line to the base of the growing bud.

795.7.4 Shrubs: Shrubs shall be of the specified type, height and spread. They shall be selected from high quality, well-shaped nursery stock.

795.8 MISCELLANEOUS MATERIAL:

795.8.1 Headers and Stakes: Lumber for landscaping shall be construction heart, rough-sawn redwood in the sizes specified; splicing will not be permitted. Stake used with header boards shall be 2 x 4 inches, pointed and at least 18 inches long.

795.8.2 Tree Stakes: Unless otherwise specified, tree stakes shall be 2 x 2 inch redwood posts, free of knots and reasonably straight, and of sufficient length to properly support the tree.

795.8.3 Tie Wires: Tie wire shall be No. 12 AWG zinc coated wire and the cover for this wire shall be ½ inch garden hose.

795.8.4 Decomposed Granite: Decomposed granite shall be as per Subsection 702.4 with the following exceptions. All material used for a specific project or location shall be from a single source and shall present a uniform appearance. The gradation shall be as shown below. If a specific color or type is required, it will be so indicated in the Contracting Agency's specifications.

Sieve Size	Percent Passing
¾ inch	100%
½ inch	60-70
No. 40	5-20

End of Section

INDEX

A

Abbreviations 101-1
ABS Truss Pipe and Fittings 744-1
Acceptance of Work
  final 105-6
  partial 105-5
Access to Property 107-4, 401-1
Actual Cost of Work 109-3
Addendum 101-6
Adjusting
  covers 345-1
  frames 345-1
  public and private utilities 105-2
  valve boxes 345-1
  water meter boxes 345-1
Affidavit, Contractor's ..... xiii, 109-5
Aggregate Base 101-1, 702-1
Aggregate for
  asphalt chip seal 330-1, 716-1
  asphalt concrete overlay 322-1
  bituminous treated base course 313-1
  chips 716-1
  fog seal 333-1
  hot asphalt-rubber seal 335-1
  portland cement concrete 324-1, 705-1, 725-1
  portland cement treated base 705-1
  precoated chips 716-2
  riprap 703-1
  road-mixed surfacing 320-1
  sand blotter 333-2
  slurry seal 332-1, 715-1
  soil cement base course 311-1, 725-1
  subdrainage 605-1
  trench bedding of pipe 601-6, 603-1, 615-1
  uncoated chips 716-2
Aggregate Paving
  exposed 343-1
Aggregate, Mineral 715-1
Air Release Valves 630-7
Air Test, Sewer Lines 615-2
Alley Entrances 104-2, 340-1
Aluminum Handrail 520-1
Anti-Stripping Agent 710-2
Approval of
  contract, bonds and insurance 103-1, 103-2
  materials 106-1
  proposal 102-1, 103-1
  shop drawings 105-1
  subcontracts 108-1
  substitutes 106-2
Archaeological Reports 107-2
Asbestos-Cement Pipe & Fittings for Storm Drain / Sanitary Sewer 737-1
Asbestos-Cement Water Pipe and Fittings 752-1
Asphalt
  concrete 718-1, 719-1
  emulsified 713-1
  liquid 712-1
  preservative seal for 718-1
  rubber 717-1

Asphalt Chip Seal 330-1
Asphalt Concrete
preservative seal for 334-1
Asphalt Concrete Hot Mixed, Recycled 719-1
Asphalt Concrete Overlay 322-1
Asphalt Concrete Pavement 710-1
corrective requirements of deficiencies 321-5
curbs 321-7
placing, spreading and finishing 321-1
tack coat 321-1
weather and moisture conditions 321-1
Asphalt Distributing Equipment 330-3
Asphalt Emulsion
slurry seal coat 332-1
Asphalt Pavement, Reclaimed 709-1
Assignment of
contract 108-1
payments 109-1
Authority of the
engineer 105-1
inspector 105-4
Authorized Signature Form xv
Award
and execution 103-1
cancellation of 103-1
of contact 103-1

B

Backfill, Structure 206-1
Barricades and Warning Signs 107-3
Base Materials
crushed aggregate 702-1
decomposed granite 702-2
processed natural material 702-2
Beginning Work 108-1
Bench Marks 105-4
Bid Guarantee
amount 102-2
forfeiture of 103-3
return of 103-1
Bidder
disqualification of 102-3
eligibility and preference 102-1
successful 102-3
Bidding Requirements and Conditions 102-1
Bituminous Prime Coat 315-1
Bituminous Treated Base Course 313-1
Blasting
discontinue 107-4
operations 107-4
Bolts 770-1
Bolts, Anchor 770-1
Bonds
acceptable to 103-1
amount 103-2
executed by 103-3
forms ..... iv, ix, x
payment, labor and material 103-1
performance, contract 103-2
proposal guarantee 102-2
requirement of 103-1
surety, improvement district iv

Borrow Excavation
local and imported 210-1
placing and compacting 210-1
Brick
building, facing and manhole 775-1
concrete paving 342-1
decorative pavement 342-1
Brick Masonry
bricklaying 511-1
curing, grouting and reinforcing 511-2
Bridges
concrete 505-1
steel 515-1
Bronze
castings 786-1

C

Cable
installation 360-1
Cancellation of
award 103-1
contract 108-5
insurance xii
Cast Iron Pipe 750-2
Cast-In-Place Concrete Pipe
construction 620-1
materials 620-1
tests 620-3
Castings
bronze 786-1
gray iron 787-1
steel 785-1
Catch Basins 505-1
Cement Concrete
admixtures 725-3
aggregate 725-2
cement 725-1
classes of concrete 725-1
mixing 725-4
testing 725-6
water 725-3
Cement Mortar and Grout 776-1
Cement Treated Base
construction 312-1
curing 312-3
inverted section 312-3
mixing 312-2
Certificate of
compliance and analysis 106-1
insurance 103-2
insurance form xi
weighmaster's 109-1
Chain Link Fences 420-1, 772-2

Change Order
- additional time ... 108-3
- alteration of work ... 104-2, 109-2
- extra work ... 104-2, 109-2
- payment ... 104-2
- unforseen circumstances ... 109-2

Channels, Open ... 215-1
Chip Seal Coat
- application of asphalt and aggregate ... 330-1
- materials ... 330-1
- weather conditions ... 330-1

Chlorine
- disinfecting water mains ... 611-1

City Sealer of Weights ... 109-1
Classes, Grades and Types
- cement mortar ... 775-2
- concrete ... 725-1
- emulsified asphalt ... 713-1
- liquid asphalt ... 712-1
- pavements ... 710-1
- paving asphalts ... 711-1
- slurry seal ... 332-1

Clay Pipe Vitrified ... 743-1
Clean Up
- during construction ... 104-1
- final ... 104-2

Clearing and Grubbing ... 201-1
Coating Corrugated Metal Pipe & Arches ... 760-1
Collusion, Evidence of ... 102-3, 108-5
Commencement, Prosecution and Progress ... 108-1
Compensation for
- alternation of work ... 109-2
- change order ... 104-2
- extra work ... 109-2

Concrete
- alley entrance ... 340-1
- asphalt ... 710-1
- block ... 775-1
- curb ... 340-1
- curing materials ... 726-1
- driveway ... 340-1
- gutter ... 340-1
- non-reinforced pipe ... 736-1
- paving stone or brick ... 342-1
- piles ... 782-1
- portland cement ... 725-1
- pressure pipe ... 758-1
- sidewalk ... 340-1

Concrete Pipe
- cast-in-place ... 620-1
- lining ... 741-1
- non-reinforced ... 736-1
- reinforced ... 735-1

Concrete Block Masonry
- construction ... 510-1
- curing ... 510-2
- reinforcing ... 510-1
- testing ... 776-2

Concrete Classes ... 725-1

Concrete Curing Materials 726-1
Concrete Structures
concrete deposited under water 505-7
curing 505-7
falsework 505-3
finishing concrete 505-8
forms 505-1
placing reinforcement 505-4
placing concrete 505-4
subgrade 505-1
Conformity with Plans and Specifications 105-1
Construction
cleanup and dust control 104-1, 225-1
fill 211-1
maintenance during 105-5
manhole 625-1
reclaimed water line 616-1
riprap 220-1
schedule, contractor's 108-1
stakes, lines and grades 105-4
storm drain 618-1
Contract
approval 103-3
assignment 108-1
award and execution of 103-1
award of 103-1
bond form ..... i, iv, v, ix, x
bonds, requirement of 103-1
execution 103-3
failure to complete 108-4
failure to execute 103-1
final acceptance 105-5
final payment 109-5
forms ..... i, iv, v, ix, x
insurance 103-2
partial acceptance 105-5
partial payment 109-5
requirements, labor 107-1, 107-2
subletting of 108-1
surety bond, improvement district iii
terminations 108-5
time extensions 108-3
time of completion 108-1
Contractor's
accident prevention requirements 107-2, 107-3
affidavit, settlement of claims xiii
construction schedule 108-1
correspondence to 108-1
default 108-4
eligibility and preference 102-1
examine site prior to bidding 102-1
insurance certificate xi
liability of 107-1
Marshaling Yard 107-2
notice to 108-1
notify public utilities 105-2, 107-5
personnel and equipment 108-2
requested changes 104-2
responsibilities 107-5
superintendent 105-2, 105-4

Control of
materials ... 106-1
work ... 105-1
Controlled Low Strength Material ... 728-1
mixing ... 728-1
payment ... 604-2
placement of ... 604-1
Cooperation
between contractors ... 105-3
of contractor ... 105-2
with utilities ... 105-2
Coordination of Plans and Specifications ... 105-2
Copper Pipe, Tubing and Fittings ... 754-1
Corrugated Metal Pipe and Arches
coating ... 760-1
installation ... 621-1
test specimens ... 621-2
Cover Material for Chip Seal ... 716-1
Crushed Aggregate ... 702-1
Crushed Rock and Gravel ... 701-1
Curbs
asphalt ... 321-7
concrete ... 340-1
safety ... 410-1
Curing
cast-in-place concrete pipe ... 620-3
concrete block masonry ... 511-1
concrete curb, gutters and sidewalks ... 340-2
concrete structures ... 505-7
gunite ... 525-2
materials ... 726-1
precast prestressed concrete members ... 506-1
terrazzo sidewalks ... 341-2

D

Damages, Liquidated ... 108-4
Decomposed Granite ... 430-2, 702-2
Decreased Quantities ... 109-2
Definitions ... 101-1
Definitions and Terms ... 101-6
Delays
asbestos ... 107-2
between contractors ... 105-3
beyond control of contractor ... 108-3
contracting agency ... 109-6
extension of time ... 108-3, 109-6
in payment ... 109-6
payment for ... 109-6
utility owners ... 105-3
Discontinue Blasting ... 107-4
Discrimination Clause ... 107-1
Disinfecting Water Mains
final flushing, sampling and testing ... 611-1, 611-3
methods of applying chlorine ... 611-2
rate of application ... 611-3
Disposal of Surplus Material ... 205-2
Disqualification of Bidders ... 102-3
Drainage and Irrigation Structures ... 505-1

Drawings, Shop 105-1
Driveway 340-1
Driveways
access 107-4, 340-1, 401-1
Driving Piles
bearing value 501-2
cutoff and extension 501-3
description 501-1
equipment 501-1
testing 501-4
Drop Sewer Connections 625-1
Ductile Iron Pipe 750-2
Dust Control 104-1, 225-1
Dust Palliative 792-1
Duties of Inspector 105-4

E

Earthwork 201-1
for open channels 215-1
Earthwork for Open Channels
Excavation 215-1
fill and backfill 215-2
grading 215-2
stripping 215-1
Easements 107-5
Eligibility of Contractor 102-1
Emergency
contractor's representative 104-1, 105-2
defects 108-3
services for public 104-1
Emulsified Asphalt
grades 713-1
test reports and certification 713-1
Encasement of
sewer pipe 602-1
water pipe 602-1
Engineer
authority of 105-1
decisions 105-1
suspension of work 104-1, 105-1, 108-2, 108-3
Equipment
approval of 106-1
asphalt distributors 330-3
joint heater 321-4
rental rates 109-3
storage of 106-2
watering 225-1
Examination of
plans 102-1
site of work 102-1
special provisions 102-1
Excavation
borrow 210-1
roadway 205-1
structure 206-1
Excavation, Borrow Roadway, Structure, Trenches 601-1
Execution of Contract 103-3
Exfiltration Test, Sewer Lines 615-2

Existing Improvements
removal of ... 350-2
Expansion Joint Filler
application ... 729-2
pour type ... 729-1
premolded ... 729-1
test report and certification ... 729-2
Explosives
discontinue use of ... 107-4
use of ... 107-3
Exposed Aggregate Paving ... 343-1
Extension of Time ... 108-3
Extra Work
actual cost ... 109-3
claims for ... 104-2
force account ... 109-3
method of ordering ... 109-2
method of payment ... 109-2
Extruded
alley entrance ... 340-1
asphalt curbs ... 109-3
concrete curb ... 340-1
driveway ... 340-1
gutter ... 340-1
sidewalk ... 340-1

F

Failure to
complete on time ... 108-4
execute contract ... 103-3, 108-4
maintain construction, roadway or structure ... 105-5
Federal Aid Project ... 107-1
Fence
chain link ... 772-2
Fill Construction ... 211-1
compacting ... 211-1
placing ... 211-1
tests ... 211-2
Final
acceptance, final or partial ... 105-5
cleaning up ... 104-2
estimate ... 109-4
inspection ... 105-6
payment ... 109-5
Fire Hydrants
installation ... 610-4, 756-1
Flagman or Pilot Cars ... 401-1
Flexible Metal Guardrail ... 415-1
Fog Seal Coats
application ... 333-1
materials ... 333-1
test reports and certificates ... 333-1
weather conditions ... 333-1
Force Account Work ... 109-3
Forfeiture of
contract ... 108-4
proposal guarantees ... 103-3
Foundation Data, Test Holes ... 102-1, 601-6
Foundation Material Treatment ... 206-1
Furnished Materials ... 106-3

G

Galvanized Pipe and Fittings 753-1
Galvanizing 771-1
Gaskets
  for concrete pipe 765-1
Grading
  parkway 424-1
  under pavements 301-1
Granular Material 601-6
Gravel Crushed 701-1
Gray Iron
  castings 787-1
Ground Water, Logs 102-1, 601-6
Grout 776-1
Grubbing and Clearing 201-1
Guarantee
  bid 102-2
  forfeiture of 103-3
  proposal 102-2
  provisions 108-3
  return of 103-1
  workmanship or materials 108-3
Guardrail 415-1
Gutter 340-1

H

Hand Mixed Concrete 725-6
Handrails
  aluminum 520-1
  steel 520-1
Health, Safety and Sanitation 107-2
Heater Remix Resurfacing
  asphalt rejuvenating agent 323-2
  equipment 323-2
  heating and remixing 323-2
  weather conditions 323-2
Holes, Test 102-1, 601-6
Hot Asphalt-Rubber Seal
  equipment 335-1
  mixing 335-1
  spreading 335-2
  temperatures 335-2
Hot In-Place Recycling 327-1
Hydrants, Fire
  installation 610-4
  types 756-1
  working around 107-5

I

Increased Quantities 109-2
Inspection
- by others 105-4
- final 105-6
- of materials 106-1
- of plant 106-1
- of trees and shrubs 430-2
- of work 105-4
- section to be notified 108-1

Inspector
- authority of 105-4
- duties of 105-4

Installation of
- cable 360-1
- high density polyethylene pipe 603-1
- sprinkler irrigation system 440-1
- telecommunications 360-1

Insurance
- approval of 103-2
- cancellation of xii
- certificate of x
- contractor's 103-2
- damage claims x
- fire and extended coverage 103-2
- occupational disease 103-2
- property damage 103-2
- public liability 103-2
- renewal certificate xii
- types of 103-2
- workman's compensation 103-2

Iron Water Pipe and Fittings
- cast iron 750-2
- ductile iron 750-2

Irregular Proposals 102-2
Irrigation Structures 505-1

J

Jacked Steel Casing 602-1
Jetting
- for settling trench backfill 601-5

Joint Filler 729-1
Joints
- asbestos cement pipe 737-1
- asphalt concrete pavement 321-4
- cast-in-place concrete pipe, stoppage 620-2
- concrete curb, gutter and sidewalks 340-2
- concrete structures 505-5
- corrugated metal pipe 621-1
- gunite 525-2
- high density polyethylene pipe 738-1
- iron water pipe 750-2
- mortar, brick 511-1
- mortar, concrete block 510-1

non-reinforced concrete pipe 736-1
pneumatically placed mortar 525-3
reinforced concrete pipe 735-1
rubber gaskets 765-1
sewer lines 615-2
subdrainage systems 605-1
vitrified clay pipe 615-2
water lines 610-5

L

Labor and Materials
payment bond ..... x, 103-2
payment bond form x
Labor Requirements 107-1, 108-2
Laboratory Tests 106-1
Landscape and Property Protection and Restoration 107-4
Landscaping
and planting 430-1
materials 795-1
Laws
contractor's responsibility to observe 107-1
Legal Regulations and Responsibility to Public 107-1
Legal Rights, No Waiver of 107-5
Lime Slurry Stabilization 309-1
composition 309-1
construction 309-2
materials 309-1
measurement 309-4
payment 309-4
Limitation of Operations 108-2
Lining for Reinforced Concrete
installation 741-1
sanitary sewer pipe 741-1
testing and repairing 741-3
Liquid Asphalt 712-1
Liquidated Damages 108-4
Location of Underground Utilities
expose all underground utilities 107-5
notify prior to blasting 107-3
notify utility companies 105-2, 107-1
protection thereof 107-5
that differ from those shown 105-3
Lumber 778-1

M

Maintenance
during construction 105-5
of traffic 104-1
unsatisfactory 104-1, 107-2, 401-1
Manhole Construction 625-1
Marshaling Yard 107-2
Marshall Mix Design 710-4
Masonry Mortar and Grout 776-1

Materials
approval 106-1
control of 106-1
equal 106-2
furnished 106-1
handling 106-2
landscape 795-1
new and unused 106-1
patented 106-2
payment of 109-5
quality 106-1
reasonably acceptable 105-2
rejection 105-5, 106-1
samples and tests 106-1
source of 106-1
storage of 106-2
substitutions 106-2
unacceptable 106-3
Measurement of Quantities and Payment 109-1
Meter Service Connections, Water 631-1
Methods and Equipment 108-2
Mill Reports
handrails, steel and aluminum 520-1
reinforcing steel 727-1
structural steel 515-1
Mineral
aggregate 715-1
filler 715-1
Mineral Admixture 710-2
Mineral Filler 710-2
Monthly Payments 109-5
Monuments
construction 405-1
protection of 107-4

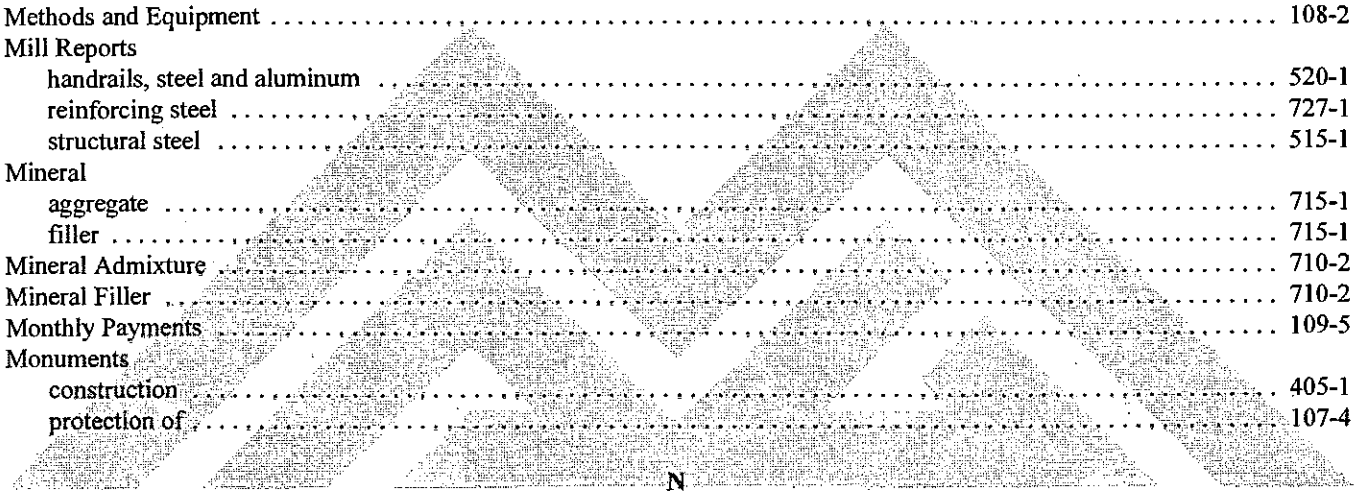

N

Name Stamped in Concrete 340-2
Noise 107-3
Non-Discrimination Statute 107-1
Non-Reinforced Concrete Pipe
joints 736-1
materials 736-1
test 736-2
Notice
of award 103-1
to contractor 108-1
to engineer 104-2, 105-2
to proceed 108-1
Notify
inspection section 108-1
survey section 105-4, 108-1

O

Occupational Disease Insurance 107-2
Occupational Safety and Health Act 107-2
Officials, Public
  personal liability of ..... x, 107-5
Open Channels, Earthwork 215-1
Open Trench 601-3
Opening Sections to Traffic 104-1, 108-1
Or Equal, Substitutions 106-2
Overtime
  contractor 105-2, 108-2
  inspection 108-3

P

Paint 790-1
Painting
  application 530-1
  surface preparation 530-2
  testing 530-4
  weather conditions 530-1
Parkway Grading 424-1
Partial Payments 107-4, 109-5
Partial Use or Occupancy 105-5
Patented Devices, Materials and Processes 107-2
Pavements
  asphalt chip seal 330-1
  asphalt concrete 321-1
  asphalt concrete overlay 322-1
  asphalt emulsion slurry seal coat 332-1
  chip seal coat "chips" 330-1, 716-1
  decorative 342-1
  drainage 321-5
  exposed aggregate 343-1
  fog seal coats 333-1
  hot asphalt-rubber seal 335-1
  matching and surface replacement 336-1
  precoated chip seal 335-2, 716-2
  preservative seal 334-1
  reclaimed asphalt 709-1
  replacement for cuts 336-1
  slurry seal coat 332-1
  tack coat 329-1
  termination 321-2
Paving Asphalts
  temperatures 711-2
  test reports and certification 711-2
  viscosity grades 711-1
Payments
  actual cost work 109-3
  assignment 109-1
  extra cost work 109-2
  final payment 109-5
  partial payment 109-5
  projects 109-4
  scope of 109-1
  stored materials 109-5
  withheld 109-6

Pedestrian Crossing-Trenches 601-3
Permanent Pavement Replacement 336-2
Permits 107-1
Personal Liability of Public Officials ..... xi, 107-1, 107-5
Piles
  concrete 782-1
  driving 501-2
  steel 781-1
  timber 780-1
Pilot Cars or Flagman 401-1
Pins 770-1
Pipe
  cast-in-place bedding 620-2
  cast-in-place curing and backfill 620-3
  cast-in-place trench widths 620-1
Pipe Installation for
  sewer lines 615-1
  sprinkler irrigation system 440-1
  storm sewers 618-1
  subdrainage 605-1
  water lines 610-1
Plans
  bidder's copies 102-2
  conformity with 105-1
  contractor's copies 105-2
  coordination of 105-2
  examination of 102-1
  govern 102-1
  shop drawings 105-1
Planting
  and landscaping 430-1
Pneumatically Placed Mortar (gunite)
  composition 525-1
  curing 525-2
  finishing 525-2
  materials 525-1
  placing 525-2
  tests 525-2
Polyethylene Pipe 755-1
  high density 603-1, 738-1
  installation of 603-1
Portland Cement Concrete
  admixtures 725-3
  aggregate 725-2
  cement 725-1
  classes 725-1
  loading and transportation 725-6
  proportioning 725-3
  street pavement 324-1
  tests 725-6
  water 725-3
Portland Cement Treated Base 705-1
Power of Attorney 103-2

Precast Prestressed Concrete Members
anchorages and distribution ... 506-3
bonding and grouting ... 506-5
concrete ... 506-1
enclosures ... 506-3
handling ... 506-6
prestressing ... 506-4
prestressing steel ... 506-2
samples for tests ... 506-5
Precast Safety Curbs ... 410-1
Precoated Chip Seal
asphalt grade ... 330-1
construction methods ... 330-1
temperatures ... 330-1, 330-2
Precoated Chips ... 330-1, 716-2
Preservative Seal ... 334-1, 718-1
Preservative Seal for Asphalt Concrete ... 334-1, 718-1
Preservatives
wood ... 779-1
Prime Coat ... 315-1
Processed Natural Material ... 702-2
Progress, Commencement and Prosecution ... 108-1
Property and Landscape Protection and Restoration ... 107-4
Property Marks and Monuments ... 107-4
Proposal
addenda ... 102-2
consideration of ... 103-1
forms ... i, iii
irregular ... 102-2
more than one ... 102-3
opening ... 102-3
preparation ... 102-2
rejected ... 102-2
revision ... 102-3
submission of ... 102-3
withdrawal of ... 102-3
Proposal Guarantee
amount ... 102-2
forfeiture of ... 102-2, 103-3
return of ... 103-1
Public
convenience ... 107-2
property ... 107-3
safety ... 107-2
Public Officials
personal liability of ... 107-1, 108-1
PVC Sewer Pipe and Fittings ... 745-1

Q

Quantities
in proposal ... 102-1
increase or decrease ... 109-2
measurement of ... 109-1
payment ... 109-1
Quarry Stone ... 701-2

R

Ready-Mix Concrete 725-4
Reclaimed Asphalt Pavement 709-1
Reclaimed Water Line
  construction 616-1
Recycling
  hot in-place 327-1
Reinforced Concrete Pipe
  curing 735-2
  general 735-1
  manufacturer's qualifications 735-2
  materials 735-1
  tests and acceptance 735-2
Reinforcing Steel 727-1
Rejected Materials 106-2
Removal of
  defective materials 105-5
  existing improvements 350-2
  salvage items 201-2
  unacceptable work 105-5
  unauthorized work 105-5
Rental Equipment 109-4
Reports
  archaeological 107-2
  blasting survey 107-3
  extra work 104-2
  final payments 109-5
  partial payments 109-5
  site conditions 109-2
Responsibility, Contractor's 107-4
Retaining Walls 505-1
Revision of Proposal 102-3
Right-of-Way
  and traffic control 401-1
  furnishing 107-5
  monuments 405-1
  storage of materials 106-2
Riprap
  concrete 703-1
  construction 220-1
  sacks 703-1
  stone 703-1
Riprap Construction
  grouted 220-1
  materials 703-1
  plain 220-1
  preparation of ground surfaces 220-1
  rivets 770-1
  sacked concrete 220-1
Rivets 770-1
Road Closures 107-3, 401-1
Road-Mixed Surfacing 320-1
  application of liquid asphalt 320-1
  materials 320-1
  mixing 320-1
  spreading aggregate 320-1
  spreading and compaction 320-2

Roadway Excavation 205-1
overshooting 205-1
slides and slipouts 205-1
slopes 205-1
surplus material 205-2
unsuitable material 205-1
Roadway, Failure to Maintain 105-5
Rock, Gravel, and Sand 701-1
Rolling, Pavements
asphalt concrete 321-4
chip seal 330-3
hot asphalt-rubber 335-2
permanent 336-2
precoated chip 329-1
slurry seal 332-3
temporary 336-2
Rubber
asphalt 717-1
Rubber Gaskets 765-1

S

Safety
and public convenience 104-1, 107-2
curbs 410-1
for workman 105-1, 107-2
health and sanitation 107-2
of employees 107-2
of public 104-1, 105-1, 107-2
OSHA 107-2
Samples and Tests of Materials 106-1
Sand 321-7, 324-1, 342-1, 701-1
Sanitary Conditions 107-2
Sanitary Sewer
fittings for 738-1
Saw Cut
pavement 336-1, 601-2
portland cement concrete 324-6
Schedule, Construction 108-1
Scope of Work 104-1
Seal Coats
chip 330-1
fog 333-1
hot asphalt-rubber 335-1
precoated 329-1
preservative 334-1
slurry 332-1
tack coat 329-1
Sewer Line Construction
air test 615-2
exfiltration test 615-4
jointing 615-2
laying pipe 615-1
materials 615-1
service taps 615-2
trenching 615-1
Sewer Manholes 625-1
Sewer Pipe
fittings for 745-1

Shop Drawings
approved by ... 105-1
cost of ... 105-1
furnished by ... 105-1
Sidewalk ... 340-1
Sidewalks
terrazzo ... 341-1
Signs
barricades and warning ... 107-3
blasting operations ... 107-3
Site of Work
clean up ... 104-1
examination ... 102-1
Slurry Seal ... 332-1
materials ... 715-1
Slurry Seal Coat
construction methods ... 332-1
equipment ... 332-1
job mix ... 332-1
Soil Cement Base Course ... 311-1
Source of Materials and Quality ... 106-1
Specifications
conformity with ... 105-1
coordination with ... 105-2
examination ... 102-1
Sprinkler
irrigation system ... 757-1
irrigation system installation ... 440-1
Stakes, Construction ... 105-4
State inspector of weights ... 109-1
Steel
castings ... 785-1
piles ... 781-1
Steel and Aluminum Handrails ... 520-1
Steel Plates for Street Crossings ... 601-3
Steel Reinforcement ... 727-1
Steel Structures
buildings ... 515-1
computed weights ... 515-2
description ... 515-1
painting ... 515-2
workmanship ... 515-2
Stone
concrete paving ... 342-1
Storage of
equipment ... 106-2
explosive ... 107-3
materials ... 106-2
paid materials ... 109-4
Storm Drain ... 618-1
fittings for ... 738-1
Streets and Related Work ... 301-1
Structural and Rivet Steel ... 770-1
Structural Plate Pipes and Arches ... 761-1
Structure Excavation and Backfill ... 206-1
foundation material treatment ... 206-1
inspection ... 206-1
structure backfill ... 206-1
Structure, Failure to Maintain ... 105-5

Structures
concrete ... 505-1
steel ... 515-1
Subcontractor's
eligibility and preference ... 102-1
employment of labor ... 108-2
insurance ... 103-2
list of, when required ... 102-2
personnel ... 108-2
Subcontracts
approval of ... 108-1
discrimination clause ... 107-5
in accordance with ... 108-1
liability ... 108-1
Subdrainage
filter material ... 605-1
pipe ... 605-1
placement ... 605-2
tests ... 605-2
Subgrade
base materials ... 702-1
bituminous treated ... 313-1
cement treated ... 312-1
curbs, gutters, driveways, sidewalks ... 340-1
preparation ... 301-1
soil-cement ... 311-1
Subsurface Data ... 104-2
Superpave Mix Design ... 710-4
Surety, Power of Attorney ... 103-1
Survey
monuments ... 405-1
section to be notified ... 105-3, 108-1
Suspend the Work ... 104-1, 104-3, 108-2, 108-3, 109-4

T

Tack Coat ... 329-1
Tapping Sleeves and Valves ... 630-1
air release and vacuum valves ... 630-7
butterfly valves ... 630-5
gate valves ... 630-1
Telecommunications
installation ... 360-1
Temperature
portland cement concrete ... 725-4
Temperatures
asphalt concrete ... 711-2
emulsified asphalts ... 330-2, 713-3
expansion joint filler ... 729-1
heater remix resurfacing ... 323-2
hot asphalt-rubber seal ... 335-1
liquid asphalts ... 330-2, 712-1
non-reinforced concrete pipe ... 736-1
portland cement concrete ... 725-4
precoated chip seal ... 330-1, 330-2
prestressed concrete members ... 506-2
Temporary Pavement Replacement ... 336-2, 601-6
Termination of Contract ... 108-5
Terrazzo Sidewalks ... 341-1

Test
award of contract ... 103-1
bidding ... 102-3
contract ... 108-3
execution of contract ... 103-3
extension of ... 108-3
failure to complete on ... 108-4
holes ... 102-1, 601-6
laboratory ... 106-1
procedures and methods ... 106-1
right to retest ... 106-1
samples of materials ... 106-1
Testing
asbestos-cement pipe ... 737-1, 752-1
asphalt concrete pavements ... 321-5
base materials ... 702-2
bronze castings ... 785-1
cast-in-place concrete pipe ... 620-3
concrete ... 725-6
curbs ... 340-2, 725-6
emulsified asphalts ... 713-1
galvanized materials ... 771-1
gray iron castings ... 787-1
gunite ... 525-2
gutters ... 340-2
lining for concrete pipe ... 741-3
liquid asphalts ... 712-1
mortar ... 776-2
non-reinforced concrete pipe ... 737-1
paint ... 530-4
paving asphalts ... 711-1
piles ... 501-4
polyethylene pipe ... 755-1
preservative seal ... 718-1
reinforced concrete pipe ... 735-2
rock, gravel and sand ... 701-2
rubber gaskets ... 765-1
sewer lines ... 615-2
sidewalks ... 340-2
sprinkler irrigation system ... 440-4
steel castings ... 785-1
structural and rivet steel ... 770-1
subdrainage systems ... 605-2
water lines ... 610-7
Timber
piles ... 780-1
Topsoil ... 425-1, 795-1
Trade Names and Substitution ... 106-2
Traffic
barricade manual ... 107-3, 108-2, 401-1
control ... 401-1
control devices ... 401-1
maintenance of ... 104-1
Tree and Shrub Planting ... 430-2
Trench Excavation, Backfilling and Compaction ... 601-1
backfill and compaction ... 601-4
cutting pavements ... 601-2
density required ... 601-5
excavation ... 601-1

open trench 601-3
pavement replacement 601-6
protection of improvements 601-3
trench widths 601-1
Truss Pipe
fittings for 744-1
Tunneled Steel Liner Plate 602-1
Tunneling Operation 602-1
Types of Pavement Replacement 336-1

U

Unacceptable
materials 106-3
work 105-5
Uniformed Off-Duty Law Enforcement Officer 401-2
Untreated Base 310-1
Use or Occupy 105-5
Utilities
cooperation with 105-2
moved by the owners 105-2
notify before blasting 107-3
protection of 107-5

V

Valves
air release and vacuum 630-7
butterfly 630-5
gate 630-1
sprinkler irrigation 440-3
Vitrified Clay Pipe 743-1

W

Wage Rates 107-1
Waiver of Legal Rights 107-5
Warranties 108-3
Water and Sewer 600-1
Water Line
construction 616-1
Water Line Construction
blocking 610-6
construction methods 610-1
couplings, joints, gaskets, flanges 610-5
disinfecting 610-8
fire hydrants 610-4
manholes and vaults 610-4
materials 610-1
meter service connections 610-4
polyethylene corrosion protection 610-2
testing 610-7
valves 610-3
Water Settlement 601-5
Water Taps and Meter Service Connections 631-1
Watering 225-1

Weather for
asphalt concrete pavement 321-1
chip seal coat 330-1
concrete structures 505-6
fog seal coat 333-1
heater remix resurfacing 323-2
hot asphalt-rubber seal 335-1
painting 530-1
slurry seal coat 332-2
Weighmaster's Certificates 109-1
Wire Reinforcement 727-1
Withholding Assignments 109-1
Wood
piles 780-1
preservatives 779-1
Work
acceptance 105-5
actual cost work 109-3
alteration of 104-2
compensation for alteration 109-2
contractor's responsibility 107-4
control of 105-1
extra 104-2, 109-2
force account 109-2
hours 108-1
inspection of 105-4
overtime 105-2, 108-2
rejected 105-4
scope of 104-1
suspension of 105-1, 105-4, 107-4
to be done 104-1
unacceptable 105-5
unauthorized 105-5
weekend or holiday 108-2, 108-3
Workmen
character of 108-2
compensation insurance 103-3
safety 105-1, 107-2

UNIFORM STANDARD DETAILS for PUBLIC WORKS CONSTRUCTION

SPONSORED and DISTRIBUTED by the

1998

ARIZONA

(Includes Revisions Through 1998)

1. THESE DETAILS HAVE BEEN PREPARED IN AN EFFORT TO STANDARDIZE THE CONSTRUCTION DETAILS USED BY VARIOUS CONTRACTING AGENCIES IN MARICOPA COUNTY. THEY ARE TO BE USED IN CONJUNCTION WITH THE CURRENT EDITION OF THE "UNIFORM STANDARD SPECIFICATIONS FOR PUBLIC WORKS CONSTRUCTION" SPONSORED AND DISTRIBUTED BY THE MARICOPA ASSOCIATION OF GOVERNMENTS.

2. MANY NOTES WITHIN THESE DETAILS REFER TO VARIOUS SECTIONS OF THE "UNIFORM STANDARD SPECIFICATIONS FOR PUBLIC WORKS CONSTRUCTION." WHERE THIS REFERENCE IS MADE, ONLY THE ABBREVIATION "SECT." IS USED. AN EXAMPLE OF THIS REFERENCE WOULD BE: "CLASS 'A' CONCRETE PER SECT. 725."

3. MANY NOTES WITHIN THESE DETAILS REFER TO OTHER DETAILS WITHIN THIS BOOK. WHERE THIS REFERENCE IS MADE, THE ABBREVIATION "STD. DETAIL" IS USED. AN EXAMPLE OF THIS WOULD BE: "SEE STD. DETAIL 391 FOR VALVE BOX INSTALLATION."

4. MANY DETAILS COVER MORE THAN ONE SHEET. THESE SHEETS HAVE BEEN GIVEN THE SAME NUMBER WITH A SUFFIX NUMBER EXAMPLE: 391-1 & 391-2.

5. AN EFFORT HAS BEEN MADE TO INCLUDE THE MOST COMMONLY USED CONSTRUCTION DETAILS IN THIS BOOK. ITEMS WHICH REQUIRE DESIGN CONSIDERATION BY THE DESIGNING ENGINEER HAVE NOT BEEN INCLUDED.

6. SOME OF THE DETAILS PRINTED HERE-IN MAY BE USED BY SOME OF THE AGENCIES AND NOT BY OTHERS. THE DESIGNING ENGINEER SHOULD THEREFORE CONTACT THE AGENCY WITHIN WHOSE JURISDICTION HE IS WORKING FOR DIRECTION AS TO WHICH DETAIL OR PORTIONS OF DETAILS SHOULD BE USED.

7. DETAIL DRAWINGS ARE NOT TO SCALE.

CONCRETE PVMT. SEC.

SUBGRADE SEAL SEC.

SELECT MATERIAL SEC.

AGGREGATE BASE SEC.

BITUMINOUS PVMT. SEC.

SECTION LINE

ROADWAY ℄

SURVEY MONUMENT

FIRE HYDRANT

WATER METER

WATER OR GAS VALVE

GAS METER

MANHOLE

SEWER CLEANOUT

RAILROAD

IRRIGATION LINE

IRRIGATION STANDPIPE

"L" HEADWALL

EXISTING PAVEMENT

OBLITERATE PAVEMENT

CONCRETE PAVEMENT

BITUMINOUS PAVEMENT

TEL. OR TEL. LINE

POWER OR JOINT LINE

DOWN GUY & ANCHOR

STREET LIGHT

STREET SIGN

TRAFFIC SIGN

TRAFFIC SIGNAL LIGHT

SIDEWALK

CURB & GUTTER

VALLEY GUTTER

SINGLE GUTTER

SINGLE CURB

MAIL BOX

EXISTING WATER LINE 6"W

EXISTING TELEPHONE LINE T

EXISTING SEWER LINE 8"S

EXISTING GAS LINE 8"G

EXISTING STORM DRAIN LINE 12"SD

EXISTING IRRIGATION LINE 12"IRR.

DETAIL NO. 110	MARICOPA ASSOCIATION of GOVERNMENTS STANDARD DETAIL	PLANS SYMBOLS		DETAIL NO. 110

100 SERIES
GENERAL INFORMATION

101 GENERAL INFORMATION
110 PLANS SYMBOLS
112 DIMENSIONING FOR ROAD IMPROVEMENT PLANS
120-1 SURVEY MARKER
120-2 SURVEY MARKER (SURVEY FOR UNINCORPORATED AREAS OF COUNTY)
130 BARRICADE
131 STREET SIGN BASE
135-1 STEEL GUARD RAIL
135-2 STEEL GUARD RAIL
135-3 STEEL GUARD RAIL
135-4 STEEL GUARD RAIL
140 SAFETY POST
150 PRECAST SAFETY CURB
160 6' CHAIN LINK FENCE & GATE
170 TYPICAL RUNWAY OR TAXIWAY LIGHTING DETAIL
190 ROCK CORRECTION PROCEDURE FOR MAXIMUM DENSITY DETERMINATION

200 SERIES
STREET INFORMATION

200 BACKFILL, PAVEMENT & SURFACE REPLACEMENT
201 PAVEMENT SECTION AT TERMINATION
202 ALLEY DETAILS (PAVED & UNPAVED)
203 SCUPPER
204 EQUIPMENT CROSSING
205 PAVED TURNOUTS
206-1 CONCRETE SCUPPER
206-2 CONCRETE SCUPPER
220 CURB & GUTTER-TYPES A,B,C & D
221 CURB & GUTTER (TRANSITION, INTEGRAL & WARNING BEACON)
222 SINGLE CURB-TYPES A, B & TERMINATION
223 MEDIAN NOSE TRANSITION
224 JOINT FOR DRAINAGE INLETS AND MANHOLE COVERS
230 SIDEWALKS
231 SIDEWALK RAMPS-TYPE A
232 SIDEWALK RAMPS-TYPE B
233 SIDEWALK RAMPS-TYPE C
234 SIDEWALK RAMPS-TYPE D
240 VALLEY GUTTER
250 DRIVEWAY ENTRANCES
251 RETURN TYPE DRIVEWAYS
252 PARKING BAYS
260 ALLEY ENTRANCE (WITH COMBINED CURB & GUTTER)
261 ALLEY ENTRANCE (WITH ROLL TYPE CURB & GUTTER)
262 WING TYPE ALLEY ENTRANCE (WITH COMBINED CURB & GUTTER)
263 WING TYPE ALLEY ENTRANCE (WITH ROLL TYPE CURB & GUTTER)
270 FRAME & COVER AND GRADE ADJUSTMENT

300 SERIES
WATER INFORMATION

301 BLOCKING FOR WATER GATE & BUTTERFLY VALVES
302-1 JOINT RESTRAINT WITH TIE RODS
302-2 JOINT RESTRAINT WITH TIE RODS
310 CAST IRON WATER METER BOX COVER NO. 1
311 CAST IRON WATER METER BOX COVER NO. 2
312 CAST IRON WATER METER BOX COVER NO. 3
313 CAST IRON WATER METER BOX COVER NO. 4
314 CAST IRON WATER METER BOX COVER NO. 5
320 CONCRETE WATER METER BOX
321 STANDARD WATER METER VAULT
340 INSTALLING TAPPING SLEEVES & VALVES
342 CONCRETE PRESSURE PIPE TAPPING SLEEVE
345-1 3", 4", 6" WATER METER
345-2 4", 6" WATER METER WITH ON-SITE FIRE HYDRANTS
346 FIRE LINE DETECTOR CHECK VAULT
360 FIRE HYDRANT INSTALLATION
362 LOCATIONS FOR NEW HYDRANTS
370 VERTICAL REALIGNMENT OF WATER MAINS
380 THRUST BLOCKS FOR WATER LINES
381 ANCHOR BLOCKS FOR VERTICAL BENDS
389 CURB STOP WITH VALVE BOX & COVER
390 CURB STOP WITH FLUSHING PIPE
391-1 VALVE BOX INSTALLATION AND GRADE ADJUSTMENT
391-2 VALVE BOX INSTALLATION

400 SERIES
SEWER INFORMATION

402 ENCASED PIPE FOR CANAL CROSSINGS
403-1 PIPE SUPPORTS ACROSS TRENCHES
403-2 PIPE SUPPORTS ACROSS TRENCHES
403-3 ALTERNATE TO PIPE SUPPORT
404-1 WATER AND SANITARY SEWER SEPARATION/PROTECTION
404-2 WATER AND SANITARY SEWER SEPARATION/PROTECTION
405 BROKEN SEWER LINE REPLACEMENT
420 PRECAST CONCRETE SEWER MANHOLE
421 OFFSET MANHOLE FOR 8" - 30" PIPE
422 SEWER MANHOLE & COVER FRAME ADJ.
423 WATER TIGHT 30" MANHOLE FRAME & COVER
424 24" & 30" MANHOLE FRAME & COVER
425 24" ALUMINUM MANHOLE FRAME & COVER
426 DROP SEWER CONNECTIONS
427 STUB OUT & PLUGS
428 MANHOLE STEPS
429 INDUSTRIAL WASTE CONTROL VAULT WITH MANHOLE
440 SEWER BUILDING CONNECTION
441 SEWER CLEANOUT

500 SERIES
IRRIGATION & STORM DRAIN INFORMATION

501-1 HEADWALL
501-2 HEADWALL
501-3 HEADWALL - 42" TO 84" PIPE
501-4 HEADWALL IRRIGATION 18" TO 60" PIPE
501-5 HEADWALL - DROP INLET
502-1 TRASH RACK
502-2 TRASH RACK
503 IRRIGATION STANDPIPE
504 CONCRETE BLOCK JUNCTION BOX
505 CONCRETE PIPE COLLAR
506 IRRIGATION VALVE INSTALLATION
507 ENCASED CONCRETE PIPE (FOR SHALLOW INSTALLATION)
510 CORRUGATED METAL PIPE & INSTALLATION
520 STORM DRAIN MANHOLE BASE (48" & SMALLER)
521 STORM DRAIN MANHOLE BASE (51" & LARGER)
522 STORM DRAIN MANHOLE SHAFT
523 PRESSURE MANHOLE
523-2 PRESSURE MANHOLE
524 STORM DRAIN LATERAL PIPE CONNECTIONS
530 3'-6" CURB OPENING CATCH BASIN-TYPE A
531 5'-6" CURB OPENING CATCH BASIN-TYPE B
532 8' CURB OPENING CATCH BASIN-TYPE C
533 CATCH BASIN-TYPE D
533-1 7' CURB OPENING CATCH BASIN-TYPE D
533-2 7' CURB OPENING CATCH BASIN-TYPE D WITH LOCAL DEPRESSION
533-3 7' CURB OPENING CATCH BASIN-TYPE D WITH LOCAL DEPRESSION
533-4 7' CURB OPENING CATCH BASIN-TYPE D WITH LOCAL DEPRESSION
534-1 CATCH BASIN-TYPE E
534-2 CATCH BASIN-TYPE E (DETAILS)
534-3 CATCH BASIN-TYPE "E" (DETAILS)
534-4 CATCH BASIN-TYPE "E" (DETAILS)
534-5 ALTERNATE GRATE STYLES-SUMP LOCATION
535 CATCH BASIN-TYPE F - FOR USE WITHOUT CURB
536 COMMON DETAILS & SECTIONS FOR CURB OPENING CATCH BASINS
537 CATCH BASIN-TYPE G
538 CATCH BASIN-TYPE H
539 GRATES FOR CATCH BASINS, TYPE G AND H
540-1 CATCH BASIN GRATES
540-2 CATCH BASIN GRATES
545 END SECTION-REINFORCED CONCRETE PIPE
550 SPILLWAY INLET & OUTLET
552 CONCRETE CUT-OFF WALLS
555 EROSION PROTECTION/RIPRAP

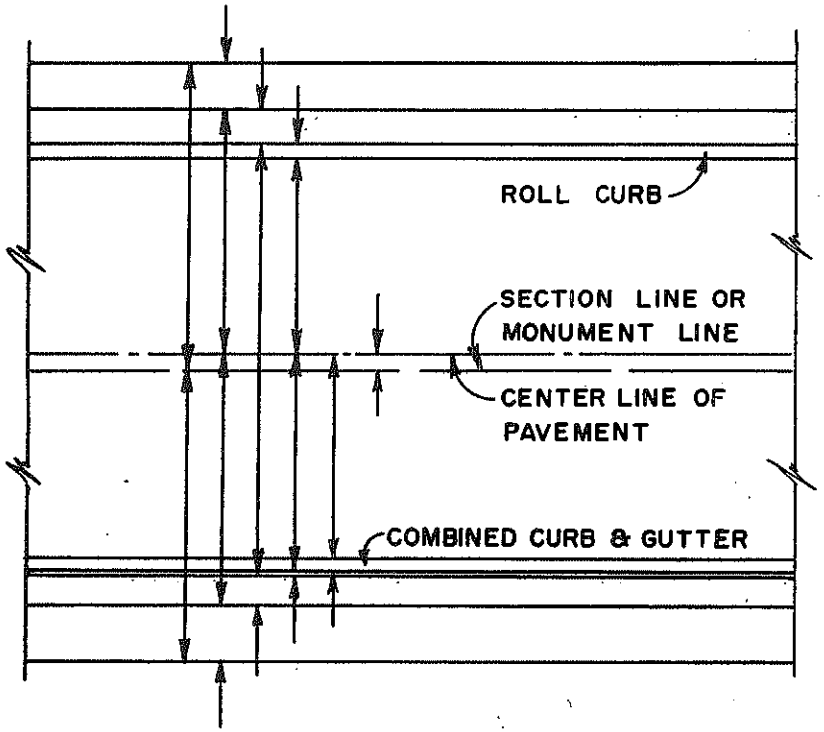

DIMENSION SHOULD BE GIVEN ONCE ON EACH SHEET AND SHOULD BE PLACED NEAR THE CENTER OF THE SHEET. IF ANY OF THE GIVEN CONDITIONS CHANGE, THEY SHOULD BE REDIMENSIONED OF THE POINT OF CHANGE.

GIVEN DIMENSIONS IN ORDER STARTING WITH THE LONGEST AND ENDING WITH THE SHORTEST, AS SHOWN IN THE SKETCH.

GIVE COMPLETE DIMENSIONS.

IF THE CENTERLINE OF PAVEMENT DOES NOT FALL ON THE SECTION LINE OR MONUMENT LINE OF THE STREET DIMENSION AS ABOVE AND ALSO SHOW DIFFERENCE BETWEEN ℄ AND ℄.

DETAIL NO. 112	MARICOPA ASSOCIATION of GOVERNMENTS STANDARD DETAIL	DIMENSIONING FOR ROAD IMPROVEMENT PLANS		DETAIL NO. 112

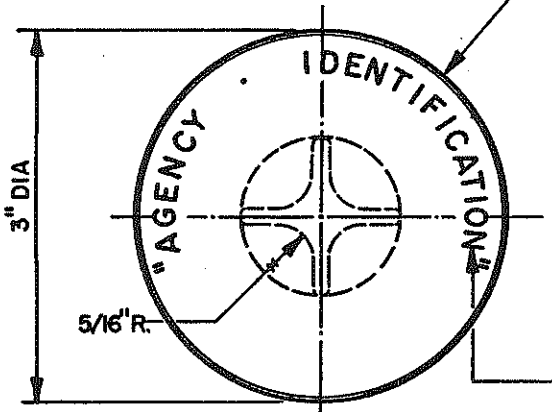

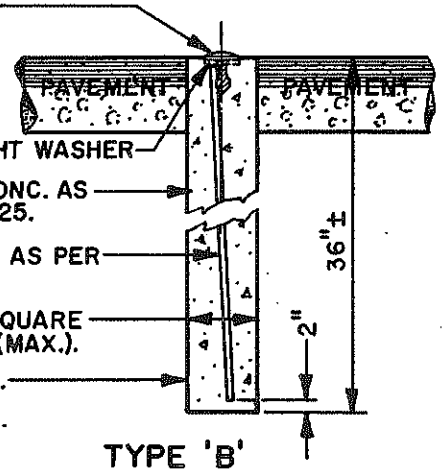

TYPE 'B'
(WITHOUT FRAME)

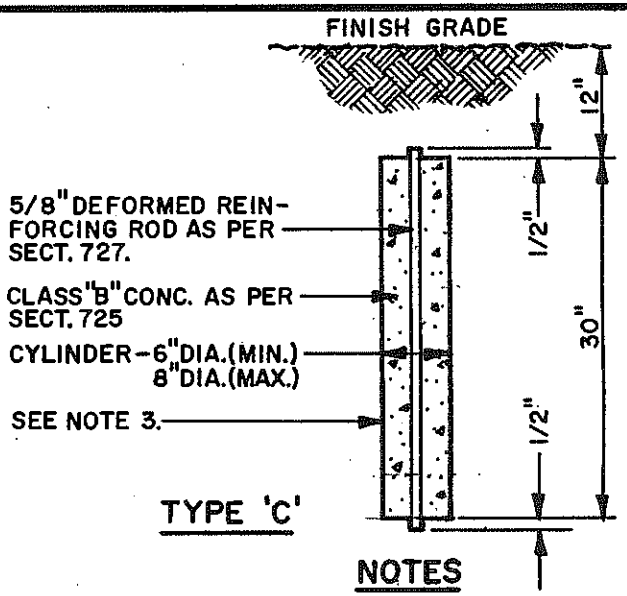

TYPE 'C'

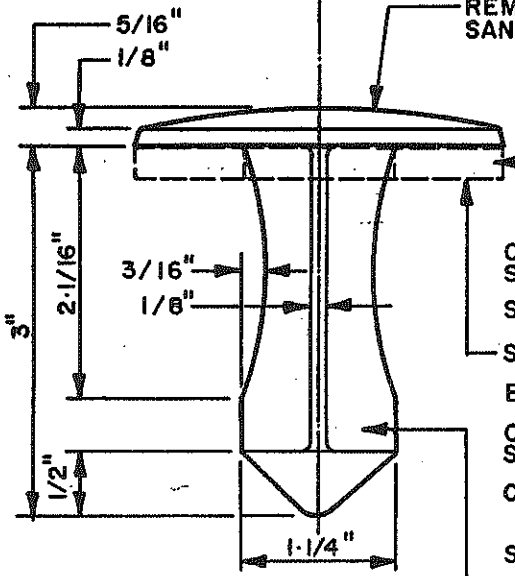

CAP DETAIL

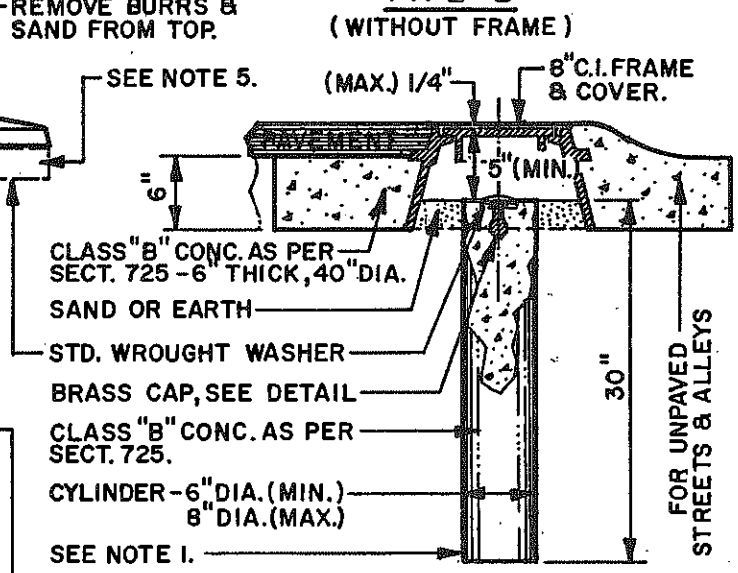

TYPE 'A' (WITH FRAME PER STD. DETAIL 270)

NOTES

1. TYPE 'A' TO BE USED AT INTERSECTIONS OF MAJOR STREETS & COLLECTOR STREETS, & AT OTHER SPECIAL POINTS IF REQUIRED BY ENGINEER, AS SHOWN ON PLANS.
2. TYPE 'B' TO BE USED AT INTERSECTION OF STREET ℄'S (EXCEPT WHERE TYPE 'A' IS SPECIFIED), CORNERS OR CHANGES IN ALIGNMENT OF SUBDIVISION BOUNDARIES (WHEN THEY FALL IN PAVEMENT), P.C.'S & P.T.'S OF CURVES. WHEN P.I. FALLS IN PAVEMENT, THEN THE P.I. SHALL BE MONUMENTED.
3. TYPE 'C' TO BE USED AT CORNERS OF, & CHANGE IN ALIGNMENT OF SUBDIVISION BOUNDARIES WHERE CORNERS OR CHANGE POINTS FALL OUTSIDE OF PAVED AREAS OR IN ALLEYS.
4. LETTERS TO BE APPROX. 1/32" WIDE & 1/32" DEEP.
5. USE STANDARD WROUGHT IRON WASHER 3" O.D. X 11/64" THICK WITH 1-3/8" HOLE.
6. CAP TO BE CONSTRUCTED OF RED BRASS OR BRONZE.
7. FRAME & COVER TO INCLUDE CHAIN PER STD. DET. 270. (OPTIONAL PER AGENCY REQUIREMENT).

DETAIL NO. 120-1	MARICOPA ASSOCIATION of GOVERNMENTS STANDARD DETAIL	SURVEY MARKER		DETAIL NO. 120-1

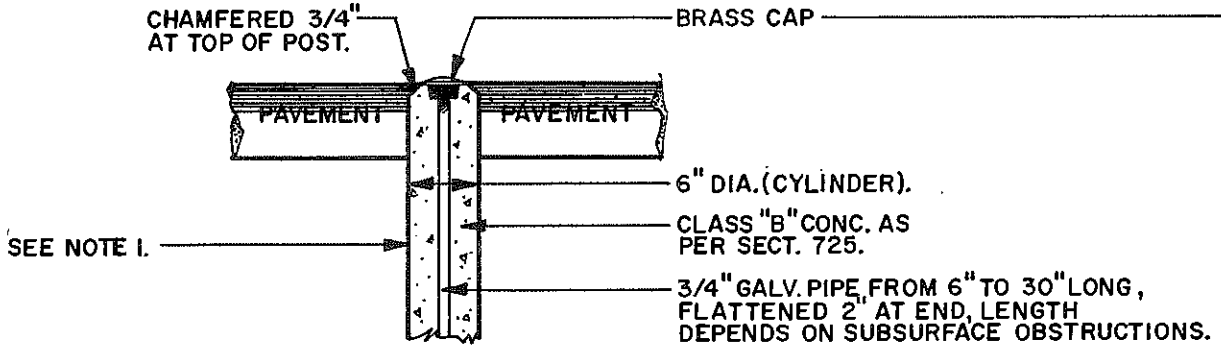

TYPE 'D' (WITHOUT FRAME)

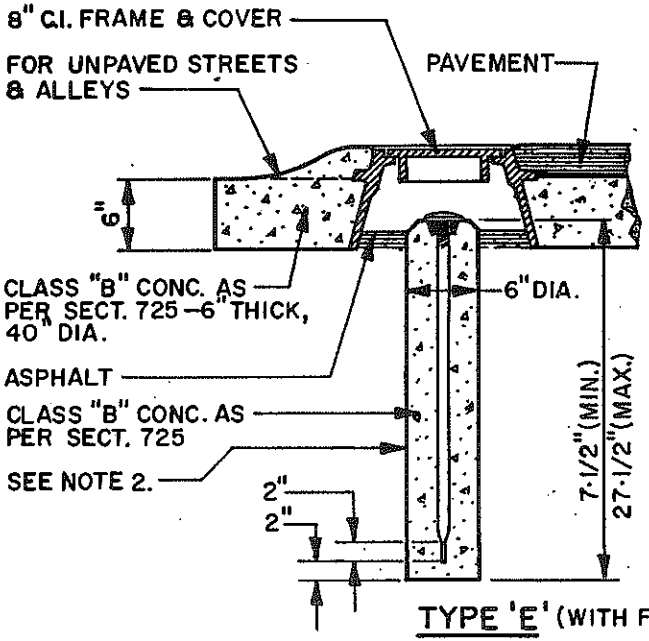

TYPE 'E' (WITH FRAME)

NOTES

1. TYPE 'D' NORMALLY USED AT STREET INTERSECTIONS, AS SUBDIVISION MONUMENTS AND 1/16 CORNERS.
2. TYPE 'E' NORMALLY USED ON SECTION CORNERS, 1/4 CORNERS AND AT THE CENTER OF SECTIONS. CONCRETE POST IS CHAMFERED 3/4" AT TOP, MIN. LENGTH OF POST 7-1/2", MAX. LENGTH 27-1/2", LENGTH DEPENDS ON SUBSURFACE OBSTRUCTIONS SUCH AS OLD CONCRETE PAVING, ROCK, ETC... 3/4" GALV. PIPE SET IN THIS POST SHALL BE A MIN. OF 6" LONG AND A MAX. OF 24" EXCLUSIVE OF COUPLING, SEE PLANS.
3. CAP TO BE CONSTRUCTED OF RED BRASS OR BRONZE.
4. FRAME & COVER TO INCLUDE CHAIN PER STD. DETAIL 270.

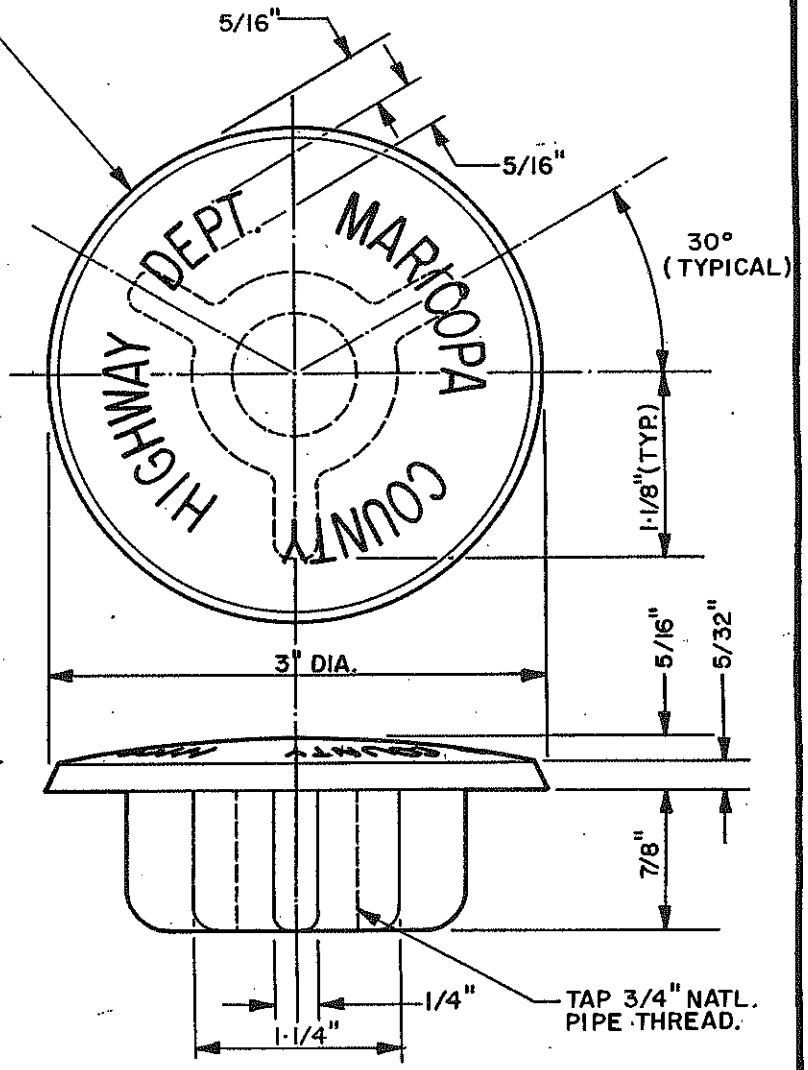

CAP DETAIL

DETAIL NO. 120-2	MARICOPA ASSOCIATION of GOVERNMENTS STANDARD DETAIL	SURVEY MARKER (SURVEY MARKER FOR UNINCORPORATED AREAS OF COUNTY)	DETAIL NO. 120-2

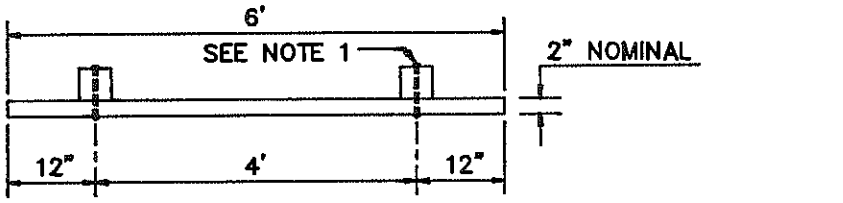

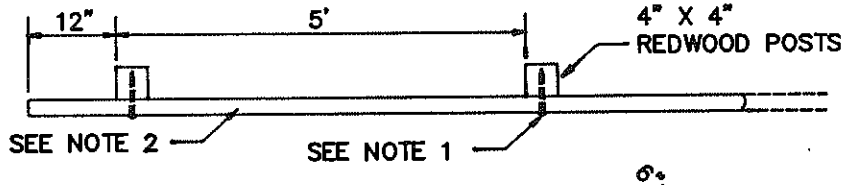

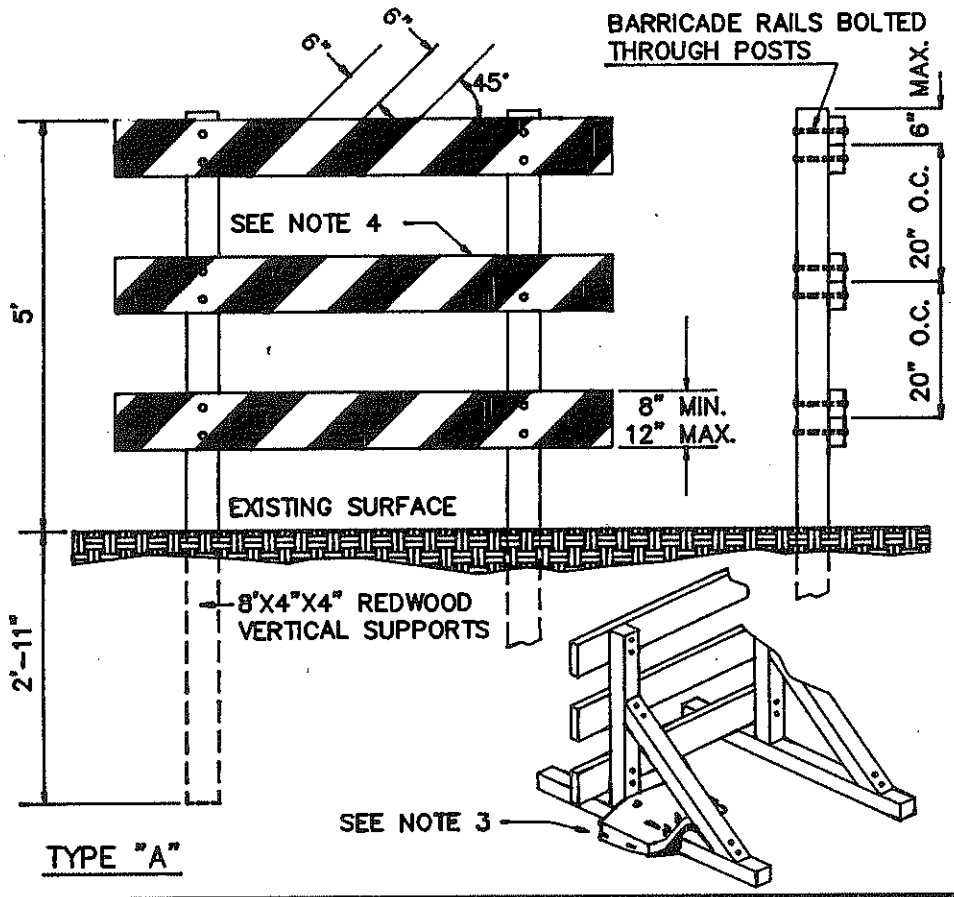

TYPE "A"

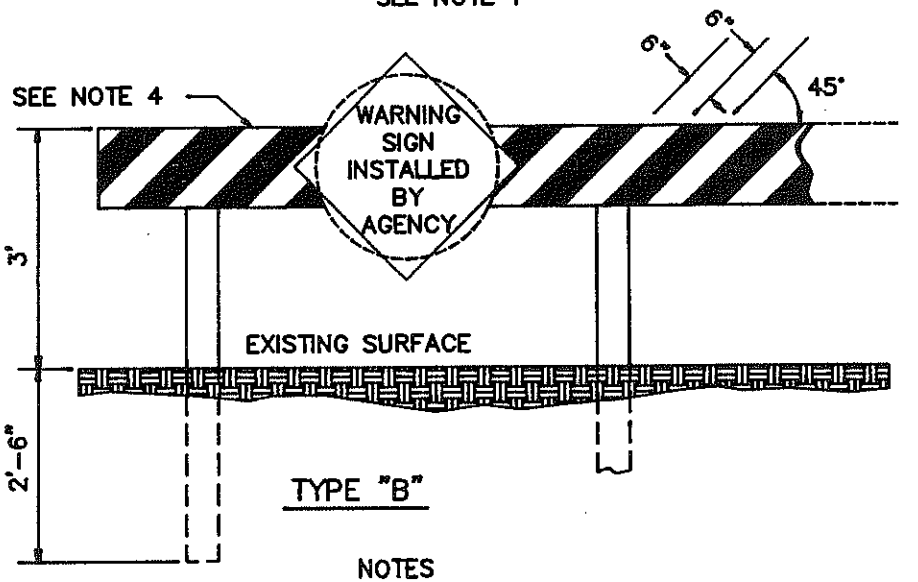

TYPE "B"

NOTES

1. FASTEN WITH 1/2" X 5" LAG SCREWS WITH 2 FLAT WASHERS OR (2) 5/8" BOLTS, WITH 4 FLAT WASHERS.
2. 2" X 8" DOUGLAS FIR PLANK (LENGTH TO BE DETERMINED ON PLANS.)
3. WHEN BARRICADE (TYPE "A") IS CONSTRUCTED ON BASES INSTEAD OF POSTS SET INTO THE GROUND, IT MAY BE DESIRABLE TO BALLAST THE BASES WITH SAND BAGS OR BY STAKING TO PROVIDE RESISTANCE TO OVERTURNING DURING PERIODS OF HIGH WINDS.
4. TYPE "A" AND "B" MARKINGS SHALL BE ALTERNATE RED AND WHITE ENGINEERING GRADE REFLECTIVE STRIPES (SLOPING DOWNWARD IN THE DIRECTION TRAFFIC IS TO PASS).

DETAIL NO. 130	MARICOPA ASSOCIATION of GOVERNMENTS STANDARD DETAIL	BARRICADE		DETAIL NO. 130

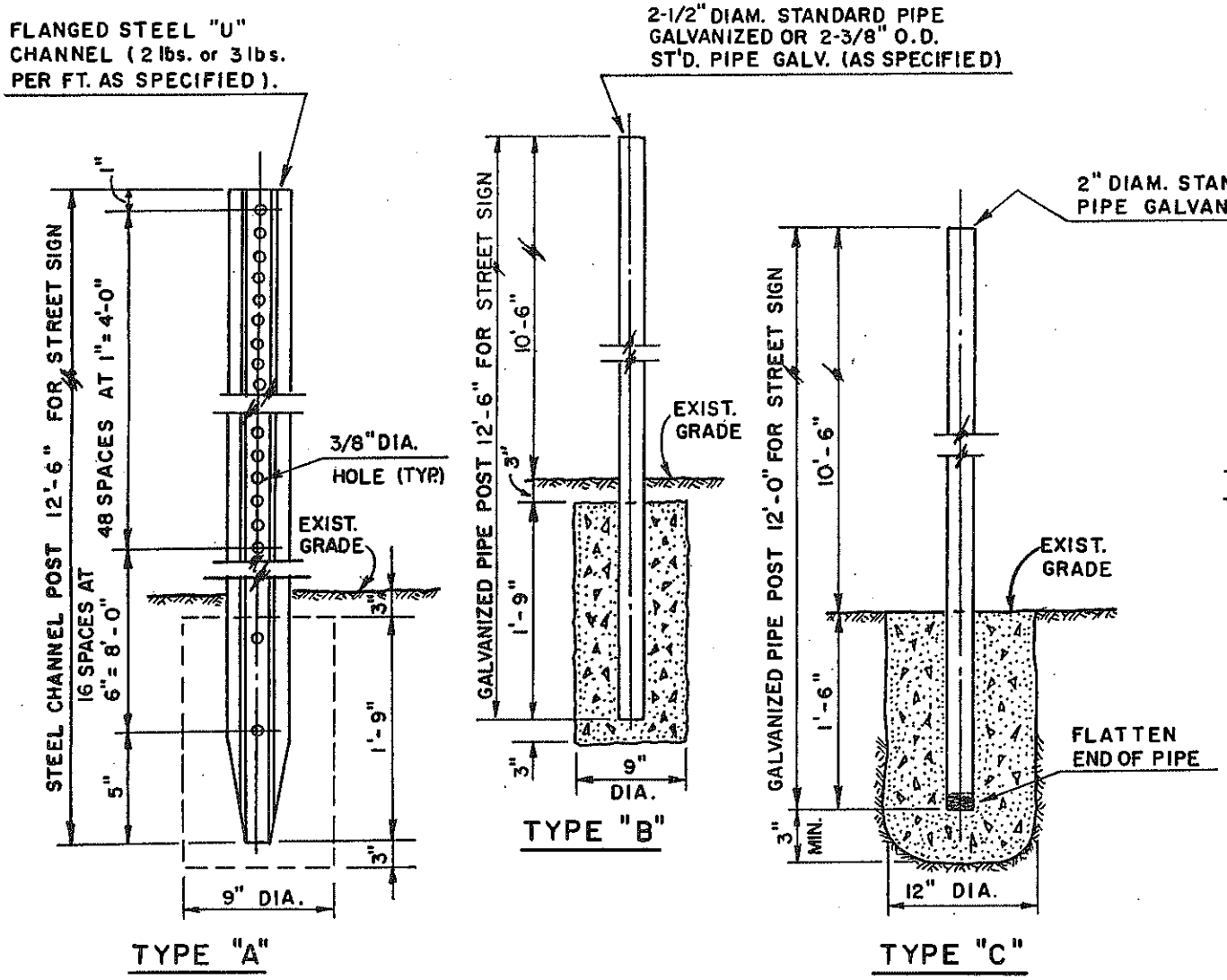

NOTES

TYPE "A" USE DRIVING HEAD FOR DRIVING ALL FLANGED STEEL "U" CHANNEL POSTS.

IN LIEU OF DRIVING, FLANGED STEEL "U" CHANNEL POSTS MAY BE SET IN CONCRETE BASE FOUNDATION AS PER TYPE "B" BASE.

TYPE "B" & TYPE "C" CONCRETE BASE FOUNDATIONS SHALL BE CLASS "C" CONCRETE AS PER SECT. 505 & 725.

DETAIL NO. 131	MARICOPA ASSOCIATION of GOVERNMENTS STANDARD DETAIL	STREET SIGN BASE		DETAIL NO. 131

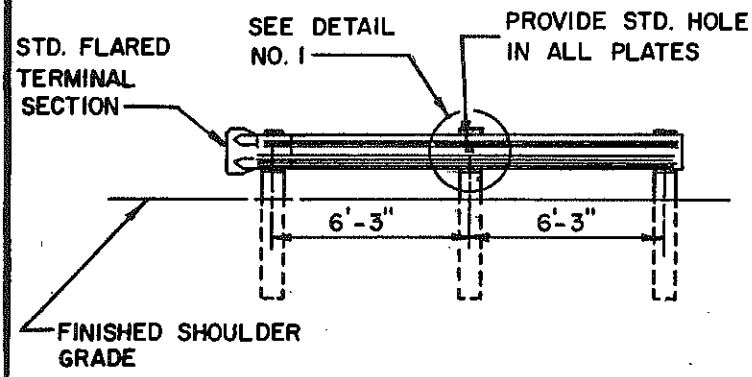

FACE ELEVATION

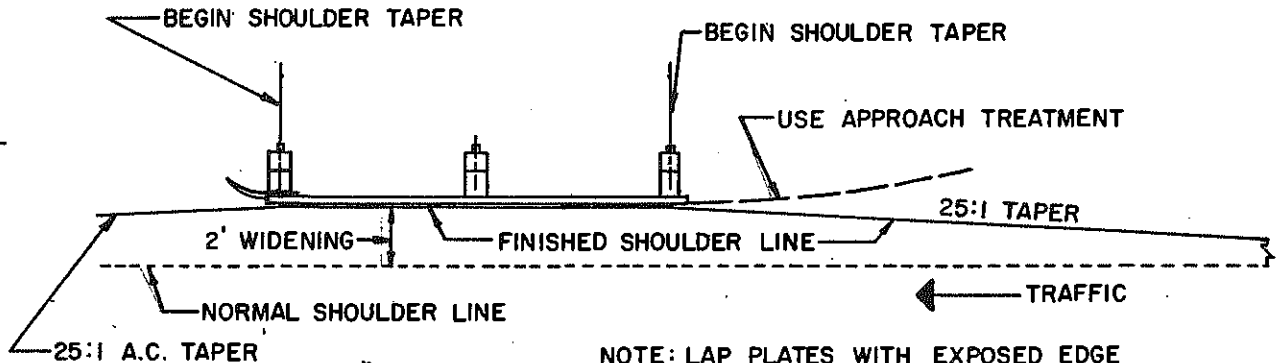

PLAN

NOTE: LAP PLATES WITH EXPOSED EDGE AWAY FROM APPROACHING TRAFFIC.

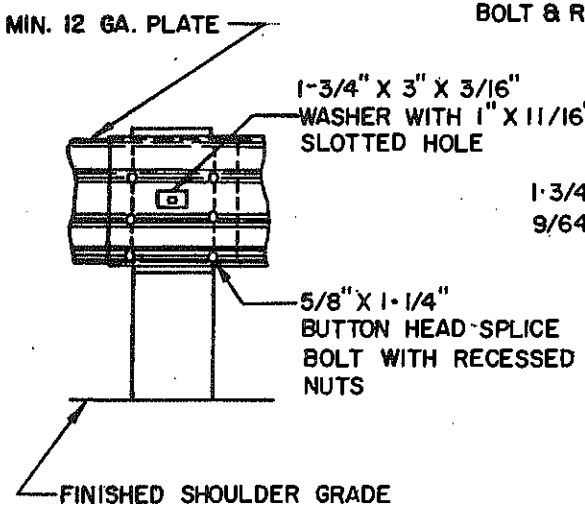

DETAIL NO.1

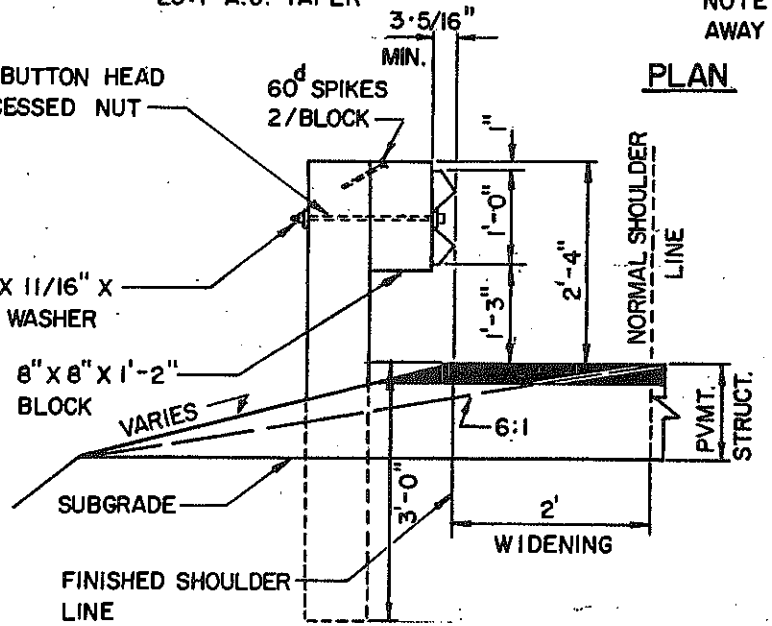

SIDE ELEVATION

NOTES

1. POSTS AND BLOCKS SHALL BE NOMINAL 8"X8" ROUGH WOOD, PRESSURE TREATED AND UNPAINTED. HOLES SHALL BE BORED BEFORE TREATMENT. SEE SECT. 415.
2. ALL GUARD RAIL PLATE, FITTINGS, HARDWARE, ETC. SHALL BE GALVANIZED.
3. TYPE 'A' GUARD RAIL INSTALLED ON NORMAL SHOULDER LINE.
4. TYPE 'B' GUARD RAIL INSTALLED ON WIDENED ROADWAY SHOULDER LINE.
5. TYPE 'B' INSTALLATION SHOWN. TYPE 'A' INSTALLATION SAME EXCEPT THAT INSIDE FACE OF GUARD RAIL SHALL FALL ON THE NORMAL SHOULDER LINE AS INDICATED BY PLAN DRAWING.

DETAIL NO. 135-1	MARICOPA ASSOCIATION of GOVERNMENTS STANDARD DETAIL	STEEL GUARD RAIL		DETAIL NO. 135-1

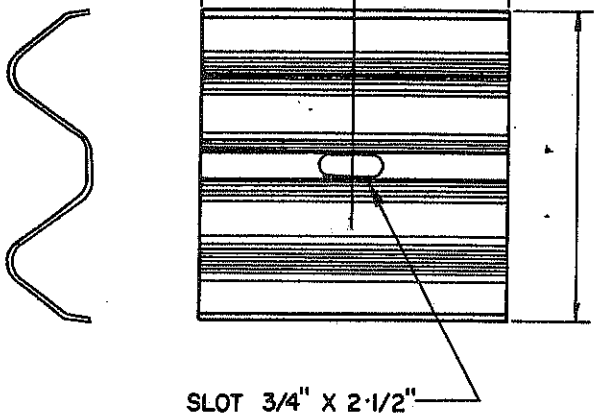

"W" SECTION BACK-UP PLATE
FOR STEEL POSTS

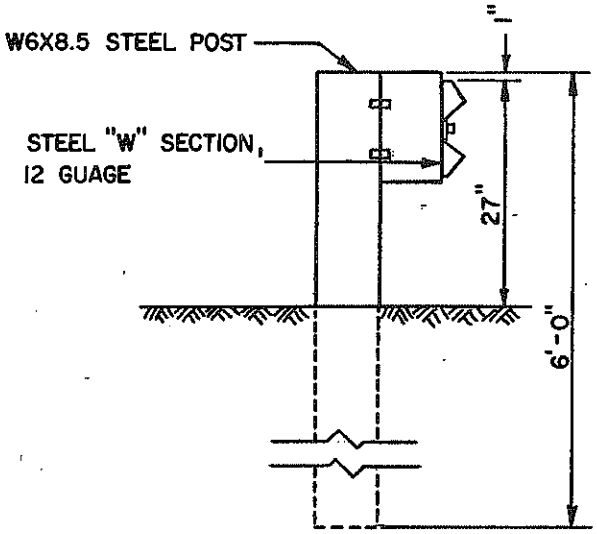

"W" BEAM (STEEL POST)

DETAIL NO.				DETAIL NO.
135-2	MARICOPA ASSOCIATION of GOVERNMENTS STANDARD DETAIL	STEEL GUARD RAIL		135-2

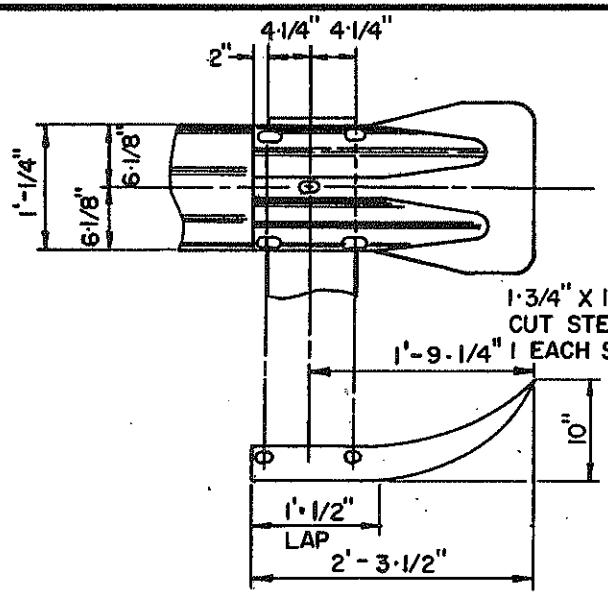

STANDARD FLARED TERMINAL SECTION

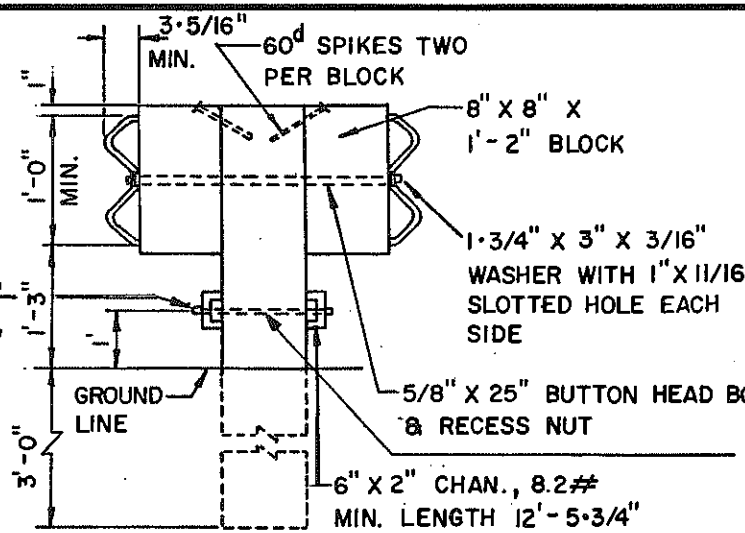

DETAIL NO.2 - MEDIAN BARRIER

NOTES

1. TOP AND RUB RAIL BOLTS SHALL NOT PROJECT MORE THAN 1". IF ADJUSTMENT SHORTENING IS REQUIRED, THREADS SHALL BE LEFT IN FUNCTIONAL CONDITION.
2. HORIZONTAL DISTANCE BETWEEN TOP RAIL AND MEDIAN CURB SHALL NOT EXCEED 1'.

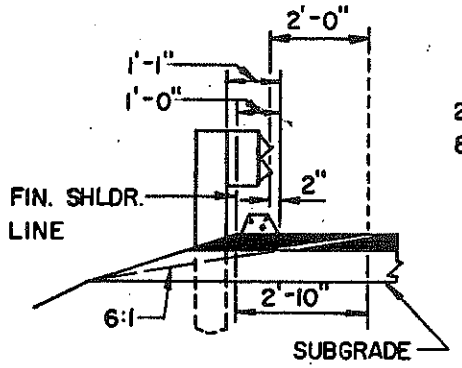

INSTALLATION OF GUARD RAIL IN EMBANKMENT CURB SECTIONS

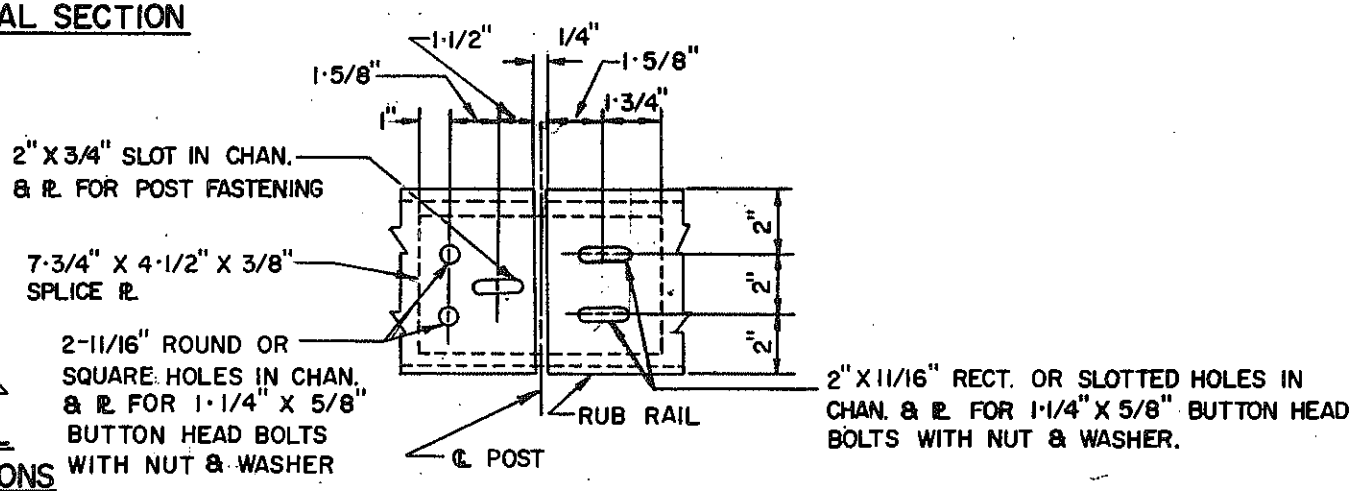

DET. NO.3 - RUB RAIL SPLICE (SPLICE AT POSTS ONLY)

DETAIL NO. 135-3	MARICOPA ASSOCIATION of GOVERNMENTS STANDARD DETAIL	STEEL GUARD RAIL		DETAIL NO. 135-3

5/8" MACH. BOLT & 1·3/4" X 11/16" X 9/64" WASHER. LENGTH DETERMINED BY TOTAL BLOCK THICKNESS AND SELF DRILLING ANCHOR.

5/8" X 8·1/2" CARRIAGE BOLT. USE 2-1·3/4" X 3" X 3/16" WASHERS WITH 1 X 11/16" SLOTTED HOLES, ONE OF WHICH SHALL BE RECESSED 1" INTO BACK OF BLOCK.

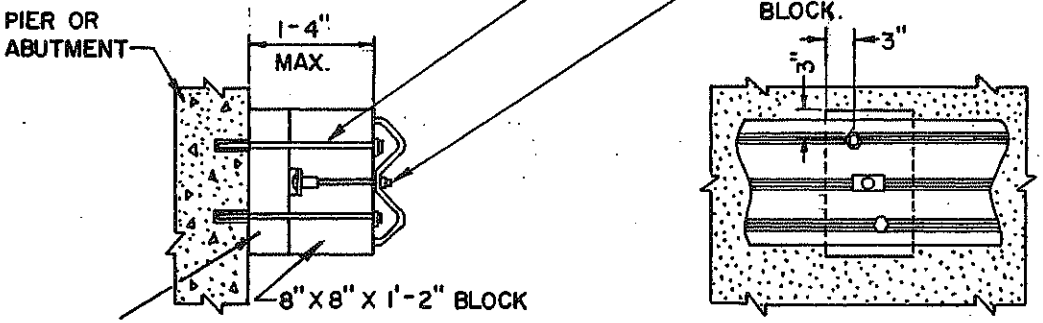

SECTION

ELEVATION

DETAIL NO.4
ATTACHMENT OF GUARD RAIL TO STRUCTURES

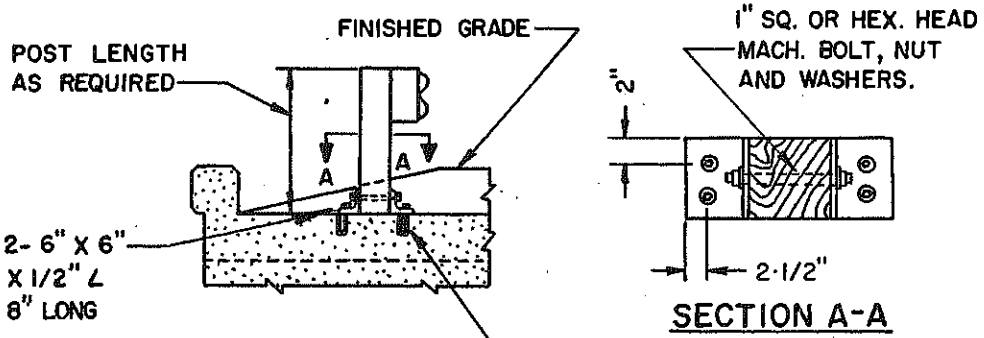

ELEVATION

SECTION A-A

4-5/8" BOLT SIZE SELF DRILLING ANCHOR & BOLTS. SEE NOTE 1.

DETAIL NO.1- GUARD RAIL POST INSTALLATION ON STRUCTURES

NOTES

1. 5/8" BOLT SIZE SELF DRILLING ANCHOR SHALL HAVE A MINIMUM 1500# PULL OUT STRENGTH IN 2500 P.S.I. CONCRETE IN ACCORDANCE WITH MANUFACTURER'S SPECIFICATIONS.

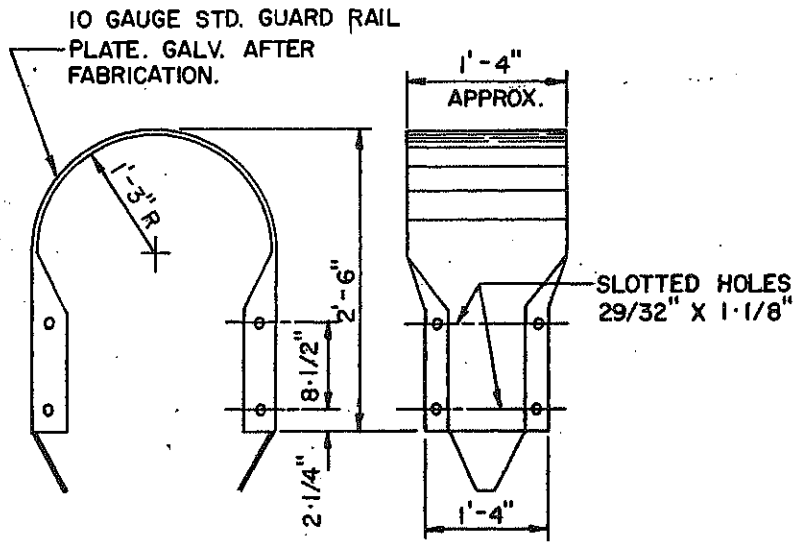

DETAIL NO.5 – BUFFER END SECTION

DETAIL NO. 135-4	MARICOPA ASSOCIATION of GOVERNMENTS STANDARD DETAIL	STEEL GUARD RAIL		DETAIL NO. 135-4

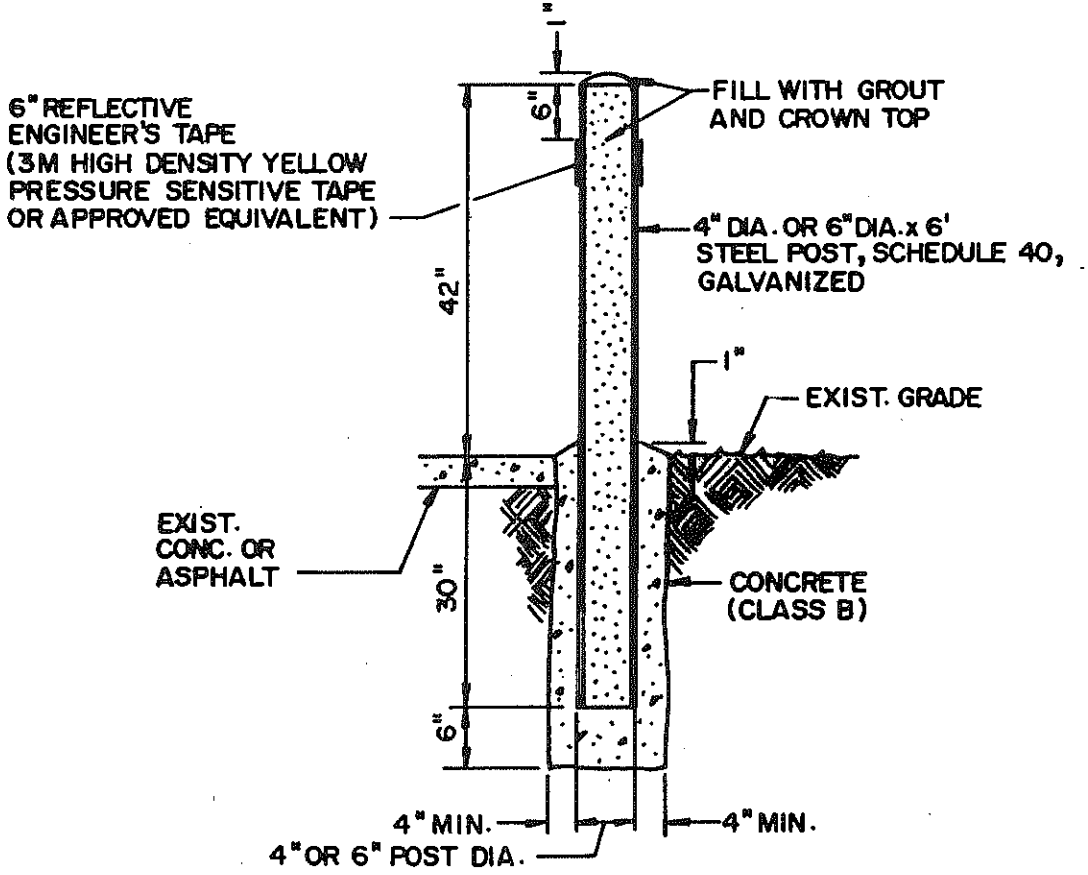

SAFETY POST SECTION

N.T.S.

DETAIL NO. 140	MARICOPA ASSOCIATION of GOVERNMENTS STANDARD DETAIL	SAFETY POST		DETAIL NO. 140

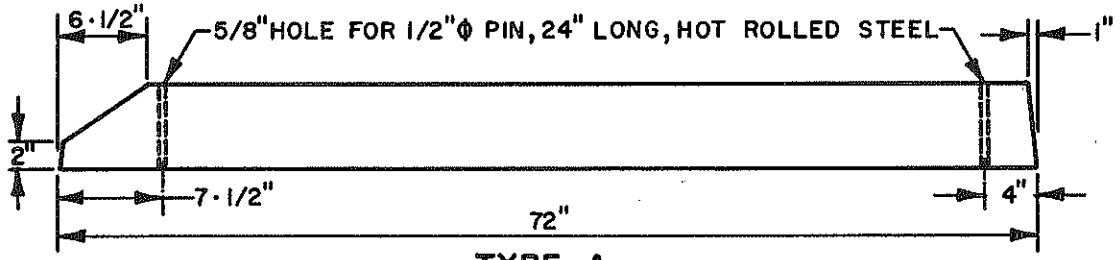

TYPE A

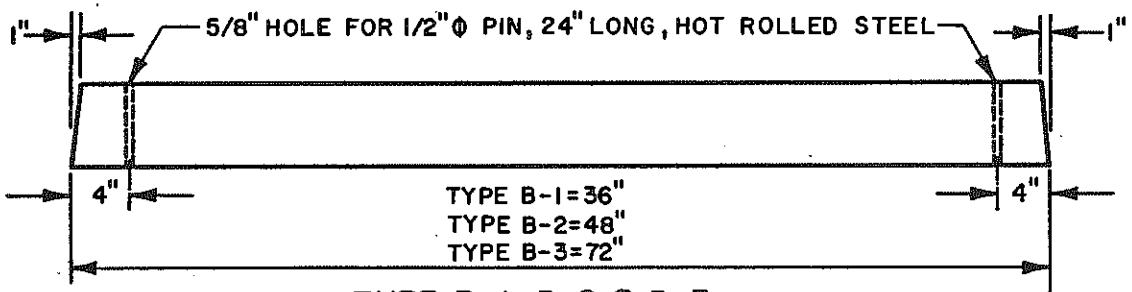

TYPE B-1, B-2 & B-3

NOTE: DIMENSIONAL AND REINFORCEMENT CHANGES WILL BE PERMITTED UPON PRIOR WRITTEN APPROVAL OF THE ENGINEER.

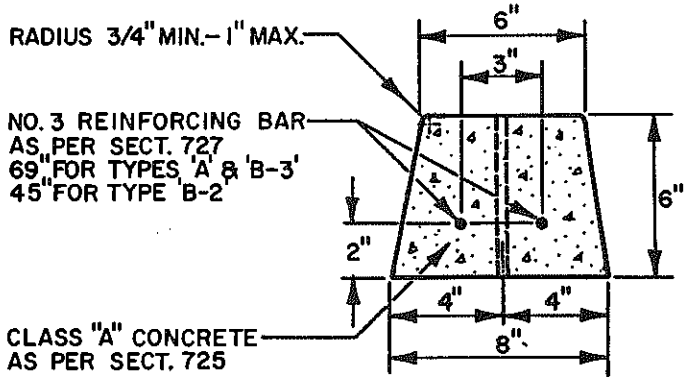

TYPICAL SECTION

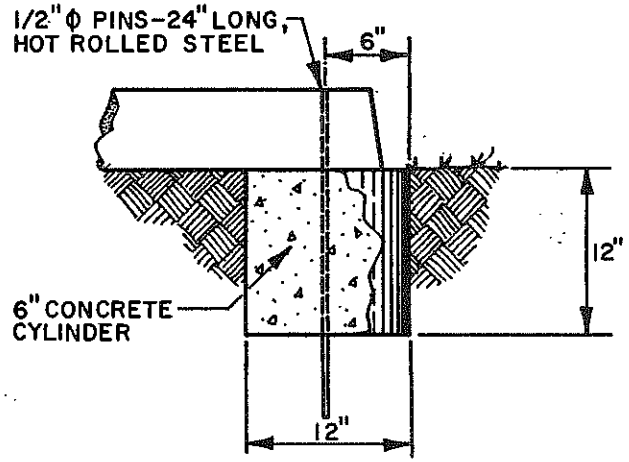

SAFETY CURB
INSTALLATION ON DIRT

DETAIL NO. 150	MARICOPA ASSOCIATION of GOVERNMENTS STANDARD DETAIL	PRECAST SAFETY CURB		DETAIL NO. 150

3 STRANDS-4 POINT BARBED WIRE
UNLESS OTHERWISE SPECIFIED

1. ALL CONCRETE SHALL BE CLASS 'C' PER SECT. 725.
2. FITTINGS NOT SPECIFICALLY DETAILED SHALL BE HEAVY DUTY DESIGN.
3. STRAIN POSTS SHALL BE SPACED AT 500' MAXIMUM SPACING.
4. BOTH CORNER AND STRAIN POSTS SHALL HAVE STRAIN PANELS.
5. ALL POSTS SHALL BE CAPPED.
6. MEMBER SIZES SHALL BE THE FOLLOWING:

MEMBER	AISC SIZE	OUTSIDE DIA.
CORNER POST	2 1/2"	2.875"
LINE POST	1 1/2"	1.900'
STRAIN POST	1 1/2"	1.900"
BRACE	1 1/4"	1.666"
STRETCH BAR	3/16" X 3/4" FLAT	
GATE POST	3 1/2"	4.000"
TOP RAIL	1 1/4"	1.666"

7. CONSTRUCTION AND MATERIALS SHALL CONFORM TO SECTIONS 420 AND 772 RESPECTIVELY. SEE TABLE 772 FOR WEIGHTS OF MEMBERS.

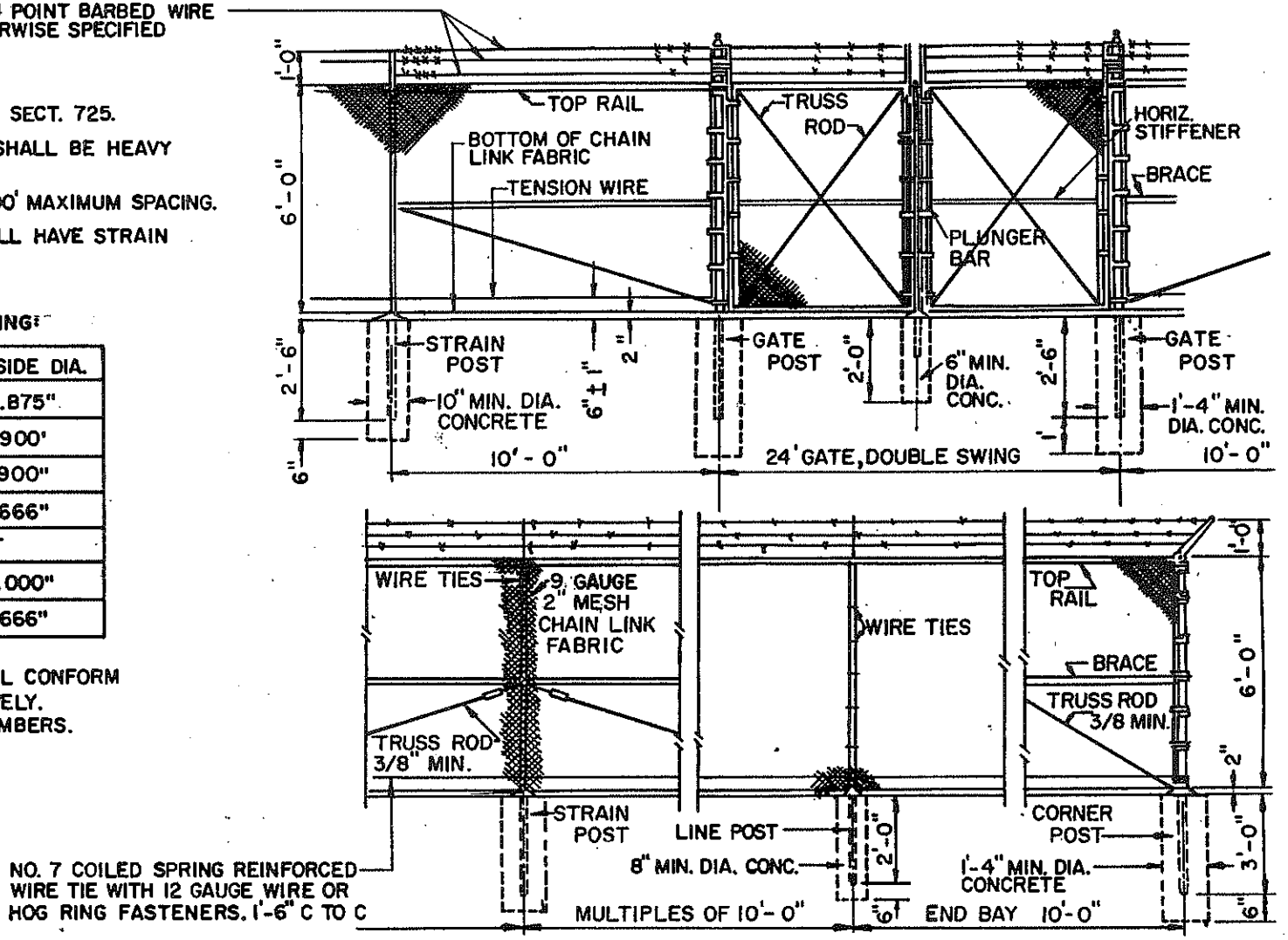

DETAIL NO.			DETAIL NO.
160	MARICOPA ASSOCIATION of GOVERNMENTS STANDARD DETAIL	6' CHAIN LINK FENCE & GATE	160

NOTE: L-___ NUMBERS DESIGNATES FAA SPECIFICATION NO.

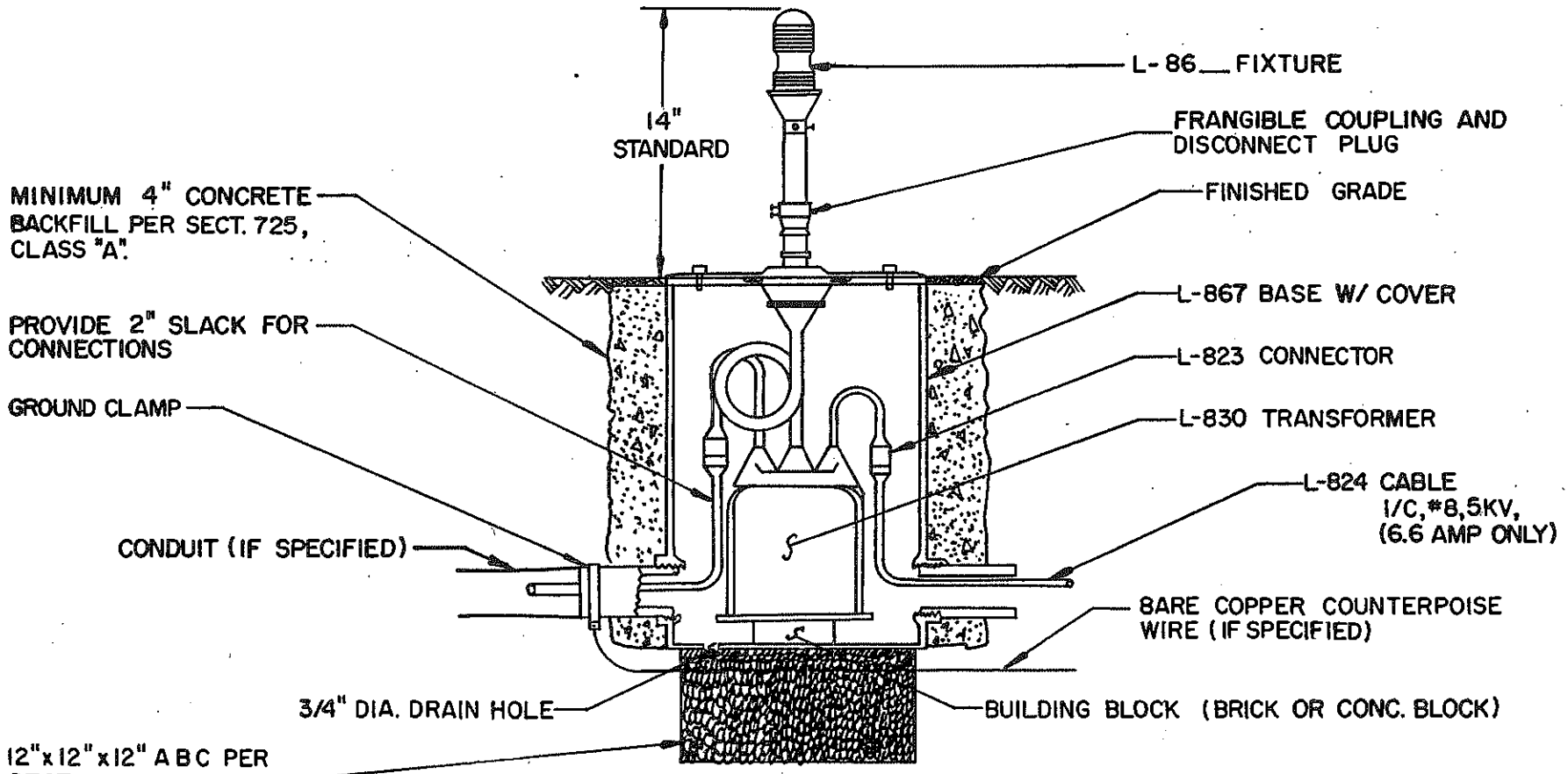

DETAIL NO. 170	MARICOPA ASSOCIATION of GOVERNMENTS STANDARD DETAIL	TYPICAL RUNWAY OR TAXIWAY EDGE LIGHTING DETAIL		DETAIL NO. 170

REVISED 1998

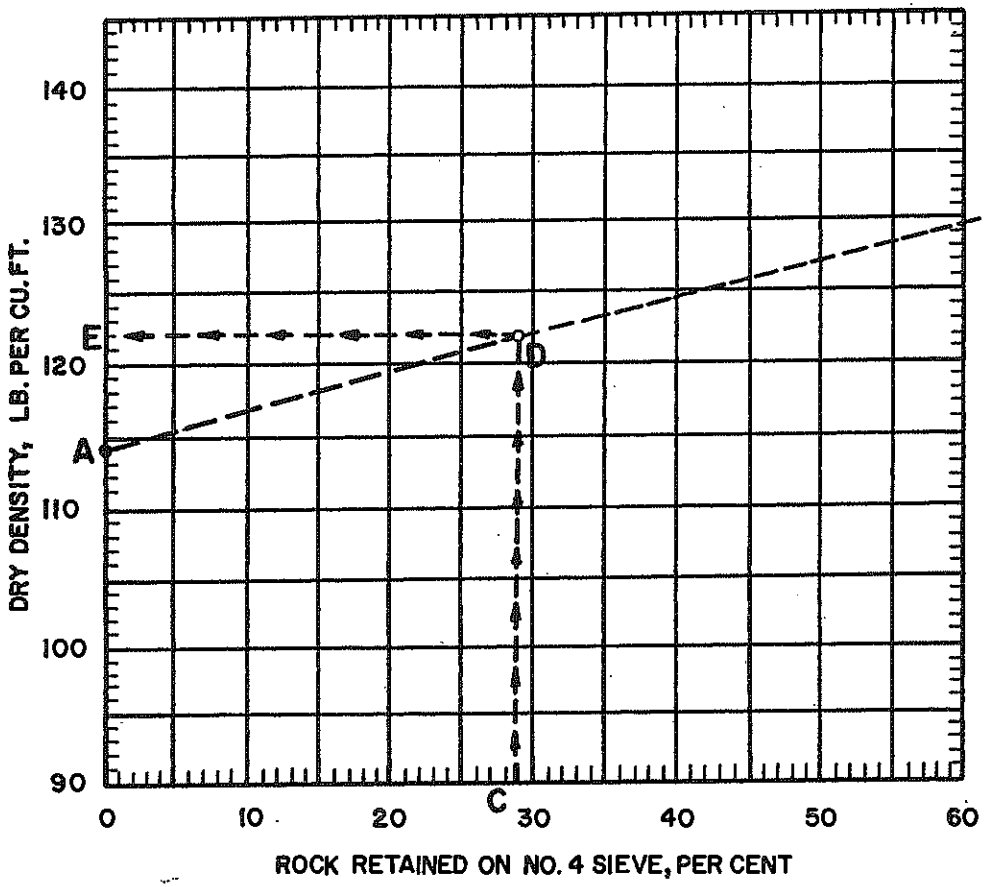

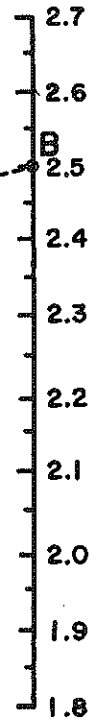

$$D = \frac{(100-R)d + 0.9\,RS \times 62.4}{100}$$

WHERE:

D = DRY DENSITY OF SAMPLE CONTAINING R PERCENT ROCK, LB. PER CU. FT.
R = PERCENT ROCK RETAINED ON NO. 4 SIEVE.
d = DRY DENSITY OF PORTION PASSING NO. 4 SIEVE, LB. PER CU. FT.
S = BULK SP. GR. OF ROCK.

EXAMPLE:

KNOWN: DRY DENSITY OF MATERIAL PASSING NO. 4 SIEVE = 114 LB. PER CU. FT. PLOT AT A.
KNOWN: SPECIFIC GRAVITY OF ROCK = 2.5 PLOT AT B. DRAW LINE AB.
KNOWN: PERCENT OF ROCK IN TOTAL SAMPLE = 29. PLOT AT C. DRAW LINE CD AND LOCATE D AT INTERSECTION WITH AB. DRAW LINE DE LOCATING POINT E AT 122. 122 = DRY DENSITY IN LB. PER CU. FT. OF TOTAL SAMPLE CONTAINING 29% ROCK.

DETAIL NO. 190	MARICOPA ASSOCIATION of GOVERNMENTS STANDARD DETAIL	ROCK CORRECTION PROCEDURE FOR MAXIMUM DENSITY DETERMINATION		DETAIL NO. 190

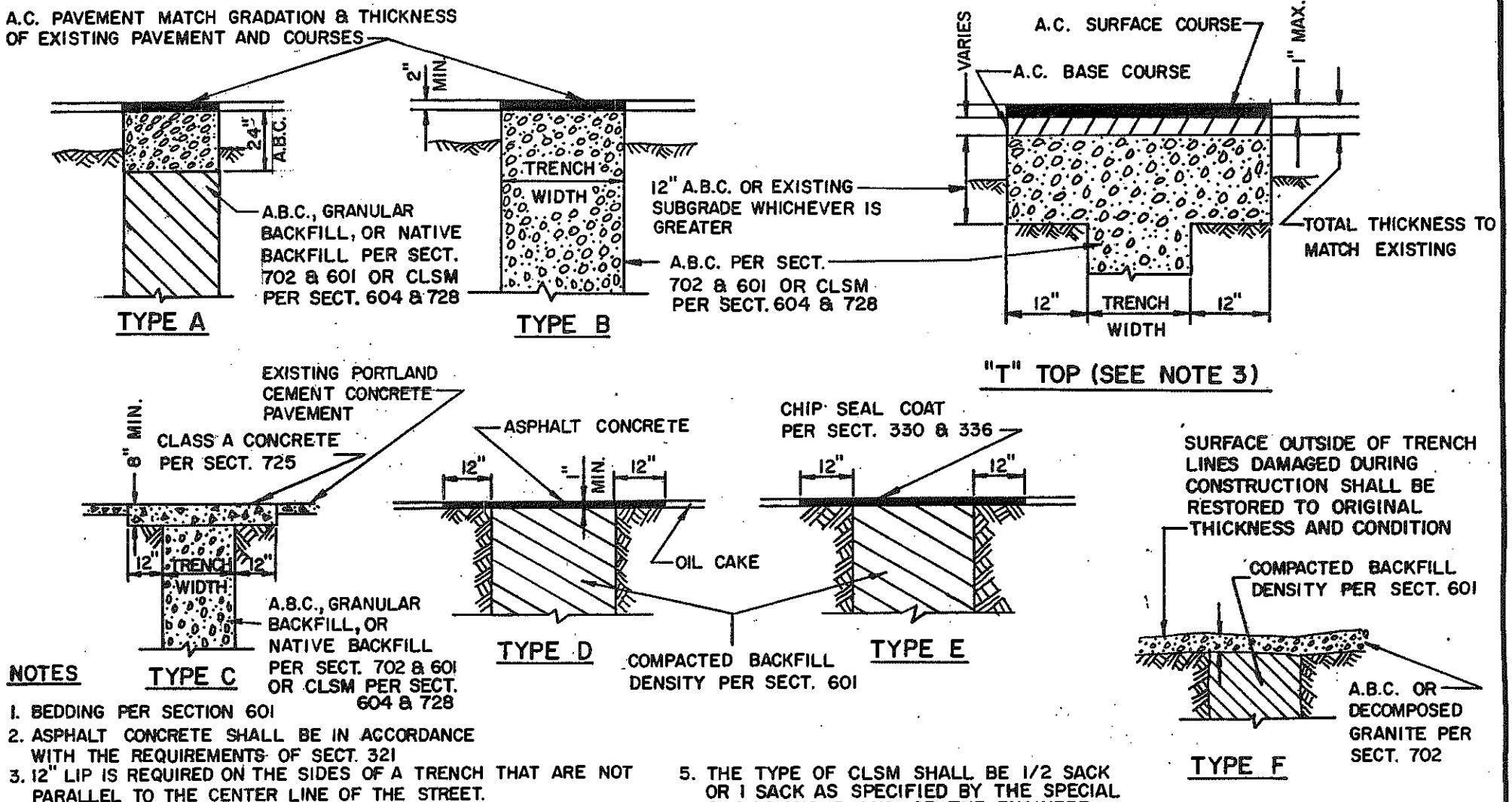

NOTES

1. BEDDING PER SECTION 601
2. ASPHALT CONCRETE SHALL BE IN ACCORDANCE WITH THE REQUIREMENTS OF SECT. 321
3. 12" LIP IS REQUIRED ON THE SIDES OF A TRENCH THAT ARE NOT PARALLEL TO THE CENTER LINE OF THE STREET.
4. TYPES D & E REQUIRE 9" OF A.B.C. AT TOP OF TRENCH WHEN THERE IS AN EXISTING BASE.
5. THE TYPE OF CLSM SHALL BE 1/2 SACK OR 1 SACK AS SPECIFIED BY THE SPECIAL PROVISIONS, PLANS, OR THE ENGINEER.

DETAIL NO. 200	MARICOPA ASSOCIATION of GOVERNMENTS STANDARD DETAIL	BACKFILL, PAVEMENT & SURFACE REPLACEMENT		DETAIL NO. 200

REVISED 1998

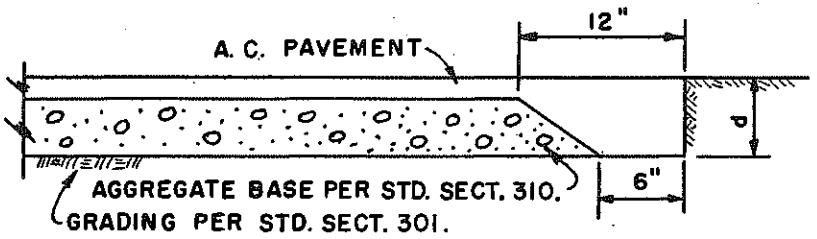

d = DESIGN THICKNESS OF A.C. PAVEMENT PLUS AGGREGATE BASE

TYPE "A"

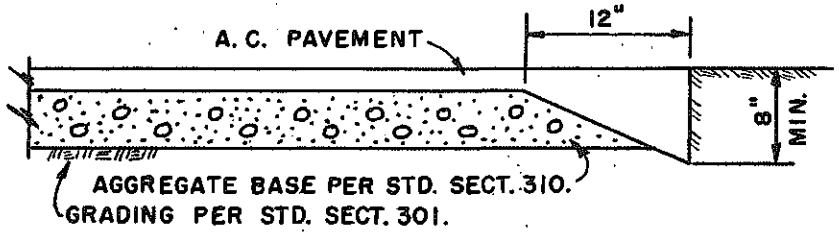

TYPE "B"

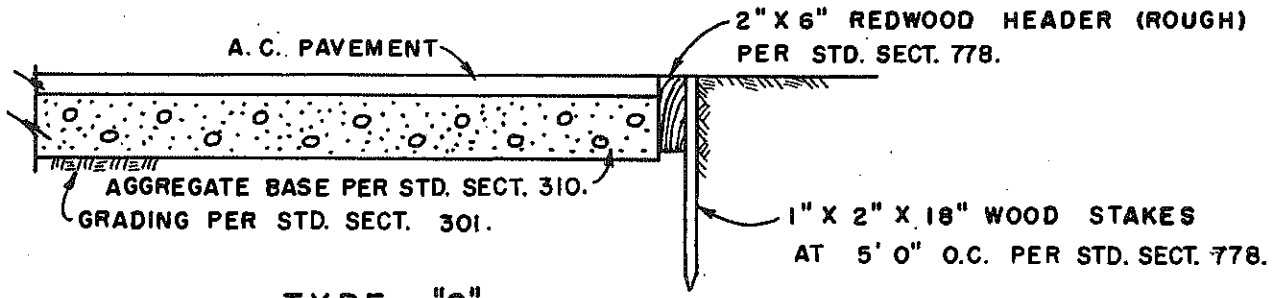

TYPE "C"

DETAIL NO. 201	MARICOPA ASSOCIATION of GOVERNMENTS STANDARD DETAIL	PAVEMENT SECTION AT TERMINATION		DETAIL NO. 201

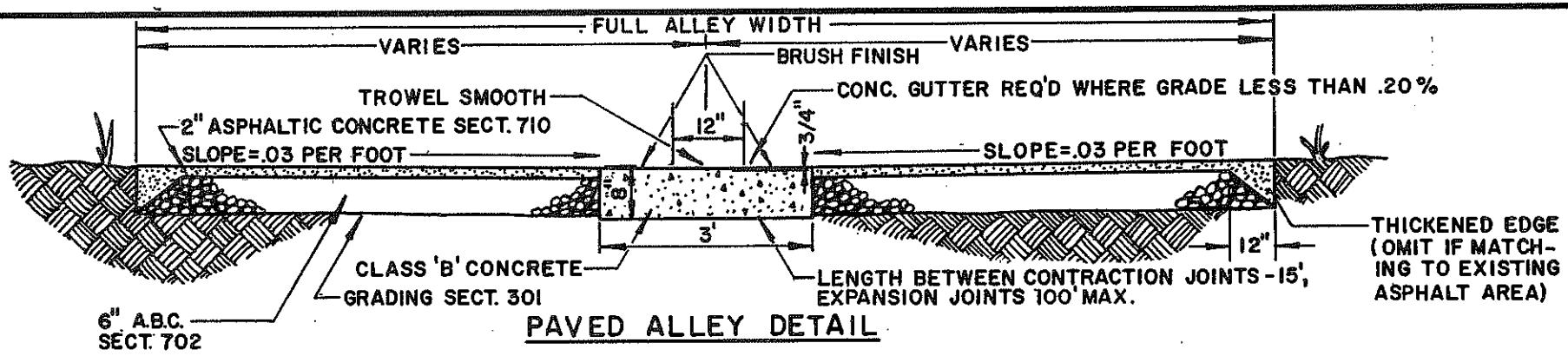

PAVED ALLEY DETAIL

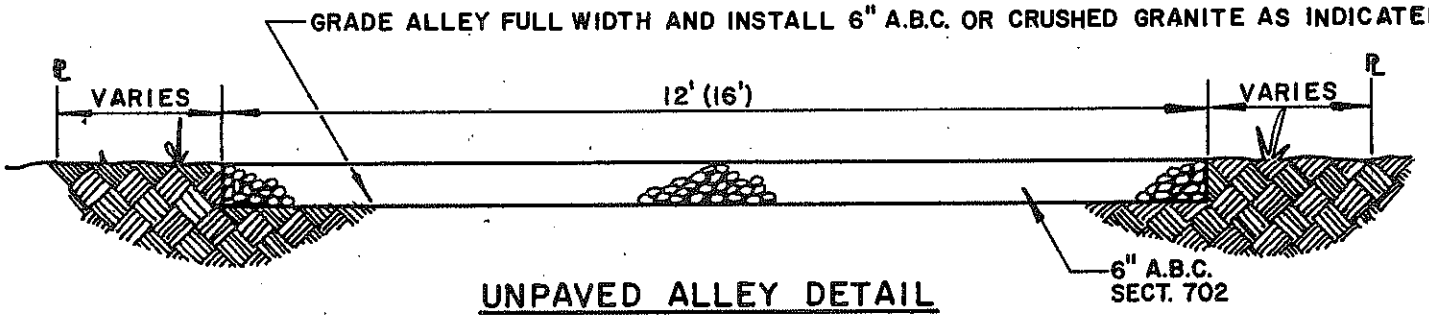

UNPAVED ALLEY DETAIL

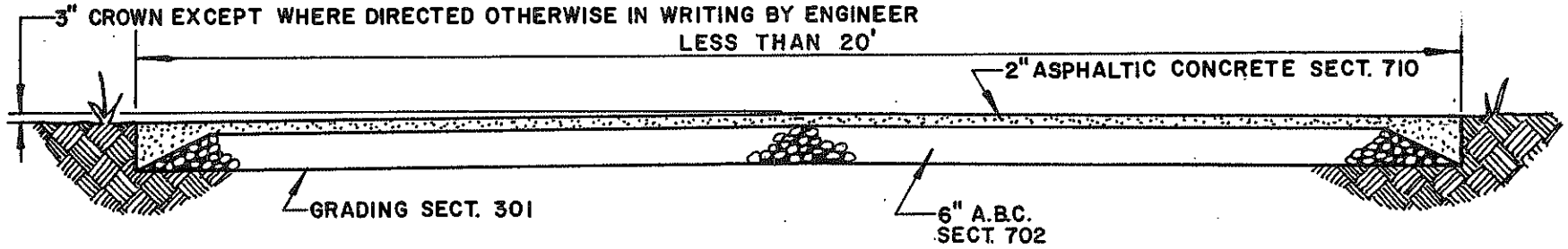

RESIDENTIAL ALLEY DETAIL

DETAIL NO. 202	MARICOPA ASSOCIATION of GOVERNMENTS STANDARD DETAIL	ALLEY DETAILS (PAVED & UNPAVED)	DETAIL NO. 202

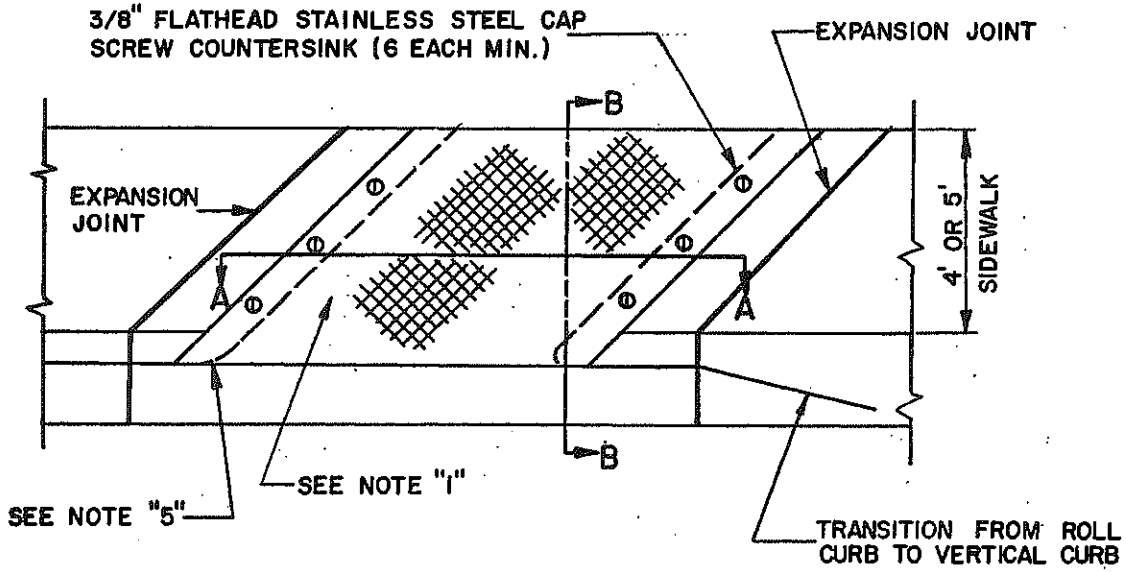

NOTES

1. ANGLE EQUALS 45° UNLESS SPECIFIED ON PLAN.
2. DIMENSION 'B' EQUALS A+2'
3. (⟶) INDICATES DIRECTION OF FLOW
4. PAINT STEEL ACCORDING TO SECT. 790. PAINT NUMBER 1-A OR 1-B.
5. R EQUALS 1" UNLESS OTHERWISE DIRECTED.
6. H EQUALS CURB FACE HEIGHT.
7. FOR ROLL CURB AND GUTTER, USE 2' TRANSITIONS TO VERTICAL CURB.

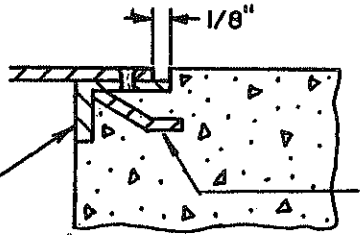

DETAIL C

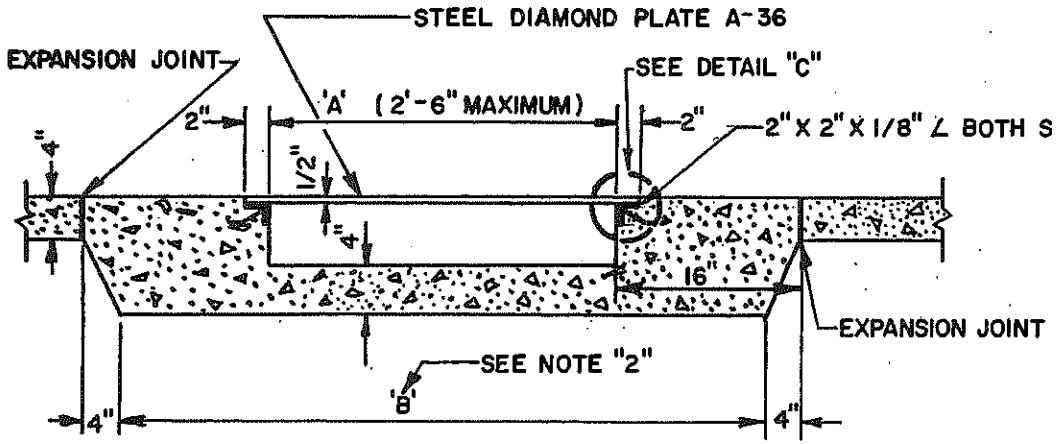

SECTION 'A-A'

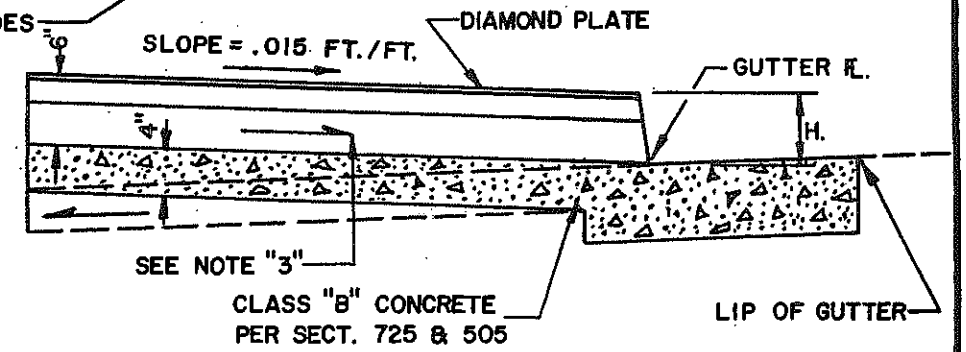

SECTION 'B-B'

DETAIL NO. 203	MARICOPA ASSOCIATION of GOVERNMENTS STANDARD DETAIL	SCUPPER		DETAIL NO. 203

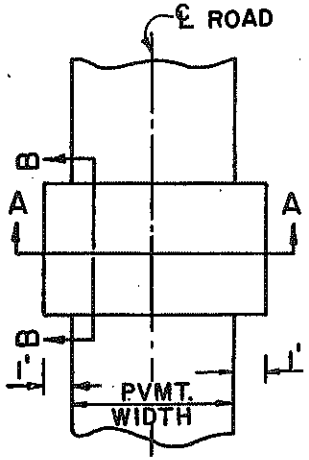

PLAN OF CONCRETE EQUIPMENT CROSSING

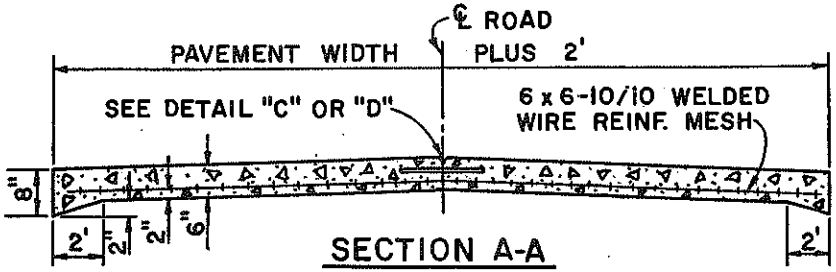

SECTION A-A

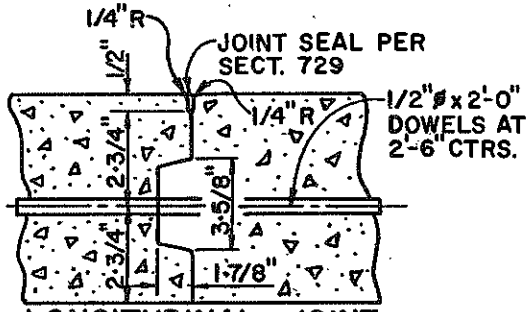

LONGITUDINAL JOINT DETAIL "C"

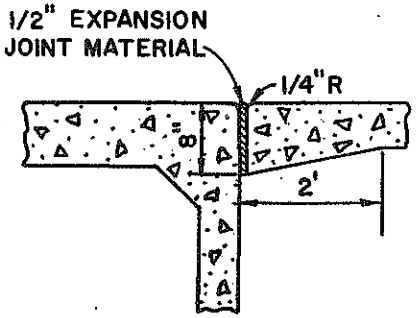

JOINT AT EXISTING BRIDGE DETAIL "E"

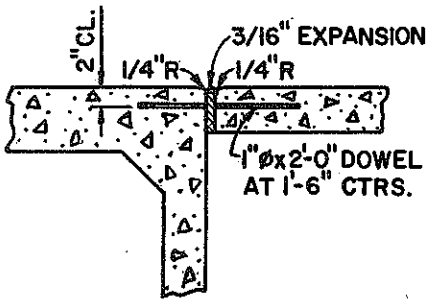

JOINT AT NEW BRIDGE DETAIL "F"

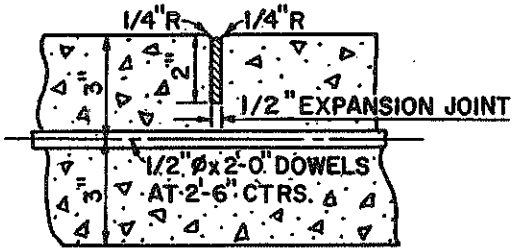

LONGITUDINAL JOINT DETAIL "D"

NOTES:

1. WHEN EQUIPMENT CROSSING LIES ADJACENT TO BRIDGE OR BOX CULVERT, CONSTRUCT THE EQUIPMENT CROSSING TO WIDTH OF BRIDGE ROADWAY.
2. ALL DOWELS IN CENTER JOINTS SHALL BE DEFORMED BARS AND SHALL HAVE UNBROKEN BOND. THEY SHALL BE HELD SECURELY IN PLACE, PARALLEL TO THE SUBGRADE & PERPENDICULAR TO THE CENTERLINE OF THE ROAD.
3. THE EDGING TOOL USED FOR ALL LONGITUDINAL JOINTS SHALL BE SO CONSTRUCTED AS TO PROVIDE A SMOOTH TROWELED SURFACE 3" WIDE ON EACH SIDE OF THE JOINT.
4. IF APPROVED BY THE ENGINEER, OTHER DEFORMATIONS MAY BE USED IN LONGITUDINAL JOINT - DETAIL "C".
5. DETAIL "C" TO BE USED ONLY WHEN FULL WIDTH CAN NOT BE POURED IN ONE POUR. USE DETAIL "D" IF FULL WIDTH IS POURED IN ONE POUR.

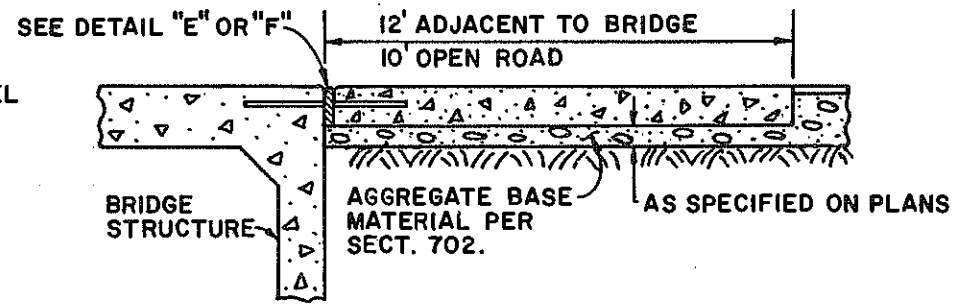

SECTION B-B

DETAIL NO. 204	MARICOPA ASSOCIATION of GOVERNMENTS STANDARD DETAIL	EQUIPMENT CROSSING		DETAIL NO. 204

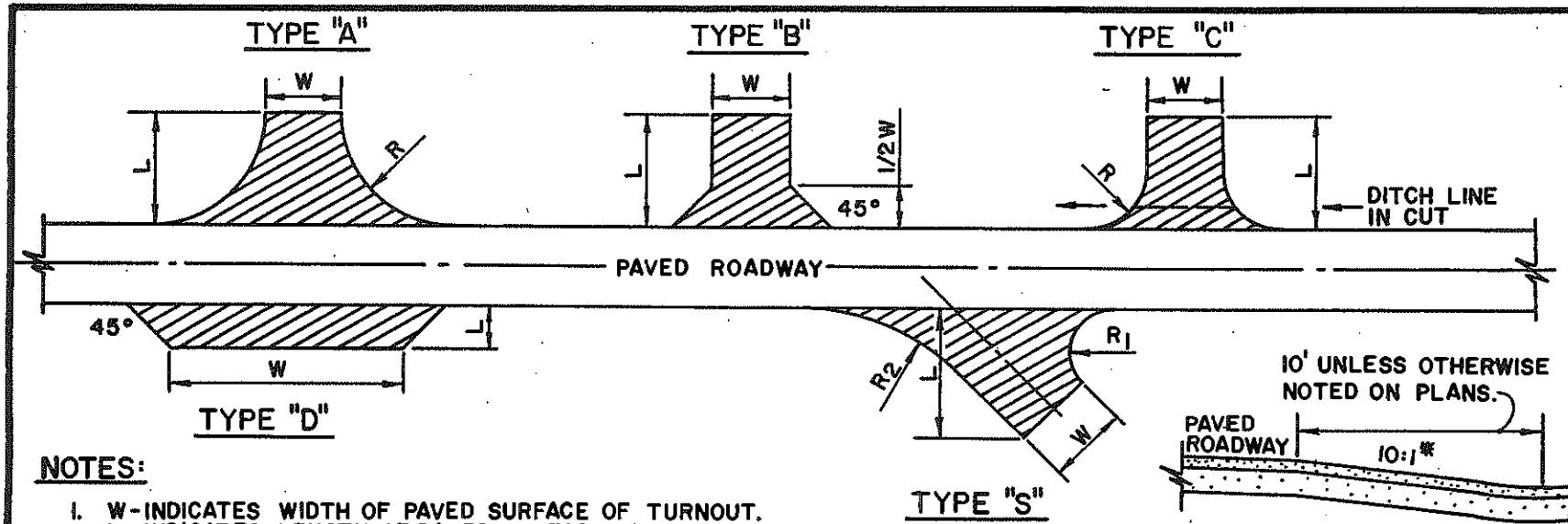

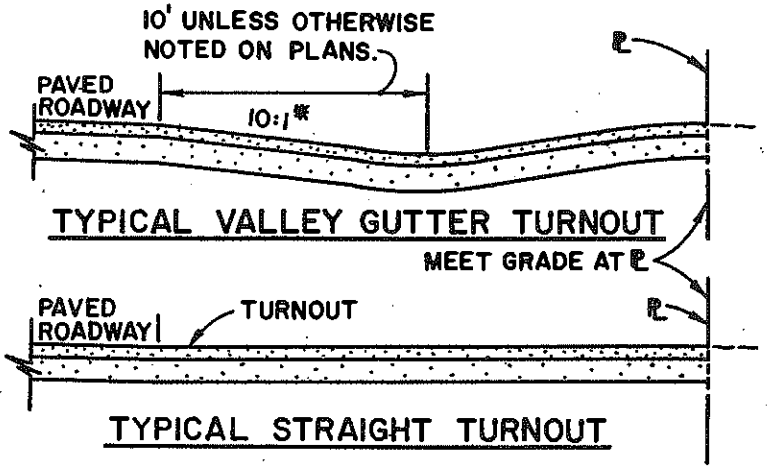

NOTES:

1. W - INDICATES WIDTH OF PAVED SURFACE OF TURNOUT.
   L - INDICATES LENGTH OF PAVED SURFACE OF TURNOUT.
   R - RADIUS.
2. SIZE & TYPE OF TURNOUT SHALL BE NOTED ON PLANS AS FOLLOWS:
   90°-NO RADIUS: W x L-SURFACE-TYPE; (12'x30'-A.C.-TYPE "B" TURNOUT).
   90°-WITH A RADIUS: W x L x R-SURFACE-TYPE; (12'x30'x15'-A.C.-TYPE "C" TURNOUT).
   OTHER THAN 90° WITH 2 RADII-TYPE "S": W x L x R_1 x R_2-SURFACE-TYPE;
   (12'x30'x15'x50'-AC.-TYPE "S" TURNOUT).
   OR IT MAY BE NOTED ON PLANS IN CONVENTIONAL TERMS.
3. TURNOUTS TO BE STRAIGHT TYPE UNLESS OTHERWISE NOTED ON PLANS.
4. A.C. AND BASE MATERIAL THICKNESS FOR TURNOUTS SHALL BE THE SAME AS SHOWN ON THE ROADWAY SECTION, UNLESS OTHERWISE NOTED.
5. ANY EXCAVATION OR EMBANKMENT FOR TURNOUTS IS INCLUDED IN THE ROADWAY QUANTITIES.
6. TURNOUTS ARE TO BE PLACED WHERE SHOWN ON PLANS, OR AS DIRECTED BY THE ENGINEER.

*UNLESS OTHERWISE NOTED ON PLANS

DETAIL NO. 205	MARICOPA ASSOCIATION of GOVERNMENTS STANDARD DETAIL	PAVED TURNOUTS		DETAIL NO. 205

REVISED 1986

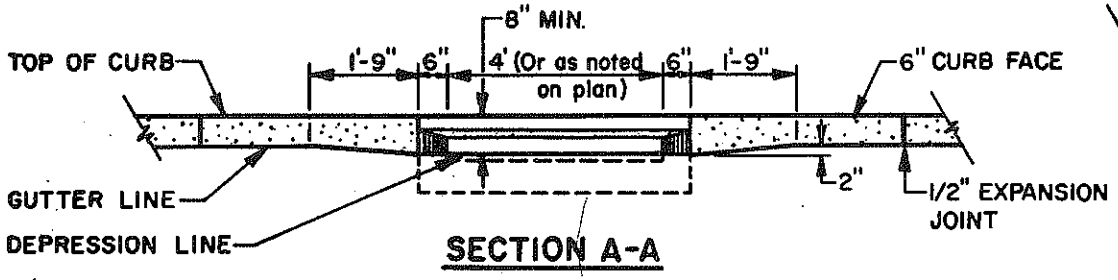

SECTION A-A

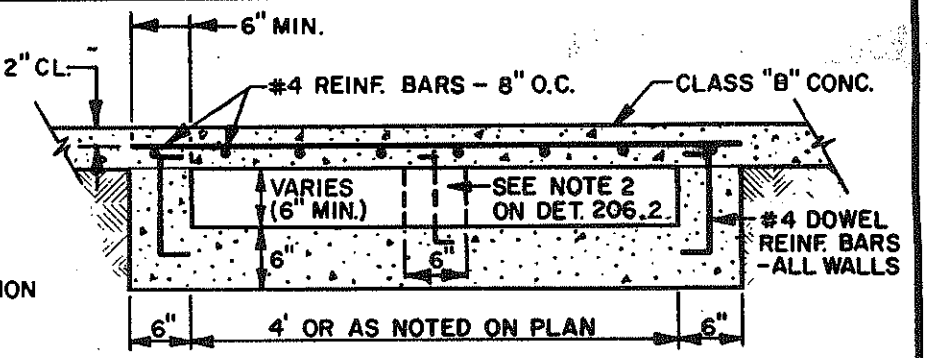

SECTION B-B

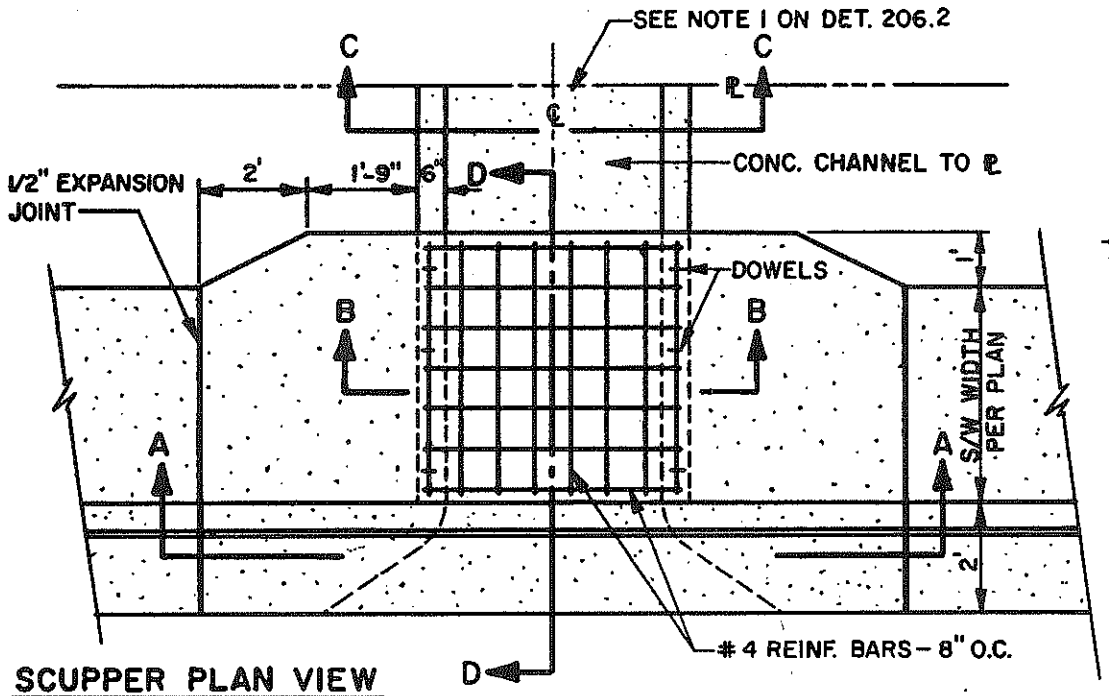

SCUPPER PLAN VIEW

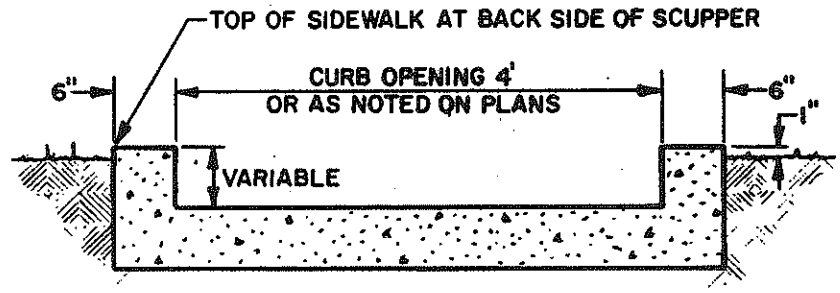

SECTION C-C
SPILLWAY

DETAIL NO. 206.1	MARICOPA ASSOCIATION of GOVERNMENTS STANDARD DETAIL	CONCRETE SCUPPER		DETAIL NO. 206.1

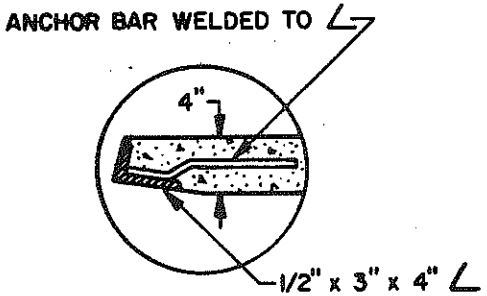

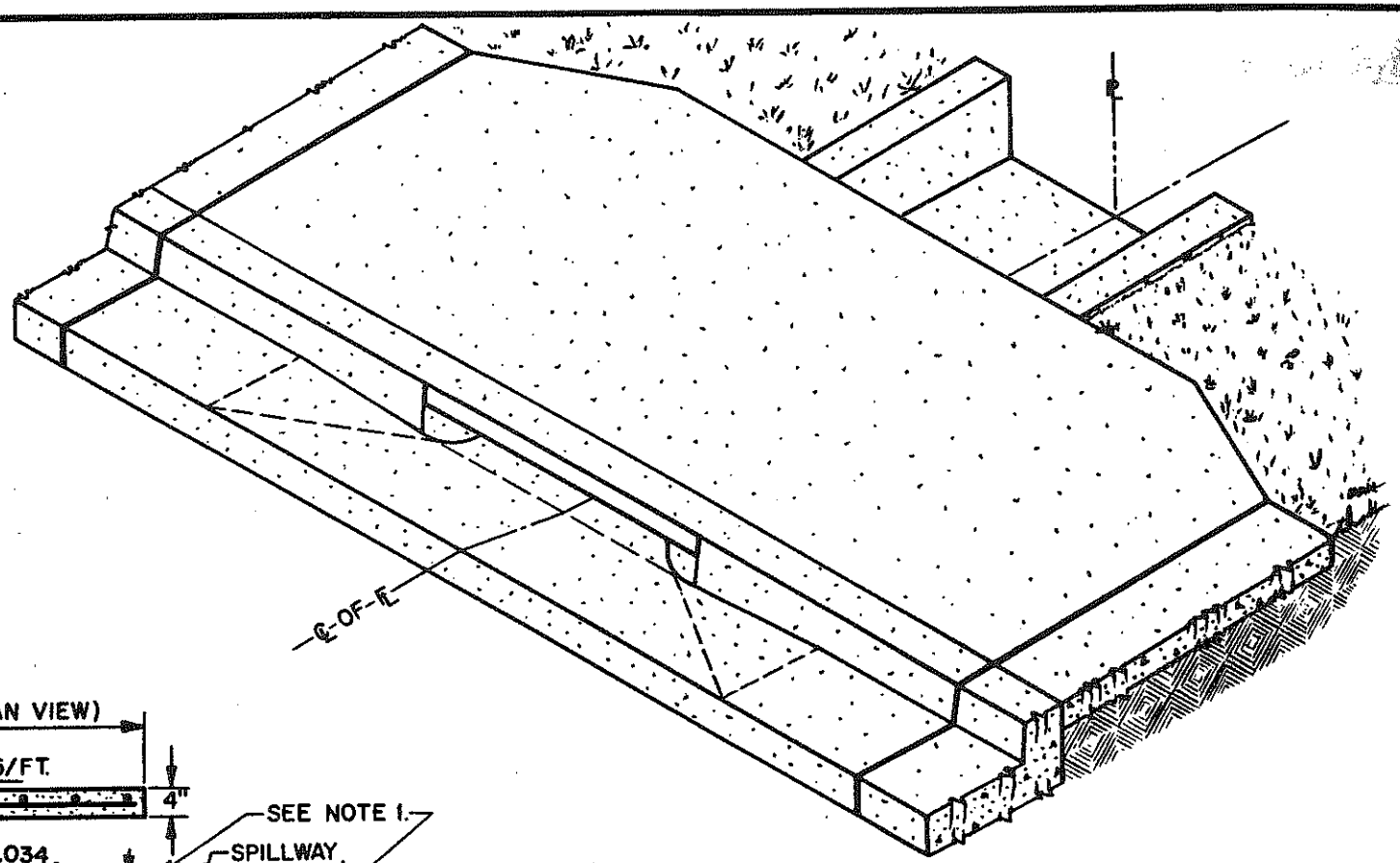

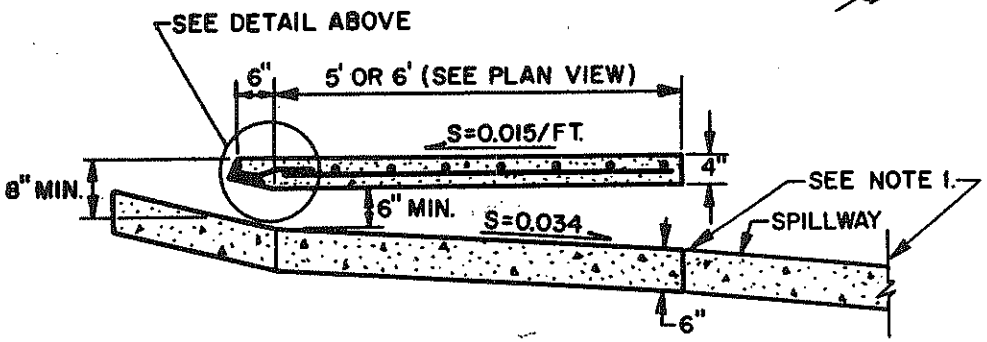

SECTION D-D

NOTES

1. TRANSITION TO SPILLWAY/ CHANNEL AS PER APPROVED PLANS.
2. A CENTER WALL SHALL BE INSTALLED IN SCUPPERS WIDER THAN 4' OR IF MORE THAN 1 SCUPPER IS BUILT IN SERIES.
3. EXPANSION JOINT FILLER SHALL BE 1/2" BITUMINOUS TYPE PREFORMED EXPANSION JOINT FILLER, A.S.T.M. D-1751.

DETAIL NO. 206.2	MARICOPA ASSOCIATION of GOVERNMENTS STANDARD DETAIL	CONCRETE SCUPPER		DETAIL NO. 206.2

RIBBON CURB
(TYPE B)

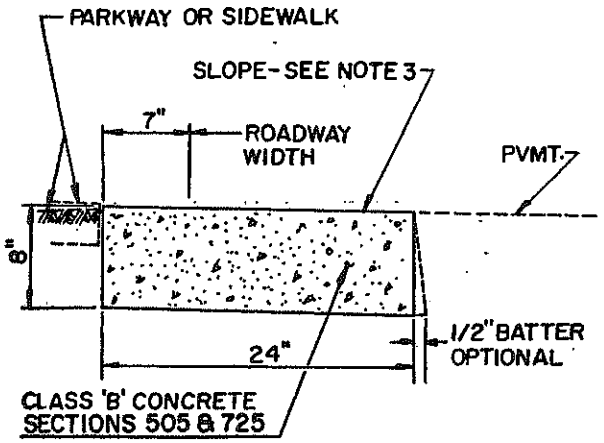

NOTES

1. CONSTRUCT CURB AND INSTALL 1/2" MASTIC EXPANSION JTS., A.S.T.M. D-1751. SECT. 340.
2. BROOM FINISH ALL SURFACES.
3. RIBBON CURB MAY SLOPE TOWARDS PAVEMENT OR PARKWAY AS INDICATED ON PLANS.
4. CONTRACTION JOINT SPACING 10' MAX.

VERTICAL CURB & GUTTER
(TYPE A)

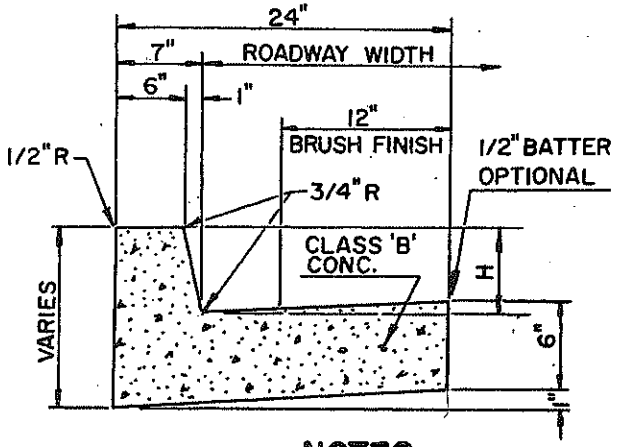

NOTES

1. ALL EXPOSED SURFACES TO BE TROWEL FINISHED EXCEPT AS SHOWN. SEE SECTION 340.
2. H=6" OR AS SPECIFIED ON PLANS.
3. CONTRACTION JOINT SPACING 10' MAX.
4. EXPANSION JOINTS AS PER STD. SECT. 340

ROLL TYPE CURB & GUTTER
(TYPE C)

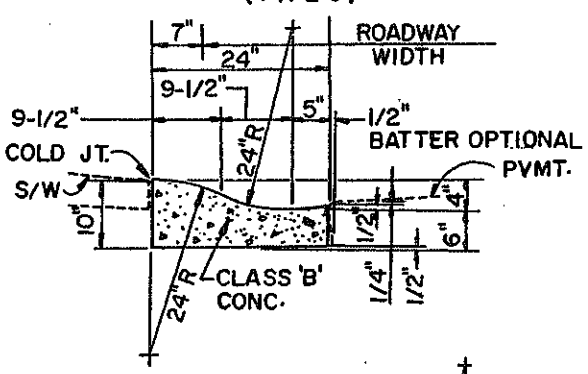

(TYPE D)

SPECIAL SECT. USE FOR HIGH SIDE CURB WITH SHEET DRAINAGE ACROSS STREET.

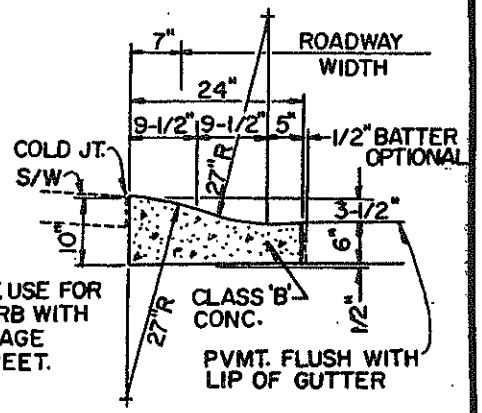

NOTES

1. ALL WORK AND MATERIALS SHALL CONFORM TO SECT. 340, 505, 725 BROOM FINISH EXPOSED SURFACE.
2. CONTRACTION JOINT SPACING 10' MAX.
3. EXPANSION JOINTS AS PER STD. SECT. 340

DETAIL NO. 220	MARICOPA ASSOCIATION of GOVERNMENTS STANDARD DETAIL	CURB AND GUTTER - TYPES A, B, C & D	DETAIL NO. 220

CURB & GUTTER TRANSITION

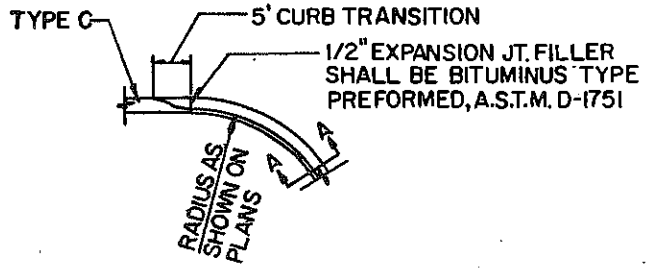

SECTION A-A

NOTES

1. THE CURB TRANSITION WILL BE PAID FOR AS TYPE C. WHEN A PROJECT CONSISTS OF TYPE C. CURB & GUTTER THROUGHOUT, THE ENTIRE RETURN SHALL BE MEASURED AND PAID FOR AS TYPE A.

2. WHERE PROPOSED CONSTRUCTION IS TO BE CONNECTED TO EXISTING C.& G., THE TRANSITION SHALL BE AS INDICATED ON PLANS.

INTEGRAL ROLL CURB, GUTTER & SIDEWALK

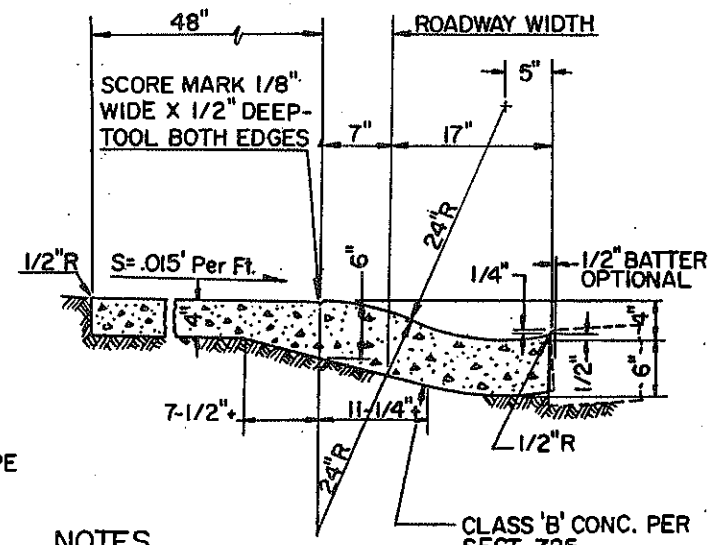

NOTES

1. CONCRETE TO BE MONOLITHIC POUR. EXPOSED SURFACE FINISH AS PER SIDEWALK AND GUTTER DETAIL.

2. CONTRACTION JOINT SPACING 16' MAXIMUM.

3. EXPANSION JOINTS PER SECT. 340.

CURB WARNING BEACON

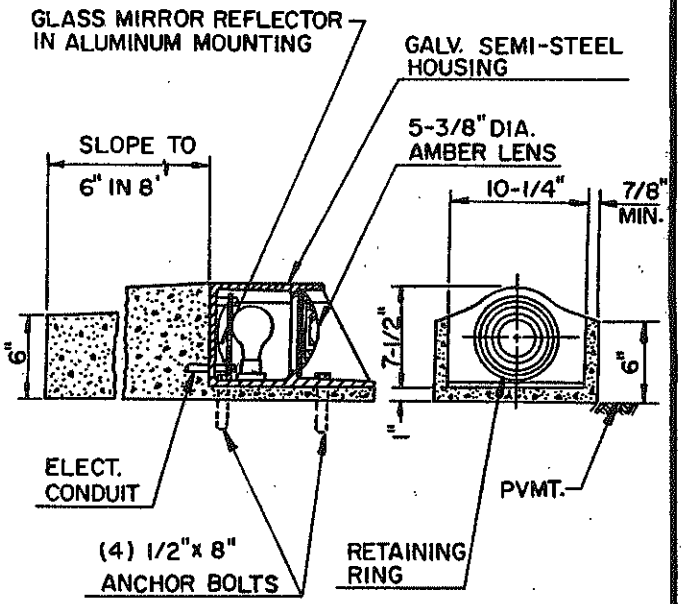

DETAIL NO. 221	MARICOPA ASSOCIATION of GOVERNMENTS STANDARD DETAIL	CURB AND GUTTER (TRANSITION, INTEGRAL & WARNING BEACON)	DETAIL NO. 221

NOTES

1. ALL VERTICAL SURFACES TO BE FORMED
2. VERTICAL SURFACES DOWN FROM 2" BELOW UNDISTURBED SOIL MAY BE PLACED AGAINST NEAT CUT IF APPROVED BY THE ENGINEER AND CONCRETE WILL NOT EXTEND MORE THAN 1" BEYOND THEORETICAL FACE
3. ALL EXPOSED SURFACES TO BE STRIPPED GREEN AND TROWEL FINISHED
4. CONCRETE CURBS CONFORM TO SECTION 340
5. MAXIMUM SPACING OF CONTRACTION JOINTS IS 10'
6. CONCRETE TO BE CLASS "B" PER SECT. 725.

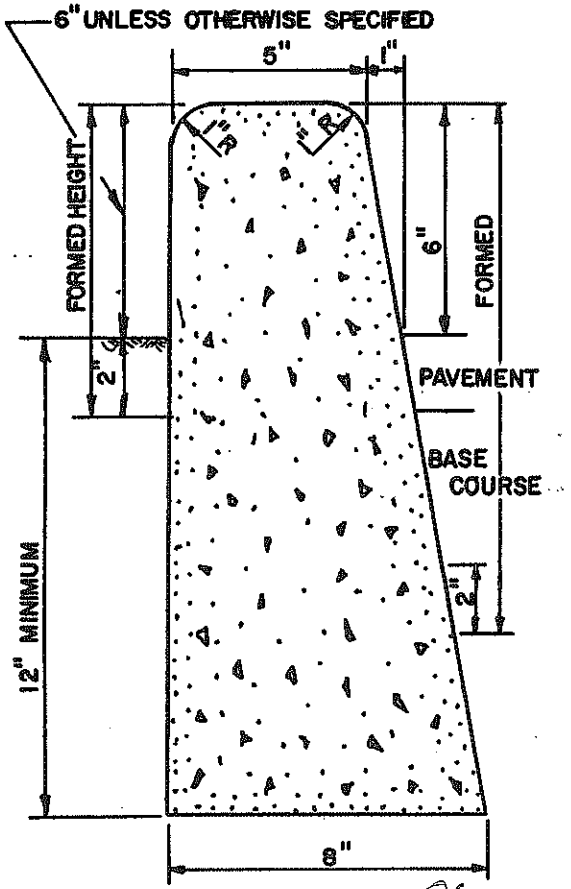

TYPE "A"

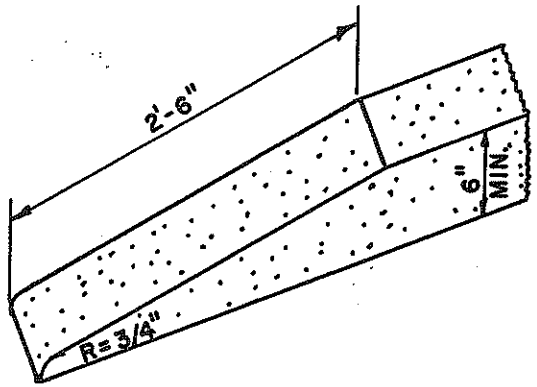

TYPICAL CURB TERMINATION

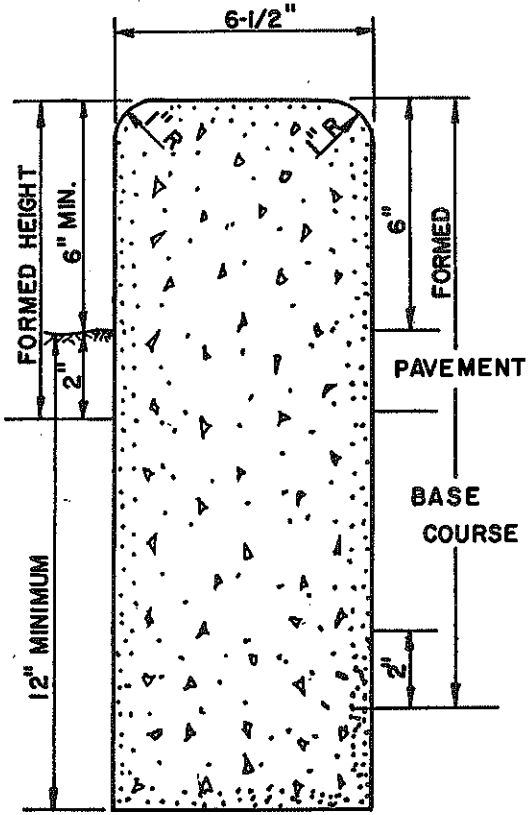

TYPE "B"

DETAIL NO. 222	MARICOPA ASSOCIATION of GOVERNMENTS STANDARD DETAIL	SINGLE CURB - TYPES A, B & TERMINATION		DETAIL NO. 222

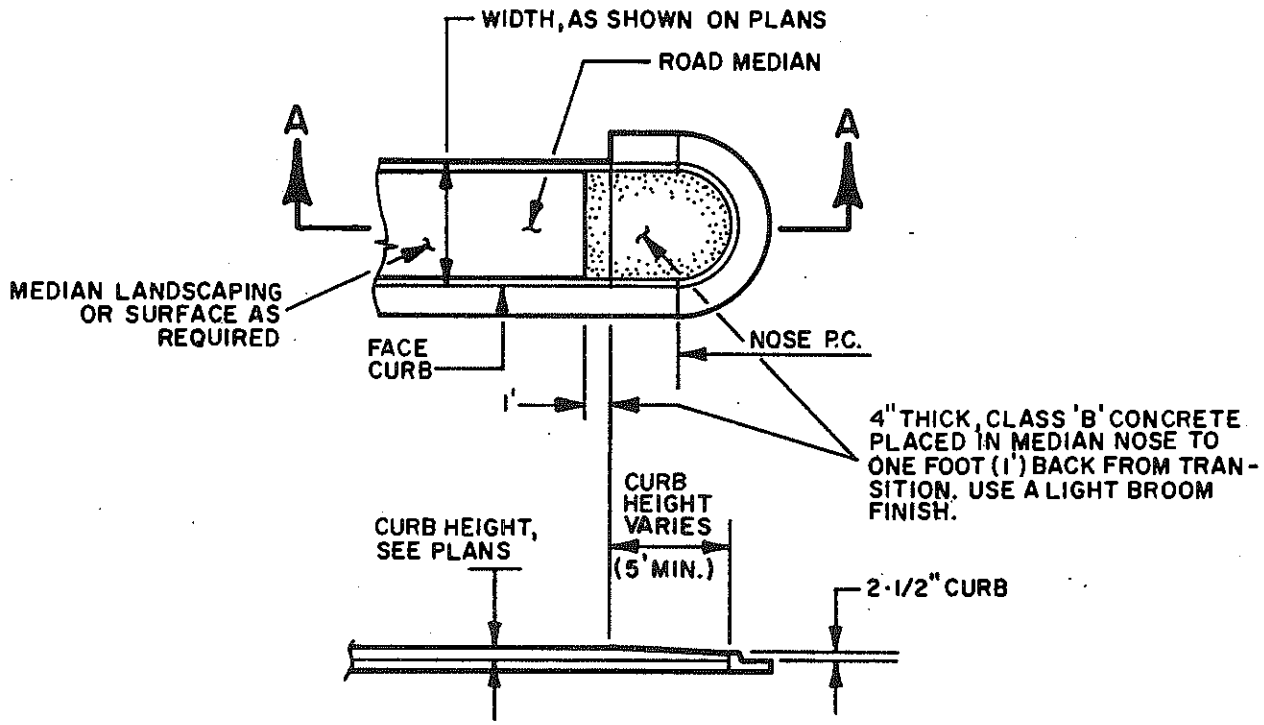

SECTION A-A

NOTE: LENGTH OF TRANSITION SHALL BE EQUAL TO RADIUS OF MEDIAN NOSE, (5' MIN.) FOR LOCATION SEE PLANS.

DETAIL NO. 223	MARICOPA ASSOCIATION of GOVERNMENTS STANDARD DETAIL	MEDIAN NOSE TRANSITION		DETAIL NO. 223

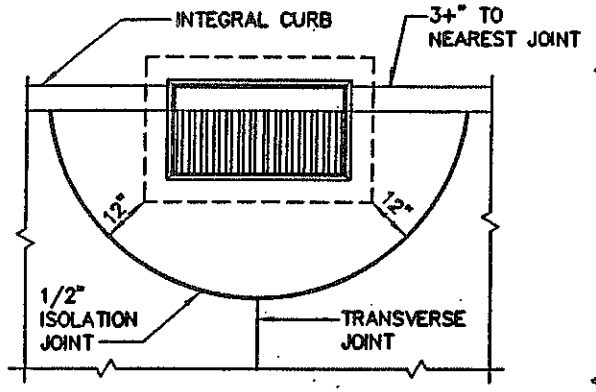

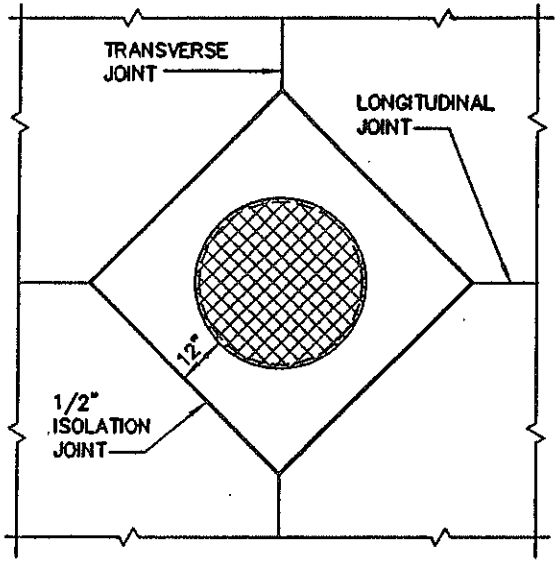

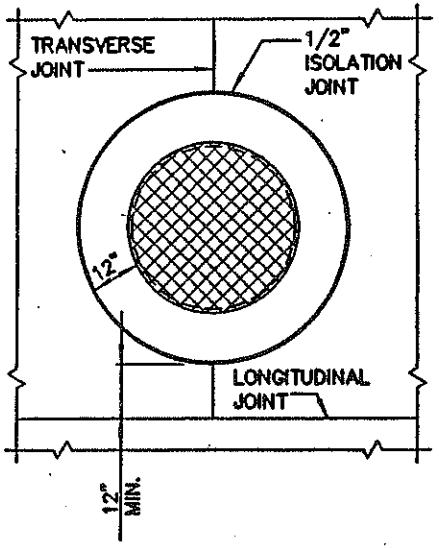

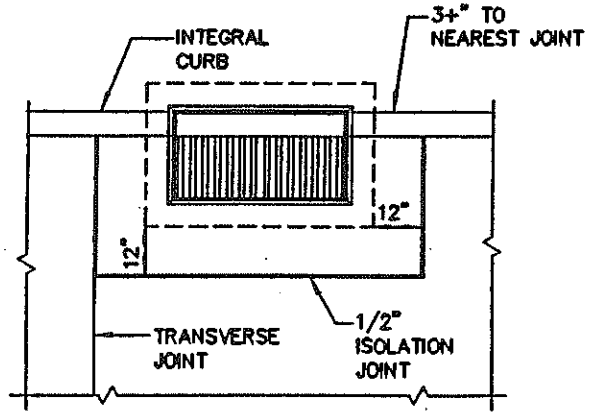

DRAINAGE INLET

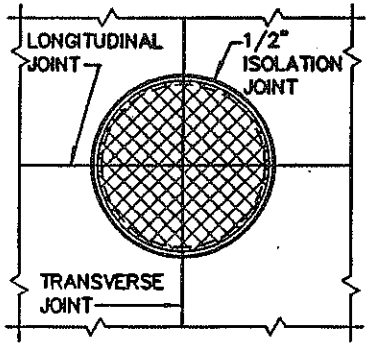

MANHOLE COVERS

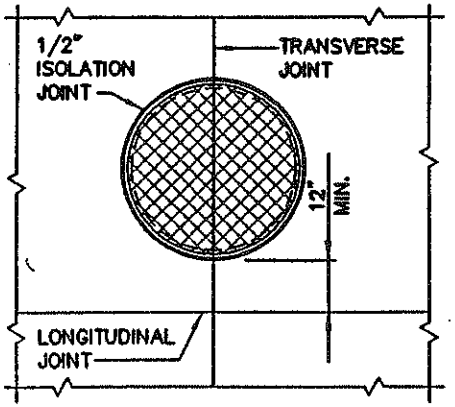

MANHOLE COVERS

DETAIL NO. 224	MARICOPA ASSOCIATION of GOVERNMENTS STANDARD DETAIL	JOINT FOR DRAINAGE INLETS AND MANHOLE COVERS		DETAIL NO. 224

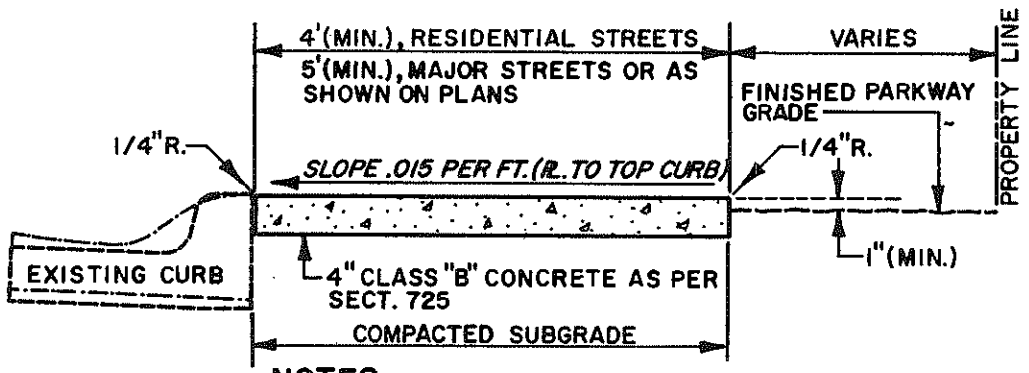

NOTES

1. SIDEWALK CONSTRUCTION SHALL CONFORM TO SECT. 340.
2. EXPANSION JOINT FILLER SHALL BE 1/2" BITUMINOUS TYPE PREFORMED EXPANSION JOINT FILLER, A.S.T.M. D-1751.
3. LARGE AGGREGATE, IN CONTRACTION JOINT, SHALL BE SEPARATED TO A DEPTH OF 1" FINISH DEPTH SHALL BE A MIN. OF 3/4".
4. EXPANSION JOINT 100' MAX. SPACING PER SECT. 340.

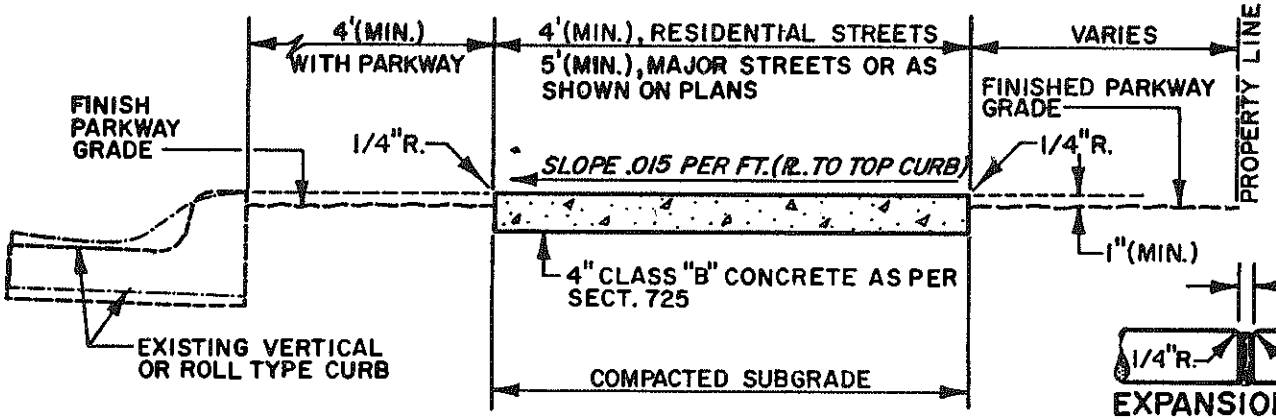

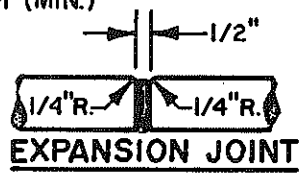

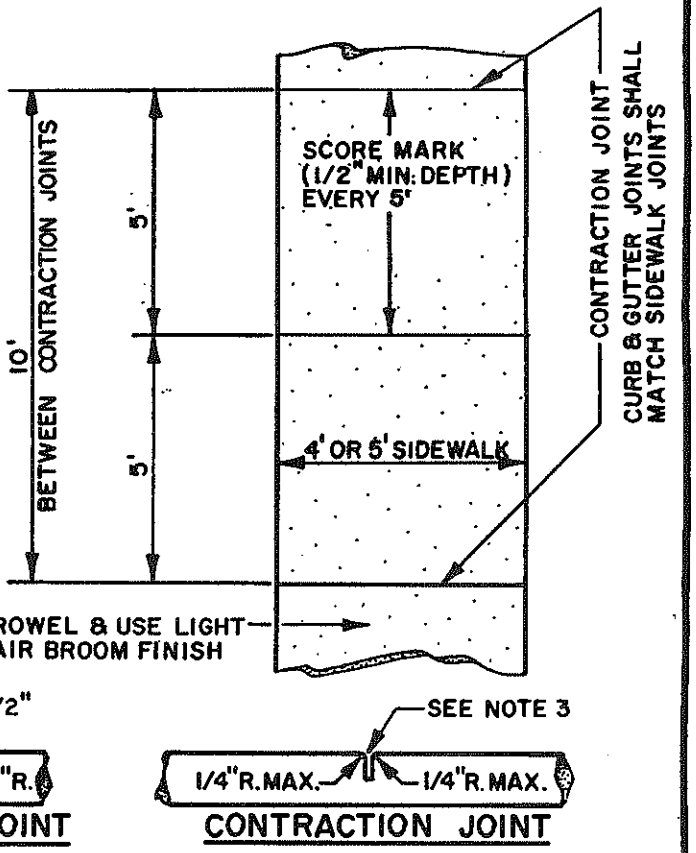

DETAIL NO. 230	MARICOPA ASSOCIATION of GOVERNMENTS STANDARD DETAIL	SIDEWALKS		DETAIL NO. 230

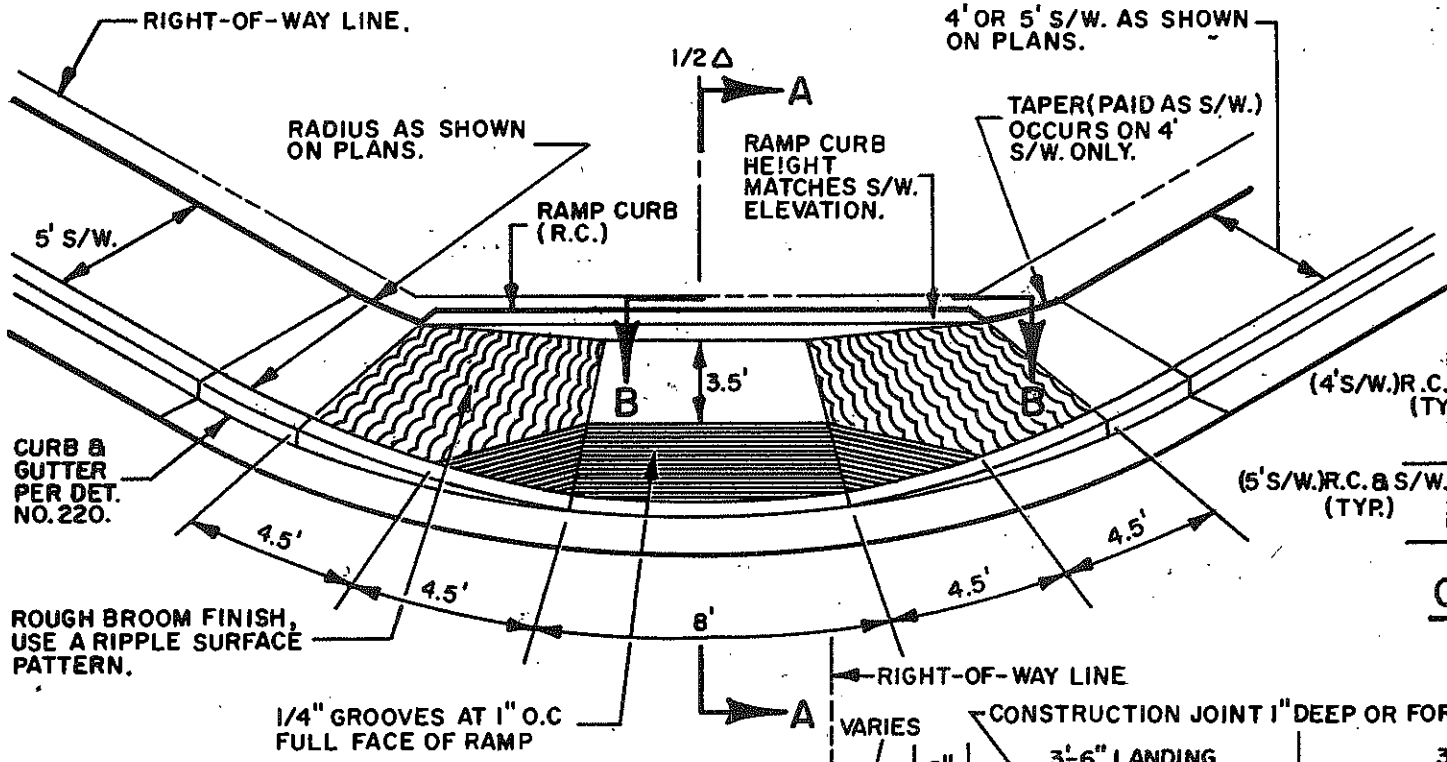

NOTES

1. CONTROL ELEVATIONS SHOWN ARE IN RELATION TO THE GUTTER AND ARE LOCATED RADIALLY. GUTTER ELEV.=0.
2. CLASS 'B' CONC. CONSTRUCTION AS PER SECT. 725.
3. WHEN CURB HEIGHTS OF 7" ARE SHOWN ON PLANS, USE DIMENSIONS SHOWN IN [ ]'S.

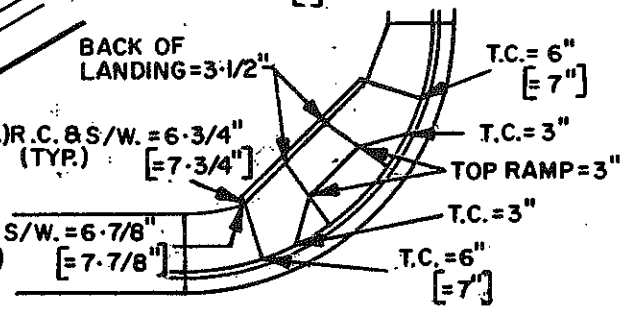

CONTROL ELEVATIONS

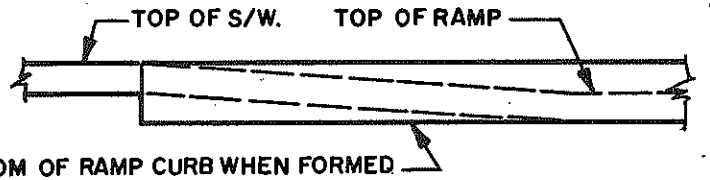

SECTION B-B

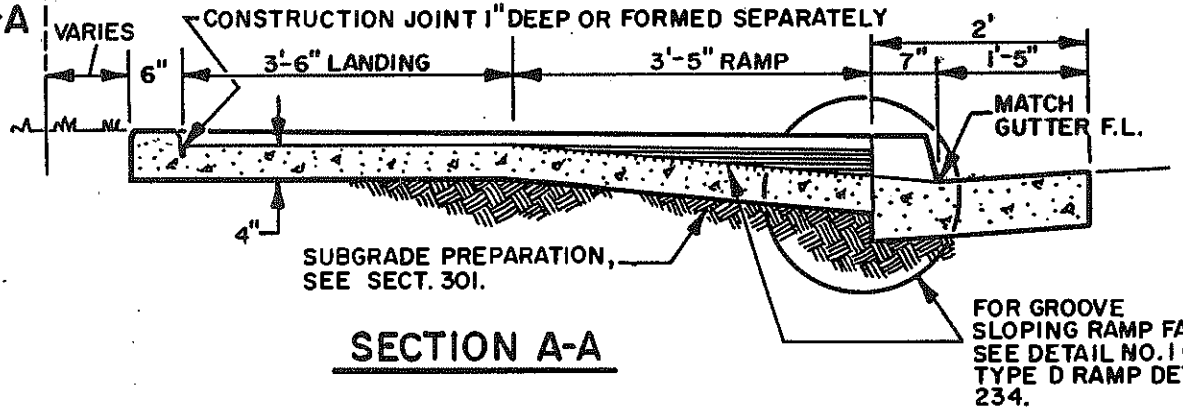

SECTION A-A

DETAIL NO. 231	MARICOPA ASSOCIATION of GOVERNMENTS STANDARD DETAIL	SIDEWALK RAMPS- TYPE A	DETAIL NO. 231

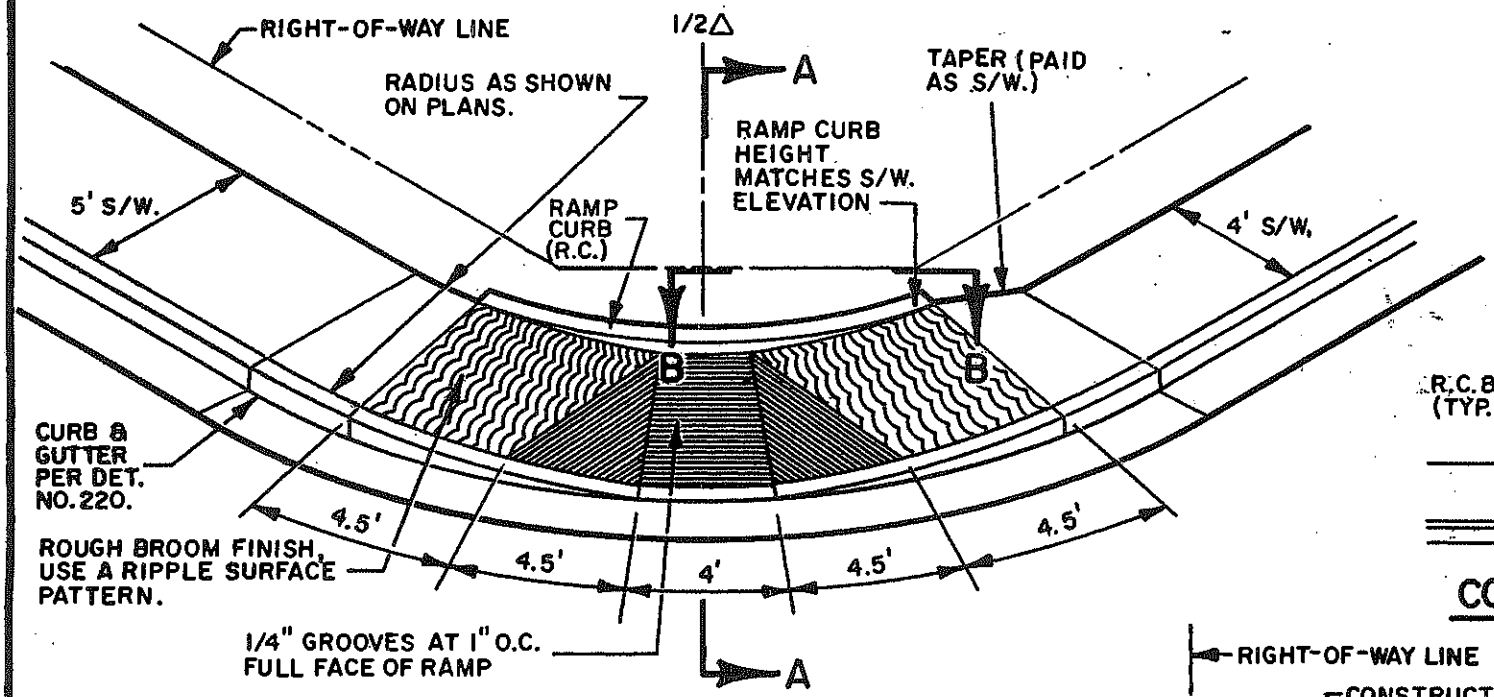

NOTES

1. CONTROL ELEVATIONS SHOWN ARE IN RELATION TO THE GUTTER AND ARE LOCATED RADIALLY. GUTTER ELEV.= 0.
2. CLASS 'B' CONC. CONSTRUCTION AS PER SECT. 725.
3. WHEN CURB HEIGHTS OF 7" ARE SHOWN ON PLANS, USE DIMENSIONS SHOWN IN [ ]'S.

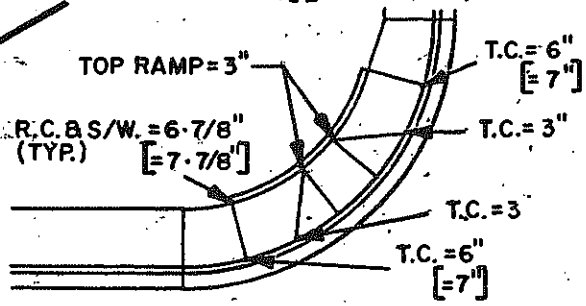

CONTROL ELEVATIONS

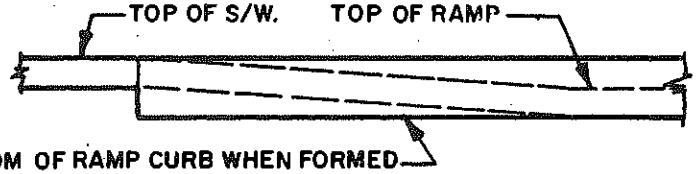

SECTION B-B

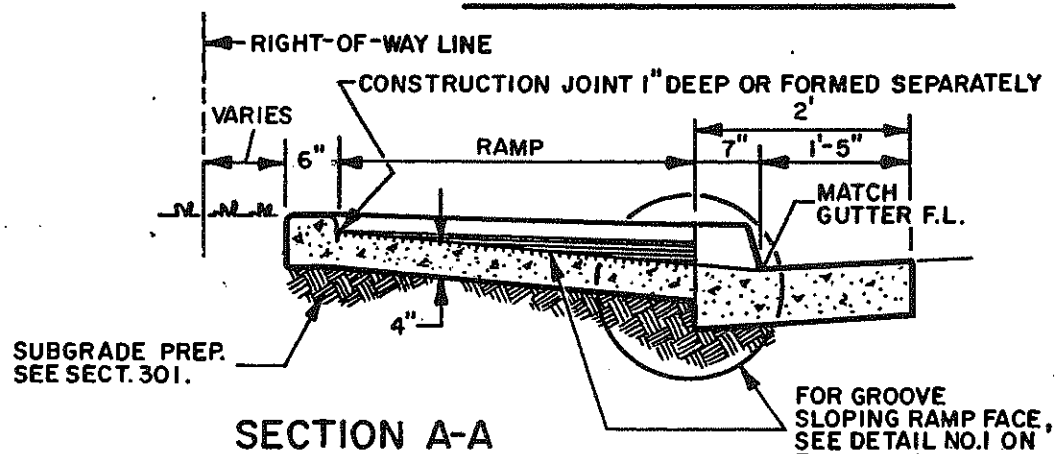

SECTION A-A

DETAIL NO. 232	MARICOPA ASSOCIATION of GOVERNMENTS STANDARD DETAIL	SIDEWALK RAMPS – TYPE B		DETAIL NO. 232

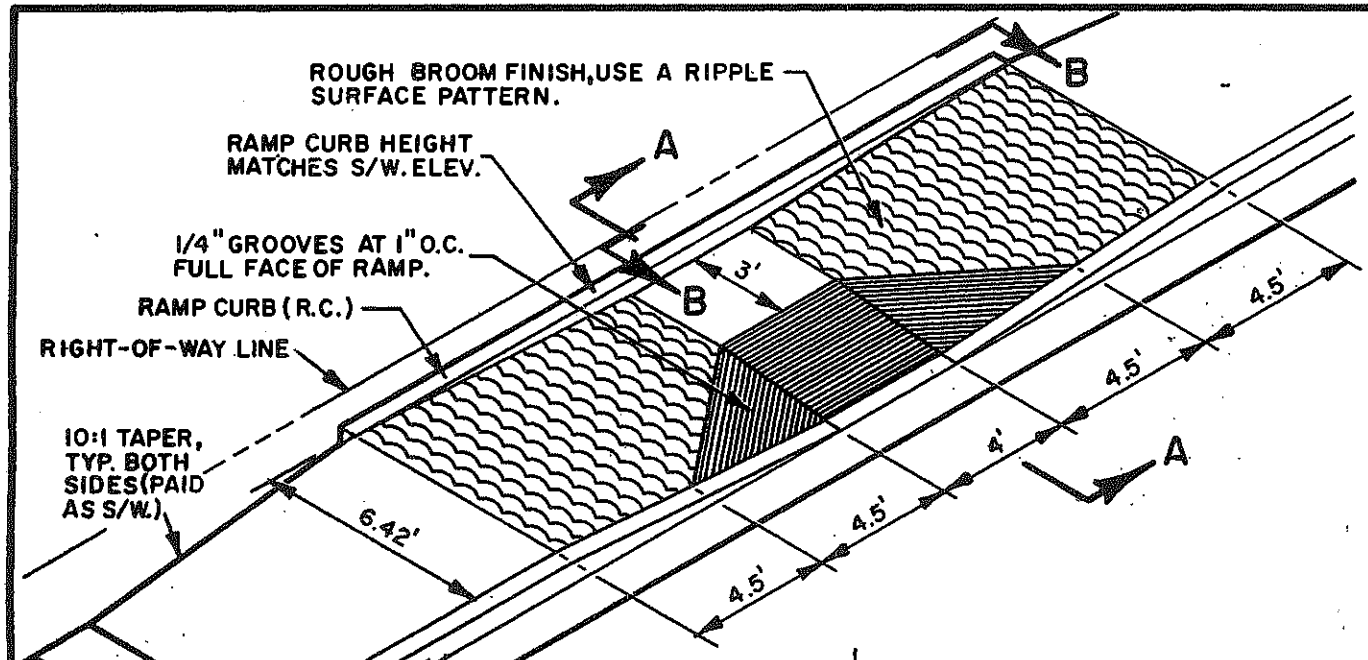

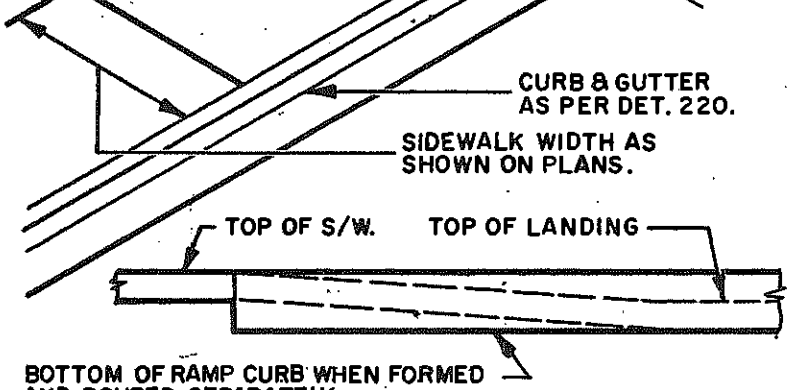

SECTION B-B

NOTES

1. CONTROL ELEVATIONS SHOWN ARE IN RELATION TO THE GUTTER. GUTTER ELEVATION = 0.
2. CLASS 'B' CONC. CONSTRUCTION AS PER SECT. 725.
3. WHEN CURB HEIGHTS OF 7" ARE SHOWN ON PLANS, USE DIMENSIONS SHOWN IN [ ]'S.

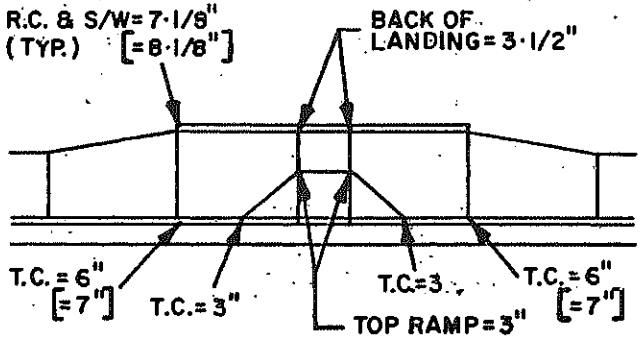

CONTROL ELEVATIONS

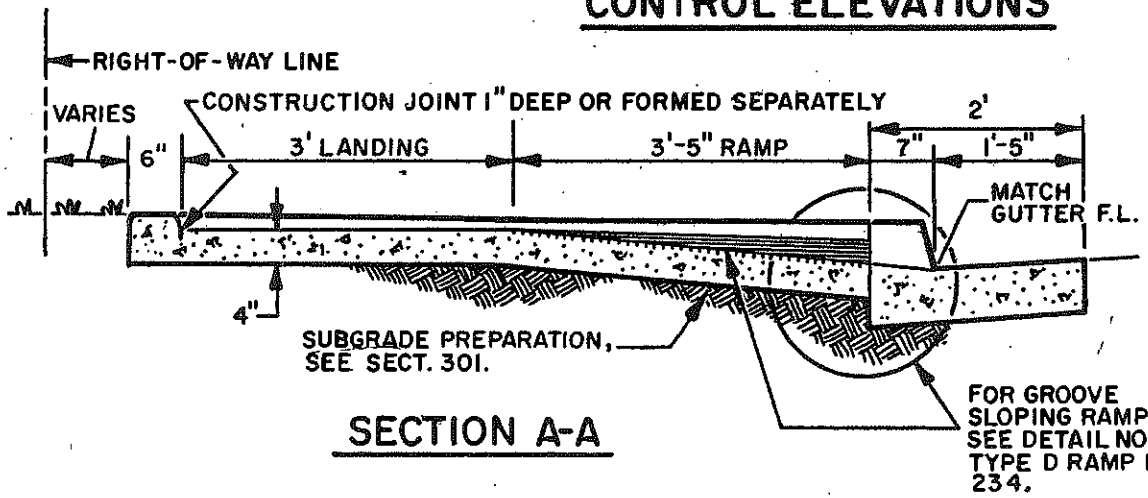

SECTION A-A

DETAIL NO. 233	MARICOPA ASSOCIATION of GOVERNMENTS STANDARD DETAIL	SIDEWALK RAMPS- TYPE C		DETAIL NO. 233

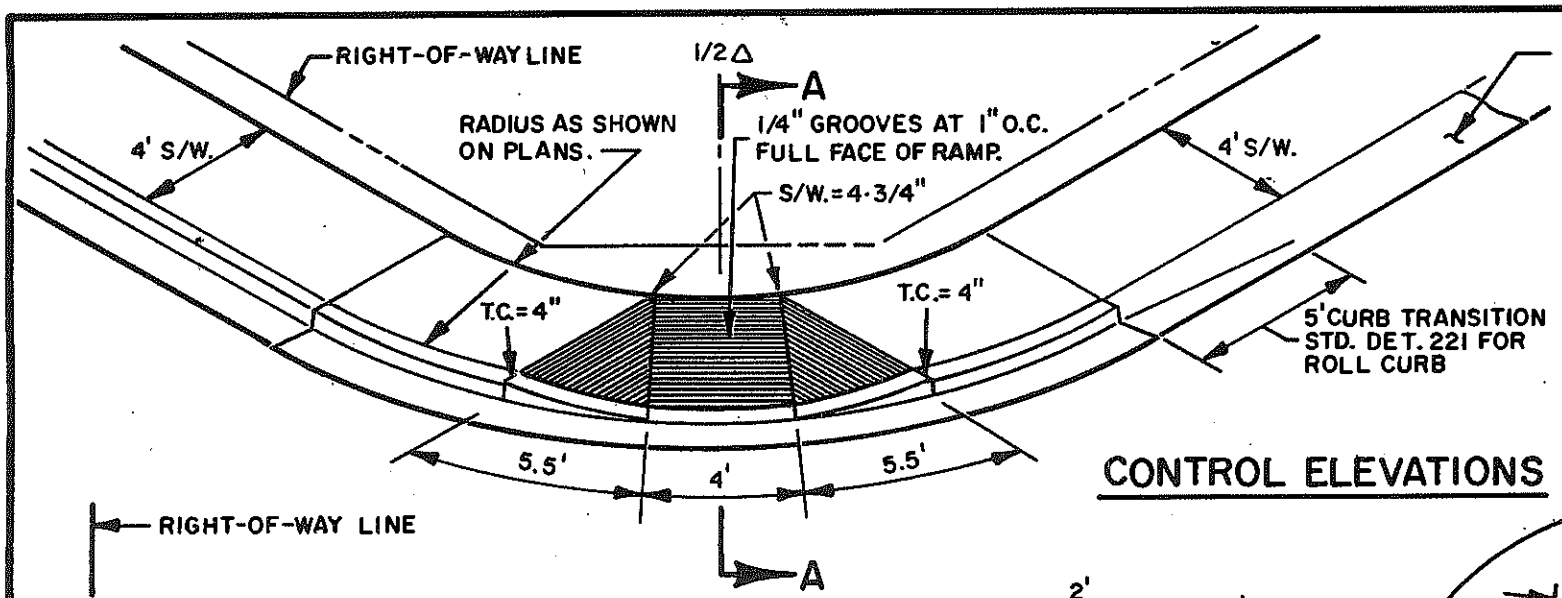

NOTES

1. CONTROL ELEVATIONS SHOWN ARE IN RELATION TO THE GUTTER AND ARE LOCATED RADIALLY. GUTTER ELEVATION = 0.
2. CLASS 'B' CONC. CONSTRUCTION AS PER SECT. 725.

CONTROL ELEVATIONS

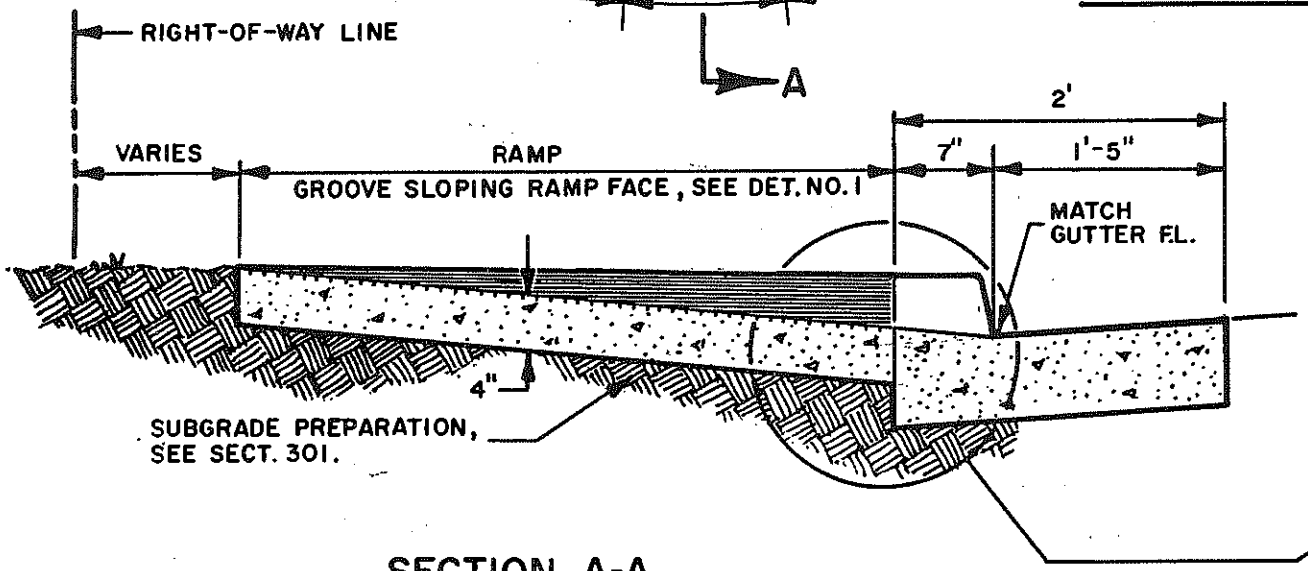

SECTION A-A

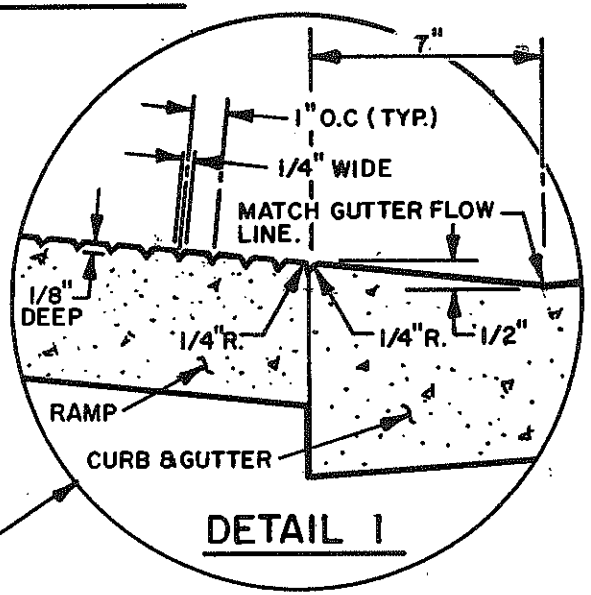

DETAIL 1

DETAIL NO. 234	MARICOPA ASSOCIATION of GOVERNMENTS STANDARD DETAIL	SIDEWALK RAMPS - TYPE D		DETAIL NO. 234

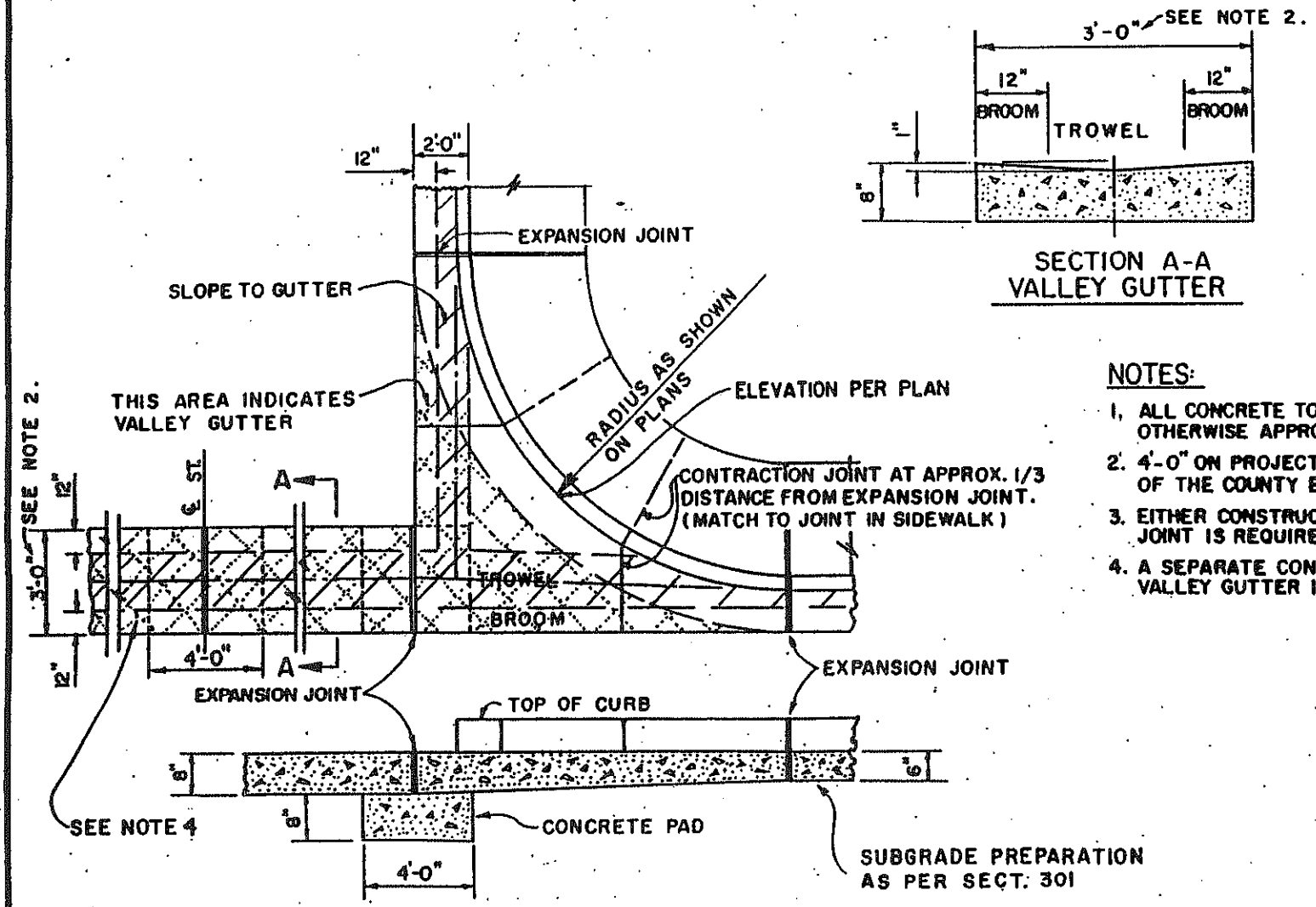

SECTION A-A
VALLEY GUTTER

NOTES:

1. ALL CONCRETE TO BE CLASS "A" UNLESS OTHERWISE APPROVED, (SECT. 725).
2. 4'-0" ON PROJECTS UNDER THE JURISDICTION OF THE COUNTY ENGINEER & THE CITY OF MESA.
3. EITHER CONSTRUCTION JOINT OR CONTRACTION JOINT IS REQUIRED AT ℄ OF STREET.
4. A SEPARATE CONCRETE PAD IS REQUIRED WHEN VALLEY GUTTER IS POURED HALF AT A TIME.

DETAIL NO. 240	MARICOPA ASSOCIATION of GOVERNMENTS STANDARD DETAIL	VALLEY GUTTER		DETAIL NO. 240

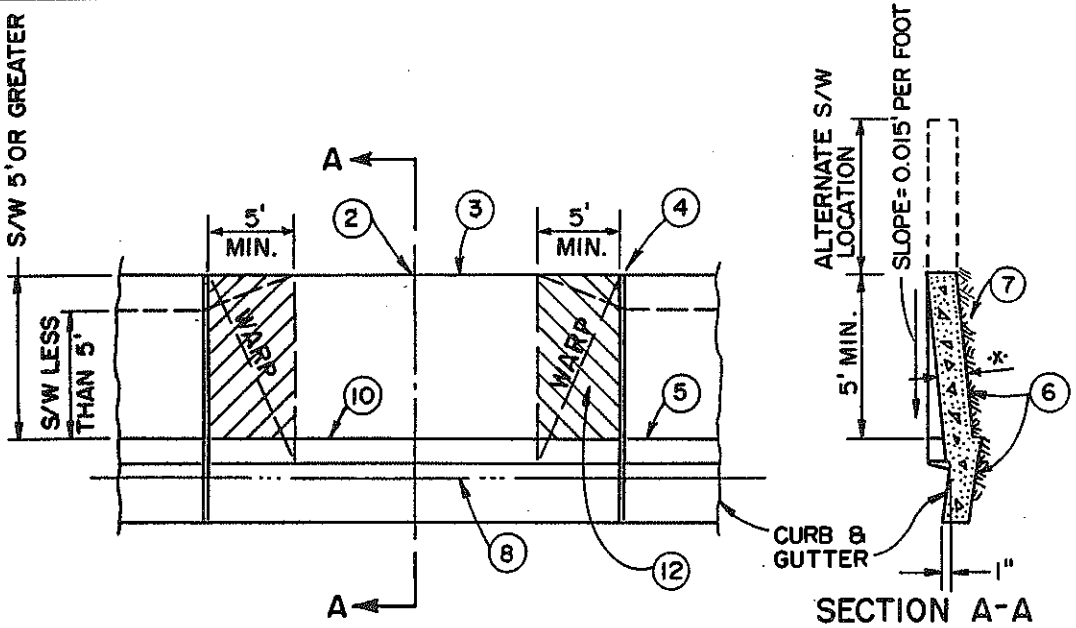

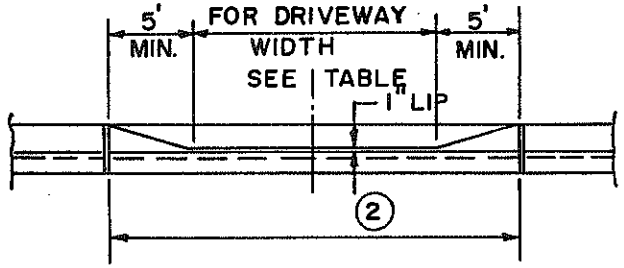

NOTES

1. DEPRESSED CURB SHALL BE PAID FOR AT THE UNIT PRICE BID FOR THE TYPE OF CURB USED AT THAT LOCATION.
2. WHEN WIDTH EXCEEDS 22' PROVIDE A CONTRACTION JOINT ON D/W CENTERLINE.
3. BACK OF D/W OR FACE OF FUTURE S/W.
4. MASTIC EXPANSION JOINT THROUGH CURB & GUTTER. EXPANSION JOINT FILLER SHALL BE 1/2" BITUMINOUS TYPE PREFORMED EXPANSION JOINT FILLER A.S.T.M. D-1751.
5. BACK OF CURB - CONSTRUCTION JOINT OR SCORE MARK.
6. CLASS 'B' CONCRETE, SECT. 725.
7. SUBGRADE PREPARATION, SECT. 301.
8. FLOW LINE OF GUTTER.
9. DEPRESSED CURB.
10. SECTION A-A & ELEVATION, D/W VERTICAL CURB & GUTTER OR ROLL TYPE CURB & GUTTER.
11. ROLL TYPE CURB & GUTTER NOT PERMITTED IN THE CITY OF MESA.
12. 1/4" GROOVES AT 1" O.C. FULL WIDTH OF 5' WARP SECTION, EACH SIDE OF DRIVEWAY. SEE DETAIL NO.1 ON TYPE D RAMP DETAIL NO. 234.

COMMERCIAL & INDUSTRIAL				
DRIVEWAY WIDTH	MIN.	MAX.	CLASS	*DEPTH
COMMERCIAL	+16'	40'	B	6"
INDUSTRIAL	+16'	40'	B	6"
+24' MIN. FOR TWO WAY TRAFFIC				

RESIDENTIAL				
DRIVEWAY WIDTH	MIN.	MAX.	CLASS	*DEPTH
MAJOR STREET	16'	30'	B	5"
COLLECTOR STREET	*12'	30'	B	5"
LOCAL STREET	12'	30'	B	5"
* 16' DESIRABLE				

DETAIL NO. 250

MARICOPA ASSOCIATION of GOVERNMENTS
STANDARD DETAIL

DRIVEWAY ENTRANCES

DETAIL NO. 250

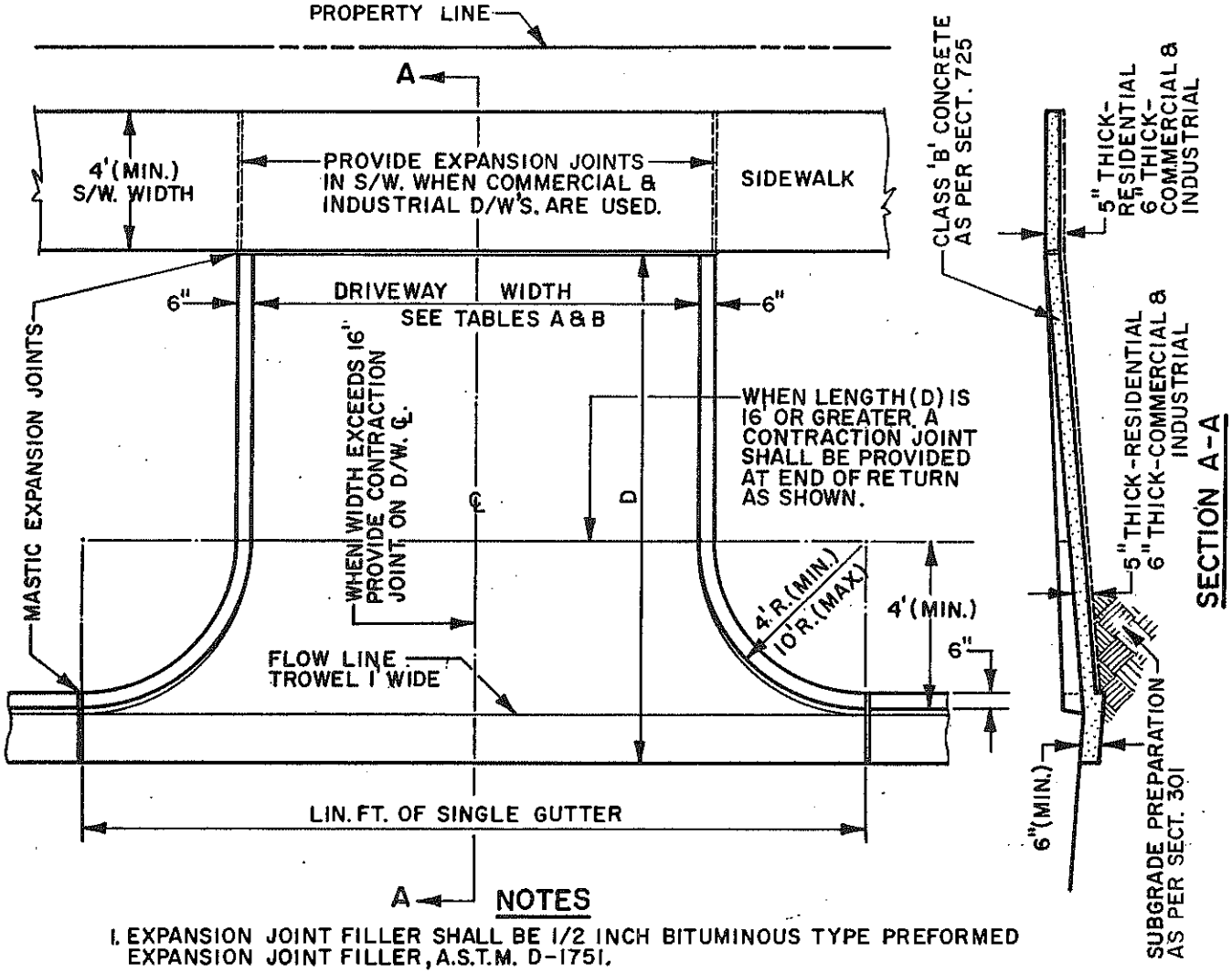

TABLE A		
ZONING	DRIVEWAY WIDTH	
	MIN.*	MAX.
COMMERCIAL	16'	40'
INDUSTRIAL	16'	40'
*24' WHERE 2-WAY TRAFFIC IS ANTICIPATED		

TABLE B		
ZONING	DRIVEWAY WIDTH	
RESIDENTIAL :	MIN.*	MAX.
MAJOR STREET	16'	30'
COLLECTOR STREET	12'	30'
LOCAL STREET	12'	30'
*16' WIDTH IS DESIRABLE		

NOTES

1. EXPANSION JOINT FILLER SHALL BE 1/2 INCH BITUMINOUS TYPE PREFORMED EXPANSION JOINT FILLER, A.S.T.M. D-1751.
2. THIS TYPE D/W TO BE USED ONLY UPON APPROVAL OF ENGINEER.

DETAIL NO. 251	MARICOPA ASSOCIATION of GOVERNMENTS STANDARD DETAIL	RETURN TYPE DRIVEWAYS		DETAIL NO. 251

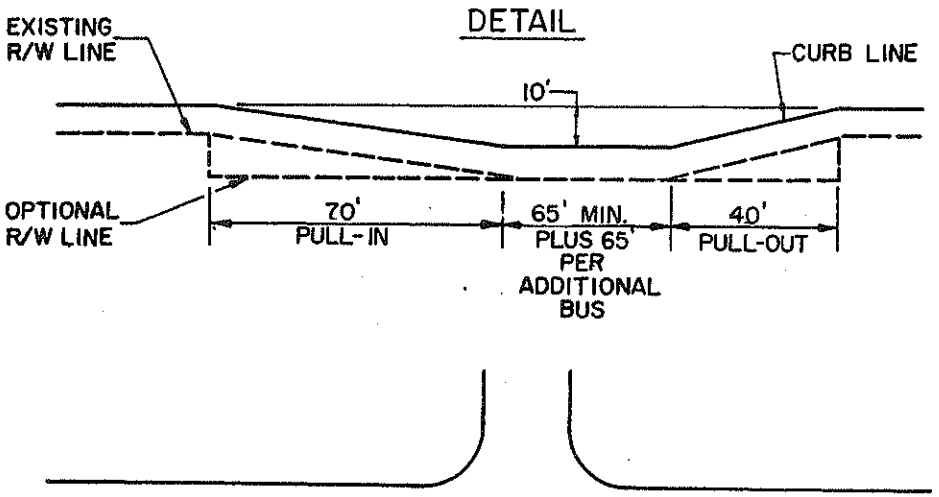

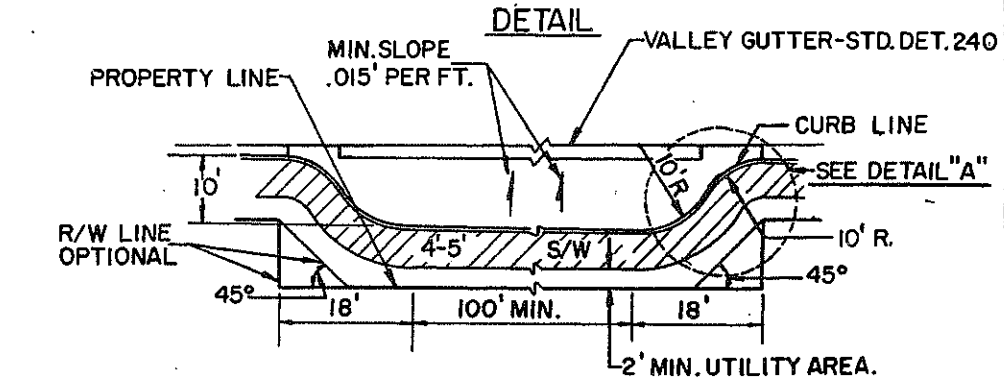

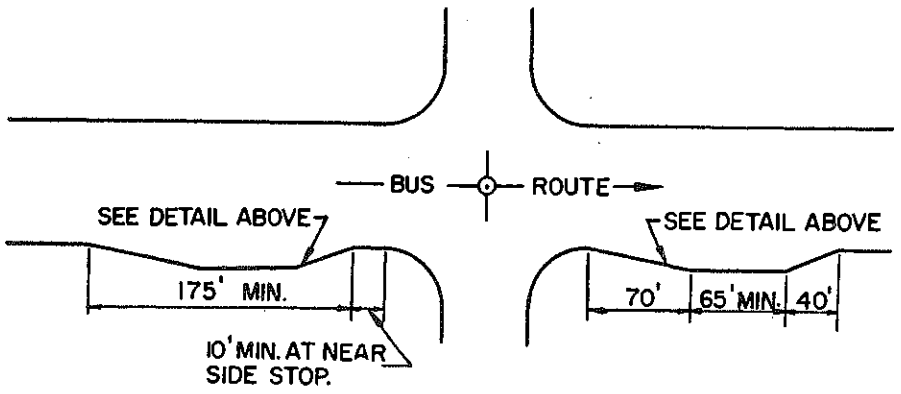

NEAR SIDE

FAR SIDE

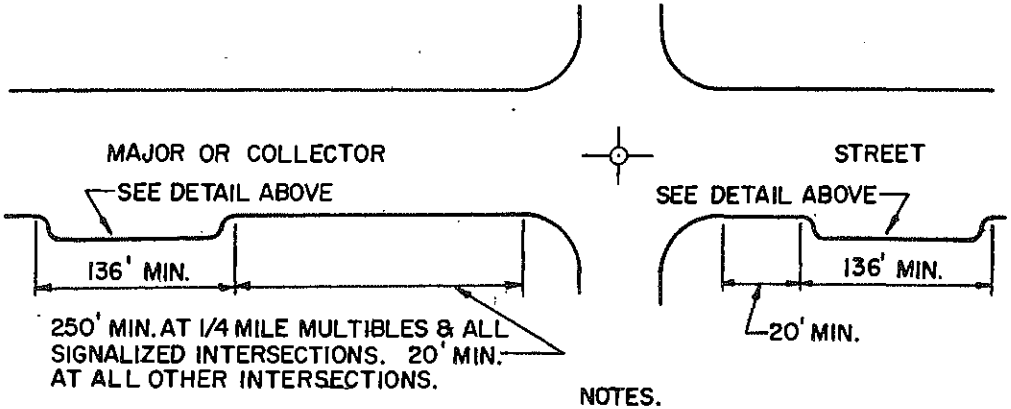

NOTES

1. SUFFICIENT RIGHT-OF-WAY MUST BE AVAILABLE TO CONSTRUCT BUS BAY.
2. RADII, SIDEWALK, CURB & GUTTER, PAVING SLOPE AND CONCRETE APRON SHALL BE CONSTRUCTED AS FOR PARKING BAYS.

BUS BAY

DETAIL "A"

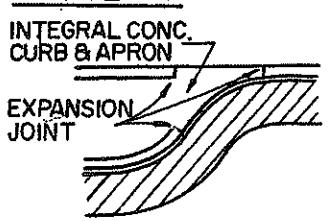

NOTES.

1. SUFFICIENT RIGHT-OF-WAY MUST BE AVAILABLE TO CONSTRUCT PARKING BAY.
2. PARKING BAYS WILL NOT BE ALLOWED WHERE THEY CONFLICT WITH BUS STOPS.

PARKING BAY

DETAIL NO. 252	MARICOPA ASSOCIATION of GOVERNMENTS STANDARD DETAIL	PARKING BAYS		DETAIL NO. 252

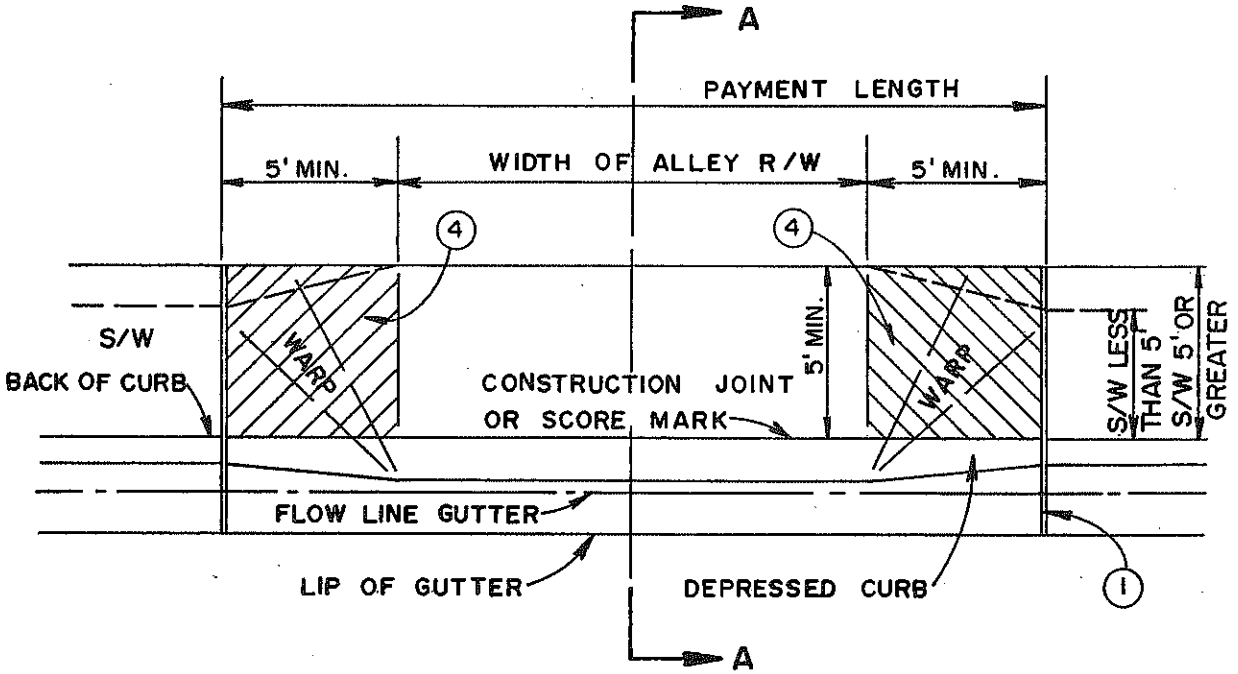

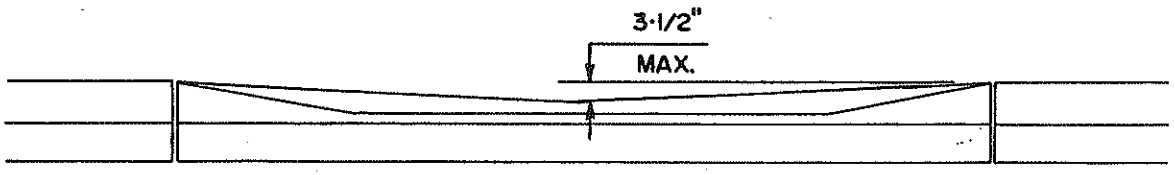

ELEVATION

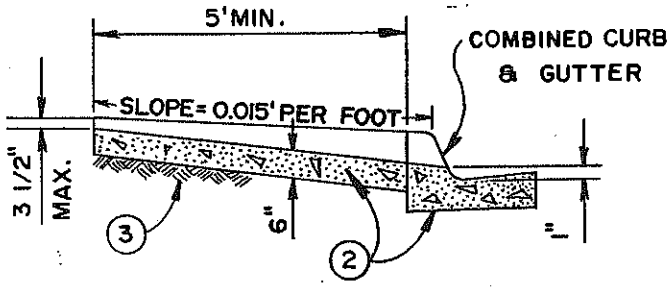

SECTION A-A

NOTES

1. EXPANSION JOINT FILLER SHALL BE 1/2" BITUMINOUS TYPE PREFORMED EXPANSION JOINT FILLER, AS TM D-1751. BETWEEN S/W & ALLEY ENTRANCE & THROUGH CURB & GUTTER.
2. CLASS "B" CONCRETE PER SECTION 725.
3. SUBGRADE PREPARATION, SECTION 301.
4. 1/4" GROOVES AT 1" O.C. FULL WIDTH OF 5' WARP SECTION, EACH SIDE OF ALLEY ENTRANCE. SEE DETAIL NO. 1 ON TYPE D RAMP DETAIL NO. 234.

DETAIL NO. 260	MARICOPA ASSOCIATION of GOVERNMENTS STANDARD DETAIL	ALLEY ENTRANCE (WITH COMBINED CURB & GUTTER)		DETAIL NO. 260

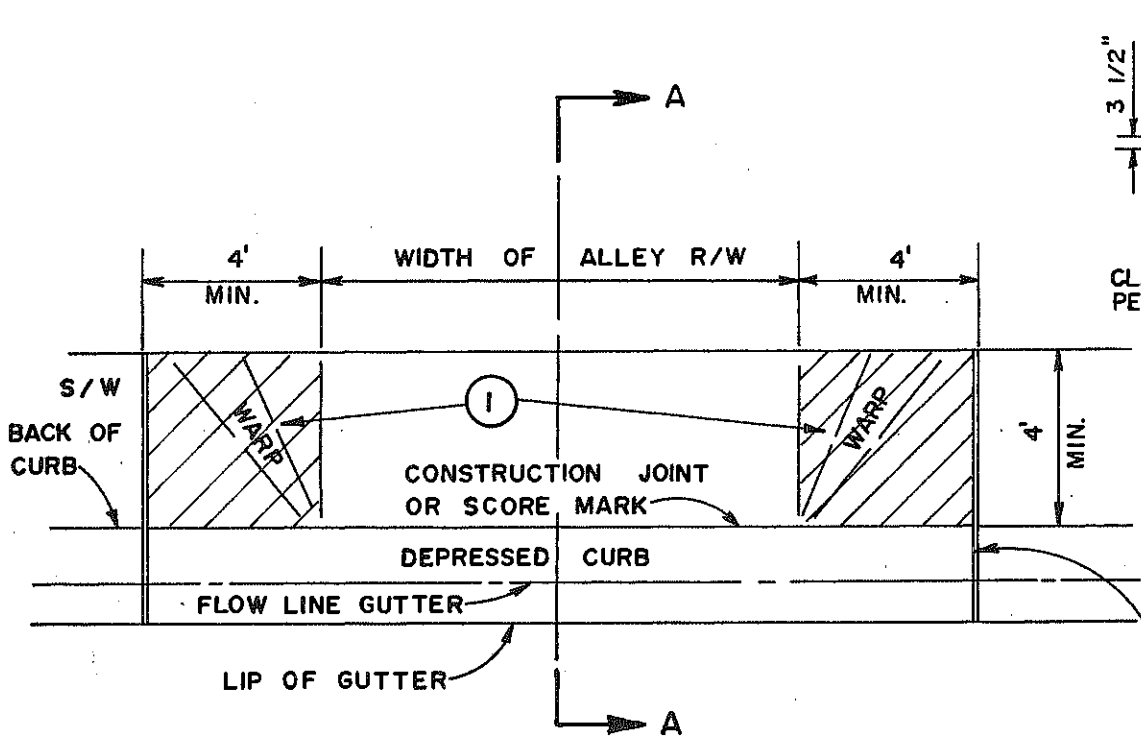

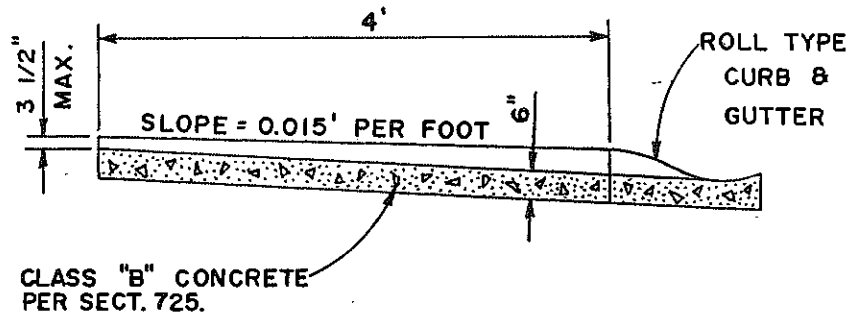

SECTION A-A

EXPANSION JOINT FILLER SHALL BE 1/2" BITUMINOUS TYPE PREFORMED EXPANSION JOINT FILLER, ASTM D-1751.

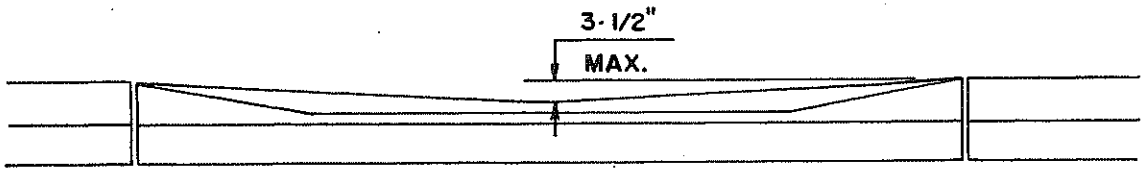

ELEVATION

NOTES

(1) 1/4" GROOVES AT 1" O.C. FULL WIDTH OF 4' WARP SECTION, EACH SIDE OF ALLEY ENTRANCE. SEE DETAIL NO. 1 ON TYPE D RAMP DETAIL 234.

DETAIL NO. 261	MARICOPA ASSOCIATION of GOVERNMENTS STANDARD DETAIL	ALLEY ENTRANCE (WITH ROLL TYPE CURB & GUTTER)		DETAIL NO. 261

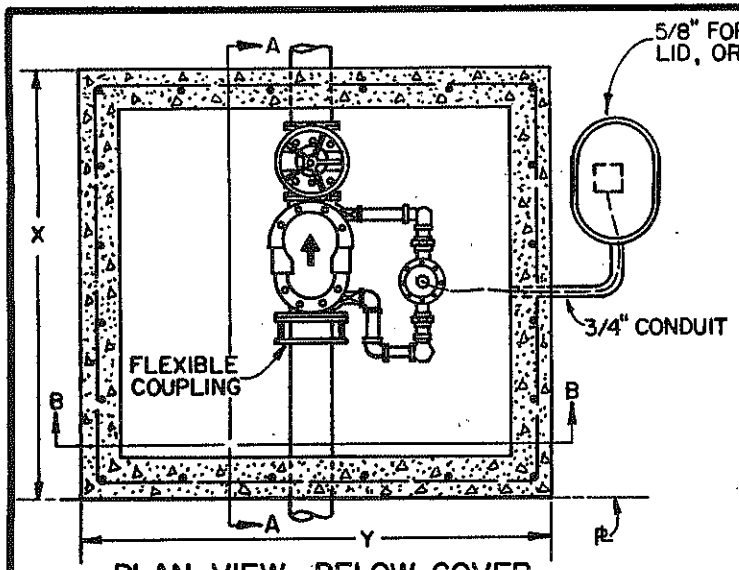

PLAN VIEW–BELOW COVER

DIA. OF PIPE	X	Y	Z	BY-PASS METER SIZE	A
4"	60"	66"	49"	5/8" X 3/4"	30"
6"	66"	72"	49"	5/8" X 3/4"	30"
8"	72"	72"	58"	1"	36"
10"	78"	72"	69"	1 1/2"	36"

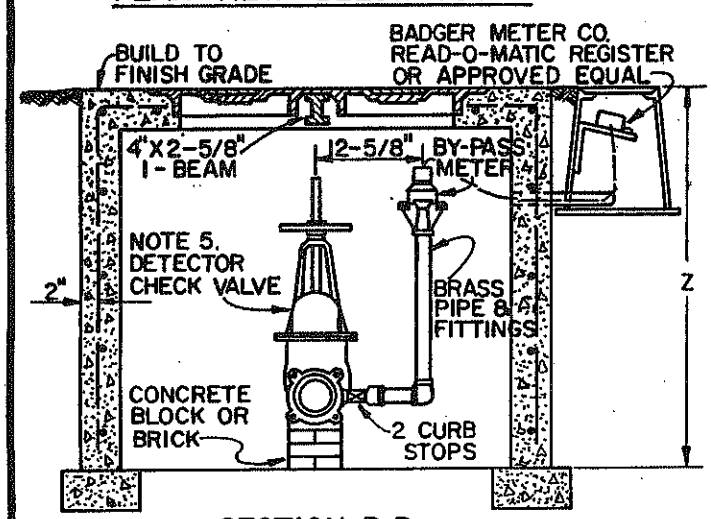

SECTION B-B

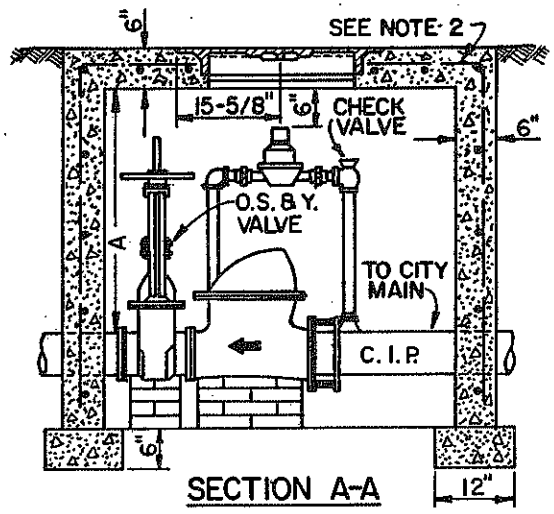

SECTION A-A

NOTES:

1. FIRELINE FROM CITY MAIN TO PROPERTY LINE SHALL BE CONSTRUCTED OF CAST IRON PIPE.
2. REINFORCING TO BE 1/2" ϕ ROD ON 6" CENTERS EACH WAY ON TOP AND 12" CENTERS EACH WAY ON THE SIDES.
3. COVERS TO CONSIST OF TWO METER BOX COVERS STD. DET. 314.
4. BY-PASS METER TO BE ACCORDING TO GOVERNING AGENCY.
5. CHECK VALVE TO BE GLOBE MODEL "A" GRINNEL, HERSEY MODEL D.C., VIKING MODEL "A", OR APPROVED EQUAL.
6. VAULT SHALL BE CONSTRUCTED IN OWNERS PROPERTY AGAINST THE FRONT PROPERTY LINE OR ANOTHER APPROVED LOCATION. WALLS & FENCES SHALL NOT OBSTRUCT ACCESS.
7. CITY CONTROL VALVE TO BE REQUIRED AT MAIN.
8. PARTS OF PIPE TO BE EMBEDDED IN CONCRETE SHALL BE WRAPPED WITH 30# ASPHALT ROOFING FELT.
9. REMOTE READING DEVICE SHALL BE OF SELF GENERATING ELECTRICAL TYPE. HYDRAULIC OR MECHANICAL DRIVE REGISTERS WILL NOT BE ACCEPTABLE.
10. CONCRETE TO BE CLASS "B" PER SECT. 725.

DETAIL NO. 346	MARICOPA ASSOCIATION of GOVERNMENTS STANDARD DETAIL	FIRE LINE DETECTOR CHECK VAULT		DETAIL NO. 346

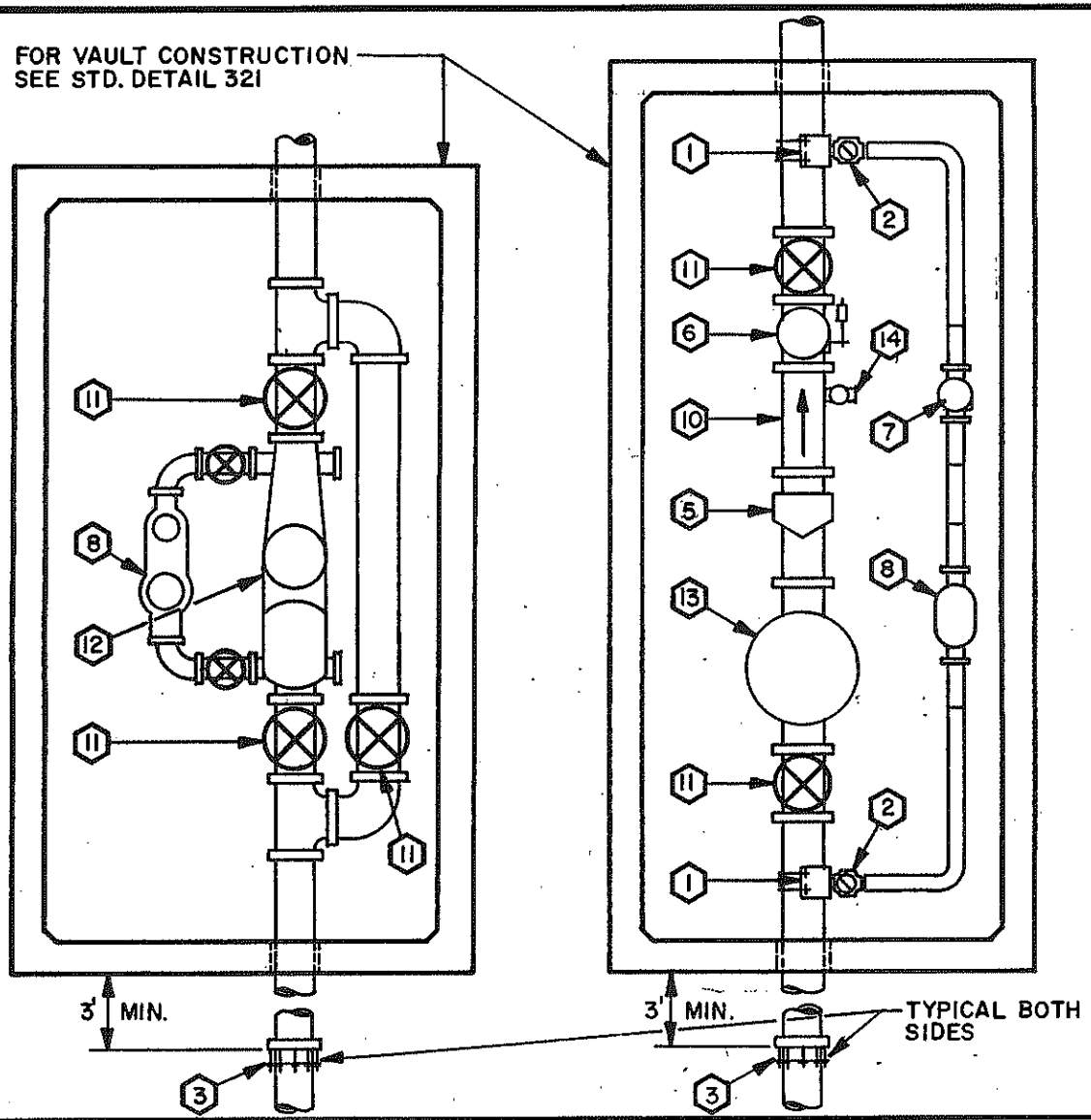

LEGEND

1. DOUBLE STRAP ALL BRONZE SERVICE SADDLES.
2. CORP. STOP, 2" (BALL TYPE).
3. ADAPTER, FLANGED TO MECH. JOINT FOR A.C.P.
4. GATE VALVE, FLANGED, WITH HAND WHEEL, OPEN LEFT.
5. TURBOMETER: ROCKWELL SERIES 'W' OR HERSEY SERIES 'M.H.R.' OR NEPTUNE TRIDENT TURBINE.
6. FLANGED SWING CHECK VALVE WITH EXTERNAL LEVER AND WEIGHT
7. 2" BRONZE CHECK VALVE.
8. 2" TURBOMETER: ROCKWELL 'W-160' OR HERSEY 'M.H.R.'. OR NEPTUNE TRIDENT TURBINE
9. STRAINER (3", 4", 6") AVAILABLE FROM METER MANUFACTURER, INSTALL ONLY WHEN 'TURBO' IS USED.
10. FLANGED SPOOL (3 PIPE DIAMETERS IN LENGTH).
11. O.S. & Y. GATE VALVE, FLANGED WITH HAND WHEEL OPEN LEFT, AND RISING STEM.
12. TURBOMETER U.L. APPROVED: ROCKWELL W-5000 DR. OR W-2000 DR. OR HERSEY FM.-CT. OR NEPTUNE TURBINE - F.S-UL.
13. 6" OR 10" STRAINER U.L. APPROVED.
14. 2" THREADED OUTLET AND GATE VALVE.

NOTES

1. FOR LARGER METERS SPECIAL VAULT DESIGN IS REQUIRED.
2. USE OF REMOTE READING DEVICE AT OPTION OF UTILITY.
3. CERTAIN AGENCIES AND/OR UTILITIES PREFER TO CONSTRUCT VAULT, CONTACT AGENCY INVOLVED PRIOR TO VAULT CONSTRUCTION.

DETAIL NO. 345-2	MARICOPA ASSOCIATION of GOVERNMENTS STANDARD DETAIL	4", 6" WATER METER WITH ON-SITE FIRE HYDRANTS	DETAIL NO. 345-2

REVISED 1983

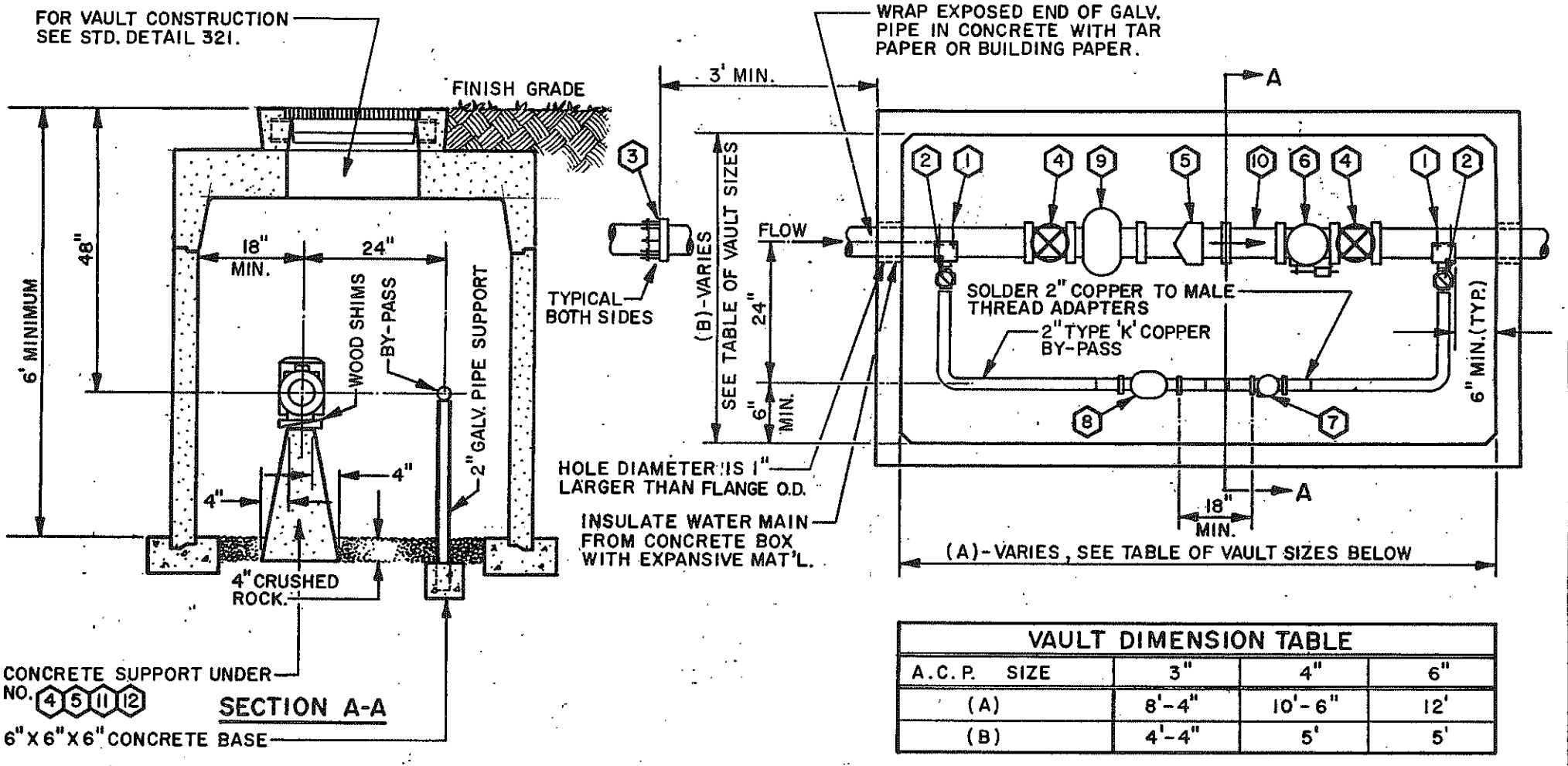

VAULT DIMENSION TABLE			
A.C.P. SIZE	3"	4"	6"
(A)	8'-4"	10'-6"	12'
(B)	4'-4"	5'	5'

NOTE: METER VAULTS MAY BE EITHER BLOCK MASONRY OR CAST-IN-PLACE OR PRE-CAST CONCRETE, SEE STD. DETAIL 321 FOR VAULT CONSTRUCTION.

DETAIL NO. 345-1	MARICOPA ASSOCIATION of GOVERNMENTS STANDARD DETAIL	3",4",6" WATER METER		DETAIL NO. 345-1

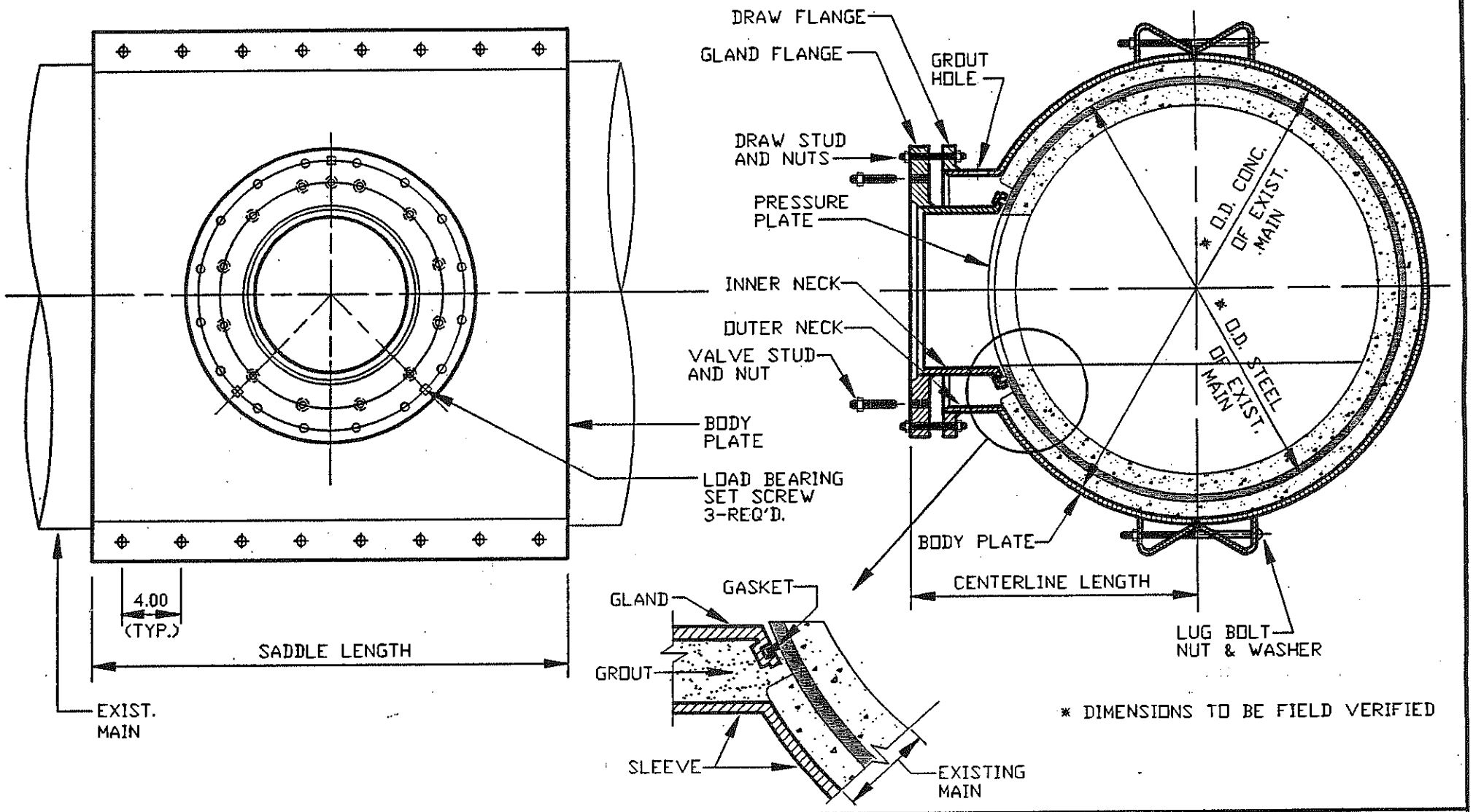

DETAIL NO. 342	MARICOPA ASSOCIATION of GOVERNMENTS STANDARD DETAIL	CONCRETE PRESSURE PIPE TAPPING SLEEVE		DETAIL NO. 342

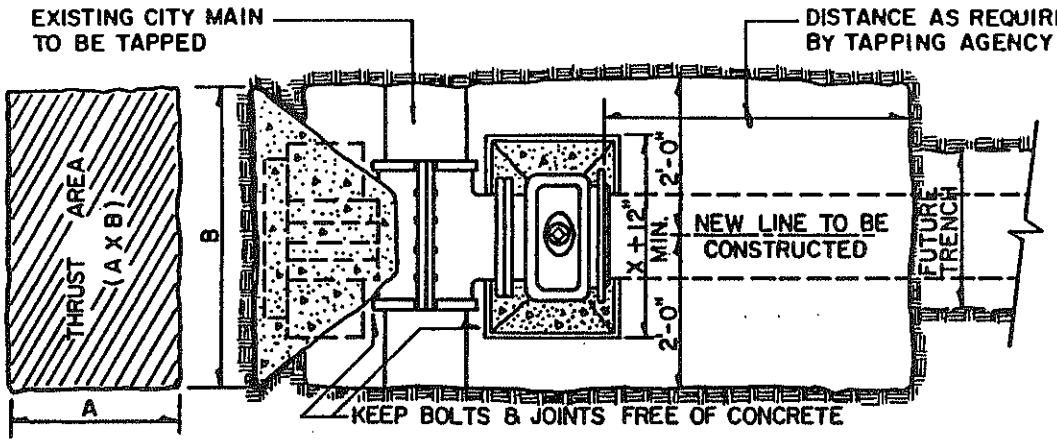

PLAN

CONCRETE: CLASS "B" PER SECT. 725 NORMALLY, CURE 24 HRS. BEFORE BACKFILLING.

OPTIONAL BLOCKING - 2"X8"X12" SOLID CONCRETE MASONRY UNITS AS INDICATED.

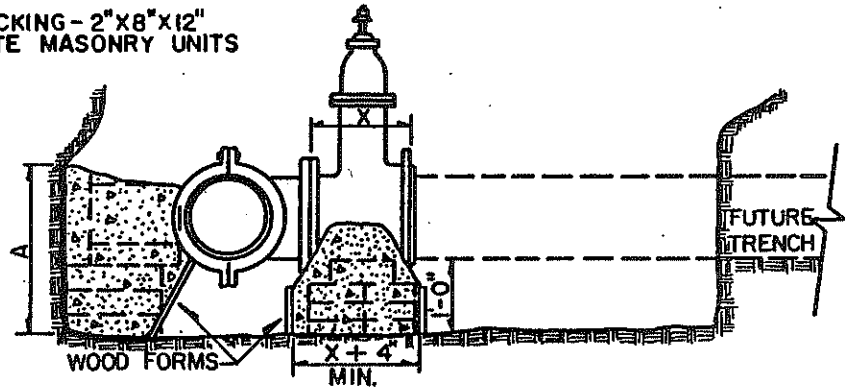

ELEVATION

NOTES

1. TAPPING SLEEVE TO BE PLACED A MINIMUM OF 18" FROM ANY BELL COUPLING, VALVE, FITTING, OR OTHER OBSTRUCTION.
2. CONTRACTOR SHALL EXCAVATE AS SHOWN AND SHALL SET TAPPING SLEEVE AND VALVE AND TIGHTEN ALL BOLTS PRIOR TO THE PRESSURE TEST.
3. ALL TAPPING SLEEVES AND VALVES MUST BE PRESSURE TESTED PRIOR TO BLOCKING OR TAPPING. THE TEST MUST BE WITNESSED AND APPROVED BY THE INSPECTOR.
4. BLOCKS ARE TO EXTEND TO UNDISTURBED GROUND AND BE INSTALLED BEFORE THE TAP IS MADE. ALL FLANGE BOLTS SHALL BE FREE AND CLEAR OF CONCRETE.
5. TAPS SHALL BE MADE BY CITY CREWS AT PREVAILING RATES OR BY APPROVED CONTRACTORS WHEN ALLOWED BY CITY.
6. THIS DETAIL COVERS TAPPING SLEEVES 4" THROUGH 16" IN SIZE ON DUCTILE IRON, CAST IRON AND ASBESTOS CEMENT PIPE. ANY OTHER SIZE OR TYPE OF PIPE WILL REQUIRE A SEPERATE SUBMITTAL AND APPROVAL BY THE ENGINEER.

SIZE OF PIPE BEING CONNECTED	MINIMUM THRUST AREA REQUIRED EQUALS (AXB)
4" & LESS	3 SQUARE FEET
6"	4 " "
8"	6 " "
10"	9 " "
12"	13 " "
16"	23 " "

DETAIL NO. 340	MARICOPA ASSOCIATION of GOVERNMENTS STANDARD DETAIL	INSTALLING TAPPING SLEEVES AND VALVES	DETAIL NO. 340

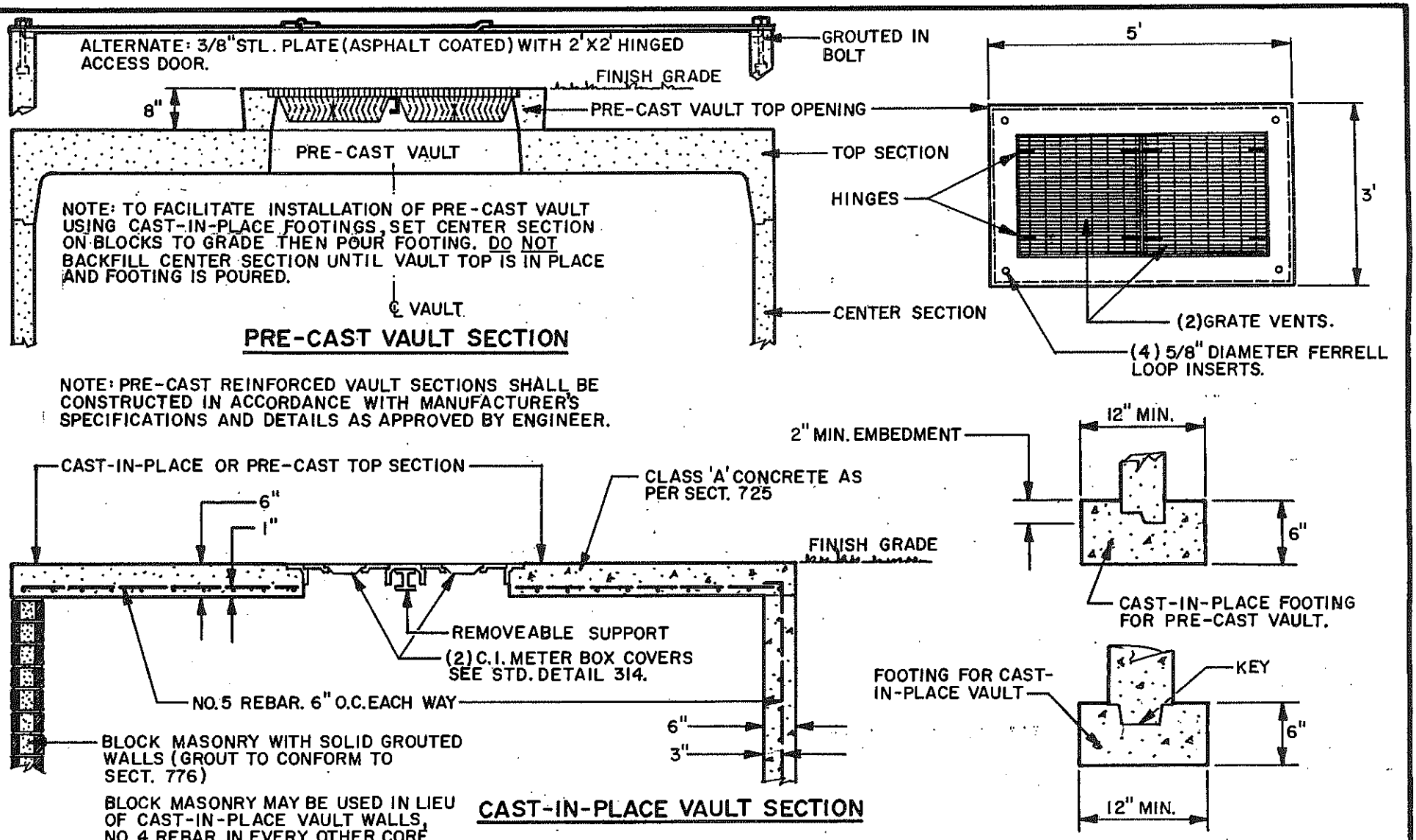

DETAIL NO. 321	MARICOPA ASSOCIATION of GOVERNMENTS STANDARD DETAIL	STANDARD WATER METER VAULT	DETAIL NO. 321

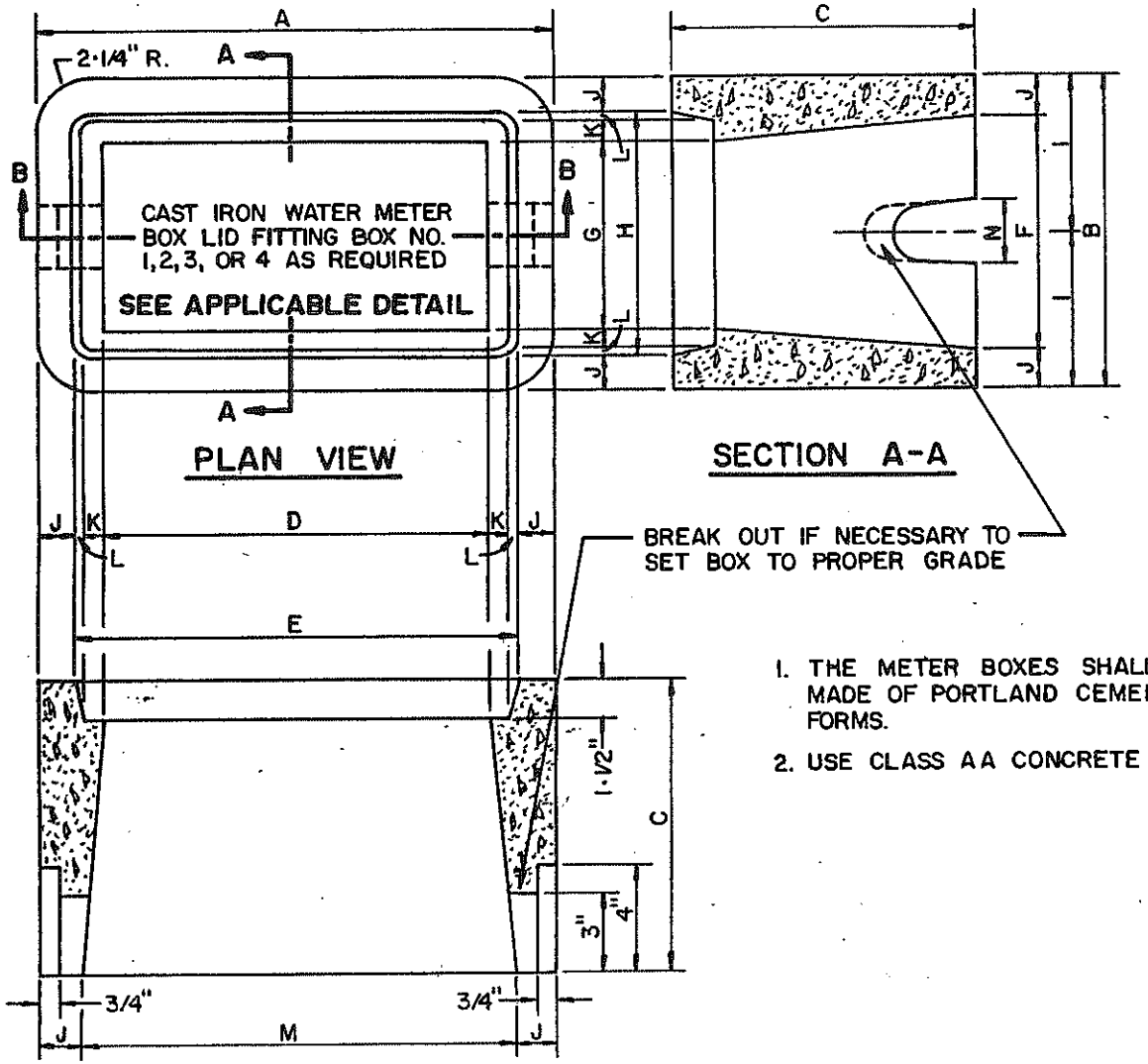

METER BOX DIMENSIONS				
DIM.	BOX NUMBER			
	1	2	3	4
A	19"	24-1/2"	29-1/2"	33-1/2"
B	12"	16-3/4"	18-1/2"	22-3/4"
C	11"	12"	13"	12"
D	14"	19"	23-3/4"	27-3/4"
E	16"	22"	26-1/2"	30-1/2"
F	9"	13-1/4"	15"	19-3/4"
G	7"	11-1/4"	12-3/4"	17"
H	9"	14-1/4"	15-1/2"	19-3/4"
I	6"	8-3/8"	9-1/4"	11-3/8"
J	1-1/2"	1-3/4"	1-3/4"	1-1/2"
K	3/4"	1-1/8"	1"	1"
L	1/4"	3/8"	3/8"	3/8"
M	16"	21"	25-1/2"	30-1/2"
N	2-1/2"	3-1/2"	4"	4"
	5/8" OR 3/4" METER	1" METER	1-1/2" METER	2" METER

NOTES

1. THE METER BOXES SHALL CONFORM TO THE DIMENSIONS AS SHOWN AND SHALL BE MADE OF PORTLAND CEMENT CONCRETE POURED AND TAMPED (OR VIBRATED) IN TRUE FORMS.
2. USE CLASS AA CONCRETE PER SECTION 725.

DETAIL NO. 320	MARICOPA ASSOCIATION of GOVERNMENTS STANDARD DETAIL	CONCRETE WATER METER BOXES		DETAIL NO. 320

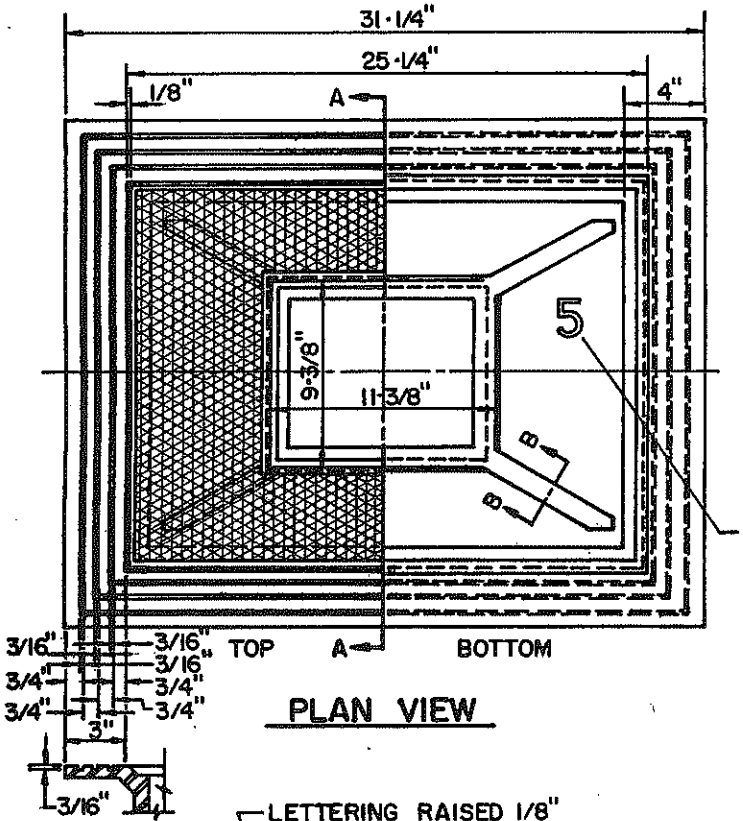

PLAN VIEW

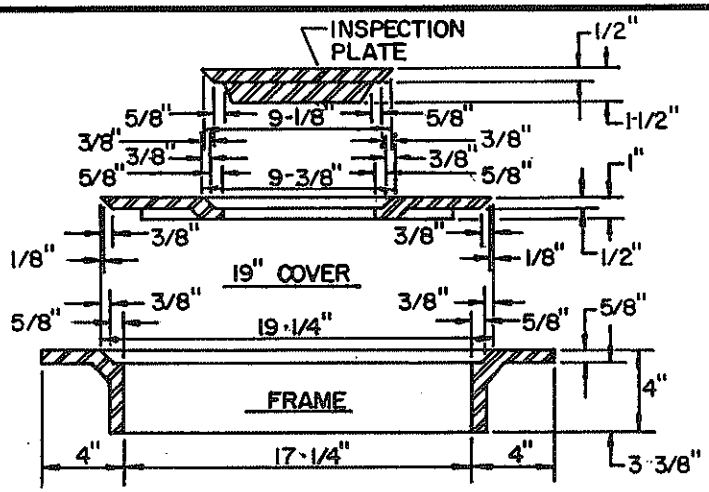

SECTION A-A

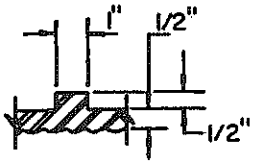

SECTION B-B

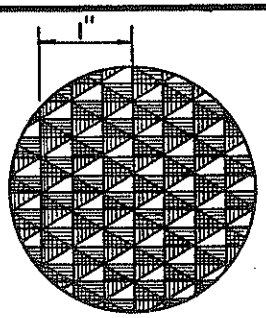

DETAIL - TOP OF COVER

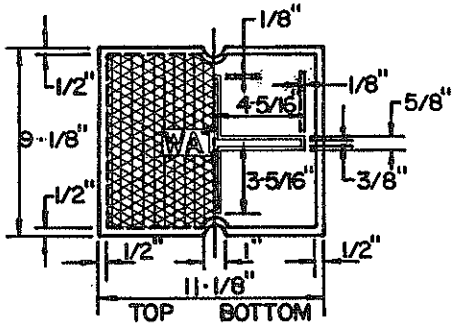

INSPECTION PLATE

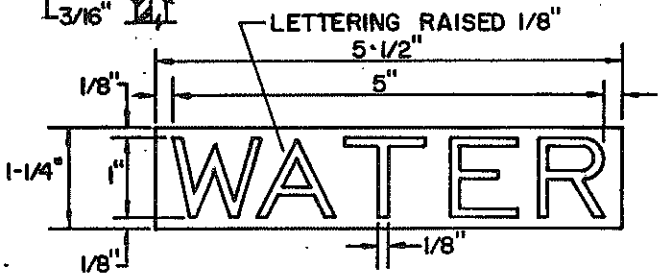

LETTERING DETAIL

NOTES

1. FOR CASTING SPECIFICATIONS, SEE SECTION 787.
2. THE BEARING EDGES OF THESE CASTINGS SHALL BE MACHINED TO INSURE A FULL BEARING ON A FLAT SURFACE.

DETAIL NO. 314	MARICOPA ASSOCIATION of GOVERNMENTS STANDARD DETAIL	CAST IRON WATER METER BOX COVER NUMBER 5		DETAIL NO. 314

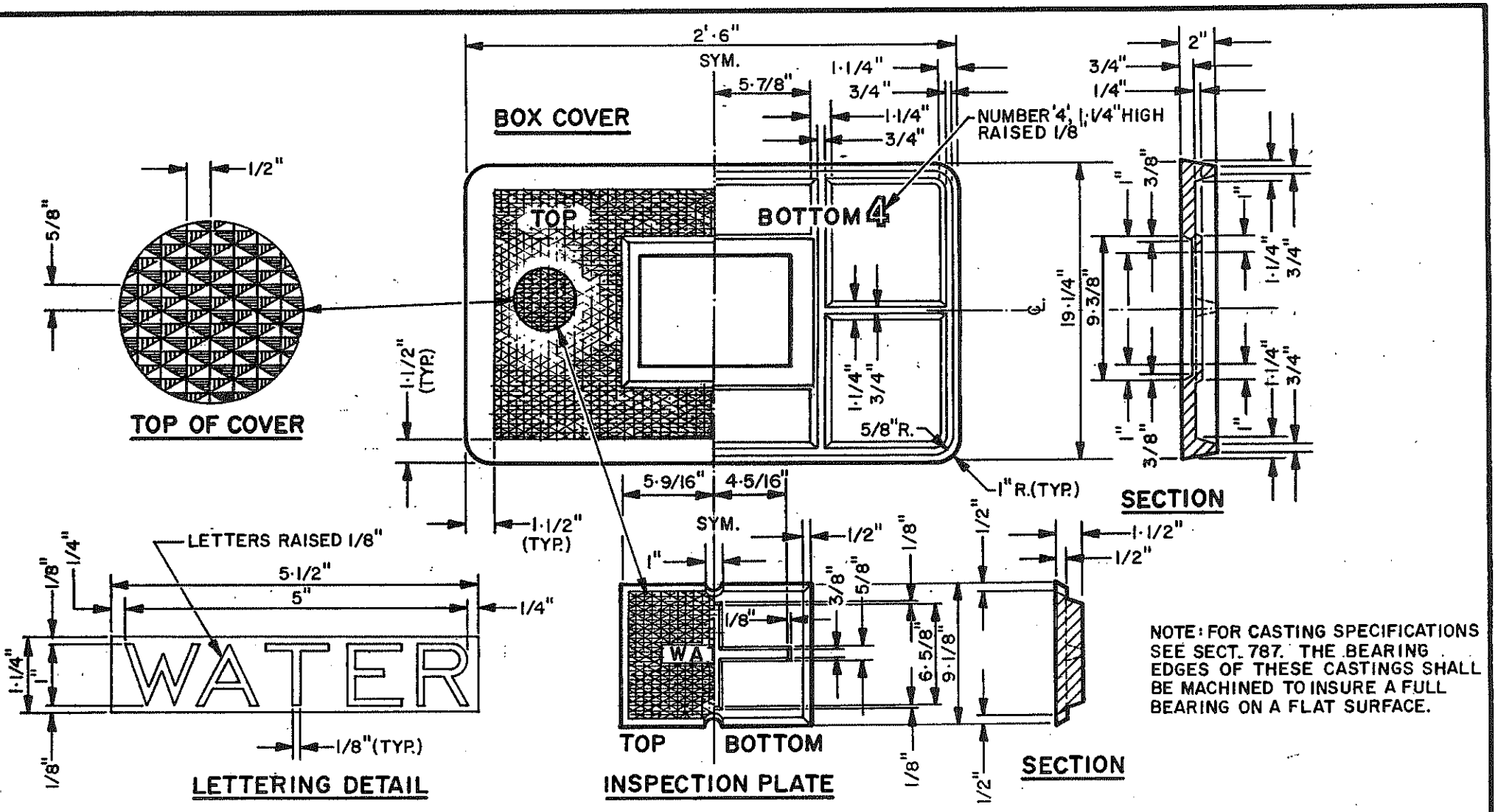

DETAIL NO. 313	MARICOPA ASSOCIATION of GOVERNMENTS STANDARD DETAIL	CAST IRON WATER METER BOX COVER NO. 4		DETAIL NO. 313

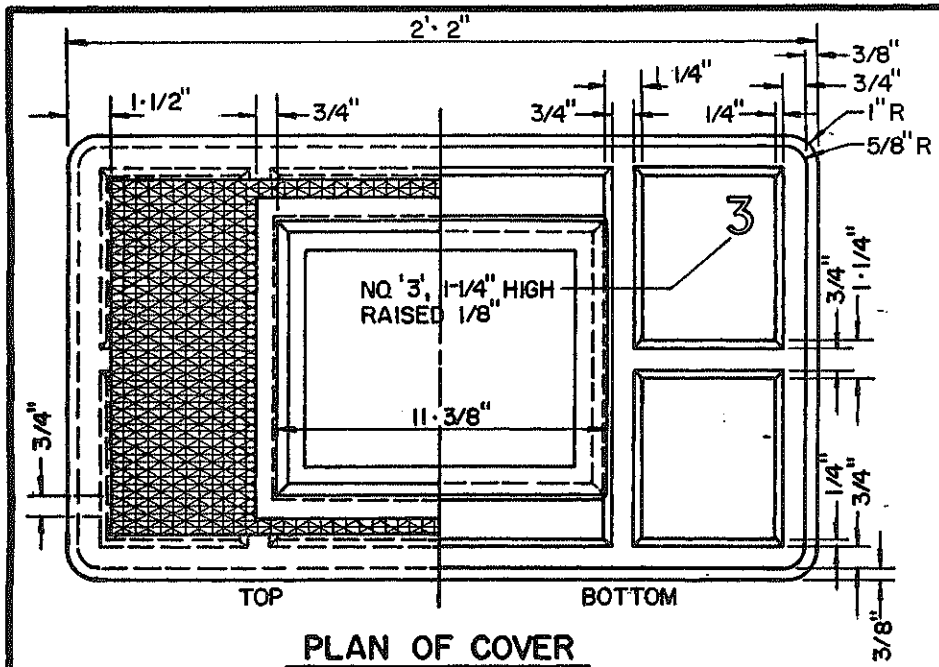

PLAN OF COVER

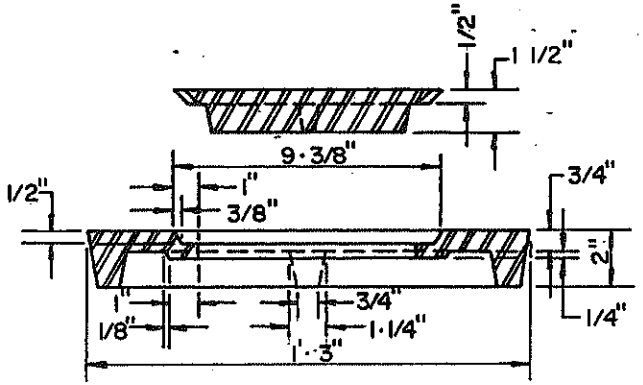

SECTION 'A'-'A'

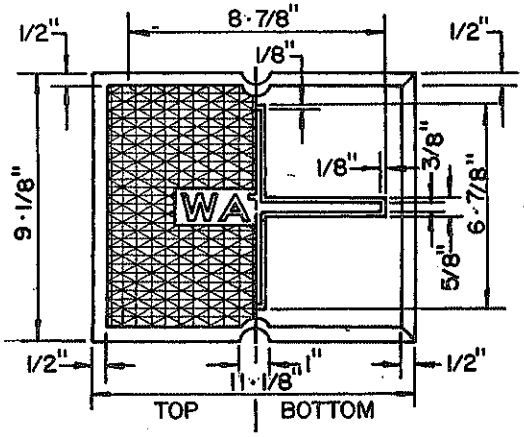

INSPECTION PLATE

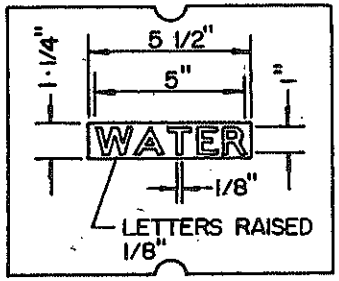

LETTERING DETAIL

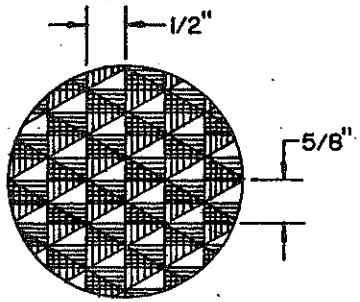

DETAIL
TOP OF COVER & PLATE

NOTES

1. INSPECTION PLATE IS SAME AS USED WITH METER BOX COVER NO. 4.
2. FOR CASTING SPECIFICATIONS, SEE SECTION 787.

DETAIL NO. 312	STANDARD DETAIL	CAST IRON WATER METER BOX COVER NUMBER 3		DETAIL NO. 312

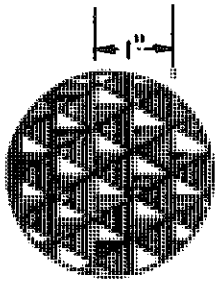

TOP OF COVER

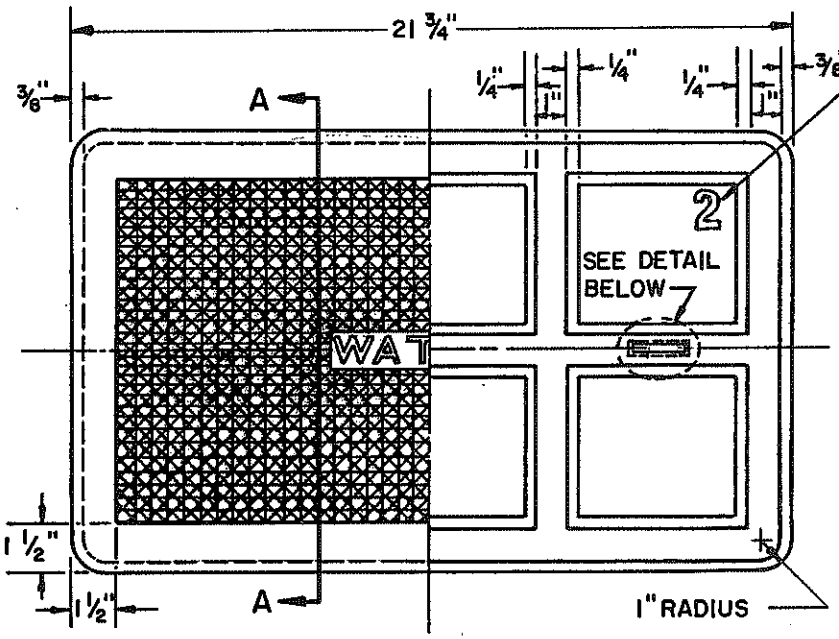

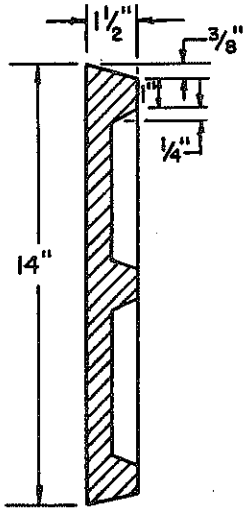

SECTION A-A

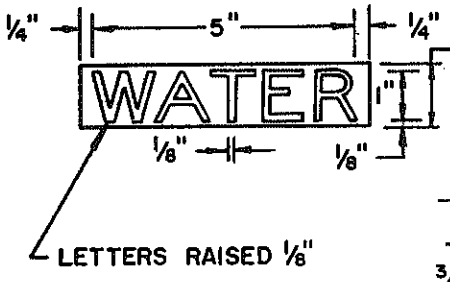

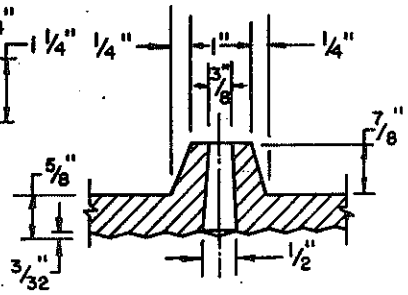

SECTION B-B

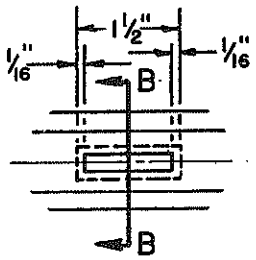

DETAIL

NOTE

FOR CASTING SPECIFICATIONS SEE SECT. 787.

DETAIL NO. 311	MARICOPA ASSOCIATION of GOVERNMENTS STANDARD DETAIL	CAST IRON WATER METER BOX COVER NO. 2		DETAIL NO. 311

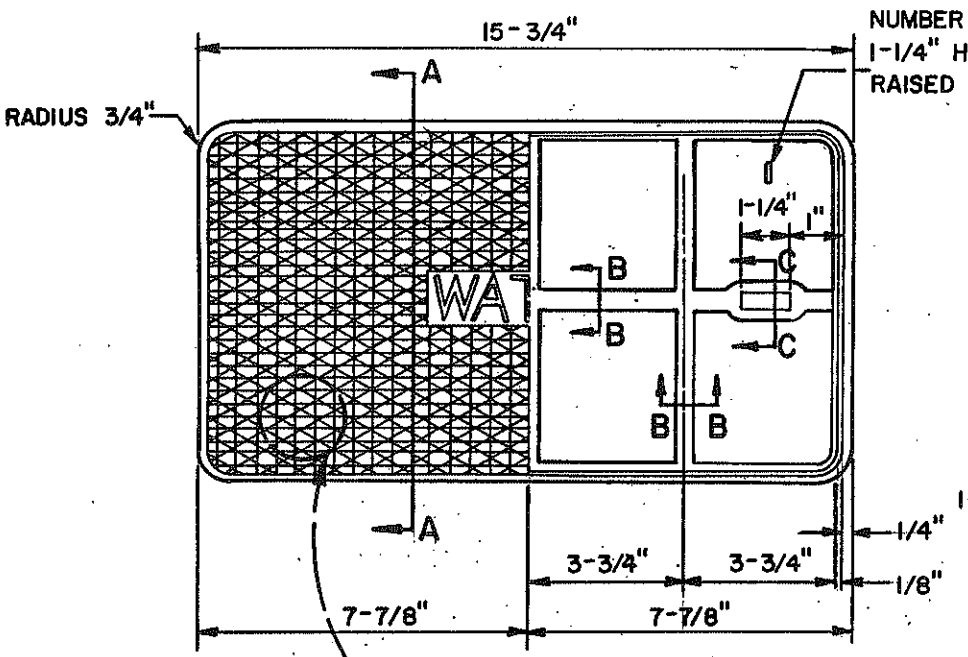

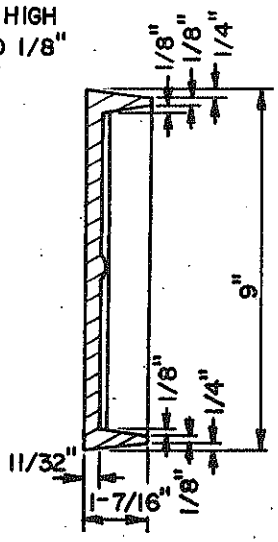

SECTION A-A

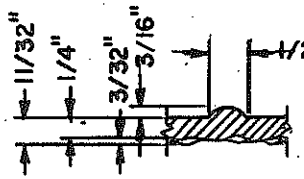

SECTION B-B

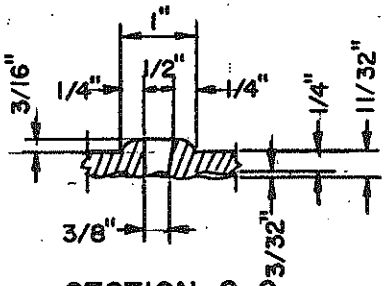

SECTION C-C

PLAN

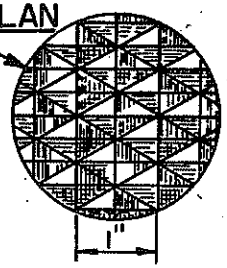

TOP OF COVER

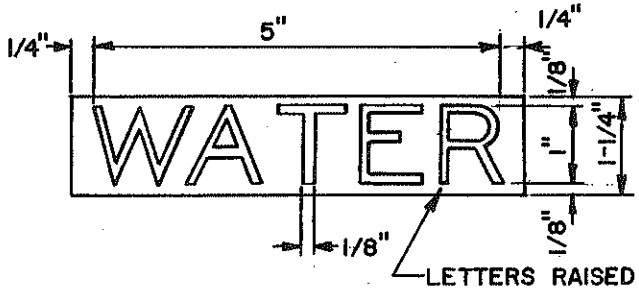

FOR CASTING SPECIFICATIONS
SEE SECT. 787

DETAIL NO. 310	MARICOPA ASSOCIATION of GOVERNMENTS STANDARD DETAIL	CAST IRON WATER METER BOX COVER NO.1		DETAIL NO. 310

RESTRAINED LENGTHS, LR, FOR DUCTILE IRON PIPE

NOMINAL PIPE SIZE	HORIZONTAL BENDS			TEES		VERTICAL OFFSETS						DEAD ENDS
						90° BEND FITTINGS		45° BEND FITTINGS		22½° BEND FITTINGS		
	90°	45°	22½	LRN=0'	LRN=10'	DOWN BEND	UP BEND	DOWN BEND	UP BEND	DOWN BEND	UP BEND	
4	18	7	4	30	8	31	18	13	7	6	3	31
6	25	10	5	43	20	44	25	18	10	9	5	44
8	32	13	6	56	34	58	32	24	13	11	6	58
10	38	16	8	68	45	69	38	29	16	14	8	69
12	45	19	9	80	57	81	45	34	19	16	9	81
14	51	21	10	91	68	92	51	38	21	18	10	92
16	57	24	11	103	79	104	57	43	24	21	11	104
18	62	26	12	113	90	115	62	48	26	23	12	115
20	68	28	14	125	100	126	68	52	28	25	14	126
24	79	33	16	145	121	147	79	61	33	29	16	147

RESTRAINED LENGTHS, LR, FOR DUCTILE IRON PIPE WITH POLYETHYLENE WRAP

NOMINAL PIPE SIZE	HORIZONTAL BENDS			TEES		VERTICAL OFFSETS						DEAD ENDS
						90° BEND FITTINGS		45° BEND FITTINGS		22½° BEND FITTINGS		
	90°	45°	22½	LRN=0'	LRN=10'	DOWN BEND	UP BEND	DOWN BEND	UP BEND	DOWN BEND	UP BEND	
4	26	11	5	69	18	72	26	30	11	14	5	72
6	36	15	7	99	47	102	36	42	15	20	7	102
8	47	19	9	130	78	133	47	55	19	26	9	133
10	56	23	11	157	103	159	56	66	23	32	11	159
12	65	27	13	185	131	187	65	77	27	37	13	187
14	74	31	15	211	156	214	74	89	31	42	15	214
16	82	34	16	238	183	241	82	100	34	48	16	241
18	90	37	18	263	207	266	90	110	38	53	18	266
20	96	41	20	289	233	292	98	121	41	58	20	292
24	113	47	22	337	280	340	113	141	47	68	22	340

NOTE:
1. ALL JOINTS WITHIN THE SPECIFIED LENGTH LR MUST BE RESTRAINED. ALL LENGTHS ARE GIVEN IN FEET
2. THE MAXIMUM TEST PRESSURE SHALL NOT EXCEED 187.5 PSI.
3. THE MINIMUM DEPTH OF BURY SHALL BE THREE FEET TO TOP OF PIPE.
4. RESTRAINED LENGTHS MAY BE REDUCED WHEN SUPPORTED BY ENGINEERING CALCULATIONS.

DETAIL NO. 303-2	MARICOPA ASSOCIATION of GOVERNMENTS STANDARD DETAIL	JOINT RESTRAINT FOR DUCTILE IRON AND POLYETHYLENE WRAPPED DUCTILE IRON WATER LINES		DETAIL NO. 303-2

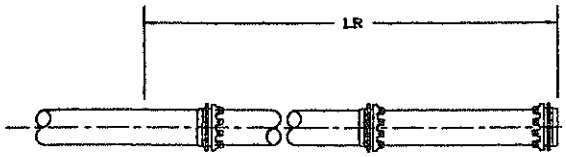

DEAD ENDS

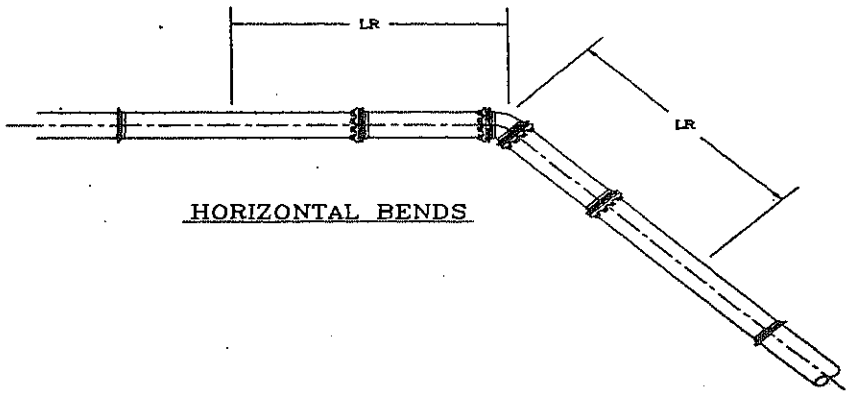

HORIZONTAL BENDS

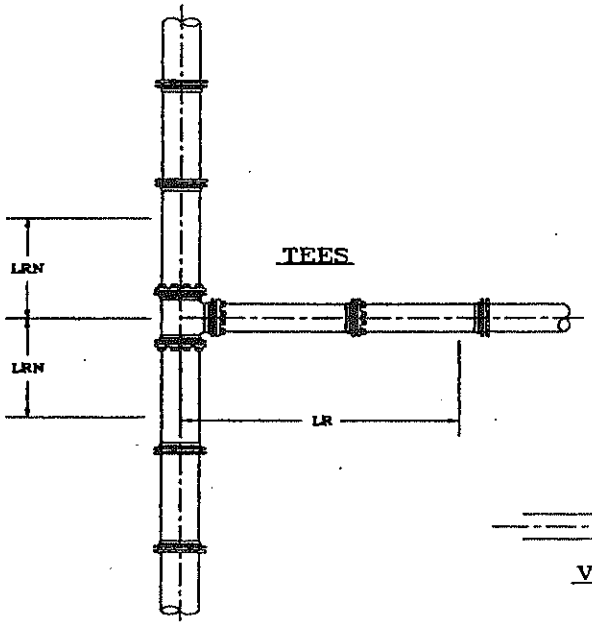

TEES

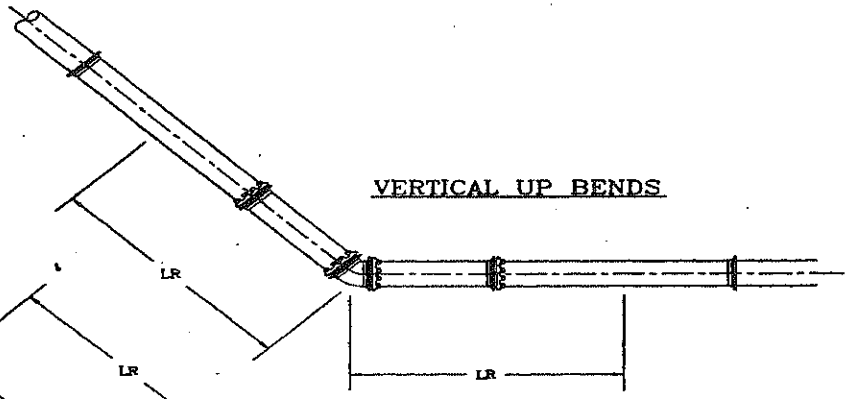

VERTICAL UP BENDS

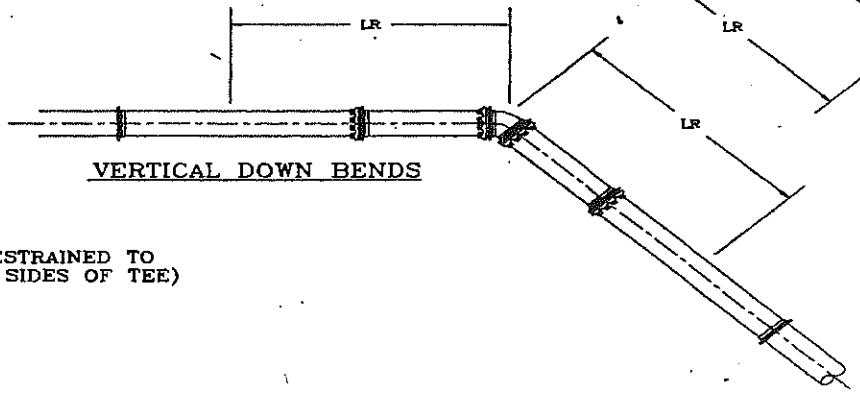

VERTICAL DOWN BENDS

LRN = SHORTEST LENGTH OF PIPE RESTRAINED TO THE RUN OF THE TEE FITTING (BOTH SIDES OF TEE)

DETAIL NO. 303-1	MARICOPA ASSOCIATION of GOVERNMENTS STANDARD DETAIL	JOINT RESTRAINT FOR DUCTILE IRON AND POLYETHYLENE WRAPPED DUCTILE IRON PIPE	DETAIL NO. 303-1

THIS DETAIL IS FOR USE ONLY ON UNDERGROUND INSTALLATIONS WHERE THE USE OF CONCRETE THRUST BLOCKING PER STD. DET. 380 CANNOT BE USED BECAUSE OF OBSTRUCTIONS, OR REQUIREMENTS OF THE SPECIFICATIONS...

CLAMPS SHALL BE 1/2 BY 2 INCHES FOR PIPE 4 AND 6 INCHES IN DIAMETER; 5/8 BY 2-1/2 INCHES FOR PIPE 8 AND 10 INCHES; 5/8 BY 3 INCHES FOR PIPE 12 INCHES. BOLT HOLES SHALL BE 1/16 INCH IN DIAMETER LARGER THAN BOLTS.

RODS SHALL BE 3/4 INCHES IN DIAMETER FOR PIPES 4,6 AND 8 INCHES IN DIAMETER; 7/8 INCHES FOR PIPE 10 INCHES AND 1 INCH IN DIAMETER FOR PIPE 12 INCHES.

BOLTS SHALL BE 5/8 INCHES IN DIAMETER FOR PIPE 4,6 AND 8 INCHES IN DIAMETER; 3/4 INCHES FOR PIPE 10 INCHES AND 7/8 INCHES IN DIAMETER FOR PIPE 12 INCHES.

WASHERS MAY BE CAST IRON OR STEEL, ROUND OR SQUARE. DIMENSIONS FOR CAST IRON WASHERS ARE 5/8 BY 3 INCHES FOR PIPE 4,6,8 AND 10 INCHES IN DIAMETER AND 3/4 BY 3-1/2 INCHES FOR PIPE 12 INCHES. DIMENSIONS FOR STEEL WASHERS ARE 1/2 BY 3 INCHES FOR PIPE 4,6,8 AND 10 INCHES IN DIAMETER AND 1/2 BY 3-1/2 INCHES FOR PIPE 12" IN DIA., HOLES SHALL BE 1/8 INCH LARGER THAN THE RODS.

FOR PIPE LARGER THAN 12" IN DIA., RESTRAINT DETAILS SHALL BE SUBMITTED FOR APPROVAL PRIOR TO INSTALLATION.

1. ALL TIE RODS, ROD COUPLINGS, TURNBUCKLES, BOLTS AND NUTS FOR THESE JOINTS SHALL BE OF CARBON STEEL EQUIVALENT TO A.S.T.M. A-307, GRADE B, WITH CADMIUM PLATING IN ACCORDANCE WITH A.S.T.M. A-165, EXCEPT THAT THE MIN. THICKNESS OF THE PLATING SHALL BE .0002 OF AN INCH. CADMIUM PLATED BOLTS SHALL HAVE CLASS 2A THREADS AND THE NUTS, ROD COUPLINGS AND TURNBUCKLES SHALL HAVE 2B THREADS.
2. HIGH STRENGTH, HEAT TREATED CAST IRON TEE-HEAD BOLTS WITH HEXAGON NUTS, ALL IN ACCORDANCE WITH THE STRENGTH REQUIREMENTS OF A.W.W.A. C-111, MAY BE USED IN LIEU OF THE CADMIUM PLATED BOLTS AND NUTS.
3. THE SKETCHES IN THIS SERIES OF FIGURES SHOW ACCEPTABLE METHODS OF PROVIDING ANCHORAGE. THERE IS NO PARTICULAR SIGNIFICANCE TO BE ATTACHED TO WHETHER THE SKETCH SHOWS A BELL AND SPIGOT JOINT OR A STANDARD MECHANICAL JOINT. THE ANCHORING PROCEDURE ILLUSTRATED APPLIES IN MOST CASES TO EITHER TYPE OF JOINT. IN SOME CASES, DIMENSIONS OF THE PARTICULAR PIPE OR HUB AND SPACE AVAILABLE FOR WORKING AROUND THE PARTICULAR JOINT WILL INFLUENCE THE CHOICE OF METHODS USED.
4. IN CERTAIN ASSEMBLIES OF RODS AND CLAMPS SHOWN, RODS RUN FROM A LUG ON THE FITTING (OR A CLAMP BEHIND THE HUB OF A BELL) TO A CLAMP AGAINST A FACE OF A BELL. NOTE THAT THIS ARRANGEMENT ANCHORS ONLY ONE JOINT. THE STABILITY OF THE JOINT WHERE THE CLAMP IS AGAINST THE FACE OF THE BELL DEPENDS ON HAVING SOIL ABOVE A RELATIVELY LONG PIECE OF PIPE ON BOTH SIDES OF THE JOINT. CONSEQUENTLY, IF THE DISTANCE BETWEEN THE FIRST AND SECOND JOINTS IS LESS THAN 12 FEET, THE SECOND JOINT SHOWN SHALL BE ANCHORED BY A CLAMP BEHIND THE HUB OF THE BELL AND RODS TO A CLAMP AT THE FACE OF THE NEXT BELL.
5. COATING TYPE: A.H.D ASPHALTIC PRIMER 719(A).-ALL EXPOSED METAL.

DETAIL NO. 302-2	MARICOPA ASSOCIATION of GOVERNMENTS STANDARD DETAIL	JOINT RESTRAINT WITH TIE RODS		DETAIL NO. 302-2

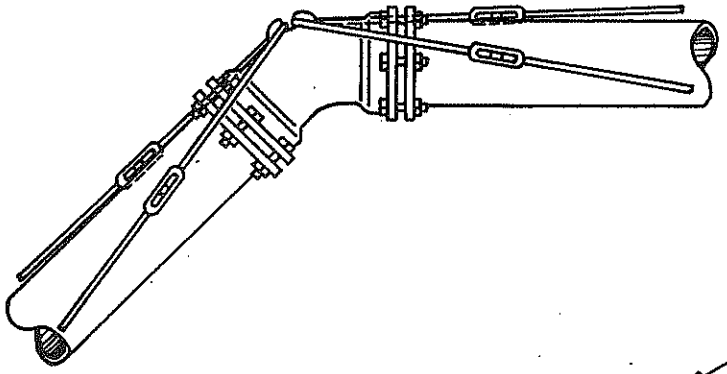

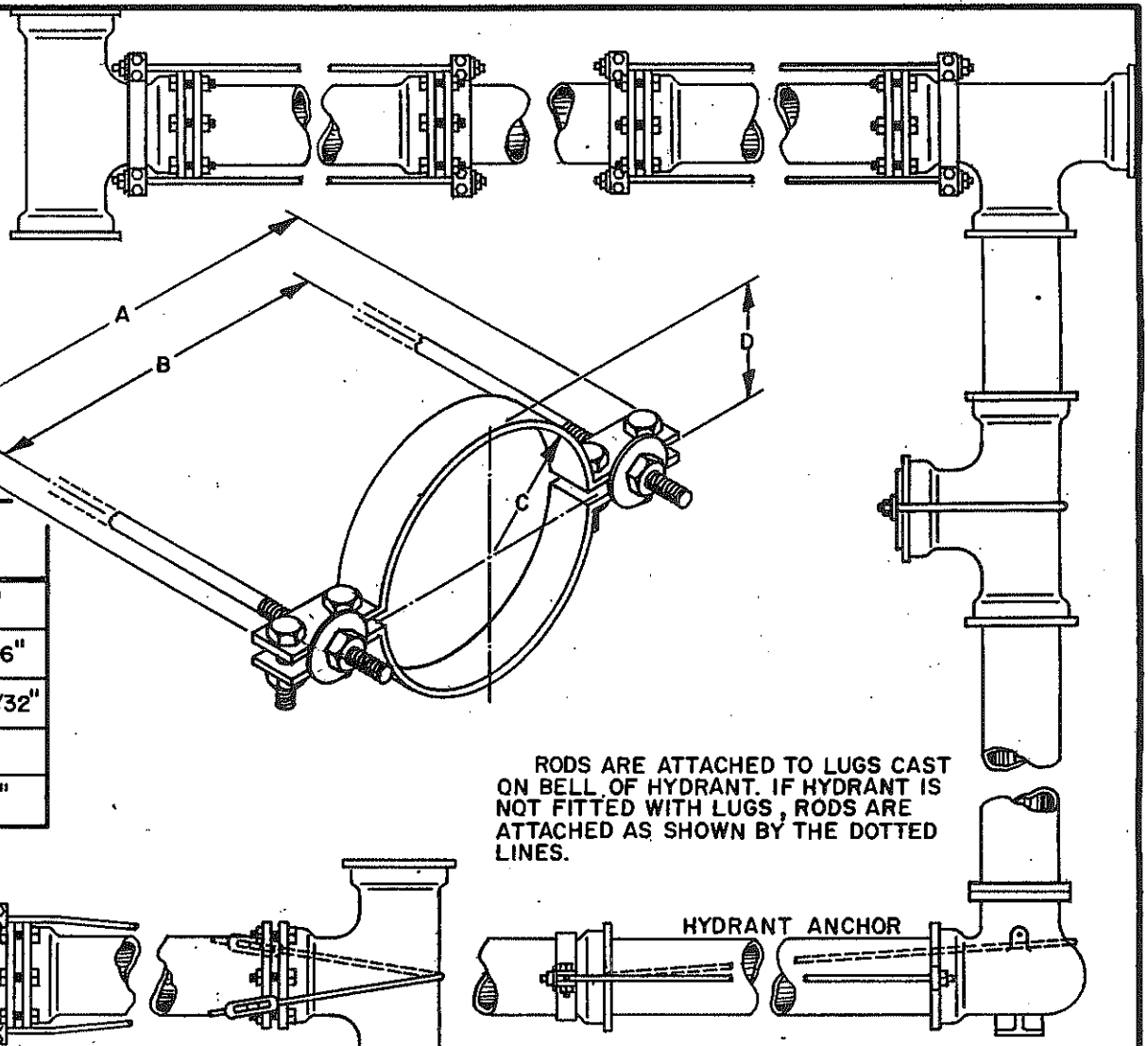

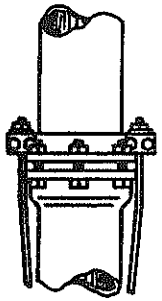

PIPE SIZE	A	B	C	D
4"	12-1/2"	10-1/8"	2-1/2"	1-3/4"
6"	14-1/2"	12-1/8"	3-9/16"	2-13/16"
8"	16-3/4"	14-3/8"	4-21/32"	3-29/32"
10"	19-1/16"	16-11/16"	5-3/4"	5"
12"	22-5/16"	19-3/16"	6-3/4"	5-7/8"

RODS ARE ATTACHED TO LUGS CAST ON BELL OF HYDRANT. IF HYDRANT IS NOT FITTED WITH LUGS, RODS ARE ATTACHED AS SHOWN BY THE DOTTED LINES.

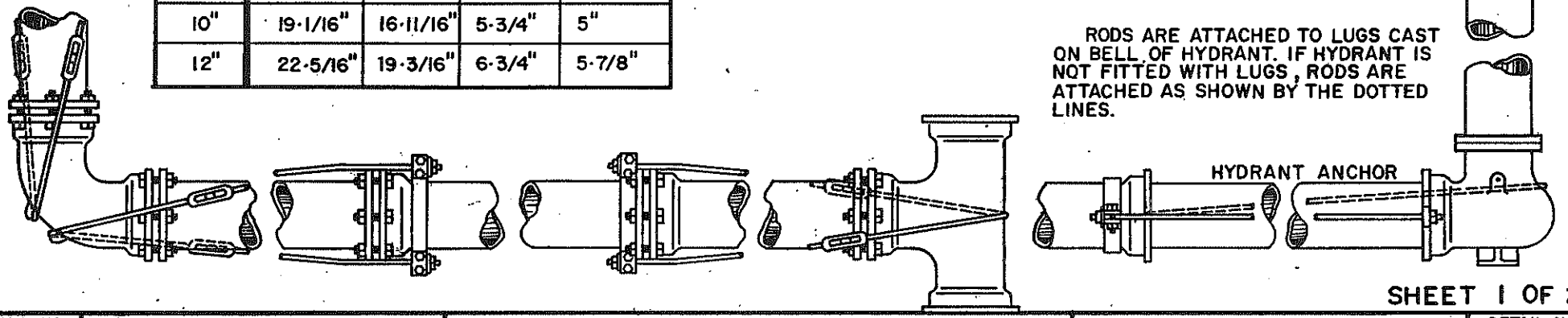

SHEET 1 OF 2

DETAIL NO. 302-1	MARICOPA ASSOCIATION of GOVERNMENTS STANDARD DETAIL	JOINT RESTRAINT WITH TIE RODS	DETAIL NO. 302-1

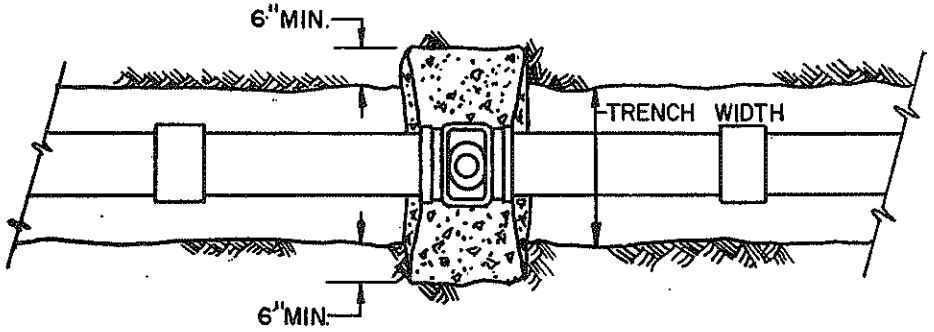

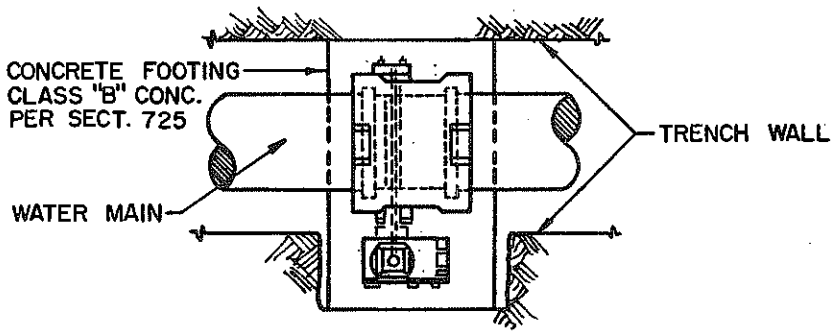

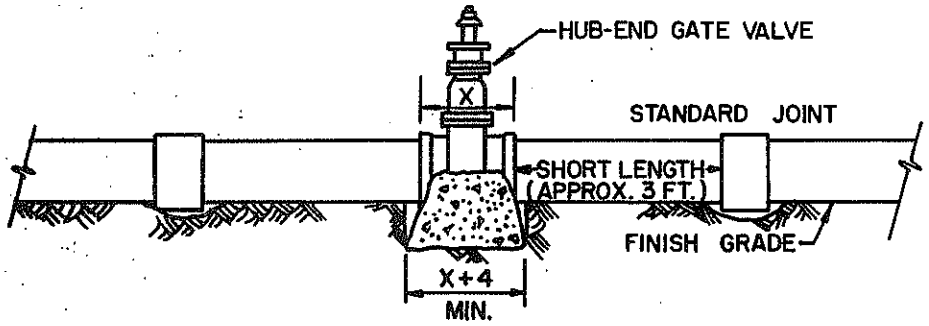

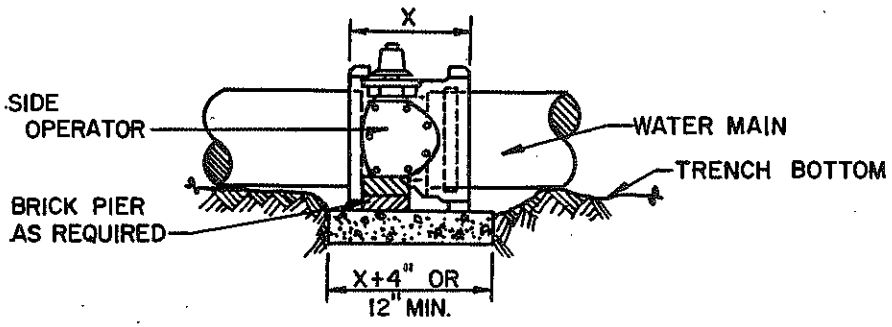

CLASS C CONCRETE AS PER SECTION 725
FORM AS REQUIRED TO KEEP CLEAR OF JOINTS.

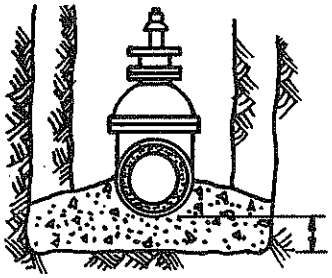

NOTE

THIS DETAIL COVERS WATER GATE VALVES, 4"TO 12" INCLUSIVE, REGARDLESS OF TYPE OF PIPE USED. LARGER LINES TO BE DETAILED ON PLANS.

WATER GATE VALVE

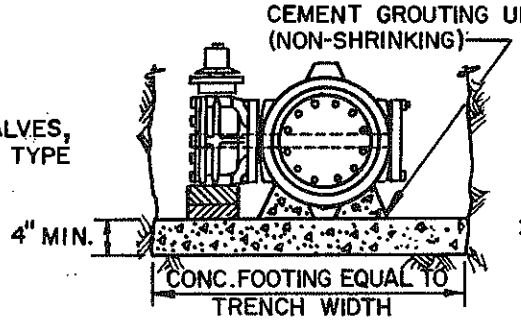

NOTES

1. THIS DETAIL COVERS BUTTERFLY VALVE INSTALLATION, 3" TO 12" INCLUSIVE, REGARDLESS OF TYPE OF PIPE OR JOINT USED. LARGER LINES TO BE DETAILED ON PLANS.
2. VALVE BOX AND COVER REQUIRED PER STD. DETAILS 270 AND 391.

BUTTERFLY VALVE

DETAIL NO. 301	MARICOPA ASSOCIATION of GOVERNMENTS STANDARD DETAIL	BLOCKING FOR WATER GATE AND BUTTERFLY VALVES		DETAIL NO. 301

REVISED 1998

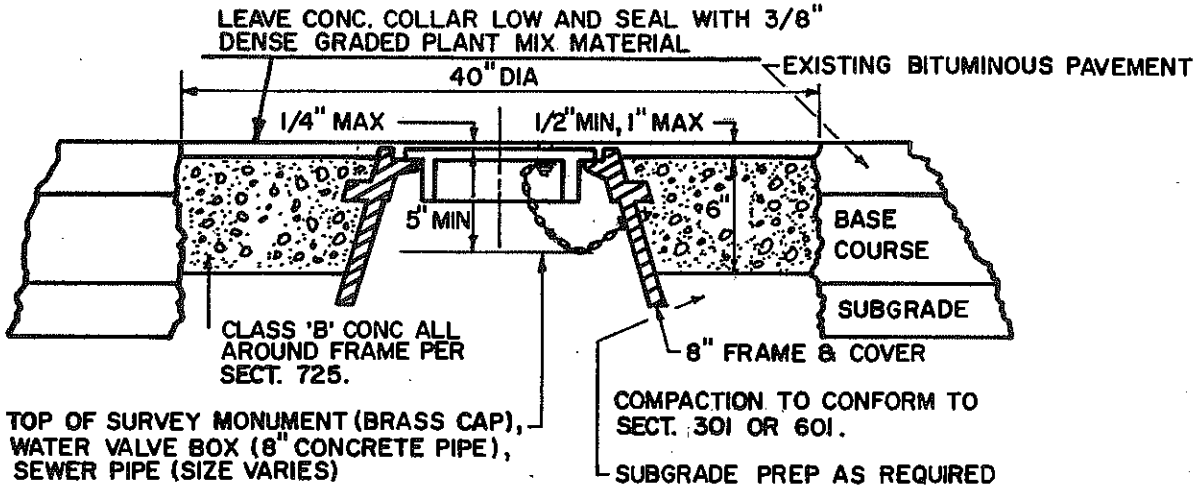

WATER VALVE, SURVEY MONUMENT, OR SEWER CLEAN OUT FRAME & GRADE ADJUSTMENT

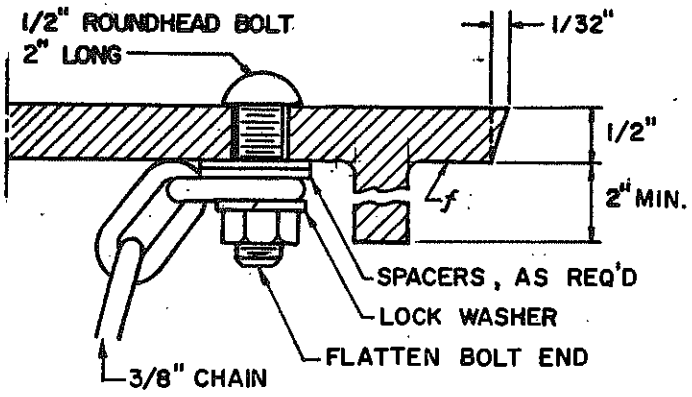

CASTING TO CONFORM TO SECT. 787. MINIMUM WEIGHT 16 LBS. FOR COVER

CHAIN ATTACHMENT (AS REQUIRED)

LETTERS ON COVER TO BE AS FOLLOWS: "SEWER", "WATER", OR "SURVEY" AS DIRECTED. TOTAL WIDTH OF WORD "SEWER" OR "WATER" 3-3/4". TOTAL WIDTH OF WORD "SURVEY" 4-1/2". LETTER SIZE 5/8" X 3/4", RAISED 1/16" ABOVE LEVEL OF COVER, TYPE OF LETTERS TO BE SUBMITTED FOR APPROVAL.

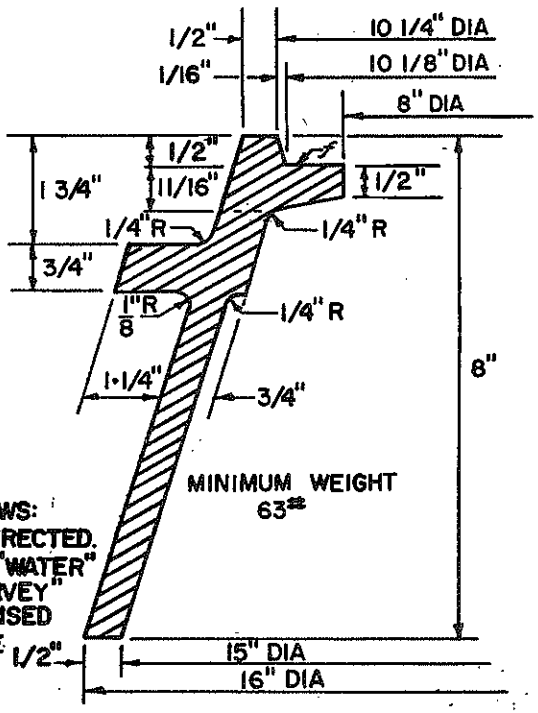

DETAIL TYPICAL FOR BOTH FRAME AND COVER

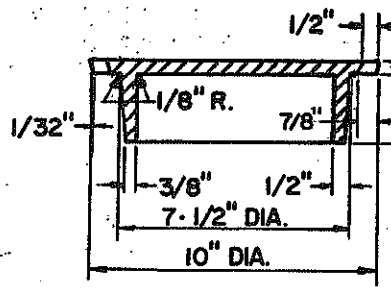

8" C.I. FRAME AND COVER

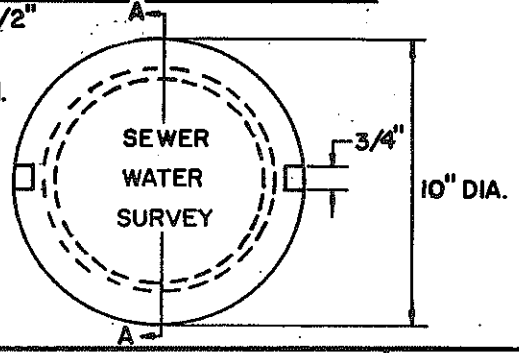

COVER SECTION A-A

DETAIL NO. 270	MARICOPA ASSOCIATION of GOVERNMENTS STANDARD DETAIL	FRAME AND COVER AND GRADE ADJUSTMENT		DETAIL NO. 270

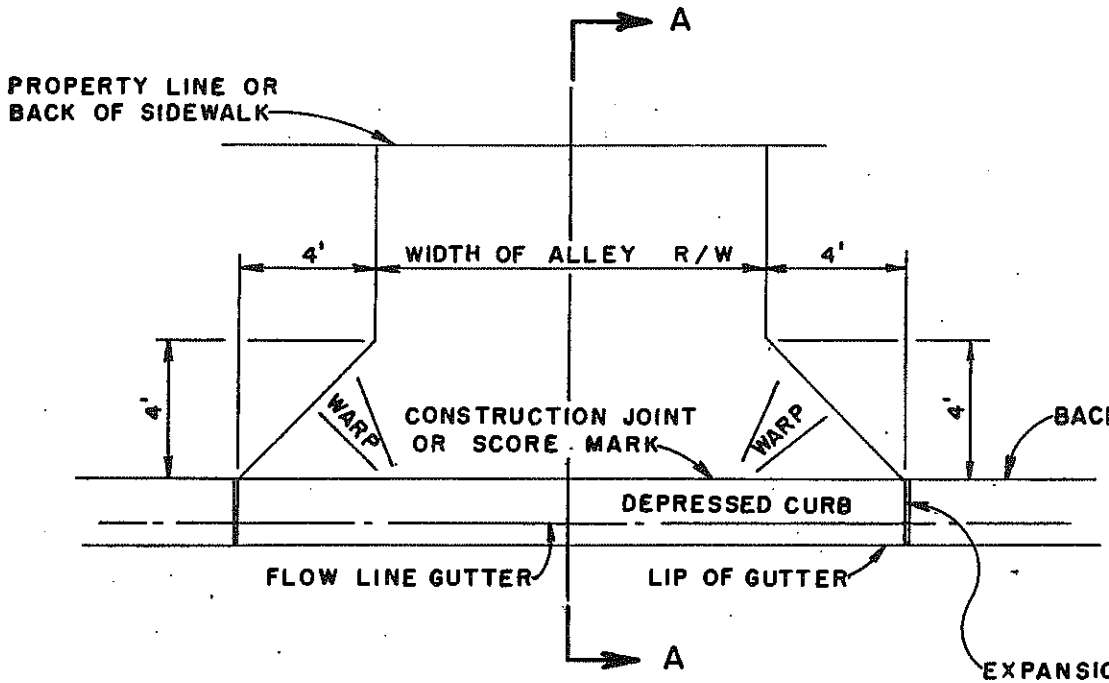

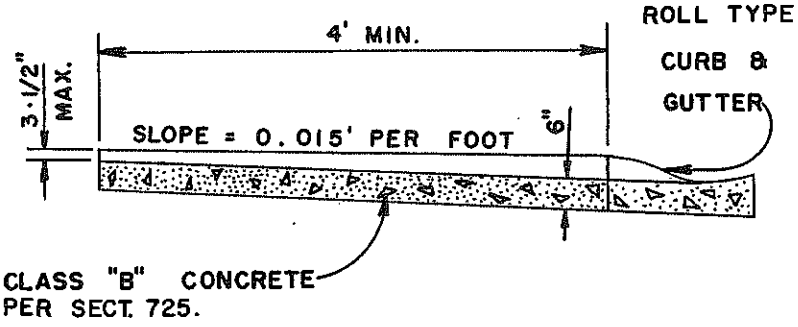

SECTION A-A

EXPANSION JOINT FILLER SHALL BE 1/2" BITUMINOUS TYPE PREFORMED EXPANSION JOINT FILLER, ASTM D-1751.

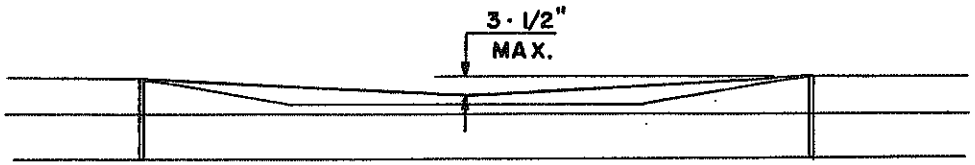

ELEVATION

DETAIL NO. 263	MARICOPA ASSOCIATION of GOVERNMENTS STANDARD DETAIL	WING TYPE ALLEY ENTRANCE (WITH ROLL TYPE CURB & GUTTER)		DETAIL NO. 263

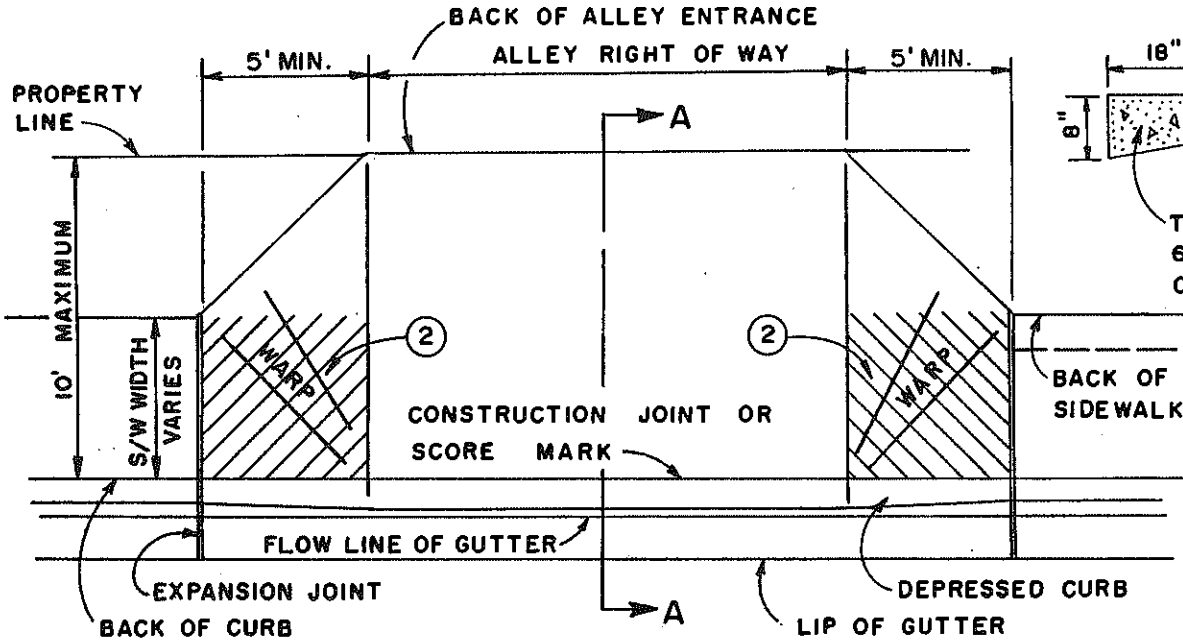

PLAN

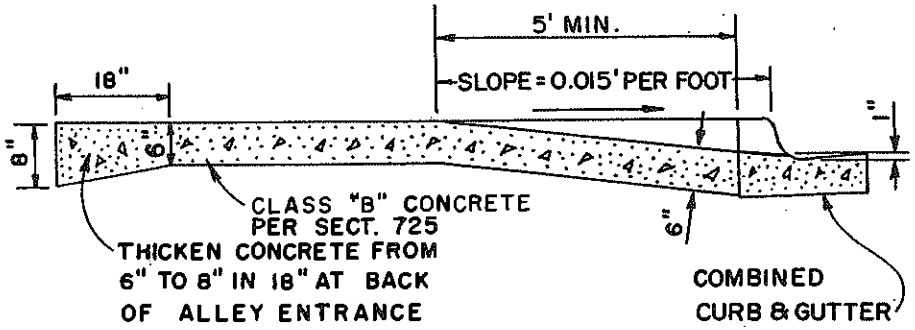

SECTION A-A

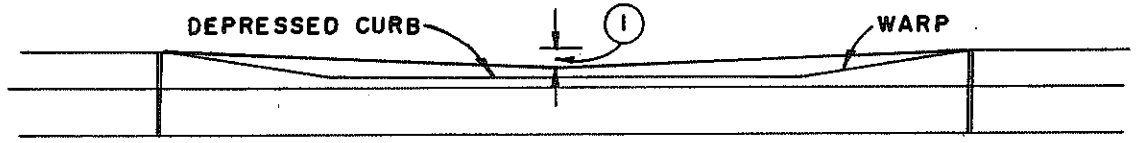

ELEVATION

NOTE

1. IF ALLEY ENTRANCE IS USED FOR DRAINAGE, THE CENTER BACK OF ALLEY ENTRANCE MAY BE DEPRESSED 2" FOR 4" CURB OR 3" FOR 6" CURB.
2. 1/4" GROOVES AT 1" O.C. FULL WIDTH OF 5' WARP SECTION, EACH SIDE OF ALLEY ENTRANCE. SEE DETAIL NO. 1 ON TYPE D RAMP DETAIL NO. 234.

DETAIL NO. 262	MARICOPA ASSOCIATION of GOVERNMENTS STANDARD DETAIL	WING TYPE ALLEY ENTRANCE (WITH COMBINED CURB & GUTTER)		DETAIL NO. 262

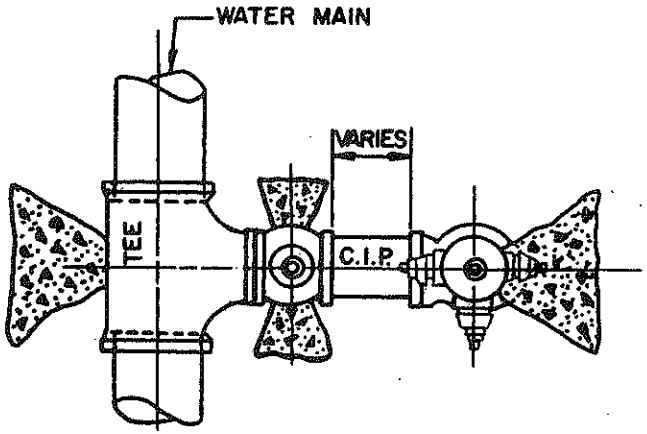

NOTES:

1. JOINTS BETWEEN THE VALVE AND THE MAIN SHALL BE FLANGED TYPE. JOINTS BETWEEN THE VALVE AND HYDRANT SHALL BE RESTRAINT OR MECHANICAL TYPE.
2. 90° BEND NOT REQUIRED IF SUFFICIENT ROOM FOR PERPENDICULAR INSTALLATION.
3. FOR CONCRETE THRUST BLOCKS SEE STD. DETAIL 380
4. A FLANGE JOINT BY MECHANICAL JOINT VALVE MAY BE USED AS THE TRANSITION BETWEEN THE JOINT TYPES.
5. SEE STANDARD DETAIL 362 FOR LOCATION OF HYDRANT.

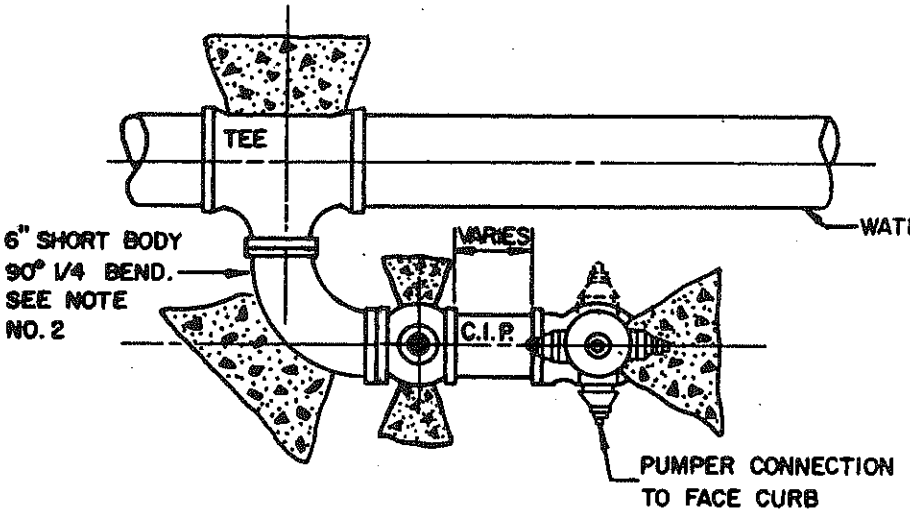

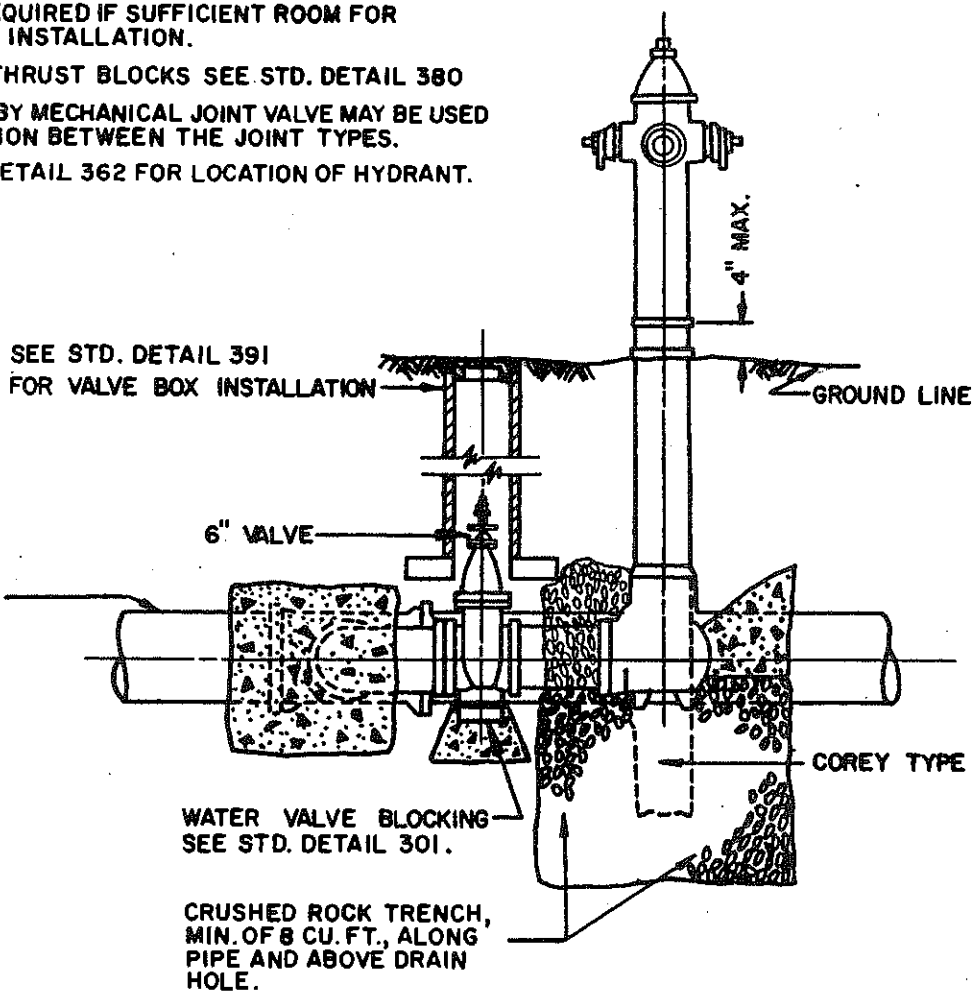

DETAIL NO. 360	MARICOPA ASSOCIATION of GOVERNMENTS STANDARD DETAIL	FIRE HYDRANT INSTALLATION	DETAIL NO. 360

NOTES

1. OBSTRUCTIONS SUCH AS UTILITY POLES, STREET SIGNS, IRRIGATION BOXES, FENCES, ETC., MUST NOT BE PLACED BETWEEN CURB AND HYDRANT.
2. * RADIUS VARIES BY MUNICIPALITY.
3. DIMENSIONS SHOWN ON CONSTRUCTION DRAWINGS SUPERSEDE LOCATIONS SHOWN HERE.
4. ON LOCATIONS IN MIDBLOCK, THE FIRE HYDRANT WILL BE ALIGNED WITH A PROPERTY LINE.

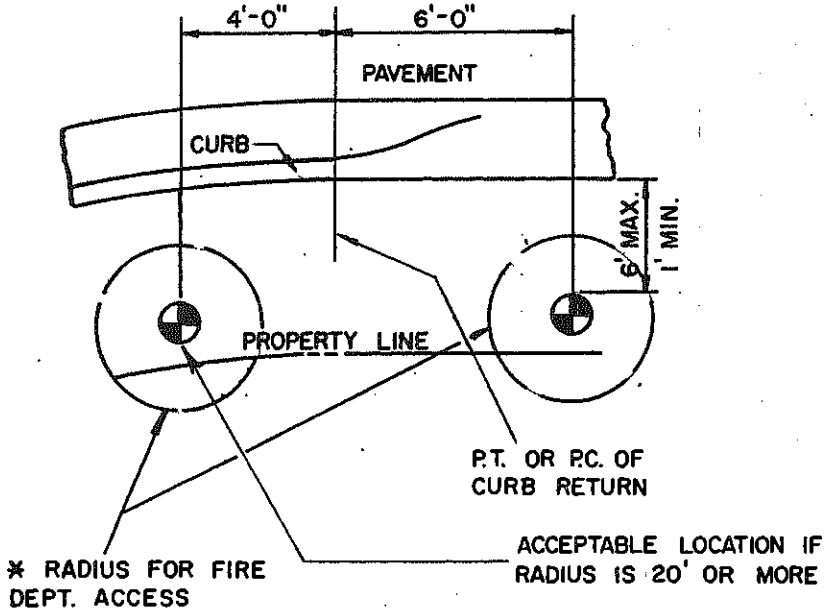

PARKWAY AREA OR NO SIDEWALK

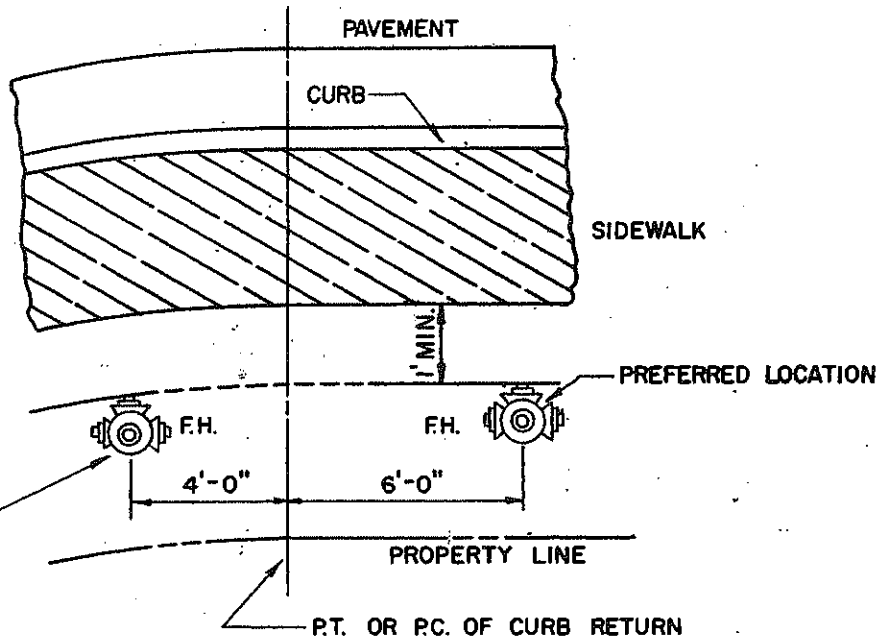

AREA WITH SIDEWALK

DETAIL NO. 362	MARICOPA ASSOCIATION of GOVERNMENTS STANDARD DETAIL	LOCATIONS FOR NEW FIRE HYDRANTS		DETAIL NO. 362

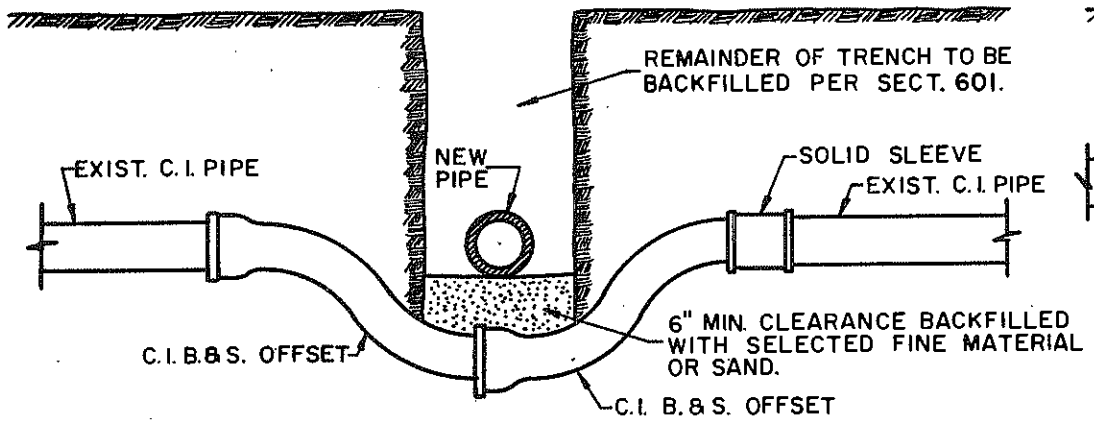

45° CAST IRON BENDS MAY BE USED IN PLACE OF CAST IRON OFFSETS, AS SHOWN

CAST IRON

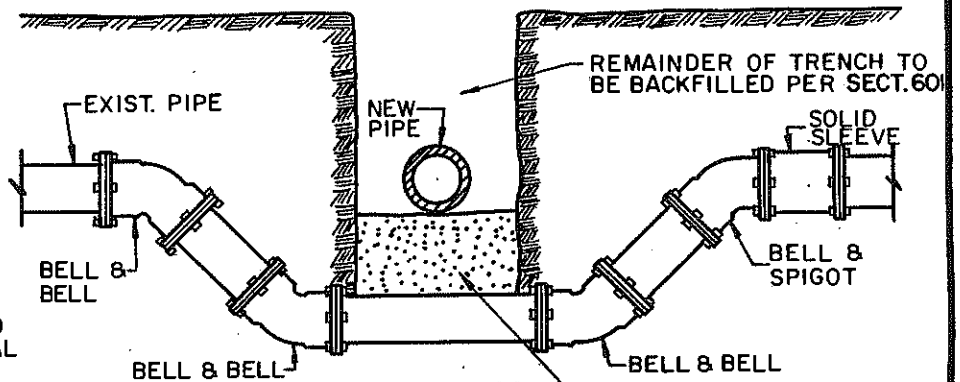

CAST IRON MECHANICAL JOINT

DROP SECTION IS TO BE PREFABRICATED AND INSTALLED AS A SINGLE UNIT.

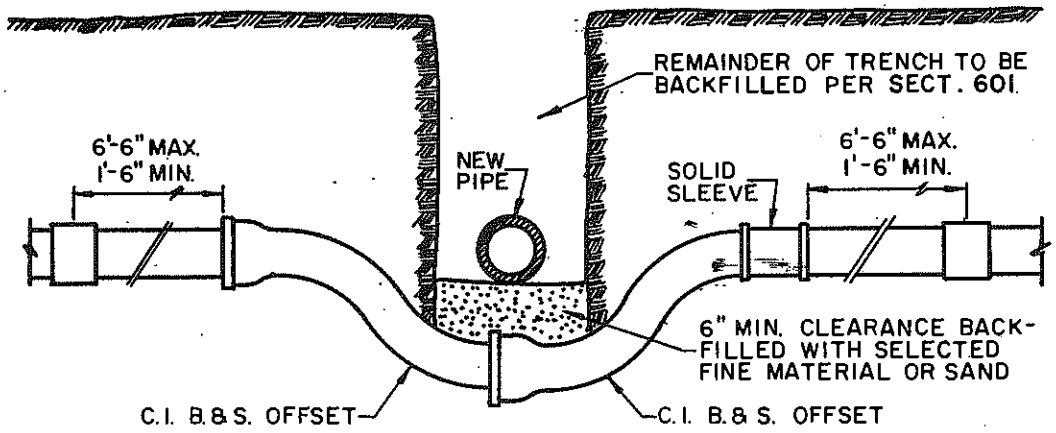

ASBESTOS CEMENT

NOTES:

1. THIS DETAIL COVERS MOVING OF WATER MAINS, 2" TO 12" ONLY.
2. THRUST BLOCKING AS PER STD. DET. 380.& 381. .
3. IF OFFSET IS TO GO OVER OBSTRUCTION, JOINT RESTRAINTS MUST BE USEO.
4. PIPE IS TO BE CAST IRON OR DUCTILE IRON.

DETAIL NO. 370	MARICOPA ASSOCIATION of GOVERNMENTS STANDARD DETAIL	VERTICAL REALIGNMENT OF WATER MAINS		DETAIL NO. 370

TYPICAL LOCATIONS OF THRUST BLOCKS

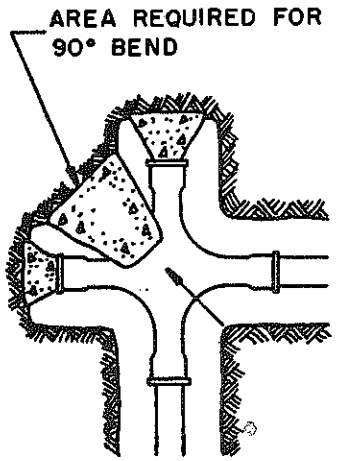

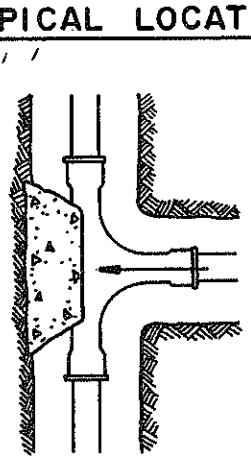

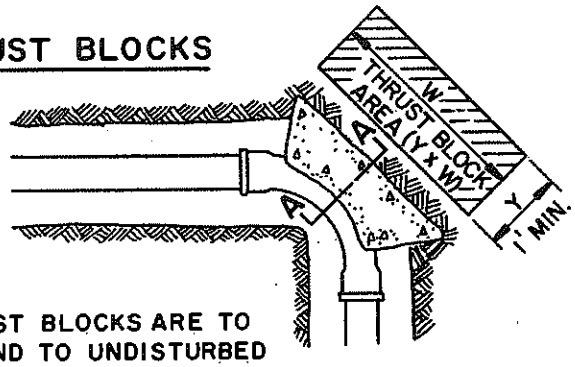

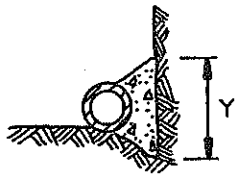

SECTION A-A

NOTE: THRUST BLOCKS ARE TO EXTEND TO UNDISTURBED GROUND. CONCRETE TO BE CLASS C, SECT. 725.

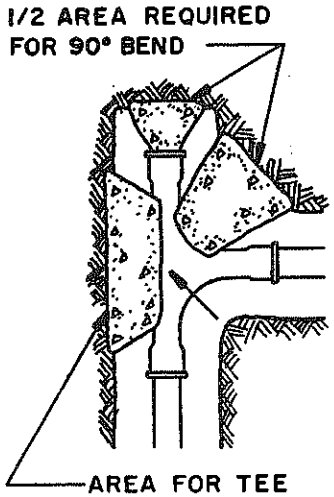

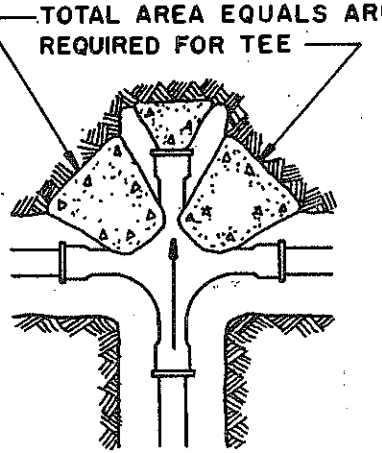

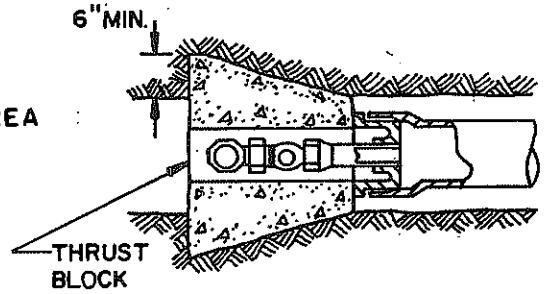

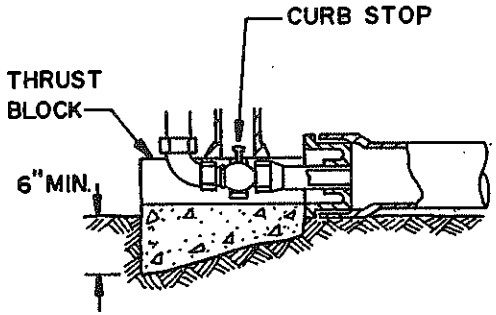

MINIMUM THRUST BLOCK AREA REQUIRED (Y x W)		
PIPE SIZE	WATER PIPE	
	TEE, DEAD END, 90° BEND	45° & 22½° BENDS
4" & LESS	3 SQ. FEET	3 SQ. FEET
6"	4 " "	3 " "
8"	6 " "	3 " "
10"	10 " "	5 " "
12"	14 " "	7 " "
16"	24 " "	12 " "

NOTES:

1. TABLE IS BASED ON 200 PSI TEST PRESSURE AND 3000 #/SQ. FT. SOIL. IF CONDITIONS ARE FOUND TO INDICATE SOIL BEARING IS LESS, THE AREAS SHALL BE INCREASED ACCORDINGLY.
2. AREAS FOR PIPE LARGER THAN 18" SHALL BE CALCULATED FOR EACH PROJECT.
3. FORM ALL NON-BEARING VERTICLE SURFACES.

DETAIL NO. 380	MARICOPA ASSOCIATION of GOVERNMENTS STANDARD DETAIL	THRUST BLOCKS FOR WATER LINES		DETAIL NO. 380

REVISED 1998

NOTE

BARS TO CONCRETE THRUST BLOCK TO BE COATED WITH 2 COATS COAL TAR, EPOXY OR BY OTHER APPROVED METHOD. BARS TO HAVE 90° HOOK ON LOWER END, AS PER TABLE.

PIPE SIZE	MIN. BAR SIZE	"A"-DIMENSION (HOOK)	MIN. * BLOCK DIM.
6"	#6	6"	3'x3'x3'
8"	#6	9"	4'x4'x2.5'
12"	#8	9"	4'x5'x5'

* FOR 125 PSI WORKING PRESSURE

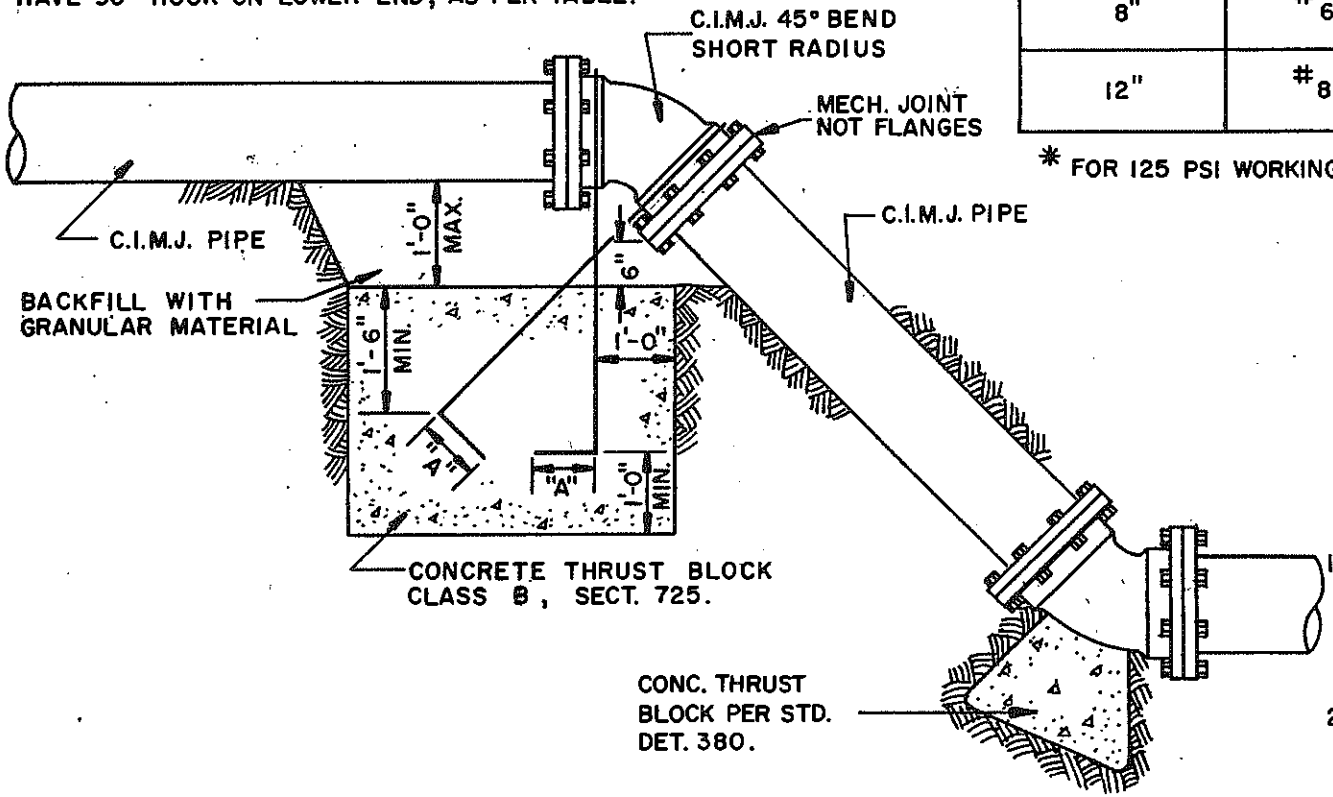

NOTES

1. EITHER THIS DETAIL OR RESTRAINT RODS CAN BE USED WHEN IT IS ALLOWED TO RELOCATE A WATER LINE UPWARD OR DOWNWARD TO CROSS A CONFLICT.
2. DUCTILE IRON PIPE MAY BE USED.

DETAIL NO. 381	MARICOPA ASSOCIATION of GOVERNMENTS STANDARD DETAIL	ANCHOR BLOCKS FOR VERTICAL BENDS	DETAIL NO. 381

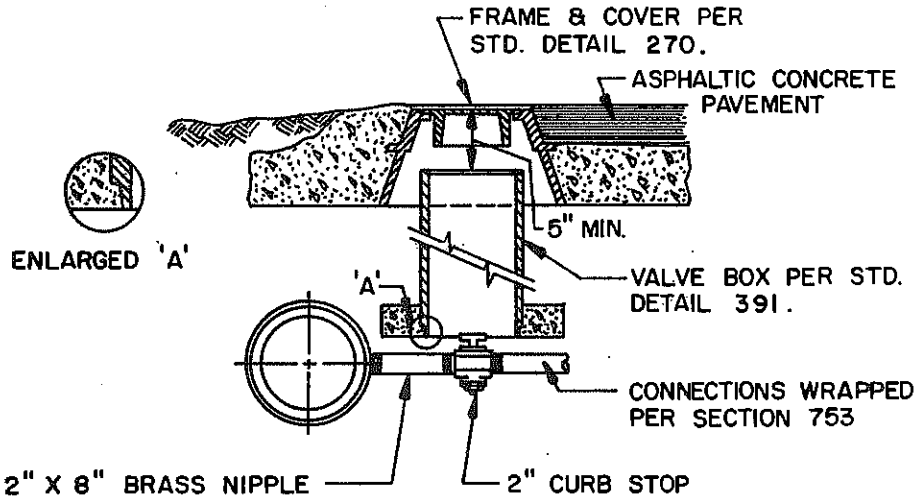

TYPE 'A'

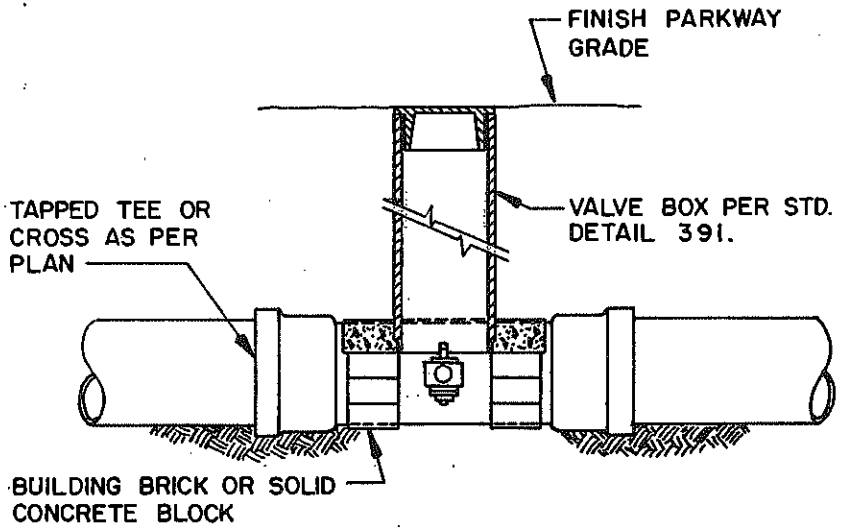

TYPE 'B'

NOTES

1. CURB STOP TO BE MUELLER ORISEAL (H-10283), FORD BALL VALVE B11-777, HAYES BULLETIN 400, J. JONES (J-1900) OR APPROVED EQUAL.
2. REDUCER MAY BE USED WHEN CONNECTING TO SMALLER GALVANIZED PIPE.
3. THIS DETAIL IS TO BE USED WHEN CONNECTING EXIST. GALVANIZED PIPE TO ASBESTOS CEMENT PIPE OR CAST IRON PIPE.

NOTE

1. VALVE BOX TO BE SUPPORTED ON BRICKS TO PREVENT VERTICAL LOADS FROM BEING TRANSMITTED TO THE SMALL PIPE.

DETAIL NO. 389	MARICOPA ASSOCIATION of GOVERNMENTS STANDARD DETAIL	CURB STOP WITH VALVE BOX & COVER		DETAIL NO. 389

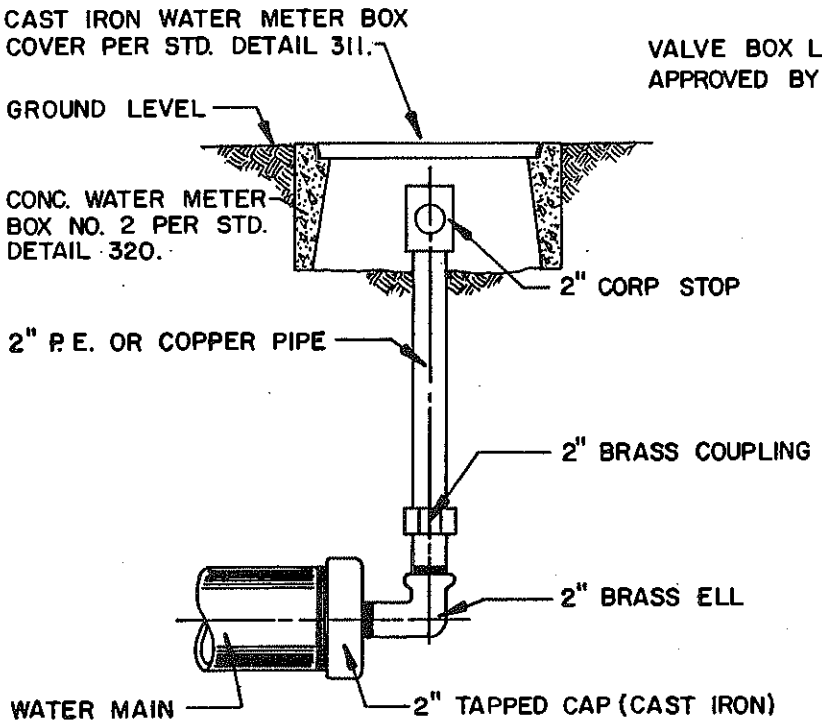

TYPE 'A'

VALVE BOX LOCATION MAY VARY IF APPROVED BY THE CITY ENGINEER

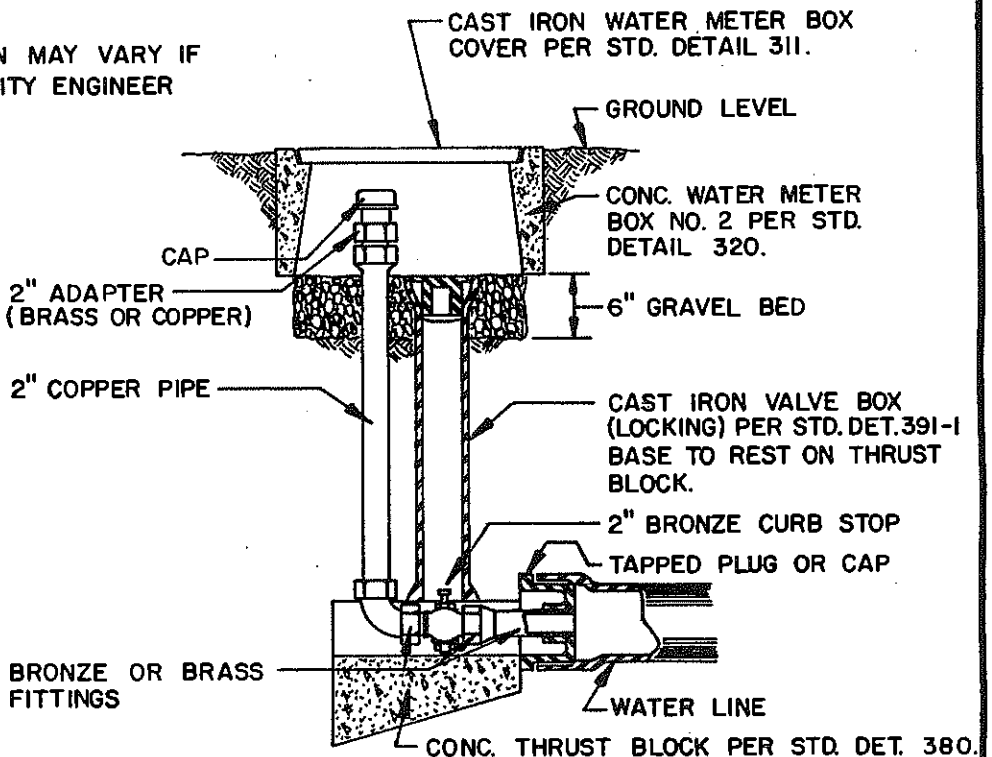

TYPE 'B'

DETAIL NO. 390	MARICOPA ASSOCIATION of GOVERNMENTS STANDARD DETAIL	CURB STOP WITH FLUSHING PIPE		DETAIL NO. 390

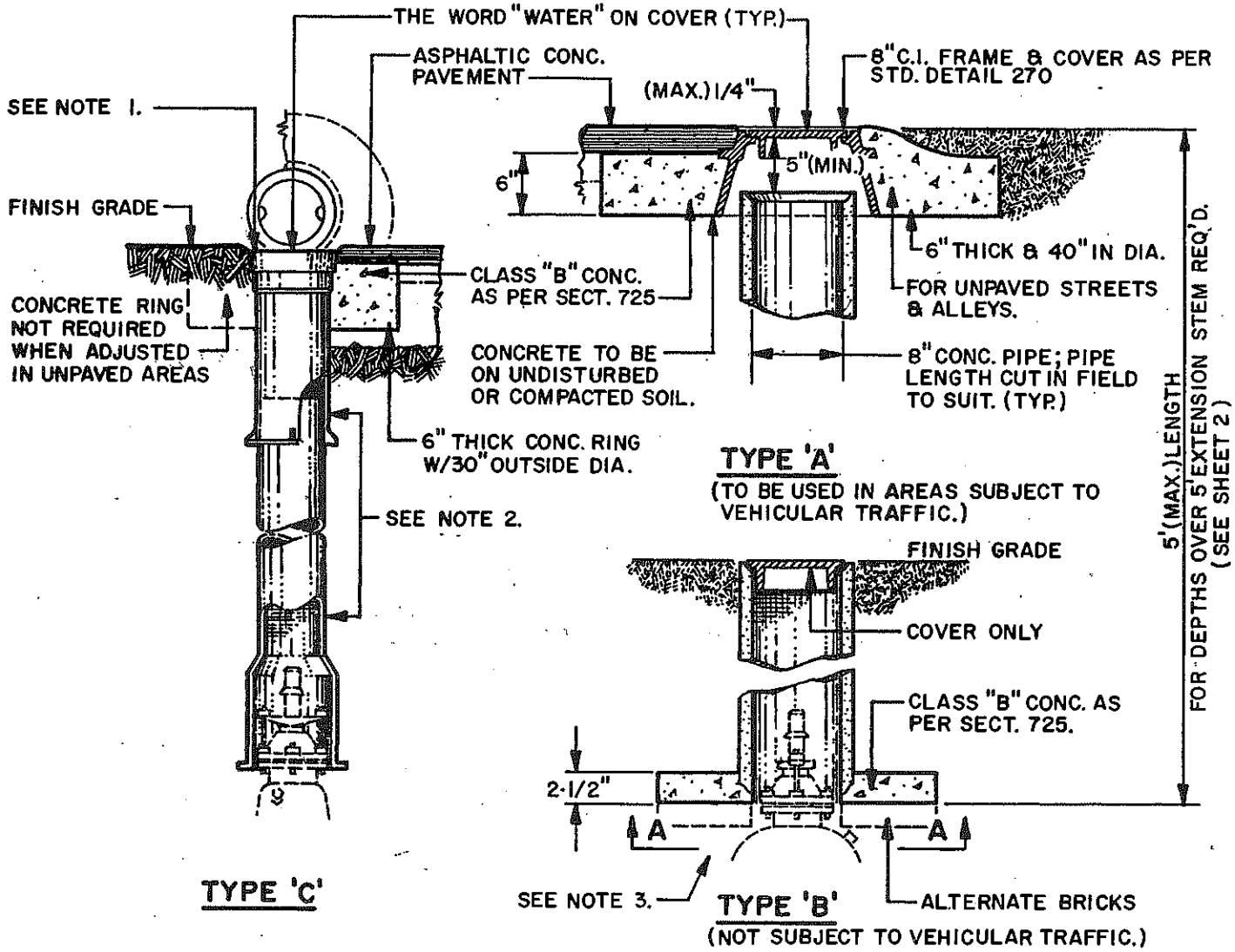

NOTES

1. VALVE BOX SHALL BE ADJUSTED TO THE FINISHED GRADE PRIOR TO PLACING OF THE ASPHALTIC CONCRETE SURFACE.
2. USE PARKSON TYLER, APCO, OR EQUAL DEEP SKIRTED LID (4" OR MORE) TYPE, SLIDING ADJUSTABLE CAST IRON VALVE BOX. C.I. MIN. T.S. 30,000 P.S.I.
3. GROUND BELOW CONCRETE PAD OR 3 BRICKS TO BE COMPACTED 95% OF MAX. DENSITY.

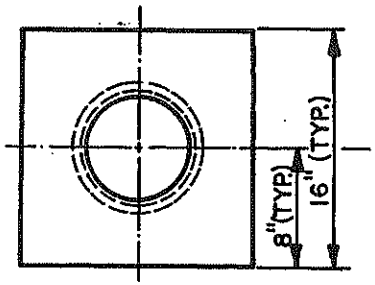

VIEW A-A

SHEET 1 OF 2

DETAIL NO.			DETAIL NO.
391-1	MARICOPA ASSOCIATION of GOVERNMENTS STANDARD DETAIL	VALVE BOX INSTALLATION AND GRADE ADJUSTMENT	391-1

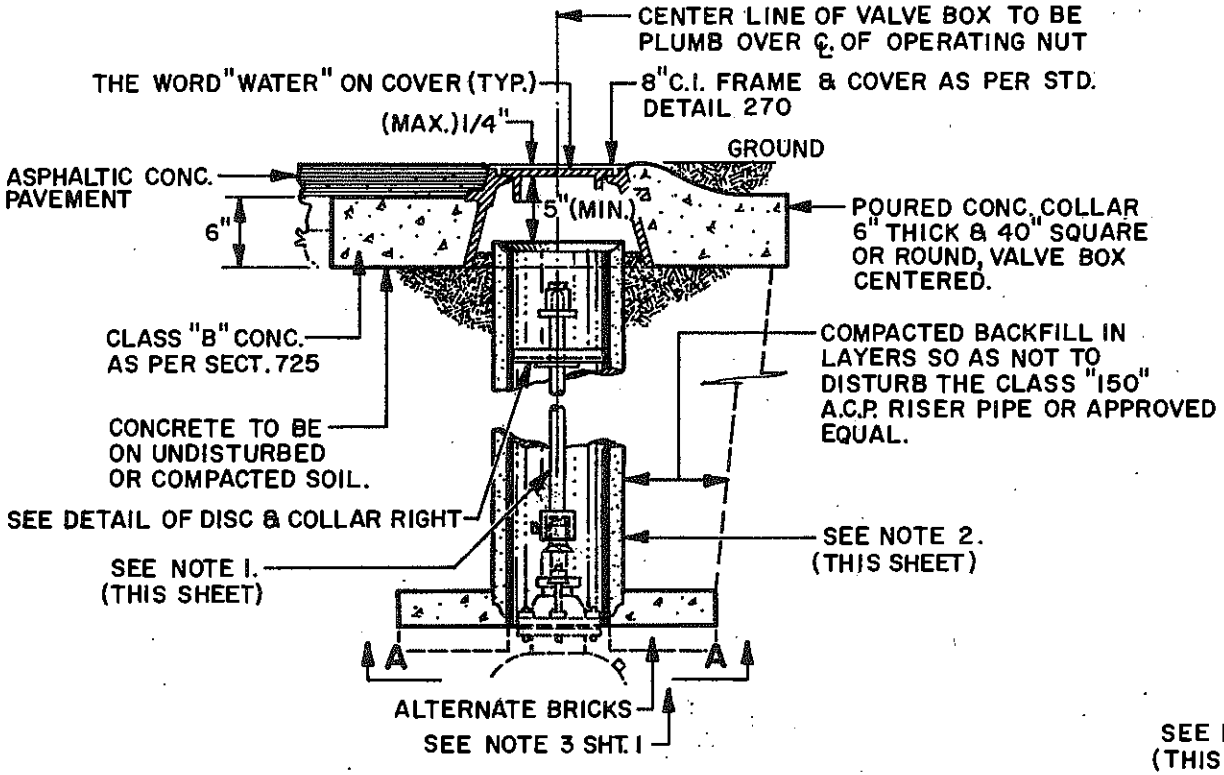

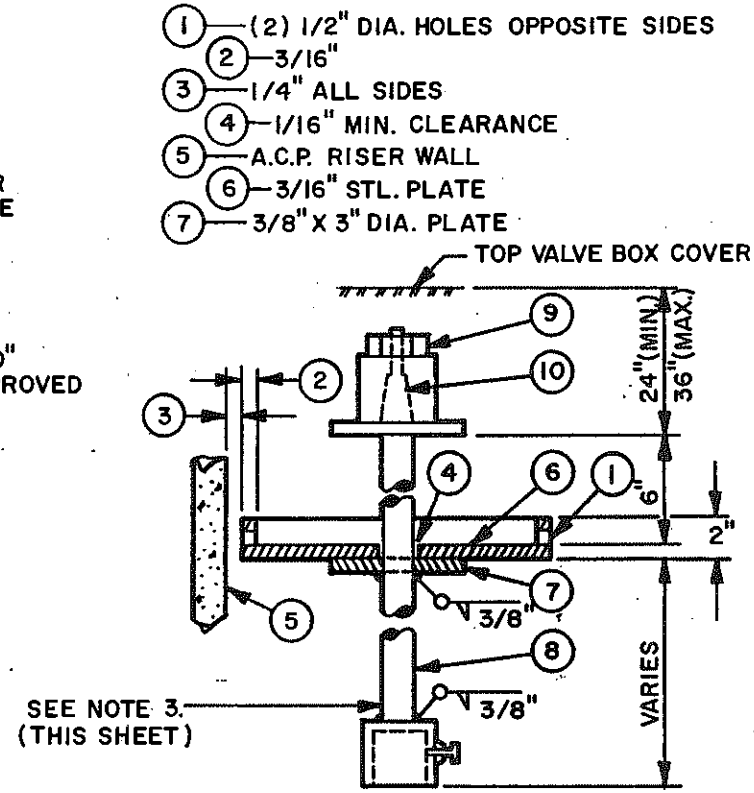

8 — MIN. ROD SIZE 1-1/4" DIA. STL. DESIG. A-15

9 — 2" SQUARE OPER. NUT TO BE HELD DOWN WITH NUT ON THREADED SHAFT AS STD. VALVE STEM NUT ATTACHMENT.

10 — THIS PART OF STEM SQUARE WITH 4 SIDES TAPERED.

NOTES

1. EXTENSION STEM: WITH SQUARE SOCKET ON BOTTOM TO FIT 2" SQUARE VALVE NUT. EXTENSION TO VALVE STEMS REQUIRED ON ALL VALVES INSTALLED WHERE OPERATING NUT IS OVER 5' BELOW SURFACE. LENGTH TO FIT EACH INSTALLATION. OPERATING NUT TO BE HELD ON TOP OF EXTENSION WITH STOP NUT.
2. IF TWO OR MORE JOINTS OF A.C.P. ARE USED TO MAKE RISER USE STANDARD A.C. PIPE RUBBER GASKET COUPLING TO JOIN PIPE. WHERE RISER LENGTH EXCEEDS 10' USE 12" A.C. PIPE
3. STEM PAINTING: ALL STEEL TO HAVE PRIME COAT OF PAINT NO. 1-D AND ONE HEAVY APPLICATION (FINISH COAT) OF PAINT NO. 9 AS PER SECT. 790.

DETAIL NO. 391-2	MARICOPA ASSOCIATION of GOVERNMENTS STANDARD DETAIL	VALVE BOX INSTALLATION		DETAIL NO. 391-2

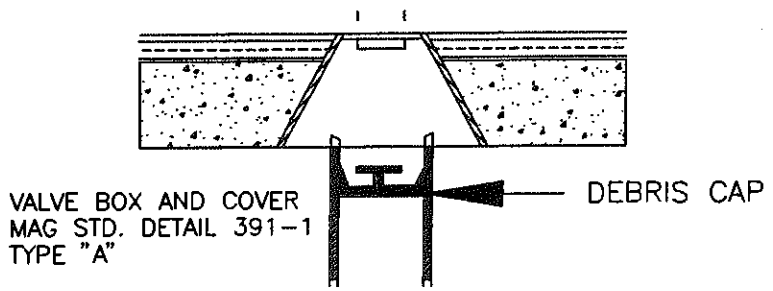

TYPE "A"

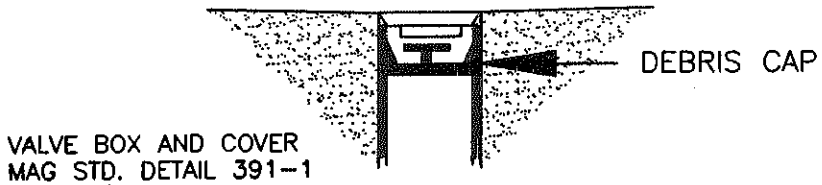

TYPE "B"

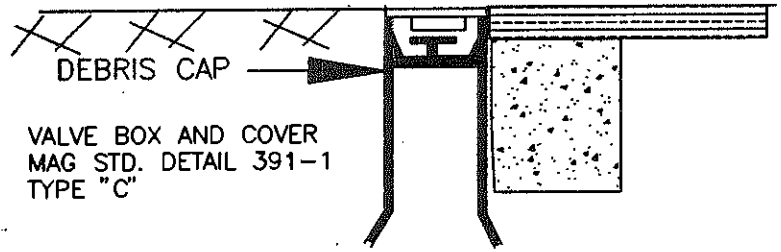

TYPE "C"

NOTES

1. THE DEBRIS CAP SHALL BE DESIGNED AND INSTALLED TO PREVENT DEBRIS SUCH AS DIRT, DUST, SAND ETC., FROM PASSING AROUND THE CAP AND DOWN INTO THE VALVE HOUSING. THE CAP SHALL BE HELD IN PLACE BY A MECHANISM WHICH WILL NOT DAMAGE THE VALVE HOUSING. ONCE INSTALLED THE CAP MUST WITHSTAND, WITHOUT SLIPPAGE, A MINIMUM VERTICAL FORCE OF 50 POUNDS, AT A LOADING RATE OF 1.0 IN./MINUTE.
2. THE CAP SHALL BE MANUFACTURED OF CORROSIVE RESISTANT MATERIALS.
3. DEBRIS CAP SHALL BE INSTALLED AS CLOSE UNDER THE CAST IRON COVER WITHOUT INTERFERING WITH COVER OPERATION.
4. THE CAP SHALL BE CAPABLE OF SECURELY HOLDING A STANDARD LOCATING COIL, "SCOTCH MARK" 4 DISK MARKER BY 3M OR EQUAL.
5. THE CAP SHALL BE CONSTRUCTED TO ALLOW THE DEVICE TO BE SECURED BY A LOCK. THE LOCK (PAD, BARREL, ETC.) SHALL BE SUPPLIED BY THE AGENCY.
6. THE HANDLE AND/OR BODY OF THE CAP SHALL BE INTEGRALLY COLORED IF REQUIRED BY THE AGENCY. IF REQUIRED THE COLOR SHALL CONFORM TO THE ONE CALL LOCATING SERVICE (BLUE STAKE) COLORS (ARS 40-360.21)
7. THE CAP SHALL BE INSTALLED IN ALL VALVE HOUSINGS AS REQUIRED BY THE CONTRACT DOCUMENTS OR BY THE AGENCY'S POLICIES.
8. THE DEBRIS CAP SHALL BE MANUFACTURED BY SW SERVICES, INC., PHOENIX, ARIZONA OR EQUAL.

REVISED 04-12-95

DETAIL NO. 392	MARICOPA ASSOCIATION of GOVERNMENTS STANDARD DETAIL	DEBRIS CAP INSTALLATION		DETAIL NO. 392

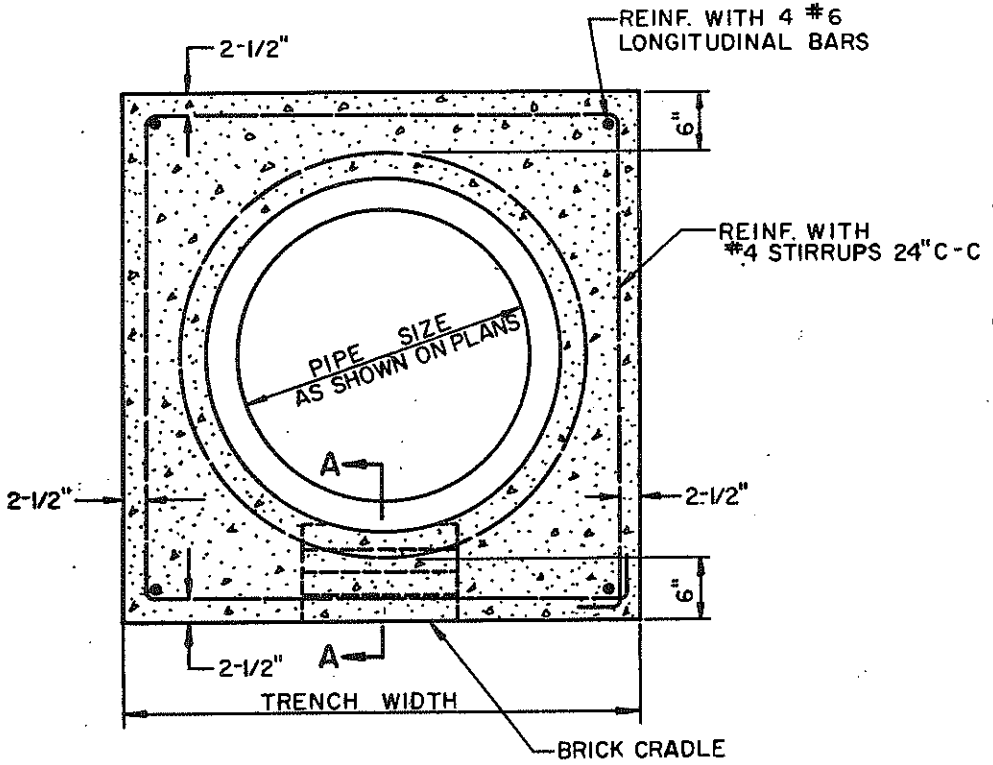

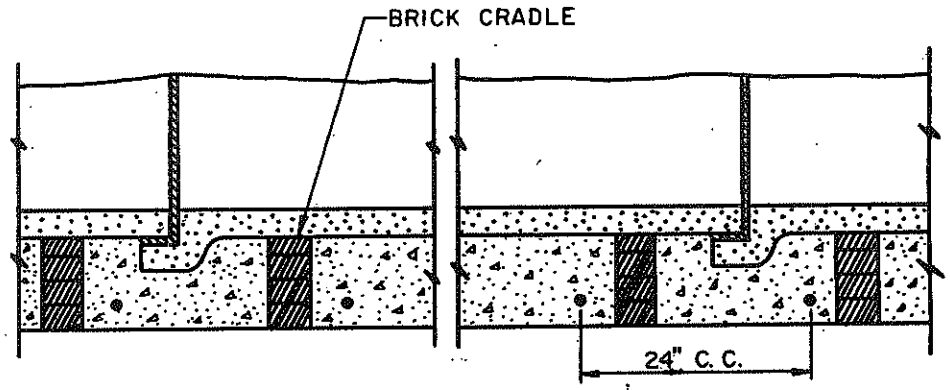

SECTION A-A

NOTES

1. LAY PIPE TO LINE AND GRADE ON BRICK CRADLE.
2. PLACE CLASS "C" CONC. PER SECT. 725 & 505, IN SUCH A MANNER AS NOT TO FLOAT THE PIPE.

DETAIL NO. 402	MARICOPA ASSOCIATION of GOVERNMENTS STANDARD DETAIL	ENCASED PIPE FOR CANAL CROSSINGS		DETAIL NO. 402

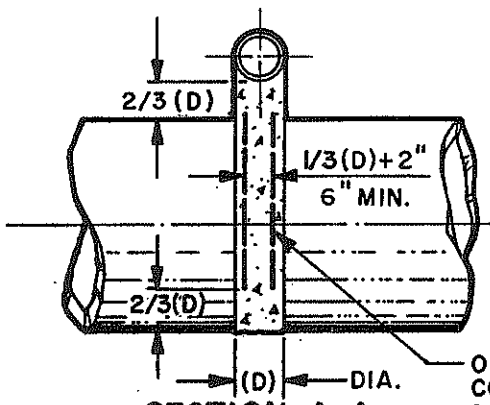

SECTION A-A

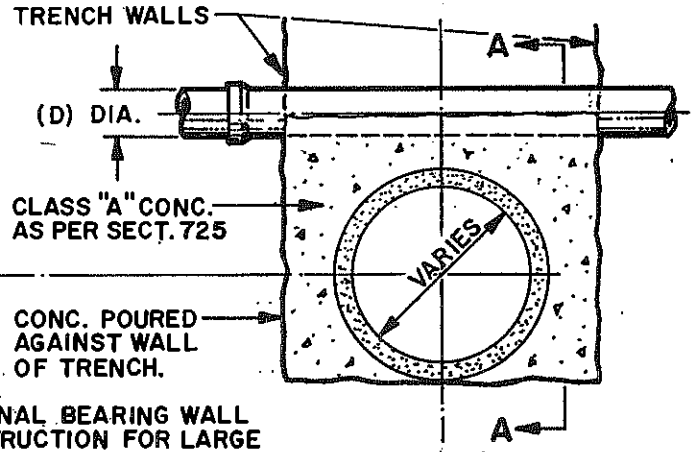

PIPE CONDUIT

OPTIONAL BEARING WALL CONSTRUCTION FOR LARGE DIAMETER (D) PIPE TO BE FORMED IN TRENCH.

TYPE "A"

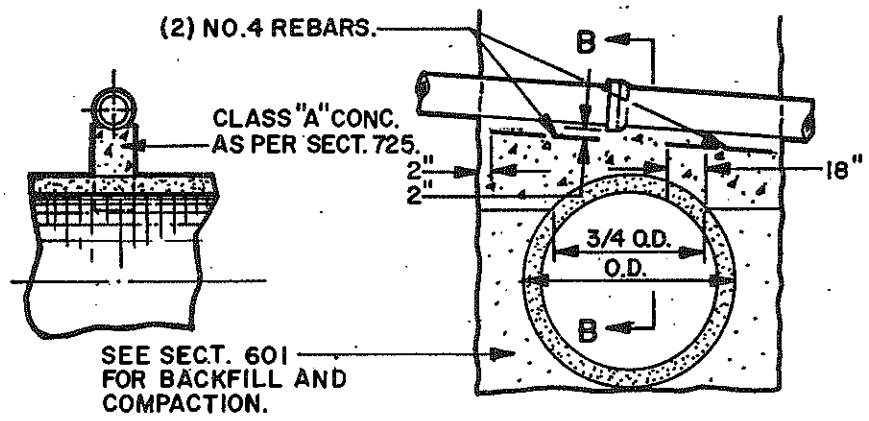

SECTION B-B

TYPE "B"

NOTES

1. TYPE "A" PIPE SUPPORT MAY BE USED FOR ANY TYPE CROSSING CONDITION.
2. TYPE "C" PIPE SUPPORT MAY BE USED FOR CROSSING PIPES WITH A BELL DIAMETER OF 18" OR LESS IF SUFFICIENT CLEARANCE OVER STORM SEWER IS AVAILABLE AND TOTAL SPAN IS LESS THAN 34'.
3. INTERMEDIATE PIPE SUPPORT SHALL BE USED IN CONJUNCTION WITH TYPE "C" PIPE SUPPORT IF TOTAL SPAN EXCEEDS MAX. 'W' IN TABLE.
4. THE CONTRACTOR SHALL BE RESPONSIBLE FOR FURNISHING ALL SUPPORTS BOTH PERMANENT AND TEMPORARY. TEMPORARY SUPPORTS SHALL NOT BE A SEPARATE PAY ITEM.
5. PERMANENT PIPE SUPPORTS MAY BE DECREASED FROM PLAN QUANTITIES, OR EXTENDED TO INCLUDE SOME LISTED BELOW AS TEMPORARY SUPPORTS IF CONDITIONS WARRANT THESE CHANGES AT THE TIME OF CONSTRUCTION. DECISION SHALL BE MADE BY THE ENGINEER.
6. WHEN TYPE "A" PIPE SUPPORT IS USED AND WHENEVER SO DIRECTED BY THE ENGINEER, THE CONTRACTOR SHALL PIERCE THE WALL WITH SUITABLE OPENINGS TO PREVENT UNEQUAL PRESSURE RESULTING FROM FLOODING OF THE BACKFILL. THE VOLUME OF THE PIERCED OPENING SHALL NOT EXCEED 1/2 THE VOLUME OF THE SUPPORTING WALL.
7. USE TYPE "B" PIPE SUPPORT INSTEAD OF TYPE "C" WHEN CLEARANCE IS LESS THAN 'Y' IN TABLE, BETWEEN PIPES.

SCHEDULE OF REQUIRED SUPPORTS

PERMANENT	TEMPORARY
SEWER LINES	CAST IRON PIPE CONC. IRRIG. PIPE BURIED TELCO. GAS PIPES CONC. STORM DRAIN CONC. BOX CULVERT TRAFFIC CONTROL CONDUIT WATER & SEWER LINES

NOTE: OTHER UTILITIES AS NOTED ON THE PLANS OR AS REQUIRED BY THE ENGINEER AT TIME OF CONSTRUCTION.

DETAIL NO. 403-1	MARICOPA ASSOCIATION of GOVERNMENTS STANDARD DETAIL	PIPE SUPPORTS ACROSS TRENCHES		DETAIL NO. 403-1

TABLE				
'W'	DEPTH OF COVER ON SUPPORTS			
	0' TO 8'		8' TO 16'	
	BAR NO.	Y	BAR NO.	Y
TO 6'	5	8"	6	11"
7'	5	9"	6	12"
8'	5	10"	6	13"
9'	6	11"	6	14"
10'	6	12"	7	15"
11'	6	13"	7	16"
12'	6	14"	7	17"
13'	7	15"	7	19"
14'	7	16"	8	20"
15'	7	17"	8	21"
16'	7	18"		
17'	8	19"		

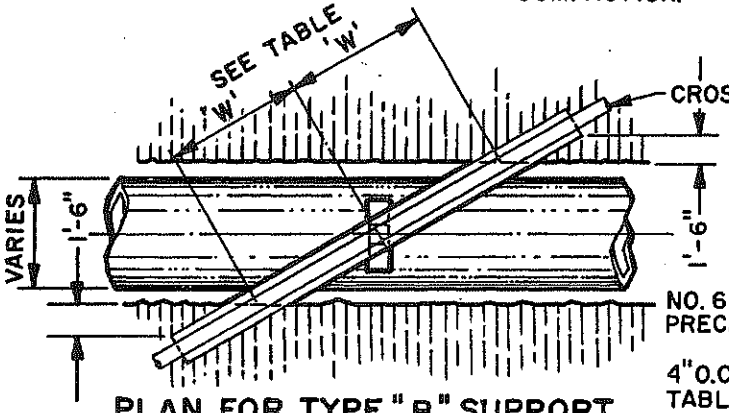

PLAN FOR TYPE "B" SUPPORT

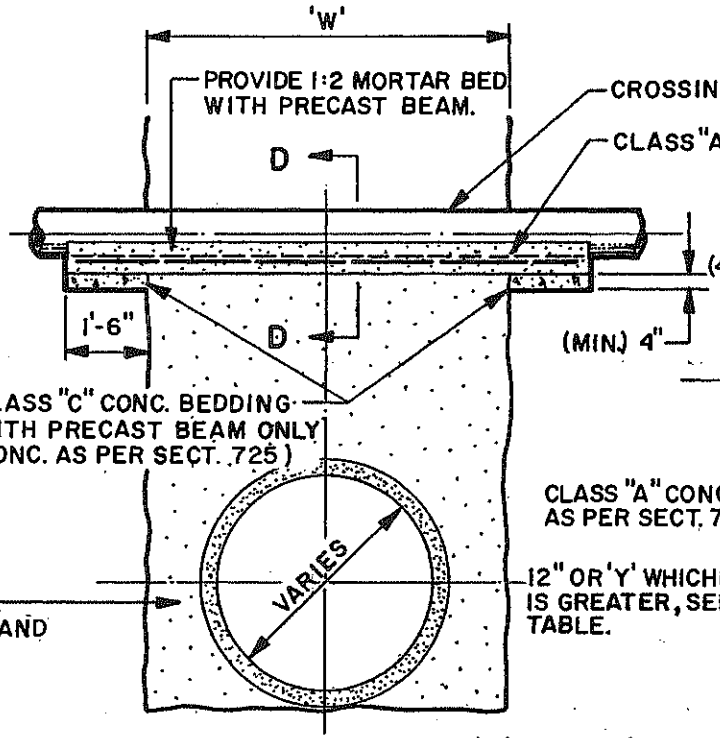

TYPE "C"

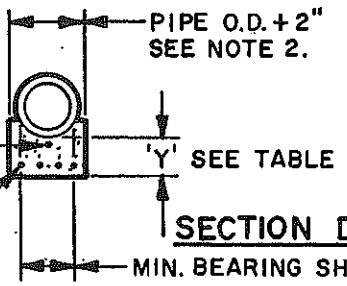

SECTION D-D

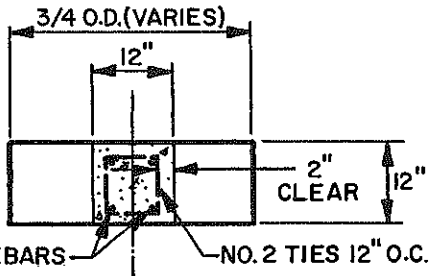

SECTION C-C

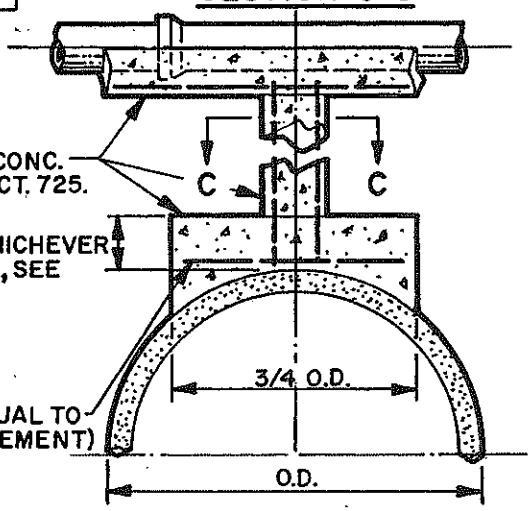

INTERMEDIATE SUPPORT FOR TYPE "B" CROSSINGS

SHEET 2 OF 2

DETAIL NO. 403-2	MARICOPA ASSOCIATION of GOVERNMENTS STANDARD DETAIL	PIPE SUPPORTS ACROSS TRENCHES	DETAIL NO. 403-2

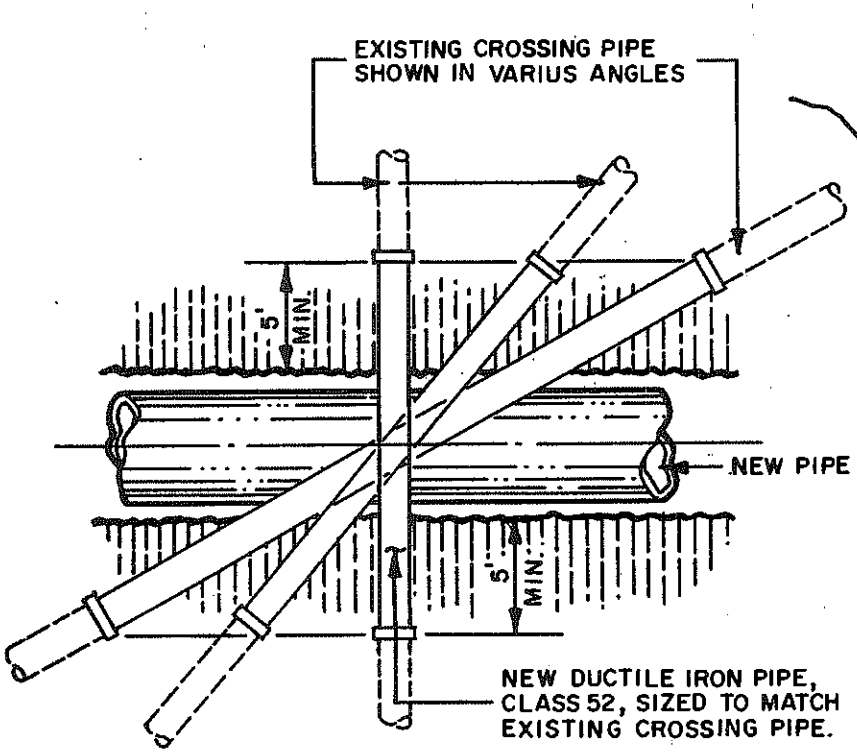

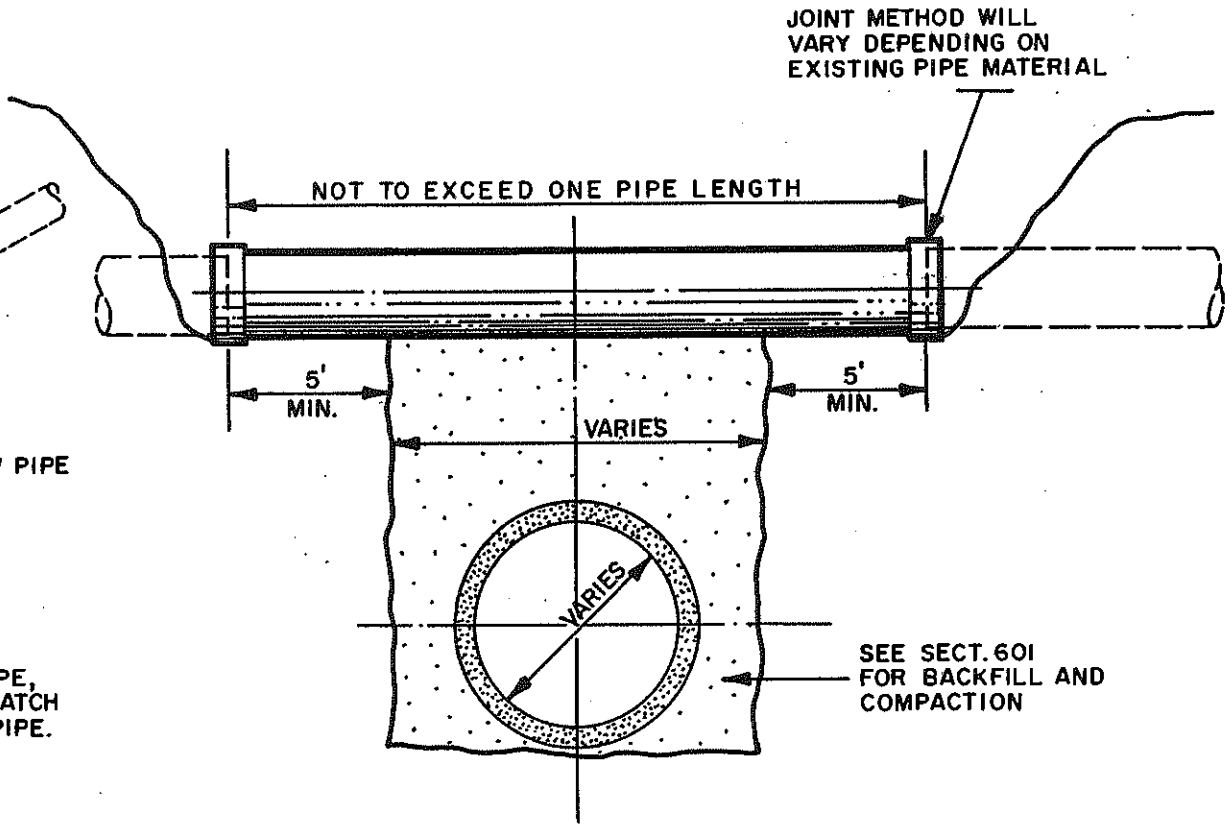

DETAIL NO. 403-3	MARICOPA ASSOCIATION of GOVERNMENTS STANDARD DETAIL	ALTERNATE TO PIPE SUPPORT	DETAIL NO. 403-3

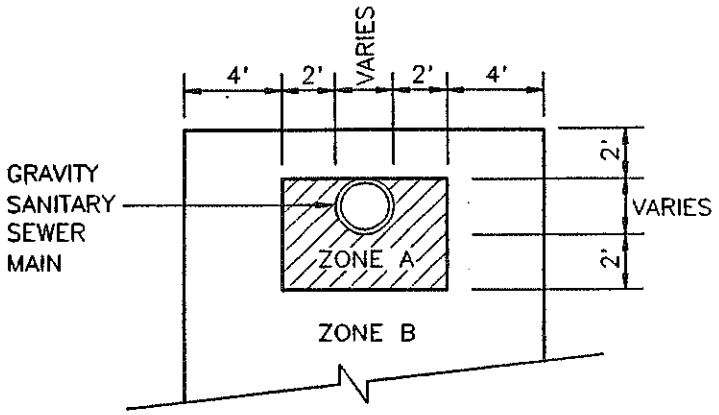

CROSS SECTION DETAIL FOR
GRAVITY SANITARY SEWER

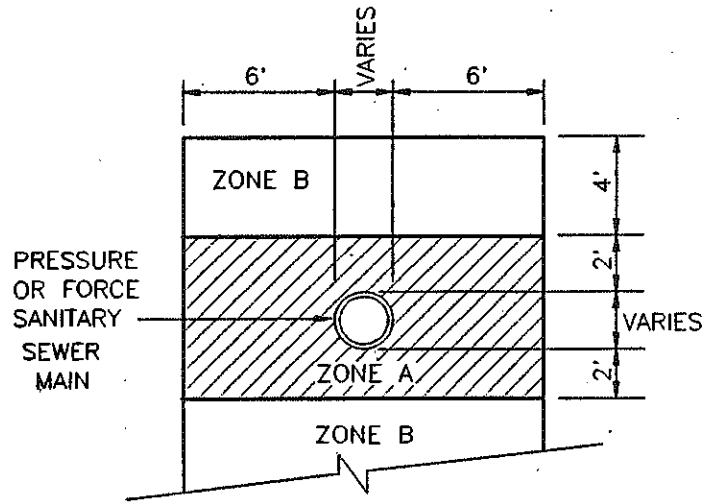

CROSS SECTION DETAIL FOR
PRESSURE OR FORCE SANITARY SEWER

NOTES:

1. SEPARATION DISTANCES AND/OR OTHER EXTRA PROTECTION SHALL BE REQUIRED TO PROTECT WATER MAINS FROM CONTAMINATION BY SANITARY SEWER MAINS.
2. THIS CRITERIA APPLIES TO PARALLEL MAINS AS WELL AS CROSSINGS.
3. SEE CROSS SECTION DETAIL FOR LIMITS OF SEPARATION/EXTRA PROTECTION. ALL DISTANCES ARE MEASURED PERPENDICULARLY FROM THE OUTSIDE OF THE PIPES.
   A. NO WATER MAINS SHALL FALL WITHIN ZONE A.
   B. EXTRA PROTECTION WILL BE REQUIRED WHEN THE WATER MAIN FALLS WITHIN ZONE B. EXTRA PROTECTION SHALL CONSIST OF CONSTRUCTING THE SANITARY SEWER MAIN WITH MECHANICAL JOINT OR RESTRAINED JOINT DUCTILE IRON PIPE FOR A DISTANCE OF TEN FEET ON EITHER SIDE OF THE WATER MAIN. THE DUCTILE IRON PIPE SHALL COMPLY WITH THE AGENCY'S REQUIREMENTS FOR SEWER INSTALLATION. IN THE CASE OF A CROSSING, THE NUMBER OF JOINTS SHALL BE HELD TO A MINIMUM WITH ONE FULL JOINT OF PIPE CENTERED OVER/UNDER THE OTHER. AN ALTERNATE PROTECTION MAY CONSIST OF ENCASING BOTH PIPES IN CONCRETE AS SHOWN HEREIN.
   C. NO ADDITIONAL PROTECTION WILL BE REQUIRED OUTSIDE OF THE ZONE A AND B.
4. SEPARATION REQUIREMENTS FOR 4" OR 6" INDIVIDUAL HOUSE SERVICE CONNECTIONS SHALL COMPLY WITH THE AGENCY'S PLUMBING CODES.
5. RECLAIMED WATER SHALL BE CONSIDERED AS POTABLE WATER WHEN PLACED NEXT TO A SANITARY SEWER AND CONSIDERED A SANITARY SEWER WHEN PLACED NEXT TO A POTABLE WATER MAIN.

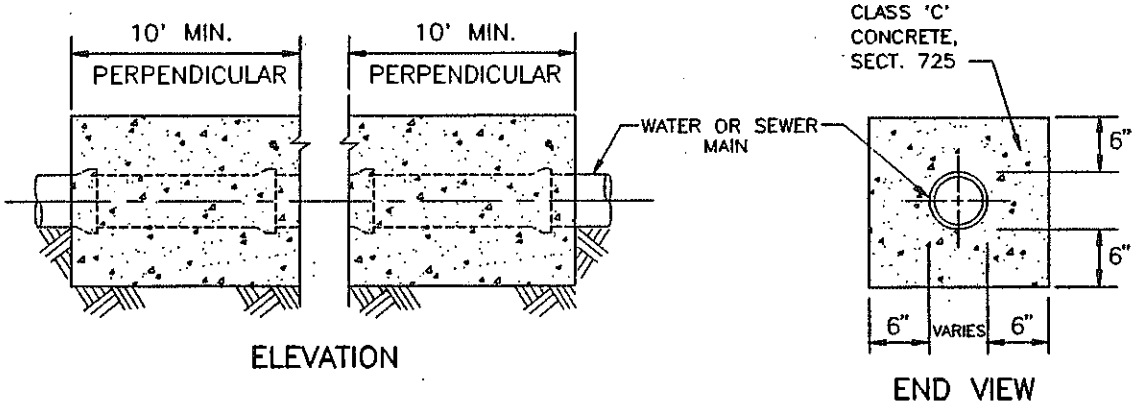

ELEVATION

END VIEW

ENCASEMENT FOR PARALLEL PIPES

DETAIL NO. 404-1	MARICOPA ASSOCIATION of GOVERNMENTS STANDARD DETAIL	WATER AND SANITARY SEWER SEPARATION/PROTECTION		DETAIL NO. 404-1

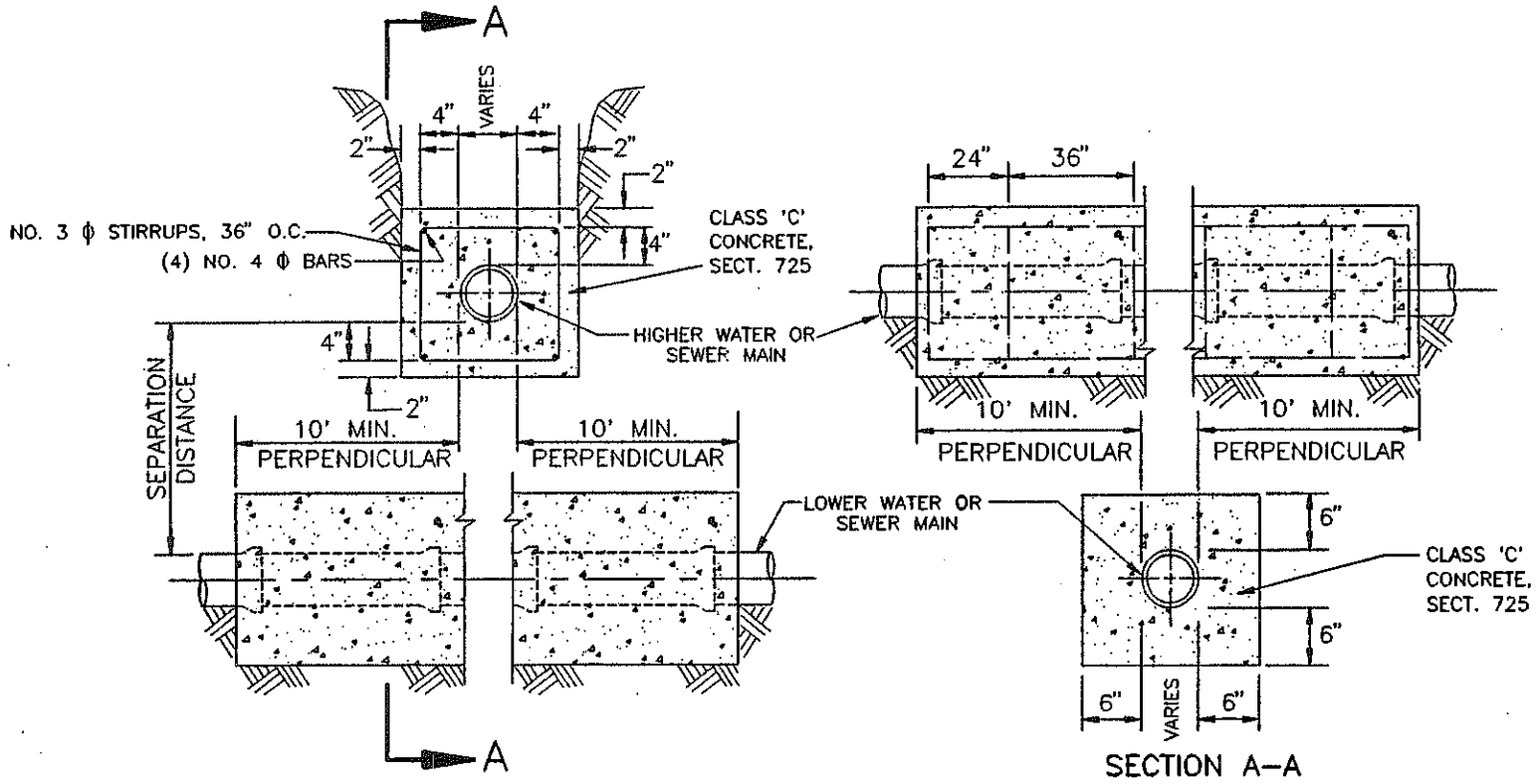

ENCASEMENT FOR PIPE CROSSING

DETAIL NO. 404–2	MARICOPA ASSOCIATION of GOVERNMENTS STANDARD DETAIL	WATER AND SANITARY SEWER SEPARATION/PROTECTION		DETAIL NO. 404–2

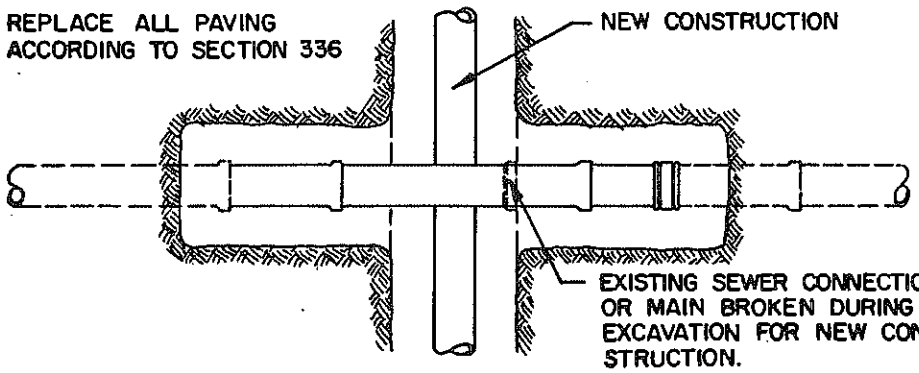

PLAN VIEW OF REPLACEMENT

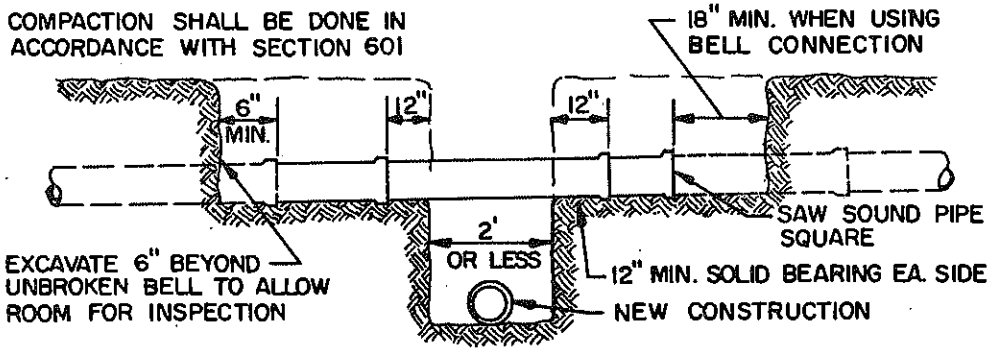

REPLACEMENT WHEN NEW TRENCH 2' WIDE OR LESS

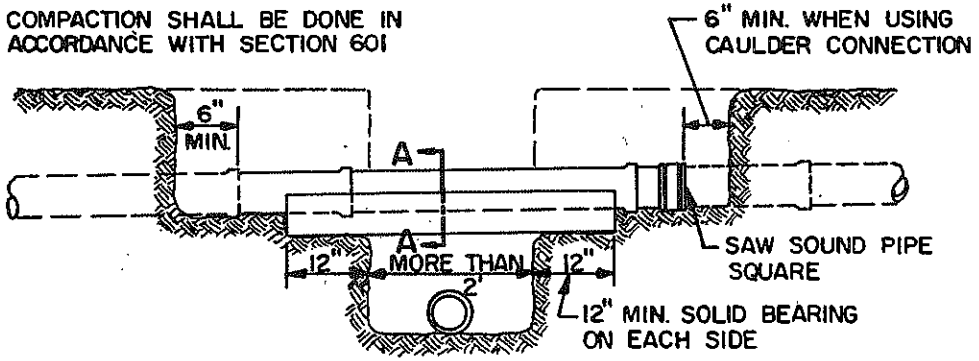

REPLACEMENT WHEN NEW TRENCH MORE THAN 2' WIDE

NOTE

1. BROKEN PIPE SHALL BE REPLACED WITH A MINIMUM OF ONE FULL JOINT AND TWO SHORT LENGTHS WITH UNBROKEN BELLS. CONSTRUCTION & JOINTS TO BE MADE AS PER SECT. 615.

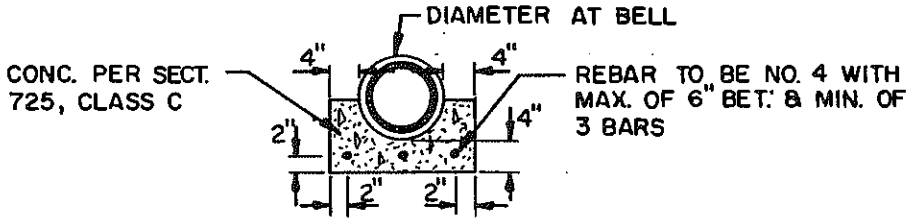

SECTION 'A'-'A'

DETAIL NO. 405	MARICOPA ASSOCIATION of GOVERNMENTS STANDARD DETAIL	BROKEN SEWER LINE REPLACEMENT		DETAIL NO. 405

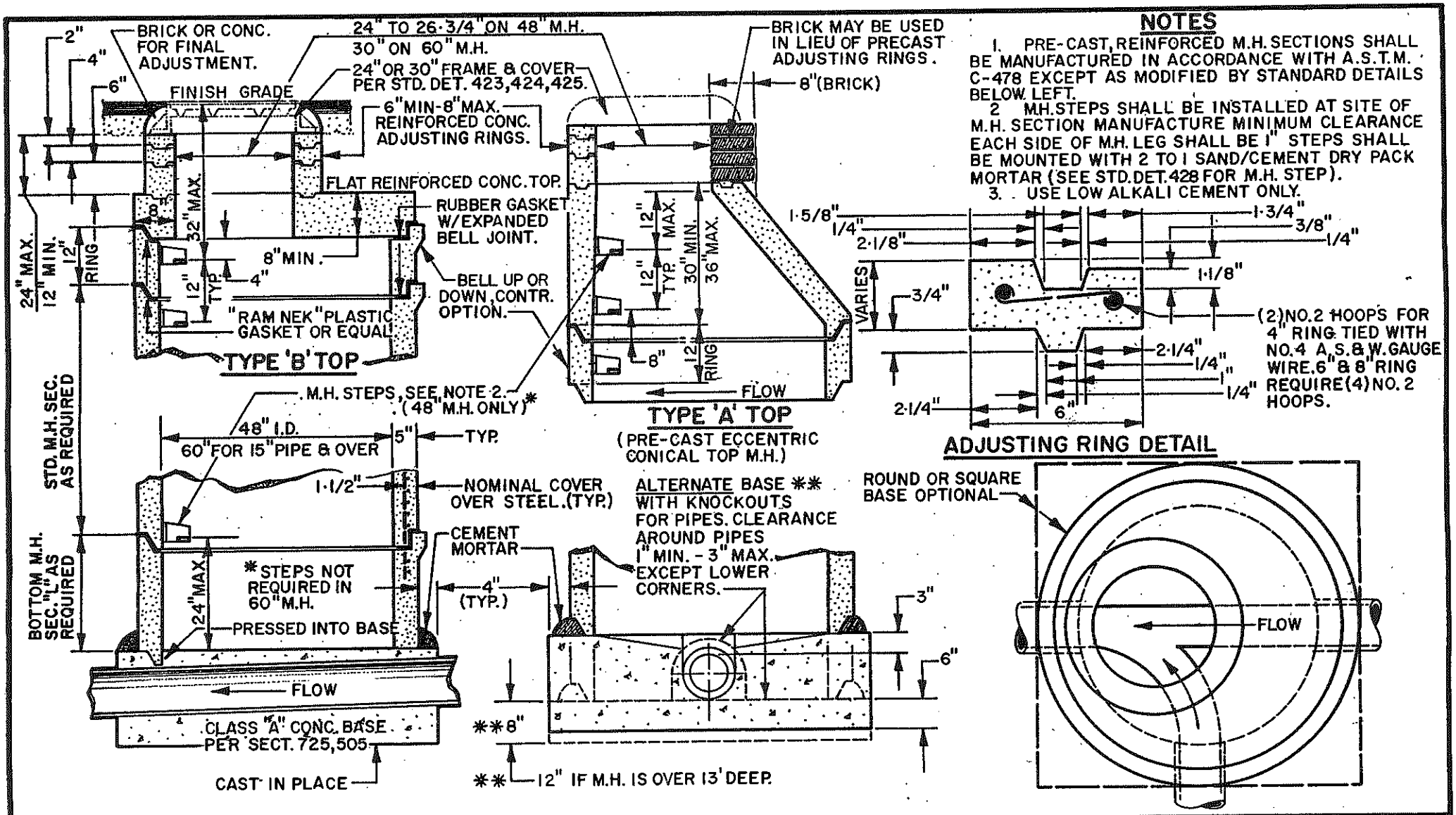

NOTES

1. PRE-CAST, REINFORCED M.H. SECTIONS SHALL BE MANUFACTURED IN ACCORDANCE WITH A.S.T.M. C-478 EXCEPT AS MODIFIED BY STANDARD DETAILS BELOW LEFT.
2. M.H. STEPS SHALL BE INSTALLED AT SITE OF M.H. SECTION MANUFACTURE MINIMUM CLEARANCE EACH SIDE OF M.H. LEG SHALL BE 1" STEPS SHALL BE MOUNTED WITH 2 TO 1 SAND/CEMENT DRY PACK MORTAR (SEE STD. DET. 428 FOR M.H. STEP).
3. USE LOW ALKALI CEMENT ONLY.

DETAIL NO. 420	MARICOPA ASSOCIATION of GOVERNMENTS STANDARD DETAIL	PRE-CAST CONCRETE SEWER MANHOLE	DETAIL NO. 420

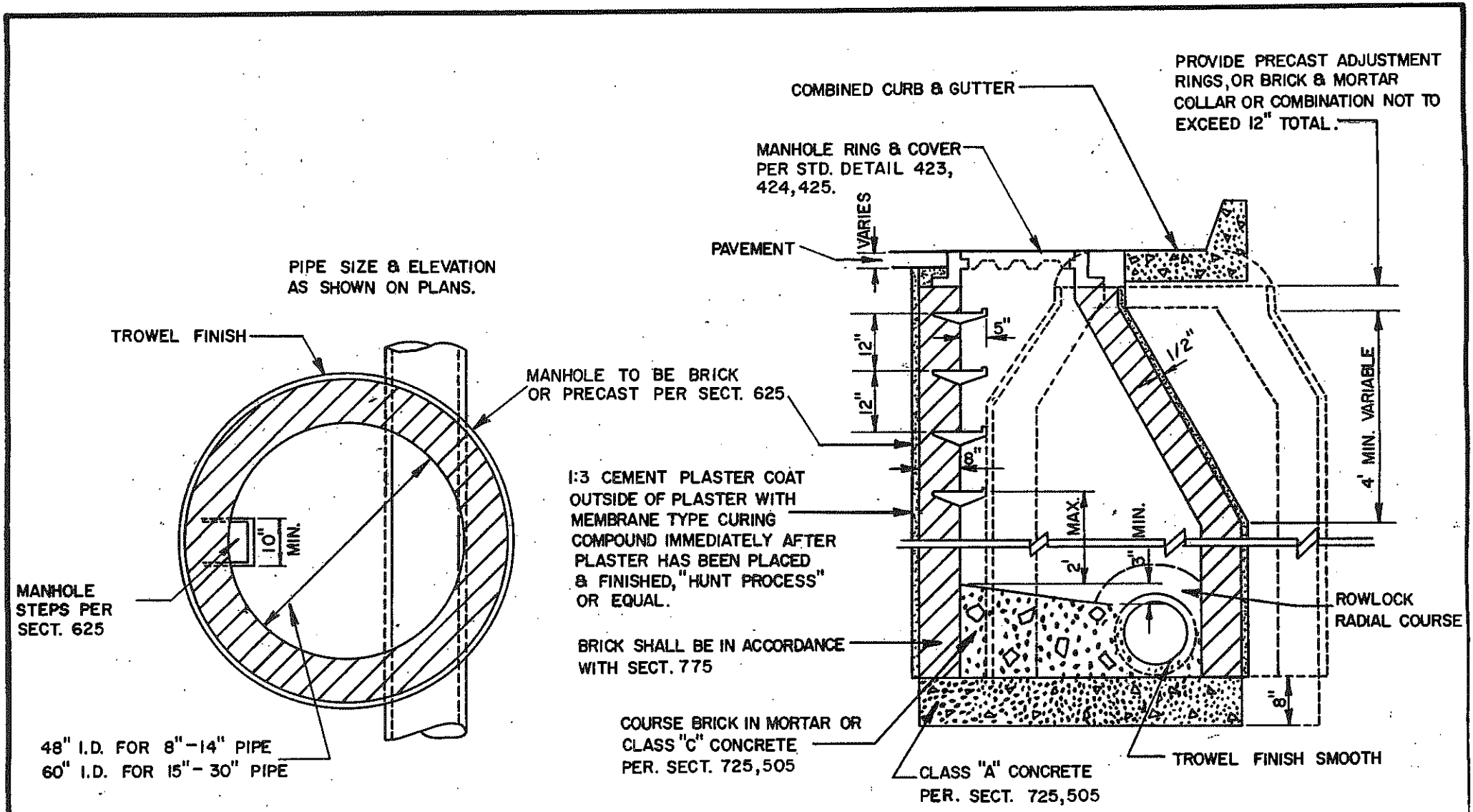

DETAIL NO. 421	MARICOPA ASSOCIATION of GOVERNMENTS STANDARD DETAIL	OFFSET MANHOLE FOR 8"-30" PIPE	DETAIL NO. 421

M.H. FRAME AND COVER PER SECT. 625

FOUR STEEL SPACERS, 4"x2", THICKNESS AS REQUIRED FROM 1/2" TO 2". WHEN THICKNESS IS LESS THAN 1/2" USE MORTAR, WHEN GREATER THAN 2", USE BRICK.

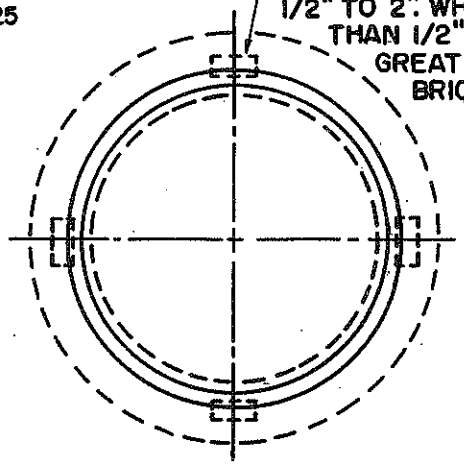

LEAVE CONC. COLLAR LOW AND SEAL WITH 3/8" FINE DENSE GRADED PLANT MIX MATERIAL, MIN THICKNESS 1/2", MAX 1".

CLASS B CONCRETE AS PER SECT. 725,505

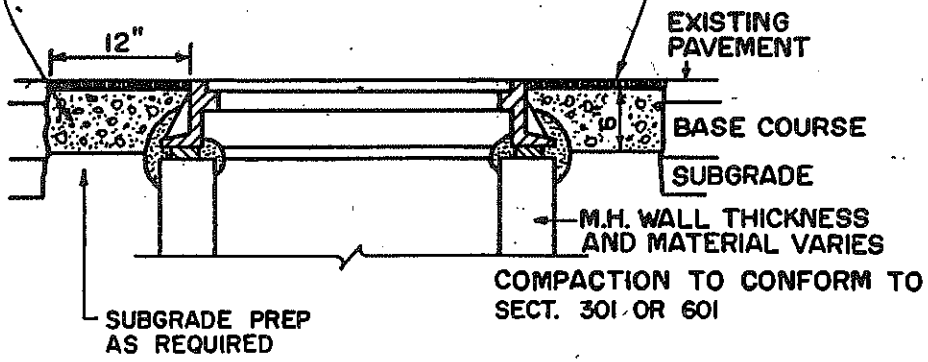

SUBGRADE PREP AS REQUIRED

COMPACTION TO CONFORM TO SECT. 301 OR 601

SEWER MANHOLE

PIPE SIZES AND ELEVATIONS AS SHOWN ON PLANS

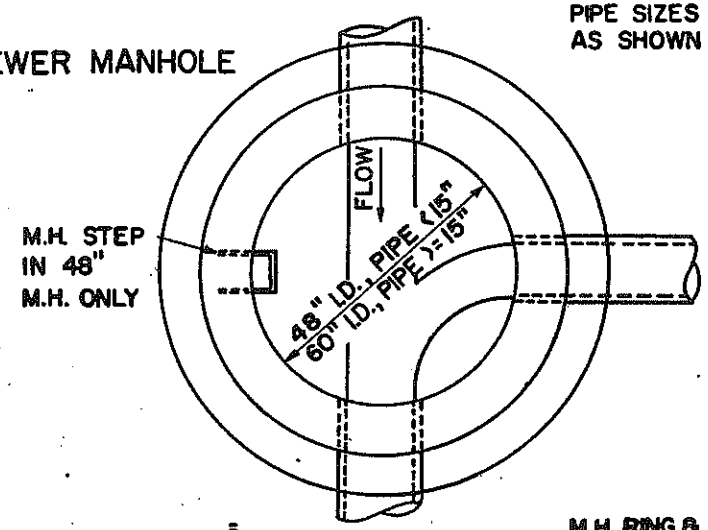

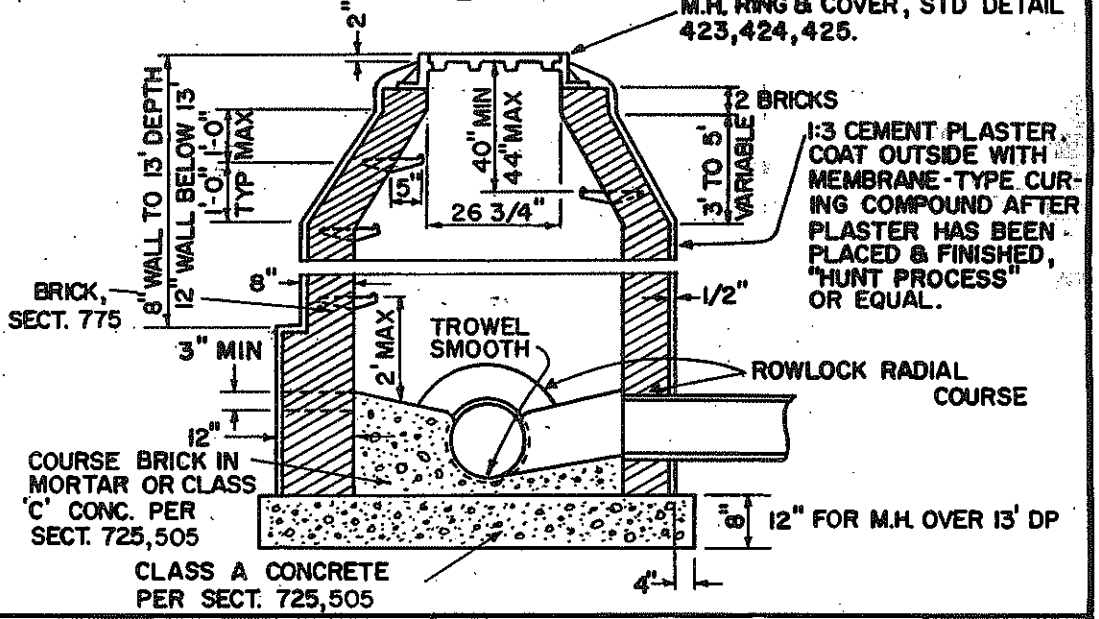

DETAIL NO. 422	MARICOPA ASSOCIATION of GOVERNMENTS STANDARD DETAIL	SEWER MANHOLE AND COVER FRAME ADJ		DETAIL NO. 422

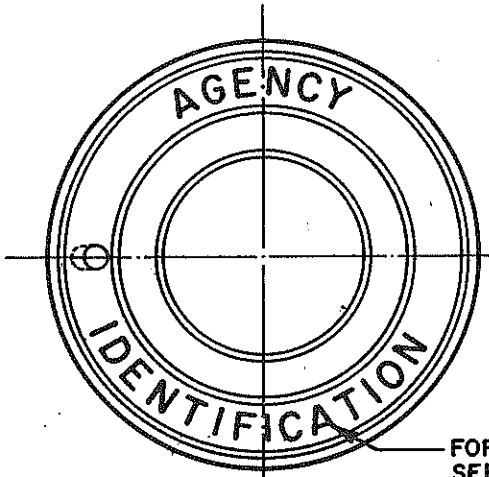

FACE OF COVER
CAST IRON

FOR COVER LETTERING SEE NOTE ON STANDARD DETAIL 424.

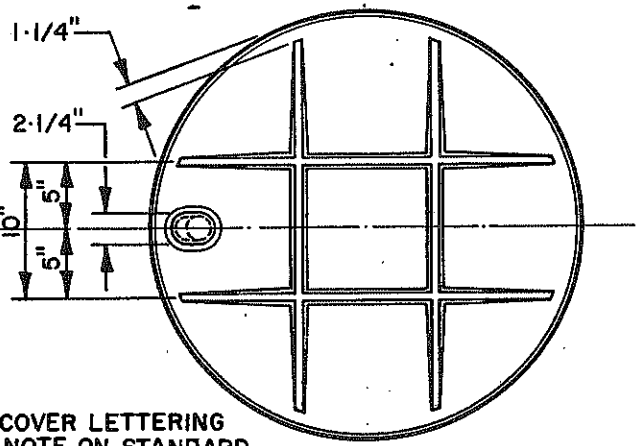

BACK OF COVER

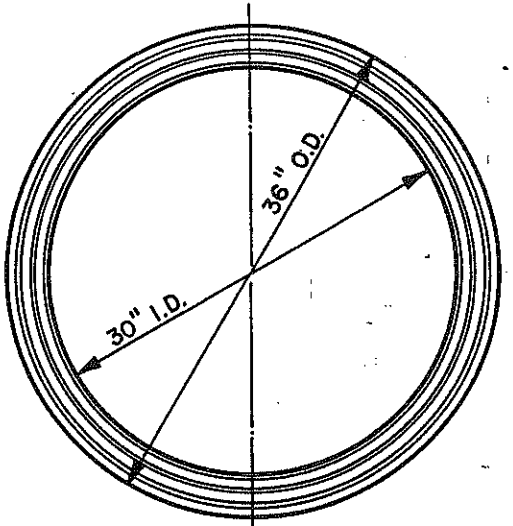

CAST IRON MANHOLE RING

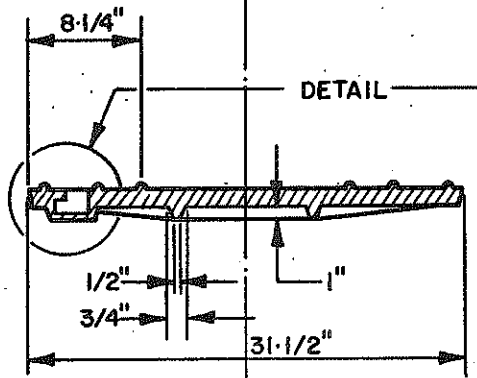

SECTION OF COVER
APPROX. WEIGHT 276 LBS.

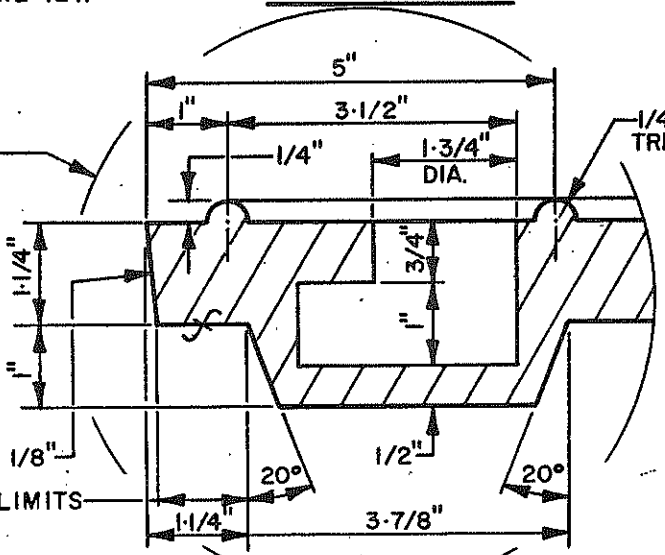

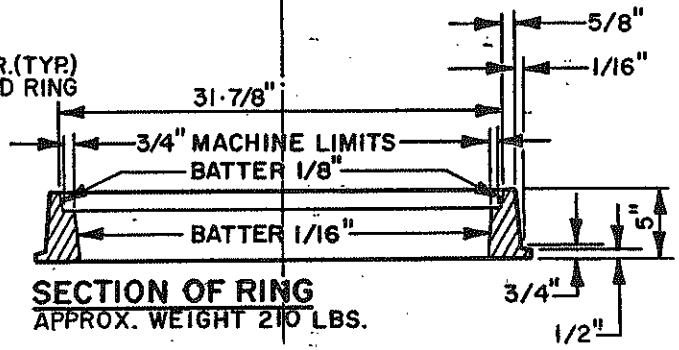

SECTION OF RING
APPROX. WEIGHT 210 LBS.

NOTES

1. WEIGHT OF CASTING SHALL BE NO MORE THAN 2% LESS THAN THE APPROXIMATE WEIGHT SPECIFIED.
2. CASTINGS SHALL CONFORM TO SECT. 787

DETAIL NO. 423	MARICOPA ASSOCIATION of GOVERNMENTS STANDARD DETAIL	WATER TIGHT 30" MANHOLE FRAME & COVER		DETAIL NO. 423

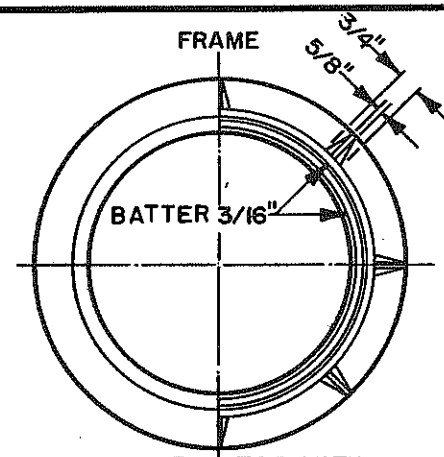

BOTTOM VIEW TOP VIEW

WT. (CL. 30) - 205 LBS.
WT. (CL. 35) - 170 LBS.

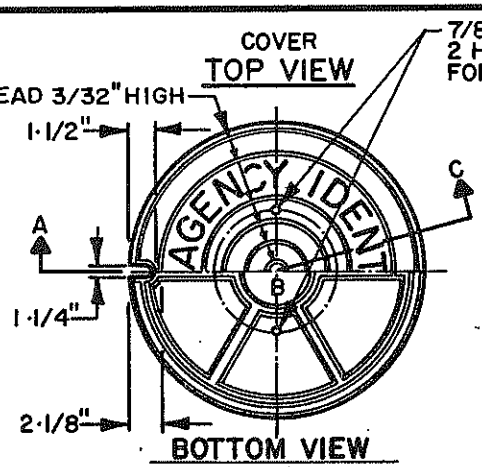

BOTTOM VIEW

WT. (CL. 30) - 200 LBS.
WT. (CL. 35) - 180 LBS.

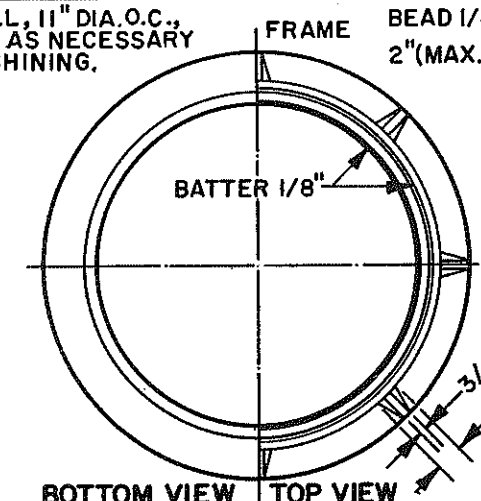

BOTTOM VIEW TOP VIEW

WT. (CL. 30) - 224 LBS.
WT. (CL. 35) - 219 LBS.

BOTTOM VIEW

WT. (CL. 30) - 324 LBS.
WT. (CL. 35) - 207 LBS.

24" MANHOLE FRAME & COVER

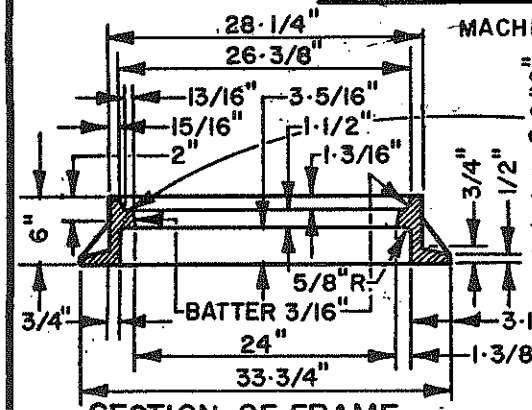

SECTION OF FRAME

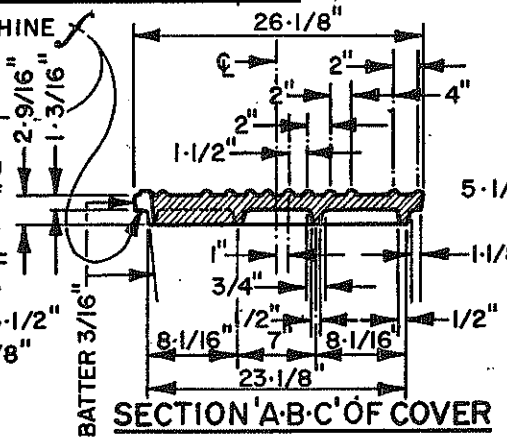

SECTION 'A-B-C' OF COVER

30" MANHOLE FRAME & COVER

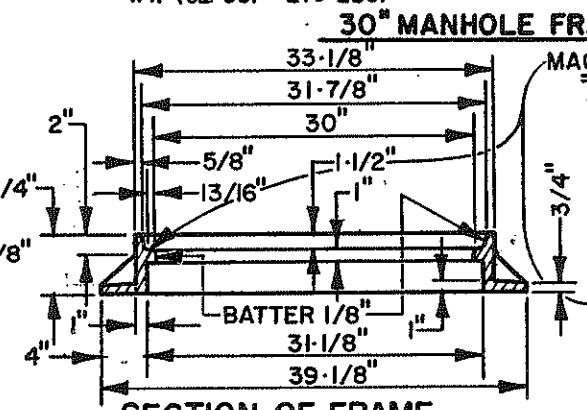

SECTION OF FRAME

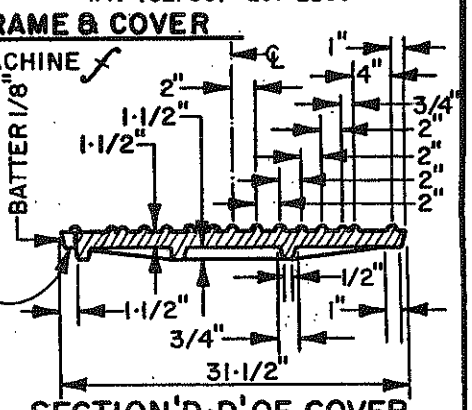

SECTION 'D-D' OF COVER

NOTE LETTERING ON MANHOLE COVER TO CONTAIN NAME OF AGENCY AND UTILITY FOR WHICH MANHOLE IS NEEDED, (I.E. "PHOENIX SANITARY SEWER"), OR AS DIRECTED. THE TOTAL WIDTH OF INDIVIDUAL LETTERS TO BE SUCH THAT LETTERS AND WORDS ARE EQUALLY SPACED AND BALANCED TO FORM A COMPLETE CIRCLE WITH SPACERS BEFORE AND AFTER THE WORD IDENTIFYING THE AGENCY INVOLVED. LETTERS TO BE 2" IN HEIGHT AND RAISED 1/8" ABOVE LEVEL OF COVER. TYPE OF LETTERS TO BE SUBMITTED FOR APPROVAL. WEIGHT OF CASTINGS SHALL BE NO MORE THAN 2% LESS THAN THE APPROXIMATE WEIGHT SPECIFIED. CASTINGS SHALL CONFORM TO SECTION 787.

DETAIL NO. 424	MARICOPA ASSOCIATION of GOVERNMENTS STANDARD DETAIL	24" & 30" MANHOLE FRAME & COVER		DETAIL NO. 424

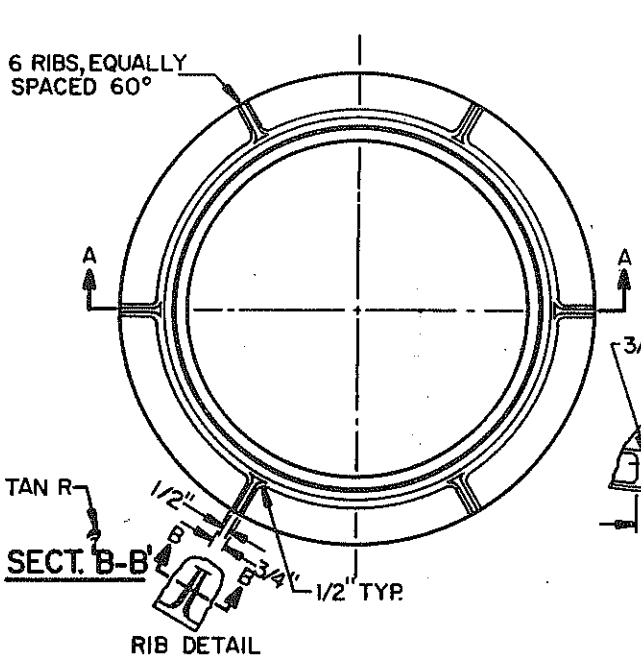

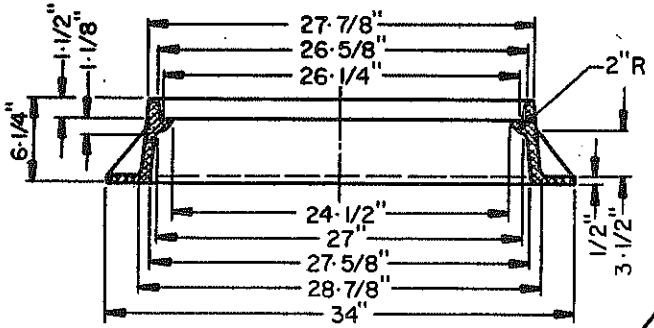

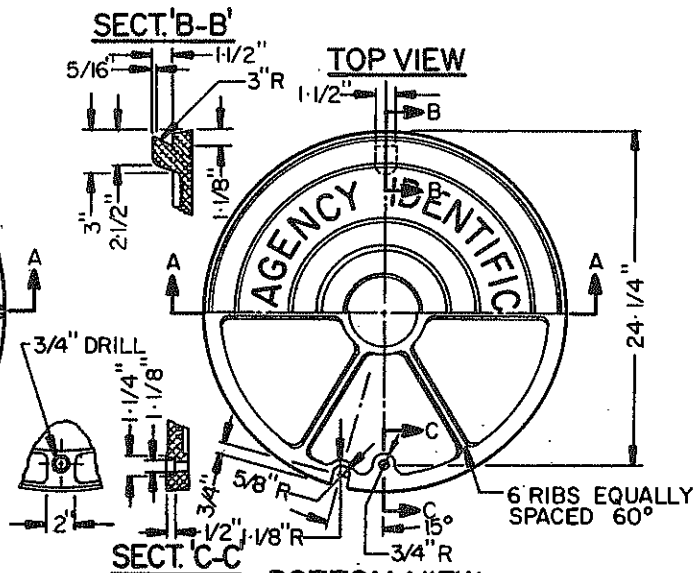

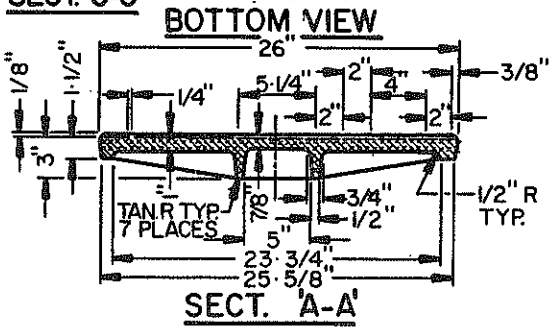

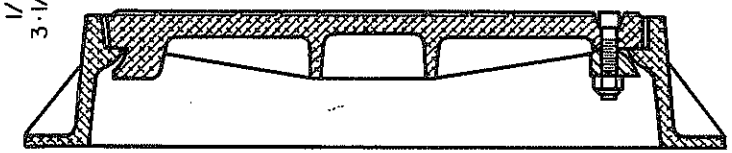

SECTION VIEW OF FRAME & COVER WITH CAM LOCKING DEVICE

MATERIAL SHALL CONFORM TO ASTM STANDARDS
B 179-65 ALLOY SN122A
B 179-65 ALLOY CN42A
B 108-65 ALLOY SC103A
(ALL 3 ACCEPTABLE)

LETTERING ON MANHOLE COVER TO CONTAIN NAME OF AGENCY AND UTILITY FOR WHICH MANHOLE IS NEEDED, (I. E. "PHOENIX SANITARY SEWER"), OR AS DIRECTED. THE TOTAL WIDTH OF INDIVIDUAL LETTERS TO BE SUCH THAT LETTERS AND WORDS ARE EQUALLY SPACED AND BALANCED TO FORM A COMPLETE CIRCLE WITH SPACERS BEFORE AND AFTER THE WORD IDENTIFYING THE AGENCY INVOLVED. LETTERS TO BE 2" IN HEIGHT AND RAISED 1/8" ABOVE LEVEL OF COVER. TYPE OF LETTERS TO BE SUBMITTED FOR APPROVAL. WEIGHT OF CASTINGS SHALL BE NO MORE THAN 2% LESS THAN THE APPROXIMATE WEIGHT SPECIFIED, CASTINGS SHALL CONFORM TO SECTION 787

SHALL CONFORM TO SECT. 625.3.1 -(FRAME & COVER)

DETAIL NO. 425	MARICOPA ASSOCIATION of GOVERNMENTS STANDARD DETAIL	24" ALUMINUM MANHOLE FRAME & COVER		DETAIL NO. 425

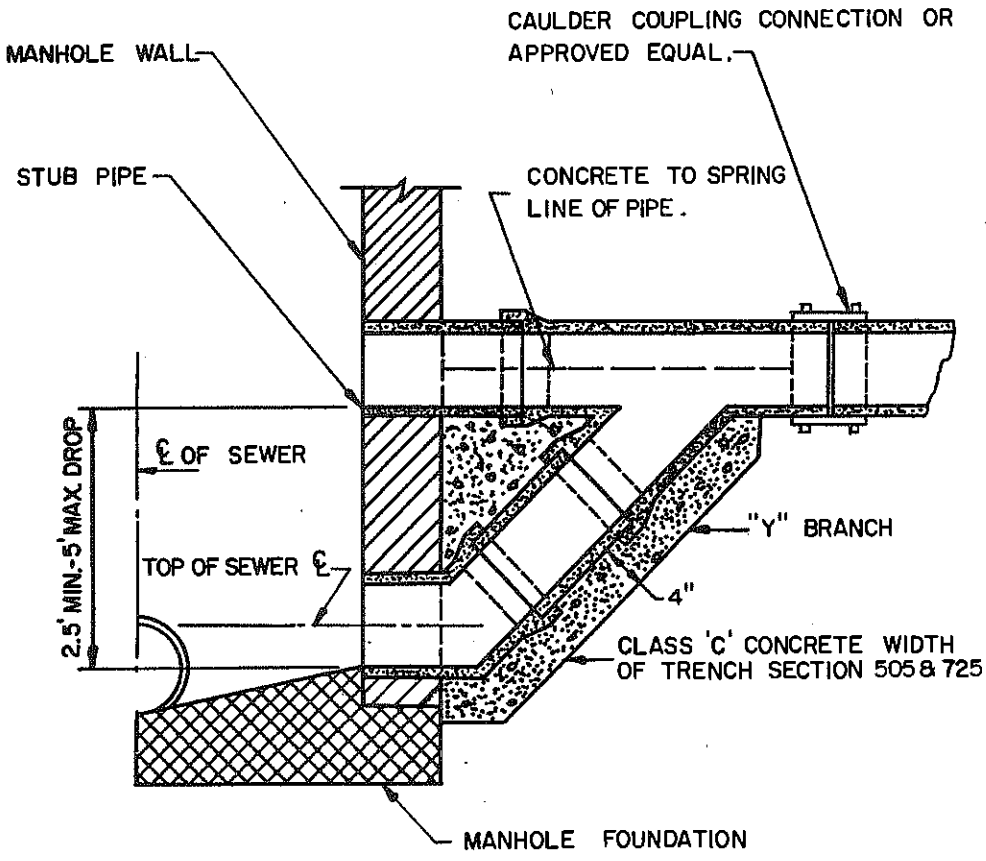

TYPE A

2.5' TO 5' DROP

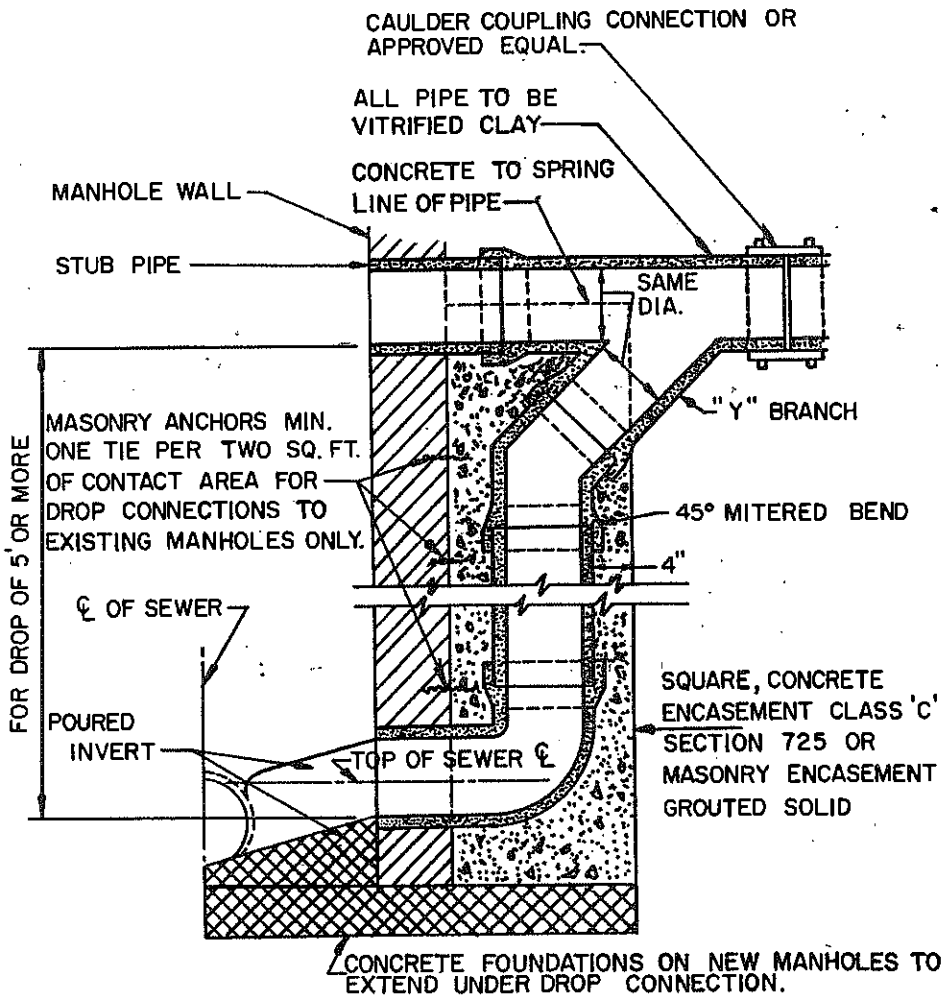

TYPE B

5' OR MORE

DETAIL NO. 426	MARICOPA ASSOCIATION of GOVERNMENTS STANDARD DETAIL	DROP SEWER CONNECTIONS		DETAIL NO. 426

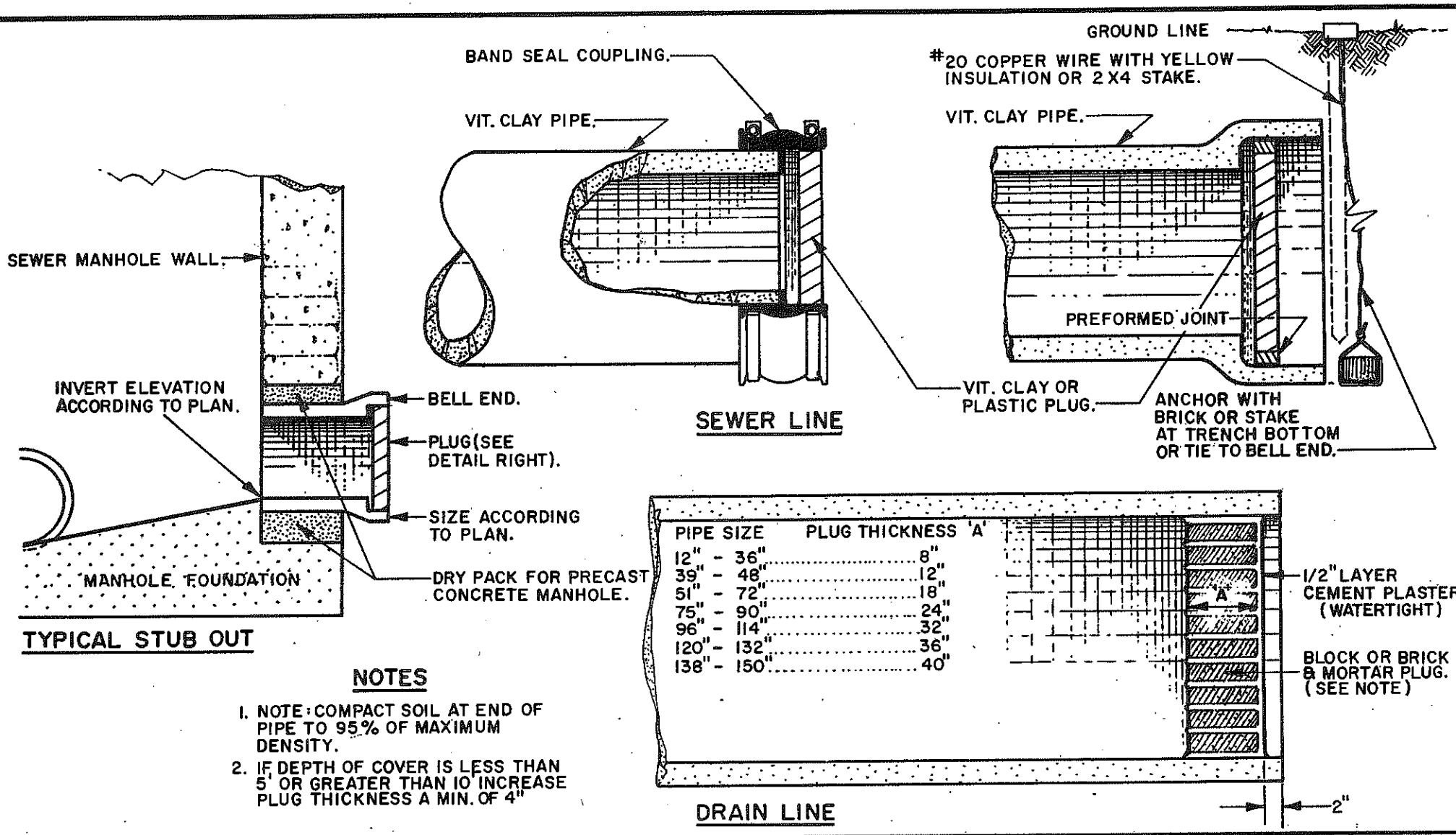

PIPE SIZE	PLUG THICKNESS 'A'
12" - 36"	8"
39" - 48"	12"
51" - 72"	18"
75" - 90"	24"
96" - 114"	32"
120" - 132"	36"
138" - 150"	40"

DRAIN LINE

NOTES

1. NOTE: COMPACT SOIL AT END OF PIPE TO 95% OF MAXIMUM DENSITY.
2. IF DEPTH OF COVER IS LESS THAN 5' OR GREATER THAN 10' INCREASE PLUG THICKNESS A MIN. OF 4"

DETAIL NO. 427	MARICOPA ASSOCIATION of GOVERNMENTS STANDARD DETAIL	STUB OUT AND PLUGS		DETAIL NO. 427

CAST IRON MANHOLE STEP

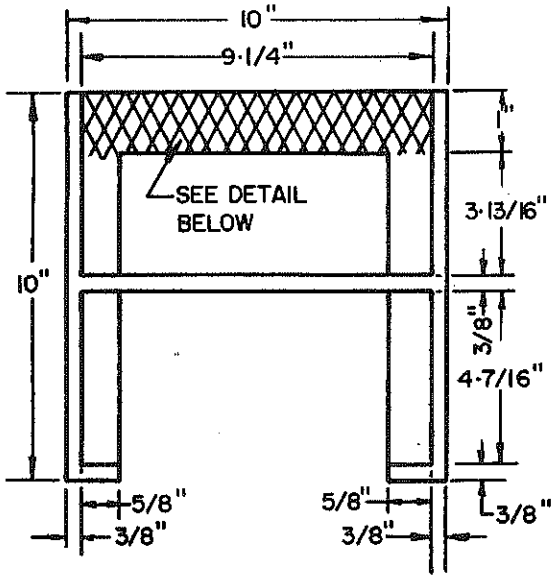

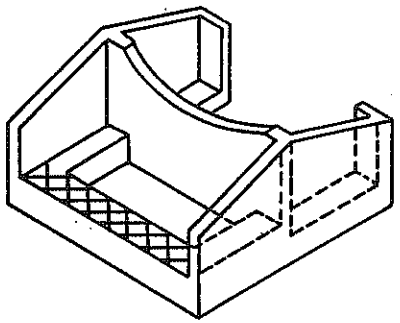

DETAIL

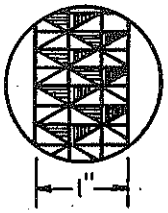

APPROXIMATE WEIGHT 10 LBS.

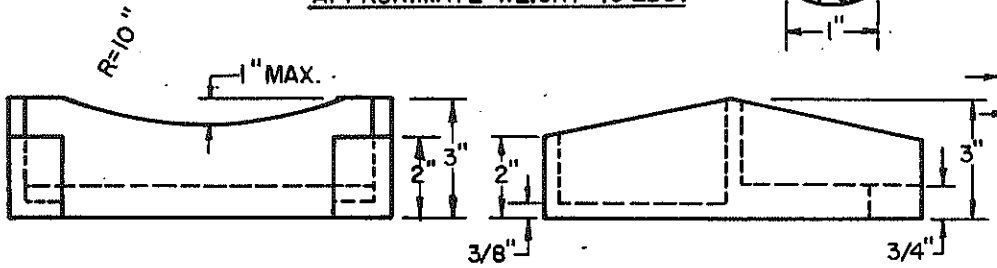

NOTES:

1. ALL DIMENSIONS ARE MINIMUM EXCEPT WHERE NOTED.
2. CASTING AS PER SECT. 787.

POLYPROPYLENE MANHOLE STEP

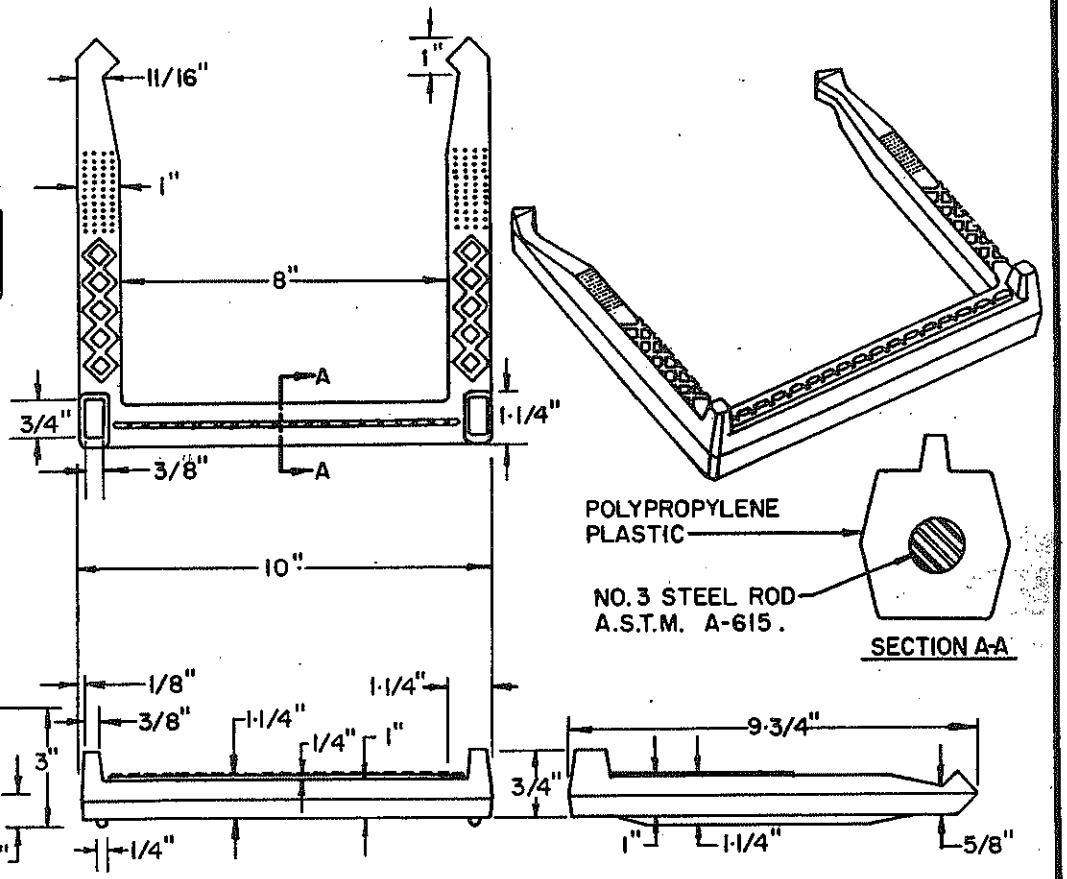

SECTION A-A

NOTES:

1. STEPS SHALL BE PLACED INTO WET CONCRETE WALL DURING MANUFACTURE OR MORTARED INTO HOLES AFTER CONCRETE HAS SET.
2. POLYPROPYLENE MUST MEET REQUIREMENTS OF A.S.T.M. 2146, TYPE II, GRADE 16906.

DETAIL NO. 428	MARICOPA ASSOCIATION of GOVERNMENTS STANDARD DETAIL	MANHOLE STEPS		DETAIL NO. 428

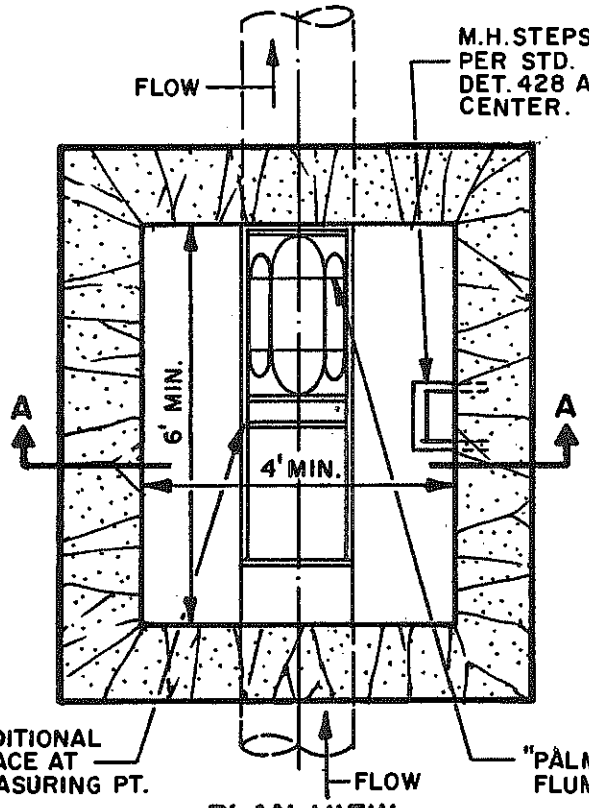

PLAN VIEW

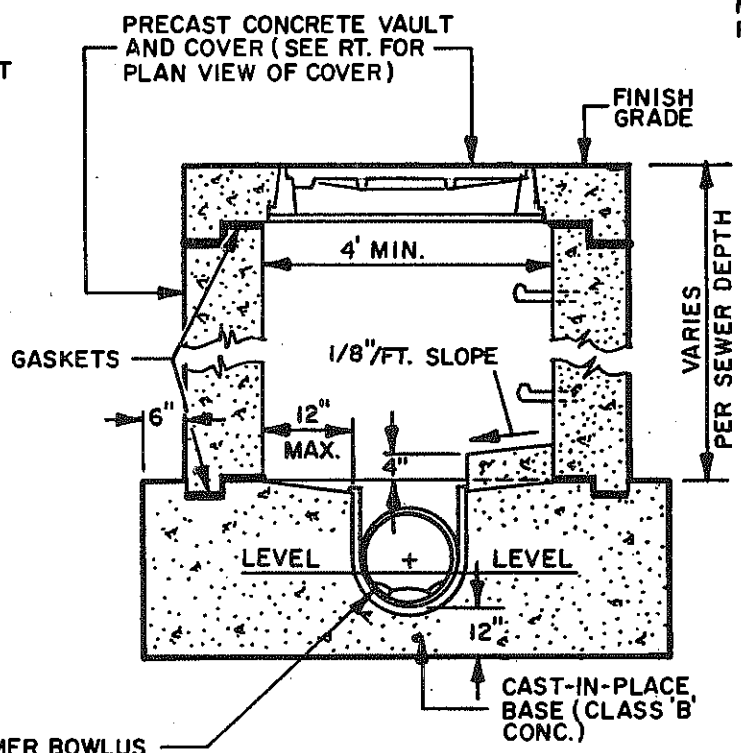

SECTION A-A

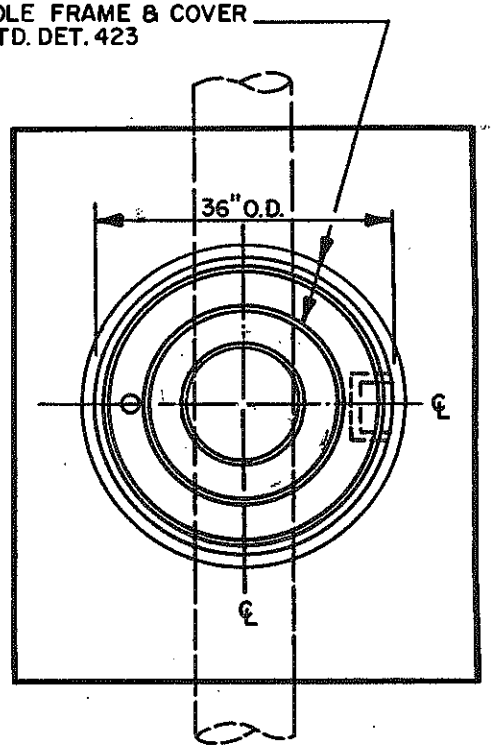

MANHOLE & COVER SLAB

NOTES

1. THIS CONTROL VAULT WITH MANHOLE & COVER SHALL BE USED ON 6" & 8" DIA. SEWER WITH FLOWS IN THE RANGE OF 40 TO 340 G.P.M.
2. VAULT TO BE CONSTRUCTED ON STRAIGHT RUN OF BUILDING SEWER, ACCESSIBLE & SAFELY LOCATED ON THE OWNERS PROPERTY ADJACENT TO A PUBLIC RIGHT-OF-WAY.
3. THE "PALMER BOWLUS FLUME" SHALL BE INSTALLED PER THE MANUFACTURERS RECOMMENDATIONS.
4. THE PRECAST CONCRETE VAULT SHALL BE RECTANGULAR WITH MINIMUM INSIDE DIMENSIONS OF 4' WIDE & 6'LONG & AT A DEPTH OF THE DESIGN OF THE BUILDING SEWER.
5. A SHOP DRAWING SHALL BE SUBMITTED TO THE CONTRACTING AGENCY FOR APPROVAL BEFORE INSTALLATION OF THE VAULT & THE "PALMER BOWLUS FLUME" WILL BE ALLOWED.

DETAIL NO. 429	MARICOPA ASSOCIATION of GOVERNMENTS STANDARD DETAIL	INDUSTRIAL WASTE CONTROL VAULT WITH MANHOLE	DETAIL NO. 429

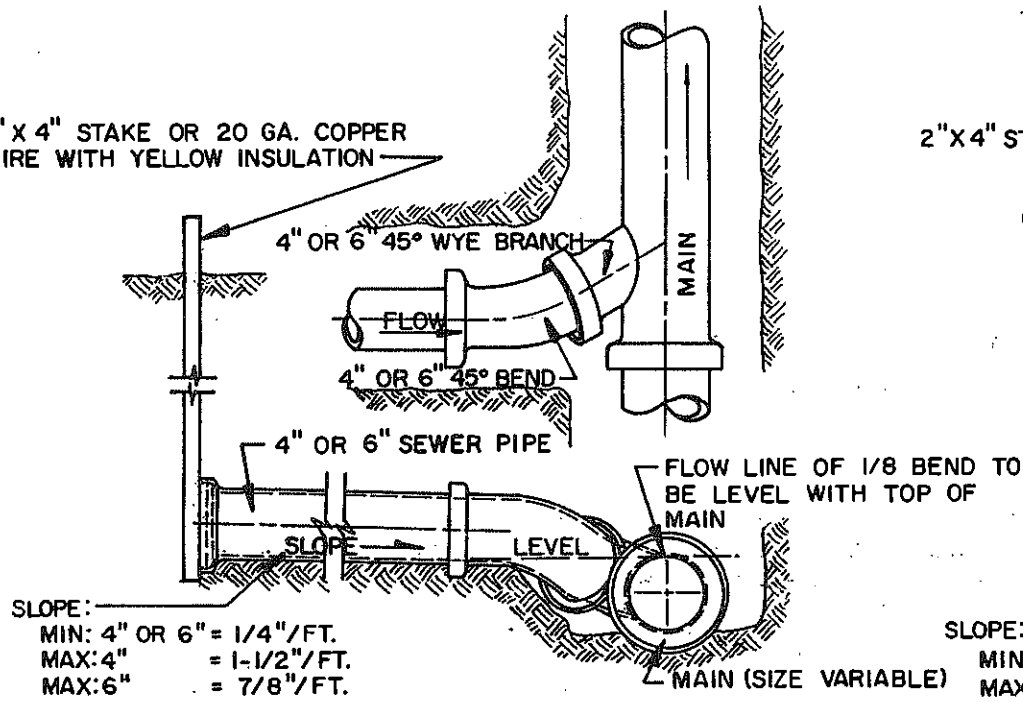

TYPE "A"

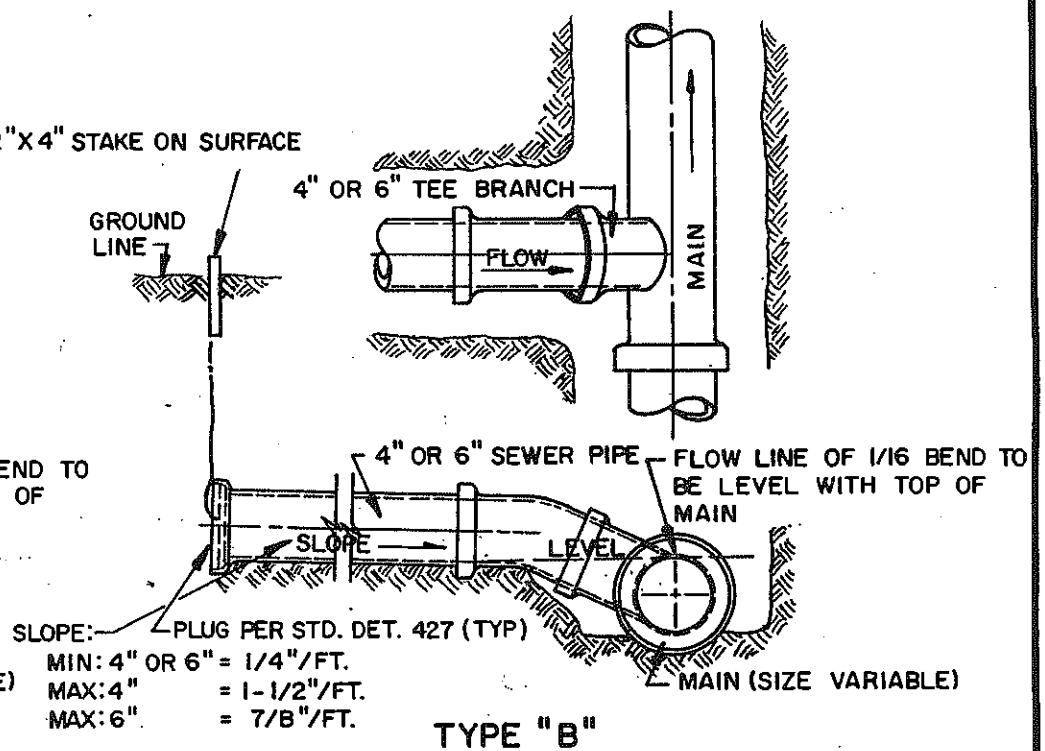

TYPE "B"

NOTES

1. CONSTRUCTION DETAIL APPLIES WHERE CONTRACTOR BUILDS HOUSE CONNECTION. TAP EXTENDS TO PROPERTY LINE IN ALLEYS OR STREETS OR TO ESMT. LINE.
2. SIZE OF TAP SHALL BE DESIGNATED ON PLANS.
3. DETAILS SHOWN MUST BE MET FOR MINIMUM CONDITION OF LESS THAN 5'-0".
4. CONSTRUCT TAP AT MIN. SLOPE IF COVER WILL BE LESS THAN 5 FEET AT PROPERTY LINE.
5. IF DEPTH REQUIRES, MIN. SLOPE CAN BE REDUCED TO 1/8" PER FOOT PROVIDED STUB IS STAKED TO GRADE.
6. FOR DEEPER LATERAL OR TRUNK SEWER CONDITION, THE WYE AND 1/8 BEND OR THE TEE AND 1/16 BEND WILL BE ROTATED TOWARD THE VERTICAL POSITION AS REQUIRED TO OBTAIN 5'-0" COVER OVER TAP AT PROPERTY LINE OR EASEMENT LINE.
7. END OF TAP TO BE SEALED AND MARKED AS NOTED.

DETAIL NO. 440	MARICOPA ASSOCIATION of GOVERNMENTS STANDARD DETAIL	SEWER BUILDING CONNECTION		DETAIL NO. 440

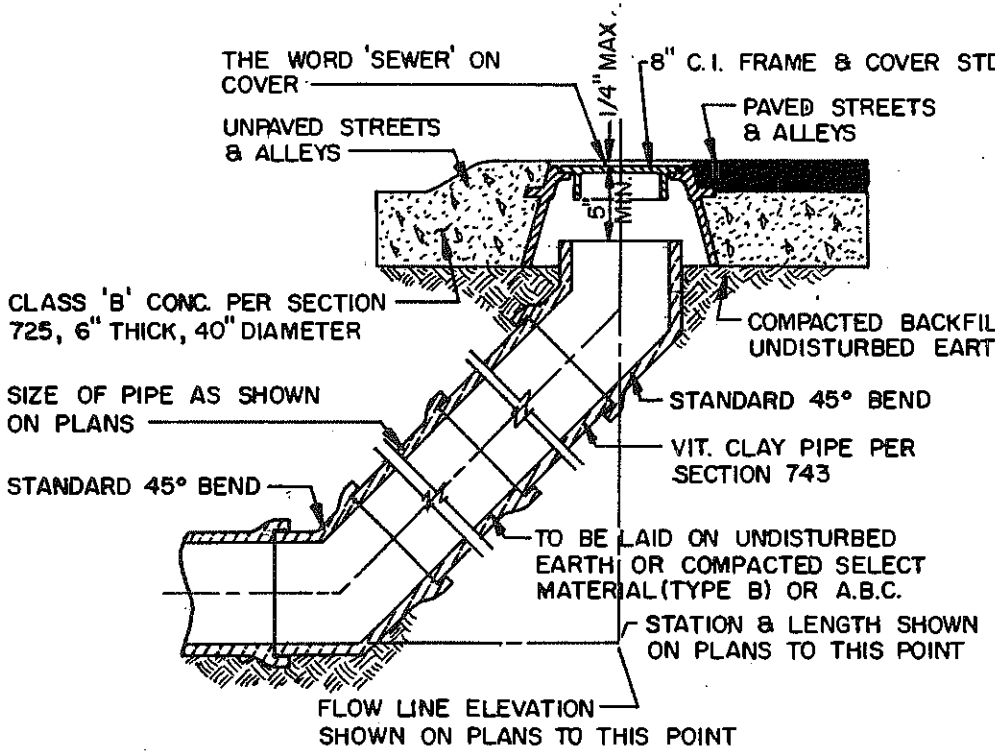

CLEANOUT INSTALLATION

NOTE

END OF SEWER TAP TO BE SEALED AND MARKED IN ACCORDANCE WITH STD. DET. 440

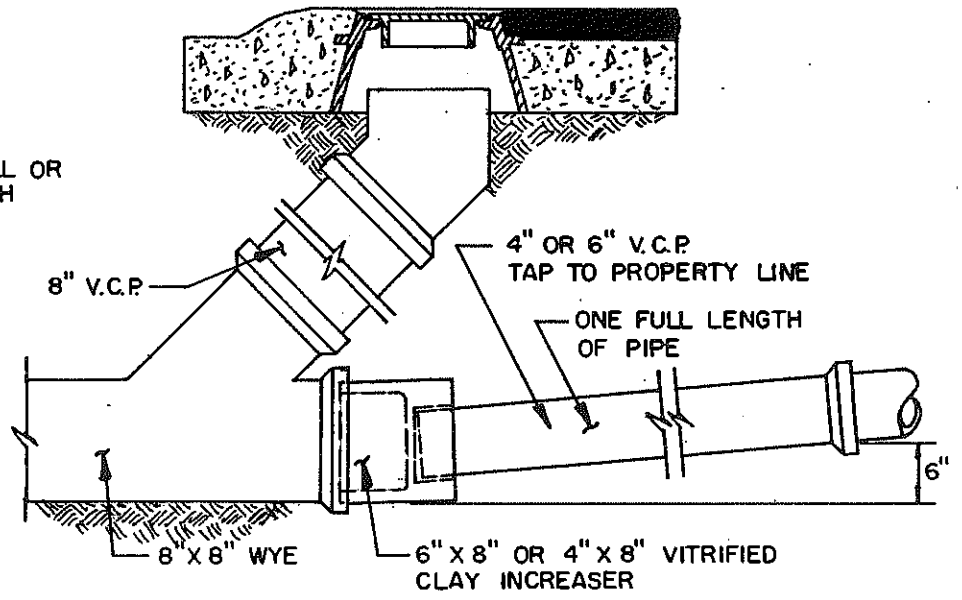

SEWER TAP AT CLEANOUT

DETAIL NO. 441	MARICOPA ASSOCIATION of GOVERNMENTS STANDARD DETAIL	SEWER CLEANOUT		DETAIL NO. 441

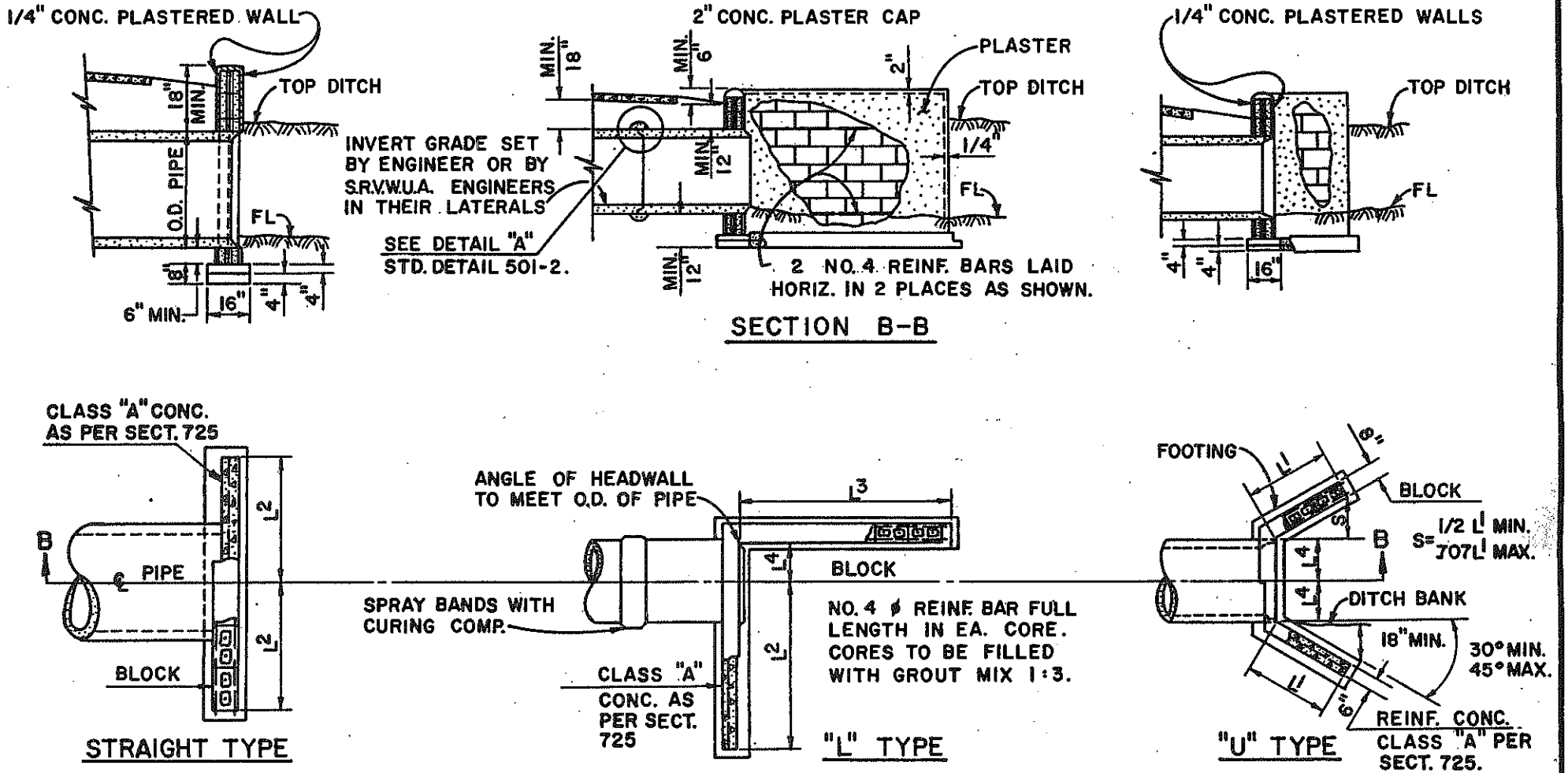

SHEET 1 OF 2

DETAIL NO. 501-1	MARICOPA ASSOCIATION of GOVERNMENTS STANDARD DETAIL	L	HEADWALL		DETAIL NO. 501-1

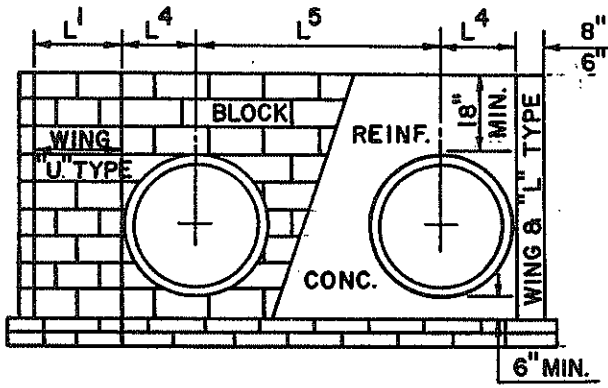

DOUBLE PIPE HEADWALL

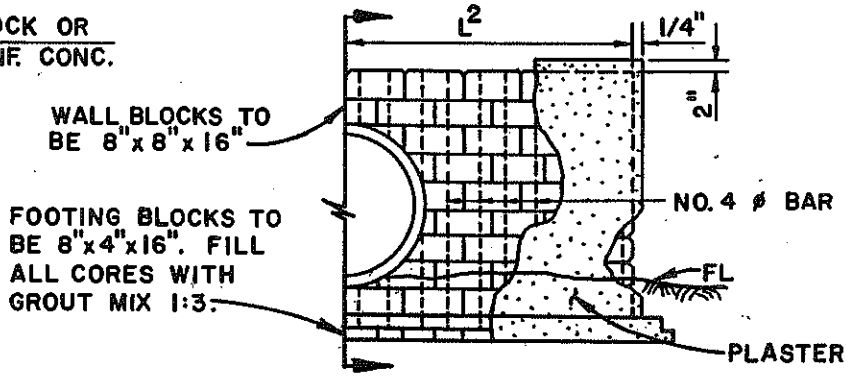

ELEVATION

CONC. BLOCK HDWLS. JOINED WITH CEM'T. MORTAR & CONC. PLASTERED BOTH SIDES OF WALL FULL HGT. & SHALL BE CURED PER SECT. 726.

HEADWALL DIMENSIONS					
PIPE DIA.	L^1	L^2	L^3	L^4	L^5
12"	1'-4"	2'-0"	3'-8"	0'-10"	2'-10"
15"	2'-0"	2'-8"	4'-0"	1'-0"	3'-0"
18"	2'-0"	3'-8"	4'-8"	1'-2"	3'-4"
21"	2'-8"	4'-0"	5'-4"	1'-3"	3'-8"
24"	2'-8"	4'-0"	5'-4"	1'-6"	3'-11"
30"	2'-8"	5'-4"	6'-8"	1'-10"	4'-7"
36"	3'-4"	6'-8"	8'-0"	1'-10"	5'-2"
42"	4'-0"	8'-0"	9'-4"	2'-2"	5' 9"

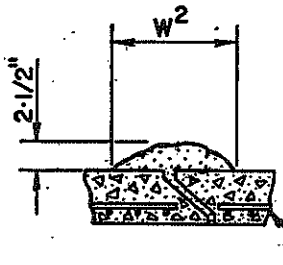

PIPE SIZE	BAND W
12"-21" INCL.	11"
24"-42" INCL.	13"

DETAIL "A"

NOTES:
1. ALL CONCRETE SHALL BE CLASS "A" PER SECT. 505 & 725.
2. CONCRETE BLOCK PER SECT. 510, 775 & 776.
3. CONCRETE REINF. SHALL BE NO. 4 BAR, 12" O.C. BOTH WAYS.

DETAIL NO. 501-2	MARICOPA ASSOCIATION of GOVERNMENTS STANDARD DETAIL	HEADWALL		DETAIL NO. 501-2

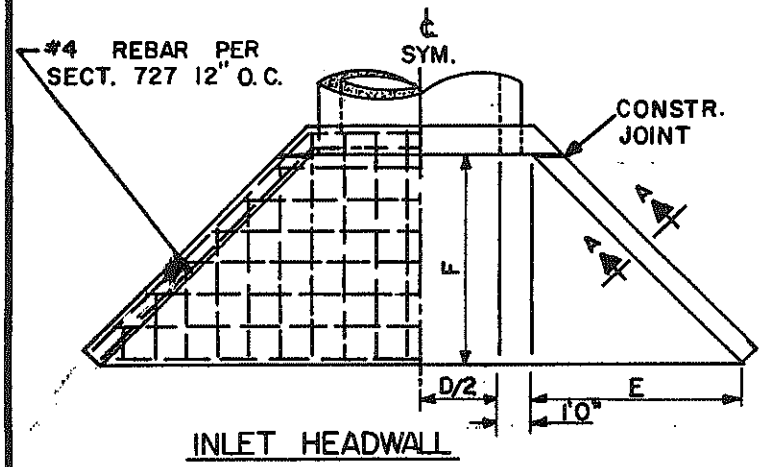

INLET HEADWALL

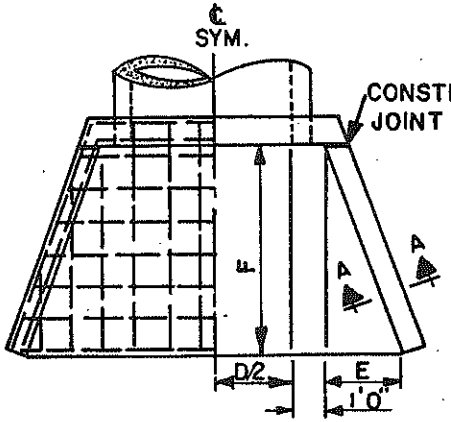

OUTLET HEADWALL

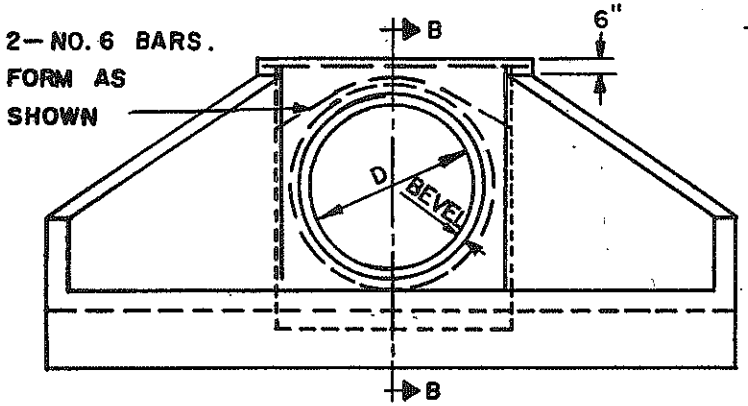

INLET HEADWALL FACE ELEV.- OUTLET SIMILAR

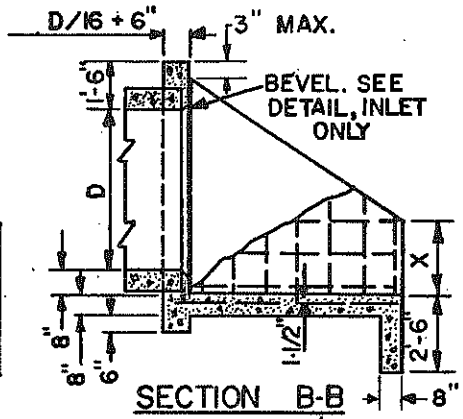

SECTION B-B

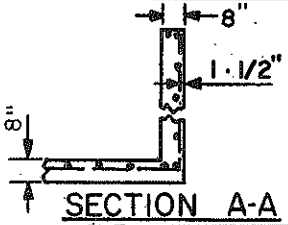

SECTION A-A

CONCRETE SHALL BE CLASS A, PER SECT. 725

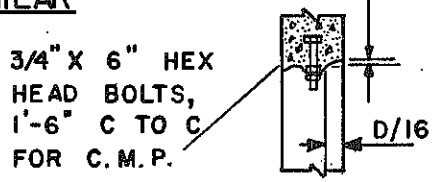

BEVEL DETAIL

D	TYPE	DIMENSIONS F	E	X	CONC. (C.Y.) C.M.P.	R.C.P.	REINF. STEEL (LBS.)
		1 1/2 : 1 EMBANKMENT SLOPE					
42"	1(INLET)	5'-2"	5'-2"	1'-9"	4.55	4.45	275
	2(OUTLET)	5'-2"	1'-11"	1'-9"	3.53	3.45	213
48"	3(INLET)	5'-8"	5'-8"	1'-11"	5.32	5.20	321
	4(OUTLET)	5'-8"	2'-1"	1'-11"	4.12	4.03	249
54"	5(INLET)	6'-2"	6'-2"	2'-1"	6.14	6.01	370
	6(OUTLET)	6'-2"	2'-3"	2'-1"	4.75	4.65	287
60"	7(INLET)	6'-8"	6'-8"	2'-3"	7.03	6.88	424
	8(OUTLET)	6'-8"	2'-5"	2'-3"	5.43	5.31	328
66"	9(INLET)	7'-2"	7'-2"	2'-5"	7.98	7.81	481
	10(OUTLET)	7'-2"	2'-7"	2'-5"	6.16	6.02	372
72"	11(INLET)	7'-8"	7'-8"	2'-7"	8.99	8.80	542
	12(OUTLET)	7'-8"	2'-9"	2'-7"	6.94	6.78	419
78"	13(INLET)	8'-2"	8'-2"	2'-9"	10.07	9.85	608
	14(OUTLET)	8'-2"	3'-0"	2'-9"	7.78	7.61	461
84"	15(INLET)	8'-8"	8'-8"	2'-11"	11.20	10.96	676
	16(OUTLET)	8'-8"	3'-2"	2'-11"	8.66	8.47	522
		4 : 1 EMBANKMENT SLOPE					
42"	17(INLET)	8'-8"	8'-8"	3'-0"	7.88	7.70	475
	18(OUTLET)	8'-8"	3'-2"	3'-0"	5.59	5.46	337
48"	19(INLET)	8'-8"	8'-8"	3'-6"	8.47	8.28	511
	20(OUTLET)	8'-8"	3'-2"	3'-6"	6.10	5.97	368
54"	21(INLET)	8'-8"	8'-8"	4'-0"	9.07	8.87	548
	22(OUTLET)	8'-8"	3'-2"	4'-0"	6.63	6.48	400
60"	23(INLET)	9'-4"	9'-4"	4'-4"	10.39	10.16	627
	24(OUTLET)	9'-4"	3'-5"	4'-4"	7.60	7.43	458
66"	25(INLET)	9'-8"	9'-8"	4'-9"	11.42	11.17	689
	26(OUTLET)	9'-8"	3'-6"	4'-9"	8.39	8.20	506
72"	27(INLET)	9'-8"	9'-8"	5'-3"	12.11	11.84	731
	28(OUTLET)	9'-8"	3'-6"	5'-3"	8.99	8.80	542
78"	29(INLET)	10'-0"	10'-0"	5'-8"	13.22	12.93	798
	30(OUTLET)	10'-0"	3'-8"	5'-8"	9.88	9.66	596
84"	31(INLET)	10'-8"	10'-8"	6'-0"	14.81	14.48	893
	32(OUTLET)	10'-8"	3'-11"	6'-0"	11.00	10.76	664

DETAIL NO.			DETAIL NO.
501-3	MARICOPA ASSOCIATION of GOVERNMENTS STANDARD DETAIL	HEADWALL 42" TO 84" PIPE	501-3

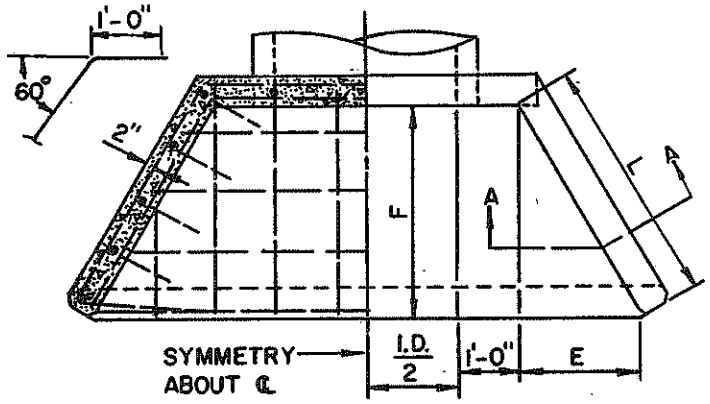

PLAN

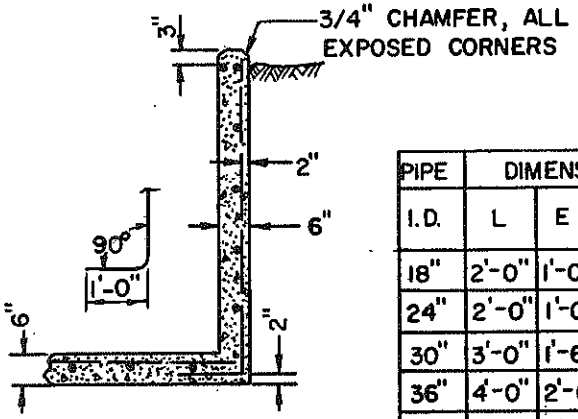

SECTION A-A

PIPE I.D.	DIMENSIONS L	E	F (APPRX)	QUANTITIES C.Y. CONC. C.M.P.	R.C.P.	REINF. STL. LBS.
18"	2'-0"	1'-0"	1'-9"	0.97	0.96	65
24"	2'-0"	1'-0"	1'-9"	1.11	1.07	78
30"	3'-0"	1'-6"	2'-7"	1.50	1.44	108
36"	4'-0"	2'-0"	3'-6"	2.08	2.01	150
42"	5'-0"	2'-6"	4'-4"	2.71	2.63	205
48"	6'-0"	3'-0"	5'-2"	3.39	3.30	270
54"	7'-0"	3'-6"	6'-1"	4.14	4.02	335
60"	8'-0"	4'-0"	6'-11"	4.96	4.80	410

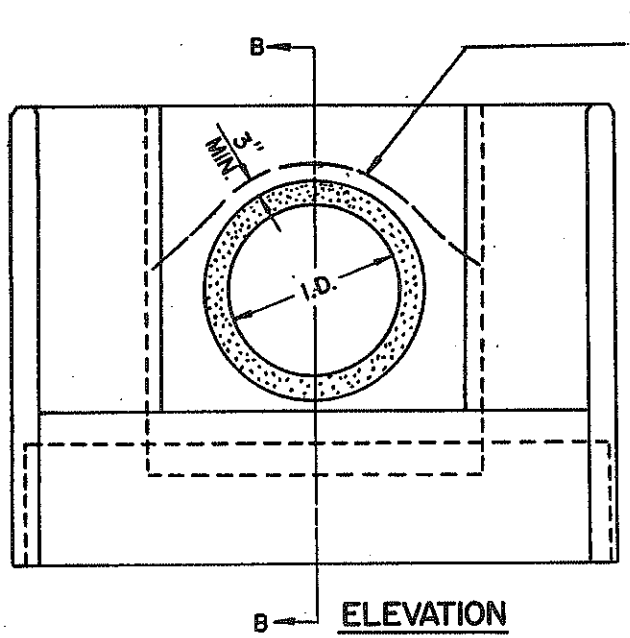

ELEVATION

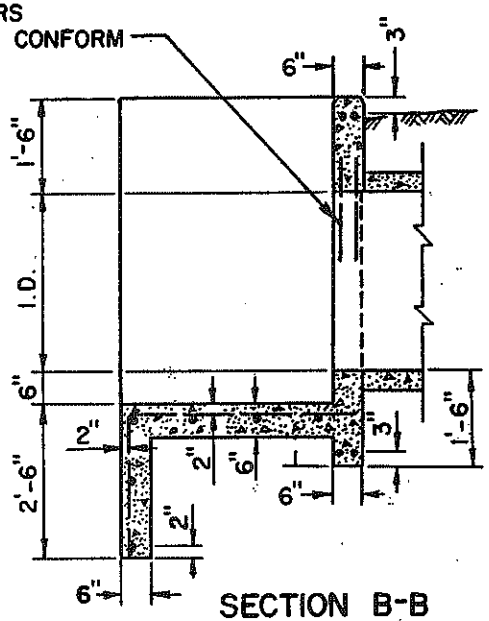

SECTION B-B

NOTES

1. ALL CONCRETE SHALL BE CLASS A, PER SECT. 725
2. ALL REINFORCING BARS SHALL BE #4 EXCEPT #6 BARS OVER PIPE. BAR SPACING APPROXIMATELY 1'-0" C TO C UNLESS OTHERWISE NOTED.
3. 30° WING WALL FLARE SHOWN; 45° NORMALLY DESIRABLE.

DETAIL NO.			DETAIL NO.
501-4	MARICOPA ASSOCIATION of GOVERNMENTS STANDARD DETAIL	HEADWALL IRRIGATION 18" TO 60" PIPE	501-4

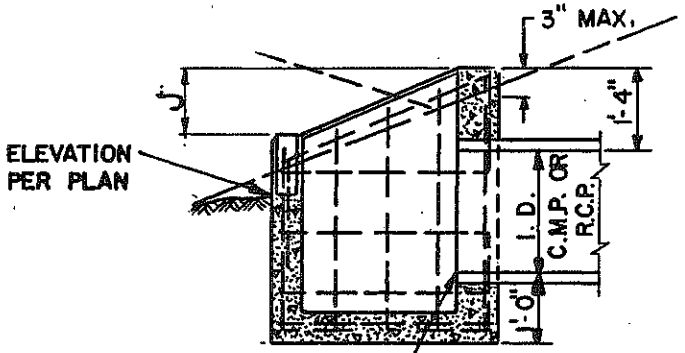

SECTION Z-Z

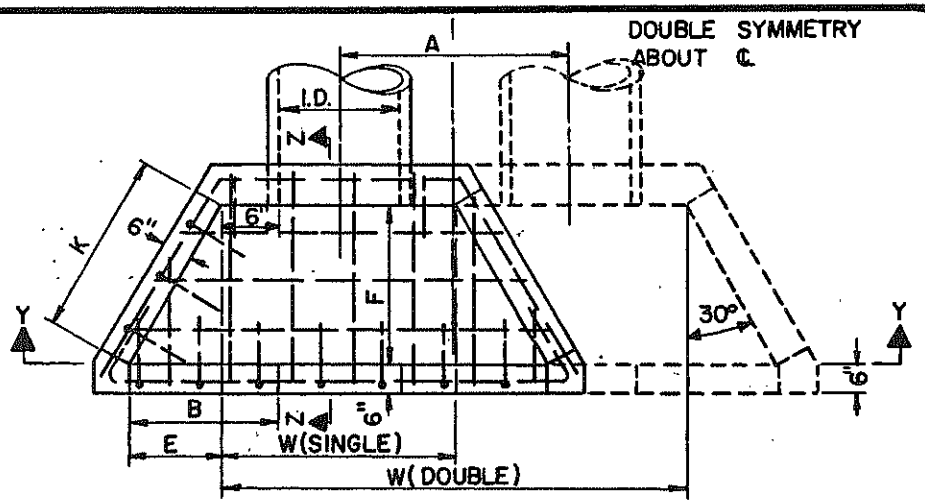

PLAN

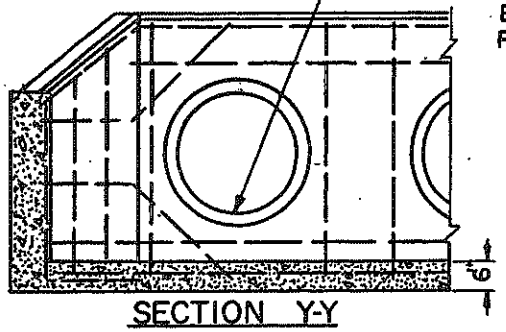

SECTION Y-Y

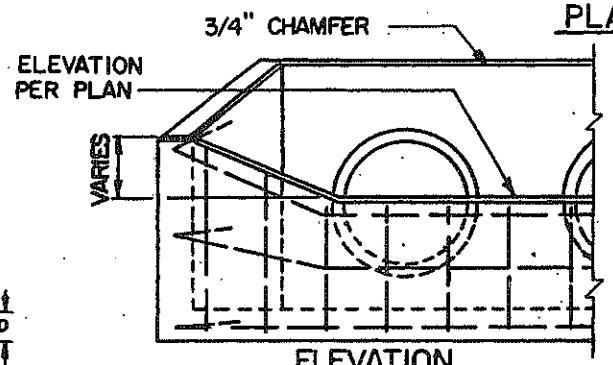

ELEVATION

NOTES:

1. HIGH POINT OF HEADWALL SHALL NOT PROJECT MORE THAN 3" ABOVE SLOPE.
2. ALL CONCRETE SHALL BE CLASS A. PER SECT. 725.
3. ALL REINFORCING BARS SHALL BE NO. 4, 1'-0" C TO C AND 3" CLEAR TO INSIDE OF WALLS AND FLOOR.

PIPE I.D.	W SINGLE	W DOUBLE	A	B	E	F	J	K
	DIMENSIONS							
18"	2'-6"	5'-2"	2'-8"	1'-3"	9"	1'-3 5/8"	9"	1'-6"
24"	3'-0"	6'-6"	3'-6"	1'-7 1/2"	1'-1 1/2"	1'-11 3/8"	11"	2'-3"
30"	3'-6"	7'-10"	4'-4"	2'-0"	1'-6"	2'-7 1/4"	1'-1"	3'-0"
36"	4'-0"	9'-2"	5'-2"	2'-4 1/2"	1'-10 1/2"	3'-3"	1'-4"	3'-9"
42"	4'-6"	10'-6"	6'-0"	2'-9"	2'-3"	3'-10 3/4"	1'-6"	4'-6"

DETAIL NO.			DETAIL NO.
501-5	MARICOPA ASSOCIATION of GOVERNMENTS STANDARD DETAIL	HEADWALL, DROP INLET	501-5

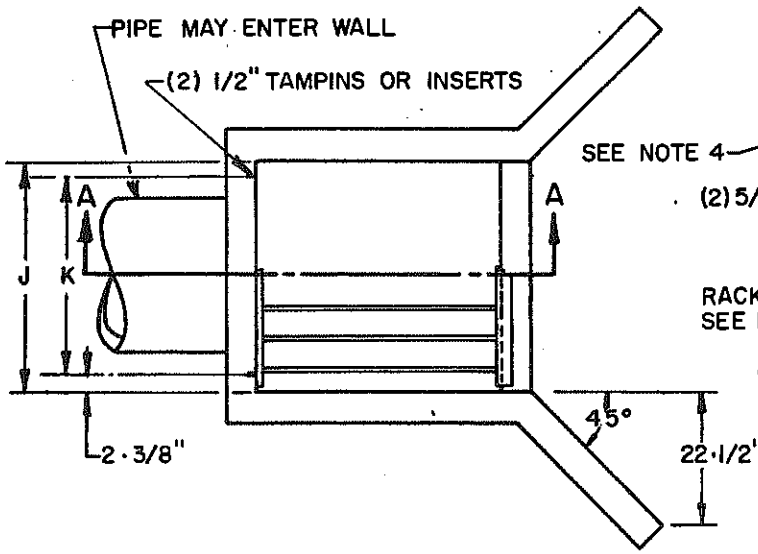

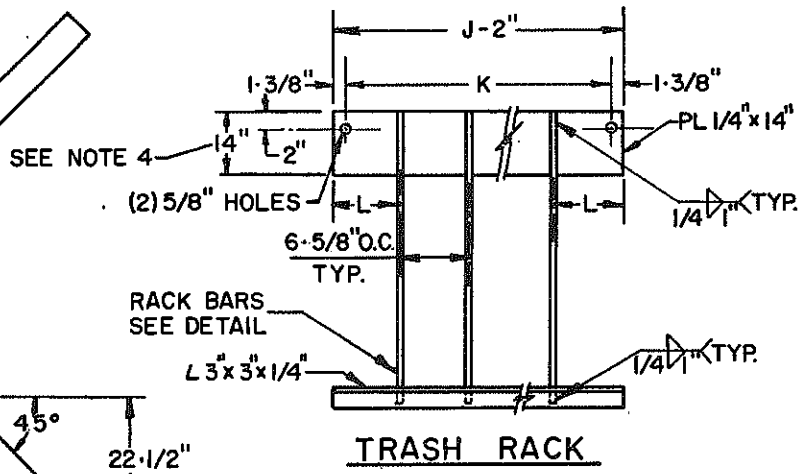

TRASH RACK

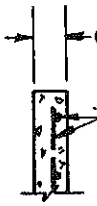

POURED WALLS

#4 REINFORCED BARS 12" O.C. BOTH WAYS, CLASS A CONCRETE SECT. 505, 725, AND 727.

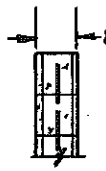

BLOCK WALLS

BLOCK HEADWALL TO HAVE ONE #4 REINF. BAR CENTERED IN EACH CORE FOR FULL HEIGHT AND CORES FILLED WITH CONCRETE OR CEMENT GROUT (3:1 RATIO). ALL BLOCKS TO BE JOINTED WITH MORTAR. PLASTERED ON EXPOSED SURFACES THEN SPRAYED WITH WHITE PIGMENTED CURING COMPOUND. SECT. 510, 727 AND 776.

SECTION A-A

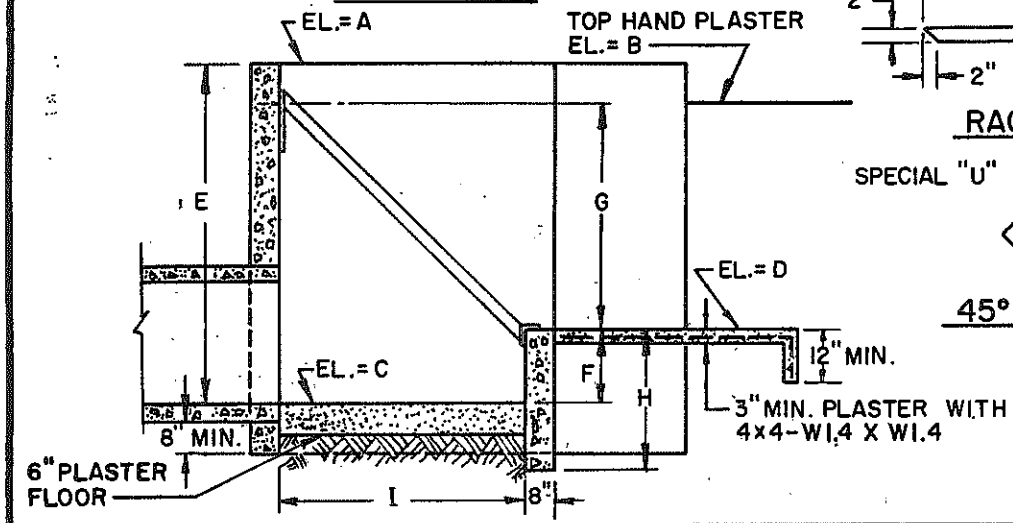

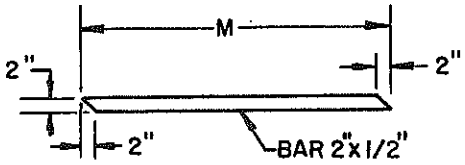

RACK BARS

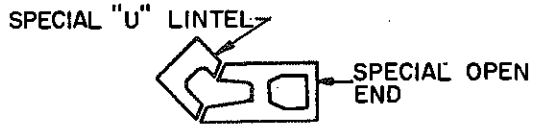

45° BLOCK CORNER

NOTES

1. REMOVE ALL SCALE FROM RACK BARS. METAL SPRAY OR PAINT WITH ONE COAT ZINC CHROMATE OR RED LEAD PRIMER (INDUSTRIAL QUALITY). OVERCOAT WITH GREY INDUSTRIAL ENAMEL SECT. 790.
2. SHAPE, COMPACT AND PLASTER NEW DITCH FROM HEADWALL TO UNDISTURBED EXISTING DITCH. PLASTER TO EXTEND TO MIN. EL. NOTED 3 FEET BEYOND CONNECTION TO UNDISTURBED EXISTING DITCH.
3. ELEVATIONS A, B, C, D AND DIMENSIONS E, F, G, H, I, J, K, L, M WILL BE SHOWN ON PLANS. DIMENSIONS SHOULD PROVIDE STANDARD SIZE BLOCK.
4. 14" PLATE SHALL NOT EXTEND BELOW TOP OF PIPE.

DETAIL NO. 502-1	MARICOPA ASSOCIATION of GOVERNMENTS STANDARD DETAIL	TRASH RACK		DETAIL NO. 502-1

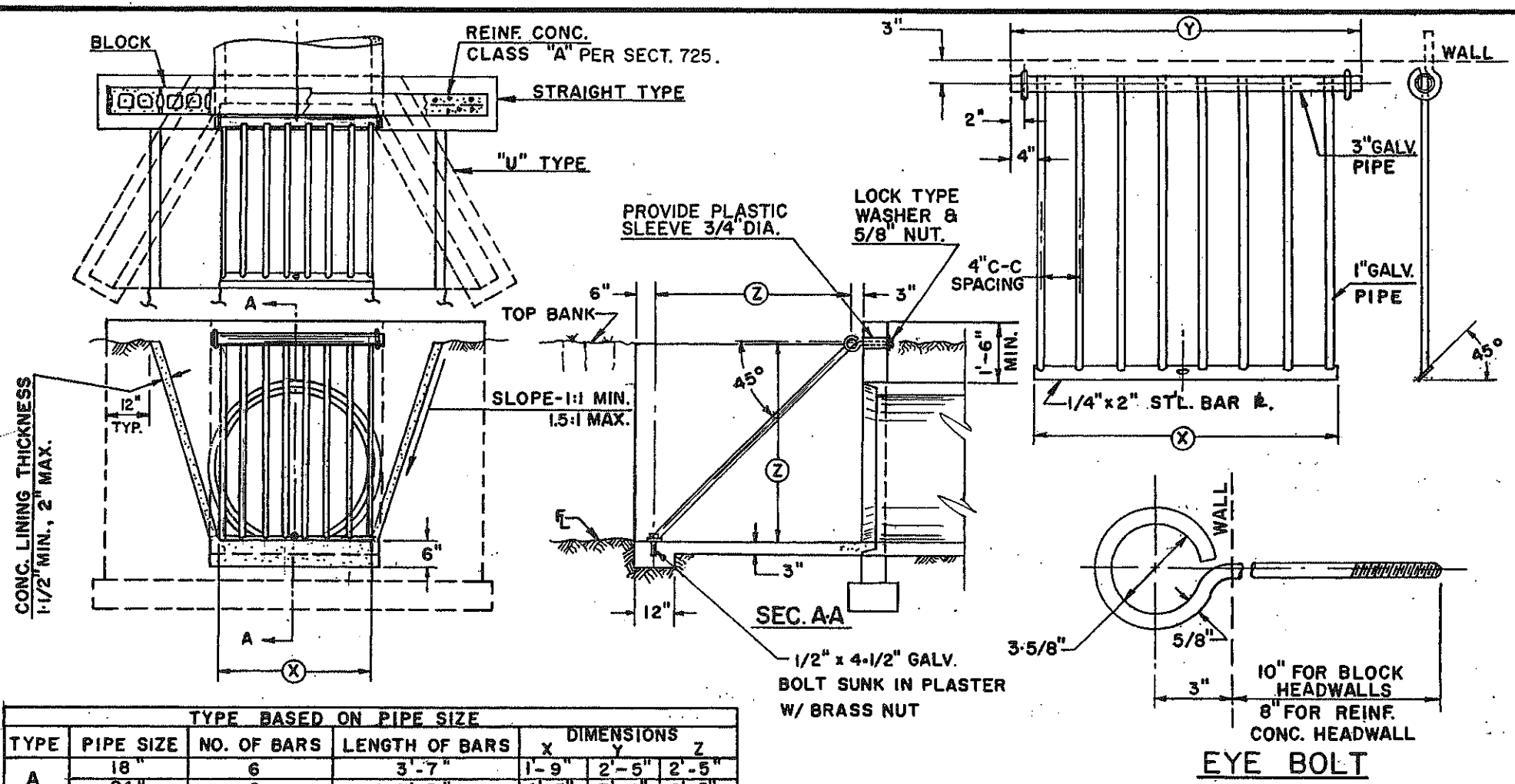

TYPE BASED ON PIPE SIZE						
TYPE	PIPE SIZE	NO. OF BARS	LENGTH OF BARS	DIMENSIONS X	Y	Z
A	18"	6	3'-7"	1'-9"	2'-5"	2'-5"
	24"	8	3'-7"	2'-5"	3'-1"	2'-5"
B	30"	10	4'-4-1/4"	3'-1"	3'-9"	2'-11-1/2"
C	36"	10	5'-1-1/2"	3'-1"	3'-9"	3'-6"
D	42"	12	5'-10-5/8"	3'-9"	4'-5"	4'-1/2"
E	48"	14	6'-7-3/4"	4'-5"	5'-1"	4'-7"

DETAIL NO.			DETAIL NO.
502-2	MARICOPA ASSOCIATION of GOVERNMENTS STANDARD DETAIL	TRASH RACK	502-2

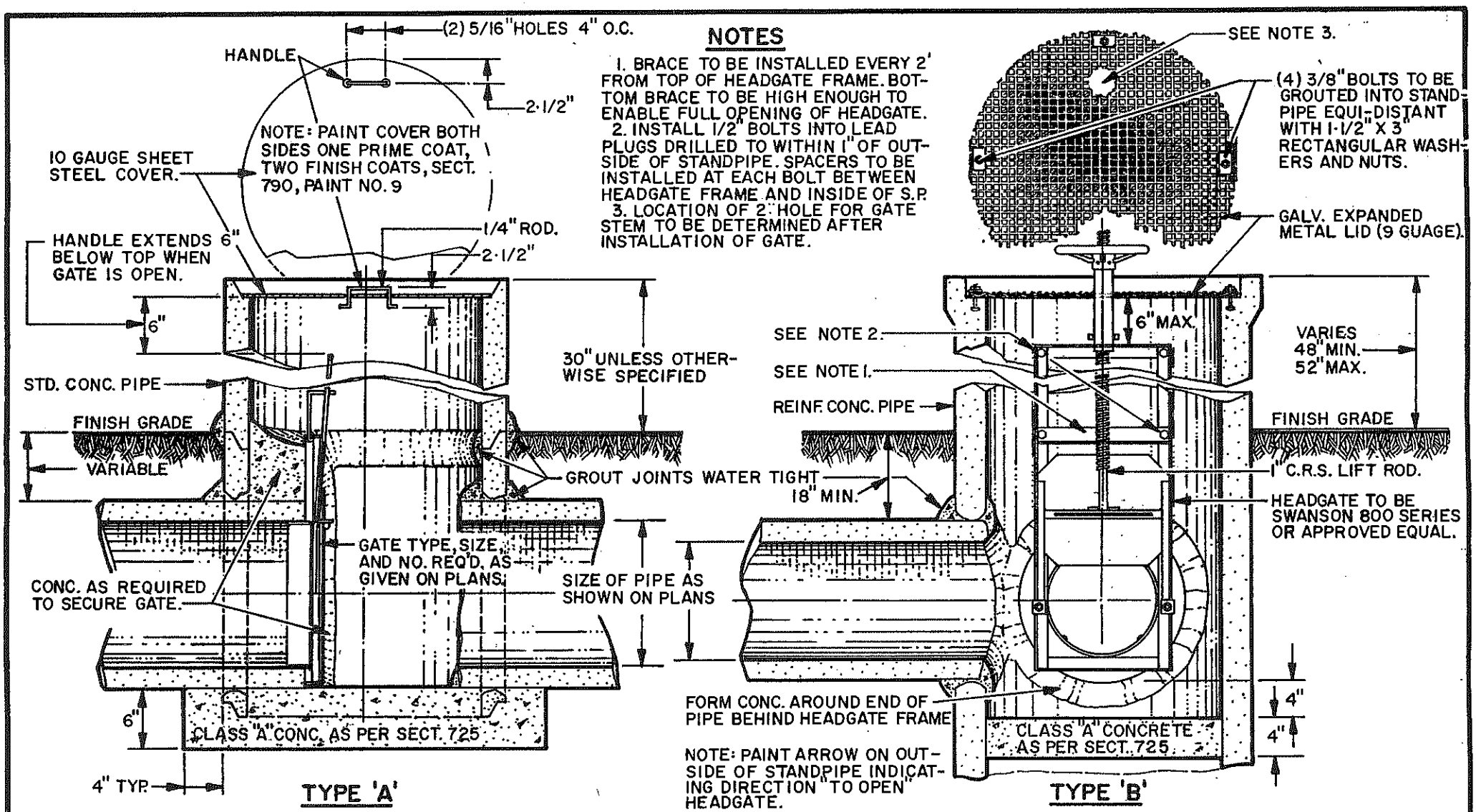

DETAIL NO. 503	MARICOPA ASSOCIATION of GOVERNMENTS STANDARD DETAIL	IRRIGATION STANDPIPE	DETAIL NO. 503

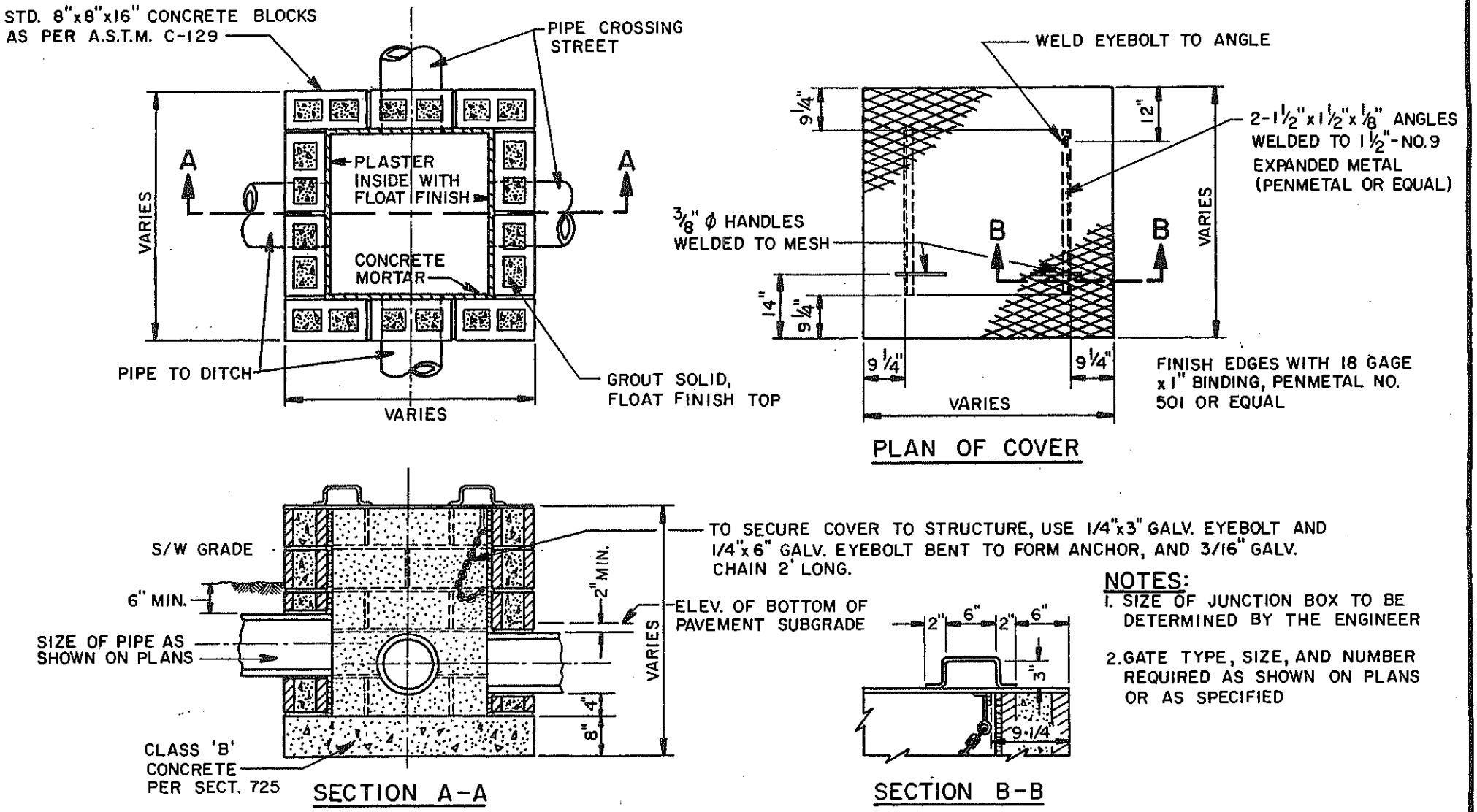

DETAIL NO. 504	MARICOPA ASSOCIATION of GOVERNMENTS STANDARD DETAIL	CONCRETE BLOCK JUNCTION BOX	DETAIL NO. 504

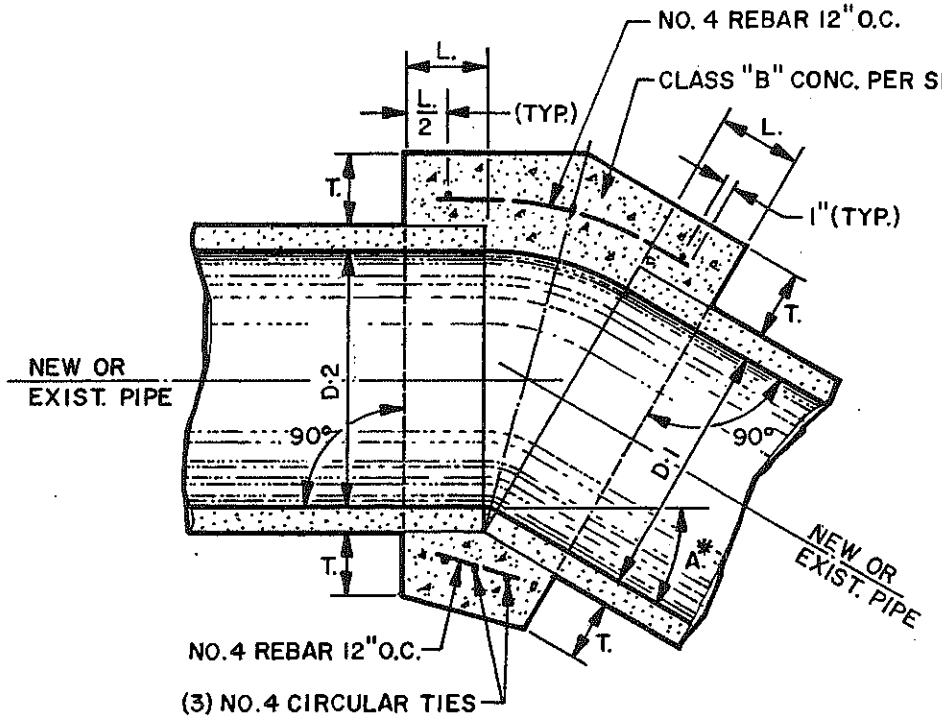

NOTES

1. A CONCRETE COLLAR IS REQUIRED WHERE PIPES OF DIFFERENT DIAMETERS OR MATERIALS ARE JOINED, OR WHERE THE CHANGE IN ALIGNMENT OR GRADE EXCEEDS THAT ALLOWED FOR ON ORDINARY JOINTS.
2. WHERE PIPES OF DIFFERENT DIAMETERS ARE JOINED WITH A CONCRETE COLLAR, L. AND T. SHOULD BE THOSE OF THE LARGER PIPE. D.= D-1, OR D-2, WHICHEVER IS GREATER.
3. FOR PIPE SIZES NOT LISTED USE NEXT SIZE LARGER.
4. OMIT REINFORCING ON PIPE 24" OR LESS IN DIAMETER.
5. WHERE REINFORCING IS REQUIRED, THE DIAMETER OF THE CIRCULAR TIES SHALL BE..... OUTSIDE DIAMETER OF PIPE + T.
6. FIELD CLOSURES OF PIPE OF THE SAME DIAMETER AND WITHOUT CHANGE IN GRADE OR ALIGNMENT SHALL BE MADE WITH A CONCRETE COLLAR.

*A= ANGLE OF DEFLECTION

TABLE		
D.	L.	T.
12"	1.0'	4"
18"	1.0'	5"
24"	1.0'	6"
36"	1.5'	8"
48"	1.5'	10"
57"	1.5'	10"
60"	1.75'	11"
66"	1.75'	11"

DETAIL NO. 505	MARICOPA ASSOCIATION of GOVERNMENTS STANDARD DETAIL	CONCRETE PIPE COLLAR		DETAIL NO. 505

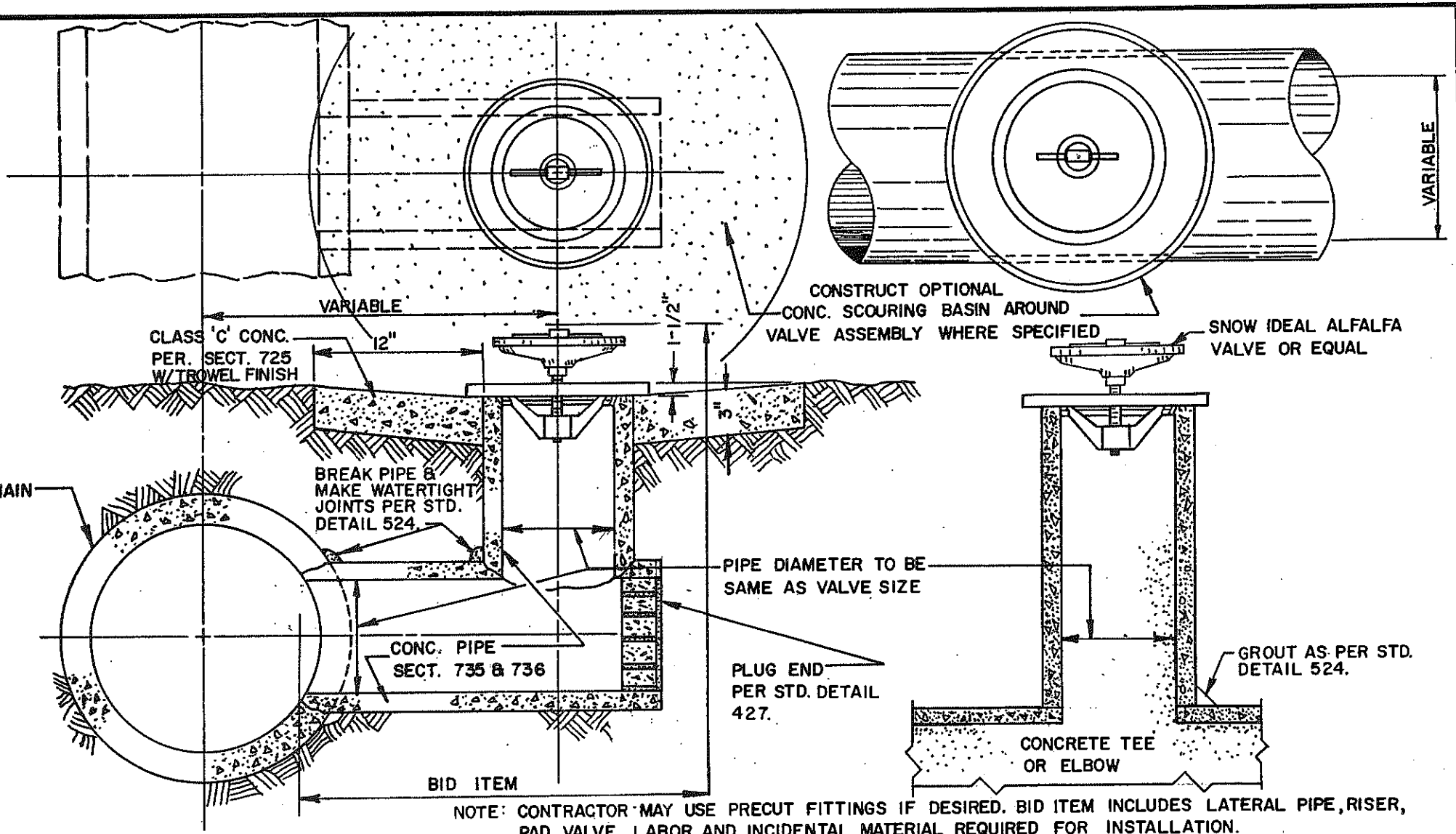

NOTE: CONTRACTOR MAY USE PRECUT FITTINGS IF DESIRED. BID ITEM INCLUDES LATERAL PIPE, RISER, PAD, VALVE, LABOR AND INCIDENTAL MATERIAL REQUIRED FOR INSTALLATION.

DETAIL NO. 506	MARICOPA ASSOCIATION of GOVERNMENTS STANDARD DETAIL	IRRIGATION VALVE INSTALLATION	DETAIL NO. 506

NOTES:

1. THIS DETAIL SHALL BE REQUIRED WHEN NEW OR EXISTING PIPE INSTALLATIONS WILL BE SUBJECT TO DAMAGE ANYTIME IN THE FUTURE DUE TO LACK OF PROPER COVER, AS DETERMINED BY THE ENGINEER.
2. FOR PIPE OVER 18" I.D. WOOD, METAL OR GYPSUM BOARD FORMS MUST BE USED TO FORM THE SIDES OF THE ENCASEMENT. GYPSUM BOARD FORMS MAY BE LEFT IN THE GROUND BELOW THE TOP OF THE ENCASEMENT. THIS SHALL BE OPTIONAL WITH POURING AGAINST TRENCH WALLS FOR ENCASEMENT OF 18" AND SMALLER PIPE.
3. FOR ALL SITUATIONS WHERE SIDE FORMS ARE USED, TRENCH WALLS SHALL BE OVER-EXCAVATED TO ALLOW SUFFICIENT ROOM TO OPERATE PROPER MECHANICAL COMPACTION EQUIPMENT.
4. CONCRETE WHICH SPILLS BEYOND 12" FROM THE SIDES OF THE PIPE FOR ANY REASON SHALL BE REMOVED BACK TO THE PROPER LINE PRIOR TO BACKFILLING.
5. SEE SECT. 601 FOR TRENCH PREPARATION. CONCRETE TO BE CLASS 'A' PER SECT. 725.
6. COVER TO BE APPROVED BY ENGINEER.

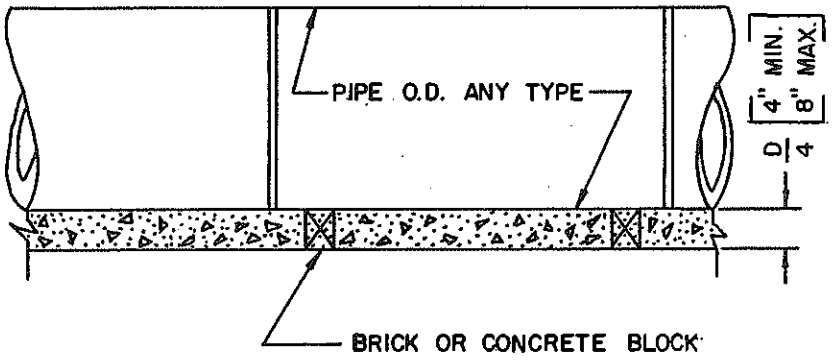

LONGITUDINAL SECTION

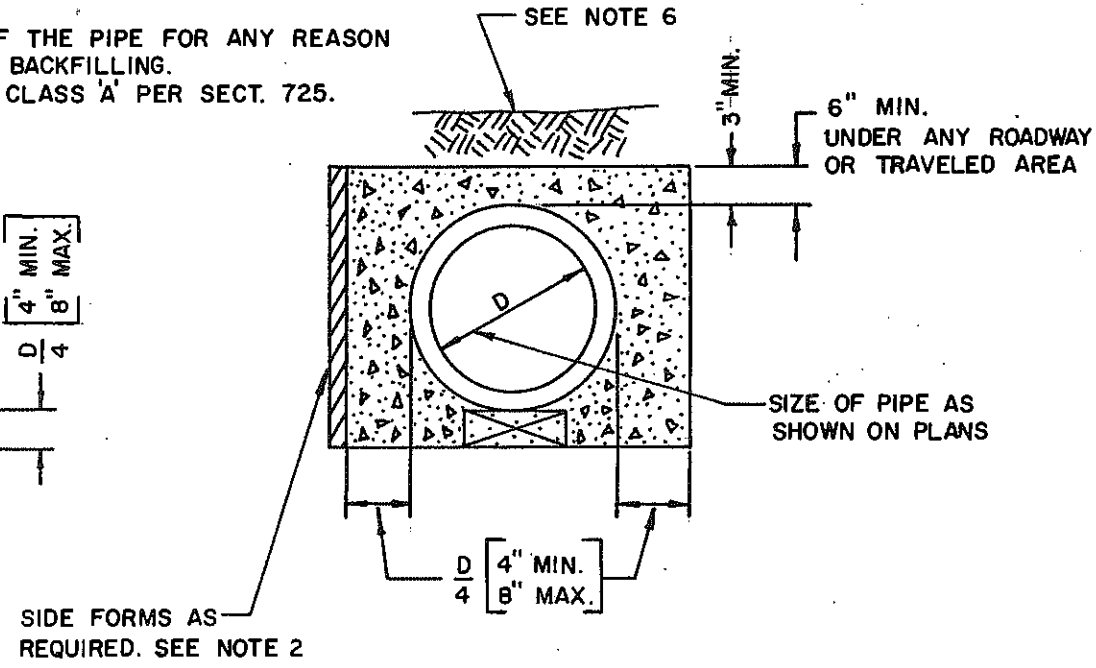

END SECTION

DETAIL NO. 507	MARICOPA ASSOCIATION of GOVERNMENTS STANDARD DETAIL	ENCASED CONCRETE PIPE (FOR SHALLOW INSTALLATION)	DETAIL NO. 507

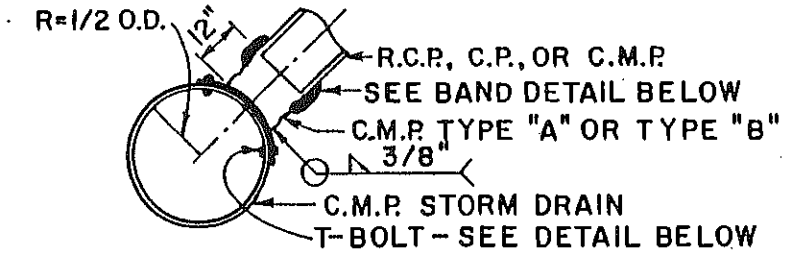

CONNECTOR CROSS SECTION

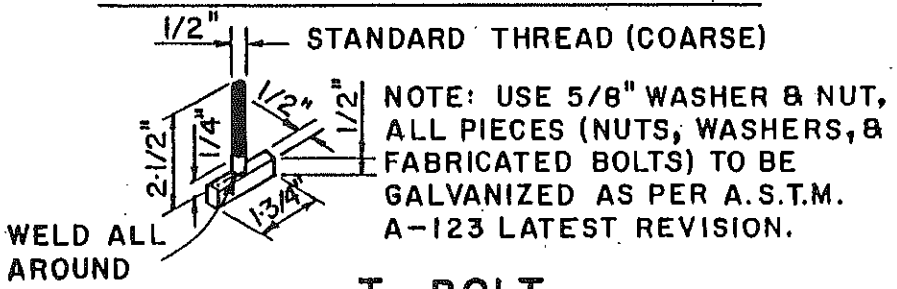

T-BOLT

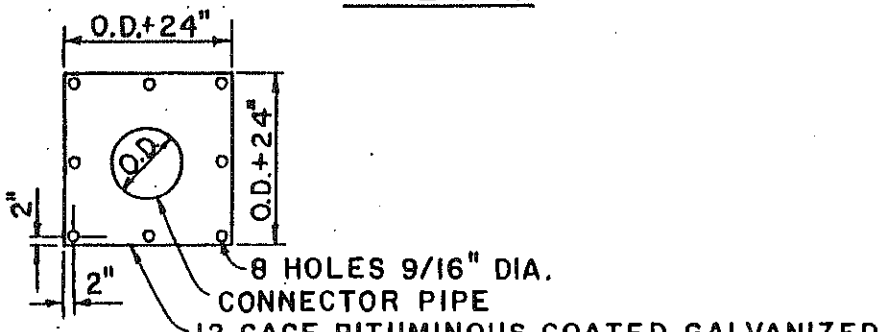

C.M.P. CONNECTION TO MAIN STORM DRAIN 24" PIPE AND SMALLER

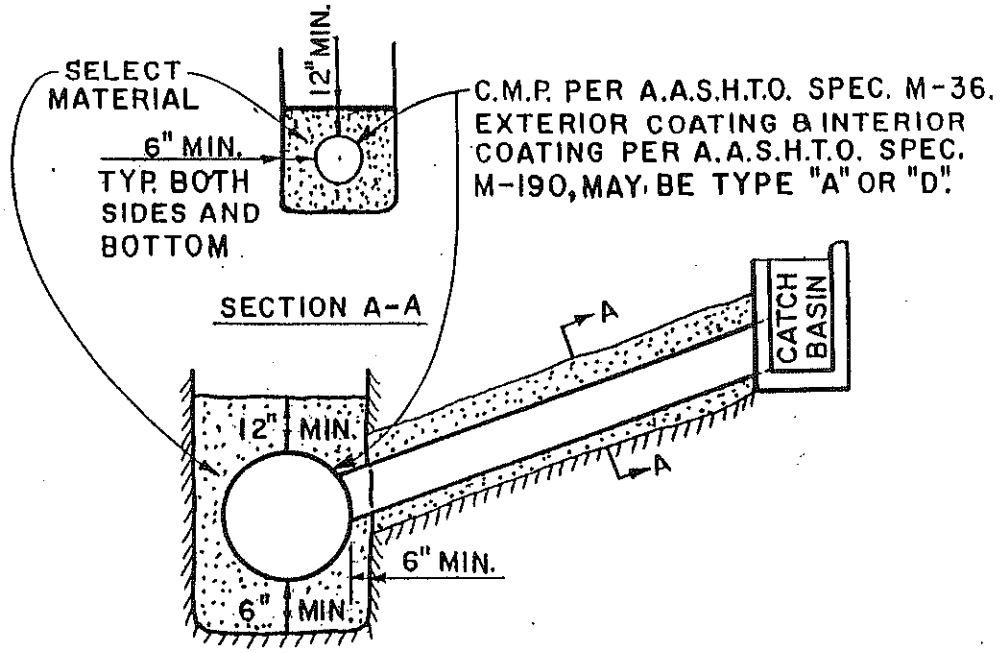

C.M.P. MAIN STORM DRAIN

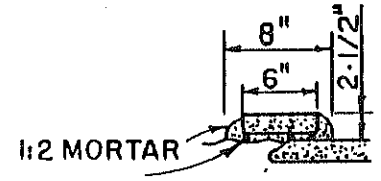

2"X 2" X 12 GA. WELDED WELDED WIRE FABRIC W/12" CIRCUMFERENTIAL OVERLAP.

BAND DETAIL

DETAIL NO. 510	MARICOPA ASSOCIATION of GOVERNMENTS STANDARD DETAIL	CORRUGATED METAL PIPE & INSTALLATION		DETAIL NO. 510

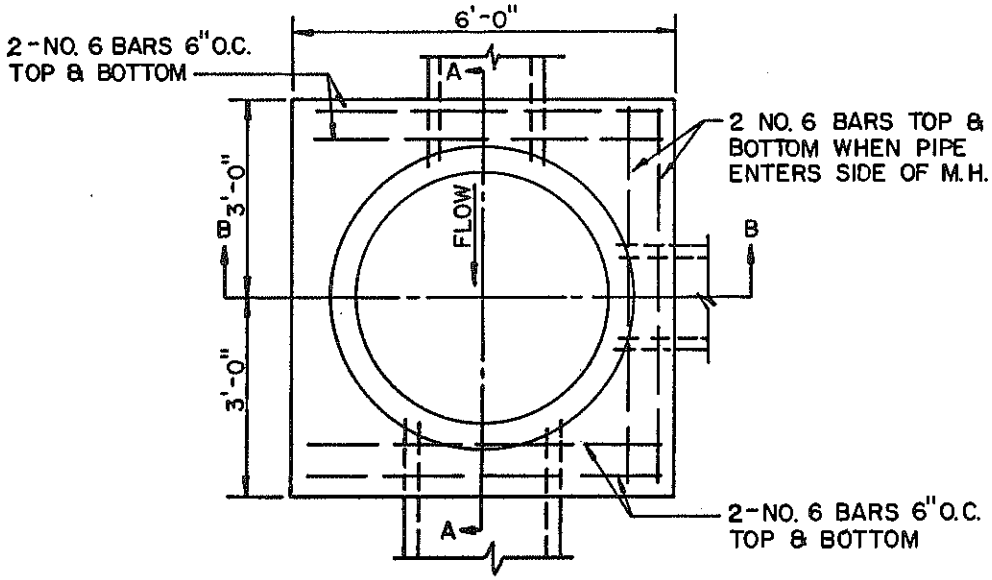

PLAN

NOTES

1. ALL CONCRETE TO BE CLASS 'A' PER SECTION 725,505.
2. MATCH SPRING LINES OF PIPES ENTERING M.H. UNLESS OTHERWISE NOTED.
3. CUT PIPES TO ALLOW SETTING OF 4' DIA. CYLINDRICAL FORM FROM 6" ABOVE MAIN LINE PIPE TO SPRING LINE. CUT PIPE 2" LARGER THAN FORM TO ALLOW 2" CONC. OVER ENDS OF ALL CUT PIPE.
4. INVERT AND BASE OF M.H. TO BE POURED AND INVERT TO BE SHAPED BY HAND TO MAKE SMOOTH TRANSITION. FINISH WITH RUBBER FLOAT.
5. CENTER M.H. ON PIPE JOINT WHERE PIPE CHANGES SIZES, LEAVING A GAP OF 12" MIN., 24" MAXIMUM.

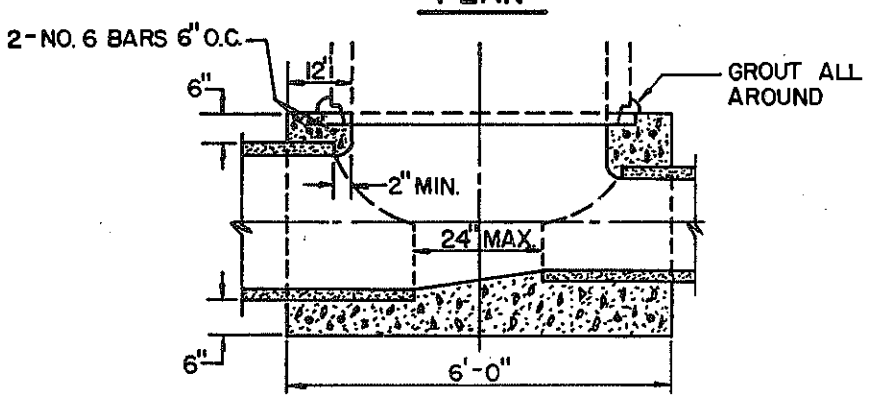

SECTION A-A

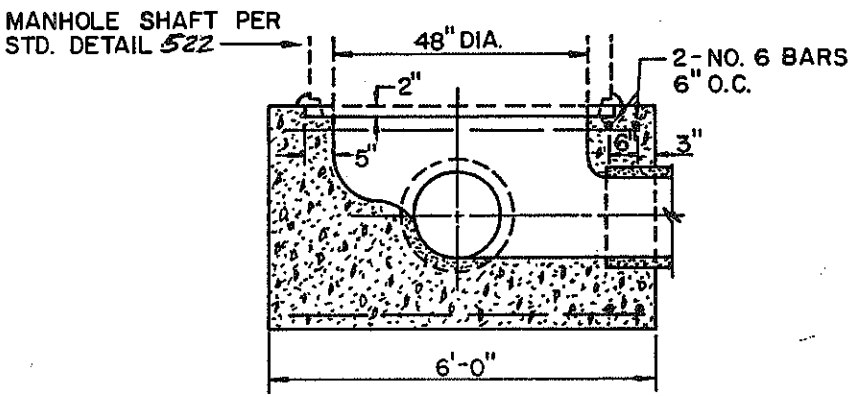

SECTION B-B

DETAIL NO. 520	MARICOPA ASSOCIATION of GOVERNMENTS STANDARD DETAIL	STORM DRAIN MANHOLE BASE (48" AND SMALLER)	DETAIL NO. 520

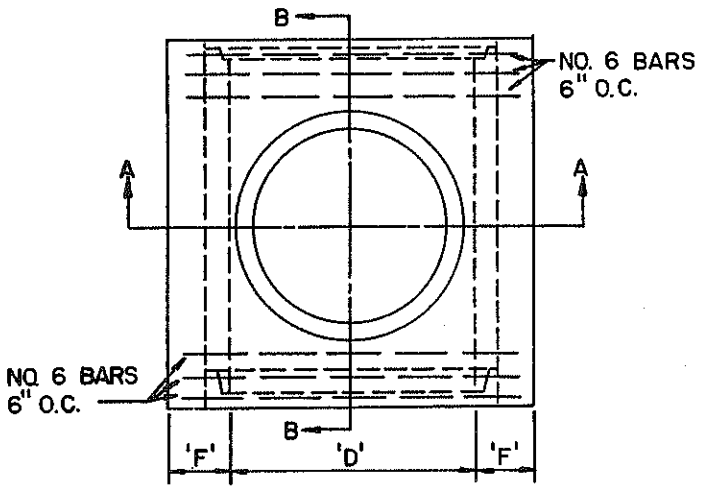

PLAN

NOTES

1. LINE PIPE & STUB MAY BE CAST MONOLITHICALLY, OR STUB MAY BE CAST ON TO LINE PIPE SECTION PRIOR TO COMPLETE CURING.
2. ALL LINE PIPE REINFORCEMENT SHALL BE TURNED UP INTO STUB.
3. THE VERTICAL STUB TO BE A.S.T.M. C-76 CLASS II WALL 'A' AND THE HORIZONTAL PIPE TO BE EQUAL TO STRENGTH OF PIPE ENTERING MANHOLE.
4. ALL REINFORCING STEEL SHALL CLEAR FACE OF CONCRETE BY 1-1/2" UNLESS SHOWN OTHERWISE.
5. CONCRETE ENCASEMENT SHALL BE CLASS 'A' PER SECT. 725,505.

TABLE OF VALUES FOR 'F'

'D'	51"	54"	57"	60"	63"	66"	69"	72"	78"	84"	90"	96"
'F'	13 3/4	14 1/2	15	15 1/2	16 1/4	16 3/4	17 1/2	18	19 1/4	20 1/2	21 3/4	23

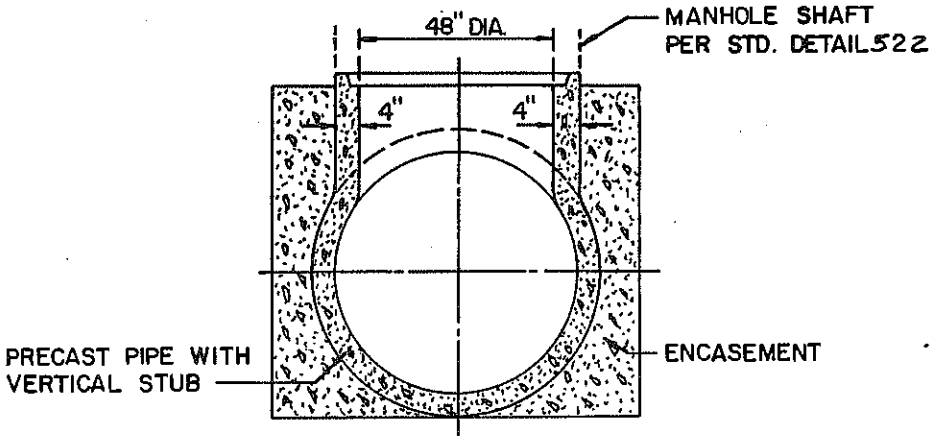

SECTION A-A

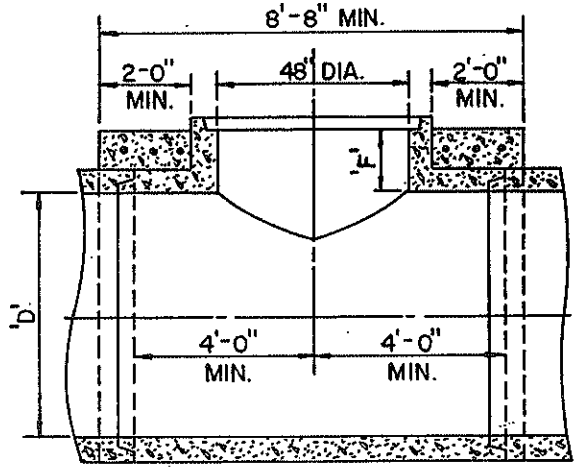

SECTION B-B

DETAIL NO. 521	MARICOPA ASSOCIATION of GOVERNMENTS STANDARD DETAIL	STORM DRAIN MANHOLE BASE (51" AND LARGER)		DETAIL NO. 521

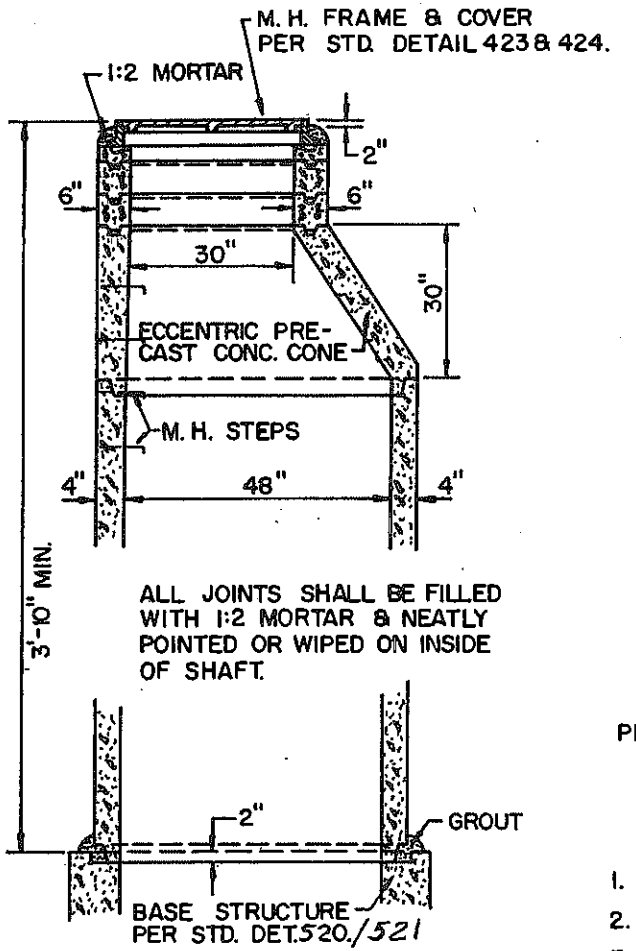

VERTICAL SECTION OF ECCENTRIC MANHOLE SHAFT

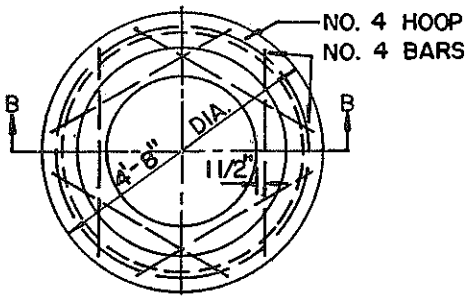

PLAN

USE WHERE THERE IS 3'-10" OR LESS COVER OVER PIPE

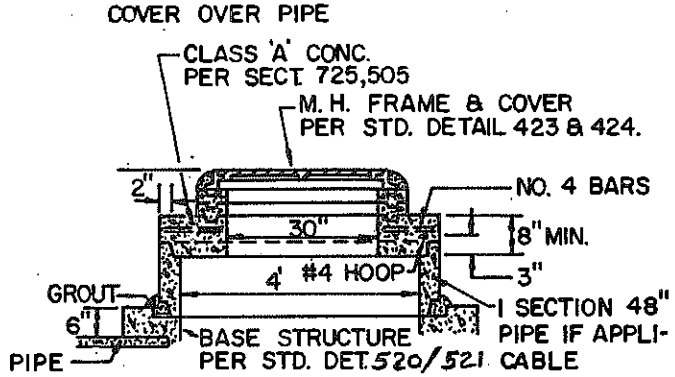

SECTION B-B

SHALLOW MANHOLE

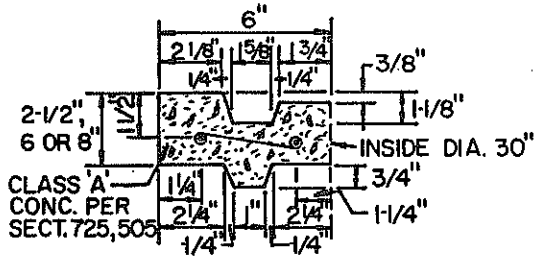

2-1/2" RINGS SHALL BE REINFORCED WITH TWO 1/4" ROUND STEEL HOOPS; 6" AND 8" RINGS SHALL BE REINFORCED WITH FOUR 1/4" HOOPS, TIED WITH NO. 14 A.S. & W. GAUGE WIRE 8" O.C.

REINFORCED CONCRETE ADJUSTING RING

NOTES

1. PRECAST CONCRETE CONES & SECTIONS TO BE A.S.T.M. & A.S.T.M. 478.
2. BRICK MAY BE USED IN LIEU OF, OR IN COMBINATION WITH CONC. ADJUSTING RINGS.
3. PRECAST CONC. SECTIONS 48" DIA. PIPE MAY BE FURNISHED IN STANDARD LENGTHS.
4. UNLESS OTHERWISE SHOWN ON PLANS, USE 2-2-1/2" PRECAST CONC. ADJUSTING RINGS ON IMPROVED STREETS & 4-2-1/2" RINGS ON UNIMPROVED STREETS.
5. M.H. STEPS SHALL BEGIN 2' BELOW FIN. GRADE & CONTINUE AT 1' INTERVALS TO APPROX. 2' ABOVE M. H. SHELF. (AS REQUIRED BY AGENCY)

DETAIL NO. 522	MARICOPA ASSOCIATION of GOVERNMENTS STANDARD DETAIL	STORM DRAIN MANHOLE SHAFT		DETAIL NO. 522

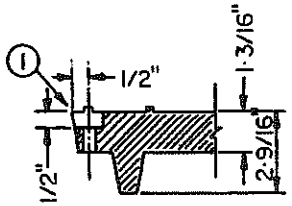

COVER SECTION

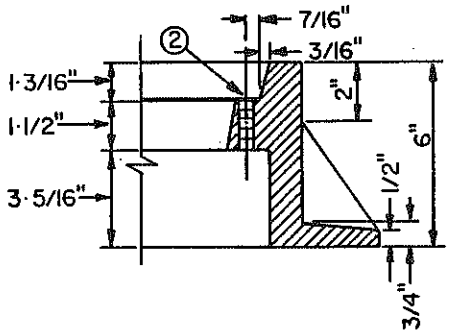

FRAME SECTION

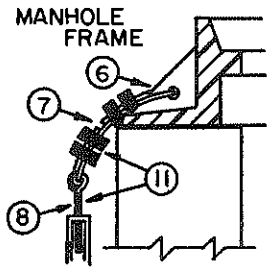

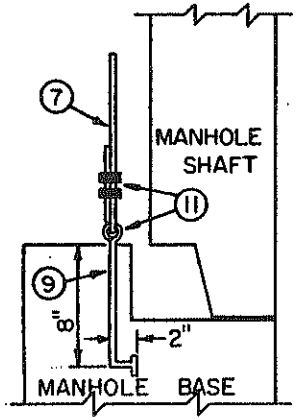

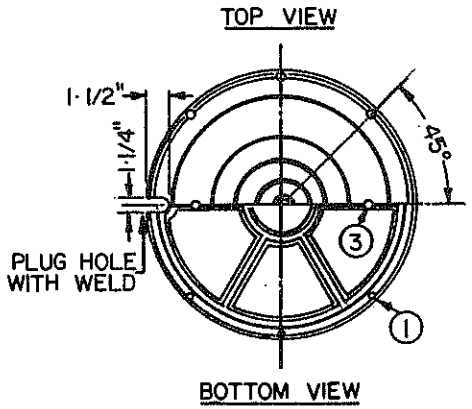

STANDARD 24" M.H.
FRAME & COVER

FOR A 30" M.H. OPENING, USE THE STD. WATER TIGHT 30" M.H. FRAME & COVER, AND ANCHOR THE FRAME AS OUTLINED IN THE INSTRUCTIONS NOTED ON THIS SHEET.

FOR A 24" M.H. OPENING, MODIFY THE STD. 24" M.H. FRAME & COVER, FOLLOWING THE NOTED PROCEDURES, ONE THROUGH FIVE:

NOTES:

(1) DRILL (8) HOLES 17/32" IN COVER FOR 1/2" CAPSCREWS, COUNTERBORE 1/2" DEEP BY 1-1/8" DIA. TO ACCOMODATE CAPSCREW AND SOCKET WRENCH. SPACE EQUALLY.

(2) DRILL (8) HOLES AND TAP FOR 1/2"–13 THREAD NATIONAL COARSE BOLT.

(3) DRILL, TAP, AND COUNTERBORE (2) HOLES FOR 1/2" CAPSCREWS TO BE USED FOR LIFTING COVER. PLUG WITH CAPSCREWS.

(4) COVER AND FRAME MUST BE MATCHED, DRILLED, AND TAPPED IN SETS.

(5) CASTING DIMENSIONS GIVEN ABOVE ARE FROM STD. DET. 424 , 24" MANHOLE FRAME AND COVER.

BOTH 24" & 30" FRAMES TO BE ANCHORED AS FOLLOWS:

(6) DRILL 1/2" HOLE IN FILLET. DO NOT USE ADJACENT FILLETS.

(7) 1/4" STAINLESS STEEL CABLE. SECURED WITH CABLE CLAMPS.

(8) 1/2" X 9" HOOK & EYE TURNBUCKLE.

(9) 1/2" EYE BOLT WITH 1" DIA. EYE.

(10) INSTALL THREE CABLES PER 24" COVER (FOUR CABLES FOR 30" COVERS). EYEBOLTS TO BE SET DIRECTLY BELOW FILLETS USED.

(11) TRIPLE WRAP TURNBUCKLES & CABLE CLAMPS WITH 1" WIDE TAPE, SAFE-T-CLAD, F.O.S. 655, OR APPROVED EQUAL.

DETAIL NO. 523	MARICOPA ASSOCIATION of GOVERNMENTS STANDARD DETAIL	PRESSURE MANHOLE		DETAIL NO. 523

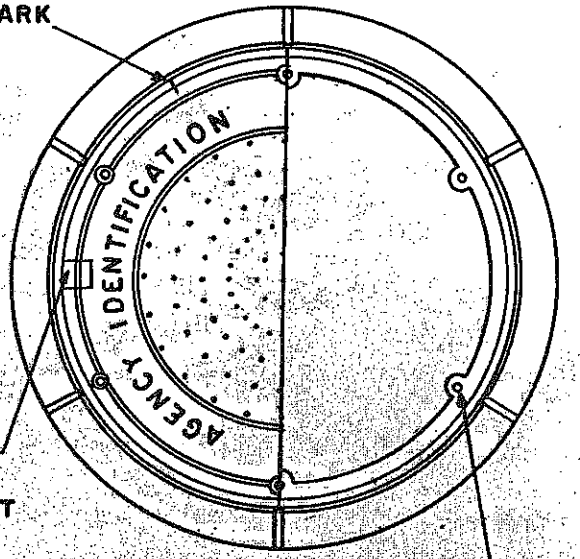

NOTES:

1. DRILL (6) HOLES IN 30" COVER (4 HOLES IN 24" COVER) 17/32" CORED RECESS FOR 1/2" CAPSCREWS. SPACE EQUALLY (304 S.S.)
2. DRILL (6) HOLES IN 30" FRAME (4 HOLES IN 24" FRAME) AND TAP FOR 1/2" – NATIONAL COARSE BOLT (HEX HEAD).
3. COVER AND FRAME MUST BE MATCH MARKED, DRILLED AND TAPPED IN SETS.
4. DIMENSIONS, LETTERING, WEIGHTS AND MATERIALS SHALL CONFORM TO STD. DET. 424.
5. REFER TO STD. DET. 523-1 FOR INSTALLATION PROCEDURES.

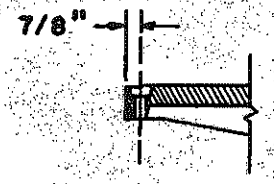

BOLT HOLE DETAIL

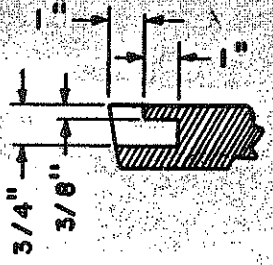

PICKHOLE DETAIL

COVER SECTION

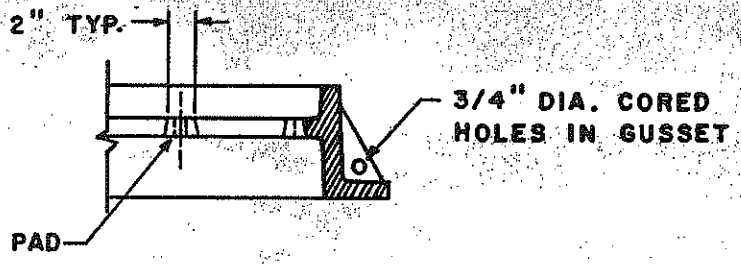

FRAME SECTION

DETAIL NO. 523-2	MARICOPA ASSOCIATION of GOVERNMENTS STANDARD DETAIL	PRESSURE MANHOLE		DETAIL NO. 523-2

TOP VIEW

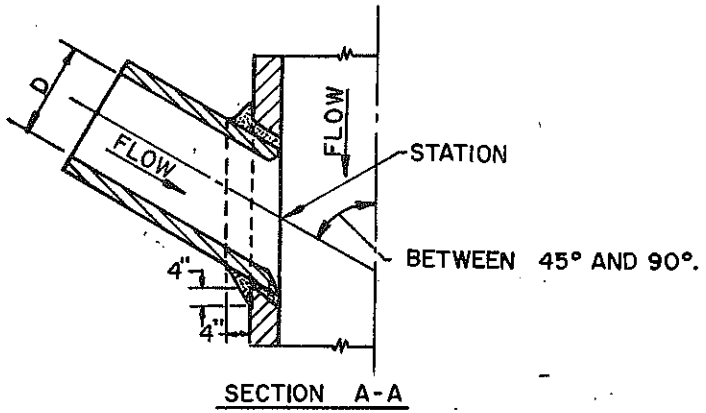

SECTION A-A

FRONT VIEW

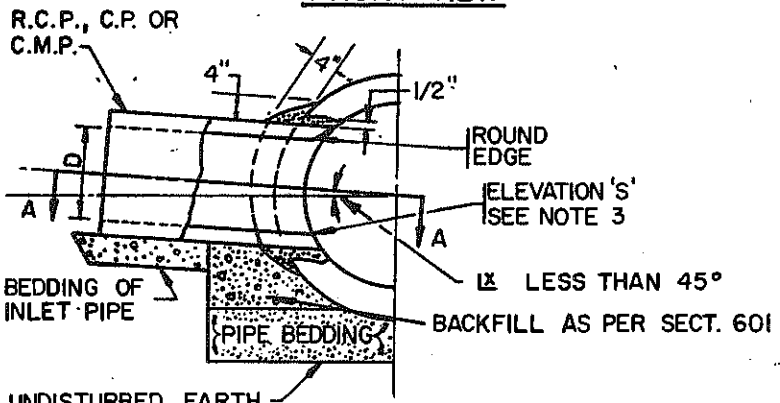

SIDE INLET

TYPE "1"

FRONT VIEW

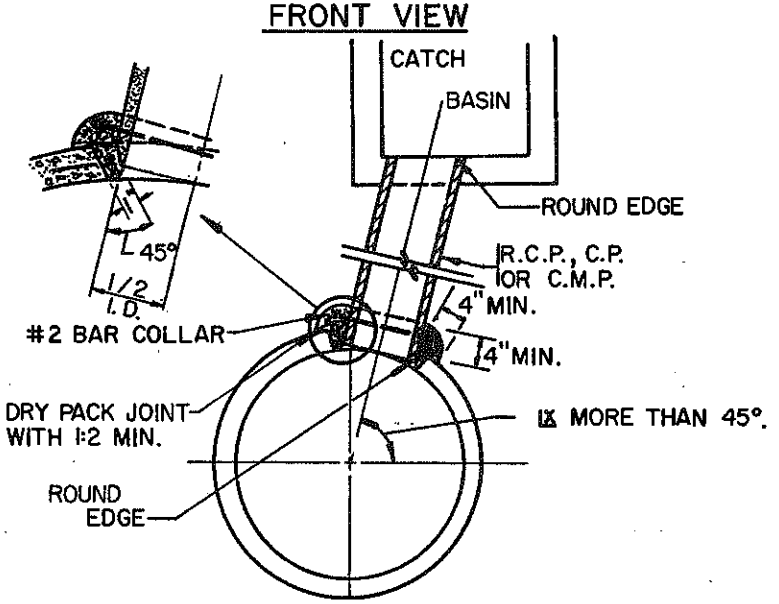

CATCH BASIN ABOVE STORM DRAIN

TYPE "2"

NOTES

1. 'D' SHALL BE 24" OR LESS. FOR LARGER VALUE OF 'D' USE MANHOLE OR JUNCTION STRUCTURE.
2. IN NO CASE SHALL THE OUTSIDE DIAMETER OF THE INLET EXCEED ONE HALF THE INSIDE DIAMETER OF THE MAIN STORM DRAIN.
3. CENTERLINE OF INLET SHALL BE ON RADIUS OF MAIN STORM DRAIN EXCEPT WHEN ELEVATION 'S' IS SHOWN ON PLANS.
4. THE MINIMUM OPENING INTO THE STORM DRAIN SHALL BE THE OUTSIDE DIAMETER OF THE CONNECTING PIPE PLUS 1 INCH.
5. IF ∠ IS 45° OR LESS USE TYPE 1.

DETAIL NO. 524	MARICOPA ASSOCIATION of GOVERNMENTS STANDARD DETAIL	STORM DRAIN LATERAL PIPE CONNECTIONS		DETAIL NO. 524

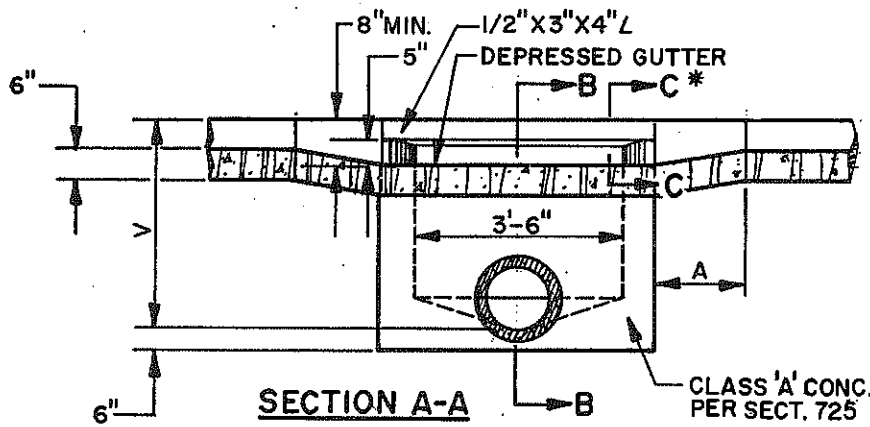

SECTION A-A

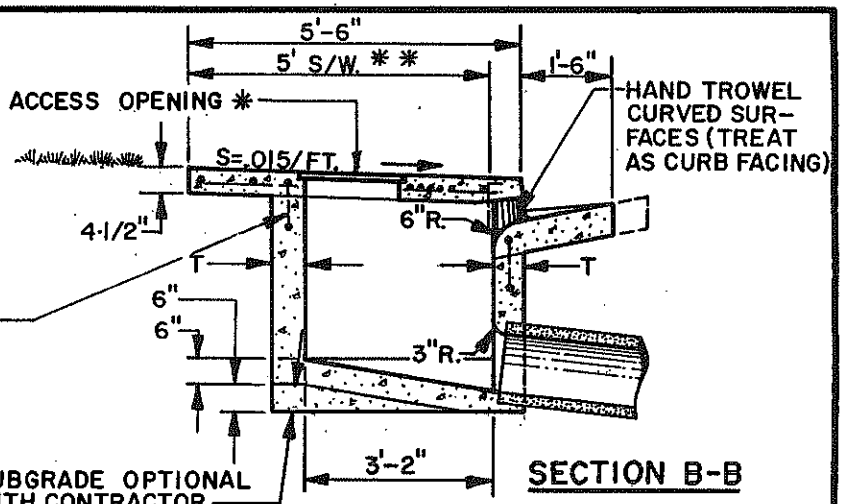

SECTION B-B

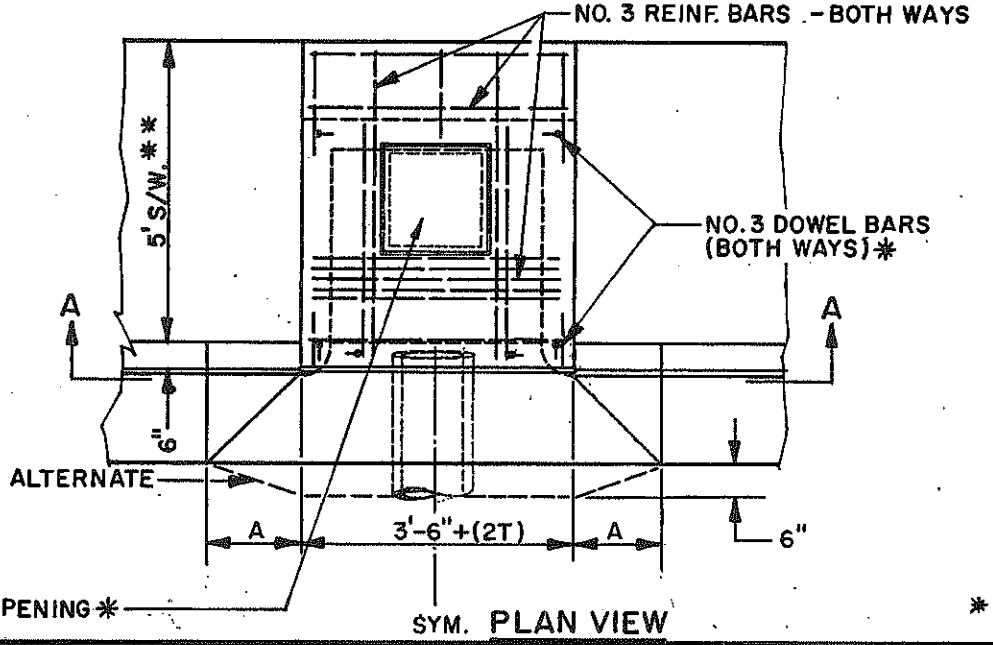

PLAN VIEW

NOTES

1. THE ENTIRE CATCH BASIN COVER MAY BE POURED IN PLACE OR PRECAST.
2. CONNECTION PIPES MAY BE PLACED IN ANY POSITION AROUND THE WALLS PROVIDED THE POSITION IS CONSISTENT WITH THE PLAN.
3. OUTLET PIPE SHALL BE TRIMMED TO FINAL SHAPE AND LENGTH BEFORE CONCRETE IS POURED.
4. FLOOR OF BASIN SHALL BE TROWELLED TO A HARD SMOOTH SURFACE AND SHALL SLOPE FROM ALL DIRECTIONS TO OUTLET.
5. ALL STRUCTURAL STEEL TO BE PAINTED ONE SHOP COAT OF NO. 1 D PAINT & TWO FIELD COATS OF NO. 10 PAINT AS PER SECT. 790

CURB	A
4"	3'-3"
6"	1'-9"
7"	1'-0"

DIMENSIONS

T=6" IF V=4' OR LESS.
T=8" IF V IS BETWEEN 4' AND 8'.
T=10" IF V IS 8' OR MORE (IF V EXCEEDS 10' SPECIAL DESIGN IS REQUIRED).
V=3-6' UNLESS OTHERWISE SPECIFIED.

* SEE DETAIL 536-1 AND 536-2 FOR DETAILS AND SECTIONS COMMON TO ALL CURB OPENING CATCH BASINS.
* * 4' IN LOCATIONS WHERE 4' S/W. IS REQUIRED.

DETAIL NO. 530	MARICOPA ASSOCIATION of GOVERNMENTS STANDARD DETAIL	3'-6" CURB OPENING CATCH BASIN · TYPE "A"		DETAIL NO. 530

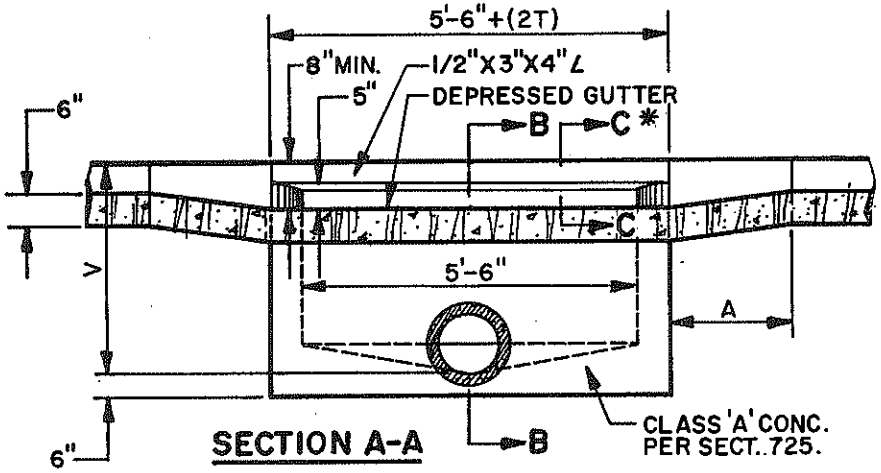

SECTION A-A

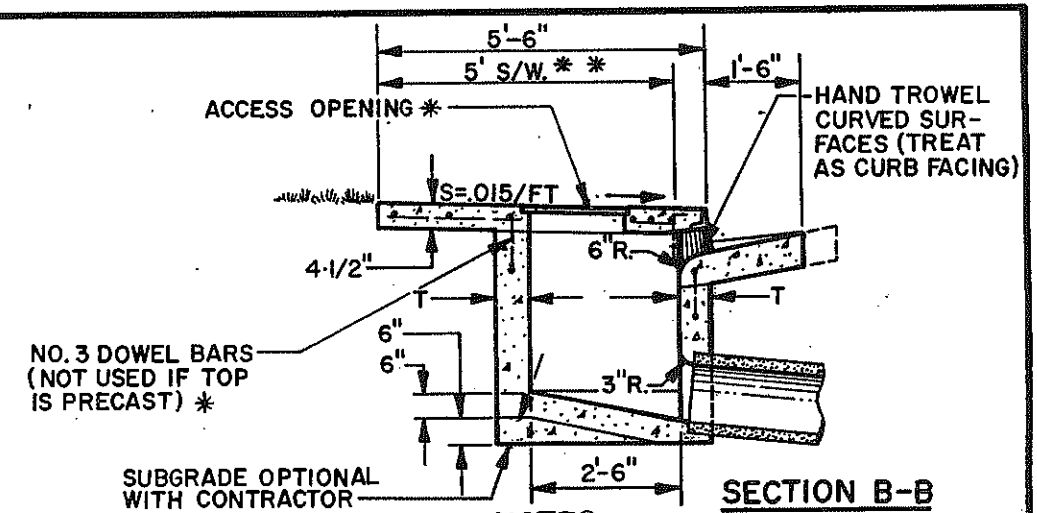

SECTION B-B

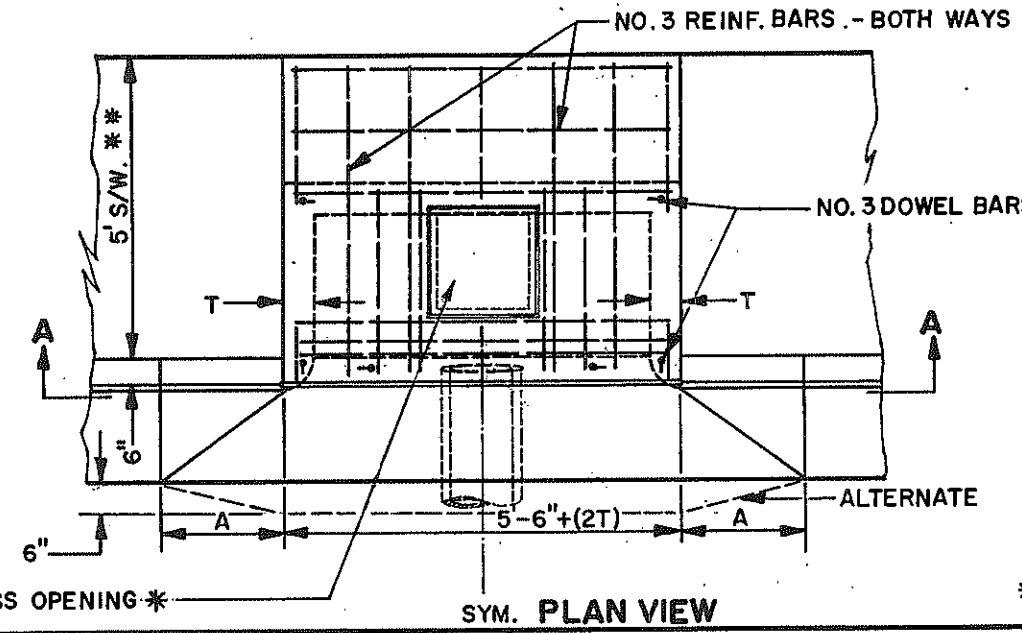

SYM. PLAN VIEW

NOTES

1. THE ENTIRE CATCH BASIN COVER MAY BE POURED IN PLACE OR PRECAST.
2. CONNECTION PIPES MAY BE PLACED IN ANY POSITION AROUND THE WALLS PROVIDED THE POSITION IS CONSISTENT WITH THE PLAN.
3. OUTLET PIPE SHALL BE TRIMMED TO FINAL SHAPE AND LENGTH BEFORE CONCRETE IS POURED.
4. FLOOR OF BASIN SHALL BE TROWELLED TO A HARD SMOOTH SURFACE AND SHALL SLOPE FROM ALL DIRECTIONS TO OUTLET.
5. ALL STRUCTURAL STEEL TO BE PAINTED ONE SHOP COAT OF NO. 1D PAINT & TWO FIELD COATS OF NO. 10 PAINT AS PER SECT. 790.

CURB	A
4"	3'-3"
6"	1'-9"
7"	1'

DIMENSIONS

T=6" IF V=4' OR LESS.
T=8" IF V IS BETWEEN 4' AND 8'.
T=10" IF V IS 8' OR MORE (IF V EXCEEDS 10" SPECIAL DESIGN IS REQUIRED).
V=3'-6" UNLESS OTHERWISE SPECIFIED.

* SEE DETAIL 536-1 AND 536-2 FOR DETAILS AND SECTIONS COMMON TO ALL CURB OPENING CATCH BASINS.

* * 4' IN LOCATIONS WHERE 4' S/W. IS REQUIRED.

DETAIL NO. 531	MARICOPA ASSOCIATION of GOVERNMENTS STANDARD DETAIL	5'-6" CURB OPENING CATCH BASIN · TYPE "B"		DETAIL NO. 531

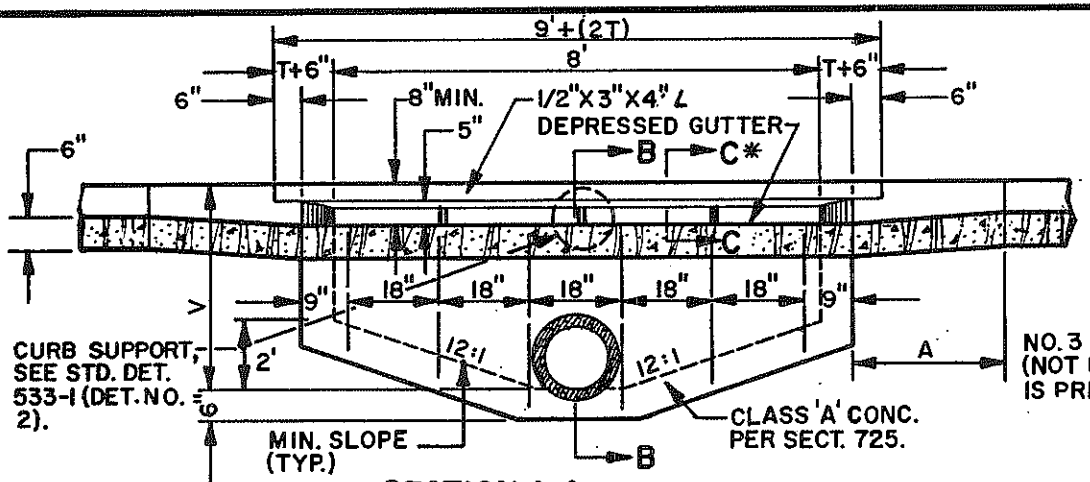

SECTION A-A

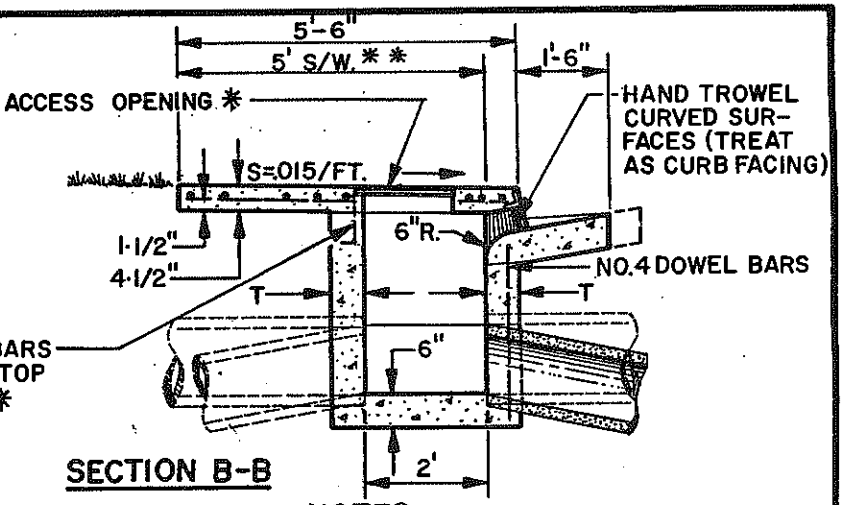

SECTION B-B

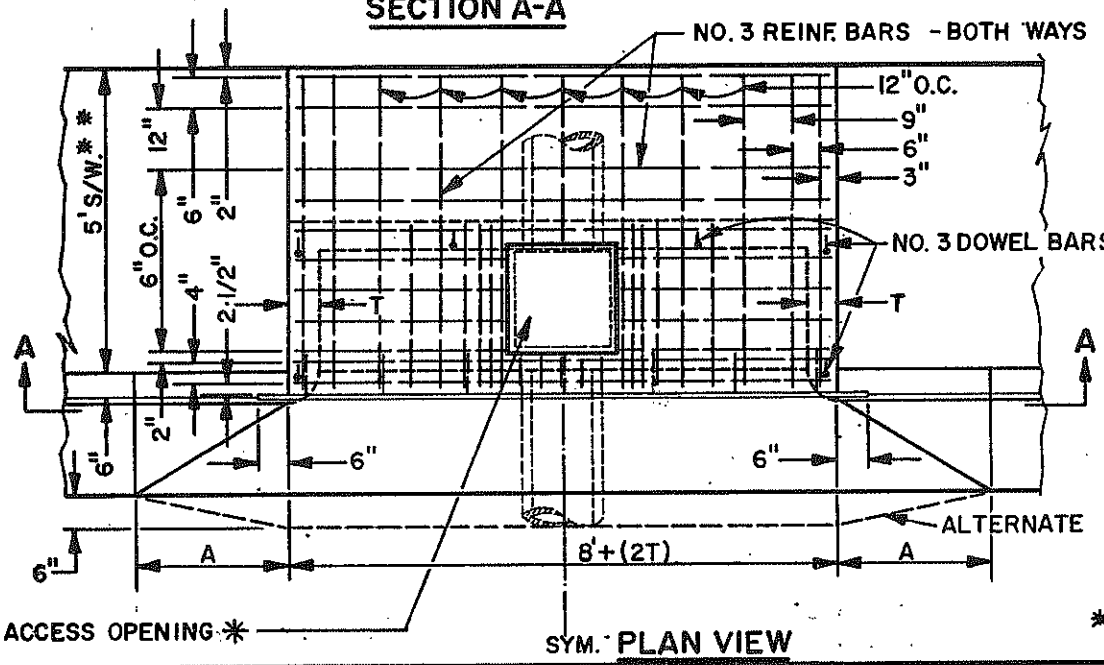

PLAN VIEW

NOTES

1. THE ENTIRE CATCH BASIN COVER MAY BE POURED IN PLACE OR PRECAST.
2. CONNECTION PIPES MAY BE PLACED IN ANY POSITION AROUND THE WALLS PROVIDED THE POSITION IS CONSISTENT WITH THE PLAN.
3. OUTLET PIPE SHALL BE TRIMMED TO FINAL SHAPE AND LENGTH BEFORE CONCRETE IS POURED.
4. FLOOR OF BASIN SHALL BE TROWELLED TO A HARD, SMOOTH SURFACE AND SHALL SLOPE FROM ALL DIRECTIONS TO OUTLET.
5. ALL STRUCTURAL STEEL TO BE PAINTED ONE SHOP COAT OF NO. 1D PAINT & TWO FIELD COATS OF NO. 10 PAINT AS PER SECT. 790.

CURB	A
4"	3'-3"
6"	1'-9"
7"	1'

DIMENSIONS

T=6" IF V=4' OR LESS.
T=8" IF V IS BETWEEN 4' AND 8'.
T=10" IF V IS 8' OR MORE (IF V EXCEEDS 10" SPECIAL DESIGN IS REQUIRED).
V=4' UNLESS OTHERWISE NOTED.

* SEE DETAIL 536-1 AND 536-2 FOR DETAILS AND SECTIONS COMMON TO ALL CURB OPENING CATCH BASINS.

** 4' IN LOCATIONS WHERE 4' S/W. IS REQUIRED.

NOT TO SCALE

DETAIL NO. 532	MARICOPA ASSOCIATION of GOVERNMENTS STANDARD DETAIL	8' CURB OPENING CATCH BASIN · TYPE "C"	DETAIL NO. 532

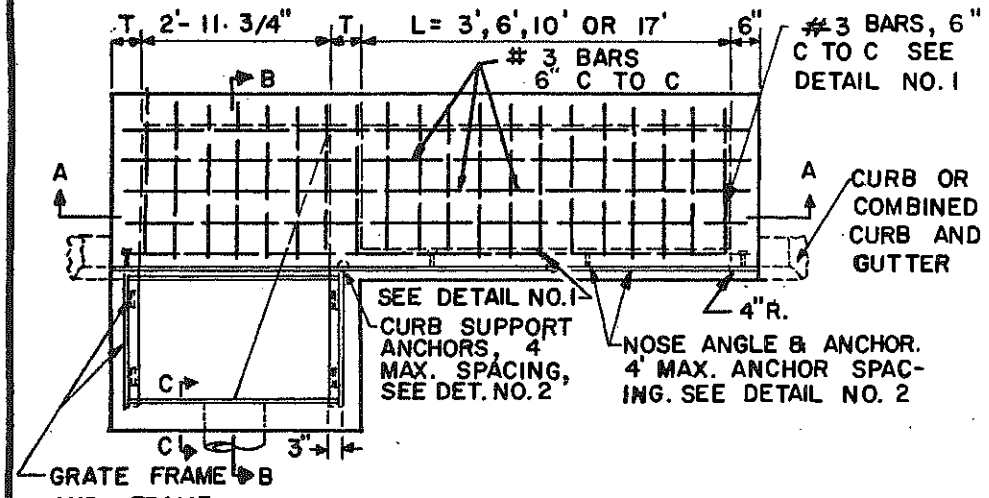

NOTE: REINFORCING BARS SHOWN ARE FOR ROOF SLAB ONLY. SEE SECTIONS FOR OTHER REINFORCING.

PLAN

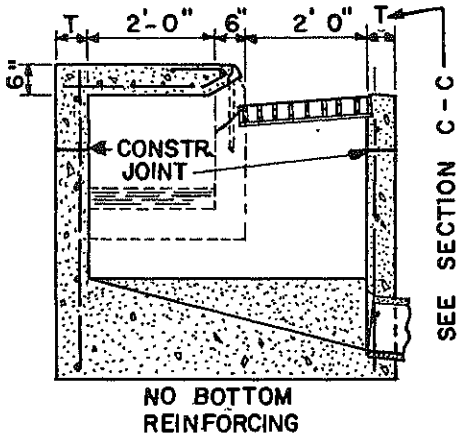

SECTION B-B

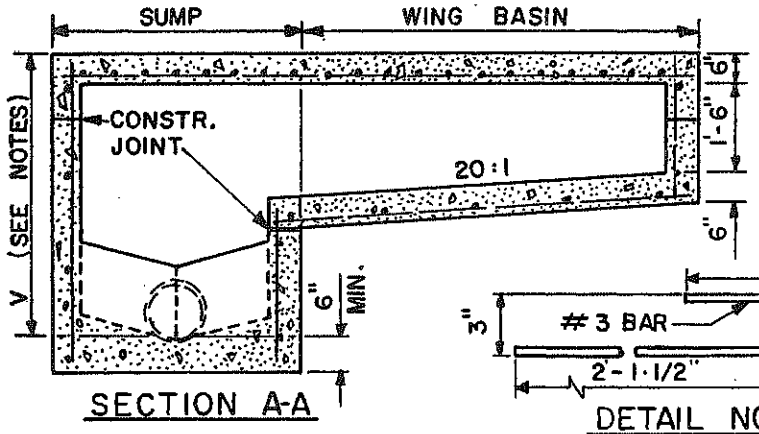

SECTION A-A

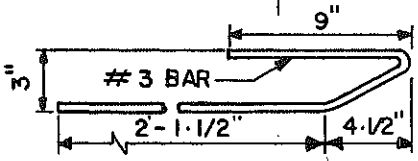

DETAIL NO. 1

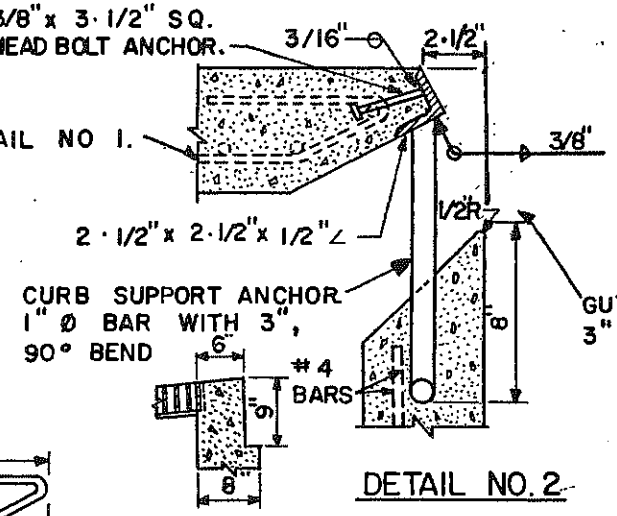

USE THIS SECTION WHEN T= 8"

SECTION C-C

DETAIL NO. 2

NOTES:

1. SINGLE C. B. (ILLUSTRATED), SUMP WITH WING BASIN UPSTREAM.
2. DOUBLE C. B. SUMP WITH SYMMETRICAL WING BASINS EACH SIDE.
3. PIPES CAN BE PLACED IN ANY WALL EXCEPT WALL ADJACENT TO A WING BASIN.
4. SUMP FLOOR SHALL HAVE A WOOD TROWEL FINISH AND A MIN. SLOPE OF 4:1 IN ALL DIRECTIONS TOWARD OUTLET PIPE.
5. ALL REINFORCING BARS SHALL BE #4, 18" C TO C BOTH WAYS AND 1.1/2" CLEAR TO INSIDE OF WALLS AND OUTSIDE OF WING BASIN FLOOR EXCEPT AS SHOWN. SEE SECT. 727.
6. ALL CONCRETE SHALL BE CLASS A, PER SECT. 725.
7. CONSTR. JOINTS SHALL BE PLACED TO MEET FIELD CONDITIONS.
8. T = 6" WHEN H IS LESS THAN 8'; 8" WHEN GREATER THAN 8' SEE SECTION C-C.

V = 3'-3" MIN.	WHEN	L = 3'
V = 3'-5" MIN.	WHEN	L = 6'
V = 3'-7" MIN.	WHEN	L = 10'
V = 4'-0" MIN.	WHEN	L = 17'

DETAIL NO. 533-1	MARICOPA ASSOCIATION of GOVERNMENTS STANDARD DETAIL	CATCH BASIN , TYPE D		DETAIL NO. 533-1

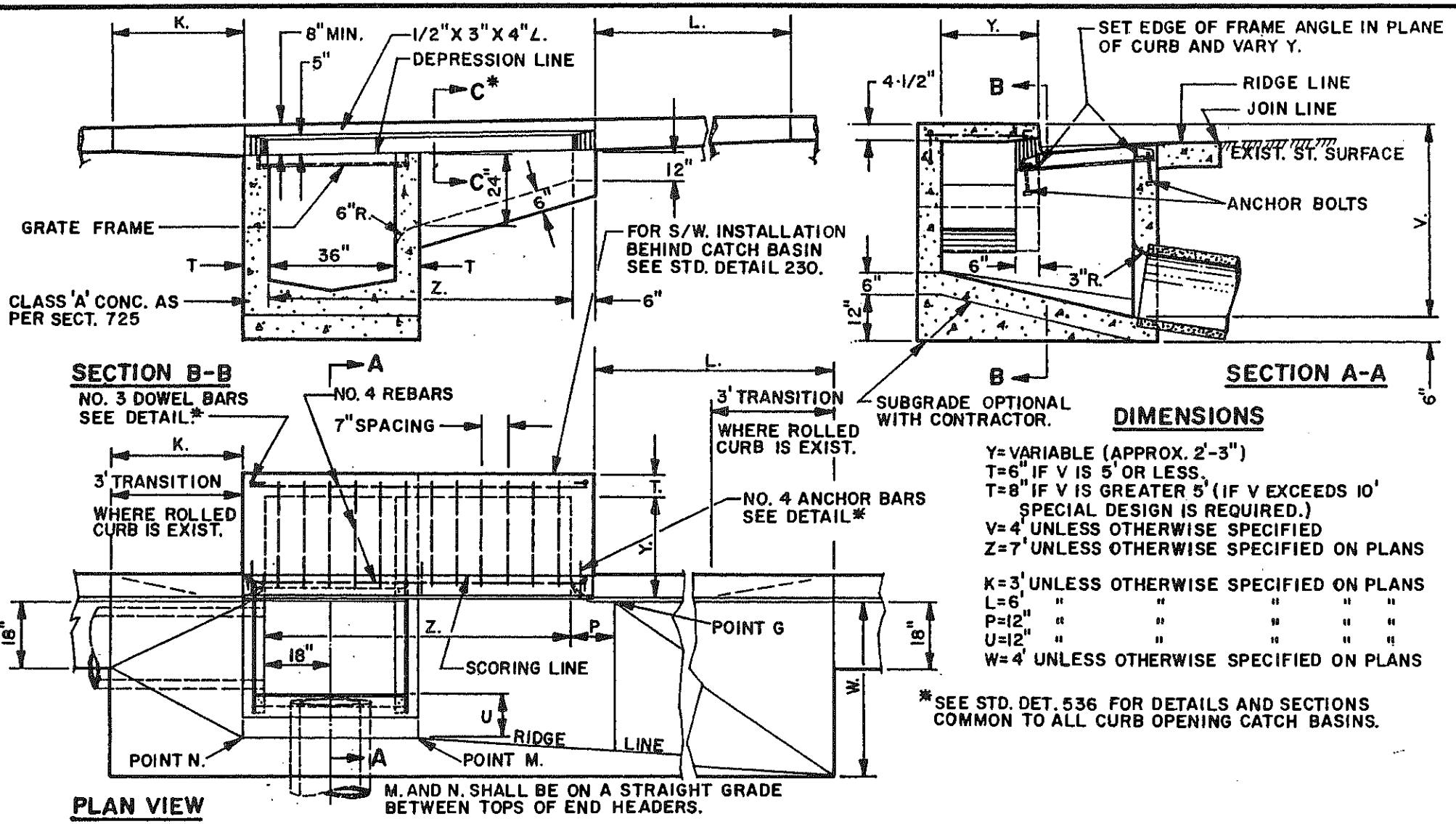

DETAIL NO. 533-2	MARICOPA ASSOCIATION of GOVERNMENTS STANDARD DETAIL	7' CURB OPENING CATCH BASIN · TYPE "D." WITH LOCAL DEPRESSION		DETAIL NO. 533-2

FRAME AND GRATE NOTES

1. FRAME MAY BE RIVETED OR WELDED. FRAME AND GRATING SHALL BE TESTED FOR ACCURACY OF FIT AND SHALL BE MARKED IN SETS BEFORE DELIVERY.
2. ALL WELDING SHALL BE IN ACCORDANCE WITH STANDARD WELDING SPECIFICATIONS.
3. CROSS BARS AND END BARS MAY BE FILLET WELDED, RESISTANT WELDED, OR ELECTROFORGED TO BEARING BARS.
4. ANCHOR BOLTS SHALL BE 1/2" DIA. x 8" WITH HEAD AND NUT.
5. ALL PARTS SHALL BE OF STRUCTURAL GRADE STEEL.

NOTES

6. ALL STRUCTURAL STEEL TO BE GALV. OR PAINTED ONE SHOP COAT OF NO. 1 PAINT AND TWO FIELD COATS OF NO. 10 PAINT.
7. CONNECTION PIPES MAY BE PLACED IN ANY POSITION AROUND THE WALLS PROVIDED THE POSITION IS CONSISTENT WITH THE PLAN.
8. OUTLET PIPE SHALL BE TRIMMED TO FINAL SHAPE AND LENGTH BEFORE CONCRETE IS POURED.
9. FLOOR OF BASIN SHALL BE TROWELED TO A HARD, SMOOTH SURFACE AND SHALL SLOPE FROM ALL DIRECTIONS TO OUTLET.
10. REINFORCING STEEL CLEARANCE SHALL BE 1" FROM BOTTOM OF SLAB.

LOCAL DEPRESSION NOTES

11. LOCAL DEPRESSION IS CONSTRUCTED ONLY WHEN SPECIFIED ON PLANS.
12. CONCRETE IN LOCAL DEPRESSION SHALL BE NOT LESS THAN 8" THICK.
13. CURB FACES AT CATCH BASIN OPENING AND POINT G SHALL BE THAT OF THE EXIST. CURB FACE PLUS 4" OR AS OTHERWISE SHOWN.
14. ELEVATIONS AT THE OUTER CORNERS OF THE LOCAL DEPRESSION SHOWN ON THE PLANS ARE FOR THE FINISHED SURFACE.

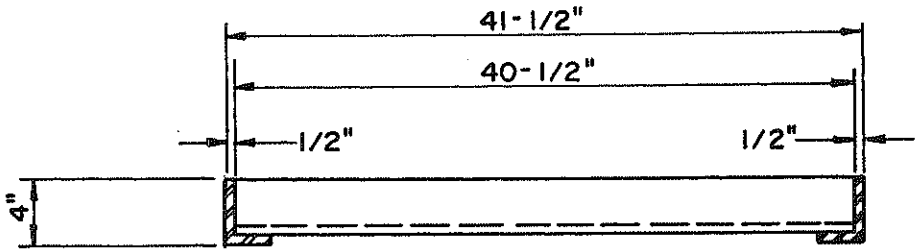

SECTION A-A

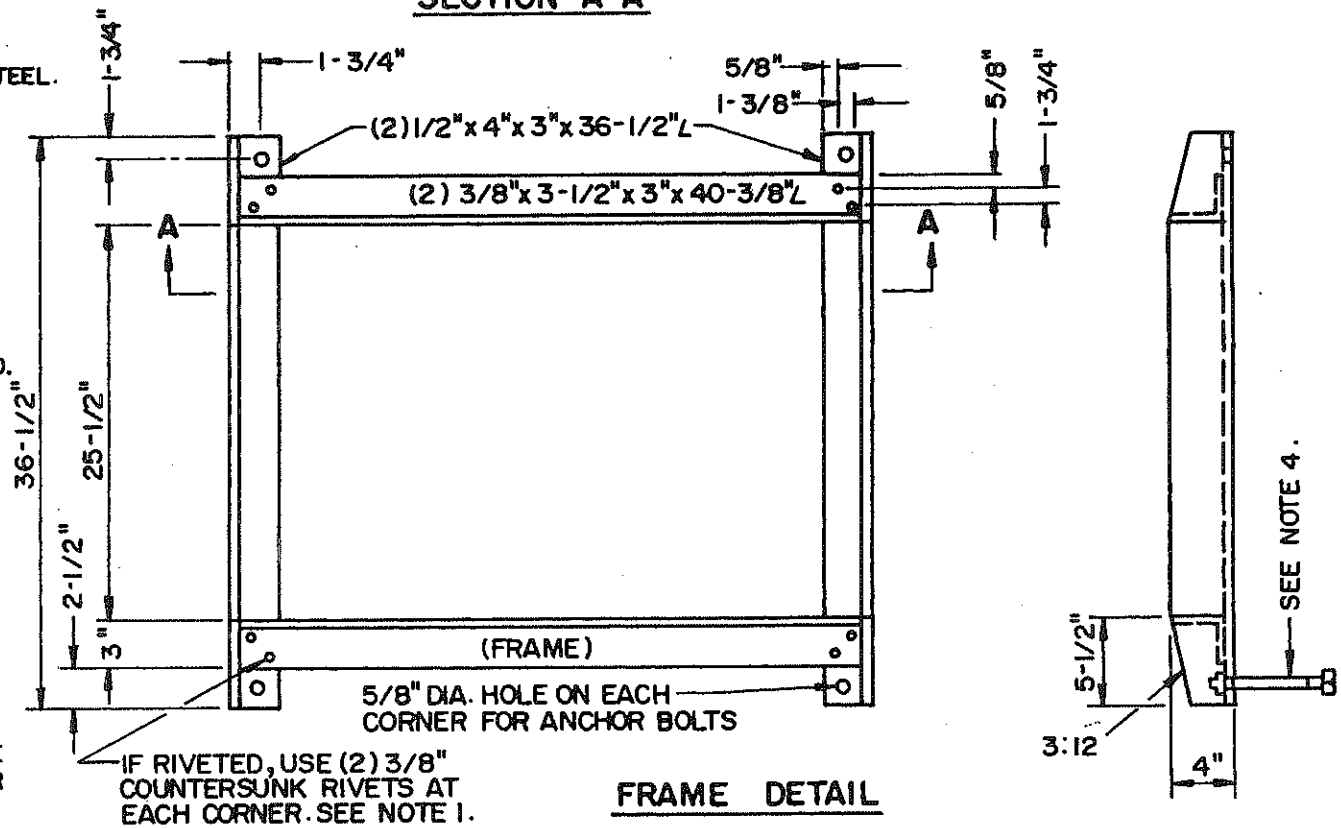

FRAME DETAIL

DETAIL NO. 533-3	MARICOPA ASSOCIATION of GOVERNMENTS STANDARD DETAIL	7' CURB OPENING CATCH BASIN · TYPE "D." WITH LOCAL DEPRESSION		DETAIL NO. 533-3

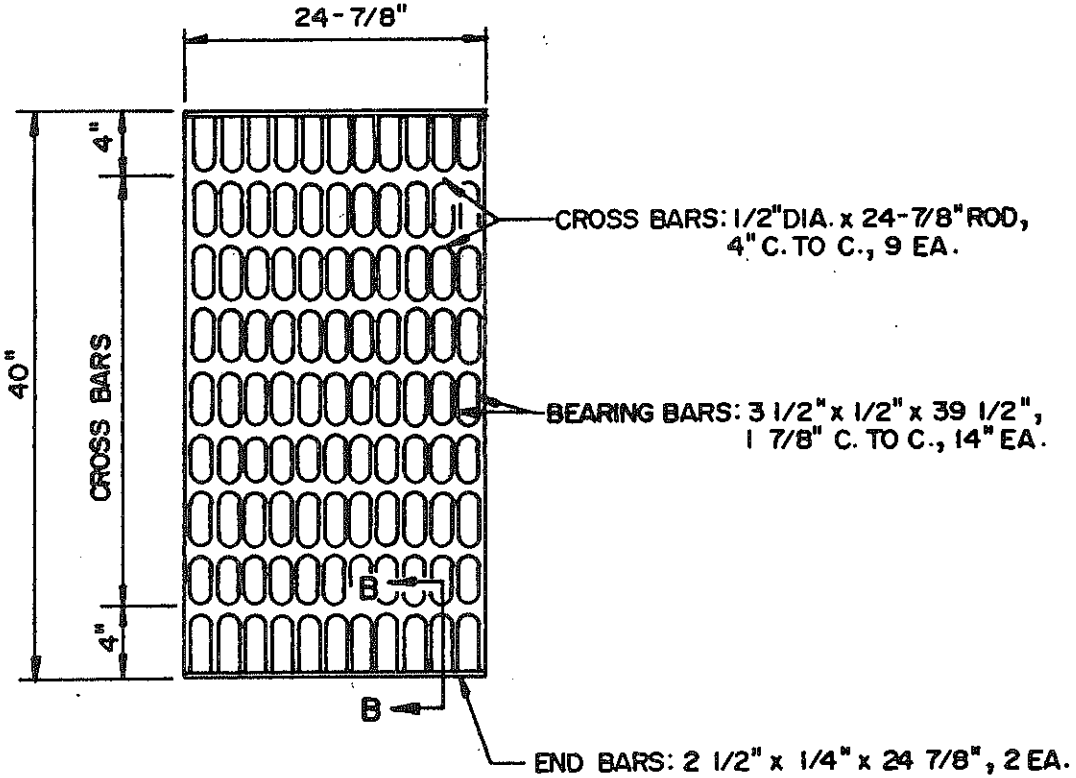

GRATE DETAIL

N.T.S.

GRATE OPENING: 4.344 SQ.FT.

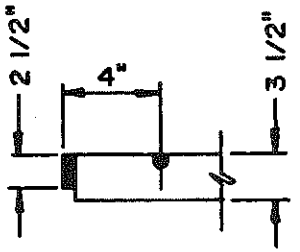

SECTION B - B

DETAIL NO. 533-4	MARICOPA ASSOCIATION of GOVERNMENTS STANDARD DETAIL	7' CURB OPENING CATCH BASIN - TYPE "D" GRATE DETAILS		DETAIL NO. 533-4

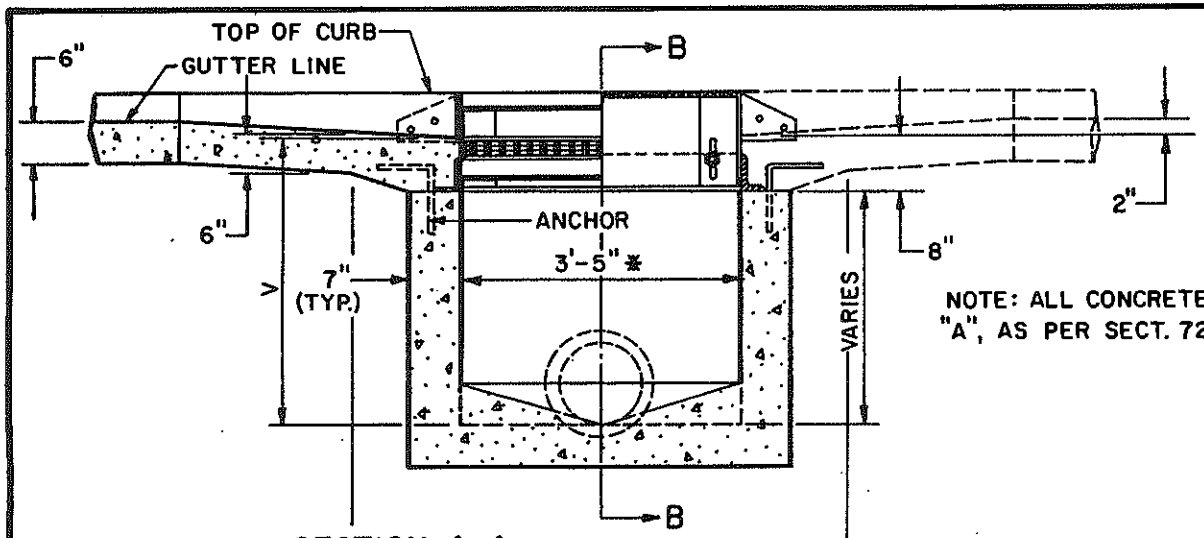

NOTE: ALL CONCRETE, CLASS "A", AS PER SECT. 725

SECTION A-A

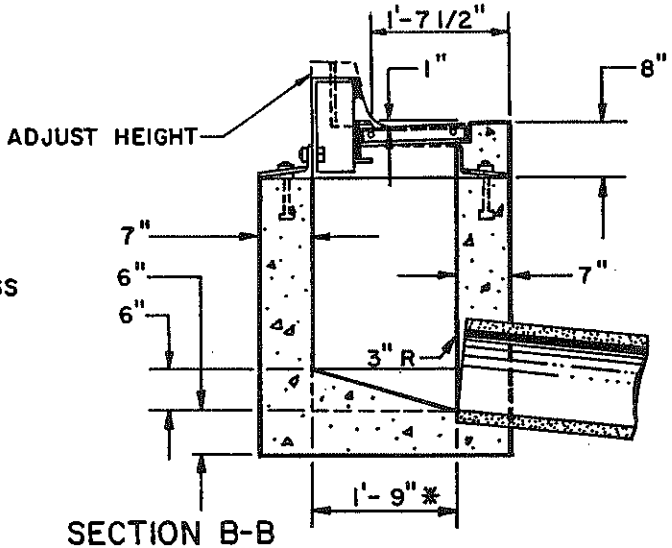

SECTION B-B

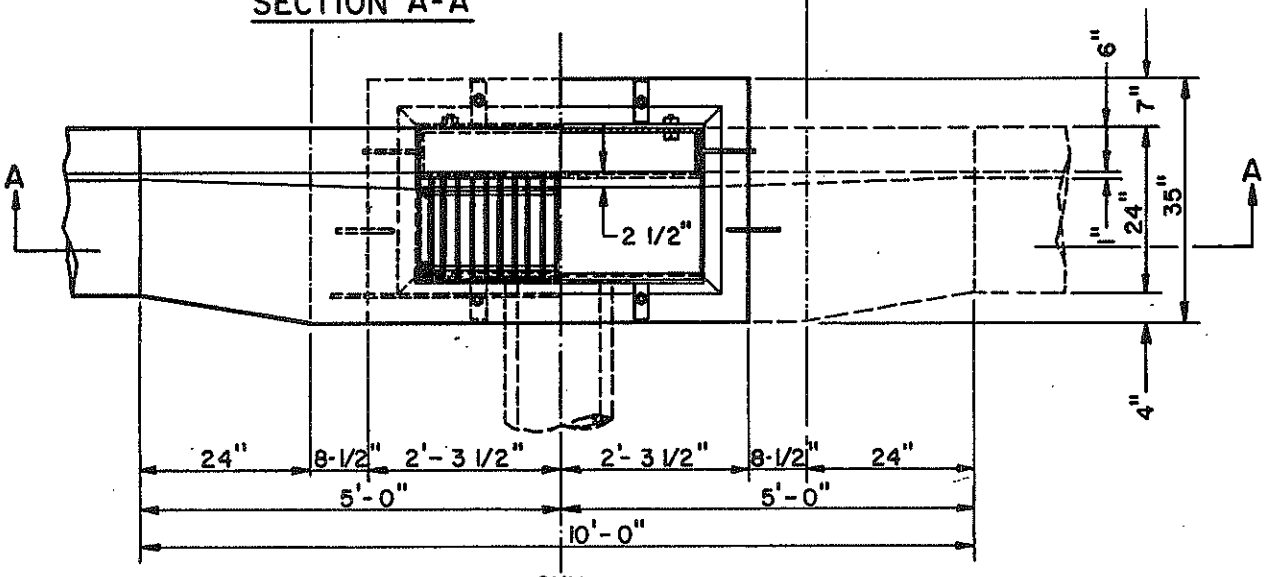

HALF PLAN GUTTER & GRATE SYM. HALF PLAN FRAME & ANCHORS

NOTES

1. ADJUSTABLE CURB, FRAME, AND GRATING UNITS SHALL BE STRUCTURAL STEEL OR CAST IRON.
2. PIPES MAY ENTER OR LEAVE ANY WALL. BOTTOM OF BOX TO BE SLOPED TO OUTLET PIPE FROM ALL DIRECTIONS AND TROWELLED TO A HARD SMOOTH SURFACE.
3. CONNECTION PIPES MAY BE PLACED IN ANY POSITION AROUND THE WALLS PROVIDED THE POSITION IS CONSISTENT WITH THE PLAN.
4. OUTLET PIPE SHALL BE TRIMMED TO FINAL SHAPE AND LENGTH BEFORE CONCRETE IS POURED.
5. ALL STRUCTURAL STEEL TO BE PAINTED ONE SHOP COAT OF NO. 1 PAINT AND TWO FIELD COATS OF NO. 10 PAINT AS PER SECT. 790.

DIMENSION

V = 3'-0" UNLESS OTHERWISE SPECIFIED.
*DIMENSIONAL CHANGE WITH STD. DETAIL 534-3 AND STD. DETAIL 534-4.

DETAIL NO. 534-1	MARICOPA ASSOCIATION of GOVERNMENTS STANDARD DETAIL	CATCH BASIN · TYPE "E"	DETAIL NO. 534-1

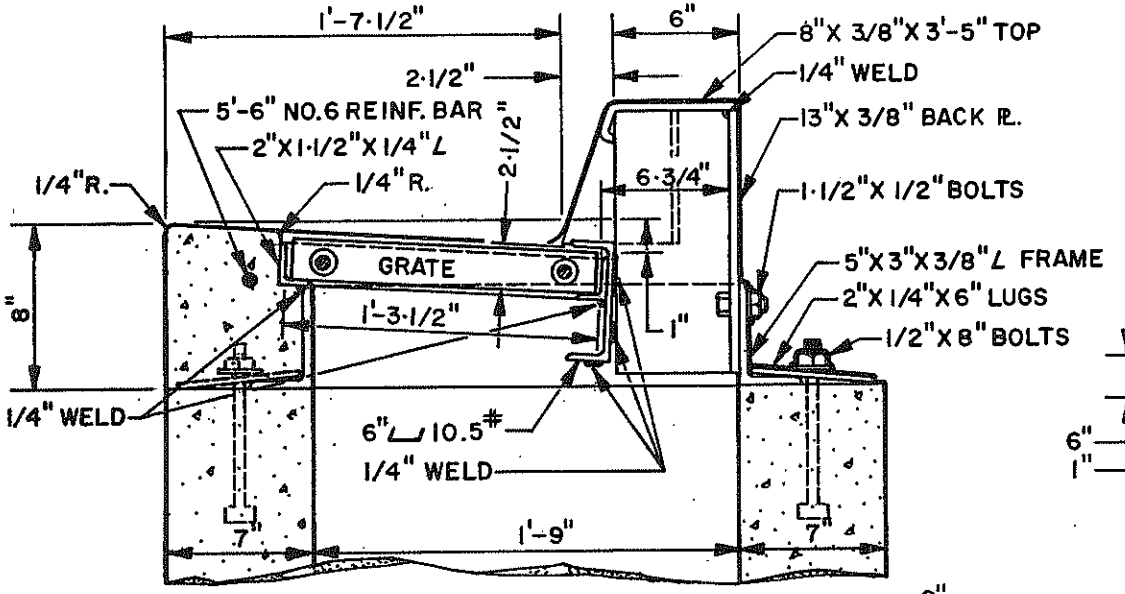

CROSS SECTION

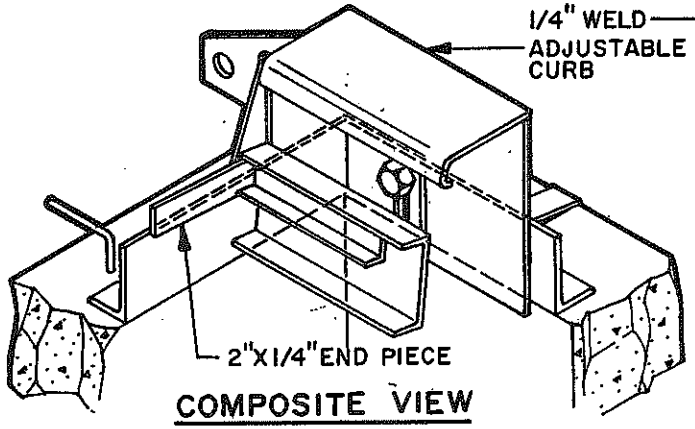

COMPOSITE VIEW

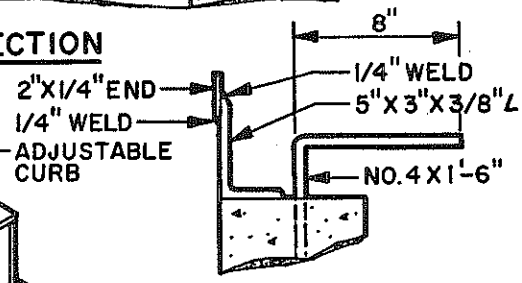

ANCHOR

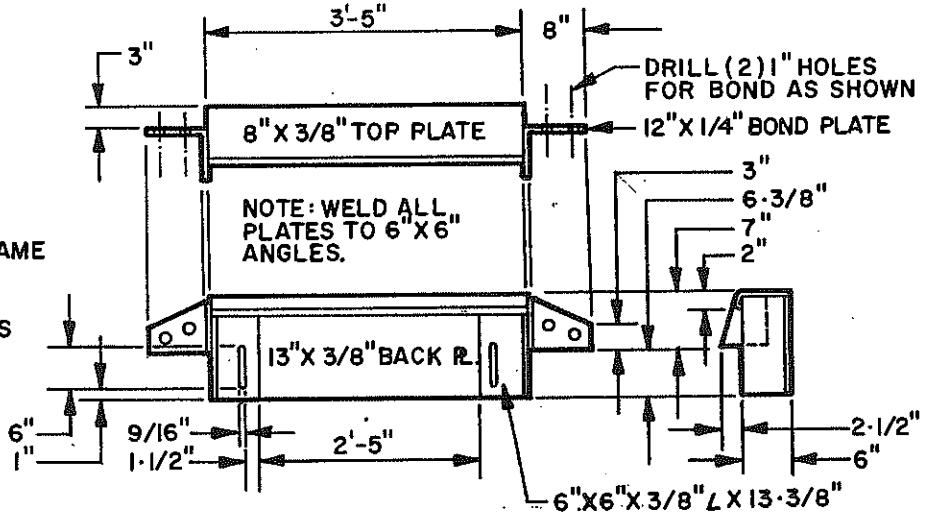

ADJUSTABLE CURB

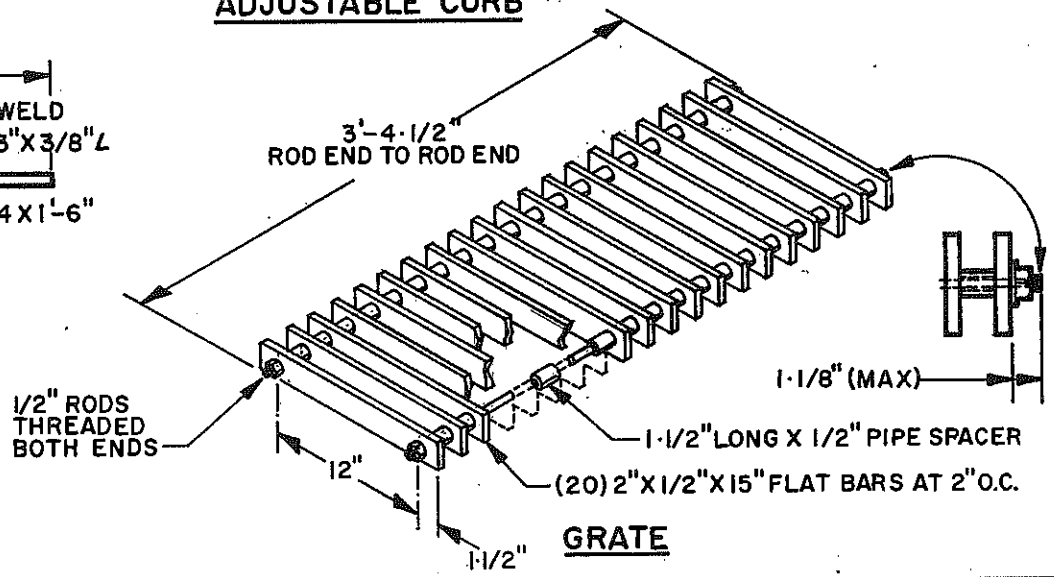

GRATE

DETAIL NO. 534-2	MARICOPA ASSOCIATION of GOVERNMENTS STANDARD DETAIL	CATCH BASIN-TYPE "E" (DETAILS)	DETAIL NO. 534-2

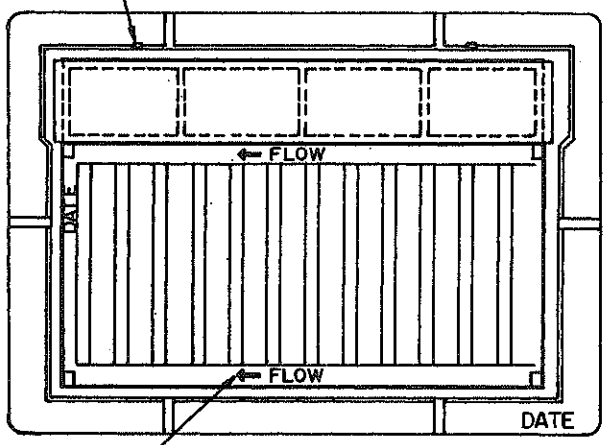

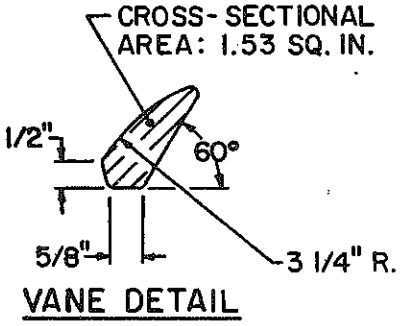

VANE DETAIL

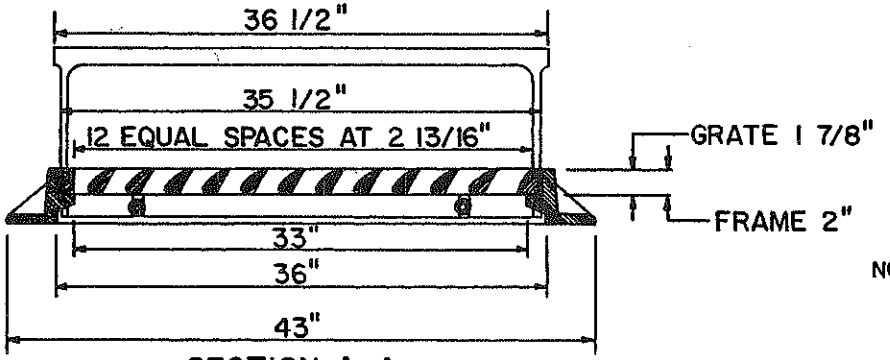

SECTION A-A

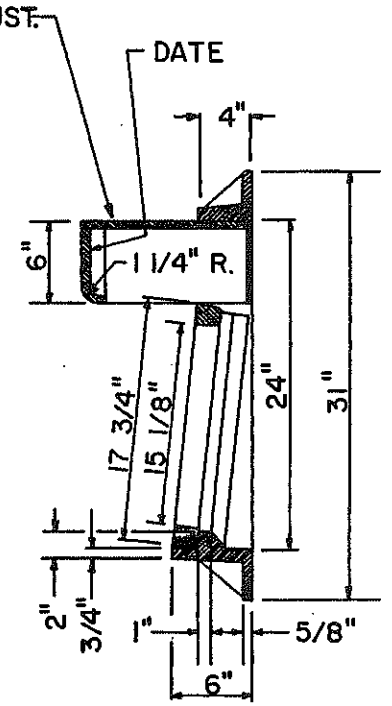

SECTION B-B

NOTE: DIMENSIONAL CHANGE REQUIRED FROM 3'-5" WIDTH TO 3'-0", AND 1'-9" DEPTH TO 2'-0".
MATERIAL CAST GRAY IRON ASTM A-48-83 CLASS 35B
FRAME WEIGHT 209 lbs.; GRATE 140 lbs.; CURB BOX 92 lbs.

CAST IRON FRAME - GRATE - CURB BOX

DETAIL NO. 534-3	MARICOPA ASSOCIATION of GOVERNMENTS STANDARD DETAIL	CATCH BASIN-TYPE "E" (DETAILS)		DETAIL NO. 534-3

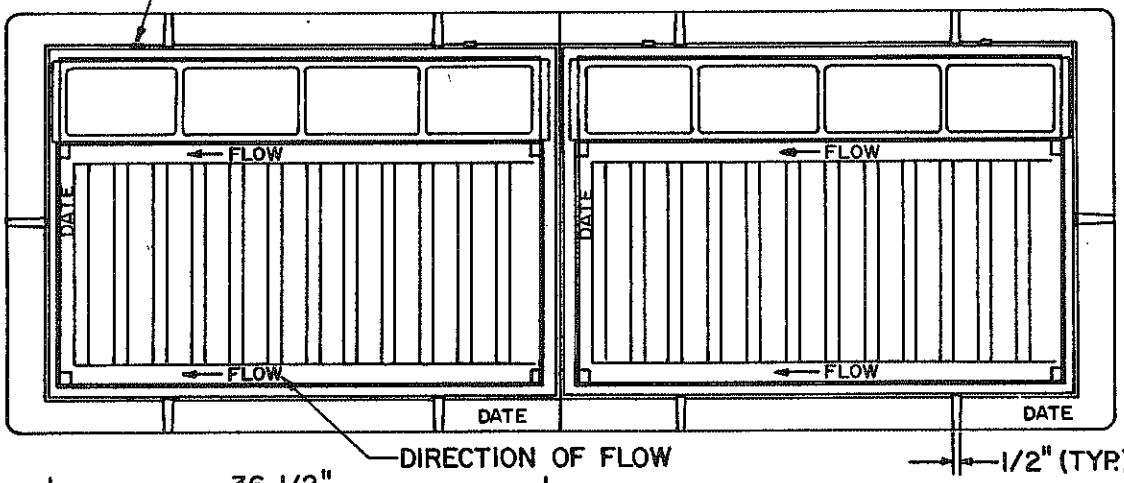

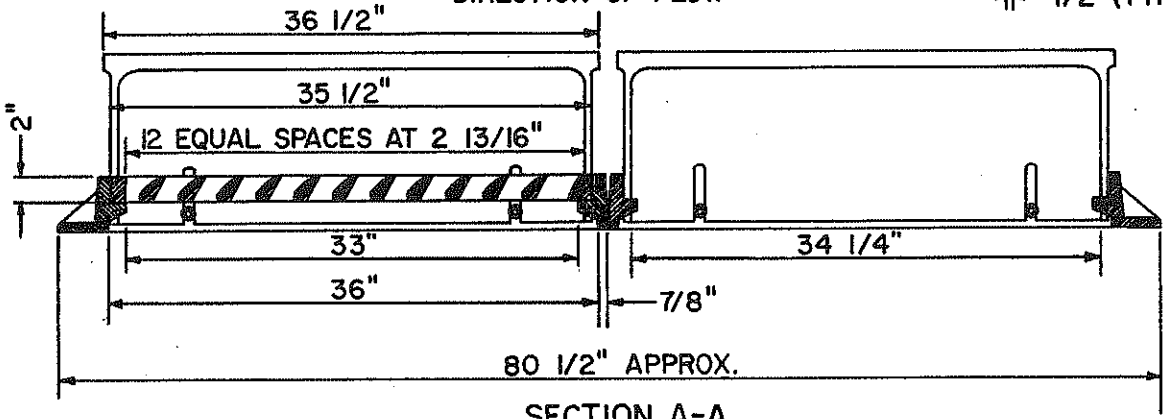

SECTION A-A

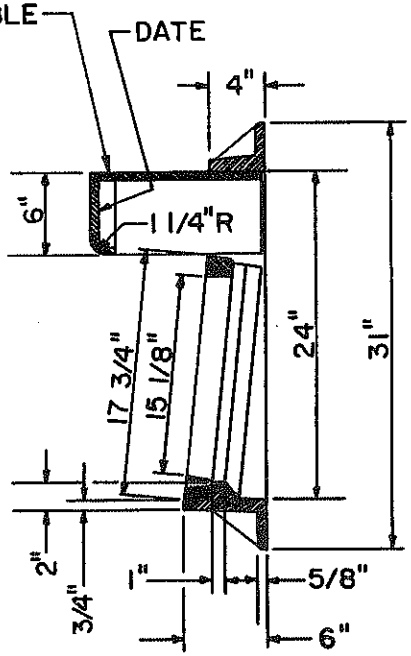

SECTION B-B

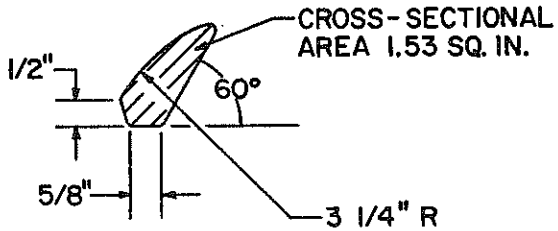

VANE DETAIL

DOUBLE UNIT CAST IRON FRAME - GRATE - CURB BOX

NOTE: DIMENSIONAL CHANGE REQUIRED FROM 3'-5" WIDTH TO 6'-2", AND 1'-9" DEPTH TO 2'-0". REQUIRES ONE CENTER STEEL I-BEAM 4"x 7.7 lbs. MATERIAL CAST GRAY IRON ASTM A-48-83 CLASS 35B. FRAME WEIGHT 197 lbs., GRATE 140 lbs., CURB BOX 92 lbs.

DETAIL NO. 534-4	MARICOPA ASSOCIATION of GOVERNMENTS STANDARD DETAIL	CATCH BASIN TYPE "E" (DETAILS)		DETAIL NO. 534-4

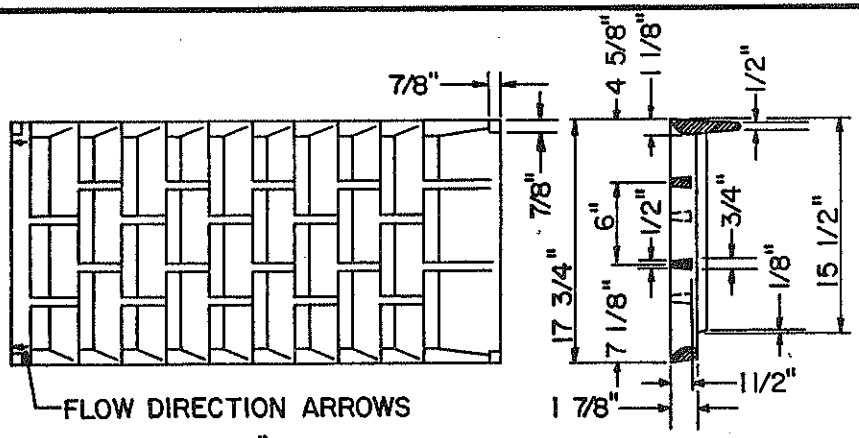

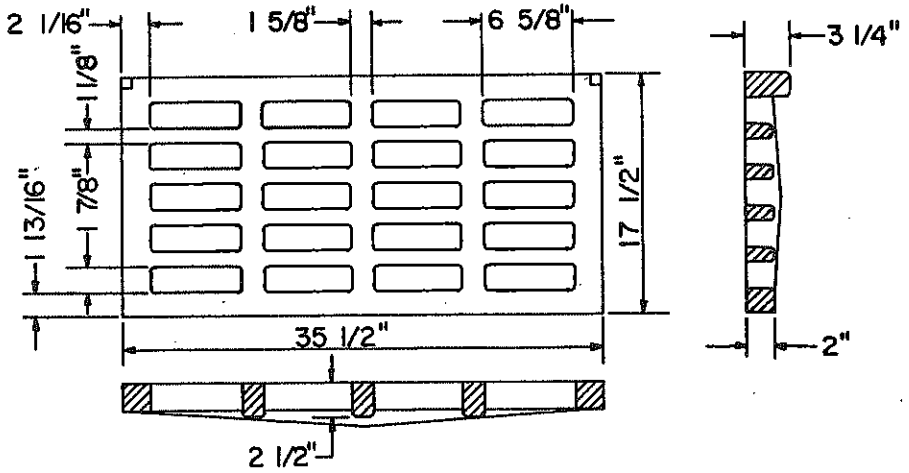

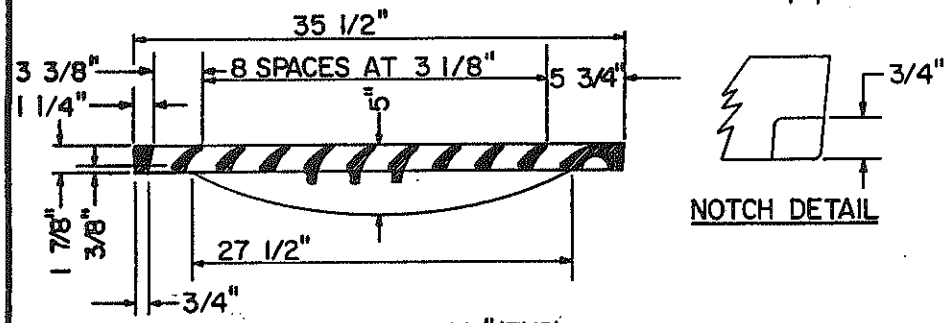

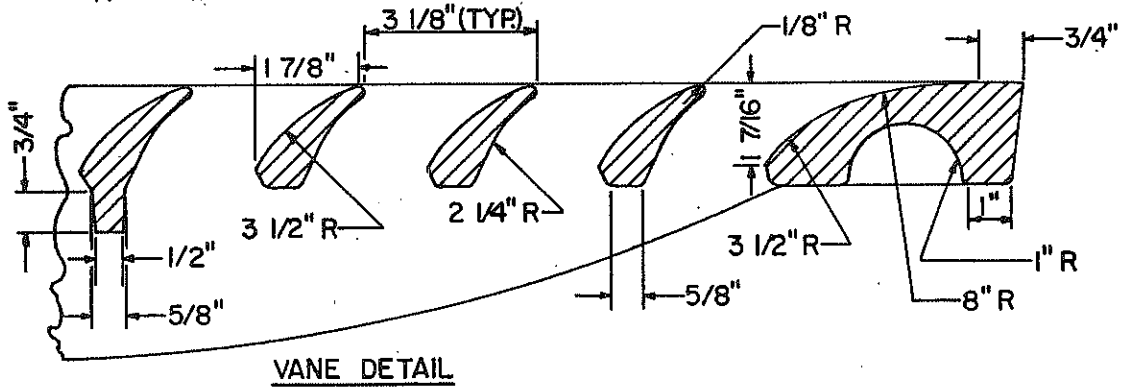

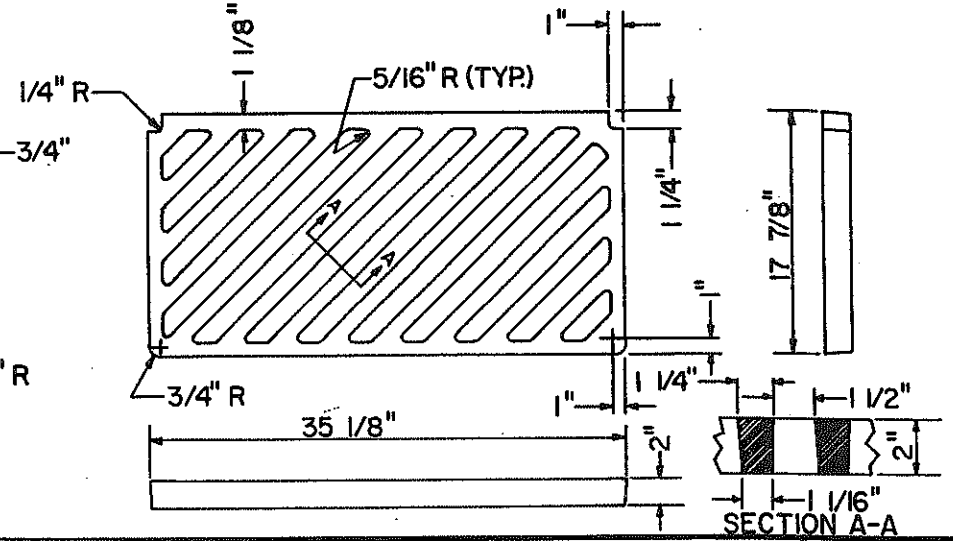

DETAIL NO. 534-5	MARICOPA ASSOCIATION of GOVERNMENTS STANDARD DETAIL	ALTERNATE GRATE STYLES - SUMP LOCATION	DETAIL NO. 534-5

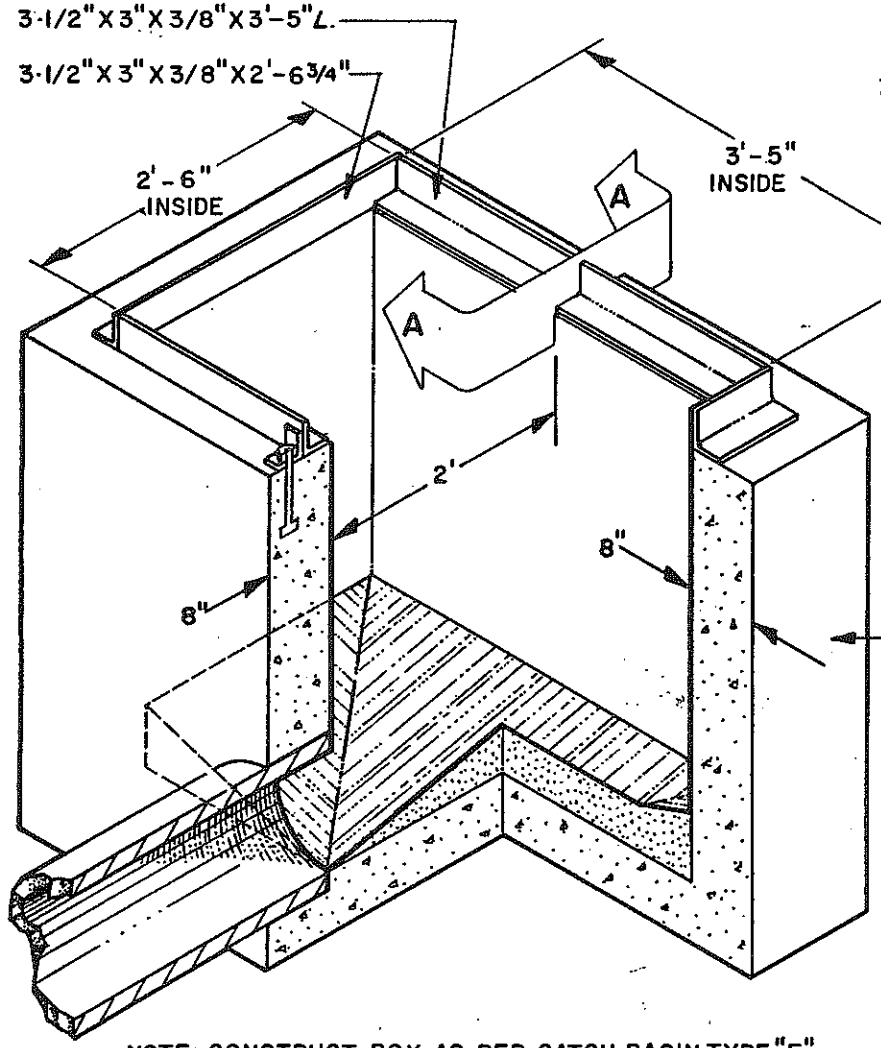

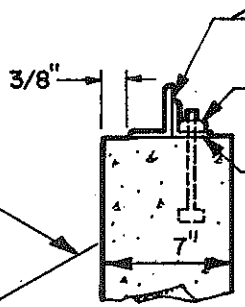

SECTION A-A

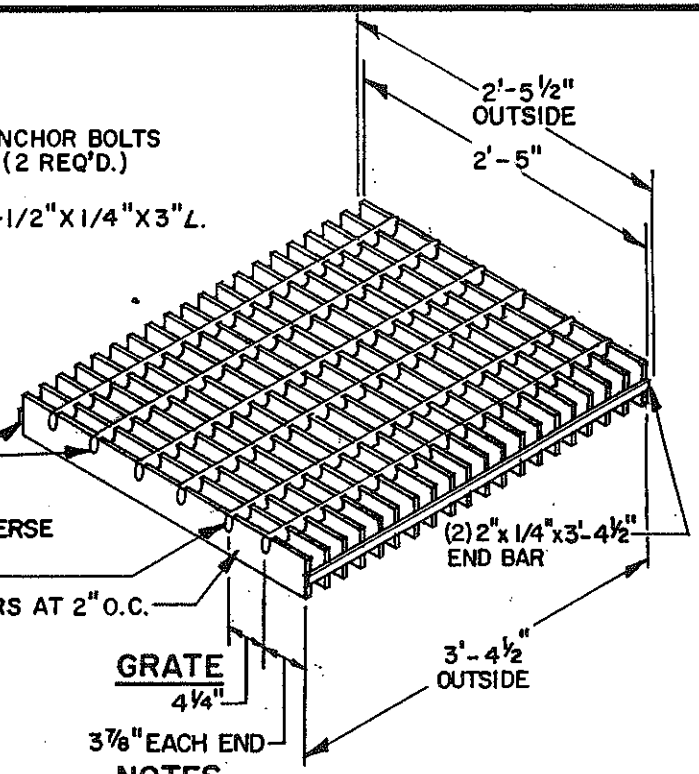

CLASS 'A' CONC. AS PER SECT. 725.

NOTE: CONSTRUCT BOX AS PER CATCH BASIN TYPE "E" (LOWER PORTION ONLY)

NOTES

1. PIPES MAY ENTER OR LEAVE ANY WALL. BOTTOM OF BOX TO BE SLOPED TO OUTLET PIPE FROM ALL DIRECTIONS AND TROWELLED TO A HARD SMOOTH SURFACE.
2. CONNECTION PIPES MAY BE PLACED IN ANY POSITION AROUND THE WALLS PROVIDED THE POSITION IS CONSISTENT WITH THE PLAN.
3. OUTLET PIPE SHALL BE TRIMMED TO FINAL SHAPE AND LENGTH BEFORE CONCRETE IS POURED
4. ALL STRUCTURAL STEEL TO BE PAINTED ONE SHOP COAT OF NO. 1 PAINT AND TWO FIELD COATS OF NO. 10 PAINT AS PER SECT. 790.
5. ALL WELDS ON FRAME AND SIDE BARS ON GRATE SHALL BE FULL LENGTH OF JOINT.

DETAIL NO.	MARICOPA ASSOCIATION of GOVERNMENTS STANDARD DETAIL	CATCH BASIN · TYPE "F" (FOR USE WITHOUT CURB)		DETAIL NO.
535				535

REVISED 1998

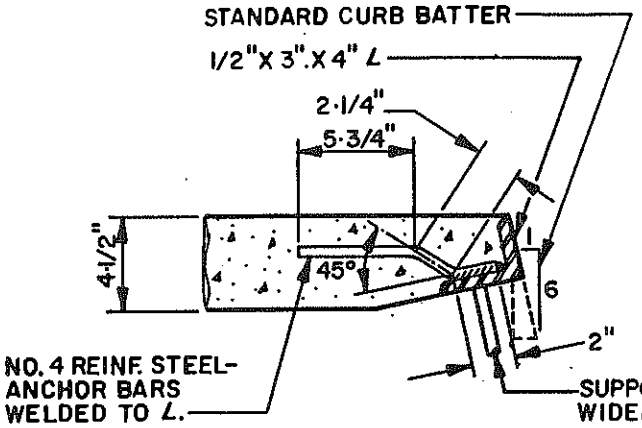

SECTION C-C

AS PER STD. DETAIL 531, 532 & 533.

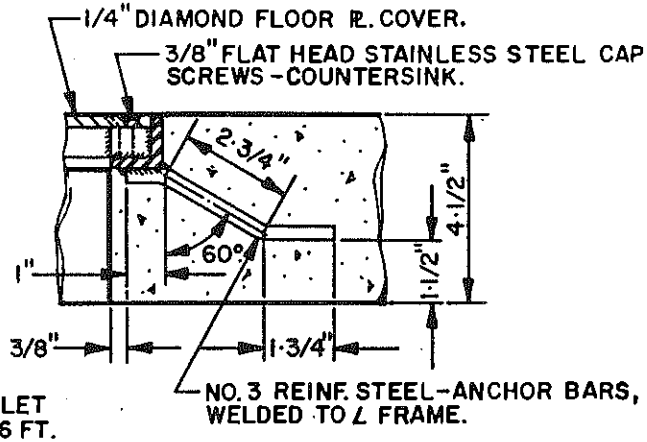

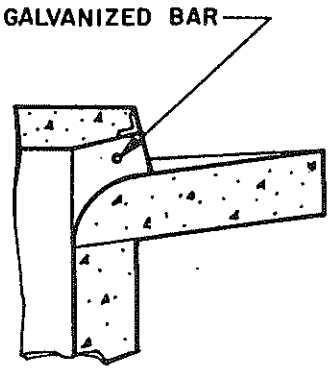

PROTECTION BAR

NOTE HORIZONTAL PLAIN ROUND GALVANIZED STEEL PROTECTION BAR SHALL BE USED WHEN CURB FACE IS 9 INCHES OR MORE.
THE BAR SHALL BE EMBEDDED 5 INCHES AT EACH END.

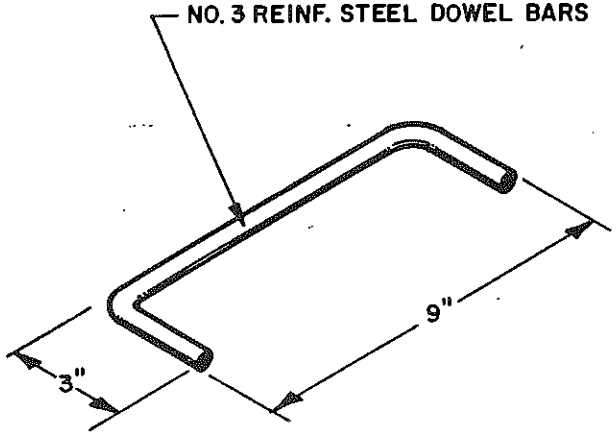

DOWEL BAR

SECTION D-D

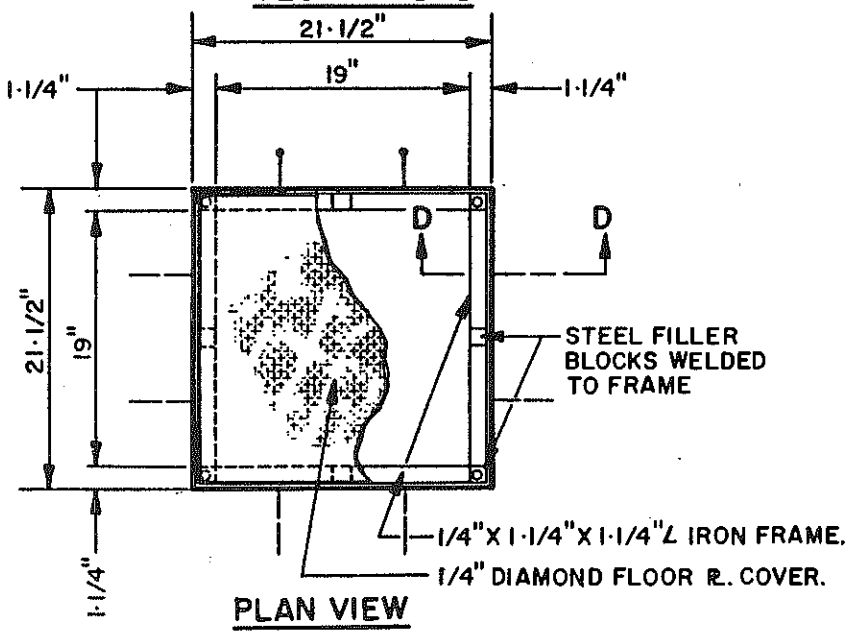

PLAN VIEW

DETAIL NO. 536	MARICOPA ASSOCIATION of GOVERNMENTS STANDARD DETAIL	COMMON DETAILS & SECTIONS FOR CURB OPENING CATCH BASINS		DETAIL NO. 536

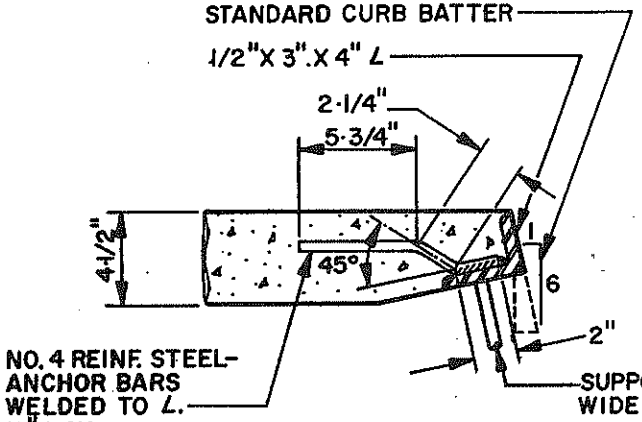

SECTION C-C

AS PER STD. DETAIL 531, 532 & 533.

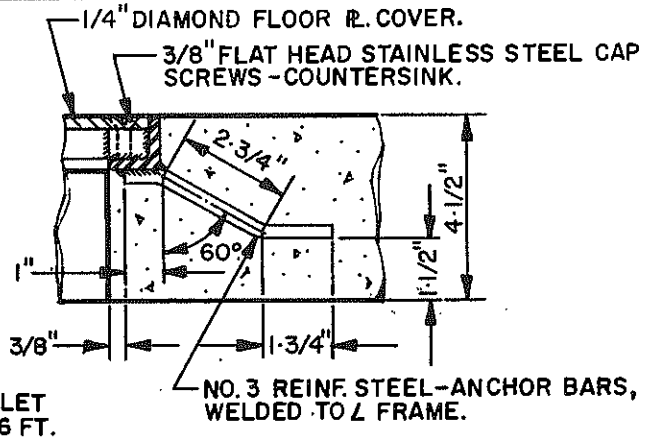

SECTION D-D

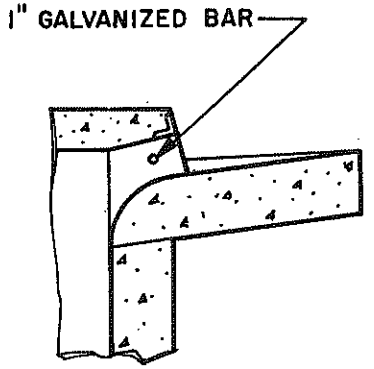

PROTECTION BAR

NOTE HORIZONTAL PLAIN ROUND GALVANIZED STEEL PROTECTION BAR SHALL BE USED WHEN CURB FACE IS 9 INCHES OR MORE.

THE BAR SHALL BE EMBEDDED 5 INCHES AT EACH END.

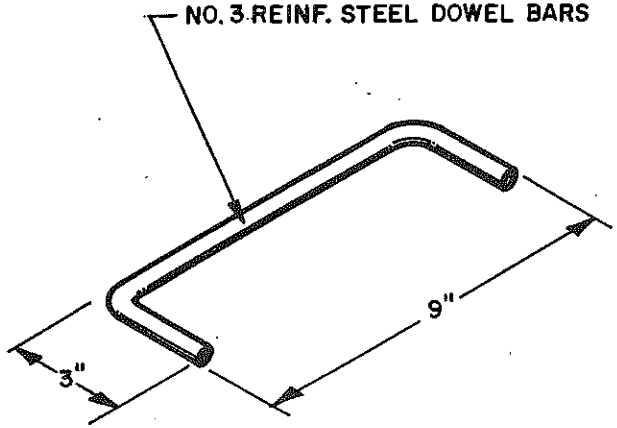

DOWEL BAR

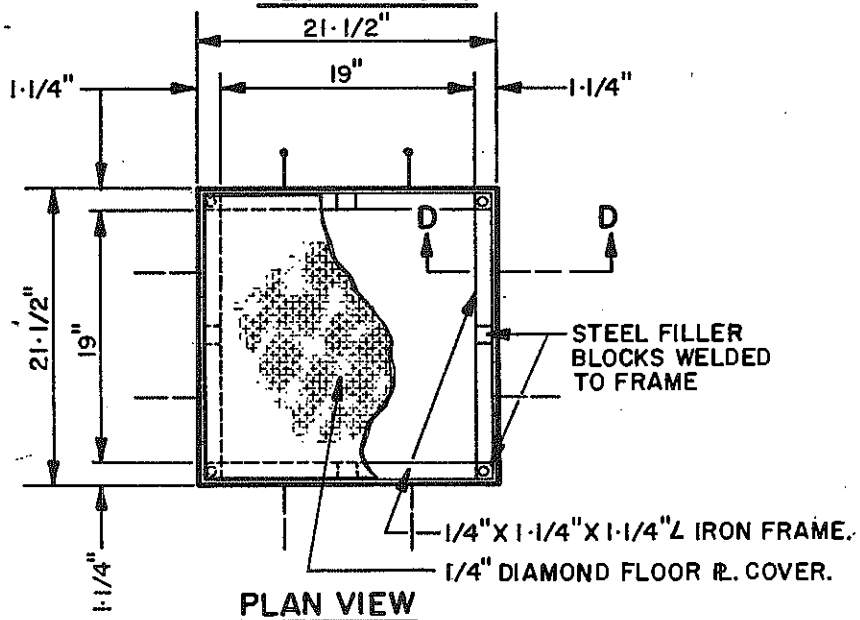

PLAN VIEW

DETAIL NO. 536-1	MARICOPA ASSOCIATION of GOVERNMENTS STANDARD DETAIL	COMMON DETAILS & SECTIONS FOR CURB OPENING CATCH BASINS	DETAIL NO. 536-1

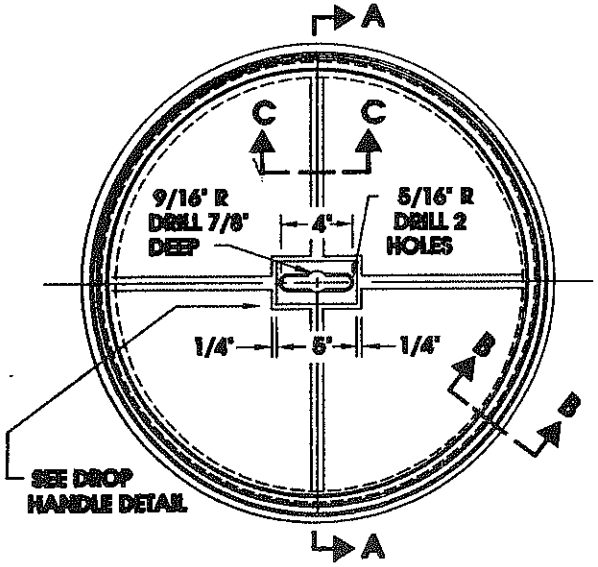

PLAN VIEW

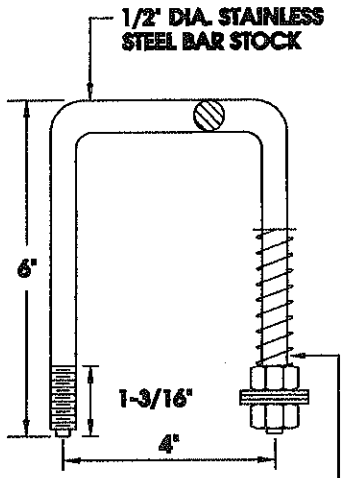

DROP HANDLE

FURNISH FOR EACH SIDE OF HANDLE:

1 EA. 304-S.STL. SPRING
2-1/2 X 17/32 I.D. X 3/32
2 EA. 1/2" HEX NUT
3 EA. 1/2" FLAT WASHER
1 EA. 1/2" LOCK WASHER

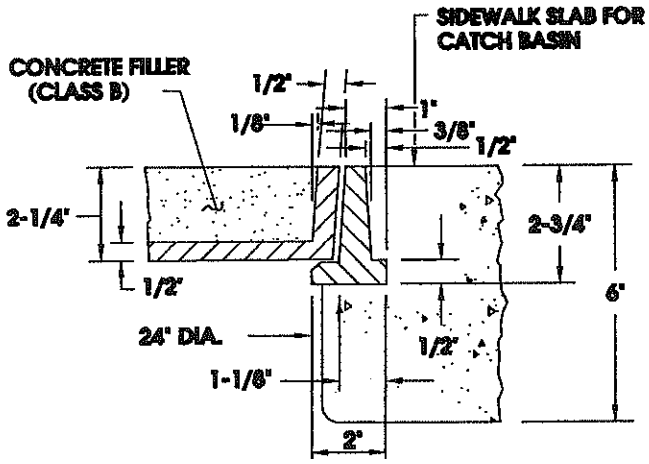

SECTION B-B

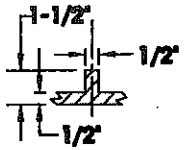

SECTION C-C

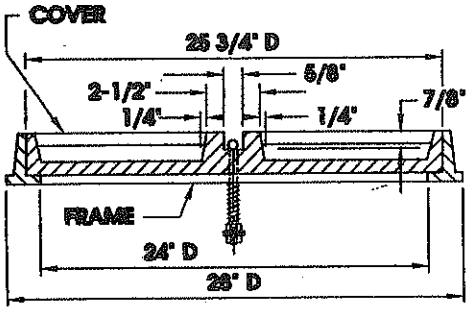

SECTION A-A

NOTES

1. FRAME SHALL BE NON-LOCKING.
2. FRAME AND COVER SHALL BE CAST IRON OR ASTM A-36 STRL. HORIZONTAL SURFACE OF COVER IN CONTACT WITH FRAME SHALL BE MACHINED, ASA B-46 ROUGHNESS SHALL NOT EXCEED 1/32 INCH.
3. COVER SHALL BE FILLED WITH CONCRETE AND BROOM FINISHED.
4. SMALL VARIATIONS IN DIMENSIONS OF FEATURES OF A MINOR NATURE THAT ARE PART OF THE FOUNDRY'S CASTING ARE PERMISSIBLE.

DETAIL NO. 536-2	MARICOPA ASSOCIATION of GOVERNMENTS STANDARD DETAIL	CATCH BASIN ACCESS FRAME AND COVER	DETAIL NO. 536-2

ALL CONCRETE SHALL BE CLASS "A". PER SECT. 725 EXPOSED EDGES SHALL BE FINISHED WITH A 1/2" RADIUS.

DOUBLE GRATE

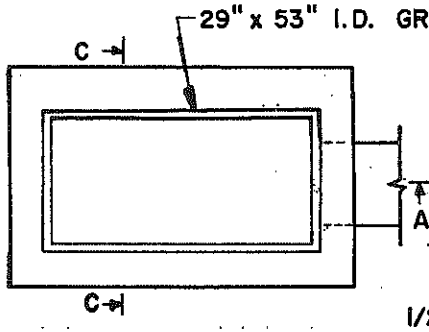

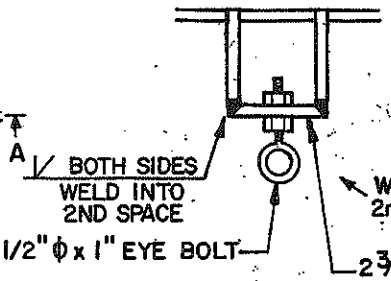

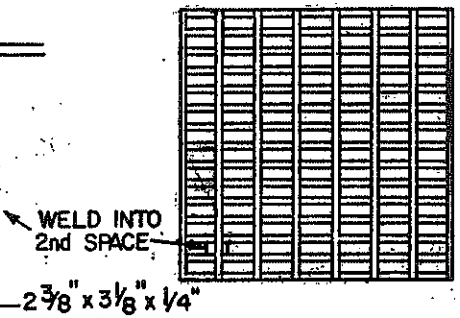

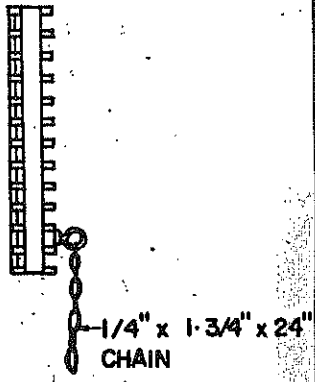

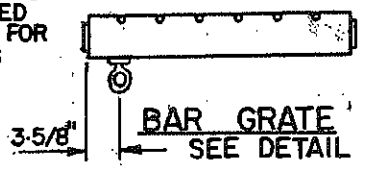

BAR GRATE
SEE DETAIL 539

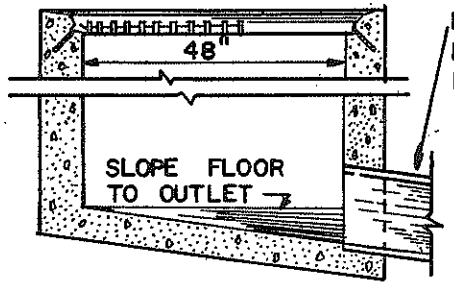

SECTION A-A

29" x 29" I.D. GRATE FRAME

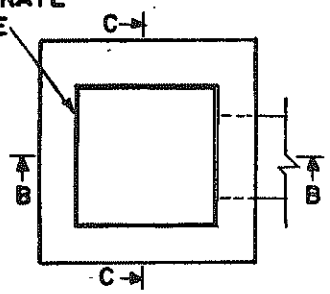

SINGLE GRATE

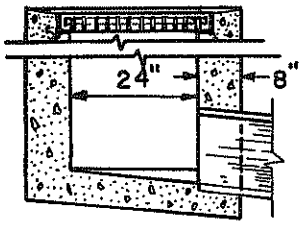

SECTION B-B

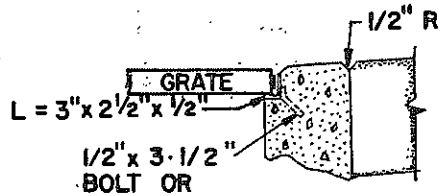

DETAIL OF ANGLE FRAME GRATE SUPPORT

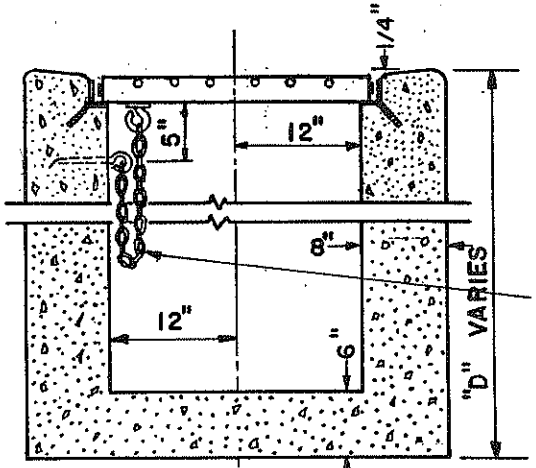

SECTION C-C

DETAIL NO.			DETAIL NO.
537	MARICOPA ASSOCIATION of GOVERNMENTS STANDARD DETAIL	CATCH BASIN - TYPE G	537

REVISED 1998

CUT HOLE IN PIPE 24" LONG FOR SINGLE GRATE STRUCTURES AND 48" LONG FOR DOUBLE GRATE. WIDTH DEPENDS ON DIA. OF PIPE, NOT TO EXCEED 22" MIN. WIDTH TO BE SET BY PROJECT ENGINEER.

WHEN DOUBLE GRATE IS USED INCREASE THE LENGTH OF THE STRUCTURE ACCORDINGLY.

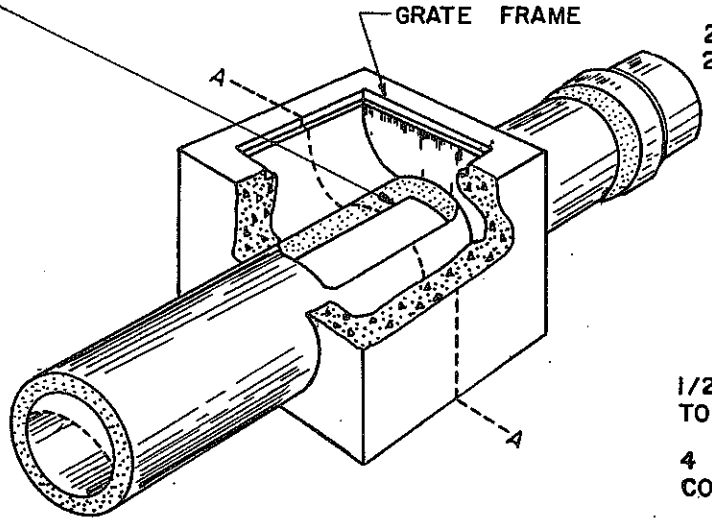

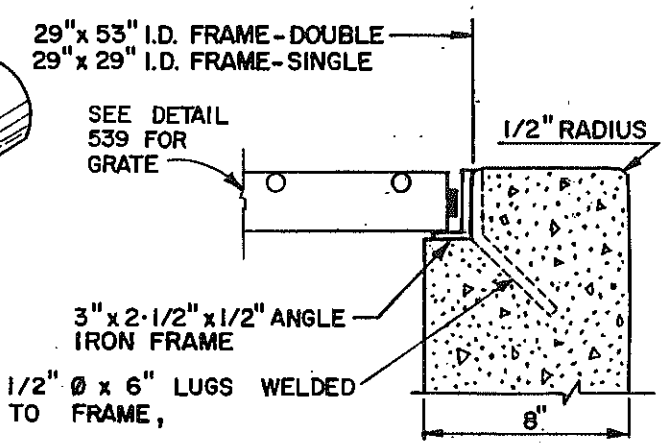

DETAIL OF ANGLE FRAME GRATE SUPPORT

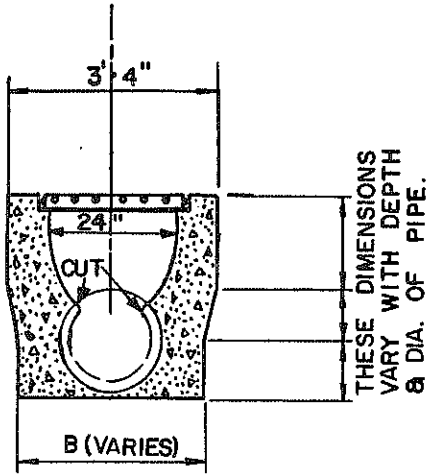

SECTION A-A

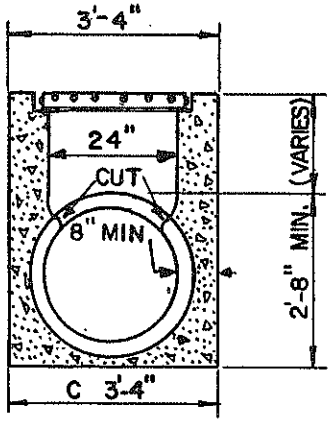

SECTION A-A
24" PIPE

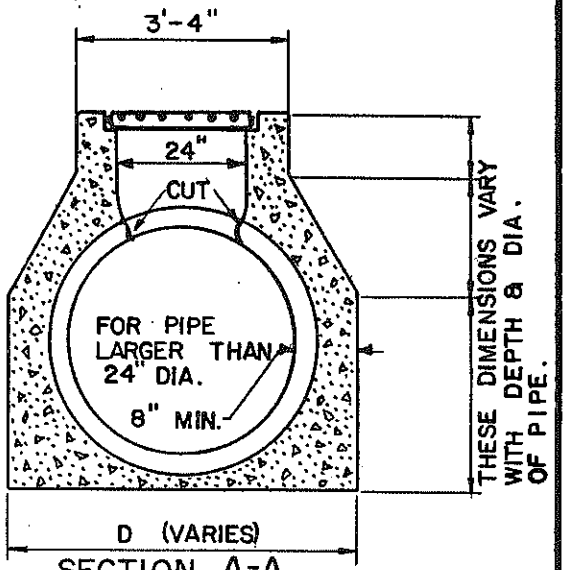

SECTION A-A

DETAIL NO. 538	MARICOPA ASSOCIATION of GOVERNMENTS STANDARD DETAIL	CATCH BASIN - TYPE H		DETAIL NO. 538

REVISED 1998

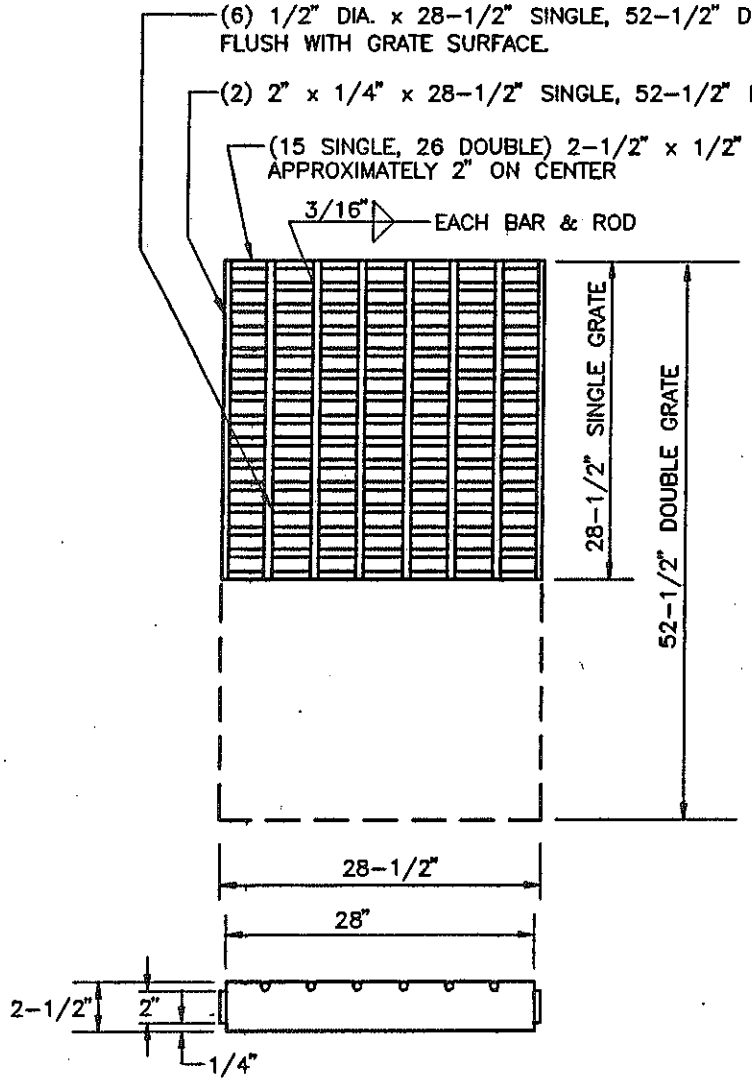

NOTES:

1. ALL STEEL SHALL BE IN ACCORDANCE WITH A.S.T.M. A-36.
2. WELDING SHALL BE IN ACCORDANCE WITH A.W.S. SPECIFICATIONS.
3. FRAME AND GRATE SHALL BE TESTED FOR ACCURACY OF FIT AND SHALL BE MARKED IN SETS BEFORE DELIVERY.
4. THE COMPLETED ASSEMBLY SHALL BE GIVEN ONE SHOP COAT OF NO. 1 PAINT AND TWO FIELD COATS OF NO. 10 PAINT AS PER SECTION 790.
5. THE GRATE SHALL BE FABRICATED TO WITHIN 1/8" SPECIFIED DIMENSIONS.

DETAIL NO. 539	MARICOPA ASSOCIATION of GOVERNMENTS STANDARD DETAIL	GRATES FOR CATCH BASINS, TYPE G AND H		DETAIL NO. 539

REVISED 1998

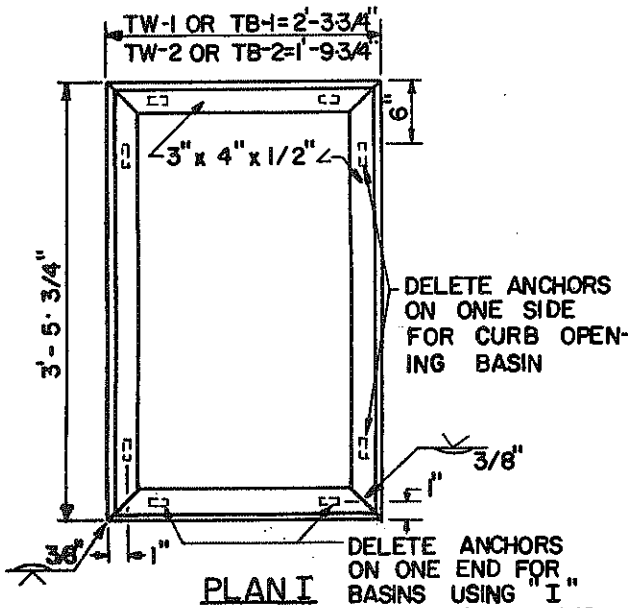

PLAN I

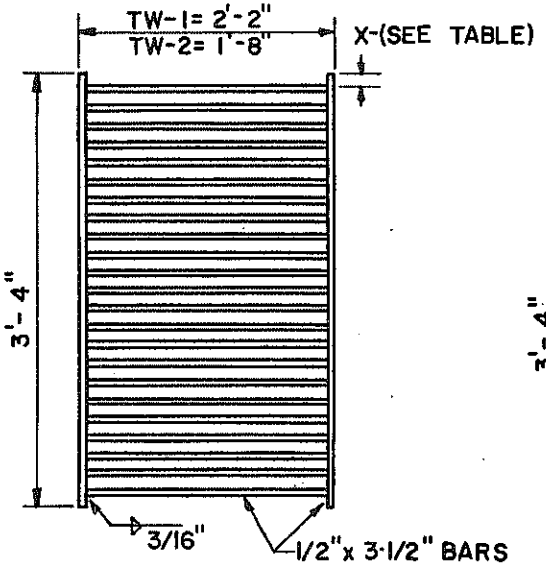

PLAN IA

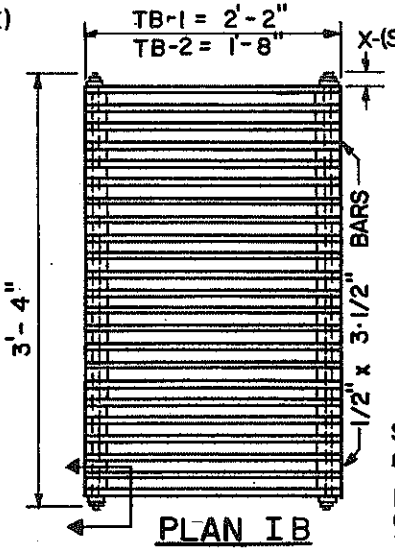

PLAN IB

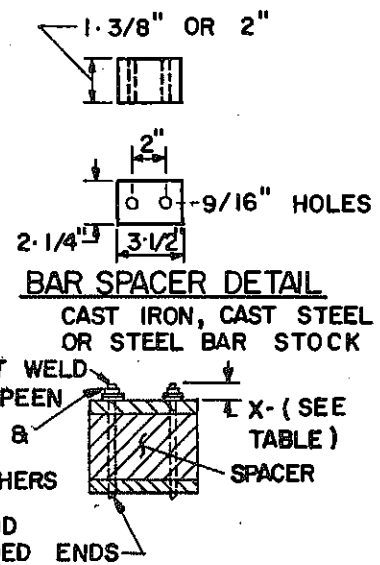

TW INDICATES TRANSVERSE WELDED
TB INDICATES TRANSVERSE BOLTED

GRATE TYPES TB-1 & TB-2

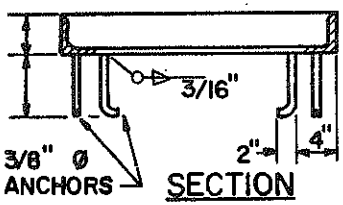

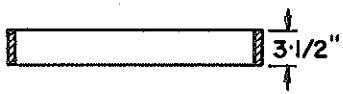

GRATE TYPES TW-1 & TW-2

TYPE	CLEAR SPACING	NO. BARS	X	GRATE OPENING SQ. FT.
TW OR TB-1.0	1"	26	1"	3.21
TW OR TB-1.1	1 3/8"	21	1"	3.32
TW OR TB 1.2	2"	16	1"	4.66
TW OR TB 2.0	1"	26	1"	2.32
TW OR TB 2.1	1 3/8"	21	1"	2.41
TW OR TB 2.2	2"	16	1"	2.65

FOR BARS SPACING, NUMBER OF BARS AND GRATE OPENING, SEE TABLE.

NOTES:

1. GRATING UNITS AND FRAMES SHALL BE FABRICATED FROM STRUCTURAL STEEL EXCEPT AS NOTED.
2. WELDING SHALL BE IN ACCORDANCE WITH STD. WELDING SPEC.
3. THE COMPLETED ASSEMBLY SHALL BE GIVEN TWO SHOP COATS OF NO.1 PAINT AS PER SECT. 790.
4. FRAME AND GRATE SHALL FIT TO A MAX. ROCK OF 0.093" AT ANY POINT.
5. RESTRICT USE TO GRADES OF 3% OR LESS.

DETAIL NO. 540-1	MARICOPA ASSOCIATION of GOVERNMENTS STANDARD DETAIL	CATCH BASIN - GRATES		DETAIL NO. 540-1

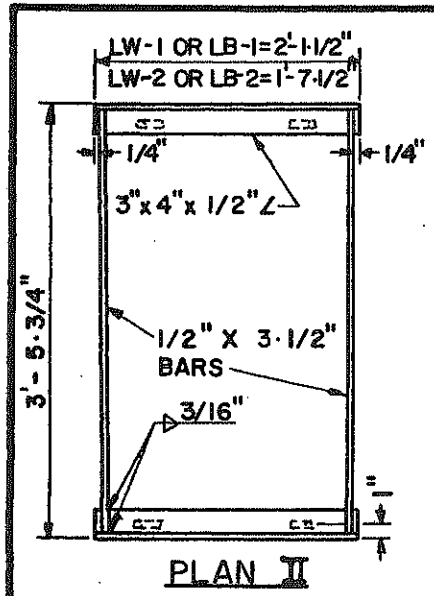

PLAN II

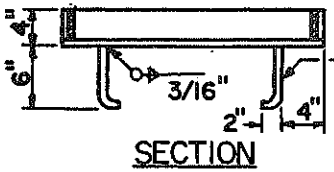

SECTION

-3/8" ANCHORS DELETE ON END WHEN USED WITH I BEAM SUPPORT

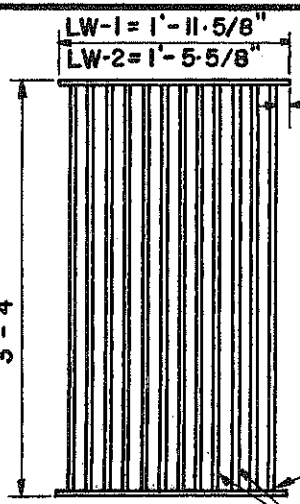

PLAN II A

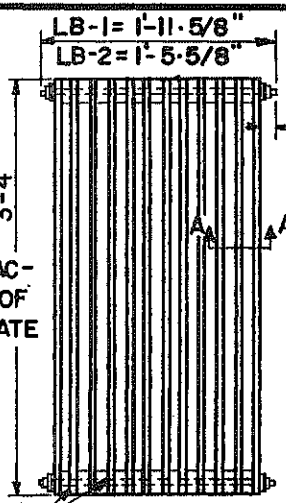

PLAN II B

FOR BAR SPACING, NUMBER OF BARS AND GRATE OPENING, SEE TABLE.

SECTION

GRATE TYPE LW & EF RESTRICTED TO SLOPES OF 3% OR LESS

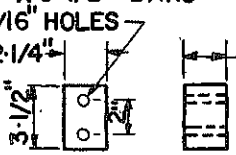

BAR SPACER DETAIL

CAST IRON, CAST STEEL OR STEEL BAR STOCK

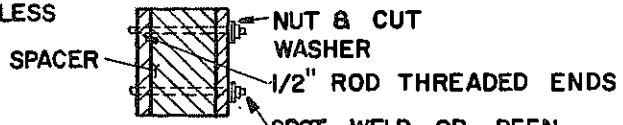

SECTION A-A

GRATES TYPES LB USE ON LONGITUDINAL GRADES IN EXCESS OF 3% OR AS AN ALTERNATE TO TYPES LW OR EF ON GRADES OF 3% OR LESS.

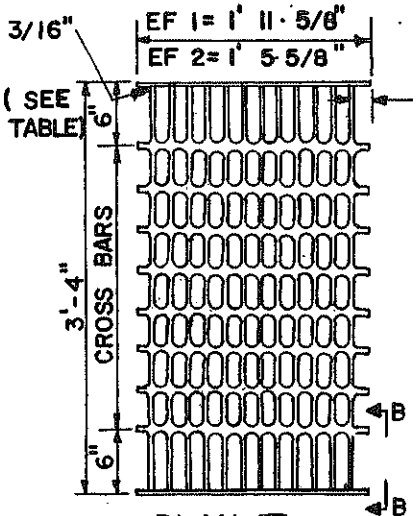

PLAN II

CROSS BARS: 3/8" Ø, 4" C TO C. BEARING BARS: 3-1/2" x 1/4", 1-7/8" C TO C. END BARS: 2-1/2" x 1/4" CROSS BARS MAY BE FILLET WELDED, RESISTANCE WELDED OR ELECTROFORGED TO BEARING BARS.

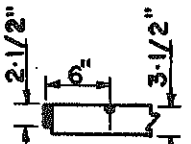

SECT. B-B

GRATE TYPE	CLEAR BAR SPACING	NO. BARS	X	GRATE OPENING SQ. FT.
LW OR LB-1.0	1"	16	5/16"	3.97
" " -1.1	1-3/8"	13	5/16"	4.34
" " -1.2	2"	9	1-9/16"	4.84
EF-1	1-5/8"	13	7/16"	4.66
LW OR LB-2.0	1"	12	5/16"	2.98
" " -2.1	1-3/8"	9	1-1/16"	3.35
" " -2.2	2"	7	1-1/16"	3.60
EF-2	1-5/16"	10	1/4"	3.48

NOTES:

1. LW INDICATES LONGITUDINAL WELDED.
2. LB INDICATES LONGITUDINAL BOLTED.
3. EF INDICATES ELECTROFORGED.
4. GRATING UNITS AND FRAMES SHALL BE FABRICATED FROM STRUCTURAL STEEL "A-36" EXCEPT AS NOTED.
5. ALL WELDING SHALL BE IN ACCORDANCE WITH STANDARD WELDING SPECIFICATIONS.
6. THE COMPLETED ASSEMBLY SHALL BE GIVEN ONE SHOP COAT OF NO. 1 PAINT.
7. FRAMES AND GRATES SHALL FIT TO A MAXIMUM ROCK OF 0.093 AT ANY POINT.

DETAIL NO. 540-2	MARICOPA ASSOCIATION of GOVERNMENTS STANDARD DETAIL	CATCH BASIN - GRATES		DETAIL NO. 540-2

PIPE DIA.	APPROX. WEIGHT	DIMENSIONS-INCHES						APPROX. SLOPE
		T	A	B	C	E	F	
24"	1520 lbs.	3	9-1/2	43-1/2	30	73-1/2	48	3
27"	1930 lbs.	3-1/4	10-1/2	49-1/2	24	73-1/2	54	3
30"	2190 lbs.	3-1/2	12	54	19-3/4	73-3/4	60	3
36"	4100 lbs.	4	15	63	34-3/4	97-3/4	72	3
42"	5380 lbs.	4-1/2	21	63	35	98	78	3
48"	6550 lbs.	5	24	72	26	98	84	3
54"	8240 lbs.	5-1/2	27	65	33-1/4	98-1/4	90	2-1/2

NOTES

1. DESIGN OF END SECTION SHALL CONFORM TO STANDARDS FOR REINFORCED CONC. PIPE.
2. END SECTION JOINT CONFORMATION SHALL MATCH THE PIPE JOINTS.
3. EMBANKMENT SLOPE SHALL BE WARPED TO MATCH SLOPE OF END SECTION.
4. CULVERT LENGTH IS AS SHOWN ON PLANS.

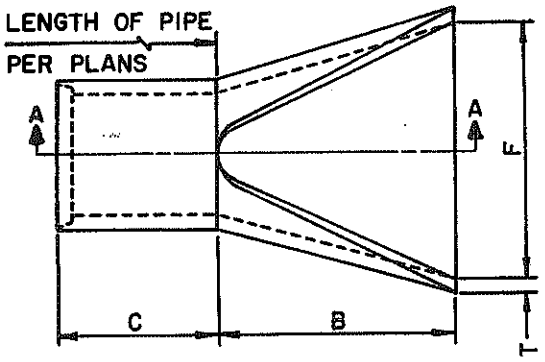

PLAN

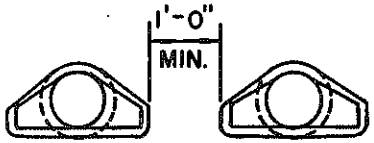

SPACING FOR MULTIPLE INSTALLATION

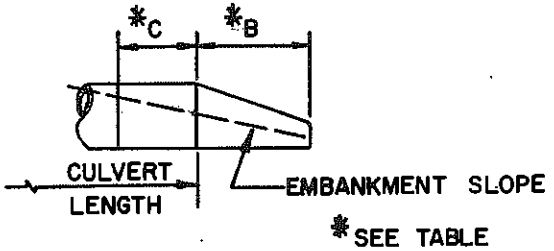

RIGHT ANGLE CULVERT

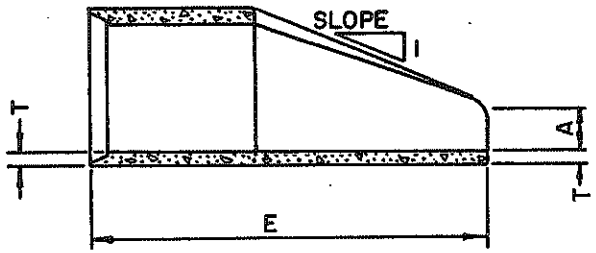

SECTION A-A

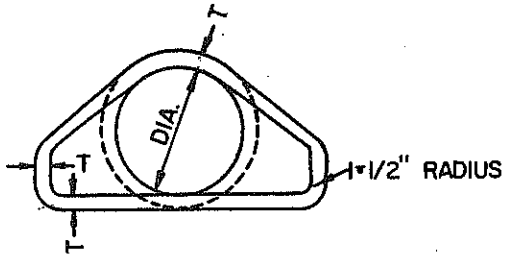

FRONT ELEVATION

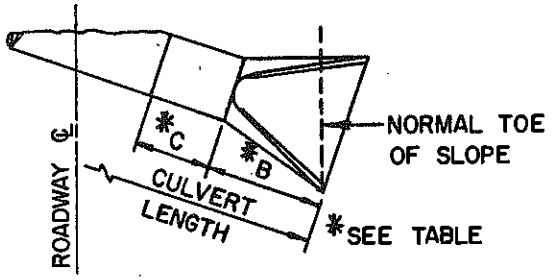

SKEWED CULVERT

DETAIL NO. 545	MARICOPA ASSOCIATION of GOVERNMENTS STANDARD DETAIL	END SECTION - REINFORCED CONCRETE PIPE		DETAIL NO. 545

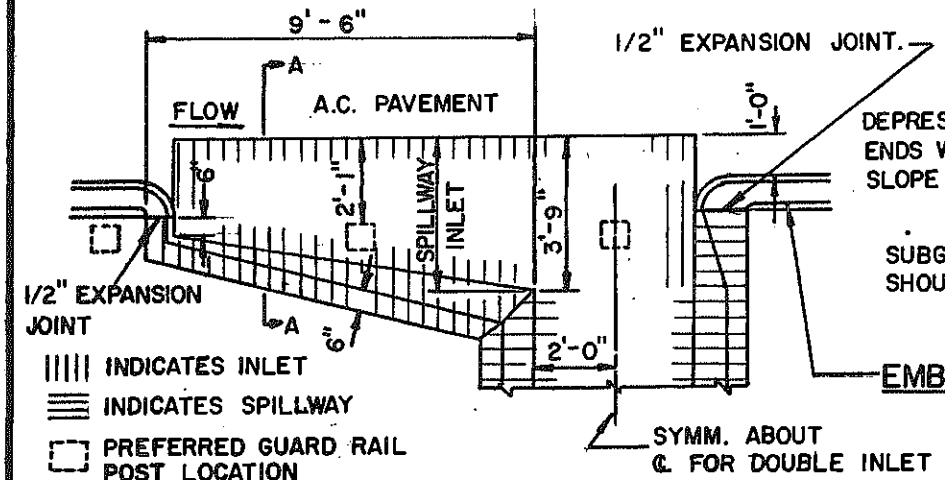

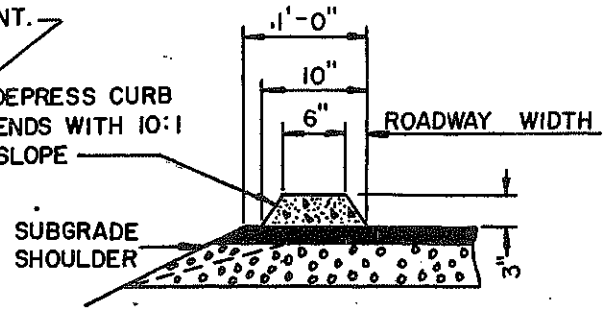

EMBANKMENT CURB / EXTRUDED
(OPTIONAL)

NOTES

1. WHERE ROCK IS ENCOUNTERED THE OUTLET MAY BE OMITTED.
2. ALL PORTIONS OF SPILLWAY TO BE TROWEL FINISHED.

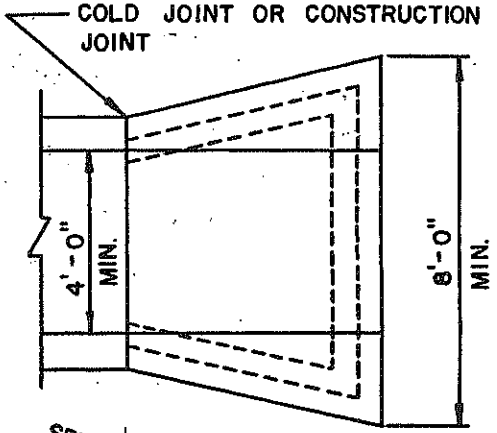

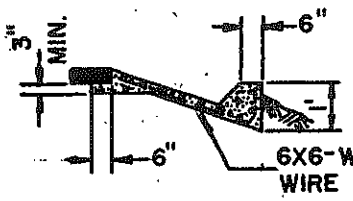

SINGLE INLET

SECTION A-A

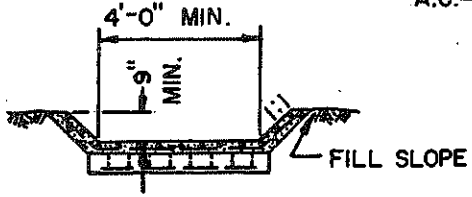

SPILLWAY SECTION

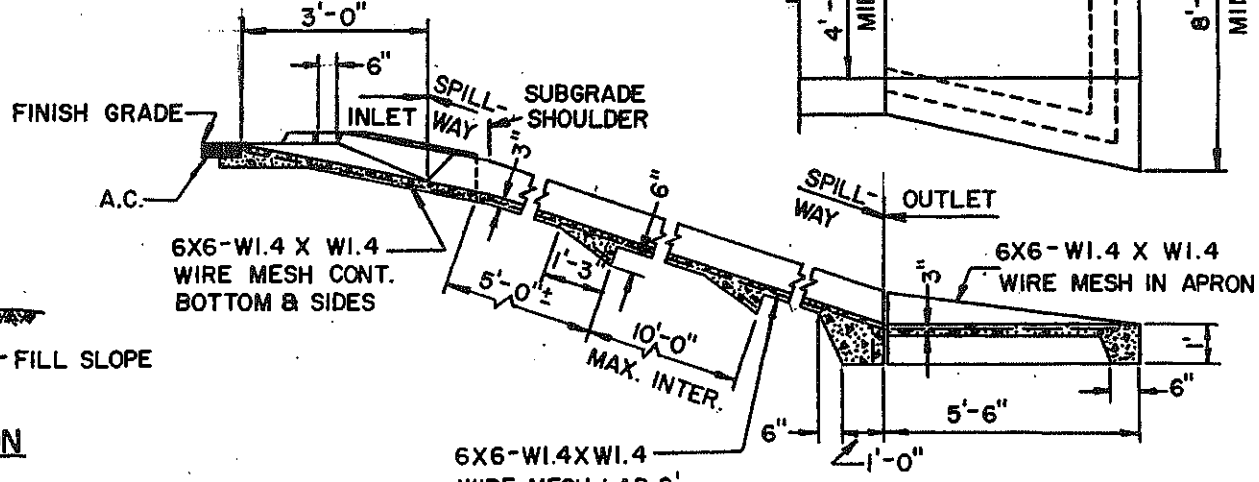

SECTION ON SPILLWAY ℄
DOUBLE INLET

NOTES

3. CONCRETE FOR THE SPILLWAY INLET, SPILLWAY AND OUTLET SHALL BE CLASS B PER SECT. 725.
4. WHEN THE OUTLET IS USED, THE WIRE MESH SHALL EXTEND THROUGH THE JOINT INTO THE OUTLET IN LIEU OF BENDING INTO THE KEY.

DETAIL NO. 550	MARICOPA ASSOCIATION of GOVERNMENTS STANDARD DETAIL	SPILLWAY INLET AND OUTLET		DETAIL NO. 550

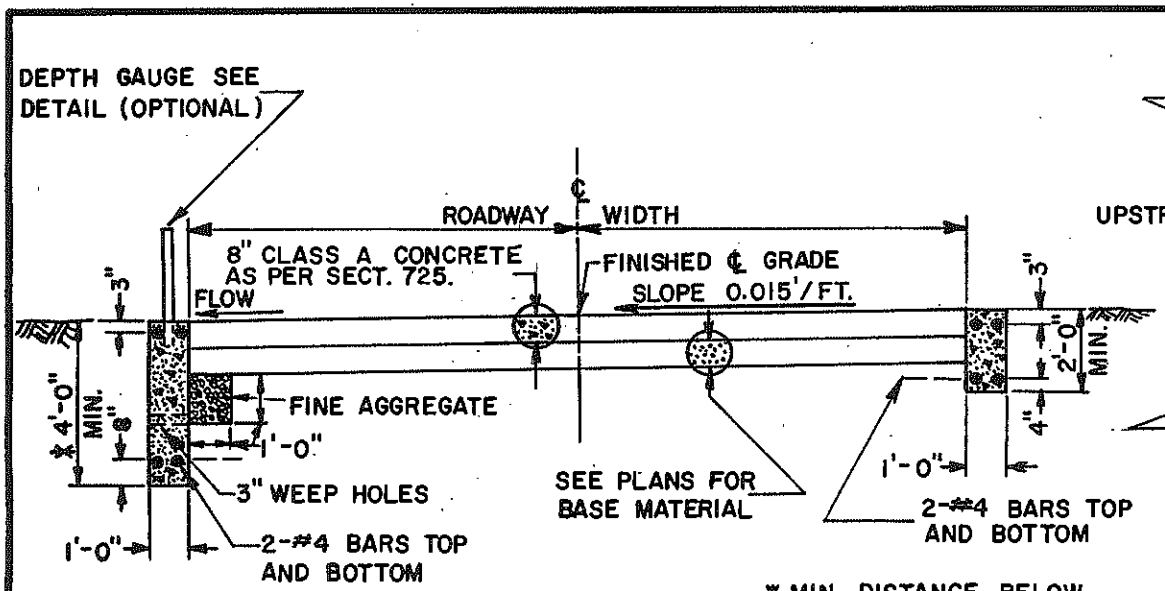

CONCRETE SURFACE FORD
CONCRETE WALLS

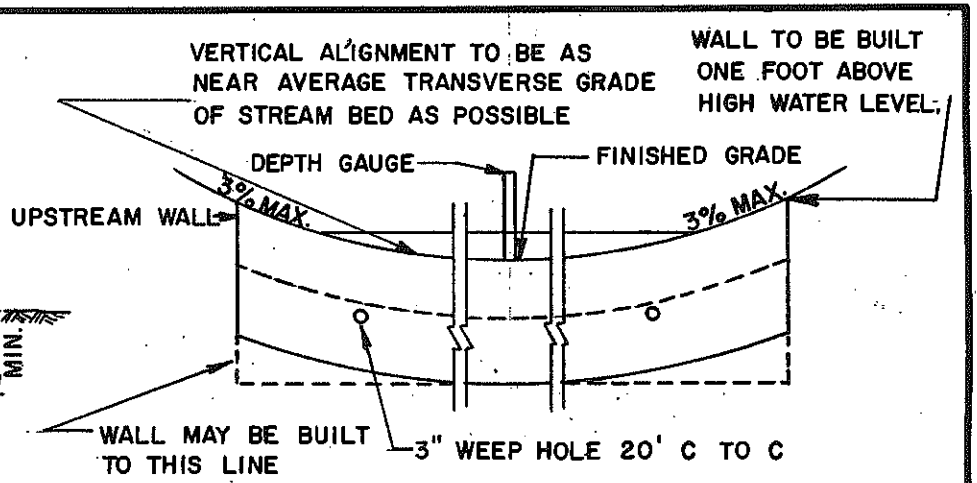

ELEVATION LOOKING UPSTREAM

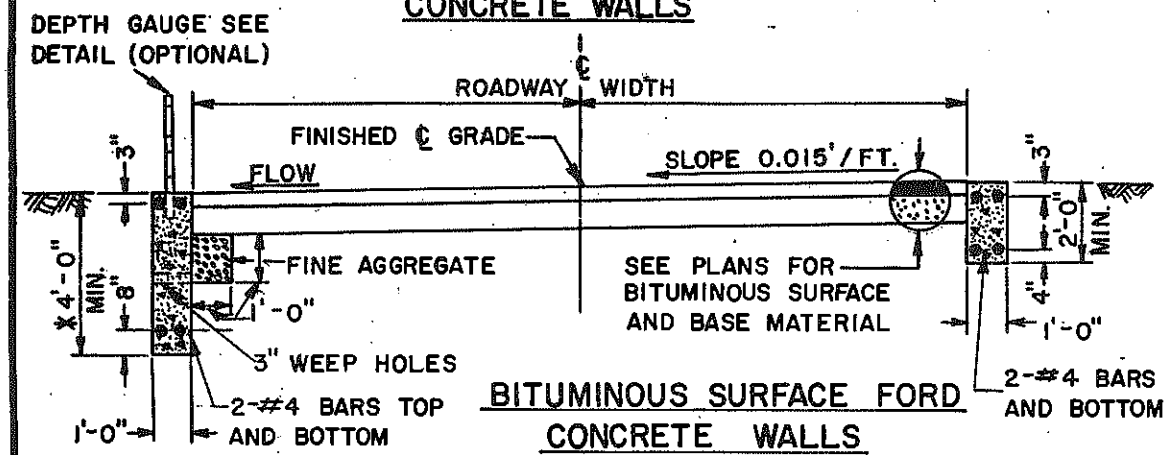

BITUMINOUS SURFACE FORD
CONCRETE WALLS

NOTES

1. FORD WALLS SHALL BE CLASS A CONC. PER SECT. 725.
2. DEPTH GAUGE SHALL BE PAINTED 2-COATS WHITE ENAMEL. NUMERALS AND MARKERS SHALL BE 1-COAT BLACK ENAMEL.
3. NUMBERS ON DEPTH GAUGE TO BE 2" HIGH.
4. HEIGHT OF DEPTH GAUGE OPTIONAL.
5. TWO DEPTH GAUGES MAY BE USED. ONE ON EACH END OF UPSTREAM WALL. START WITH 2' INSTEAD OF 1'.

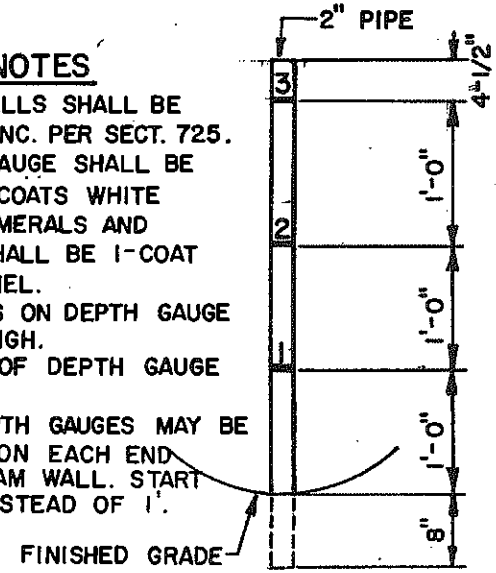

DEPTH GAUGE DETAIL (OPTION OF THE CONTRACTING AGENCY)

DETAIL NO. 552	MARICOPA ASSOCIATION of GOVERNMENTS STANDARD DETAIL	CONCRETE CUT-OFF WALLS		DETAIL NO. 552

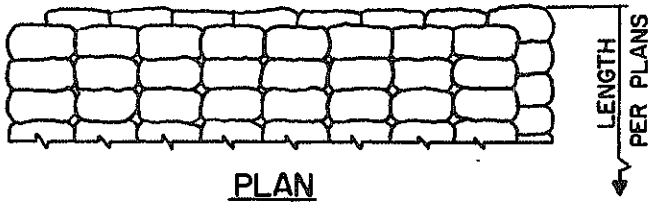

PLAN

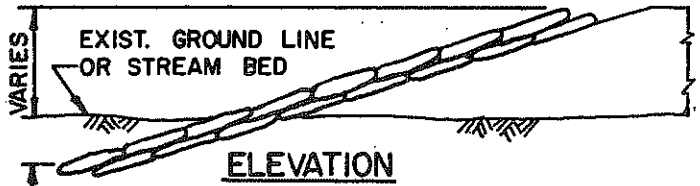

ELEVATION

TYPE 1 RIPRAP

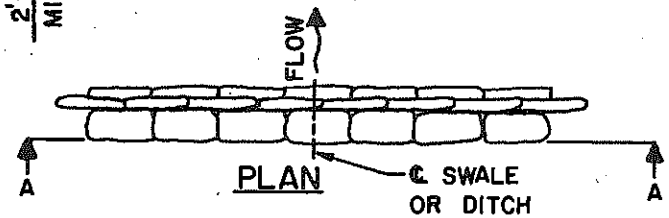

PLAN

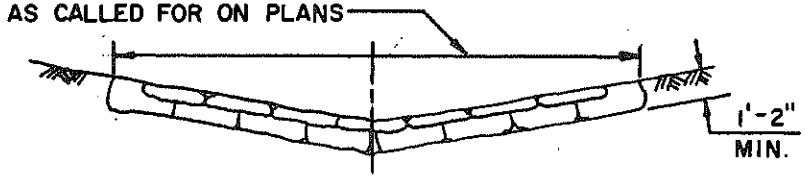

ELEVATION A-A

TYPE 2 RIPRAP

TYPICAL GABIONS

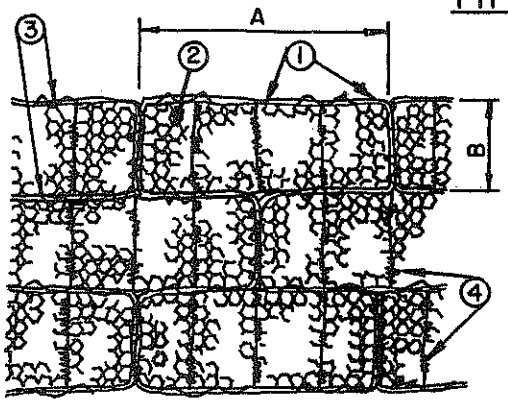

PLAN

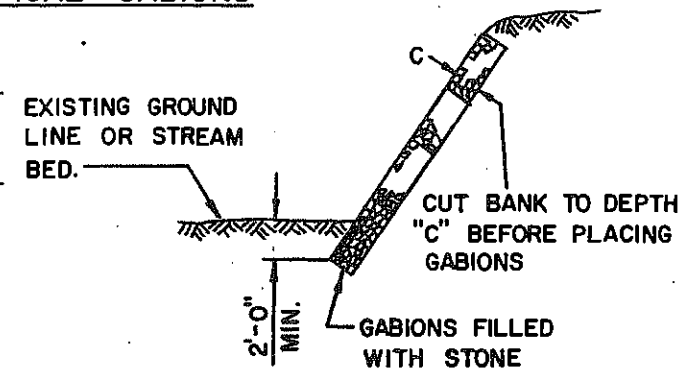

ELEVATION

NOTES

1. PLAIN ROCK OR GROUTED ROCK MAY BE SUBSTITUTED FOR SACKED CONCRETE.
2. GROUT FOR RIPRAP MAY BE PNEUMATICALLY PLACED MORTAR.

NOMINAL SIZE COMBINATIONS

LENGTH A	WIDTH B	DEPTH C
6'	3'	1', 1.5', 3'
9'	3'	1', 1.5', 3'
12'	3'	1', 1.5', 3'

OTHER SIZES AVAILABLE FROM MANUFACTURER.

1. HEAVY GAUGE FRAME WIRE.
2. HEAVY GAUGE TRIPLE-TWIST HEXOGANAL MESH (OR EQUAL) FASTENED TO FRAME WIRE.
3. CONTINUOUS HEAVY GAUGE WRAPPED AROUND FRAMES TO FASTEN GABIONS TO EACH OTHER.
4. PARTITIONS TO PREVENT SHIFTING NORMALLY ONE PER 3' LENGTH. INSTALLED AT FACTORY.

DETAIL NO. 555	MARICOPA ASSOCIATION of GOVERNMENTS STANDARD DETAIL	EROSION PROTECTION / RIPRAP		DETAIL NO. 555