MARICOPA ASSOCIATION of GOVERNMENTS
302 North 1st Avenue, Suite 300 ▲ Phoenix, Arizona 85003
Phone (602) 254-6300 ▲ FAX (602) 254-6490
E-mail: mag@mag.maricopa.gov ▲ Web site: www.mag.maricopa.gov

June 30, 2009

TO: MAG Dark Sky Stakeholders Group

FROM: Heidi Pahl, Regional Planner

SUBJECT: MEETING NOTIFICATION AND TRANSMITTAL OF TENTATIVE AGENDA

Wednesday, July 8, 2009, 10:00 a.m.
Cholla Room 2nd Floor
302 North 1st Avenue, Phoenix

The MAG Dark Sky Stakeholders Group (DSSG) will meet at the time and location listed above. Interested parties may attend in person, by videoconference or by telephone conference call. Those attending by videoconference are encouraged to make arrangements with Craig Chenery at MAG, (602) 254-6300, by the Friday prior to the meeting. Those attending by telephone conference call are requested to contact Steve Gross at (602) 254-6300 for dial-in instructions.

Parking is located under the building and tickets will be validated. For those using transit, the Regional Public Transportation Authority will provide transit tickets for your trip. For those using bicycles, please lock your bicycle in the bike rack in the garage. If you have any questions about the meeting, please contact me at (602) 254-6300.

The following are tentative agenda items for the July 8, 2009 Dark Sky Stakeholders Group meeting:

1. Welcome and Introductions.
2. Continuation of discussion of the draft MAG Model Pattern Outdoor Lighting Code.
3. Next Meeting: Wednesday July 22, 2009.

Please feel free to invite fellow staff members that you feel may be interested in the topics on the agenda.

DRAFT

MAG Dark Sky Stakeholders Group (DSSG)
Draft Meeting Notes

June 2, 2009

Chris Luginbuhl led discussion on the draft MAG Pattern Lighting Code (PLC), beginning at section 4.3.

The meeting date and times were changed to second and fourth Wednesday of every month, 10 a.m. to noon in MAG Cholla room.

Section 4.3 – Lamp Type Standards
Glendale noted that they currently have about 19,000 street lights. He said all of the yellow Low Pressure Sodium (LPS) street lights have been replaced at the direction of the City Council. Glendale said that most large cities in Maricopa County use white High Pressure Sodium (HPS) street lights.

Buckeye commented that white light is better than yellow light from a safety perspective.
Avondale noted that they use different color lights in different areas of their city. (e.g. downtown city center vs. residential).

Gilbert asked how glare is measured. It is not easy. One would need a light meter, someone trained to use the light meter and interpret its reading.

Chris Luginbuhul said that he envisioned the MAG PLC as a dynamic document, changing as needed.

There were no comments on Sections 4.4, 4.6, 5.1.

Section 4.5 – Light Trespass Standard
As a reference, below is text from Santa Cruz County Code (provided by Dan Brocious):
"all light fixtures on the residential side of commercial property adjacent to residential property shall be fully shielded and shall be a maximum of 5 feet above grade at the property line and no higher than a line rising 25 degrees above the 5 feet until 100 feet from the property line. All outdoor lighting within one mounting height of residential areas shall have internal house-side shields."

Section 5.3 – Billboard Standards
Stakeholders had concern with "not permitting" the use of LED billboards. Chris Luginbuhl informed that there is a large market push to use LED. At this time, LED is inefficient compared to HPS but LED has lower maintenance cost. Avondale noted that City Councils support the use of LED because it is considered "green" and being sustainable is important to City Councils.

Section 5.3 is controversial. Glendale and Avondale said they are considering installing LED billboards. Chris Luginbuhl said there are many ways to get around a cities lighting code if someone wishes to put up an LED billboard and the city code does not permit it (e.g. use ADOT right of way).

Chris Luginbuhl said the total negative impact of sign lighting is small.

The DSSG discussed ways to write a PLC that would please most agencies.
Chris Luginbuhl mentioned that there could be 3 documents:
1. MAG PLC document (keep it simple)
2. Guidelines with examples and forms
3. Explanations and suggestions of how to implement.

Mesa mentioned that the MAG PLC could be written like a smart based code with different color text representing different topics.

Maricopa Association of Governments

MAG Pattern Lighting Code

version 1: April 27, 2009

Contents

Section 1: Purpose and Intent
Section 2: Conformance with Applicable Codes
Section 3: Applicability
- 3.1 New Uses, Buildings and Major Additions or Modifications
- 3.2 Minor Additions
- 3.3 Resumption of Use After Abandonment
- 3.4 Public Roadways

Section 4: Shielding and Total Outdoor Light Output Standards
- 4.1 Shielding Standards
- 4.2 Total Outdoor Light Output Standards
- 4.3 Lamp Type Standards
- 4.4 Effective Shielding Standard
- 4.5 Light Trespass Standard
- 4.6 Multi-Class Lighting Standard
- 4.7 Curfews

Section 5: Outdoor Advertising Signs
- 5.1 Externally Illuminated Sign Standards
- 5.2 Internally Illuminated Sign and Neon Sign Standards
- 5.3 Billboard Standards
- 5.4 Curfews

Section 6: Special Uses
- 6.1 Recreational Facilities
- 6.2 Outdoor Display Lots
- 6.3 Service Station Canopies
- 6.4 Other Lighting on Parcels with Special Uses

Section 7: Submission of Plans and Evidence of Compliance with Code, Subdivision Plats
- 7.1 Submission Contents
- 7.2 Additional Submission
- 7.3 Subdivision Plats
- 7.4 Lamp or Fixture Substitution
- 7.5 Plan Approval
- 7.6 Certification of Installation

Section 8: Approved Materials and Methods of Construction or Installation/Operation
8.1 Approval of Alternatives
Section 9: Prohibitions
9.1 Sale of Non-Conforming Fixtures and Lamps
9.2 Laser Source Light
9.3 Searchlights
9.4 Outdoor Advertising Off-Site Signs
Section 10: Temporary Exemption
10.1 Request; Renewal; Information Required
10.2 Approval; Duration
10.3 Disapproval; Appeal
Section 11: Other Exemptions
11.1 Nonconformance
11.2 State and Federal Facilities
11.3 Emergency Lighting
11.4 Swimming Pool and Fountain Lighting
Section 12: Appeals
Section 13: Law Governing Conflicts
Section 14: Violation and Penalty
Section 15: Severability
Section 16: Definitions

Note: ***Bold italics*** indicate terms defined in Section 16.

Section 1. Purpose and Intent.

It is the purpose of this Code to define practical and effective measures by which the obtrusive aspects of outdoor light usage can be minimized, while preserving safety, security, and the nighttime use and enjoyment of property. These measures are intended to curtail the degradation of the nighttime visual environment, ***light trespass***, energy and resource waste, and naturally dark skies relied upon by Arizona's world-class astronomical facilities by encouraging lighting practices that direct appropriate amounts of light where and when it is needed, increasing the use of energy-efficient sources, and decreasing wasted light from overlighting and poorly shielded or inappropriately directed lighting fixtures.

It is further recognized that naturally dark landscapes and star-filled skies are valued by many, and that poor lighting practices in outdoor lighting hamper the reasonable use and enjoyment of property and can endanger the public welfare by producing unnecessary glare.

Section 2. Conformance with Applicable Codes.

All ***outdoor lighting fixtures*** shall be installed in conformance with the provisions of this Code, the Building Code, the Electrical Code, and the Sign Code of the jurisdiction as applicable and under appropriate permit and inspection.

Section 3. Applicability.

3.1. New Uses, Buildings and Major Additions or Modifications. For all proposed new land uses, developments, buildings, and structures that require a permit, all ***outdoor light fixtures*** shall meet the requirements of this Code. All building or outdoor lighting additions or modifications of twenty-five (25) percent or more in terms of additional dwelling units, gross floor area, parking spaces, or ***total outdoor lighting output*** as would be permitted by this code for a conforming site, either with a single addition or with cumulative additions subsequent to the effective date of this provision, shall invoke the requirements of this Code for the entire property, including previously installed and any new outdoor lighting. Cumulative modification or replacement of outdoor lighting constituting twenty-five (25) percent or more of the permitted lumens for the parcel, no matter the actual amount of lighting already on a non-conforming site, shall constitute a major addition for purposes of this section.

3.2. Minor Additions. Additions or modifications of less than twenty-five (25) percent to existing uses, as defined in Section 3.1 above, and that require a permit, shall require the submission of a complete inventory and site plan detailing all existing and any proposed new outdoor lighting. Any new lighting

on the site shall meet the requirements of this Code with regard to shielding and lamp type; the ***total outdoor light output*** after the modifications are complete shall not exceed that on the site before the modification, or that permitted by this Code, whichever is larger.

3.3. Resumption of Use after ***Abandonment***. If a property or use with nonconforming lighting is ***abandoned***, then all outdoor lighting shall be reviewed and brought into compliance with this Code before the use is resumed.

3.4. Public Roadways. Lighting for public roadways is covered by the provisions of this Code except the lumen caps of Section 4.2.

Section 4. Shielding, Total Outdoor Light Output and Lamp Type Standards.

4.1. Shielding Standards. All nonexempt ***outdoor lighting fixtures*** shall have shielding as shown in Table 4.1.

Use Codes:
A = all types of fixtures allowed; ***fully shielded*** recommended
F = only ***fully shielded fixtures*** allowed
X = not allowed

Table 4.1 SHIELDING STANDARDS

Add column at end of table for Notes. Didn't have reference for note 5. Preserve information in Note 5 but restructure it. Move Note 3 to definition section.
Class 3 lighting too restrictive. Allow for some leniency for design and architecture of this type of lighting. Examples of not fully shielded decorative lighting from Avondale to be provided at next meeting.

Formatted: Left

LIGHTING CLASS	Shielding
Class 1 lighting **(Color Rendition):**	
Initial output greater than or equal to 2000 ***lumens***	**F**
Initial output below 2000 ***lumens***	**A(1)**
Class 2 lighting **(General Illumination):**	
Initial output greater than or equal to 2000 ***lumens***	**F**
Initial output below 2000 ***lumens***	**A(1)**
Class 3 lighting **(Decorative):**	
Initial output greater than or equal to 2000 ***lumens***	**X**
Initial output below 2000 ***lumens***	**F(2)**
Residential lighting (all Classes)(3):	
Initial output greater than or equal to 1000 ***lumens***	**F**
Initial output below 1000 ***lumens***	**A(1,2,4)**

Notes to Table 4.1

1. ***Spot*** and ***flood lamps*** must be aimed no higher than 45 degrees above straight down (half-way between straight down and straight to the side) when the lamp is visible from any off-site residential property or public roadway (Figure 4.1).

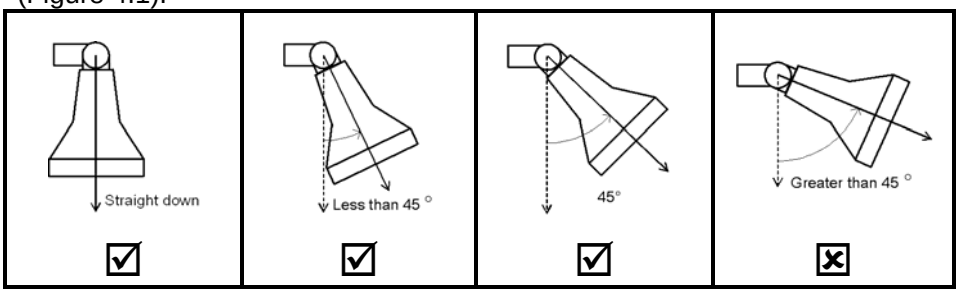

Figure 4.1. Spot light aiming

2. Exception: seasonal decorations using typical unshielded low-wattage lamps shall be permitted from Thanksgiving through January 15.
3. Residential refers to all residential land-use zoning, including all densities and types of housing such as single-family detached and duplexes. Multiple-family residential uses must use standards for ***Class 1***, ***2*** and ***3 lighting***.
4. Any lamp (except ***spot lamps*** - see Note 1) installed on a residential property must be shielded such that the lamp itself is not directly visible from any other residential property.
5. Examples of lamp types of 2000 (1000) lumens and below (The acceptability of a particular light is decided by its lumen output, not wattage; values listed are approximate; check manufacturer's specifications):

(a) 100 (60) Watt Standard incandescent and less
(b) 100 (60) Watt Tungsten-Halogen (quartz) and less
(c) No available High-pressure Sodium or Metal Halide
(d) 26 (13) Watt Compact Fluorescent and less

4.2. *Total Outdoor Light Output* Standards. ***Total outdoor light output*** shall not exceed the limits in Table 4.2. Seasonal decorations, permitted between Thanksgiving and 15 January, are not counted toward these limits; lighting used for external illumination of signs is counted, while lighting used for internal illumination of signs is not counted. (The values in this table are upper limits and not design goals; design goals should be the lowest levels that meet the requirements of the task.)

Table 4.2 MAXIMUM TOTAL OUTDOOR LIGHT OUTPUT STANDARDS
LUMEN CAPS - INITIAL LAMP LUMENS PER NET ACRE

give example of how lumens are calculated.
Insert Group COI (commercial, office, industrial) development language into this PLC.

Formatted: Font: Not Bold
Formatted: Left
Deleted: insert
Deleted: MLO

Uniformity inserted into this PLC can make it complicated. Developers are not required to follow guidelines but may need to defend why not at DRB.
Take lighting inventory in each jurisdiction to showcase good and bad areas of lighting. Need to establish feasible maximum for lumens.
Share Tempe IKEA site plan as example of good lighting.

Deleted: MLO

Deleted: o

Deleted: Invite developers, lighting designers, industry professionals, crime professionals, well-informed public, marketing, etc., to future DSSG meeting.¶

Formatted: Font: Not Bold

Land Use and Fixture Shielding	**Lighting Zone**	
Commercial and Industrial zoning (1)	**LZ 1**	**LZ 2**
total (***fully shielded*** + ***unshielded***)	50000	150000
unshielded only	5000	10000
Residential zoning (2,3)		
total (***fully shielded*** + ***unshielded***)	20000	20000
unshielded only	5000	5000

Notes to Table 4.2
1. This refers to all land-use zoning classifications for multiple family, commercial and industrial uses.
2. This refers to all residential land-use zoning classifications, including all densities and types of housing such as single-family detached and duplexes.
3. Each residential single-family detached home or duplex is allowed up to 5,500 total lumens or the amount indicated in this Table based on the parcel's acreage, whichever is larger. Each is also allowed a maximum of 5,500 lumens of unshielded lighting or the amount indicated in this Table based on the parcel's acreage, whichever is larger, provided Table 4.1 allows the fixture to be unshielded. All residential spot or flood lamps permitted are to be aimed no higher than 45 degrees above straight down (see Note 1 to Table 4.1).

4.3. Lamp Type Standards. All lamps must conform to the types listed in Table 4.3.

Develop a handbook or guidelines for items that do not fit into this PLC but are useful resources. May need to add photo or drawing to PLC to explain text.

Could add a column to table for zones.

Add to definition section: LED lighting for night time pedestrian use.

Class 2 lighting includes HPS which is acceptable to jurisdictions and the astronomy community. LPS is not acceptable to jurisdictions.
There is a large market push to use LED lighting but at this time they are not as energy efficient as HPS, they are half as efficient. LED lights are “green” and jurisdictions support “green” sustainable initiatives.

Deleted:

Deleted: ¶

Deleted: Ad

Deleted: d

Deleted: right end of

Deleted: whereas

Lamp Types:
HPS = high-pressure sodium
LPS = low-pressure sodium

Table 4.3 ALLOWED LAMP TYPES

LIGHTING CLASS	**Allowed Lamp Types**
***Class 1 lighting* (Color Rendition):**	
All initial outputs	**all types**
***Class 2 lighting* (General Illumination):**	
Initial output greater than or equal to 2000 ***lumens***	**HPS, LPS**
Initial output below 2000 ***lumens***	**all types**
***Class 3 lighting* (Decorative):**	
All initial outputs	**all types**
Residential lighting (all Classes)(1):	
All initial outputs	**all types**

Note to Table 4.3 – Add mixed use as a land use type.
1. Residential refers to all residential land-use zoning, including all densities and types of housing such as single-family detached and duplexes. Multiple-family residential uses must use standards for ***Class 1***, ***2*** and ***3*** lighting.

4.4. Effective Shielding Standard. All light fixtures that are required to be ***fully shielded*** shall be installed and maintained in such a manner that the shielding is effective as described in the definition for ***fully shielded*** fixtures.

4.5. Light Trespass Standard. Beyond the shielding requirements of Section 4.1, any private outdoor light fixture with a lamp of initial output over 5000 lumens located within 50 feet of any residential (including multi-family residential) property or public right-of-way (should this be deleted?) shall utilize an internal or external "house-side" shield, with the light fixture and shield oriented to minimize (subjective – what does minimize mean?) light trespass over the adjacent property or right-of-way line (Figure 4.5).

Formatted: Highlight

Formatted: Highlight

Planning Director may at their discretion require a photometric plan to further define lighting plan for property.

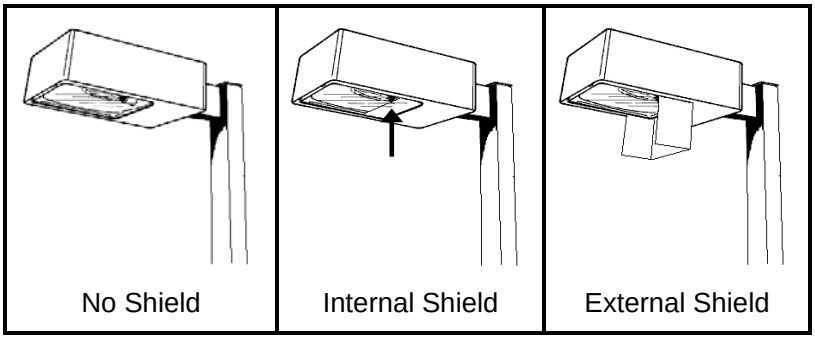

Figure 4.5. House-side shield configurations

May want to add diagram to explain external shield to property line or building setback in case jurisdiction wants to create their own shield?

Deleted: A

If light is 51 feet away from residential and facing opposite direction, how would it be shielded?

Dan Brocious - Santa Cruz example of pole height to limit light trespass.

4.6. ***Multi-Class Lighting*** Standard. ***Multi-Class lighting*** must conform to the shielding and timing restrictions, if any, that apply to the most restrictive included Class.

4.7. Curfews.

A. ***Class 3 lighting*** shall be extinguished between 10:00pm (or when the business closes, whichever is later) and the time the business re-opens. May pose a problem for decorative lighting.

Deleted: .

B. ***Class 2 lighting*** located 75 feet or more from the nearest building or ***display area*** or storage area shall be extinguished between 10:00pm (or within 30 minutes of the business closing, whichever is later) and the time the business re-opens.

Should a reference for 30 minutes of the business opening, be added?
Obtain opinion/professional guidance of municipal police depts.
Parking lot has to go to some fraction of its business illumination, rather than to extinguish. (e.g. power can be reduced to 50 percent). The IECC has similar language.

Section 5. Outdoor Advertising Signs.

5.1. ***Externally Illuminated Sign*** Standards. External illumination for signs shall conform to all provisions of this Code. In particular, such lighting shall be treated as ***Class 1 lighting*** and shall conform to the lamp source, shielding restrictions and lumen caps of Section 4. All upward-directed sign lighting is prohibited.

5.2. ***Internally Illuminated Sign*** and ***Neon Sign*** Standards. (Photos can be added).

A. Outdoor internally illuminated signs must either be constructed with an opaque background and translucent text and symbols, or with a colored (not white, off-white, light gray, cream or yellow) background and generally LIGHTER text and symbols. Lamps used for internal illumination of such signs shall not be counted toward the lumen caps in Section 4.2. Intent is

to not allow white background. Flagstaff and Tucson use this type of language in their codes.

B. Neon signs shall be treated as internally illuminated signs for the purposes of this Code, and shall not have their luminous outputs counted toward the lumen caps in Section 4.2. Neon lighting extending beyond the area considered to be the sign area (as defined in the Sign Code of this jurisdiction) shall conform to all provisions of this Code. In particular, such lighting shall be treated as Class 3 lighting (decorative) and shall conform to the lumen caps of Section 4.

A building that is outlined in neon lights would be covered under decorative lighting using lumens/linear foot.

C. Other internally-illuminated panels or decorations not considered to be signage according to the sign code of this jurisdiction (such as illuminated canopy margins or building faces), shall be considered Class 3 lighting (decorative), and shall be subject to the standards applicable for such lighting, including but not limited to the lamp source, shielding standards and lumens per acre caps of Section 4.

Is there any reason to distinguish between freestanding signage and building signage? (e.g. Village Inn Sign.) No, exempt.

Deleted: /

Formatted: Indent: Left: 0.25"

Ensure sign code and lighting code work together.

5.3. ***Billboard*** Standards. Lighting for ***billboards*** must meet the following:

A. All luminaires used for external illumination of the billboard must be mounted above the sign and be fully shielded.

B. Total lighting per sign face shall not exceed 60 initial lamp lumens per square foot of illuminated sign face.

C. Multicolor ***LED*** billboards with changeable copy and brightness are not permitted, (discouraged?) Keep 5.3C as is and each community can change as necessary. Conditional use permit (CUP)? Add this to a secondary document with options for different language, including the do nothing option. This code is not making a specific recommendation on 5.3C.

Formatted: Highlight

Formatted: Not Highlight

Formatted: Not Highlight

Grandfathering applies.

Formatted: Indent: Left: 0.25"

5.4. Curfews. Illumination for all advertising signs except ***billboards***, both externally and internally illuminated, shall be turned off at the curfew times listed in Table 5.4 or when the business closes, whichever is later. Signs

subject to curfews are required to have functioning and properly adjusted automatic shut-off timers. Light background (white, off-white, light gray, cream or yellow) ***internally illuminated signs***, installed legally before enactment of this code [enter date], may continue to be used and illuminated but must conform to the curfews as indicated.

Table 5.4 ILLUMINATED SIGN CURFEWS

Sign Type and Land Use Zone (1)	**Curfew**
Commercial and Industrial zoning	
Opaque Background	10pm
Colored Background	10pm
Light Background	8pm
All residential zoning	
Opaque Background	9pm
Colored Background	9pm
Light Background	6pm

Note to Table 5.4
1. Land Use Zoning refers to the predominant use of land by area within 1000 feet of the parcel on which the sign is located.

Section 6: Special Uses.

6.1. Recreational Facilities.

A. Class of Play: Fields designed primarily for use by municipal or amateur leagues, training, recreational or social levels, shall be considered ***Sports Class IV*** as defined by the Illuminating Engineering Society of North America (IESNA). Fields designed primarily for college, semiprofessional, professional or national levels shall be considered ***Sports Class I***, ***Sports Class II*** or ***Sports Class III*** as defined by IESNA.

B. Lighting Class and Amount: Lighting for outdoor athletic fields, courts or tracks shall be considered ***Class 1 lighting*** (Color Rendition), and shall be exempt from the ***lumens*** per acre limits of Section 4.2.

C. Shielding: ***fully shielded*** lighting is required for fields designed for ***Sports Class III*** and ***Sports Class IV*** levels of play. Facilities designed for ***Sports Class I*** and ***Sports Class II*** levels of play shall utilize ***luminaires*** with minimal uplight consistent with the illumination constraints of the design. Where ***fully shielded*** fixtures are not utilized, acceptable ***luminaires*** shall include those which:

1. Are provided with internal and/or external glare control louvers and installed so as to minimize uplight and offsite light trespass, and;

2. Are installed and maintained with aiming angles that permit no greater than five percent (5%) of the light emitted by each fixture to project above the horizontal.

D. ***Illuminance***: All lighting installations shall be designed to achieve no greater than the minimal ***illuminance*** levels for the activity as recommended by the Illuminating Engineering Society of North America (IESNA) for the ***Sports Class*** as described in Section 6.1.A.

E. Off-site spill: The installation shall also limit off-site spill (off the parcel containing the sports facility) to the maximum extent possible consistent with the illumination constraints of the design.

F. Certification: Every such lighting system design and installation shall be certified by a registered engineer as conforming to all applicable restrictions of this Code.

G. Curfew: All events shall be scheduled so as to complete all activity before 11pm. Illumination of the playing field, court or track shall be permitted after the curfew only to conclude a scheduled event that was unable to conclude before the curfew due to unusual circumstances.

6.2. Outdoor Display Lots.

A. Lighting Class: Lighting for display lots shall be considered ***Class 1 lighting*** (Color Rendition).

B. Shielding: All display lot lighting shall utilize ***fully shielded luminaires*** that are installed in a fashion that maintains the ***fully shielded*** characteristics.

C. ***Lumen*** Limit: total outdoor light output for the display lot area only shall not exceed 300000 ***lumens*** per acre.

D. Curfew: Display lot lighting exceeding the ***lumens*** per acre cap of Section 4.2 shall be turned off at the curfew listed in Section 6.1 or within thirty minutes after closing of the business, whichever is later. Lighting in the display lot after this time shall be considered ***Class 2 lighting***, and shall conform to all restrictions of this Code applicable for ***Class 2 lighting***, including the lumens per acre caps in Section 4.2.

6.3. Service Station Canopies.

A. Lighting for service station canopies shall be considered ***Class 2 lighting*** (General Illumination).

B. Shielding: All ***luminaires*** mounted on or recessed into the lower surface of service station canopies shall be ***fully shielded*** and utilize flat lenses.

C. Total Under-Canopy Output: The total light output used for illuminating service station canopies, defined as the sum of all under-canopy initial bare-lamp outputs in ***lumens***, shall not exceed 40 ***lumens*** per square foot of canopy. All lighting mounted under the canopy, including but not limited to ***luminaires*** mounted on the lower surface or recessed into the lower surface of the canopy and any lighting within signage or illuminated panels over the pumps, is to be included toward the total at full initial ***lumen*** output.

D. The ***lumen*** output of lamps mounted on or within the lower surface of a canopy is included toward the ***lumen*** caps in Section 4.2 according to the method defined for ***total outdoor light output***. Other lighting located under a canopy but not mounted on or within the lower surface is included toward the ***lumen*** caps in Section 4.2 at full initial output.

6.4. Other Lighting on Parcels with Special Uses. All lighting not directly associated with the special use areas above shall conform to the lighting standards described in this Code, including but not limited to the shielding requirements of Section 4.1, the ***lumens*** per acre limits of Section 4.2 and the lamp type standards of Section 4.3. The ***net acreage*** for the determination of compliance with Section 4.2 shall not include the area of the athletic field or outdoor ***display lot***; the area of any service station canopy shall be included in the net acreage.

Section 7. Submission of Plans and Evidence of Compliance with Code, Subdivision Plats.

7.1. Submission Contents. The applicant for any permit required by any provision of the laws of this jurisdiction in connection with proposed work involving ***outdoor lighting fixtures*** shall submit (as part of the application for permit) evidence that the proposed work will comply with this Code. Even should no other such permit be required, the installation or modification (except for routine servicing and same-type lamp replacement) of any exterior lighting shall require submission of the information described below. The submission shall contain but shall not necessarily be limited to the following, all or part of which may be part or in addition to the information required elsewhere in the laws of this jurisdiction upon application for the required permit:

A. plans indicating the location on the premises of all ***outdoor lighting fixtures***, both proposed and any already existing on the site;

B. description of all ***outdoor lighting fixtures***, both proposed and existing. The description may include, but is not limited to, catalog cuts and illustrations by manufacturers (including sections where required); lamp types, wattages and initial ***lumen*** outputs;

C. photometric data, such as that furnished by manufacturers, or similar showing the angle of cut off of light emissions.

7.2. Additional Submission. The above required plans, descriptions and data shall be sufficiently complete to enable the designated official to readily determine whether compliance with the requirements of this Code will be secured. If such plans, descriptions and data cannot enable this ready determination, the applicant shall additionally submit as evidence of compliance to enable such determination such certified reports of tests as will do so provided that these tests shall have been performed and certified by a recognized testing laboratory.

7.3. Subdivision Plats. If any subdivision proposes to have installed street or other common or public area outdoor lighting, submission of the information as described in Section 7.1 shall be required for all such lighting.

7.4. Lamp or Fixture Substitution. Should any ***outdoor light fixture*** or the type of light source therein be changed after the permit has been issued, a change request must be submitted to the designated official for approval, together with adequate information to assure compliance with this Code. Approval must be received prior to substitution.

7.5. Plan Approval. If the designated official determines that the proposed lighting does not comply with this Code, the permit shall not be issued or the plan approved.

7.6. Certification of Installation. For all projects where the ***total outdoor light output*** of the proposed lighting equals or exceeds 300,000 ***lumens***, certification that the lighting, as installed, conforms to the approved plans shall be provided by a certified engineer before the certificate of occupancy is issued. Until this certification is submitted, approval for use of a Certificate of Occupancy shall not be issued for the project.

Section 8. Approved Materials and Methods of Construction or Installation/Operation.

8.1. Approval of Alternatives. The provisions of this Code are not intended to prevent the use of any design, material, or method of installation or operation not specifically prescribed by this Code, provided any such alternate has been approved by the designated official. The designated official may approve any such proposed alternate providing he/she finds that it:

A. provides at least approximate equivalence to that applicable specific requirements of this Code, and

B. is otherwise satisfactory and complies with the intent of this Code.

Section 9. Prohibitions.

9.1. Sale of Non-Conforming Fixtures and Lamps. The installation, sale, offering for sale, lease or purchase of any ***outdoor lighting fixture*** or lamp the use of which is not allowed by this Code is prohibited.

9.2. Laser Source Light. The use of laser source light or any similar high intensity light for outdoor advertising or entertainment, when projected above the horizontal, is prohibited.

9.3. ***Searchlights***. The operation of ***searchlights*** for advertising purposes is prohibited.

9.4. ***LED Billboards***. ***Billboard*** signs using ***LED***s as the light source are prohibited except for the display of time and temperature.

Section 10. Temporary Exemption.

10.1. Request; Renewal; Information Required. Any person may submit, on a form prepared by the jurisdiction, to the designated official, a temporary exemption request. The request shall contain the following information:

A. specific Code exemption(s) requested;
B. purpose of proposed lighting;
C. duration of requested exemption(s);
D. information for each luminaire and lamp combination as required in section 7.1;
E. proposed location on premises of the proposed outdoor light fixture(s);
F. previous temporary exemptions, if any, and addresses of premises hereunder;
G. such other data and information as may be required by the designated official.

10.2. Approval; Duration. The designated official shall have five (5) business days from the date of submission of the request for temporary exemption to act, in writing, on the request. If approved, the exemption shall be valid for not more than thirty (30) days from the date of issuance of the approval. The approval shall be renewable upon further written request, at the discretion of the designated official, for a maximum of one (1) additional thirty (30) day period. The designated official is not authorized to grant more than one (1)

temporary permit and one (1) renewal for a thirty (30) day period for the same property within one (1) calendar year.

10.3. Disapproval; Appeal. If the request for temporary exemption or its extension is disapproved, the person making the request will have the appeal rights provided in Section 12.

Section 11. Other Exemptions.

11.1. Nonconformance

A. A. Bottom-mounted or unshielded outdoor advertising sign lighting shall not be used beginning five years after enactment of this Code.

B. B. All other outdoor light fixtures lawfully installed prior to and operable on the effective date of this Code are exempt from all requirements of this Code. There shall be no change in use or lamp type, or any replacement (except for same-type and same-output lamp replacement) or structural alteration made, without conforming to all applicable requirements of this Code. Further, if the property is abandoned, or if there is a change in use of the property, the provisions of this Code will apply when the abandonment ceases or the new use commences.

11.2. State and Federal Facilities. Compliance with the intent of this Code at all State and Federal facilities is encouraged.

11.3. Emergency Lighting. Emergency lighting, used by police, firefighting, or medical personnel, or at their direction, is exempt from all requirements of this code for as long as the emergency exists.

11.4. Swimming Pool and Fountain Lighting. Underwater lighting used for the illumination of swimming pools and fountains is exempt from the lamp type and shielding standards of Section 4.1, though it must conform to all other provisions of this code.

Section 12. Appeals.

Any person substantially aggrieved by any decision of the designated official made in administration of the Code has the right and responsibilities of appeal to the Advisory/Appeals Board of this jurisdiction.

Section 13. Law Governing Conflicts.

Where any provision of federal, state, county, township or city statutes, codes, or laws conflicts with any provision of this Code, the most restrictive shall govern unless otherwise regulated by law.

Section 14. Violation and Penalty.

It shall be a civil infraction for any person to violate any of the provisions of this Code. Each and every day or night during which the violation continues shall constitute a separate offense. A fine shall be imposed of not less than fifty dollars nor more than seven hundred dollars for any individual or not less than 100 nor more than ten thousand dollars for any corporation, association, or other legal entity for each offense. The imposition of a fine under this Code shall not be suspended.

Section 15. Severability.

If any of the provisions of this Code or the application thereof is held invalid, such invalidity shall not affect other provisions or applications of this Code which can be given effect, and to this end, the provisions of this Code are declared to be severable.

Section 16. Definitions.

As used in this Code, unless the context clearly indicates otherwise, certain words and phrases shall mean the following:

16.1. Abandoned. The relinquishment of a property, or the cessation of a use or activity by the owner or tenant for a period of six months. A use shall be deemed abandoned when such use is suspended as evidenced by the cessation of activities or conditions which constitute the principle use of the property.

16.2. Billboard. Any sign designed for use with changeable advertising copy and which is normally used for the advertisement of goods produced or services rendered at locations other than the premises on which the sign is located.

16.3. Class 1 Lighting. All outdoor lighting used for, but not limited to, outdoor sales or eating areas, assembly or repair areas, advertising and other signs, recreational facilities and other similar applications where COLOR RENDITION IS IMPORTANT to preserve the effectiveness of the activity. Designation of lighting as Class 1 requires a finding by the Planning Director of the essential nature of color rendition for the application. Recognized ***Class 1 lighting*** uses are: outdoor eating and retail food or beverage service areas; outdoor maintenance areas; display lots; assembly areas such as concert or theater amphitheaters.

16.4. Class 2 Lighting. All outdoor lighting used for, but not limited to, illumination for walkways, roadways, equipment yards, parking lots and

outdoor security where GENERAL ILLUMINATION for safety or security of the grounds is the primary concern.

16.5. Class 3 Lighting. Any outdoor lighting used for DECORATIVE effects including, but not limited to, architectural illumination, flag and monument lighting, and illumination of trees, bushes, etc.

16.6. Sports Class I/II/III/IV. Level of sports play as defined by the Illuminating Engineering Society of North America. This level is primarily determined by the number and therefore distance of spectators.

16.7. Development Project. Any residential, commercial, industrial or mixed use subdivision plan or development plan which is submitted to the City for approval.

16.8. Direct Illumination. ***Illumination*** resulting from light emitted directly from a lamp or ***luminaire***, not light diffused through translucent signs or reflected from other surfaces such as the ground or building faces.

16.9. Directly Visible. Allowing a direct line-of-sight to the light source or lamp.

16.10. Display Lot or Area. Outdoor areas where active nighttime sales activity occurs AND where accurate color perception of merchandise by customers is required. To qualify as a ***display lot***, one of the following specific uses must occur: automobile sales, boat sales, tractor sales, building supply sales, gardening or nursery sales, assembly lots, swap meets. Uses not listed here must be approved as display lot uses by the Planning Director.

16.11. Flood Lamp. See ***Spot Lamp***.

16.12. Footcandle. One ***lumen*** per square foot. Unit of ***illuminance***. It is the luminous flux per unit area in the Imperial system. One footcandle equals approximately 10 lux.

16.13. Fully Shielded (Light Fixture). A lighting fixture constructed in such a manner that all light emitted by the fixture, either directly from the lamp or a diffusing element, or indirectly by reflection or refraction from any part of the ***luminaire***, is projected below the horizontal. Any structural part of the light fixture providing this shielding must be permanently affixed.

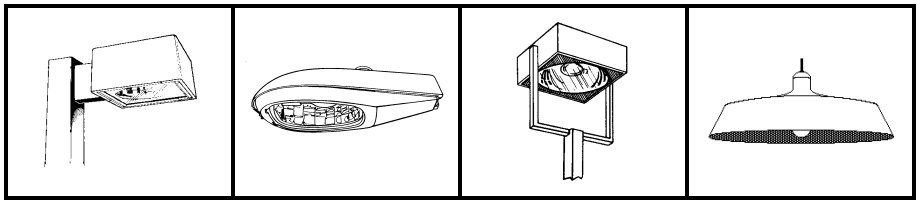

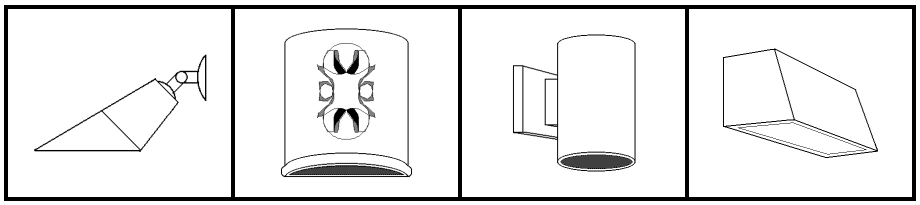

Figure 16.13a. Examples of fully shielded fixtures.

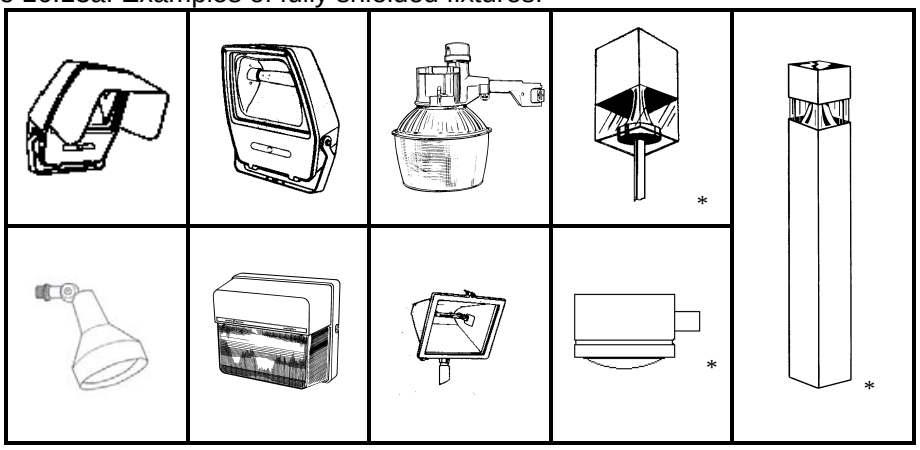

Figure 16.13b. Examples of fixtures that are NOT fully shielded (*even though the lamp in these fixtures is shielded from direct view when viewed from the side or above, reflective surfaces and/or lens covers are directly visible from the side).

16.14. Illuminance. The amount of light falling onto a unit area of surface (luminous flux per unit area) - measured in ***lumens*** per square meter (lux) or lumens per square foot (footcandles).

16.15. Installed. The attachment, or assembly fixed in place, whether or not connected to a power source, of any ***outdoor light fixture***.

16.16. LED. Light emitting diode.

16.17. Light Trespass. Light falling across property boundaries, on property not containing the originating light source.

16.18. Lighting Zones. The two ***lighting zones*** are defined on the Lighting Zone Map, by this reference made a part of this Code. Guidelines used to guide the delineation of the ***lighting zones*** are:

A. Lighting Zone LZ 1. This Zone includes predominantly residential areas, including small neighborhood commercial or industrial areas mostly surrounded by residential areas.

B. Lighting Zone LZ 2. This Zone includes urban areas with primary land uses for commercial, business and industrial activity, including urban multi-family residential areas mostly surrounded by commercial areas.

16.19. Lumen. Unit of luminous flux; used to measure the amount of light emitted by lamps.

16.20. Luminaire. A complete lighting assembly (including the lamp, housing, reflectors, lenses and shields), less the support assembly (pole or mounting bracket); a light fixture. Includes luminous tubes, lamps or similar devices, permanently installed or portable, used for illumination, decoration, or advertisement. Such devices shall include, but are not limited to lights used for:

A. parking lot or ***parking garage*** lighting;
B. roadway and driveway lighting;
C. pedestrian or walkway lighting;
D. entryway lighting;
E. buildings and structures;
F. recreational areas;
G. landscape lighting;
H. ***billboard***s and other signs (advertising or other);
I. product ***display area*** lighting;
J. building or structure decoration;
K. building overhangs and open canopies.

For purposes of determining ***total outdoor light output*** from a ***luminaire*** (see Table 4.1), lighting assemblies which include multiple lamps within a single ***luminaire*** or on a single pole or standard shall be considered as a single unit (Figure 16.20).

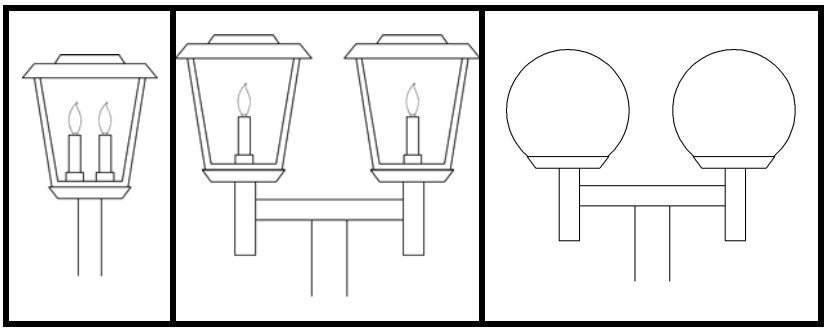

Figure 16.20. Fixtures with multiple lamps in a single fixture (left) and on a single pole (center, right)

16.21. Luminous tube. A glass tube filled with a gas or gas mixture (including neon, argon, mercury or other gasses), usually of small diameter (10-15 millimeters), caused to emit light by the passage of an electric current, and commonly bent into various forms for use as decoration or signs. A "neon" tube. Does not include common fluorescent tubes.

16.22. Lux. One ***lumen*** per square meter. Unit of ***illuminance***. It is the luminous flux per unit area in the metric system. One lux equals approximately 0.1 footcandles.

16.23. Multi-Class Lighting. Any outdoor lighting used for more than one purpose, such as security and decoration, such that its use falls under the definition of two or more Classes as defined for ***Class 1***, ***2*** and ***3 lighting***.

16.24. Neon tube. See Luminous Tube.

16.25. Net Acreage. The remaining area after deleting all portions for proposed and existing streets within a development parcel or subdivision.

16.26. Opaque. Opaque means that a material does not transmit light from an internal illumination source. Applied to sign backgrounds, means that the area surrounding any letters or symbols on the sign allows no light from any internal source to shine though it.

16.27. Outdoor light fixture. See ***Luminaire***.

16.28. Outdoor Light Output, Total. The initial total amount of light, measured in ***lumens***, from all lamps used in ***outdoor light fixtures***. Includes all lights and ***luminous tubes*** used for ***Class 1***, ***Class 2***, ***Class 3*** and ***multi-Class lighting***, and lights used for external illumination of signs, but does not include lights used to illuminate ***internally illuminated signs*** or ***luminous tubes*** used in neon signs. For lamp types that vary in their output as they age (such as high pressure sodium, fluorescent and metal halide), the initial lamp

output, as defined by the manufacturer, is the value to be considered. For determining compliance with Section 4.2 [***Total Outdoor Light Output***] of this Code, the light emitted from lamps in ***outdoor light fixtures*** is to be included in the total output as follows:

A. ***outdoor light fixtures*** installed on poles (such as parking lot ***luminaires***) and light fixtures installed on the sides of buildings or other structures, when not shielded from above by the structure itself as defined in parts B, C or D below, are to be included in the ***total outdoor light output*** by simply adding the initial ***lumen*** outputs of the lamps;

B. ***outdoor light fixtures*** installed under canopies, buildings (including ***parking garage*** decks), overhangs or roof eaves where all parts of the lamp or ***luminaire*** are located at least five (5) feet but less than ten (10) feet from the nearest edge of the canopy, building edge or overhang are to be included in the ***total outdoor light output*** as though they produced only one-quarter (0.25) of the lamp's rated initial ***lumen*** output;

C. ***outdoor light fixtures*** installed under canopies, buildings (including ***parking garage*** decks), overhangs or roof eaves where all parts of the lamp or ***luminaire*** are located at least ten (10) feet but less than thirty (30) feet from the nearest edge of the canopy, building edge or overhang are to be included in the ***total outdoor light output*** as though they produced only one-tenth (0.10) of the lamp's rated initial ***lumen*** output.

D. ***outdoor light fixtures*** installed under canopies, buildings (including ***parking garage*** decks), overhangs or roof eaves where all parts of the lamp or ***luminaire*** are located thirty (30) or more feet from the nearest edge of the canopy, building edge or overhang are not to be included in the ***total outdoor light output***. Such lamps must however conform to the lamp source and shielding requirements of Section 4.

16.29. Outdoor Recreation Facility. An area designed for active recreation, whether publicly or privately owned, including, but not limited to, baseball diamonds, soccer and football fields, golf courses, tennis courts, and swimming pools.

16.30. Parking Garage. A multi-level or covered structure for parking that is open to the outside air. Includes parking facilities under buildings when the area is open to the outside at more locations than just the automobile entries and exits.

16.31. Person. Any individual, tenant, lessee, owner, or any commercial entity including but not limited to firm, business, partnership, joint venture, or corporation.

16.32. Searchlight. A lighting assembly designed to direct the output of a contained lamp in a specific tightly focused direction (a beam) with a reflector located external to the lamp, and with a swiveled or gimbaled mount to allow the assembly to be easily redirected. Such lights are used commonly to sweep the sky for advertisement purposes.

16.33. Sign, Externally Illuminated. A sign illuminated by light sources from the outside.

16.34. Sign, Internally Illuminated. A sign illuminated by light sources enclosed entirely within the sign cabinet and not directly visible from outside the sign.

16.35. Sign, Neon. A sign including ***luminous tubes*** formed into text, symbols or decorative elements and directly visible from outside the sign cabinet.

16.36. Spot Lamp. A specific form of lamp designed to direct its output in a specific direction (a beam) with a reflector formed from the glass envelope of the lamp itself. Such lamps are so designated by the manufacturers and are often used in residential outdoor area lighting (Figure 16.36).

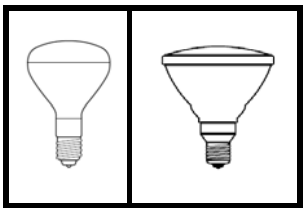

Figure 16.36. Spot lamps

16.37. Temporary Lighting. Lighting which does not conform to the provisions of this Code and which will not be used for more than one thirty (30) day period within a calendar year, with one thirty (30) day extension. Temporary lighting is intended for uses which by their nature are of limited duration; for example holiday decorations, civic events, or construction projects.

16.38. Unshielded (Light Fixture). A lighting fixture constructed in such a manner that a fraction of the light emitted by the fixture, either directly from the lamp or a diffusing element, or indirectly by reflection or refraction from any part of the ***luminaire***, is projected above the horizontal.

Lighting Zone Map