Electric Vehicle Charging Infrastructure Deployment Guidelines For The Greater Phoenix Area

April, 2010
Version 3.0

ELECTRIC TRANSPORTATION ENGINEERING CORPORATION

Disclaimers

This document was prepared for establishing the foundation for the initial deployment of EVSE by Electric Transportation Engineering Corporation. Electric Transportation Engineering Corporation, nor any of their affiliates:

> (a) represents, guarantees or warrants to any third party, either expressly or by implication: (i) the accuracy, completeness or usefulness of; (ii) the intellectual or other property rights of any person or party in; or (iii) the merchantability, safety or fitness for purpose of; any information, product or process disclosed, described or recommended in this document,
> (b) assumes any liability of any kind arising in any way out of the use by a third party of any information, product or process disclosed, described or recommended in this document, or any liability arising out of reliance by a third party upon any information, statements or recommendations contained in this document.

Should third parties use or rely on any information, product or process disclosed, described or recommended in this document, they do so entirely at their own risk.

This report was prepared as an account of work sponsored by an agency of the United States Government. Neither the United States Government nor any agency thereof, nor any of their employees, makes any warranty, express or implied, or assumes any legal liability or responsibility for the accuracy, completeness, or usefulness of any information, apparatus, product, or process disclosed, or represents that its use would not infringe privately owned rights. Reference herein to any specific commercial product, process, or service by trade name, trademark, manufacturer, or otherwise does not necessarily constitute or imply its endorsement, recommendation, or favoring by the United States Government or any agency thereof. The views and opinions of authors expressed herein do not necessarily state or reflect those of the United States Government or any agency thereof.

This material is based upon work supported by the
Department of Energy under Award Number DE-EE0002194.

© 2010 Electric Transportation Engineering Corporation
All rights reserved

ETEC Document #021213.0 April 2010

Acknowledgements

ECOtality/eTec would like to thank the following organizations for their participation and contribution to these Deployment Guidelines:

ECOtality/eTec would also like to acknowledge Maricopa County, Town of Paradise Valley, City of Apache Junction, Town of Buckeye, Town of Carefree, Town of Gila Bend, Gila Bend IC, Town of Queen Creek, City of Litchfield Park, City of Surprise, City of Tolleson and Town of Youngtown for their assistance on the Deployment Guidelines.

Table of Contents

1. Introduction 1
2. Electric Vehicle Technology 2
A. Electric Vehicle Configurations 2
B. Electric Vehicle Categories 4
C. Batteries 4
D. Automaker Plans 6
3. Charging Requirements 7
A. Charging Components 7
B. Charging Levels 9
C.. Level 1 versus Level 2 Considerations 12
D. General Requirements 12
4. Charging Scenarios 15
A. Single Attached/Detached Garages 15
B. Car Port 20
C. Multi-Family Dwellings 21
D. Commercial Fleets 23
E. Publicly Available Charging Stations 25
5. Additional Charging Considerations 33
A. Signage 33
B. Lighting and Shelter 34
C. Accessibility Recommendations 35
D. Safety Issues related to Indoor Charging 36
E. Installations Located in Flood Zones 36
F. Point of Sale Options 37
G. Data Collection 39
H. Vandalism 39
I. Station Ownership 40
J. Maintenance 40
6. Codes and Standards 41
A. Regulatory Agencies 41
B. National Electric Code 41
C. SAE and UL 42
D. Occupational Safety and Health 43
E. Engineering, Permitting & Construction 43
7. Utility Integration 44
A. Background 44
B. Interconnection Requirements 47
C. Commercial Electrical Supply/Metering 47

Figures

Figure 2-1 Battery Electric Vehicle 2
Figure 2-2 Series Plug-In Hybrid Vehicle Block Diagram 3
Figure 2-3 Parallel Plug-In Hybrid Vehicle Block Diagram 3
Figure 2-4 Automaker PHEV and BEV Plans 6
Figure 3-1 Level 2 Charging Diagram 7
Figure 3-2 J1772 Connector and Inlet (Preliminary) 8
Figure 3-3 Level 1 Charging Diagram 9
Figure 3-4 Level 1 Cord Set 10
Figure 3-5 Level 2 Charging 11
Figure 3-6 DC Fast Charging Charging (DC Charging) 11
Figure 3-7 Chrysler EPIC DC Fast Charging Charging (90kW) circa 1997 12
Figure 3-8 Wheel Stop 13
Figure 3-9 Garage Wheel Stop 13
Figure 4-1 Double Garage Location for EVSE 16
Figure 4-2 Typical Single Garage Location for EVSE 17
Figure 4-3 Typical Level 1 and Level 2 Installations for a Residential Garage 18
Figure 4-4 Installation Process for a Residential Garage/Car Port 19
Figure 4-5 Installation Considerations for Outdoor Parking 20
Figure 4-6 Typical EVSE Installation in Multi-Family Lot 21
Figure 4-7 Installation Process for Multi-Family 22
Figure 4-8 Level 2 Commercial EV Charging Location 24
Figure 4-9 Installation Process for Commercial Fleet Operations 25
Figure 4-10 Example Publicly Available Charging Layout 28
Figure 4-11 Publicly Available Charging Examples 28
Figure 4-12 Example Shopping Mall EVSE Parking 30
Figure 4-13 Indoor Charging 30
Figure 4-14 Outdoor Charging 30
Figure 4-15 Installation Flowchart for Public Charging 31
Figure 4-16 Curbside Charging 32
Figure 5-1 No Parking Except for Electric Vehicles Sign 33
Figure 5-2 Wayfinding Sign 33
Figure 5-3 Public Charging with Shelter and Lighting 34
Figure 5-4 Parking Accessibility Requirements 36
Figure 5-5 Smartcard Reader 38
Figure 5-6 RFID Fob 39
Figure 5-7 RFID Reader and Communications Terminal 39
Figure 7-1 Smart Grid Infrastructure 45

Tables

Table 2-1 EV Charge Times 5
Table 5-1 Accessible Charging Station Recommendations 35

Acronyms

BEV Battery Electric Vehicle - vehicles powered 100% by the battery energy storage system available on-board the vehicle.

CCID Charge Current Interrupting Device

EV Electric Vehicle

EREV Extended Range Electric Vehicle – see PHEV.

EVSE Electric Vehicle Supply Equipment – equipment that provides for the transfer of energy between the electric utility power and the electric vehicle.

ICE Internal Combustion Engine

kW Kilowatts - A measurement of electric power. Used to denote the power an electrical circuit can deliver to a battery.

kWh Kilowatt Hours - A measurement of total electrical energy used over time. Used to denote the capacity of an EV battery.

NEC National Electric Code - part of the National Fire Code series established by the National Fire Protection Association (NFPA) as NFPA 70. The NEC codifies the requirements for safe electrical installations into a single, standardized source.

NEMA National Electrical Manufacturers Association - Develops standards for electrical products.

PHEV Plug-in Hybrid Electric Vehicle – vehicles utilizing a battery and an internal combustion engine (ICE) powered by either gasoline or diesel.

REEV Range Extended Electric Vehicle – see PHEV.

RTP Real Time Pricing – a concept for future use whereby utility pricing is provided to assist a customer in selecting the lowest cost charge.

SAE Society of Automotive Engineers - standards development organization for the engineering of powered vehicles.

TOU Time of Use - an incentive based electrical rate established by an electric utility.

V2G Vehicle to Grid - a concept that allows the energy storage in electric vehicles to be used to support the electrical grid during peak electrical loads.

VAC Voltage Alternating Current

Electric Vehicle Charging Infrastructure Deployment Guidelines

1. Introduction

Concerns with global warming, oil shortages and increasing gas prices, along with the rapid rise of more fuel efficient vehicles, are clear indicators of changing consumer preferences and industry direction. As major automotive manufacturers plan to launch plug-in electric vehicles (EV) in 2010, the future of transportation is being propelled by a fundamental shift to cleaner and more efficient electric drive systems.

Electric Transportation Engineering Corporation (eTec), a subsidiary of ECOtality, has been involved in every North American EV initiative since 1989. With over two decades of experience in electric transportation, eTec is the most experienced and qualified solution provider for EVs and supporting infrastructure. eTec's unparalleled EV infrastructure experience, combined with its expertise in batteries, battery charging, utility activities and electric drive systems makes eTec a leader in electric transportation.

ECOtality and eTec developed EV Micro-Climate© as an integrated turn-key program to ensure an area is well equipped with the needed infrastructure to support the consumer adoption of electric transportation. Beginning with extensive feasibility and infrastructure planning studies, the program provides a blueprint to create a rich EV infrastructure. The program is developed with all relevant stakeholders including governmental organizations, utilities, private-sector businesses and automotive manufacturers.

These Deployment Guidelines are not intended to be used as an installation manual or a replacement for approved codes and standards but rather are intended to create a common knowledge base of EV requirements for stakeholders involved in the development and approval of EV charging infrastructure.

Electric Vehicles have unique requirements that differ from internal combustion engine vehicles and many stakeholders are currently not familiar with these requirements. eTec's Electric Vehicle Infrastructure Deployment Guidelines provide the necessary background information for understanding EV requirements and is the foundation upon which the EV Micro-Climate© program builds in order to provide the optimum infrastructure to support and encourage the adoption of electric vehicles wherever it is directed.

2. Electric Vehicle Technology

This section describes the basic electric vehicle technologies that are either available in the marketplace or coming to market in the near future. The focus of this section is on vehicles licensed for the road that incorporate a battery energy storage device with the ability to connect to the electrical grid for the supply of some or all of its fuel energy requirements. Two main vehicle configurations are described along with the four main categories of vehicle applications. Vehicle categories and the relative size of their battery packs are discussed in relationship recommended charging infrastructure.

A. Electric Vehicle Configurations

- **Battery Electric Vehicle (BEV)**

Battery Electric Vehicles (BEVs) are powered 100% by the battery energy storage system available on-board the vehicle. The Nissan LEAF is an example of a BEV. Refueling the BEV is accomplished by connection to the electrical grid through a connector system that is design specifically for this purpose. Most advanced BEVs have the ability to recapture some of the energy storage utilized through regenerative braking (In simple terms, converting the propulsion motor into a generator when braking). When regenerative braking is applied, BEVs can typically recover 5 to 15 percent of the energy used to propel the vehicle to the vehicle speed prior to braking. (Sometimes manufacturers install solar photovoltaic (PV) panels on vehicle roofs. This typically provides a very small amount of energy relative to the requirements of propelling the vehicle, but integrating PV in the roof can typically provide enough power to operate some small accessory loads.)

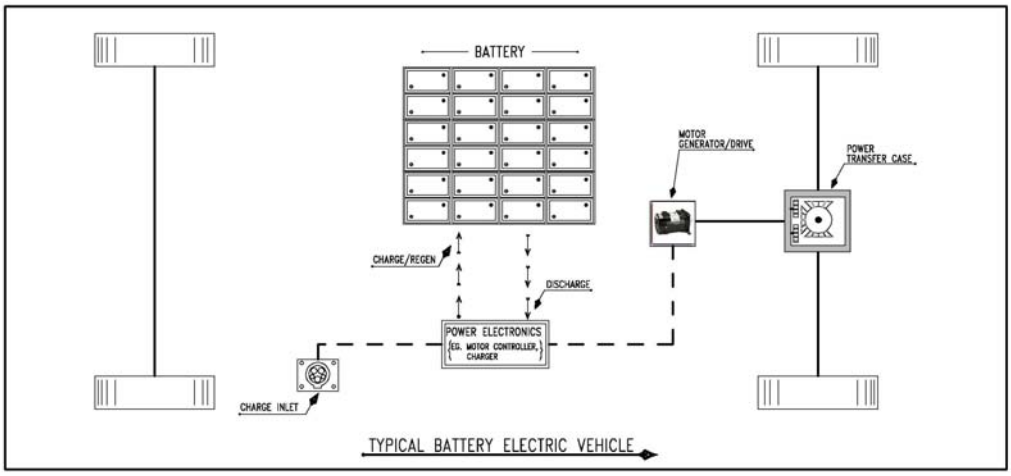

Figure 2-1 Battery Electric Vehicle

A typical BEV can be depicted by the block diagram shown in Figure 2-1. Since the BEV has no other significant energy source, the battery must be selected to meet the BEV range and power requirements. BEV batteries are typically an order of magnitude larger than the batteries in hybrid electric vehicles.

- **Plug-in Hybrid Electric Vehicle (PHEV)**

PHEVs are powered by two energy sources. The typical PHEV configuration utilizes a battery and an internal combustion engine (ICE) powered by either gasoline or diesel. Within the PHEV family, there are two main design configurations, a Series Hybrid as depicted in Figure 2-2 and a Parallel Hybrid as depicted in Figure 2-3. The Series Hybrid vehicle is propelled solely by the electric drive system, whereas the Parallel Hybrid vehicle is propelled by both the ICE and the electric drive system. As with a BEV, a Series Hybrid will typically require a larger and more powerful battery than a Parallel Hybrid vehicle in order to meet the performance requirements of the vehicle solely based on battery power.

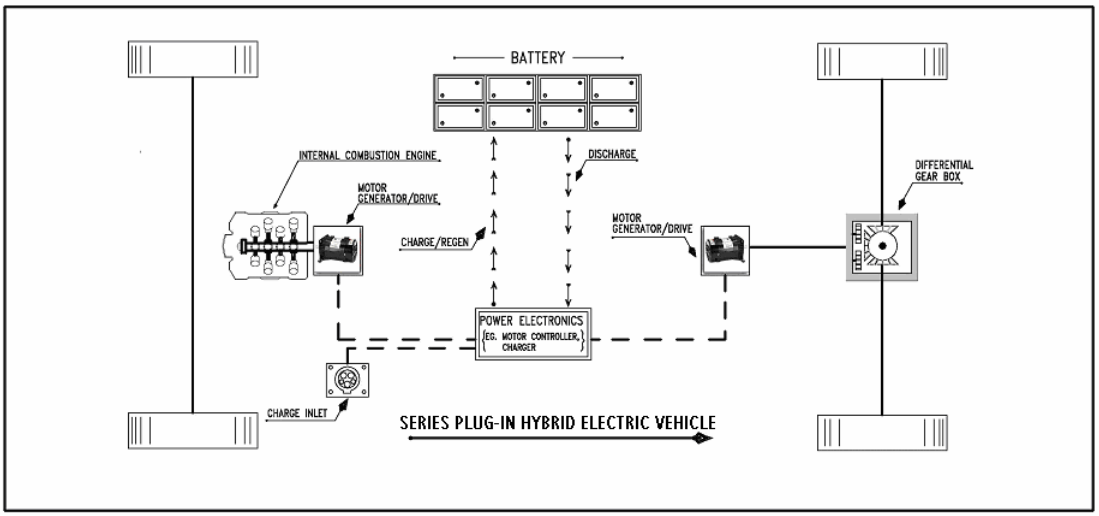

Figure 2-2 Series Plug-In Hybrid Vehicle Block Diagram

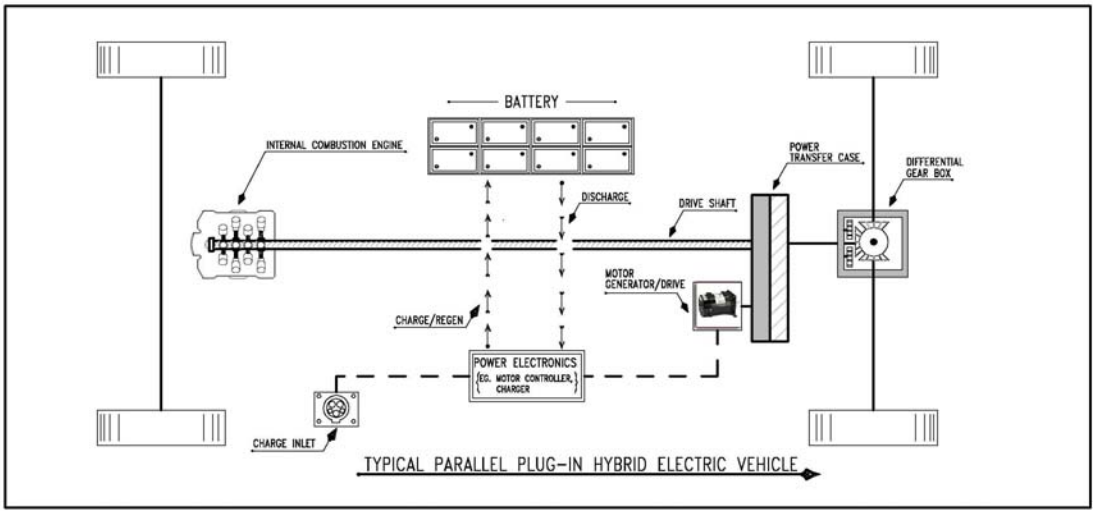

Figure 2-3 Parallel Plug-In Hybrid Vehicle Block Diagram

Manufacturers of PHEVs use different strategies in combining the battery and ICE and may utilize the battery only for the first several miles, such as the Chevy Volt, with the ICE providing generating power for the duration of the vehicle range. Others may use the battery power for sustaining motion and

the ICE for acceleration or higher energy demands at highway speeds. Frequently, the vehicles employing the former strategy gain a designation such as PHEV-20 to indicate that the first 20 miles are battery only. Other terms related to PHEVs may include Range Extended Electric Vehicle (REEV) or Extended Range Electric Vehicle (EREV).

B. Electric Vehicle Categories

EVs can be broken down into the following categories:

- **On-Road Highway Speed Vehicles**

On-Road Highway Speed Vehicle is an EV capable of driving on all public roads and highways. Performance of these On-Road vehicles is similar to Internal Combustion Engine vehicles.

- **City Electric Vehicles**

Traditionally, City Vehicles have been BEVs that are capable of driving on most public roads, but generally are not driven on highways. Top speed is typically limited to 55 mph.

- **Neighborhood Electric Vehicles (NEVs)**

Neighborhood electric vehicles (NEVs) also known as Low Speed Vehicles (LSVs) are BEVs that are limited to 25 mph and are allowed in certain jurisdictions to operate on public streets posted at 35 mph or less.

- **Commercial On-Road Highway Speed Vehicles**

There are a number of commercial electric vehicles including commercial trucks and buses. These vehicles are found as both BEVs and PHEVs. Performance and capabilities of these vehicles are specific to their application.

The focus of the EV Micro-Climate© program is on the first and last bulleted items above. Specialty vehicles such as electric motorcycles and bicycles require a different planning process.

C. Batteries

- **Battery Technology**

Recent advancements in battery technologies will allow EVs to compete with ICE vehicles in performance, convenience and cost. Although lead-acid technology serves many EV applications like forklifts and airport ground support equipment very cost-effectively, the limitations on energy density and repeated cycles of charging and discharging make its application to on-road highway speed EVs less practical.

Today, most major car companies utilize Nickel-Metal-Hydride or various Lithium based technologies for their EVs. Lithium provides 4x the energy of lead-acid and 2x that of Nickel-Metal-Hydride. The materials for Lithium based batteries are generally considered abundant, non-hazardous and lower cost than Nickel based technologies. The current challenge with lithium-

based technologies is increasing battery capacity while maintaining quality, cycle life and lowering production costs.

From an infrastructure standpoint, it is important to consider that, as battery costs are driven down over time, the auto companies will increase the size of the lithium-based battery packs and thus the range of electric vehicles.

- **Relative Battery Capacity**

Battery size or capacity is measured in kilowatt hours (kWh). Battery capacity for electric vehicles will range from as little as 3 kWh to as large as 40 kWh or more. Typically, PHEVs will have smaller battery packs because they have more than one fuel source. BEVs rely completely on the storage from their battery pack for both range and acceleration and therefore require a much larger battery pack than a PHEV for the same size vehicle.

- **Battery Charging Time**

The amount of time to fully charge an EV battery is a function of the battery size and the amount of electric power or kilowatts (kW) that an electrical circuit can deliver to the battery. Larger circuits, as measured by voltage and amperage, will deliver larger amounts of kW. The common 110-120 volts AC (VAC), 15 amp circuit will deliver at minimum 1.1 kW to a battery. A 220-240 VAC, 40 amp circuit (similar to the circuit used for household appliances like dryers and ovens) will deliver at minimum 6 kW to a battery. Table 2-1 provides information on several different on-road highway speed electric vehicles, their battery pack size, and charge times at different power levels to replenish a depleted battery.

Table 2-1 EV Charge Times

		Circuit Size and Power in kW Delivered to Battery			
EV Configuration	**Battery Size (kWh)**	110 VAC, 15 amp **1.1 kW**	110 VAC, 20 amp **1.5 kW**	220 VAC, 40 amp **6 kW**	440 VAC, 85 amp **55 kW**
PHEV-10	**4**	3 h 50 m	2 h 40 m	40 m	n/a
PHEV-20	**8**	7 h 20 m	5 h 20 m	1 h 20 m	n/a
PHEV-40	**16**	14 h 30 m	10 h 40 m	2 h 40 m	17 m
BEV	**24**	21 h 48 m	16 h 00 m	4 h 00 m	26 m
BEV	**35**	31 h 50 m	23 h 20 m	5 h 50 m	38 m
PHEV Bus	**50**	n/a	n/a	8 h 20 m	55 m

Note: Power delivered to battery calculated as follows: 110VAC x 12 Amps x.85 eff.; 110VAC x 16 Amps x .85 eff.; 220VAC x 32 Amps x.85 eff.; 480VAC x √3 x 85 Amps x .85 eff.

D. Automaker Plans

Many automakers have announced plans for the introduction of on-road highway speed EVs in the near future. A summary table of such plans is shown in Figure 2-4 below.

Plug-In Hybrid Electric Vehicles

Company	Model	Price	Battery Type	Battery Size	EV Range (miles)	PHEV Type	Market launch	Production Capacity
BYD	F3DM	$21,915	Lithium-ion	-	62	-	2008	
BYD	F6DM	~$22,000	Lithium-ion	-	62	-	2008	
Fisker	Karma	$87,900	Lithium-ion	22 KWh	50	Series	2010	15k
Ford	Escape PHEV	-	Lithium-ion	10 KWh	30-40	-	2012	
GM	Chevrolet Volt	~$40,000+	Lithium-ion	16 KWh	40	Series	2010	60k by 2012
Opel	Ampera	-	Lithium-ion	16 KWh	40	Series	2012	
Toyota	Prius	~$48,000	Lithium-ion	-	12-18	Parallel	2010	20k-30k
Volkswagen	Golf Twin Drive	-	Lithium-ion	12 KWh	30	-	2010	20 car pilot

Electric Vehicles

Company	Model	Price	Battery Type	Battery Size	EV Range (miles)	Latest Model	Market launch	Production Capacity
BMW	Mini E	-	Lithium-ion	35 KWh	~100+	2009	n.d.	500 pilot
BYD	E6 EV	-	Lithium-ion	18 KWh	249	2009	2009	
Chery Auto.	S18 EV	~$15,000	Lithium-ion	13 KWh	93	2009	2009	
Chrysler	Dodge circuit	-	Lithium-ion	26 KWh	150-200	2010	2010	
Coda	EV Sedan	$45,000	Lithium-ion	34 KWh	90-120	2010	2010	
Ford	Focus EV	-	Lithium-ion	-	100	2011	2011	
Mitsubishi	iMiEV	~$46,000	Lithium-ion	16 KWh	100	2009	2009	20,000
Nissan	EV LEAF	~$24k to ~$34k*	Lithium-ion	24 KWh	100	2010	2010	150,000+
Renault	Fluence ZE (Better Place)	-	Lithium-ion	-	100	2011	2011	100,000
Smart	EV	-	Lithium-ion	-	70	2010	2010	
Subaru	Stella	$47,900	Lithium-ion	9 KWh	55	2009	2009	~170 in 2009
Tesla	Model S	$57,400	Lithium-ion	-	160-300	2011	2011	
Tesla	Roadster EV	$109,000	Lithium-ion	53 KWh	244	2009	2009	
Th!nk	City	$28,000	Sodium or Li	-	110	2010	2010	2,500 (US)

Source: Company data, Credit Suisse estimates

Figure 2-4 Automaker PHEV and BEV Plans[1]

[1] Credit Suisse "Electric Vehicles", Equity Research, Energy Technology/Auto Parts & Equipment, October 1, 2009

3. Charging Requirements

This section covers the terminology and general requirements of Electric Vehicle Supply Equipment (EVSE). EVSE provides for the safe transfer of energy between the electric utility power and the electric vehicle.

E. Charging Components

The terms used to identify the components in the delivery of power to the vehicle are defined first.

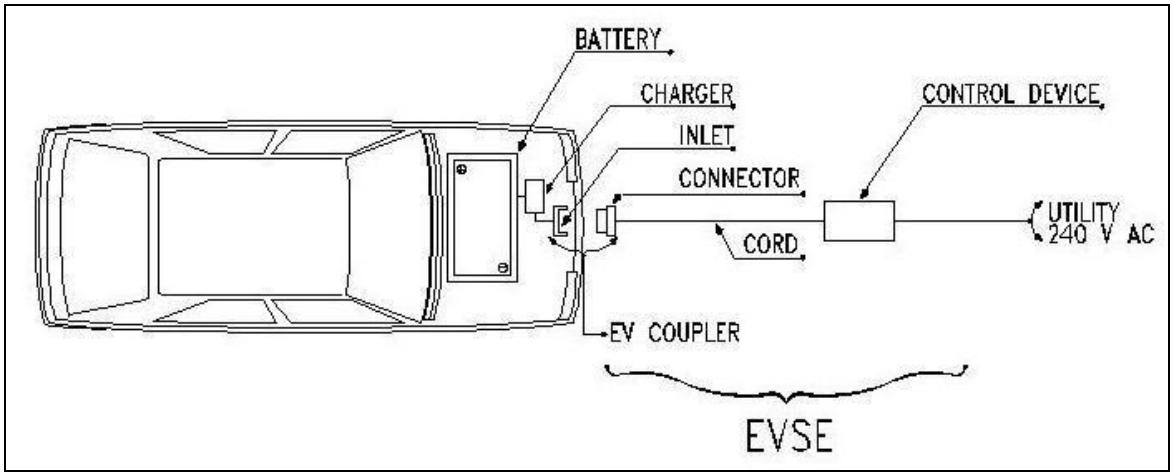

Figure 3-1 Level 2 Charging Diagram

Power is delivered to the EV's onboard battery through the EV inlet to the charger. The charger converts Alternating Current (AC) to Direct Current (DC) required to charge the battery. The charger and EV inlet are considered part of the EV. A connector is a device that, by insertion into an EV inlet, establishes an electrical connection to the electric vehicle for the purpose of charging and information exchange. The EV inlet and connector together are referred to as the coupler. The EVSE consists of the connector, cord and interface to utility power. The interface between the EVSE and utility power will be directly "hard-wired" to a control device as illustrated in Figure 3-1 or a plug and receptacle as illustrated in Figure 3-3.

In the 1990's there was no consensus on EV inlet and connector design. Both conductive and inductive types of couplers were designed and in both cases, different designs of each type were provided by automakers. At the present time, however, the Society of Automotive Engineers (SAE) has agreed that all vehicles produced by automakers in the United States will conform to a single design called the J1772 Standard.[2]

While the J1772 Standard will be utilized by all automakers in the United States, it is not necessarily the standard to be used in other countries. It is the subject of a harmonization project with the Canadian Codes. A common connector is also the goal of European, Asian and North American designers.

J1772 Connector **J1772 Inlet (right side)**

Figure 3-2 J1772 Connector and Inlet (Preliminary)

The J1772 Standard EV coupler is designed for 10,000 connections and disconnections with exposure to dust, salt and water; is able to withstand a vehicle driving over it and is corrosion resistant.

The J1772 Standard and National Electrical Code requirements create multiple safety layers for EV components including:

- The EV coupler -
  - must be engineered to prevent inadvertent disconnection.
  - must have a grounded pole that is first to make contact and the last to break contact.
  - must contain an interlock device which prevents vehicle startup while connected.
  - must be unique to electric vehicle charging and cannot be used for other purposes.
- The EV inlet -
  - must be de-energized until it is attached to the EVSE.
  - must de-energize prior to removal of the connector.
- The EVSE -
  - must be tested and approved for use by Underwriters Laboratory (UL), or a similar nationally recognized, independent testing lab.
  - must be able to initiate area ventilation for those specific batteries that may emit potentially explosive gases.
  - must have a charge current interrupting device (CCID) which will shut off the electricity supply if it senses a potential problem that could result in electrical shock to the user.

In addition, when connected, the vehicle charger will communicate with the EVSE to identify the circuit rating (voltage and amperage) and adjust the charge to the battery accordingly. Thus an EVSE that is capable of delivering 20 amps will deliver that current even though connected to a 40 amp rated circuit.

The J1772 coupler and EV inlet will be used for both Level 1 and 2 charging levels, which are described below.

F. Charging Levels

In 1991 the Infrastructure Working Council (IWC) was formed by the Electric Power Research Institute (EPRI) to establish consensus on several aspects of EV charging. Level 1, Level 2 and DC Fast Charging levels were defined by the IWC along with the corresponding functionality requirements and safety systems. EPRI published a document in 1994 that describes the consensus items of the IWC[3].

Note: For Level 1 and 2, the conversion of the utility AC power to the DC power required for battery charging occurs in the vehicle's on-board charger. In DC Fast Charging, the conversion from AC to DC power typically occurs off-board so that DC power is delivered directly to the vehicle.[4]

- **Level 1 – 120 volt AC**

  The Level 1 method uses a standard 120 volts AC (VAC) branch circuit that is the lowest common voltage level found in both residential and commercial buildings. Typical voltage ratings can be from 110 – 120 volts AC. Typical amp ratings for these receptacles are 15 or 20 amps.

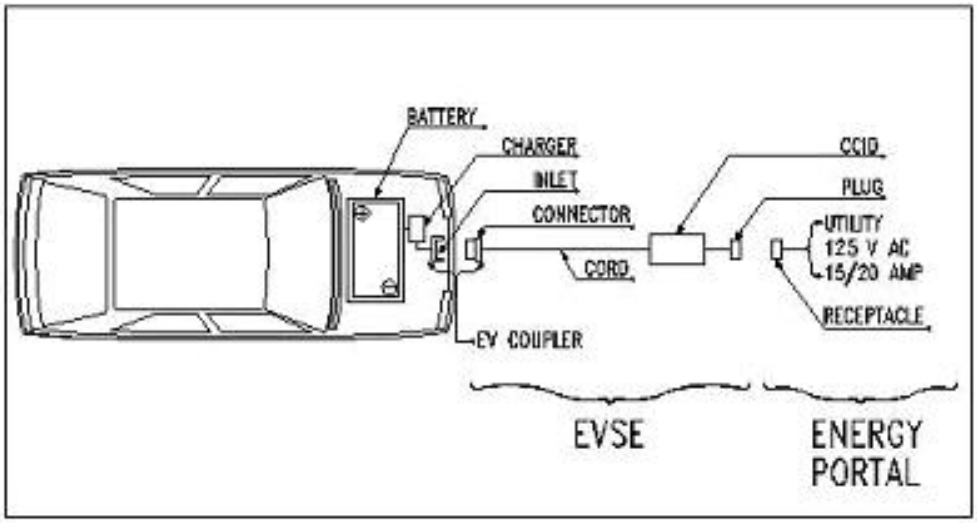

Figure 3-3 Level 1 Charging Diagram

[3] "Electric Vehicle Charging Systems: Volume 2" Report of the Connector and Connecting Station Committee, EPRI, December 1994.
[4] AC DC Fast Charging (delivering high-power AC directly to the vehicle) is defined within the SAE J1772 document, but this approach has not been implemented as yet.

Figure 3-4 Level 1 Cord Set[5]

Level 1 charging typically uses a standard 3 prong electrical outlet (NEMA 5-15R/20R) to connect to premise wiring.

Future EV suppliers will likely provide a Level 1 Cord Set (125 VAC, 15 or 20 amps) with the vehicle. The Cord Set will use a standard 3-prong plug (NEMA 5-15P/20P) with a charge current interrupting device (CCID) located in the power supply cable within 12 inches of the plug. The vehicle connector at the other end of the cord will be the design identified in J1772 Standard. This connector will properly mate with the vehicle inlet also approved by J1772.

Because charge times can be very long at Level 1 (see Table 2-1), many EV owners will be more interested in Level 2 charging at home and in publicly available locations. Some EV manufacturers suggest their Level 1 Cord Set should be used only during unusual circumstances when Level 2 EVSE is not available, such as when parked overnight at a non-owner's home.

Several companies provide kits to convert internal combustion and hybrid vehicles to plug-in vehicles. Many of these conversions use a standard 3 prong electrical plug and outlet to provide Level 1 charging of their vehicles. With the standardization of EVs on the J1772 Standard and the higher level of safety afforded by a J1772 compliant charging station, existing vehicles will need to be retrofitted to accommodate a J1772 inlet in order to take advantage of the deployment of EVSE infrastructure.

- **Level 2 – 240 volt AC**

Level 2 is typically described as the "primary" and "preferred" method for the EVSE both for private and publicly available facilities and specifies a single phase branch circuit with typical voltage ratings from 220 – 240 volts AC. The J1772 approved connector allows for current as high as 80 amps AC (100 amp rated circuit). However, current levels that high are rare and a more typical rating would be 40 amps AC which allows a maximum current of 32 amps. This provides approximately 7.7 kW with a 240 VAC circuit.

---

[5] Conceptual Design for Chevy Volt, *Electrifying the Nation, PHEV Summit*, Tony Posawatz, January 2009

The higher voltage of Level 2 allows for a much faster battery charge. Because of the higher voltage, Level 2 has a higher level of safety requirements than Level 1 under the National Electric Code including the requirement that the connector and cord be hardwired to the control device and premise wiring as illustrated in Figures 3-1 and 3-5.

Figure 3-5 Level 2 Charging

.

- **Level 3 Charging (DC Fast Charging)**

Level 3 Charging, or more correctly "DC Fast Charging" is for commercial and public applications and is intended to perform in a manner similar to a commercial gasoline service station in that recharge is rapid. Typically, DC Fast Charging would provide a 50% recharge in 10 to 15 minutes. DC Fast Charging typically uses an off-board charger to provide the AC to DC conversion. The vehicle's on-board battery management system controls the off-board charger to deliver DC directly to the battery.

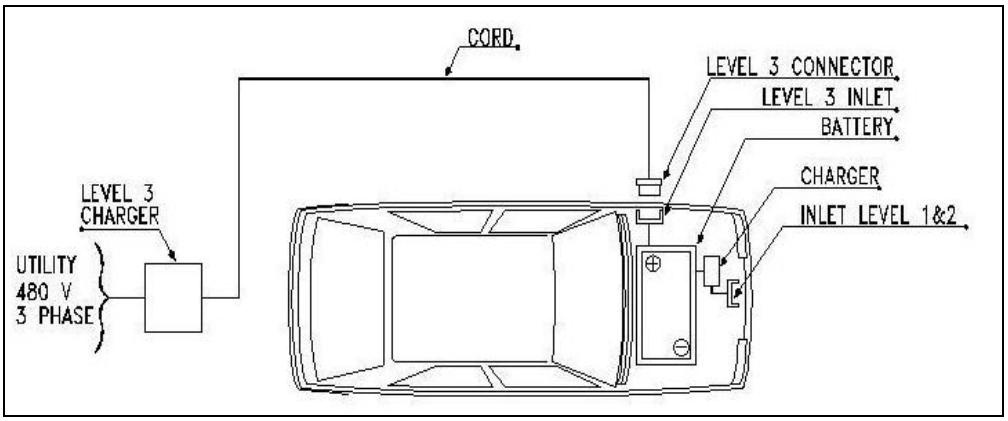

Figure 3-6 DC Fast Charging

This off-board charger is serviced by a three phase circuit at 208, 480 or 600VAC. The SAE standards committee is working on a DC Fast Charging connector, but has placed the highest priority in getting the Level 1 & 2

connector approved first. The DC Fast Charger connector standard is expected to be approved in 2010.

eTec will be utilizing DC Fast Charging equipment in infrastructure developed in 2010.

DC Fast Charging was accomplished by eTec for the Chrysler EPIC in the 1990s and for industrial applications since 1998. Similar, though smaller, equipment will be used for the coming generation of EVs.

Figure 3-7 Chrysler EPIC DC Fast Charging (90kW) circa 1997

Note: Although not as common, a vehicle manufacturer may choose not to incorporate an on-board charger for Levels 1 and 2, and utilize an off-board DC charger for all power levels. In this case, the electric vehicle would only have a DC charge port. Another potential configuration that may be found, particularly with commercial vehicles, is providing 3-phase power directly to the vehicle. This configuration requires dedicated charging equipment that will be non-compatible with typical publicly available infrastructure.

G. Level 1 versus Level 2 Considerations

For a BEV (and some PHEV owners who choose the utility time of use rates), the preferred method of residential charging will be Level 2 (240VAC/single phase power) in order to provide the EV owner a reasonable charge time and to also allow the local utility the ability to shift load as necessary while not impacting the customer's desire to obtain a full charge by morning. For other PHEV owners, a dedicated Level 1 circuit may adequately meet the owner's charging needs.

BEV owners who have the opportunity for Level 2 charging at work or in public areas may find the vehicle battery remains at a higher charge and thus home charging time is not a concern and Level 1 will suffice. See Figure 2-1 for relative battery sizes and estimated recharge times.

H. General Requirements

This section identifies general requirements of EVSE.

- **Certification:** EVSE will meet the appropriate codes and standards, and will be certified and so marked by a Nationally Recognized Testing Laboratory (e.g., Underwriters Laboratories). Owners should be cautioned against using equipment that has not been certified for EV use.
- **Cord Length:** The EVSE will provide a maximum of 25 feet of flexibility from the wall location to the EV Inlet. This figure was obtained by taking the typical 15 foot car length to the 7 foot car width plus 3 feet to the EVSE permanent location. The EV Inlet location on the EVs will vary by manufacturer; however, this standard length should be sufficient to reach from a reasonably positioned EVSE to the Inlet.
- **Tripping hazard:** An extended EV cord may present a tripping hazard so the EVSE should be located in an area of minimum pedestrian traffic. An alternative would be to consider installation of an overhead support or trolley system to allow the cord to hang above the vehicle in the location of the EV inlet.
- **Ventilation Requirements:** If there are ventilation requirements, the EVSE will be required to energize a properly sized ventilation system. Such a requirement is expected to be rare since automobile manufacturers are expected to use non-gassing batteries. Some EV owners who convert their own vehicles to electric or purchase conversions vehicles may use gassing batteries. The approved EVSE will communicate with the vehicle and if ventilation is required but no ventilation system exists, the EVSE will not charge the vehicle. In multi-family or parking garage situations that may already have ventilation systems for exhaust of normal vehicle emissions, such a system would be expected to be sufficient. However, calculations should verify this result. It may also be impractical to wire the charger to the ventilation controls or costly to run the system for a single vehicle charging. In these cases, it may be prudent to identify that the chargers are intended for non-gassing batteries only.
- **Energized Equipment:** Unless de-energized by the local disconnect, the EVSE is considered electrically energized equipment. Because it operates above 50 volts, Part 19 Electrical Safety of the Occupational Health and Safety (OHS) Regulation requires guarding of live parts. EVSE may be positioned in a way that requires a physical barrier for its protection. Wheel stops are recommended to prevent a vehicle from contacting the EVSE. They also help position the EV for the optimum location for charging.

Figure 3-8 Wheel Stop[6]

Figure 3-9 Garage Wheel Stop[7]

[6] Rubberform Recycled Products LLC, www.rubberform.com

- **Shortest Run:** In addition to the above requirements, the lowest cost installation generally is the location closest to the electrical supply breaker because it minimizes the conduit run to the charger.
- **Ergonomics/Ease of Use:** Most EV owners will find it most convenient to have the EVSE located near the EV inlet. In some cases, it may be desirable to back into the garage which helps reduce the tripping hazard while at the same time reduces the electrical circuit run to the EVSE.

---

[7] ProPark Garage Wheel Stop, www.organizeit.com

4. Charging Scenarios

A. Single Attached/Detached Garages

- **Power Requirements:**

Level 1: Dedicated branch circuit with NEMA 5-15R or 5-20R Receptacle.

Level 2: Dedicated branch circuit hardwired to a permanently mounted EVSE with the following specifications: 240VAC/Single Phase, 4-wire (2 Hot, GND, and Neutral), 40Amp Breaker.

- **Cost Estimates**

$2,000 - $2,500 for a generic installation. Costs will vary based on length of the circuit run, electrical panel upgrades, and other factors.

- **Level 2 Notes:**

1. The breaker size recommended will meet the requirements of most all BEVs and PHEVs. Some PHEVs with small battery packs (See Table 3.1) may only require a 20 or 30Amp breaker for their recommended EVSE in which case the breaker can be easily changed.
2. The Neutral may not be required by some EVSE but since it is inexpensive to include and may be required at some point in the future if a different vehicle is purchased it is recommended.
3. For new construction, bring the circuit to a dual gang box with a cover plate for future installation of EVSE.
4. For new construction that is incorporating an advanced internet network within the home, an internet connection at the EVSE location would be advisable. For existing homes, the value of providing an internet connection at the EVSE location is unknown at this time and is left up to the individual homeowner. It is likely that wireless methods will be available where a hard connection is not available.
5. Many Level 2 EVSE suppliers will provide controls in the EVSE to control charging to programmable times to take advantage of off-peak power pricing. If not, home owners may desire to install a timer device in this circuit to control charging times.

- **Siting Requirements**

An indoor rated EVSE is acceptable for an enclosed garage. The EV owner will likely prefer a particular location for the EV. However, the EV should be positioned so that the above general requirements are considered. This often means the EV will be the furthest away from the residence entry into the garage.

The installation of the EVSE at the front of the vehicle may be acceptable unless the cord becomes a tripping hazard. Often the EVSE will be placed on an exterior wall to shorten the distance from the electrical box and at the same time positioning the EVSE out of the way.

If the EVSE is to be installed after the EV has been purchased, the location of the EV inlet will play a part in the location of the EVSE. It is best to keep the EVSE as close to the inlet as possible to minimize the cord splayed on the floor. If the branch circuit is installed prior to the EV purchase, the garage junction box should be on the wall closest to the utility service connection consistent with the general requirements above. Typical locations are shown in the figure below.

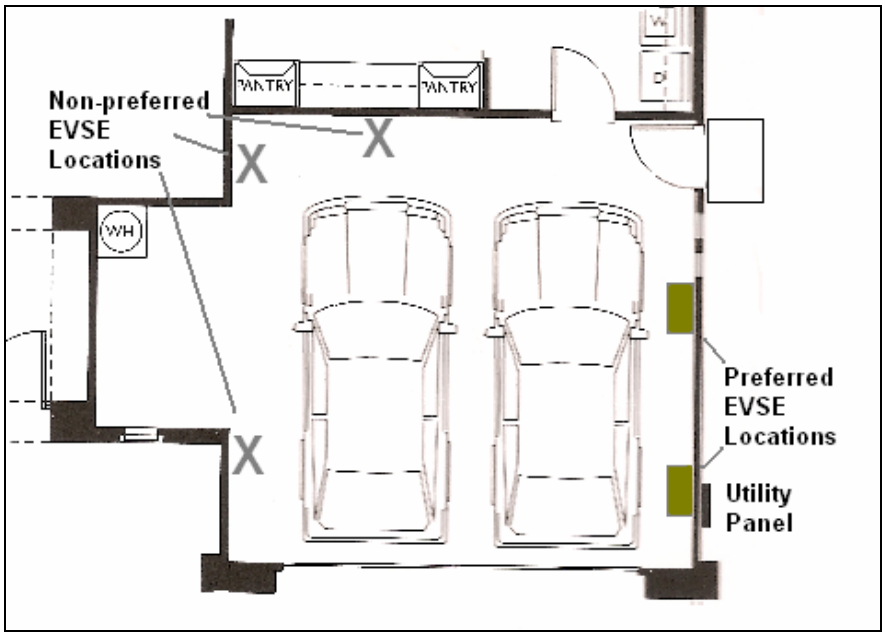

Figure 4-1 Double Garage Location for EVSE

In the above figure, the best location would be for the EV on the right. The non-preferred EVSE locations are in typical walking areas and could present a tripping hazard. In addition, these are further away from the utility panel. An option for the EV owner's desire to place the EVSE in these locations could be accommodated by using an overhead support of the charge cable and connector. If the EV inlet is on the left side of the vehicle, the owner could consider backing into the garage.

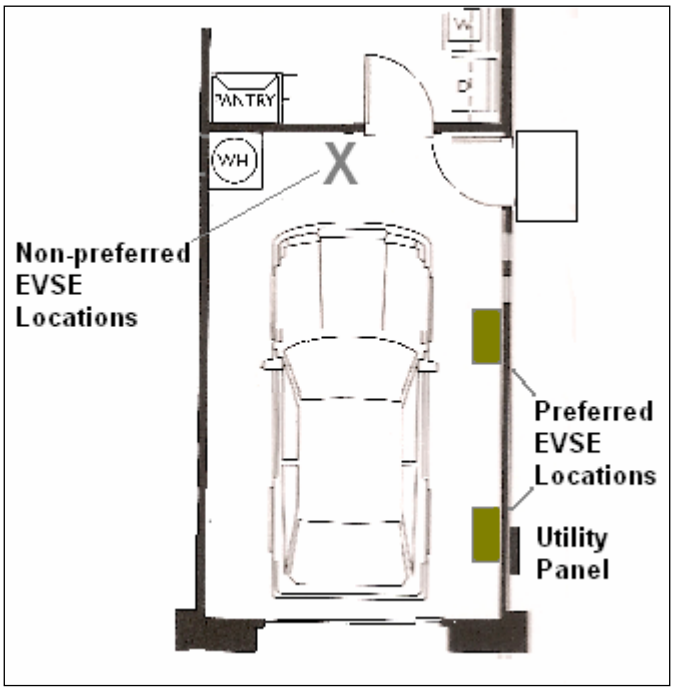

Figure 4-2 Typical Single Garage Location for EVSE

In the single garage environment, most locations will be acceptable for locating the EVSE except perhaps at the head of the vehicle because of tripping concerns. The preferred locations are selected because of proximity to the utility panel. Again, consideration of overhead support of the EVSE cable would allow EVSE installation where the owner prefers.

The National Electrical Code provides additional requirements should the EVSE be located in a hazardous area. The other materials stored in the garage should also be considered when locating the EVSE if they are determined to be of a hazardous nature.

Detached garages will include additional considerations in routing the electrical supply to the garage. Landscaping will be disrupted during the installation process. This may be of great significant to the owner and should be thoroughly planned in advance.

- **Installation Process**

Installation of the EVSE in a residential garage typically consists of installing a dedicated branch circuit from an existing house distribution panel to an EV outlet receptacle (125 VAC, 15/20 A) in the case of Level 1 charging or an EVSE (operating at 240 VAC, 40 A) for Level 2 charging. If the garage is built with the conduit or raceway already installed from the panel to the garage, the task is greatly simplified.

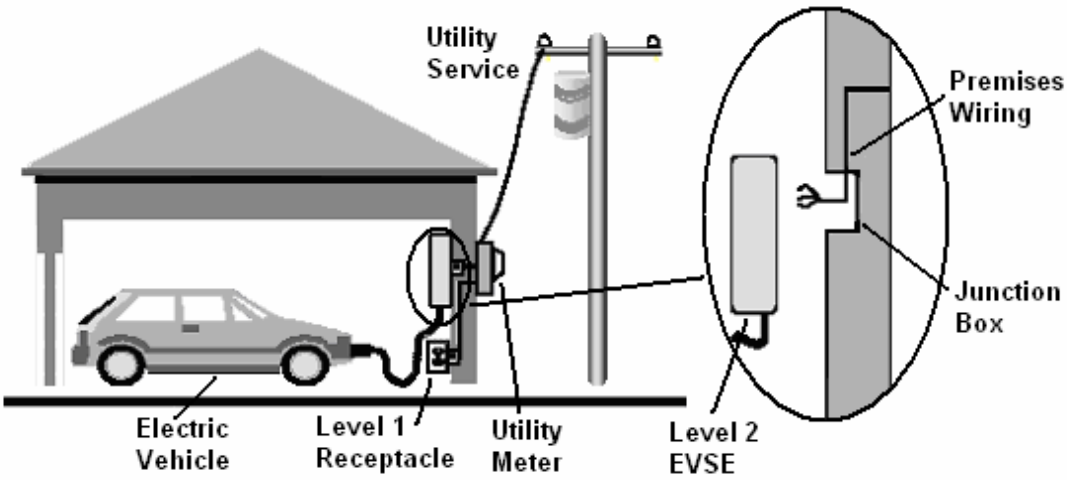

Figure 4-3 Typical Level 1 and Level 2 Installations for a Residential Garage

The specific steps involved in this process are shown in the flowchart below. In general, they include:

- Consultation with the EV dealer to determine whether Level 1 or Level 2 EVSE is required, whether ventilation will be required and what EVSE to purchase
- Consultation with the electric utility to determine rate structure, requirements for a special or second meter
- Consultation with a licensed electrical contractor to plan the installation effort including location of EVSE, routing of raceway from utility service panel to EVSE, Level 1 or Level 2 requirements, ventilation requirements, adequacy of current utility service, and obtain installation quote
- Submission of required permitting documents and plans
- Completion of EVSE installation and utility service components, if required
- Inspection of final installation

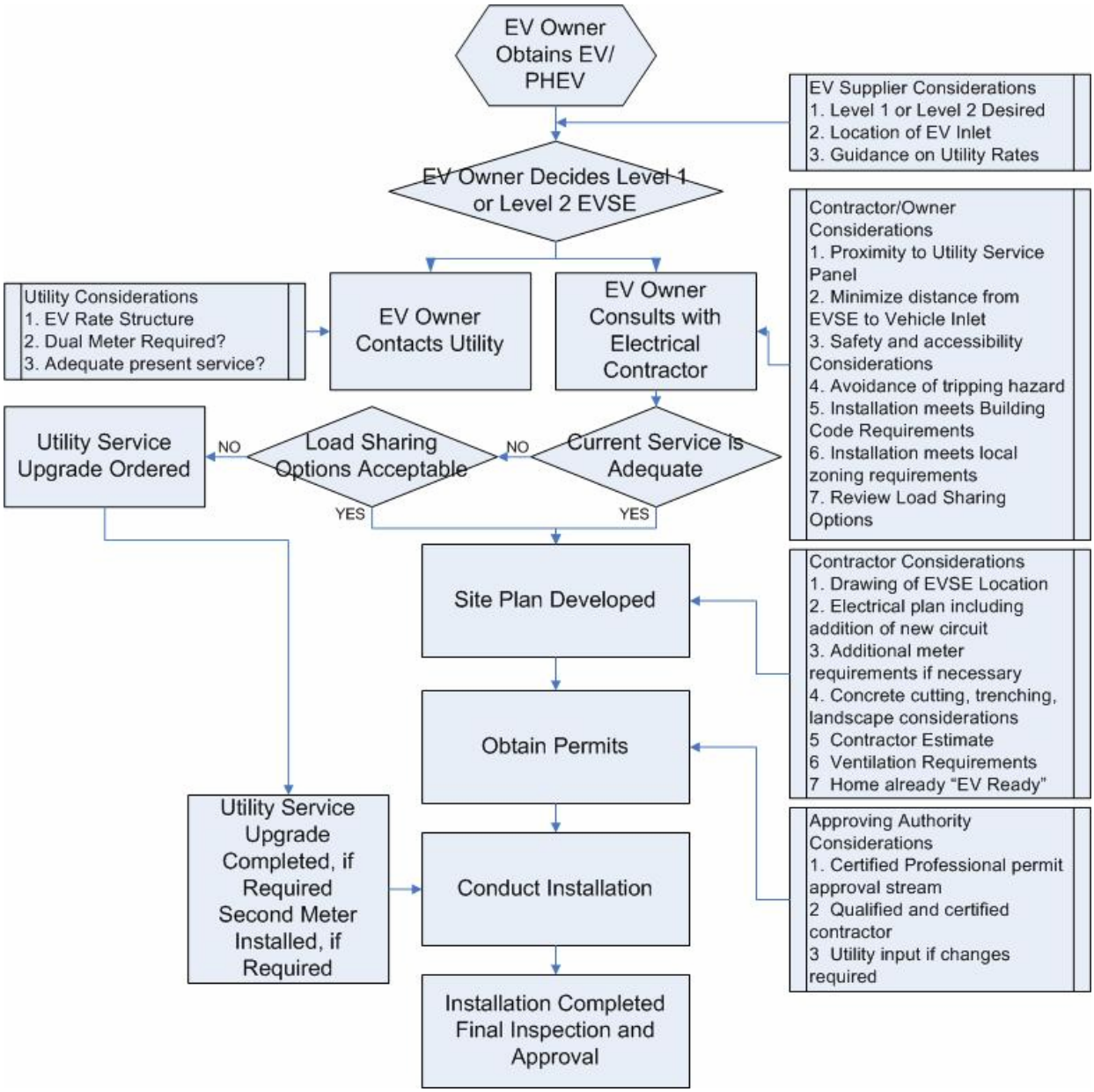

Figure 4-4 Installation Process for a Residential Garage/Car Port

If the garage has a pre-existing raceway, a 125 VAC, 15/20 amp circuit or a 240 VAC, 40 amp circuits can be installed.

Although a new home may already have the raceway installed, a permit for the service is required. Increasingly, standards are directing that a raceway for an electric vehicle will be included in new home construction. The conductors may or may not be included. If included, consideration should be given to sizing the conductors for the 240 VAC, 40 amp circuits required for Level 2 charging but installing the 120 VAC, 20 amps Level 1 breaker and

receptacle. The home owner would have a functional circuit that could be upgraded easily to Level 2 if desired.

Contact a local electrical contractor to evaluate the options of adding a new service or upgrading the existing service, as utility fees may apply.

B. Car Port

- **Power Requirements:**

Power requirements are the same as Garage scenario above.

- **Cost Estimates**

$2,000 - $2,500 for a generic installation. Costs will vary based on length of the circuit run, electrical panel upgrades, and other factors

- **Siting Requirements**

The siting requirements for the car port will include those identified above for the garage. Some owners may elect to place the EVSE in the garage but charge a vehicle outdoors. This is similar to the carport requirements. A carport is considered an outdoor area and the EVSE should be properly designed for exterior use. Consideration must be given to precipitation and temperature extremes. In geographic areas that experience high precipitation, pooling of water in the carport or driveway may be a concern. While the EVSE is safe, owners may have a concern about standing in pooled water while connecting the EVSE. Consultation with the owner will be required when locating the EVSE.

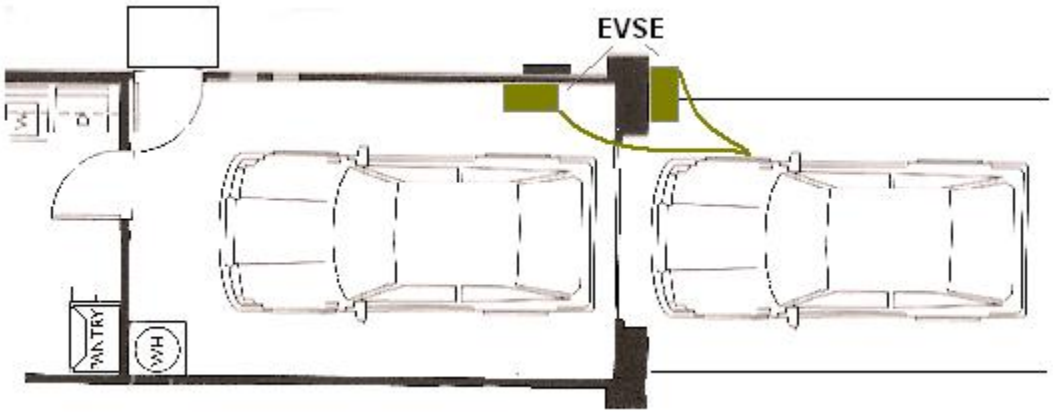

Figure 4-5 Installation Considerations for Outdoor Parking

Freezing temperatures can create an issue for cords freezing to the parking surface and cord support should be considered. Adequate lighting is an additional consideration, along with mitigating efforts to prevent vandalism as noted in Section 5 below. The installation process is similar to the garage process outlined above.

- **"Consultation with Landlord or HOA"**

An installation in a multi-family location may involve a more lengthy approval process for zoning considerations. The local zoning requirements may require a public hearing or pre-approval by a Design Review Committee.

C. Multi-Family Dwellings

- **Power Requirements:**

Power requirements are the same as Garage scenario above.

- **Cost Estimates**

Costs will vary based on length of the circuit run, trenching, electrical panel upgrades, and other factors.

- **Siting Requirements**

In multi-family dwellings, there will be additional considerations because the apartment or condominium owner must also be involved in any siting decisions. It is best that the potential EV owner work through the details identified here prior to purchasing an EV. A site close to the owner's dwelling will be desired but may not be in the best interests of the apartment owner. Special flooding or drainage conditions may apply. Lighting and vandalism concerns will exist. Payment methods for the electrical usage will need to be identified. There may be insurance and liability questions as well as damages if vandalized. All the concerns should be discussed prior to the EV purchase.

Should the EV owner later relocate, the electrical installation raceway and panel upgrades, if any, will be retained at the multi-family location. Ownership of the EVSE needs to be identified clearly. If the EV owner takes the EVSE, site restoration may be required. Circuit removal or de-energizing methods should be settled. Discussion with the utility is also required since there may be metering questions or issues to be resolved. In condominiums, the Home Owners Association (HOA) may be involved to approve EV additions.

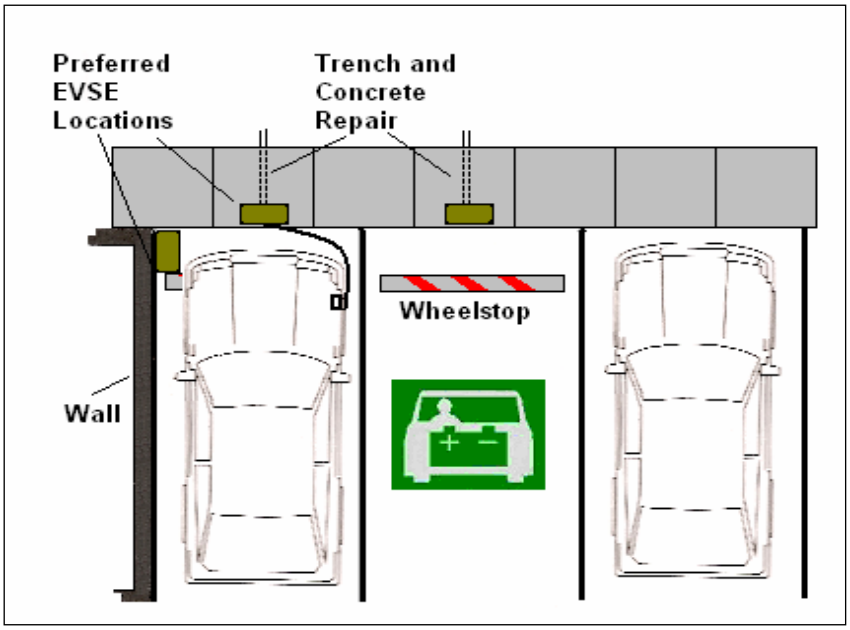

Figure 4-6 Typical EVSE Installation in Multi-Family Lot

In general, the EVSE will need to be outdoor rated unless the location is well protected from the environment. The installation of the EVSE at the front of the vehicle may be the only choice unless an adjacent wall is available. If located at the front of the parking stall, the EVSE should be located on the vehicle side of any walkway to minimize the cord becoming a tripping hazard. The walkway for pedestrians would be on the back side of the EVSE. Because a wheel stop will be installed, consideration should also be given to make sure the EV parking is not in an area of normal pedestrian traffic in order to avoid pedestrians tripping over the wheel stop when no vehicle is present.

Trenching and concrete work and repairs are likely. Consideration must be given to maintaining a safe and secure area around the parking stall to avoid tripping hazards or EVSE interference with other operations.

- **Installation Process**

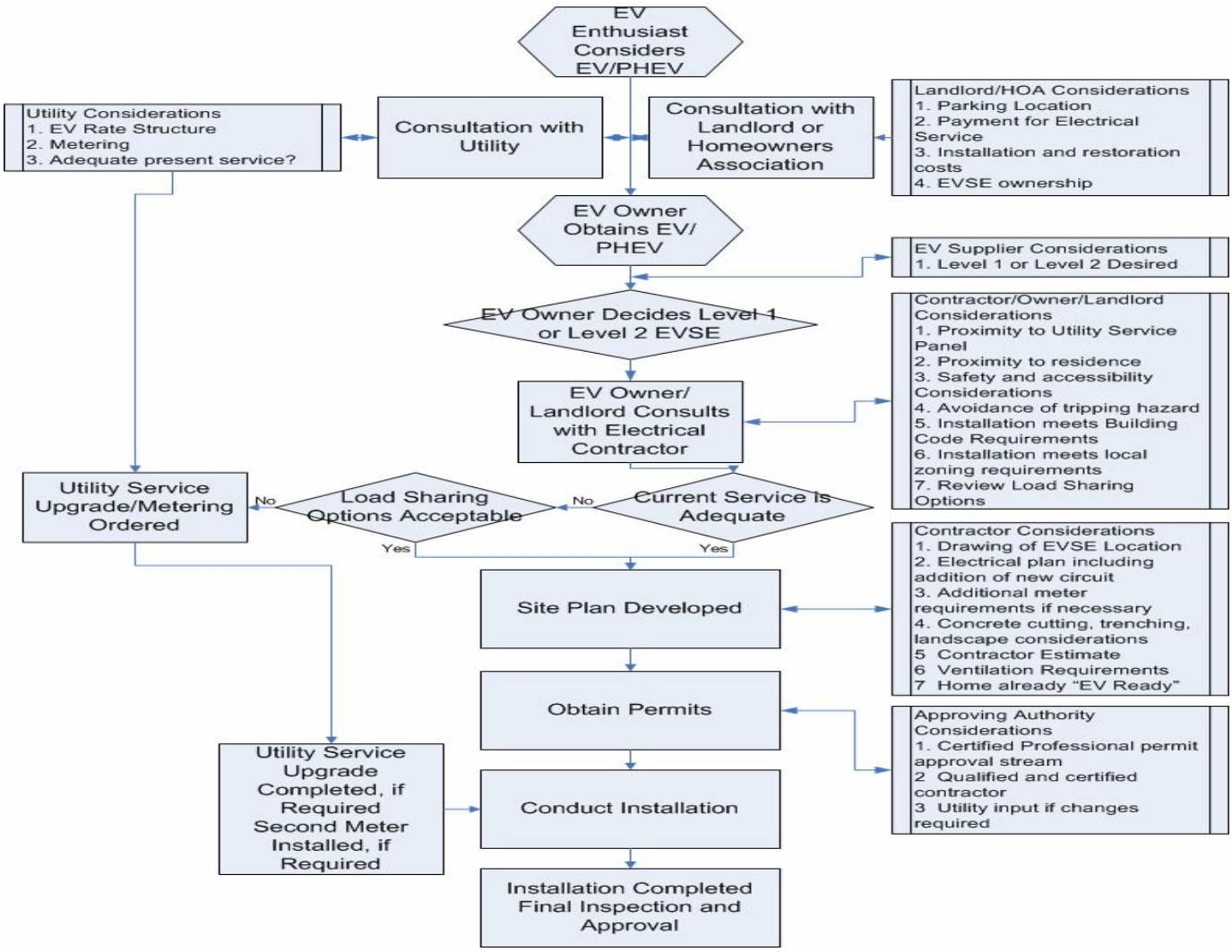

Figure 4-7 Installation Process for Multi-Family

If the parking area has a pre-existing raceway, the wishes of the EV owner and property owner can determine whether this will be a 120 VAC, 15/20 amp circuit or a 240 VAC, 40 amp circuit. This would also require review by the electrical contractor to make sure the service panel is sufficient to support the choice. Although a raceway may have been installed previously, a permit for the service is required.

- **Multiple Parking Stall Installation**

In a new construction or retrofit situation, broad charging infrastructure installation in a multi-residential building will require the services of an electrical consultant to determine the best approach for the situation. For example, the proponent may consider a load control strategy to manage the charging load within the capacity of the electrical service to the building rather than upgrading the service size to accommodate increased building load from electric vehicle charging.

D. Commercial Fleets

- **Power Requirements**

Dedicated branch circuits hardwired to permanently mounted EVSE with the following specifications: 208VAC or 240VAC / Single Phase, 4-wire (2 Hot, GND, Neutral), 40Amp Breaker

Commercial fleet charge stations will likely include multiple charge locations and therefore with new construction the additional will need to be planned for when sizing the main service entrance section (SES). Since it is likely that most of the charging will occur during working hours, for existing buildings, the additional load may require an upgrade or new SES and/or utility supply.

Because of a potentially large electrical load, it is recommended that a network connection is provided in close proximity to the charge stations. This connection may be required for interface with the building energy management system or to implement local utility load control strategies.

- **Cost Estimates**

$40,000 - $50,000 for a generic installation of ten EVSE. Costs will vary based on length of the circuit run, trenching, electrical panel upgrades, and other factors.

- **Siting Requirements**

Commercial fleets make up the highest population of EVs at the present time. Utilities, governmental agencies and other private fleets have been encouraged and are encouraging the private adoption of EVs. A significant amount of planning is required to correctly size the EV parking and charging area. Consideration is given to the current requirements as well as anticipated future requirements. Electrical service requirements will be much higher than residential or multi-family installations and can have a significant impact on electrical usage and on the utility. For that reason, electrical utility planners need to be involved early on in the fleet planning process.

The individual home owner will be interested in charging his/her vehicle off-peak. That interest will be greater for the fleet manager.

Flood prone area restrictions must be considered as well as issues of standing water. Often large parking lots will have low spots where water accumulates. Although the Level 2 EVSE contains the proper protection device, employees will not be comfortable operating the EVSE in standing water.

Installation of the EVSE in a commercial facility typically consists of installing new dedicated branch circuits from the central meter distribution panel to a Level 2 EVSE. In a commercial fleet, there are typically many such EVSE units in adjacent parking stalls. Proximity to the electrical service is an important factor in locating this parking area. The length of the circuit run and the quantity will have a significant impact on the cost.

Because these EVSE units are in a designated area, the potential for pedestrian traffic is less and more consideration can be given for the most economical installation methods. In addition, the commercial nature of the site will allow greater overall security, such as fences and gates, so that the threat of vandalism is minimized.

Fleet managers must also be aware of other equipment to be stored in the vicinity of the EVSE. It is important that a hazardous environment does not already exist in the area planned.

Fleet manager interest and priorities can also stimulate the development of DC Fast Charging. The higher recharge rate means a shorter turn-around for each vehicle and maximizes on-road time. The 480/600 VAC is generally available in commercial facilities.

Figure 4-8 Level 2 Commercial EV Charging Location

- **Installation Process**

The installation process is similar to the processes shown above except that much more detailed planning is involved prior to the owner's final decision and obtaining permits.

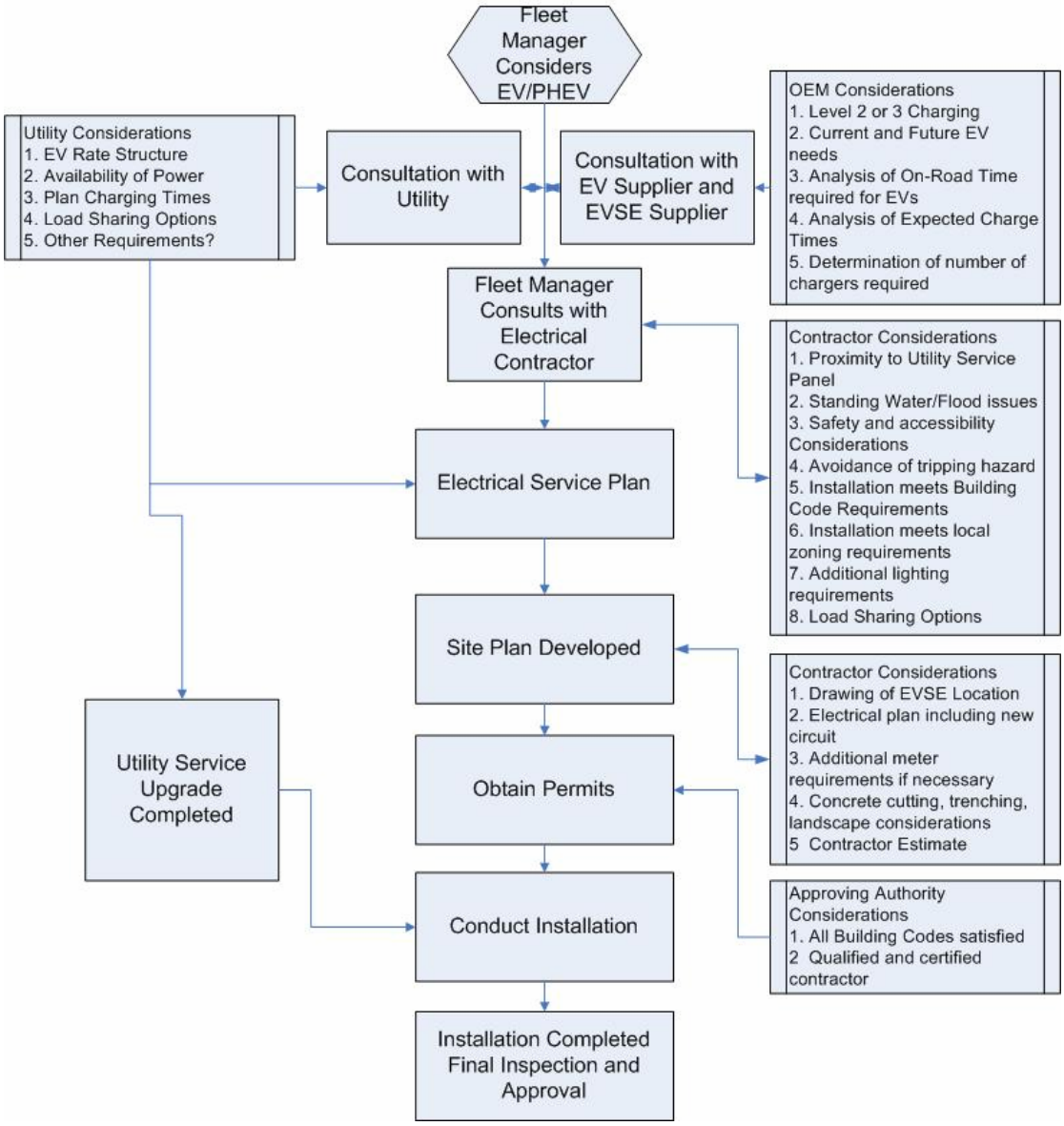

Figure 4-9 Installation Process for Commercial Fleet Operations

D. Publicly Available Charging Stations

A significant factor in the consumer adoption of EVs will be the ability to extend the range of battery-only power. This can be accomplished by the wise installation of publicly available charging locations. The EV Micro-Climate© program focuses on this area because of its importance.

Publicly available charging may employ a mix of Level 1, 2 and 3 DC Fast charging stations, however, the charge return generated by a dedicated Level 1 charging station will be minimal for a BEV and its use is not recommended nor included in the EV Micro-Climate©. The recommended configuration for a publicly available Level 2 charging station is one equipped with J1772 connector. This will accommodate all vehicles equipped with a J1772 inlet including PHEVs and other EVs that require lower kW charging than a BEV.

Publicly available charging may be served by either Public or Commercial charging stations. Public charging stations are those EVSE installed on public owned property such as city or county property. Curbside chargers are a typical example. Commercial charging stations are those EVSE installed on private or commercial property such as retail locations.

The determination of publicly available Level 2 EVSE charging sites should focus on locations where the EV owner will be parked for a significant period of time i.e. 1 – 3 hours. An appreciable recharge can occur during this time period. Locations where owners can be expected to park for this time include restaurants, theaters, shopping malls, governmental facilities, hotels, amusement parks, public parks, sports venues, arts productions, museums, libraries, outlet malls, airports visitor lots, major retail outlets, among many other choices.

Businesses, such as electric utilities or those that wish to promote EV usage will install public charging near their building entrance in highly visible areas even though EV owner stay times may be shorter. As noted above, these stations should be Level 2.

The determination of publicly available DC Fast Charging EVSE charging sites should focus on locations where the EV owner will be parked for a relatively short period of time, i.e. 15 minutes, where an appreciable recharge can occur during this time period. Locations where owners can be expected to park for this time include convenience stores, coffee houses, service stations, drug stores, and fast food restaurants among many other choices. For DC Fast Charging, the availability of 480/600 VAC will be a consideration.

Publicly available charge stations will vary greatly in design and requirements. They also include a number of other requirements not found in residential and fleet applications such as signage and Point-of-Sale systems, as described in section 5.

- **LEED Building Certifications**

A driving force in the design, construction and operation of facilities is the Leadership in Energy and Environmental Design (LEED) Green Building Rating System. It was developed by the U.S. Green Building Council and it provides standards for environmentally sustainable construction and operation of facilities. It requires a study of the CO_2 emissions by company personnel and encourages, through monetary incentives or preferred parking, the use of alternative fuel vehicles. It provides credits for installing EV charging stations and suggests certain percentages of parking be devoted to alternative fuel vehicles. These locations will apply to employees as well as public using the facility. Companies interested in being LEED certified are excellent sites for publicly available charging stations.

- **Power Requirements**

Level 2: Dedicated branch circuits hardwired to permanently mounted EVSE with the following specifications: 208VAC or 240VAC / Single Phase, 4-wire (2 Hot, GND, Neutral), 40Amp Breaker

DC Fast Charging: Dedicated branch circuit hardwired to permanently mounted charger supplied with the circuit as specified in the installation manual. DC Fast Charging chargers rated up to 30kW they may require either 208AVC/3-Phase or 480VAC/3-Phase. For DC Fast Charging chargers greater than 30kW, they will likely require 480VAC/3Phase.

Example Sizes:

1. For 30kW Output Power, typical input power requirements are:

   208VAC/3-Phase, 4-wire (3-Hot, GND), 125 Amp Breaker, -or-

   480VAC/3-Phase, 4-wire (3-Hot, GND), 60 Amp Breaker

2. For 60kW Output Power, typical input power requirement is

   480VAC/3-Phase, 4-wire (3-Hot, GND), 125 Amp Breaker

Communication will likely be desired for any publicly available charge stations, but it is not necessarily required. Wireless methods will most likely be utilized, but if a hard-wire internet connection is available it is generally desired over wireless.

- **Siting Requirements**

Siting requirements for publicly available charging are similar to other stations previously noted but involve many additional considerations. Questions such as ownership, vandalism, payment for use, maintenance, and data collection are addressed in following sections.

Flood prone area restrictions must be considered as well as issues of standing water or high precipitation. As noted above, people will not be comfortable operating the EVSE in standing water. Unlike Fleet use, the area designated for Public use should be in a preferred parking area. Also unlike Fleet use, the area is public and the threat for vandalism will be greater. This will likely be in a high pedestrian traffic area so the considerations for placement of the charger to avoid the charge cord or the wheel stop from being tripping hazards is very important.

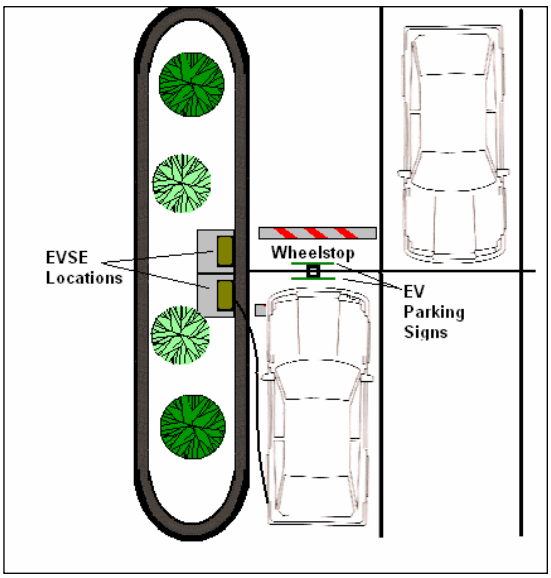

Figure 4-10 Example Publicly Available Charging Layout

There are several ways to address the protection of the equipment, shelter, signage and pedestrian safety. The following pictures provide several examples.

Figure 4-11 Publicly Available Charging Examples

Some publicly available charging will be driven by commercial businesses interested in promoting electric vehicle use through personal preference or as part of the LEED certification. They may decide on their own to purchase and install systems or participate in such costs. Other business owners will be receptive to placement of chargers in their parking lots once approached with incentives. Other public, private and governmental agencies will install EVSE out of support for EVs. Mapping these selected locations will provide input to an overall municipal plan identifying the ideal sites to ensure wide coverage of publicly available charging.

Publicly available sites will also invoke accessibility requirements and the quantity of parking stalls with EVSE that are accessible. This is further discussed in Section 5.

Lighting and shelter are extremely important in public sites. The EV owner must feel safe when parking at night in addition to being able to read directions and properly locate the EV connector and insert into the EV inlet. An indoor stall in a parking structure or a sheltered stall in the outdoor parking lot provides additional convenience for the EV owner.

Installation of the EVSE in a public area typically consists of installing new dedicated branch circuits from the central meter distribution panel to a Level 2 EVSE. There will likely be many such EVSE units in adjacent parking stalls. Proximity to the electrical service is an important factor in locating this parking area. The length of the circuit run and the quantity will have a significant impact on the cost.

The cost of providing power to the EV parking location must be balanced with the convenience of the parking location to the facilities being visited by the EV owner. It may be more convenient for the EV owner for a large shopping mall to have two or three EV parking areas rather than one large area although the cost for the three will be greater than the cost for the one.

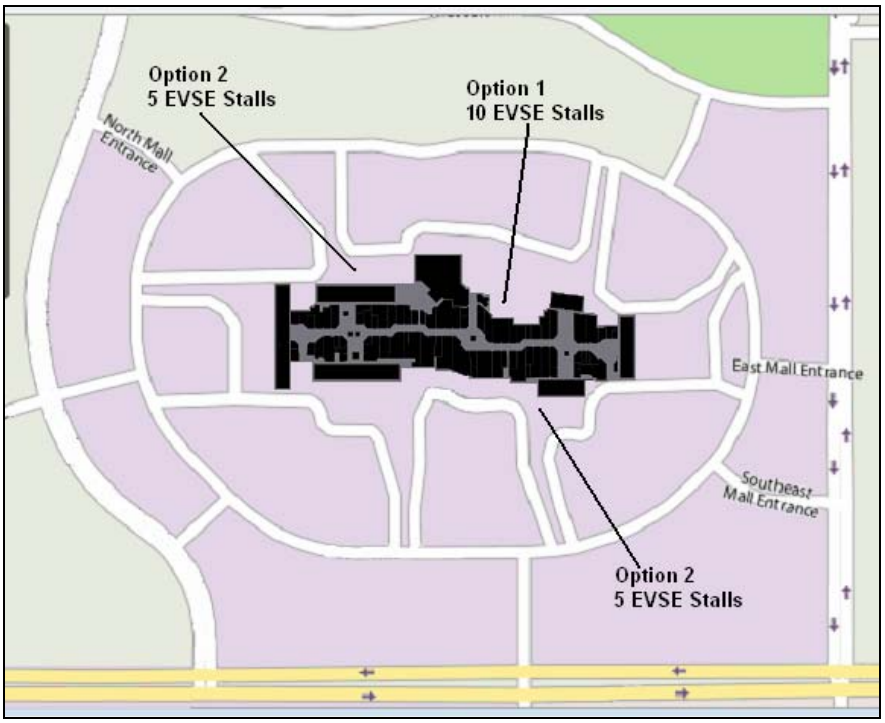

Figure 4-12 Example Shopping Mall EVSE Parking

The local area aesthetics are also important and they may require the installation of landscaping or screening walls to shield the electrical transformer, panel or other equipment from the public eye.

Trouble reporting can be very important in public charging areas. Each publicly available charging area should be equipped with a method whereby the EV user can notify the equipment owner of trouble found with the equipment. Public satisfaction will suffer if stations are found to be out of service or not kept in an appealing condition. This may be a normal business call number or a service call number which monitors many publicly available charging locations. This will require a communications line. At a minimum, a sign may be posted at the EVSE location directing comments to a particular office or store location.

Figure 4-13 Indoor Charging

Figure 4-14 Outdoor Charging

- **Installation Process**

The installation process is similar to the processes shown above except that a lot more detailed planning is required prior to submittal of plans for obtaining permits.

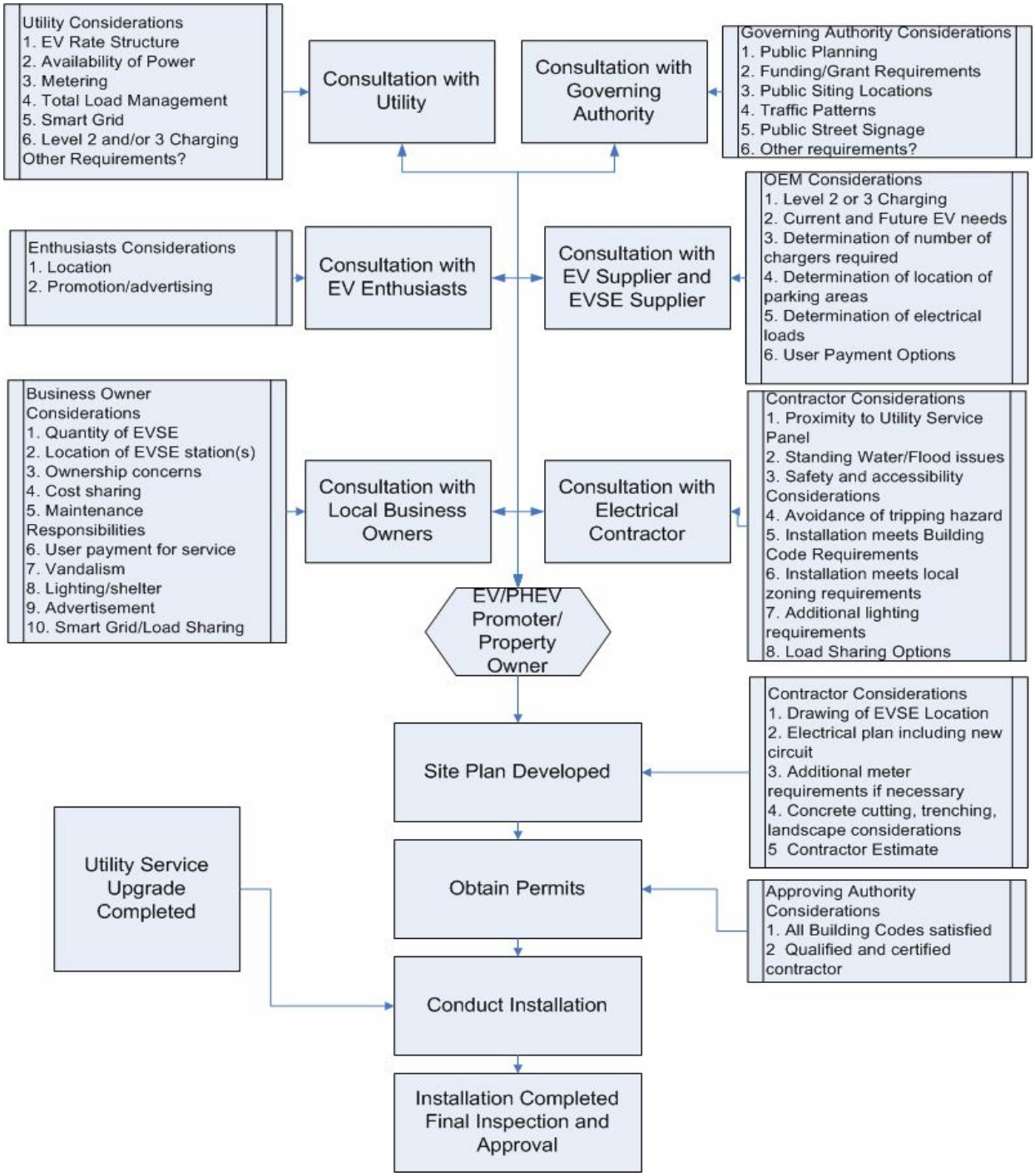

Figure 4-15 Installation Flowchart for Public Charging

The quality of the advance planning will determine the quality of the final installation and ultimately, the EV owner's acceptance and satisfaction.

- **Curbside Charging**

Curbside Charging is not necessarily associated with a commercial business. Generally speaking, these areas are owned by the municipality rather than private interests. Many of the same considerations noted above apply.

Figure 4-16 Curbside Charging

5. Additional Charging Considerations

A. Signage

In addition to the signs and warnings required by NEC identified in Section 6, information signage is recommended for publicly available charging stations. Signage has two purposes: keeping non-EV vehicles from parking in charging station spots and assisting EV drivers locate charging stations.

Figure 5-1 No Parking Except for Electric Vehicles Sign

Previous experience has shown that signs that follow the red on white standards for No Parking work best to keep non-EV drivers from occupying charging station spots. The Manual on Uniform Traffic Control (MUTCD) defines the standards used by road managers nationwide to install and maintain traffic control devices on all public streets, highways and private roads open to the public. The examples in Figure 5-1 follow MUTCD standards. Sites that have friendly green or blue EV Parking or EV Parking Only signs are not recognized by the public. If the signage is blue in color, it can be mistaken for an accessible location. Green signs are often mistaken for short-term parking signs.

Figure 5-2 Wayfinding Sign

Widespread adoption of EVs will include maps or websites identifying charging locations. It is helpful to post EV parking area signs on adjacent streets and access points directing EV drivers to the charging locations. A wide variety symbols for charging station wayfinding were developed in the mid 1990s. A number of designs have been suggested to update these symbols. Stakeholders have identified criteria including being able to symbolize the next generation of EVs that do not use lead acid batteries and modern charging stations that do not use a two prong plug emanating from the vehicle or the charging station. Ideally, a common design will be used from federal and state highways to local streets to above the charging stations.

B. Lighting and Shelter

For commercial, apartment, condo and fleet charging stations, adequate lighting is recommended for safety and convenience. Shelter is not typically required for outdoor rated equipment. For geographic locations that have significant rainfall or snow, providing shelter over the charging equipment will provide added convenience to potential EV users. Locations within parking garages or private garages that are well protected from the environment may utilize EVSE that is not specifically outdoor rated.

Lighting should be sufficient to easily read associated signs, instructions, or controls on the EVSE and provide sufficient lighting around the vehicle for all possible EV Inlet locations.

Figure 5-3 Public Charging with Shelter and Lighting

In residential garages or carports, lighting is also important so that pedestrians can avoid tripping over extended charge cords while the EV is charging.

C. Accessibility Recommendations

Current state and federal regulations do not provide design criteria that specifically address EV parking and charging; however, certain design requirements were added to the National Electric Code for accessible EVSE and some municipalities provide guidance for accessible EV parking locations. New standards may be developed; therefore, recommendations herein constitute the best guidance to date.

There are two situations to consider when establishing charging stations and accommodating persons with disabilities: where the primary purpose is EV charging and where the primary purpose is accessible parking.

EV Charging is the Primary Purpose

When EV charging stations are provided at a site in addition to regular parking, EV charging is considered the primary purpose. Parking spaces with accessible EV charging stations are not reserved exclusively for the use of persons with disabilities and a disabled parking pass would not be required.

To enable persons with disabilities to have access to a charging station, EV connectors should be stored or located within accessible reach ranges. In addition, the charging station should be on an accessible route between the charging station and around the vehicle.

Accessible EV charging stations should be provided according to Table 5-1.

Table 5-1 Accessible Charging Station Recommendations

EV Charging Stations	Accessible to EV Charging Stations
1 – 50	1
51 – 100	2

The accessible EV charging stations should be located in close proximity to major buildings and site facilities; however, the EV charging stations need not be located immediately adjacent to the buildings and other facilities like traditional ADA parking since EV charging, not parking, is considered the primary purpose.

Accessible Parking is the Primary Purpose

If charging stations are placed in existing accessible parking spaces, then the primary use of that space must be accessible parking; that is, a disabled parking pass would be required to park in this EV charging space.

The federal Americans with Disabilities Act, Revised Code of Arizona and Arizona Administrative Code identify requirements for location, design and number of parking spaces for persons with disabilities.

Note that it is important that the placement of the charging station in an existing accessible parking space should allow adequate space (minimum of 36 inches) for a wheelchair to pass the vehicle wheel stop.

D. Safety Issues related to Indoor Charging

The possibility of invoking the ventilation requirements or hazardous environment requirements of the NEC exists when installing indoor charging. When the EVSE connector makes contact with the EV inlet, the pilot signal from the vehicle will identify whether that the battery requires ventilation. While most BEV and PHEV batteries do not require ventilation systems, some batteries, such as lead acid or zinc air, emit hydrogen gas when charged. Most vehicle manufacturers will identify clearly that their batteries do or do not require ventilation. Without adequate ventilation, the hydrogen gas concentration may increase to an explosive condition. The Lower Flammability Limit of hydrogen in air is 4% mixture by volume. Locations are hazardous when 25% of the limit is reached or 1% mixture by volume. The EVSE contains controls to turn on the ventilation system when required and also to stop charging should that ventilation system fail.

Recognizing that hydrogen is lighter than the air mixture, concentrations would exist near the ceiling. The ventilation system should take this into account to exhaust high and replenish lower.

Indoor charging can also provide a challenge with respect to lighting, tight access and other material storage. Often areas of an enclosed garage can be poorly lighted and when combined with the tight access around the vehicle and other equipment stored in and around the vehicle parking stall, the possibility of personal injury from tripping exists.

E. Installations Located in Flood Zones

Permits for construction of facilities, including EV charging stations, include reviews to determine whether the site is located in a flood prone area. The Code of Federal Regulations, Title 44 Emergency Management and Assistance, Part 60 Criteria for Land Management and Use includes the following requirement:

> "If a proposed building site is in a flood-prone area, all new construction and substantial improvements shall (i) be designed (or modified) and adequately anchored to prevent flotation, collapse, or lateral movement of the structure resulting from hydrodynamic and hydrostatic loads, including the effects of buoyancy, (ii) be constructed with materials resistant to flood damage, (iii) be constructed by methods and practices that minimize flood damages, and (iv) be constructed with electrical heating, ventilation, plumbing, and air conditioning equipment and other service facilities that are designed and/or located so as to prevent water from entering or accumulating within the components during conditions of flooding."[8]

For EVSE components, the two primary ways to minimize flood damage, prevent water from entering or accumulating and be resistant to flood damages involve elevation and component protection. These measures are required by the National Flood Insurance Program (NFIP).

---

[8] 44CFR60.3(a)(3)

Elevation refers to the location of a component above the Design Flood Elevation (DFE). That is the primary protection for EVSE. All locations approved for EVSE installation should be above the DFE. It may mean that the EVSE is located outside a garage if inside would be below the DFE. It may mean that certain areas of a condominium parking lot would not contain any EVSE if that elevation is not achievable. It may require EVSE charging stations on the third level of a parking garage instead of the first.

Component Protection refers to the implementation of design techniques that protect a component from flood damage when they are located below the DFE.

Wet flood proofing refers to the elimination or minimization of the potential of flood damage by implementing waterproofing techniques designed to keep floodwaters away from utility equipment. In this case, the rest of the structure may receive damage but the EVSE is protected by barriers or other methods.

Dry flood proofing refers to the elimination or minimization of the potential for flood damage by implementing a combination of waterproofing features designed to keep floodwaters completely outside of a structure.[9] If the entire building is protected from flood water, the EVSE is also protected.

F. Point of Sale Options

During the early adoption stage of EV ownership, most owners of publicly available charging stations will absorb the cost of the electricity used since this actual cost is low per use. However, as the public acceptance and ownership of EVs grow, more will favor having the option for point of sale. In most areas, only electric utilities can actually sell electricity so fee for convenience/service will likely be the strategy. Often a credit card transaction fee will well exceed the electricity cost of charging an EV. However, the availability and convenience of charging will be a service the public will desire and purchase. A fee for service can assist the EVSE owner in recovering equipment, installation, service and maintenance costs. Several options for point of sale options exist.

- **Card Readers**

Several types of card readers exist that may be incorporated with the EVSE. Credit/debit card readers would be simple to use and are already widely accepted by the public. The credit/debit card would record a fee for each time the publicly available charging is accessed and based upon the accessibility rather than length of time on charge.

A smartcard is a card that is imbedded with a microprocessor or memory chip and it can more securely store more detailed information than a credit/debit card. The smartcard could be sold as a monthly subscription and embedded with more information about the user. That information could be captured in each transaction and used for data recording as noted in Section H below. The smartcard could be used for a pre-set number of charge opportunities or to bill a credit card number for each time of use.

---

[9] FEMA Publication 348 *Principles and Practices for the Design and Construction of Flood Resistant Building Utility Systems,* November 1999

In both cases, a communication system from the reader to a terminal for off-site approval and data recording will be required. Approval received may then close a contact for power to be supplied to the EVSE. The cost of this system and its integration into the EVSE will be a design consideration.

Figure 5-4 Smartcard Reader[10]

- **Parking Area meters**

People are very familiar with parking meters used in public parking. A simple coin operated meter is an option for EV parking areas and can be installed at the head of each EVSE parking stall. Another method in common use is for public pay parking lots where a central kiosk is used for credit card purchases. The parking stall number is identified at the kiosk and a parking receipt issued that can be displayed in the vehicle. There is little cost for the meter and a single kiosk reduces the point of service cost for the whole parking lot. This system will require an attendant to periodically monitor the area for violations. Penalties for violators will need to be determined. A coin operated meter also may invite vandalism.

- **Radio-Frequency Identification (RFID) Subscription Service**

Like the smartcard, an RFID fob can be programmed with user information. The RFID reader collects the information from the fob to activate the EVSE station. A monthly subscription for the user keeps the fob active and the monthly fee can be based upon number of actual uses or a set fee. The reader is programmed for the accepted RFID.

Figure 5-5 RFID Fob[11]

[10] ACR-38 Smart Card Reader by Advanced Card Systems

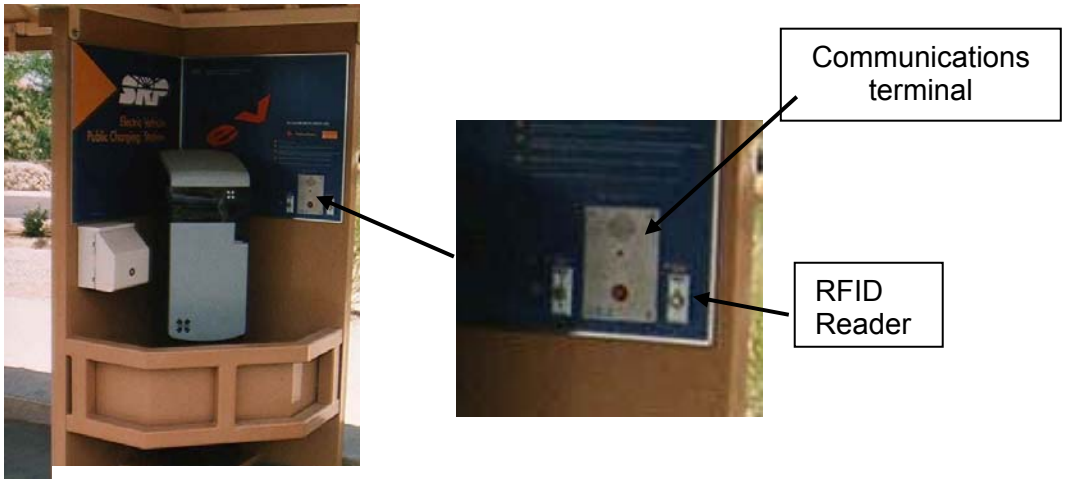

Figure 5-6 RFID Reader and Communications Terminal

G. Data Collection

More than simply recording payment for service, the use of a smartcard or RFID can substantially increase the amount of information available at each publicly available charging station. Data collection systems can track usage at each of the stations and provide feedback on actual EV usage. It may be found that usage at some venues is lighter than expected whereas others may be heavier. This information could be helpful in expanding publicly available charging locations. In addition, the time of day usage may show peak usage at expected or perhaps unexpected times which may impact power utilization. Some EVSE may include features to allow a wide range of data to be collected.

H. Vandalism

Publicly available charging carries the possibility of vandalism and theft. Destruction of property through purposeful defacing of equipment is a possibility, however, such destruction actually proved to be very minor during EV usage in the mid 1990s. Still, as public acceptance and the quantity of publicly available charging sites continue to grow, steps should be taken to minimize this possibility.

Most EVSE can be constructed of materials that will clean easily and removal of graffiti can be accomplished. Careful planning on site locations to include sufficient lighting and equipment protection will discourage damage and theft. Motion sensor activated lighting may be a benefit to users and a deterrent for abusers. EVSE with cable retractors or locking compartments for the EVSE cord and connector may be designed. Location of the EVSE in security patrolled areas or within sight of manned centers will discourage vandalism.

EVSE Owners in condominiums and apartments may desire to protect the equipment with a lockable secure cabinet to prevent unauthorized use and for vandalism protection.

---

[11] Texas Instruments RFID

I. Station Ownership

Ownership of the individual charging station may not be entirely clear. A business owner may wish to host publicly available charging but may not have the legal right to the parking lot or for making improvements. Charging stations constructed with public grants or other financing may have split ownership. One entity may own the charger and another may own the infrastructure. The sale of a business may include the EVSE or the sale of the property may include both. EVSE may be rented or leased equipment. Before planning any installation, it is important to identify the entities that have legal rights with respect to the equipment and its installation. Whose approvals are required to obtain the permits and whose approvals are required to remove the equipment later?

For individual EV owners, the ownership of the EVSE should reside with the owner. The ownership of the installation should reside with the property owner. However, both may share legal responsibilities and liabilities for the equipment and both should be protected by insurance.

For publicly available charging, there may be a combination of owners. Utilities may wish to own and manage the public charging infrastructure in order to manage power requirements. In a successful EV market penetration, ownership of new public charging may shift to private ownership. Several businesses may join together to promote EV usage and may share in the EVSE ownership. However, there should be one individual business entity tasked with the responsibility of ownership along with proper contact information to be shared with the local utility.

J. Maintenance

The EVSE typically will not require routine maintenance. However, all usable parts can wear and periodic inspections should be conducted to ensure that all parts remain in good working order. Periodic cleaning may be required depending upon local conditions. Testing of communications systems and lighting should be conducted periodically. Repair of accidental damage or purposeful vandalism may also be required. Unless otherwise agreed, these responsibilities generally fall to the owner identified in Section G above.

6. Codes and Standards

During the initial introduction of EVs in the early 1990s, stakeholders representing the automotive companies, electric utilities, component suppliers, electric vehicle enthusiasts, equipment manufacturers and standards and national testing organizations worked to obtain consensus on methods and requirements for EV charging. This resulted in revisions to building codes, electric codes, first responder training, and general site design and acceptance documentation. These requirements are designed to protect the public and make EVSE accessible for use.

Equipment is designed to EVSE standards set by organizations, such as the Society of Automotive Engineers, and is tested through National Recognized Testing Laboratories, such as Underwriters Laboratories. This testing certifies that the equipment is suitable for its designed purpose. The equipment installation is required to follow the rules of the National Electric Code and the Building Codes. Both of these codes can be augmented by State or local governing bodies. Frequently the codes will also affect the standards provided - as is the case for Electric Vehicles.

Nothing within these Guidelines should be construed to allow any detail of the EV charging installations to deviate from the adopted building codes and planning ordinances of each jurisdiction in which they are installed. Our intent is to develop standard plans for each jurisdiction and to have those approved prior to requesting permits or inspection approvals from that jurisdiction. We understand tat those standard plans may vary slightly from jurisdiction to jurisdiction based on their specific adopted building codes and planning ordinances.

Regulatory Agencies are responsible for monitoring the installation process to ensure that the proper codes and standards are being implemented in order to protect the public health and conform to safety regulations.

A. Regulatory Agencies

The federal government as well as state, county and city's have model building codes established that provide minimum construction requirements for safe construction and installation processes.

The City of Phoenix, for example, currently recognizes, among others, the International Building Code and Arizona Revised Statutes. These model codes as well as national codes such as the National Electric Code are updated on a regular basis, based on industry performance and technical advances.

B. National Electric Code

The National Electric Code (NEC) is part of the National Fire Code series established by the National Fire Protection Association (NFPA) as NFPA 70. The NEC codifies the requirements for safe electrical installations into a single, standardized source. This code is adopted by state and local jurisdictions and may be augmented by those jurisdictions to be applied as the local practice. When identifying the electrical requirements for EVSE installation, it is important to confirm with the local jurisdiction on its local requirements in addition to the national code standard. The NEC is updated every three years. The current published adopted edition is 2008, not all jurisdictions have approved this and care should be taken to follow the electrical code in place for each jurisdiction. Section 625 of the NEC specifically addresses Electric Vehicles.

C. SAE and UL

Currently, the Society of Automotive Engineers (SAE) has determined that there will be a single conductive coupler design. The J1772 “SAE Electric Vehicle Conductive Charge Coupler” is the standard that is being used by automotive suppliers in the United States. While J1773, the Inductive Charge Coupler is still active, none of the automakers are using this method.

Applicable SAE Standards include:

- SAE J1772
- SAE J2293
- SAE J2847
- SAE J2836
- SAE J2894
- SAE J551

SAE J2293 establishes requirements for EV and the off- board EVSE used to transfer electrical energy to an EV from a utility source. This document defines, either directly or by reference, all characteristics of the total EV Energy Transfer System (EV-ETS) necessary to insure the functional interoperability of an EV and EVSE of the same physical system architecture. The ETS, regardless of architecture, is responsible for the conversion of AC electrical energy into DC electrical energy that can be used to charge the Storage Battery of an EV. J2847 provides specifics on digital communications. J2836 provides use case for digital communications between vehicle and EVSE. J2894 addresses on-board charger power quality. J551 provides standards for electromagnetic compatibility.

Underwriters Laboratories (UL) provides testing and certification that equipment complies with relevant standards especially in areas involving public safety. The following UL standards form a basis for certifying EVSE:

- UL 2202 Electric Vehicle (EV) Charging System Equipment
- UL 2231-1 Personnel Protection Systems for Electric Vehicle (EV) supply Circuits: General Requirements
- UL 2231-2 Personnel Protection Systems for Electric Vehicle (EV) supply Circuits: Particular Requirements for Protection Devices for Use in Charging Systems
- UL 2251 Plugs, Receptacles and couplers for Electric Vehicles

Equipment that successfully completes the testing is “certified”, “approved” or “listed” as meeting the standard. In general, the SAE and UL requirements are more restrictive and are expected to be incorporated in harmonized standards.

D. Occupational Safety and Health

Under the Occupational Safety and Health Act of 1970, OSHA's role is to assure safe and healthful working conditions for working men and women; by authorizing enforcement of the standards developed under the Act; by assisting and encouraging the States in their efforts to assure safe and healthful working conditions; by providing for research, information, education, and training in the field of occupational safety and health.[12]

The Arizona State Department of Labor and Industries publishes the Safety and Health Core Rules, which are the basic safety and health rules needed by most employers in The State of Arizona.

E. Engineering, Permitting & Construction

The process flowcharts identified in Figure 4-4, 4-7, 4-9 and 4-15 all require permitting of the work. A typical permit application will include the name of the owner or agent, the physical address where the work will be conducted, parcel number, the voltage and amperage of the system, the name, address and license number of the qualified contractor and whether additional trades will be involved as well as other requirements by jurisdiction.

Service load calculations may be required. The electrical contractor will review the existing current service loading and consider the rating of the EVSE to be installed. A new loading calculation then will determine whether the existing service panel is adequate or new service is required.

It is recommended that local methods be considered to streamline the permitting process for residential EVSE installations. For BEV purchasers, the Level 1 Cord Set provided with the vehicle will require a significant charge period so that a Level 2 EVSE will be desired. Keeping the time span from purchase to fully functional and inspected EVSE installation will be important for customer satisfaction.

Installation drawing requirements may vary by jurisdiction to include simply layouts for residential installations to a full set of plans for public charging. In general, an electrical contractor from eTec's approved certified contractor network can complete the requirements for residential garage circuits.

For fleet and public charging, an engineering company is recommended to prepare the detailed site plans for installation. Several trades may be involved including general contracting, electrical, landscaping, paving, concrete, masonry, and communications systems. As noted above, careful planning is required to coordinate this effort and an engineering company can provide the detailed set of drawings that will be required. In addition, there may be several permitting offices involved with the approval of these plans.

---

[12] OHSA website www.osha.gov

7. Utility Integration

A. Background

Electric utilities are under significant pressure to maintain a dependable, clean and low cost electrical supply to their customer base. In order to achieve these goals, utilities are evaluating and in some cases implementing Smart-Grid technologies that allow them to control various electrical loads on their system. Through these Smart-Grid technologies, utilities can minimize new power plant, and electrical distribution and transmission investment by shifting and controlling load while minimizing the impact to the customer.

Advanced Metering Infrastructure (AMI) or Smart-Meters are being deployed by utilities to provide remote meter reading. Smart Meters also have the ability to control various customer loads.

Electric vehicles are one of the better loads to control for the utilities through Smart Meters because EVs have an on-board storage system and delaying the charge of the battery has no noticeable impact on the customer unlike a lighting or air-conditioning load which can have an immediate impact on the customer when turned off. Additionally, a neighborhood transformer may not be sized for every EV owning customer in an area to be charging at the same time. The ability to schedule the EV charging connected to a neighborhood transformer could significantly extend the life of that transformer or even delay or remove the requirement to replace the transformer with a larger size.

As the adoption of EVs increases, load control strategies for multi-family dwellings may allow the utility to control the charge times to maximize effectiveness and utilization of existing transformers.

During residential EVSE installations, the electrical contractor will evaluate the electrical service capabilities of the existing system. If inadequate power is available at the service entrance, an additional service panel or other upgrade may be required.

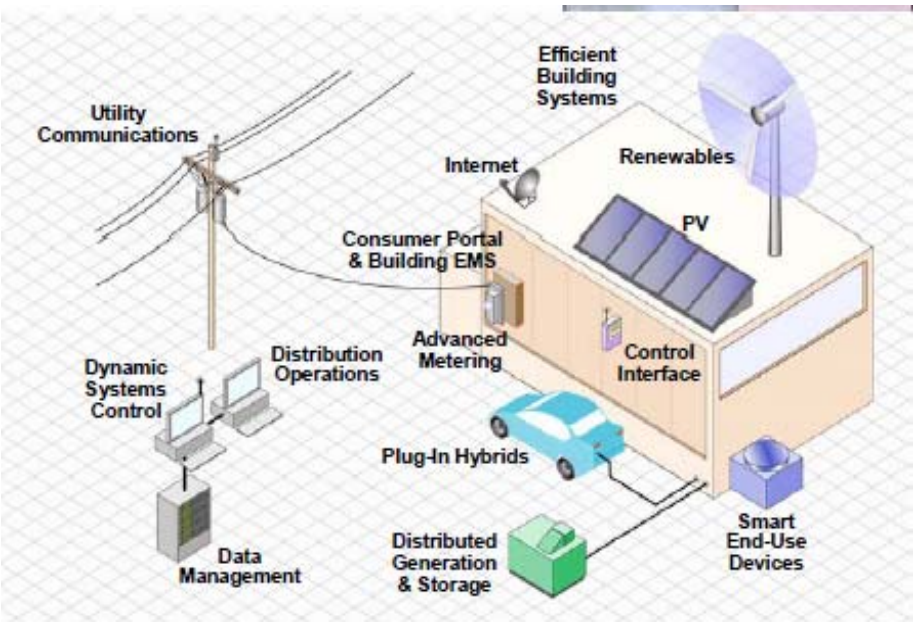

Figure 7-1 Smart Grid Infrastructure[13]

Figure 7-1 incorporates many design features of a Smart Grid/distributed energy storage system. Home use of photovoltaic or wind energy can supplement the utility power. A home area network (HAN) communicating with the Advanced Meter can control lighting, heating, cooling, and other major appliances. Given the right incentives, a home owner may elect to have the utility control total home consumption or delivery power back to the utility through the storage capability of the EV.

There are various mechanisms for utilities to control EV load including;

- **Time-of-Use (TOU)**

  TOU is an incentive based electrical rate that allows the EV owner to save money by charging during a designated "off-peak" time frame established by the utility. Typically, these off-peak times are in the late evenings through early mornings and/or weekends, during a time frame where demand on the utility electrical grid is at its lowest point. TOU is currently being implemented by some utilities but there is not a common approach at this time. Discussion with the local utility prior to installation of the charge station is recommended.

---

[13] Transportation Systems (PEV)in Electric -f PlugSuccessful Integration o, EPRI, Plug-In 2009 Canada, September 2009

- **Dual Metering**

Some utilities will provide a special rate for EV charging and will require the installation of a second meter specifically for this purpose. This will require additional installation time since the utility must install the meter before the EVSE is available for use. The use of a “revenue grade” meter in the EVSE and a communications path to allow the utility control may obviate the need for the second meter.

- **Demand Response**

Demand response is a voluntary program that allows a utility to send out a signal to customers (typically large commercial customers) to cut back on loads during times the utility is experiencing a high peak on their utility grid. The customers are compensated when they participate in these programs to make it worth their while. EVs may participate in such programs in the future as deployment of smart meters become more prevalent. Utilities may enter into contracts with EV owners to allow the utility to maintain more control on EV charging.

- **Real-Time Pricing (RTP)**

RTP is a concept that could be implemented in the future for electric vehicles whereby pricing signals are sent to a customer through a number of communication mediums that allows the customer to charge their EV during the most cost effective period. For example, the EVSE installed in the EV owners garage could be pre-programmed to make sure the car is fully charged by 6am, at the least cost possible. RTP signals from the utility would allow this to occur without customer intervention. In order to implement RTP smart meters would need to be in place at the charging location and the technology built-in to the EVSE. These programs are under development at the time of this writing.

- **Vehicle-to-Grid (V2G)**

V2G is a concept that allows the energy storage in electric vehicles to be used to support the electrical grid during peak electrical loads, in times of emergency such as grid voltage support or based on pricing economics. V2G could also support vehicle-to-home whereby the energy stored in the vehicle battery could supplement the home electrical requirements. V2G requires that the on-board vehicle charger be bi-directional (energy can flow both directions) and that the EVSE at the premise also be bi-directional and accommodating of all the utility requirements related to flowing energy back into the electrical grid. Although there are various development efforts in V2G, this concept for on-road EVs is likely several years away from implementation in any commercial sense.

B. Interconnection Requirements

Although vehicle-to-grid (V2G) connections may be in the future for most applications, some infrastructure will incorporate EVSE with solar parking structures or other renewable resources. Because these systems will connect to the local grid, it will be necessary to contact the local utility to determine if there are any interconnection requirements. These requirements are in place to protect personnel and property while feeding electricity back into the utility grid. Most utility requirements are typically already in place for solar photovoltaic and wind systems that are grid-tied to the utility.

C. Commercial Electrical Supply/Metering

There are typically two scenarios for connection to a commercial electrical supply. The first is utilizing the existing main service entrance section (SES) or an otherwise adequate supply panel at the commercial establishment, and the second is to obtain a new service drop from the local electric utility.

The decision on which approach to take depends on a number of factors including the ability to obtain permission from the property owner and/or tenant of the commercial business, and the location of the existing SES or adequate electrical supply from the proposed electric vehicle charge station site. If permission is granted from the property owner and/or tenant (as required), then a fairly simple analysis can be performed to compare the cost of utilizing an existing supply or a new service drop to determine the best approach.

A new utility service drop will typically require a new customer account be setup, which may include a credit evaluation of the entity applying for the meter, and a monthly meter charge in addition to the energy and demand charges. In addition, the local utility may require an analysis of the anticipated energy consumption in order to justify covering the cost of the new service drop.