Case 08-10

9/2/09 rev

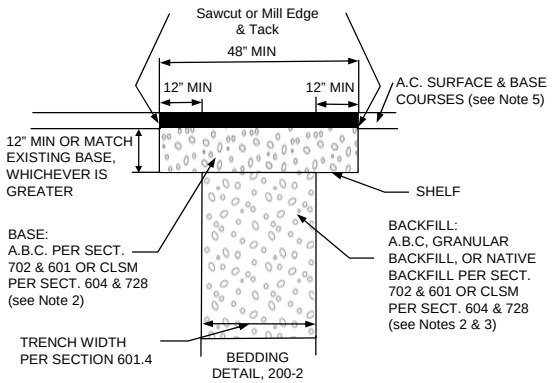

"T TOP" TRENCH REPAIR

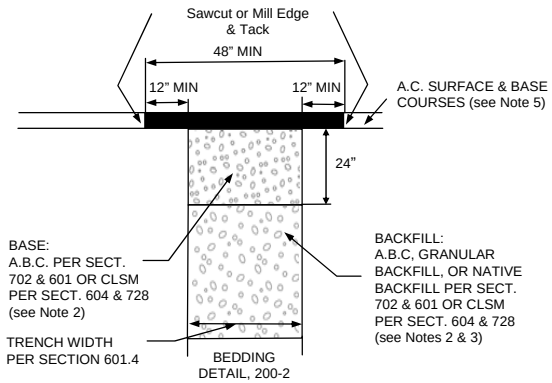

TYPE "A" TRENCH REPAIR

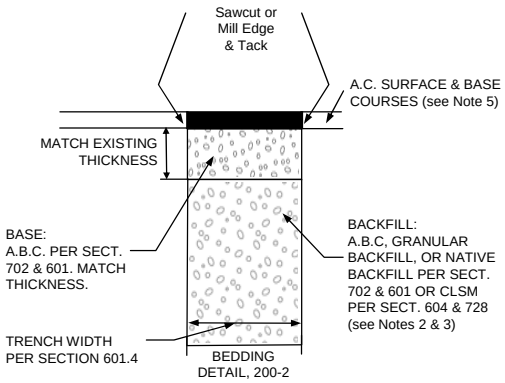

TYPE "B" TRENCH REPAIR

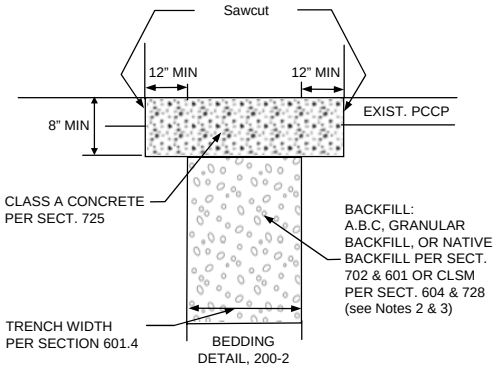

TYPE "C" TRENCH REPAIR

(trench in portland cement concrete pavement)

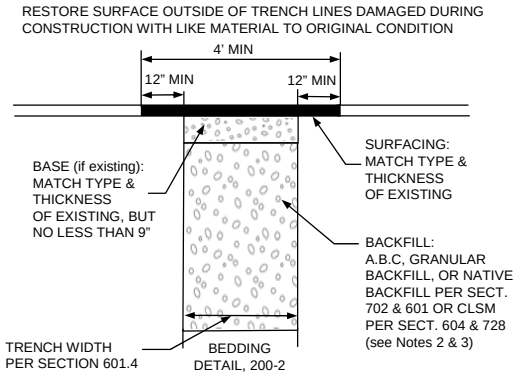

TYPE "D" TRENCH REPAIR

(trench not under concrete or asphalt pavement)

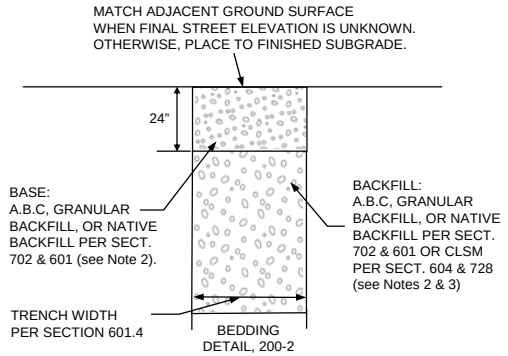

TYPE "E"

(trench in future roadway prism or alley)

NOTES:

1. PAVEMENT MATCHING AND SURFACE REPLACEMENT SHALL BE IN ACCORDANCE WITH SECTION 336.
2. TYPE OF BACKFILL AND BASE (IF APPLICABLE) SHALL BE AS NOTED HEREIN UNLESS OTHERWISE SPECIFIED IN CONTRACT DOCUMENTS. IF SPECIFIED, CLSM SHALL BE 1/2-SACK PER SECTIONS 604 AND 728.
3. TRENCHES LESS THAN 24" WIDE SHALL BE BACKFILLED FROM TOP OF BEDDING TO BOTTOM OF SURFACING MATERIALS WITH 1/2-SACK CLSM PER SECTIONS 604 AND 728.
4. BASE, BACKFILL, BEDDING AND FOUNDATION COMPACTION REQUIREMENTS SHALL BE IN ACCORDANCE WITH SECTION 601.
5. ASPHALT CONCRETE SURFACE AND BASE COURSES SHALL COMPLY WITH SECTION 336.2.4.1 UNLESS OTHERWISE SPECIFIED IN CONTRACT DOCUMENTS.
6. USE TYPE "A" FOR LONGITUDINAL TRENCH REPAIR AND USE "T-TOP" FOR TRANSVERSE TRENCH REPAIR (SEE DETAIL 200-2) UNLESS OTHERWISE SPECIFIED IN CONTRACT DOCUMENTS . TYPE "B" TRENCH REPAIR MAY BE USED FOR TRANSVERSE TRENCH REPAIR IF SPECIFIED BY THE AGENCY.
7. PROVIDE MINIMUM 12" WIDE SHELF AS SHOWN IN "T-TOP" TRENCH REPAIR AT ENDS OF TYPE "A" TRENCH REPAIR EXCEPT WHERE EDGE ABUTS EXISTING CONCRETE.
8. USE "T-TOP" PAVEMENT REPLACEMENT WHERE A TRENCH IS NOT PARALLEL TO A STREET OR GOES THROUGH AN INTERSECTION.
9. SEE DETAIL 200-2 FOR REMNANT PAVEMENT REMOVAL REQUIREMENTS.
10. COPPER OR POLYETHYLENE WATER PIPES EXPOSED IN TRENCHES TO BE BACKFILLED WITH CLSM SHALL BE WRAPPED WITH MIN ¾" THICK CLOSED CELL FOAM INSULATION OR ¾" WIDE BLACK INSULATION BEFORE PLACING CLSM.

DETAIL NO.				REVISED	DETAIL NO.
200-1	MARICOPA ASSOCIATION of GOVERNMENTS	STANDARD DETAIL ENGLISH	BACKFILL, PAVEMENT AND SURFACE REPLACEMENT	9/2/09 FINAL	200-1

Case 08-10

9/2/09 rev

LONGITUDINAL TRENCH
(trench in pavement parallel to traffic)

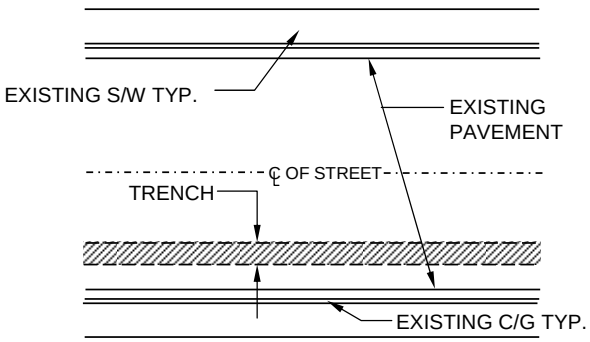

TRANSVERSE TRENCH
(trench in pavement not parallel to traffic)

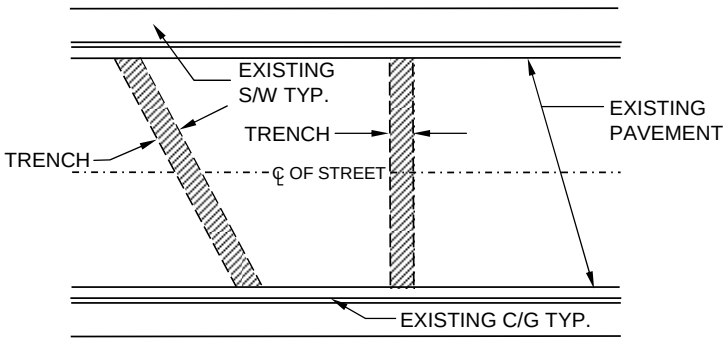

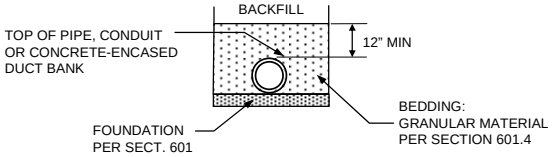

BEDDING DETAIL

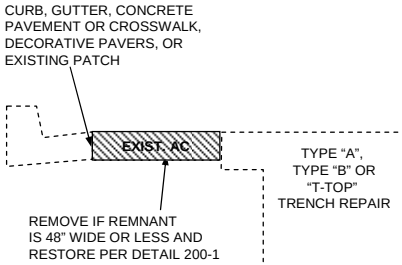

REMNANT PAVEMENT REMOVAL

NOTES:

1. SEE DETAIL 200-1 FOR DETAILED TRENCH REPAIR REQUIREMENTS FOR TRENCH TYPES NOTED HEREIN.
2. SEE MAG DETAIL 211 FOR REQUIREMENTS REGARDING THE USE OF PLATING OF TRANSVERSE TRENCHES. USE OF STEEL PLATES SHALL NOT EXCEED 72 HOURS AFTER COMPLETION OF BACKFILL AND PRIOR TO FINAL PATCHING.

DETAIL NO.		STANDARD DETAIL		REVISED	DETAIL NO.
200-2	MARICOPA ASSOCIATION of GOVERNMENTS	ENGLISH	BACKFILL, PAVEMENT AND SURFACE REPLACEMENT	9/2/09 FINAL	200-2