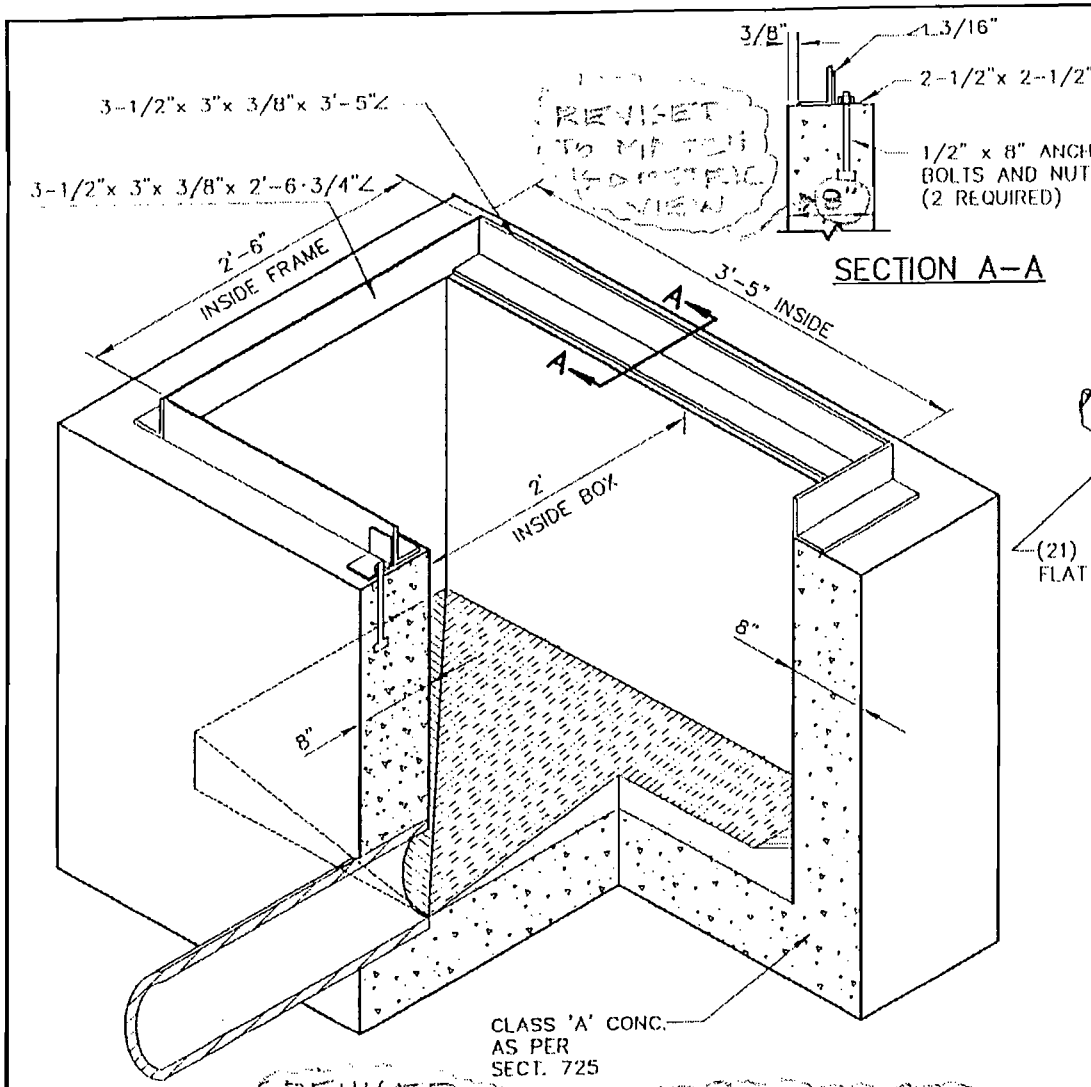

REVISED TO MATCH FRONTAL VIEW

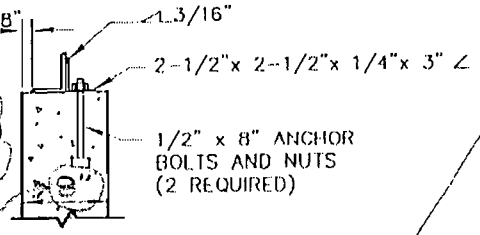

SECTION A–A

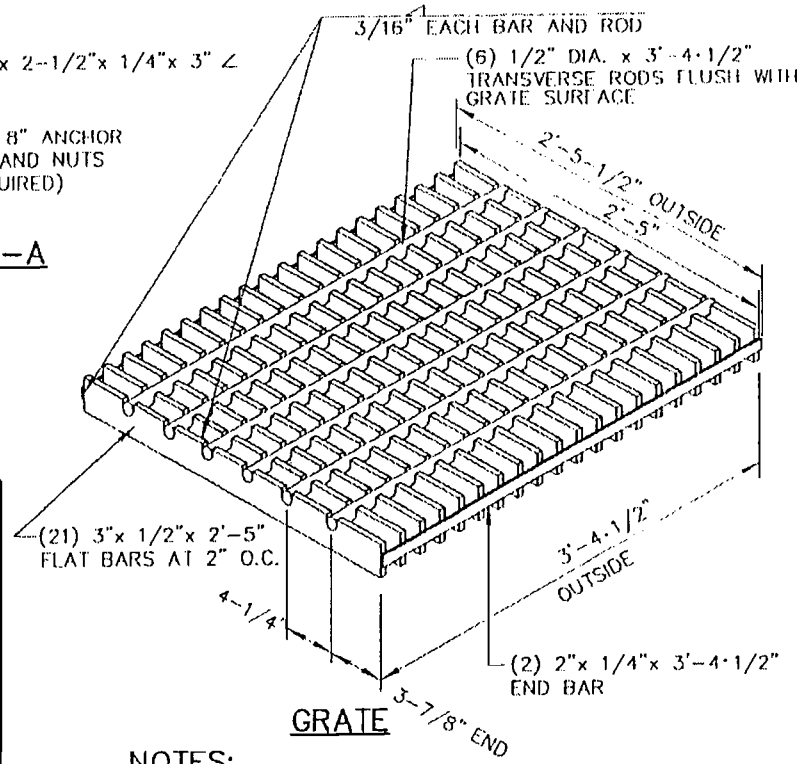

GRATE

NOTES:

1. PIPES MAY ENTER OR LEAVE ANY WALL. BOTTOM OF BOX TO BE SLOPED TO OUTLET PIPE FROM ALL DIRECTIONS AND TROWELLED TO A HARD SMOOTH SURFACE.
2. CONNECTION PIPES MAY BE PLACED IN ANY POSITION AROUND THE WALLS PROVIDED THE POSITION IS CONSISTENT WITH THE PLAN.
3. OUTLET PIPE SHALL BE TRIMMED TO FINAL SHAPE AND LENGTH BEFORE CONCRETE IS POURED.
4. ALL STRUCTURAL STEEL TO BE PAINTED ONE SHOP COAT OF NO. 1 PAINT AND TWO FIELD COATS OF NO. 10 PAINT AS PER SECT. 790.
5. ALL WELDS ON FRAME AND SIDE BARS ON GRATE SHALL BE FULL LENGTH OF JOINT.

REVISED
NOTE:
SEE DETAIL S34-1 FOR THICKNESS AND SLOPE DIMENSIONS OF BOTTOM.

DETAIL NO.				REVISED	DETAIL NO.
535	MARICOPA ASSOCIATION of GOVERNMENTS	STANDARD DETAIL ENGLISH	CATCH BASIN TYPE 'F' (FOR USE WITHOUT CURB)		535

CASE 07-01A

← MAX. CLEARANCE BETWEEN FRAME & GRATE IS 1/2".

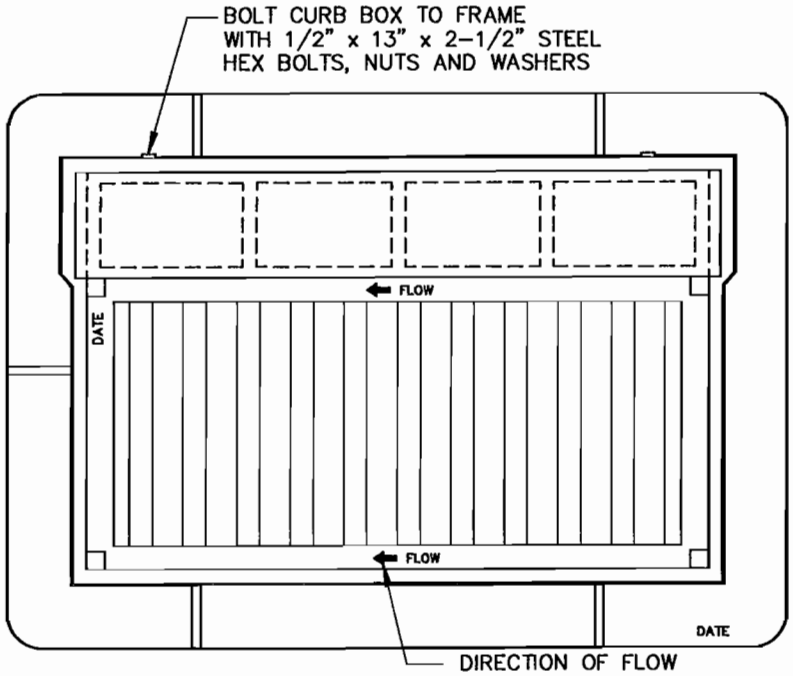

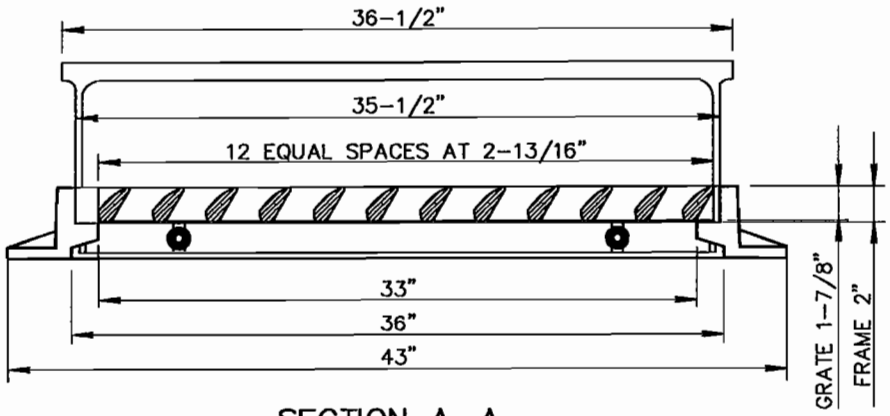

SECTION A-A

CAST IRON FRAME – GRATE – CURB BOX

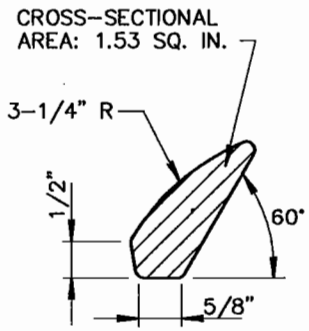

VANE DETAIL

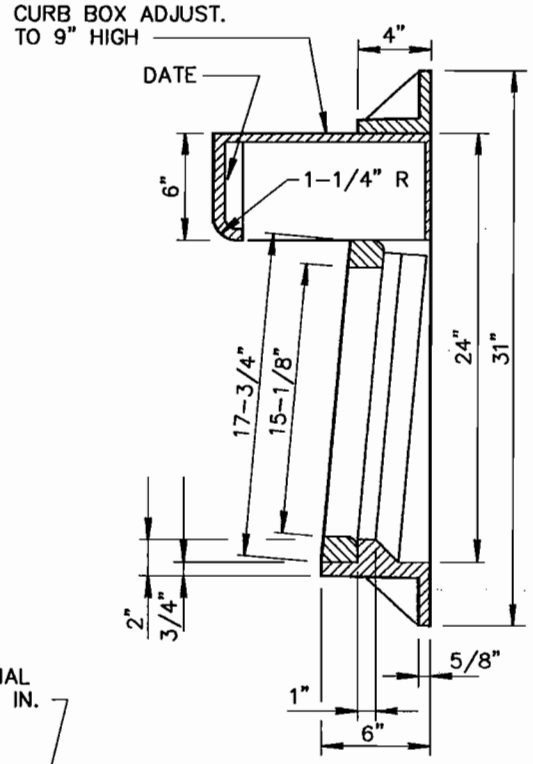

SECTION B-B

NOTE:

DIMENSIONAL CHANGE REQUIRED FROM 3'-5" WIDTH TO 3'-0" AND 1'-9" DEPTH TO 2'-0"
MATERIAL CAST GRAY IRON ASTM A-48-83 CLASS 35B.
FRAME WEIGHT 209 LBS; GRATE 140 LBS; CURB BOX 92 LBS.

DETAIL NO.			REVISED	DETAIL NO.
534-3	MARICOPA ASSOCIATION of GOVERNMENTS STANDARD DETAIL ENGLISH	CATCH BASIN TYPE 'E' (DETAILS)		534-3

CASE 07-03

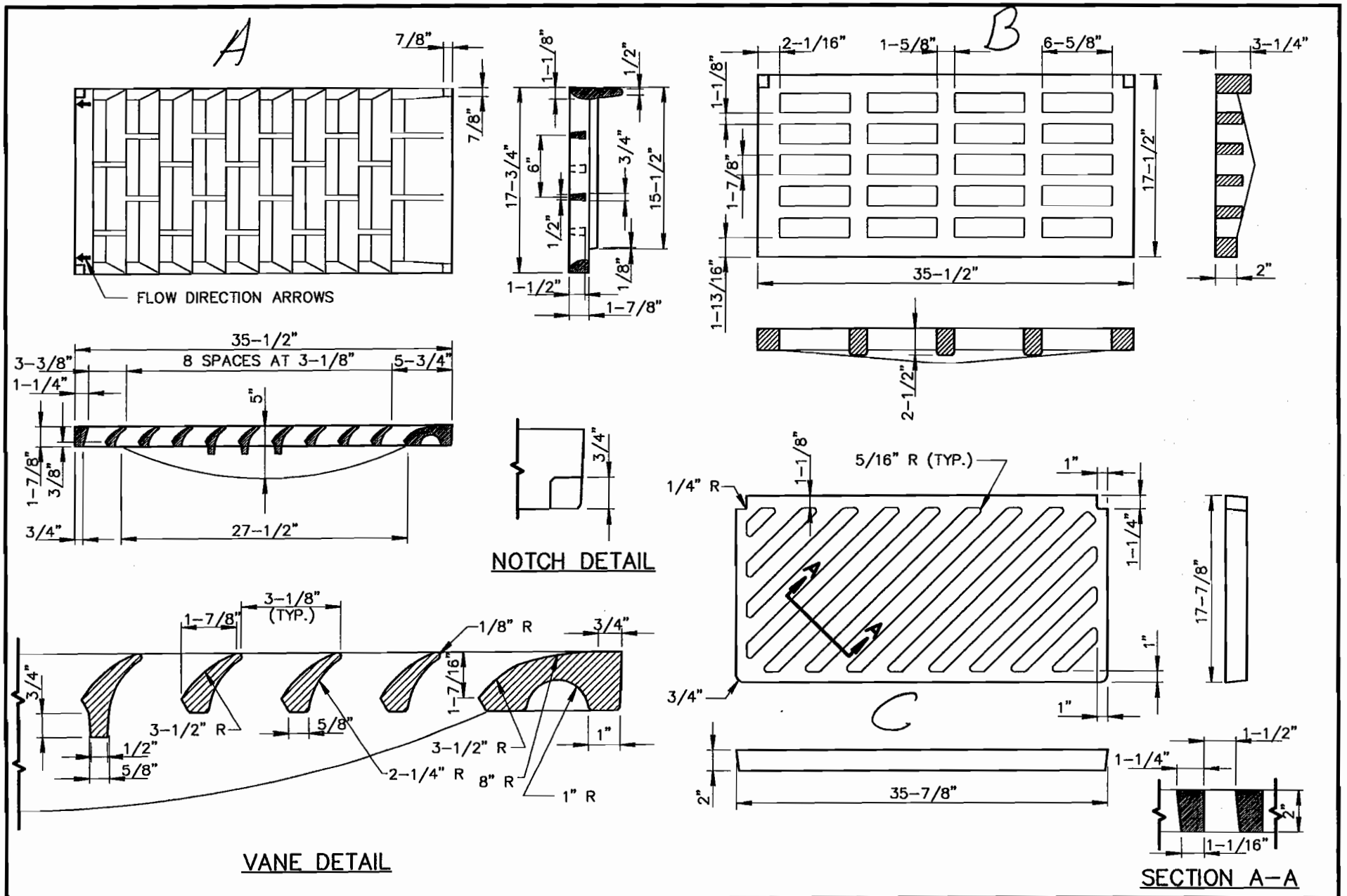

DETAIL NO.				REVISED	DETAIL NO.
534-5	MARICOPA ASSOCIATION of GOVERNMENTS	STANDARD DETAIL ENGLISH	ALTERNATE GRATE STYLES SUMP LOCATION		534-5

CASE 07-03

Freedom Plastics, Inc.

Road and Highway Drainage Systems

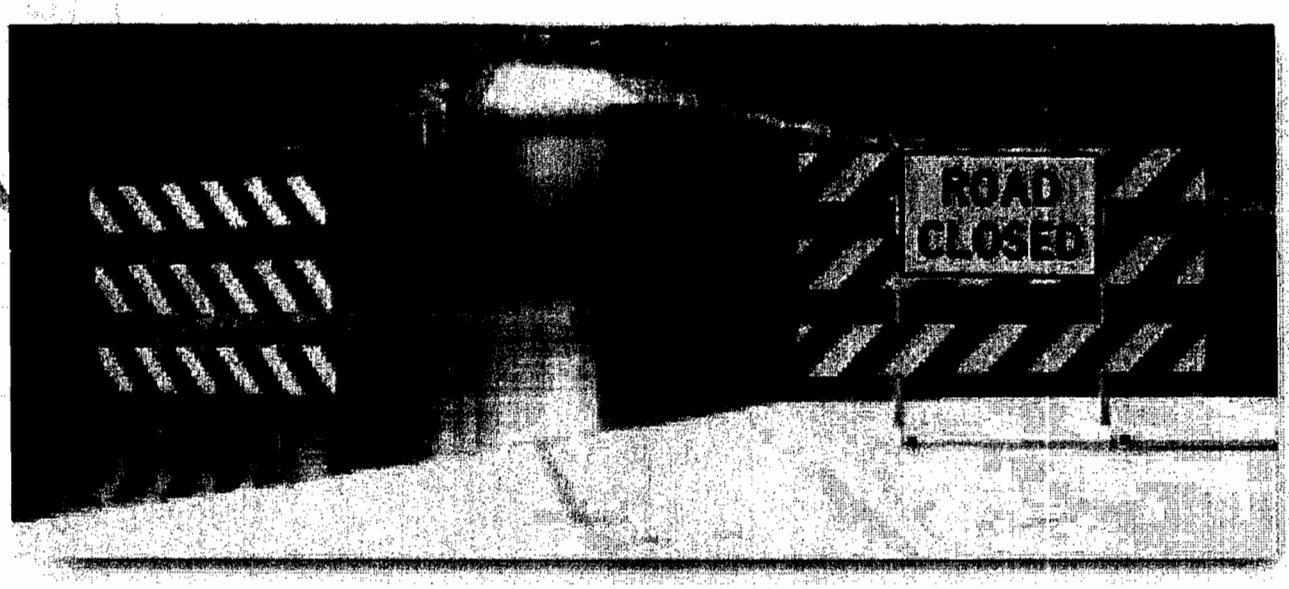

Product Description

Short Form Specification:

- **12" - 30" diameter** — **PVC catch basins**
- **2'x3' & 2' x 3'** — **Ductile Iron Grates**

PVC basins are becoming more popular and replacing concrete basins because of their resistance to corrosion, cost savings, ease of installation and watertight joints.

Freedom Plastics Inc. Road and Highway Drainage Systems are designed to withstand the demanding loads found on our streets and highways.

Unlike other PVC basins made from thin wall PVC pipe which may crack during installation, all Freedom basins and outlets are fabricated from heavy duty SDR35 sewer pipe.

Freedom Plastics' grates are H25 load certified. When installed using recommended guidelines, Freedom Plastics drainage structures will meet H25 required conditions.

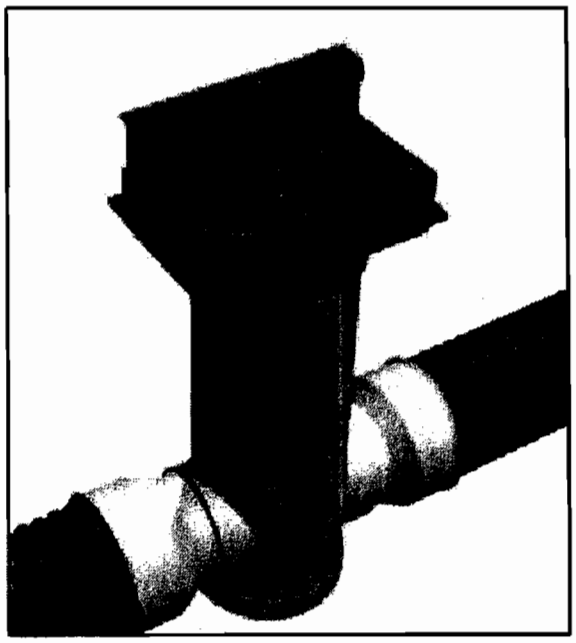

Road and Highway Drainage Systems

Basins

All PVC drainage products manufactured by Freedom Plastics are made from SDR 35 Sewer pipe stock, which meets or exceeds all requirements of ASTM D-3034 (4" – 15") or F-679 (18" – 36") The basic material used in the manufacture of this pipe stock shall conform to ASTM D-1784.

Drainage products meet or exceed all strength requirements for fabricated fittings as specified in ASTM D-3034, F-679, F-949, F-794, and F-1336.

Pipe stub connections are made from the same material as the bodies, and are designed to provide a watertight connection with the piping system. Pipe stub connectors and piping system have been tested in accordance with, and meet or exceed the water tight joint requirements of ASTM D3212, *Joints for Drain and Sewer Plastic Pipe Using Flexible Elastomeric Seals.*

(A) Basin	(B) Outlet	(C) Min. Sump
12"	4 – 12"	6"
15"	4 – 15"	6"
18"	4 – 18"	6"
24"	4 – 24"	8"
30"	4 – 30"	10"
36"	4 – 36"	14"

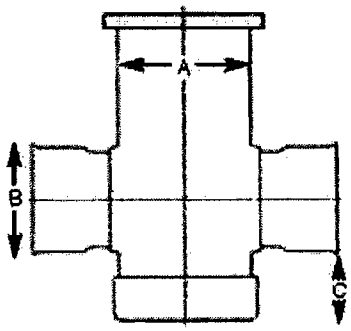

Grates

All Freedom Traffic or Curb Inlet grates are painted, ductile iron and certified to meet ASSHTO M306–89 H25 load ratings. Grates are available in 24" x 24" or 24" x 36" sizes and in standard, diagonal, highflow configurations.

Traffic & Curb Open Area		
Standard	Diagonal	High Flow
2'X2' 212 sq in	205 sq in	290 sq in
2'X3' 330 sq in	328 sq in	458 sq in

Standard H-25 Rated

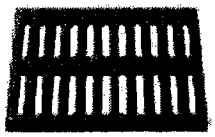

Diagonal H-25 Rated

High Flow H-25 Rated

The information in this document is give as guidelines only and is subject to change without notice.

Freedom Plastics, Inc.

PO Box 1488
Janesville, WI 53547-1488
Phone: 800-356-9432
Fax: 608-754-6134
www.freedomplastics.com
e-mail: CustomerService@freedomplastics.com

ISO 9001:2000 CERTIFIED

Distributed by:

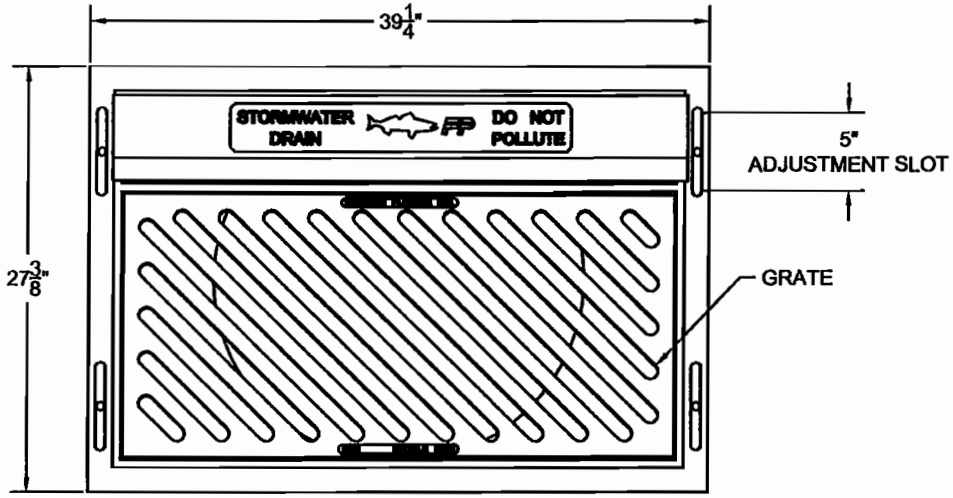

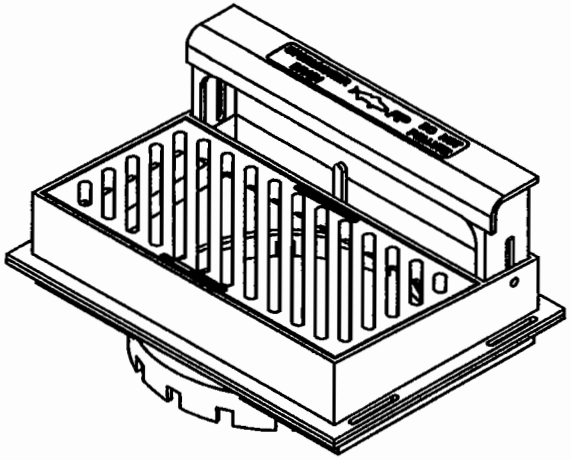

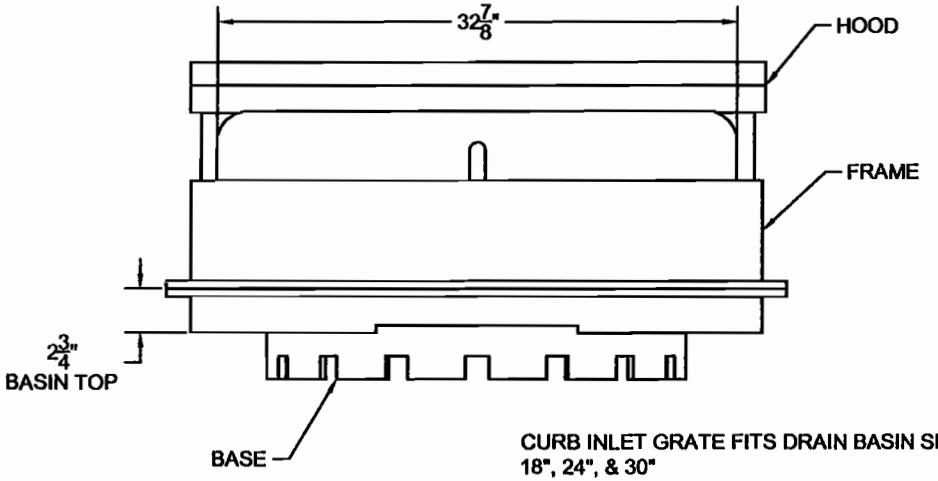

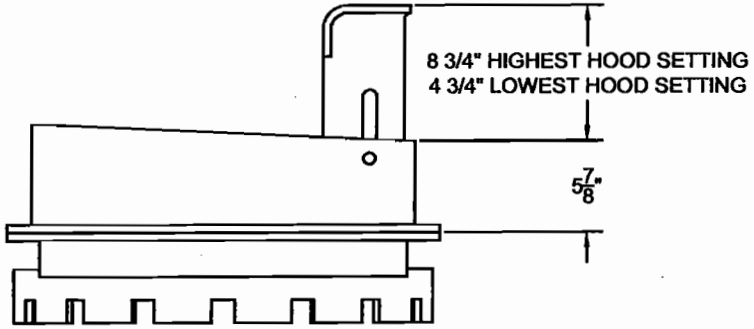

CURB INLET GRATE FITS DRAIN BASIN SIZES:
18", 24", & 30"
GRATES HAVE H-25 HEAVY DUTY RATING
QUALITY: MATERIALS SHALL CONFORM TO ASTM
A536 GRADE 70-50-05 & A48-CLASS 30B
MATERIAL: DUCTILE IRON GRATE
ALL CASTINGS ARE FURNISHED W/ BLACK PAINT AND
ZINC PLATED FASTENERS
LOCKING DEVICE: AVAILABLE UPON REQUEST

Freedom Plastics Inc.	215 S. ARCH ST. JANESVILLE, WI 53545 (608)754-2710		
2' X 3' CURB ASSEMBLY	DWG NO. 00-000	REV A	
	SCALE 1/8" : 1"	4-6-04	
IMPORTANT: This drawing is the property of FREEDOM PLASTICS INC. and contains confidential information which is not to be used in whole or in part for any purpose other than for which it was specifically furnished. This drawing is to be returned to FREEDOM PLASTICS upon demand.	TOLERANCES XXX= ±0.003" XX= ±0.010" X= ±0.050" ANGLES ±0.1"	DWN BY: SAG	CKD BY: SAG
	SIZE B	SHEET 1 OF 1	

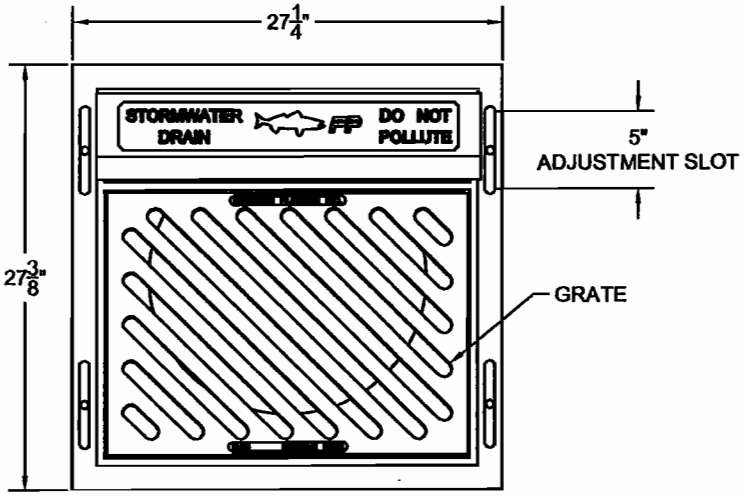

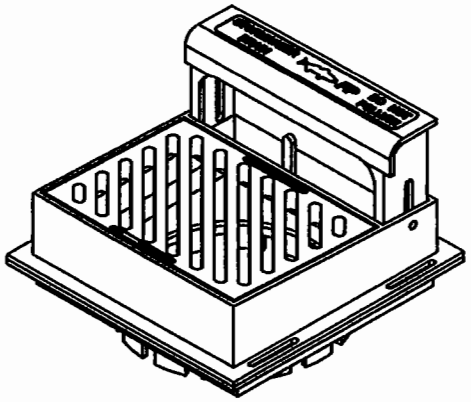

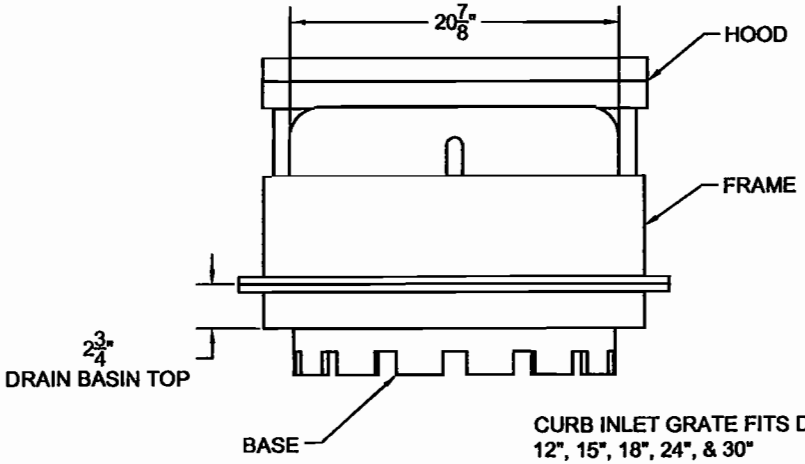

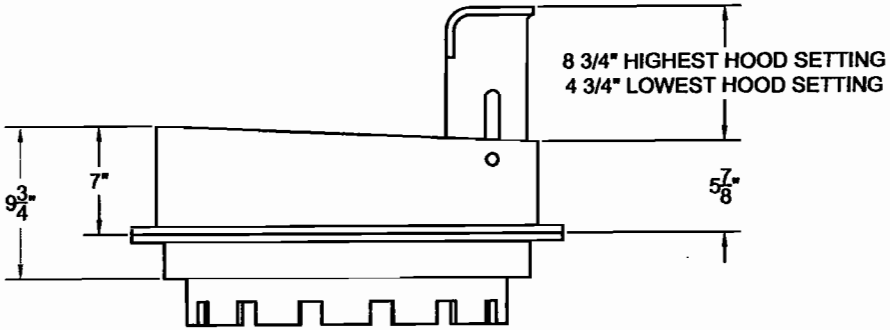

CURB INLET GRATE FITS DRAIN BASIN SIZES:
12", 15", 18", 24", & 30"
GRATES HAVE H-25 HEAVY DUTY RATING
QUALITY: MATERIALS SHALL CONFORM TO ASTM
A536 GRADE 70-50-05 & A48-CLASS 30B
MATERIAL: DUCTILE IRON GRATE
ALL CASTINGS ARE FURNISHED W/ BLACK PAINT AND
ZINC PLATED FASTENERS
LOCKING DEVICE: AVAILABLE UPON REQUEST

FP Freedom Plastics Inc.
215 S. ARCH ST.
JANESVILLE, WI 53545
(608)754-2710

2' X 2' CURB ASSEMBLY	DWG NO. 00-000	REV A	
	SCALE 1/8" : 1"	4-6-02	
IMPORTANT: This drawing is the property of FREEDOM PLASTICS INC., and contains confidential information which is not to be used in whole or in part for any purpose other than for which it was specifically furnished. This drawing is to be returned to FREEDOM PLASTICS upon demand.	TOLERANCES XXX= ±0.003" XX= ±0.010" X= ±0.050" ANGLES ±0.1°	DWN BY: SAG	CKD BY: SAG
	SIZE B	SHEET 1 OF 1	

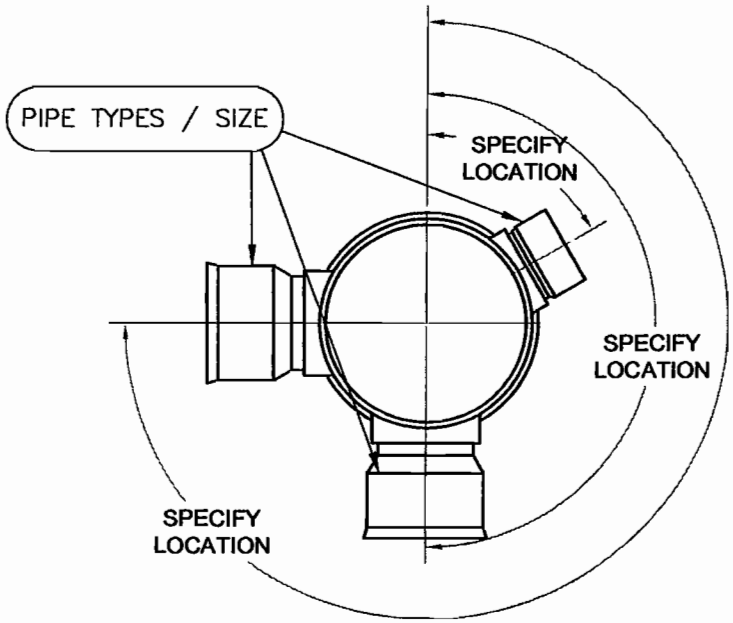

UP TO 6 OUTLETS AVAILABLE

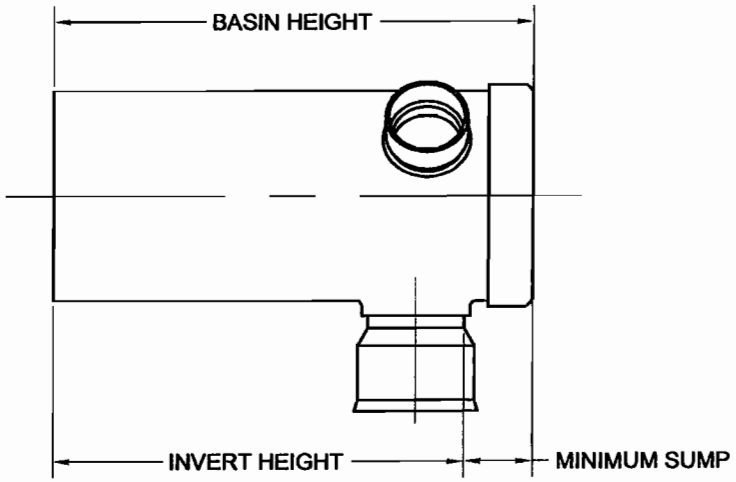

BASIN SIZE	STANDARD HEIGHT	MINIMUM SUMP
8"	18"	6"
10"	20"	6"
12"	24"	6"
15"	30"	6"
18"	34"	6"
24"	38"	8"
30"	48"	10"
36"	54"	14"

Grate Options	
H-25	H-25 Rated Heavy Duty
Ped	H-10 Pedestrian (8" - 24" only)
Drop	H-10 Pedestrian Drop In (6" - 30")
Solid	Solid Grate (12" - 36" only)
Domed	Domed Grate (8" & 10" only)

8-15" Basins are constructed to ASTM D3034
18-36" Basins are constructed to ASTM F679

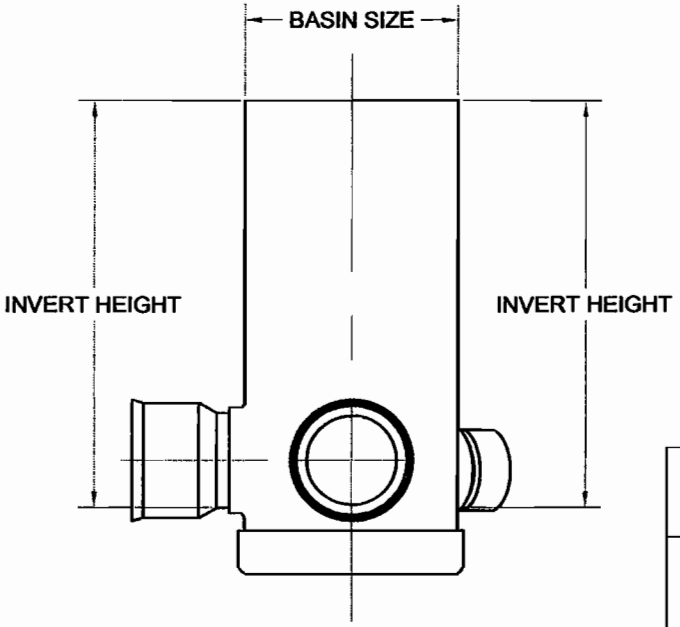

Freedom Plastics Inc.
215 S. ARCH ST.
JANESVILLE, WI 53545
(608)754-2710

TYPICAL DRAIN BASIN

DWG NO.	00-000	REV B
SCALE	DNS	10-29-02
DWN BY:	SAG	CKD BY: SAG
SIZE A	SHEET	1 OF 1

#	DESCRIPTION	DATE	APPROVED
B	CHANGED H-20 NOTE TO H-25	5-16-04 Typical Drain Basin.dwg	griffsa

IMPORTANT:
This drawing is the property of FREEDOM PLASTICS INC. and contains confidential information which is not to be used in whole or in part for any purpose other than for which it was specifically furnished. This drawing is to be returned to FREEDOM PLASTICS upon demand.

TOLERANCES
X= ± 1/16"
ANGLES ±2°

Specified Fittings CASE 07-03

2

CATCH BASIN DRAIN

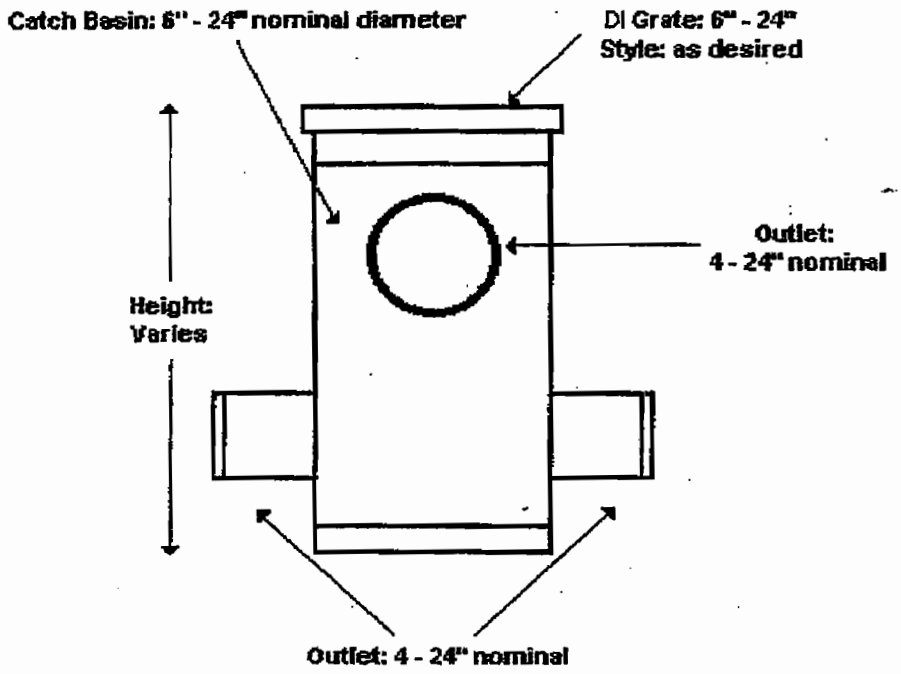

(Not to scale. Due to various factors affecting the production process, all dimensions are approximate).

Material meets the requirements of ASTM D3034/SDR35 including but not limited to the following:

D1784 Specification for rigid poly (vinyl chloride) (PVC) compounds and chlorinated poly (vinyl chloride) (CPVC) compounds
D2321 Practice for underground installation of flexible thermoplastic sewer pipe
D2412 Test method for external loading properties of plastic pipe by parallel-plate loading
D2444 Test method for impact resistance of thermoplastic pipe & fittings by means of a TUP (falling weight)
D2855 Practice for making solvent-cemented joints with poly (vinyl chloride) (PVC) pipe & fittings

May 17 07 11:49a Eric Reyman Specified Fit 3603256404 p.2

8

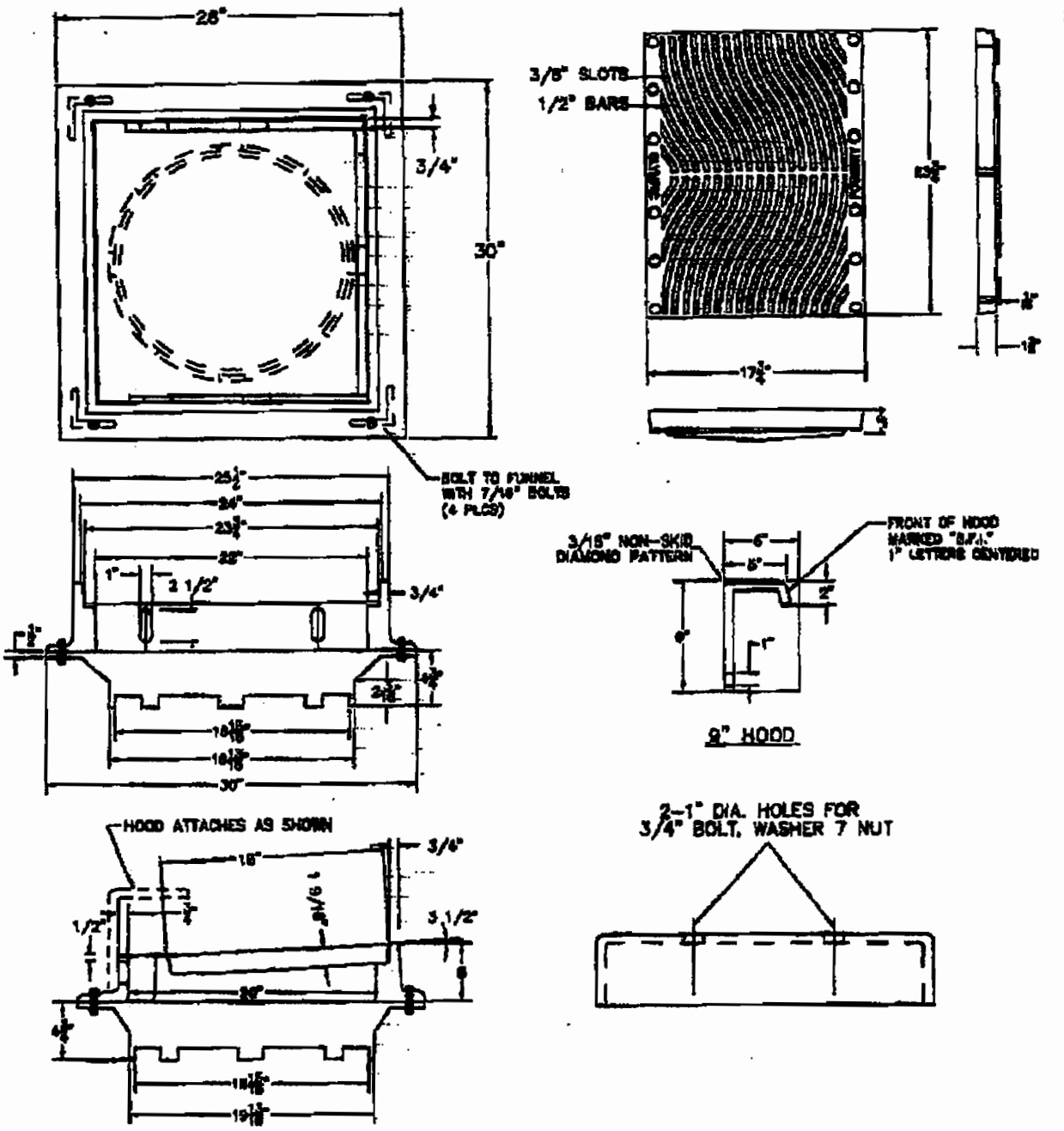

NOTES:
*FUNNEL FOR 18.70" O.D. PIPE
*HOOD TO BE MARKED "S.F.I."

OLYMPIC FOUNDRY INC.

SM52 FRAME, 18" FUNNEL, TWS GRATE, & 9" "S.F.I." HOOD

RATING: H-20 | PART NO. 12-4473SET

MATL: DUCTILE IRON ASTM A536, GL 80-55-06

APPROX WT: FRAME-220#, GRATE-70#, HOOD-30#, FUNNEL-50#

REV: A DATE: 08/27/04 CREATED DRAWING

REV A

DOCUMENT APPROVED | DWN: CM DATE: 08/27/04

6

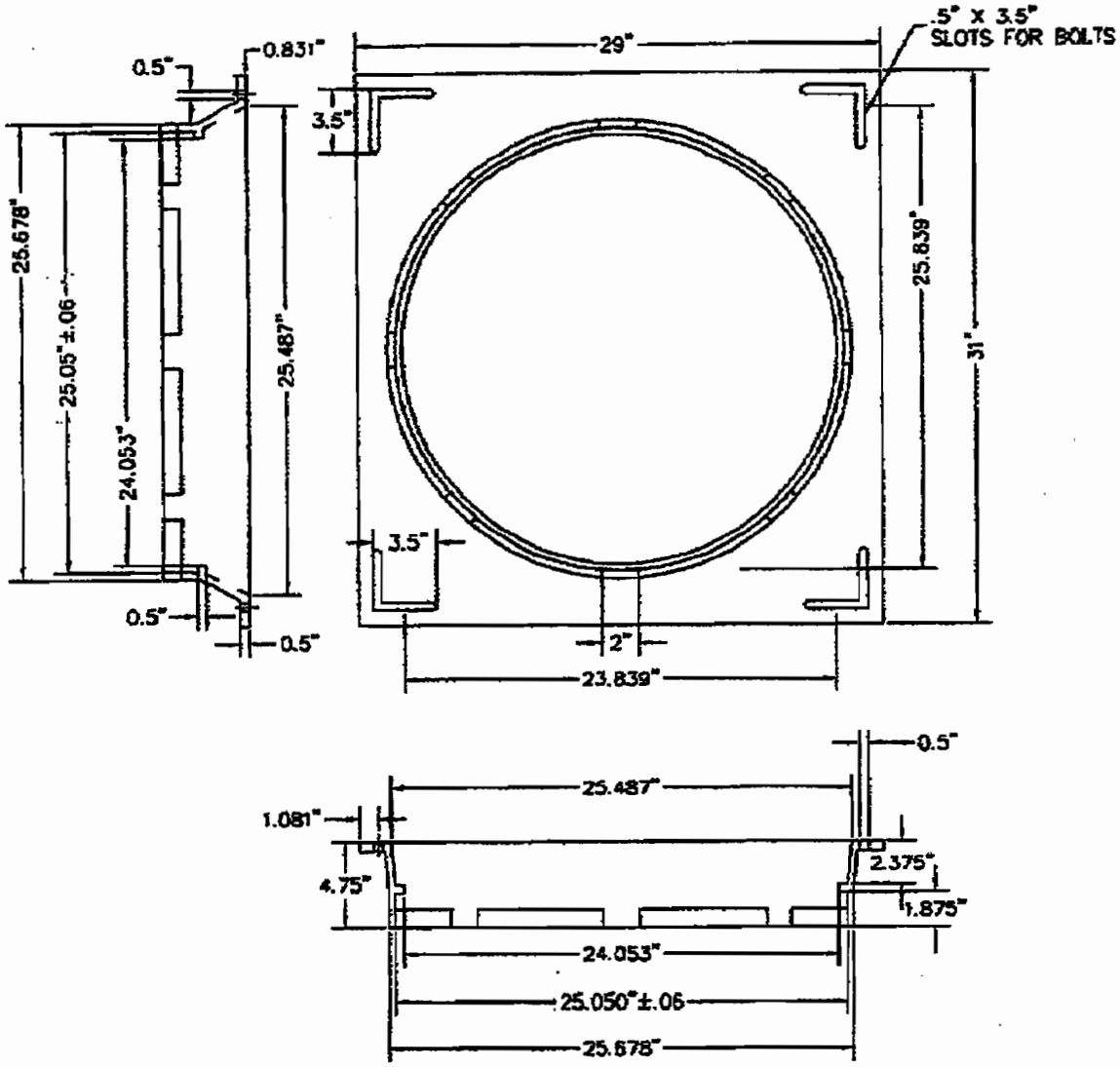

PART #	DESCRIPTION
12-4455D	SM52 FRAME
12-4475	SM52 FUNNEL, 24"
12-4467	SM52 9" "S.F.I." HOOD
81-5250	SM50 TWS GRATE
12-4475SET	SM52 FRAME W/BOLT HOLES, SM52 24" FUNNEL, SM52 9" S.F.I. HOOD, SM50 TWS GRATE

NOTES:
FUNNEL FOR 24.8" O.D. PIPE

OLYMPIC FOUNDRY INC.

SM52 24" FUNNEL

MATL: DUCTILE IRON ASTM A536, CL 80-55-06

RATING: N-A | PART NO. 12-4475

APPROX WT: FUNNEL-83#

REV: A DATE: 12/18/03 CREATED DRAWING

REV: B 02/15/04 CHANGED PIPE OPENING FROM 24 13/16" TO 25.05" — REV C

DOCUMENT APPROVED BY: DATE:

DWN: CL DATE: 12/18/03

CHKD: CL DATE: 12/18/03

DWG #: SM52 FUNNEL 24 REV B | SCALE: N/A | SHEET: 1 OF 1

CASE 07-04

CITY OF PEORIA
STANDARD DETAIL PE-363
WATER METER BOX LOCATION AND CONSTRUCTION

APPROVALS:

CITY ENGINEER _____ DATE

UTILITIES DIRECTOR _____ DATE 5/31/07

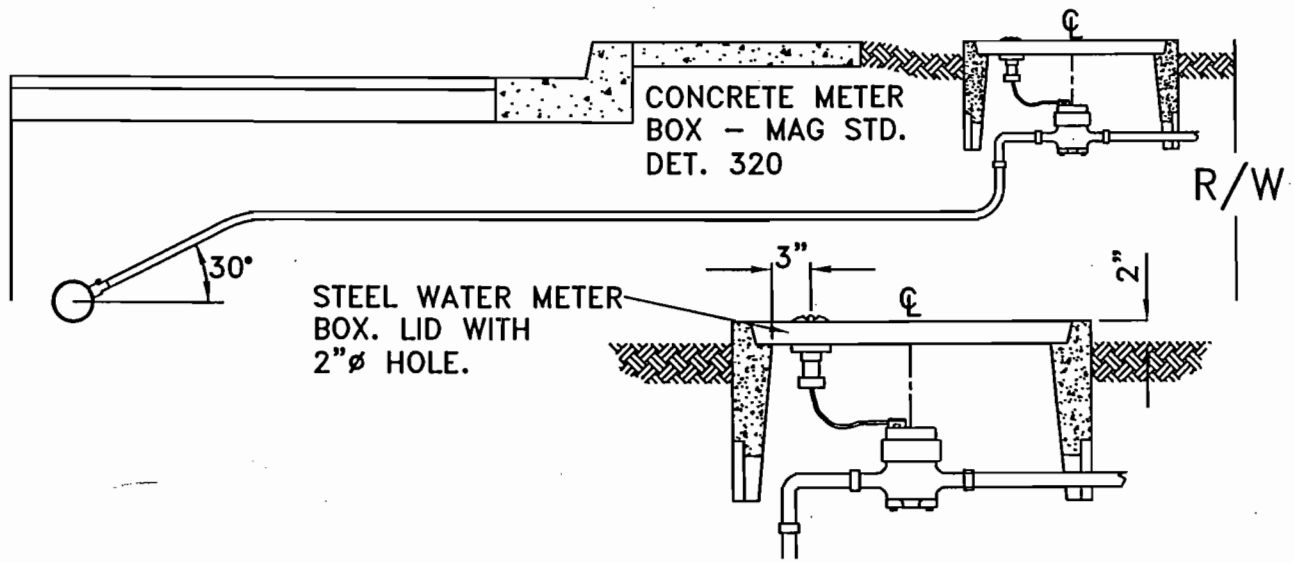

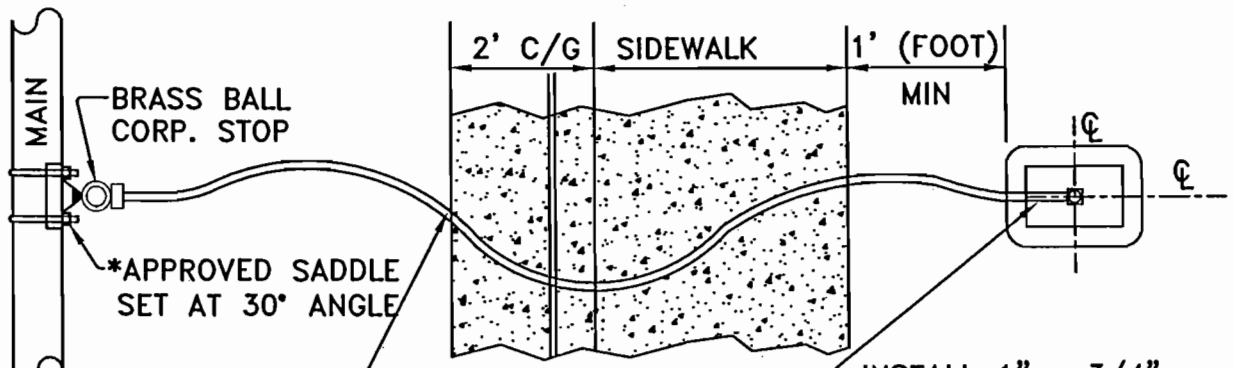

INSTALL 1" x 3/4" BRASS REDUCER FOR ALL 1" SERVICE LINES. ANGLE BRASS BALL CURB STOP TO BE SAME SIZE AS THE SERVICE LINE.

NOTES:

1. 30" MINIMUM COVER IS REQUIRED FOR SERVICE LINES.
2. NO COUPLINGS ALLOWED ON SERVICE LINE.
3. FOR CUL-DE-SAC LOTS ONLY, THE WATER METER SHALL BE PLACED AT THE BACK OF THE SIDEWALK.
4. ALL WATER METER BOXES TO BE LEVEL WITH THE BACK OF THE SIDEWALK.
5. ALLOWABLE SERVICE LINE SIZES: 1", 1-1/2" & 2".
6. ALL MATERIAL SHALL CONFORM TO THE LATEST MAG SPECIFICATIONS.
7. ACCEPTABLE SADDLES INCLUDE: MUELLER: BR2B
   FORD: 202B
   JONES: J979
   A.Y. MCDONALD: 3825

I:\GUIDE\DETAILS\CAD\PE-363

05/29/2007

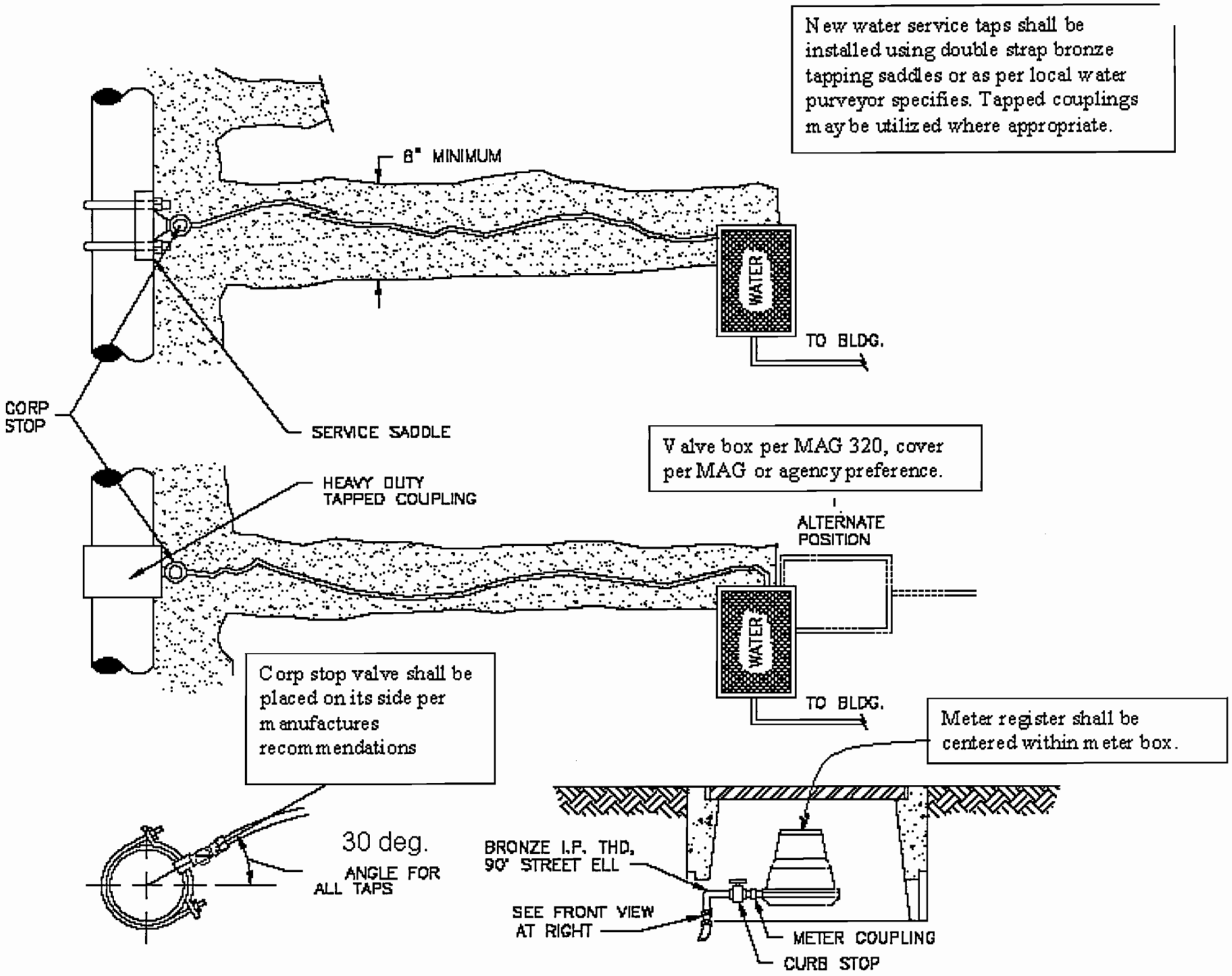
New water service taps shall be installed using double strap bronze tapping saddles or as per local water purveyor specifies. Tapped couplings may be utilized where appropriate.
8" MINIMUM
WATER
TO BLDG.
CORP STOP
SERVICE SADDLE
Valve box per MAG 320, cover per MAG or agency preference.
HEAVY DUTY TAPPED COUPLING
ALTERNATE POSITION
WATER
TO BLDG.
Corp stop valve shall be placed on its side per manufactures recommendations
Meter register shall be centered within meter box.
30 deg.
ANGLE FOR ALL TAPS
BRONZE I.P. THD. 90° STREET ELL
SEE FRONT VIEW AT RIGHT
METER COUPLING
CURB STOP

CASE 07-05

CITY OF PEORIA
STANDARD DETAIL PE-360-1
TWO PORT WET BARREL
FIRE HYDRANT INSTALLATION

APPROVALS:

CITY ENGINEER DATE

UTILITIES DIRECTOR 5/31/07 DATE

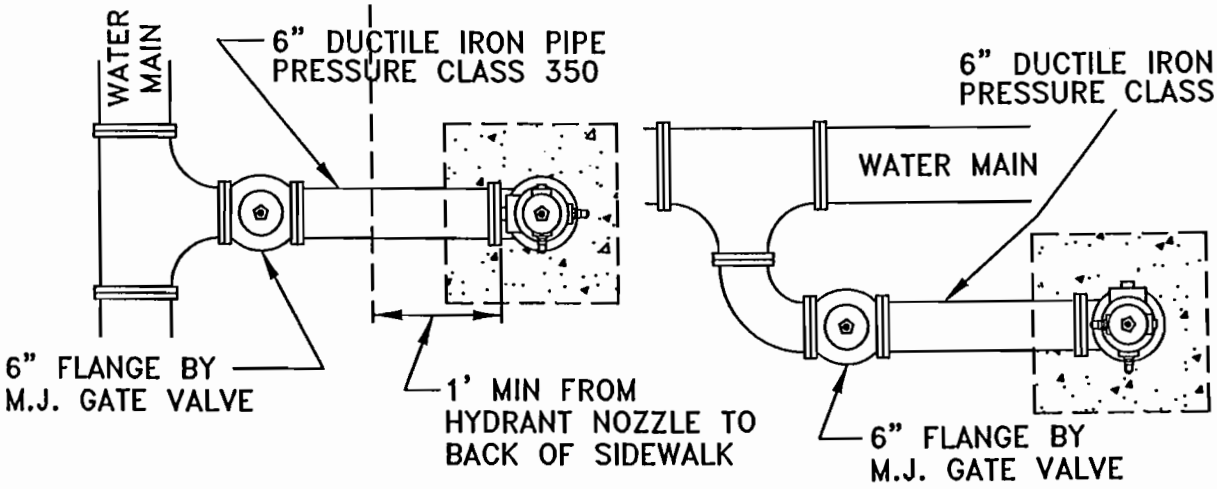

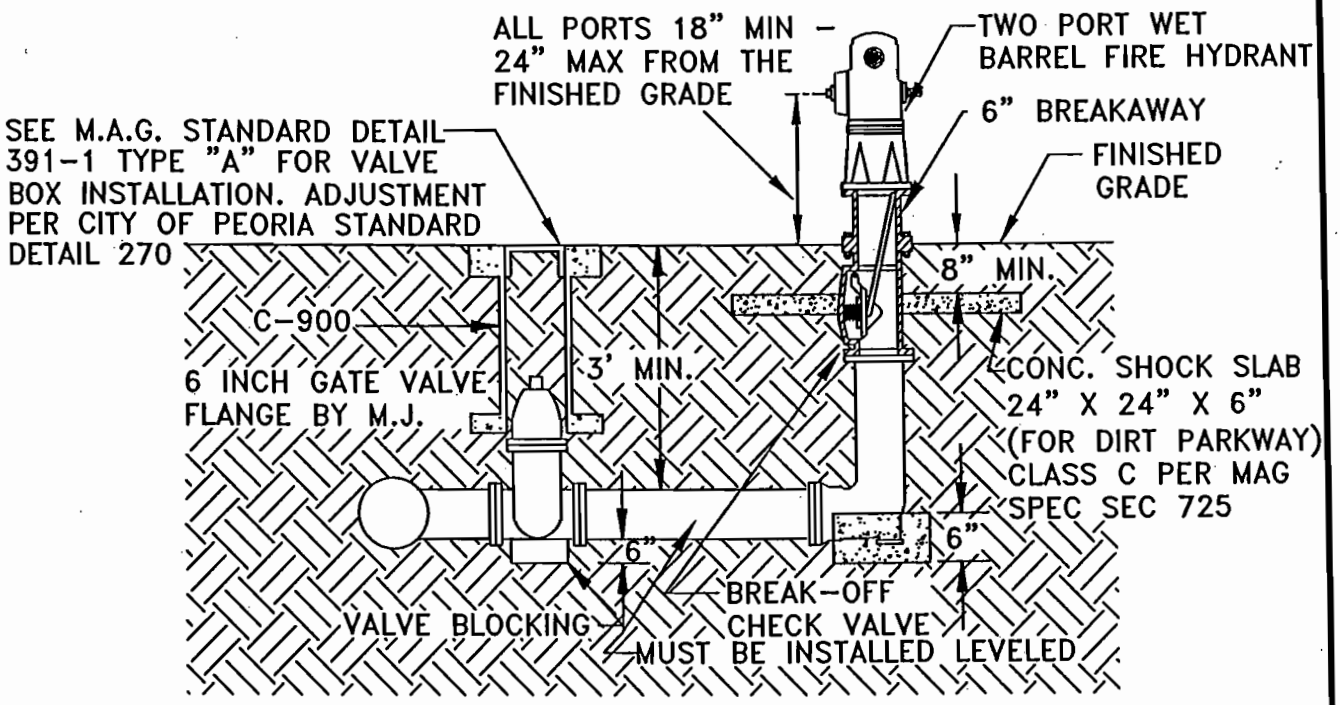

1. ALL JOINTS SHALL BE RESTRAINED.
2. APPROVED HYDRANTS INCLUDE: SEE DETAIL PE-101
3. BREAK-OFF CHECK VALVE SHALL BE LONG BEACH IRON WORKS, INC. - MODEL LB400 OR APPROVED EQUAL.
4. THE 6 INCH GATE VALVE SHALL BE FLANGED BY MECHANICAL JOINT.
5. NO VALVES ARE TO BE IN THE CONCRETE.
6. THE 4 1/2" PORT ON THE HYDRANT SHALL BE INSTALLED FACING THE STREET.
7. MINIMUM 3 FOOT DIAMETER CLEARANCE AROUND HYDRANT.
8. THE HYDRANT SHALL HAVE 1 - 2 1/2" PORT, AND 1 - 4 1/2" PORT.
9. NATIONAL STANDARD THREADS REQUIRED ON ALL CONNECTIONS.
10. INSTALL FIRE HYDRANT MARKER PER PEORIA STANDARD DETAIL 271.

I:\GUIDE\DETAILS\CAD\PE-360-1

05/01/2007

City of Chandler CASE 07-06

indirectly affected by such conflict, error or discrepancy will be at CONTRACTOR'S own risk and CONTRACTOR shall bear all cost arising therefrom.

B. Except as may be otherwise specifically stated in the Contract Documents, the provisions of the Contract Documents shall take precedence in resolving any conflict, error, ambiguity, or discrepancy between the provisions of the Contract Documents and:

1) the provisions of any standard, specification, manual, code or instruction (whether or not specially incorporated by reference in the Contract Documents); or

2) the provisions of any Laws or Regulations applicable to the performance of the Work (unless such an interpretation of the provisions of the Contract Documents would result in violation of such Law or Regulation);

3) provided, however, when any of the Contracts Documents incorporate by reference standards, specifications or other documents, the printed provisions contained in the Contract Documents take precedence over any provisions incorporated by reference.

C. In a case of a discrepancy or conflict, the order in which the various contract documents shall govern is as follows from highest to lowest: Technical Specifications; Plans; Supplementary Conditions (sometimes referred to as Special Conditions); General Conditions; City of Chandler standard specifications and standard details.

D. Figured dimensions on Drawings shall govern, but work not dimensioned shall be as directed. Work not particularly shown or specified shall be the same as similar parts that are shown or specified. Large scale details shall take precedence over smaller scale drawings as to shape and details of construction. Specifications shall govern as to materials and workmanship. The specification calling for higher quality material or workmanship shall prevail.

3.5 Re-Use of Documents

Neither CONTRACTOR nor any Subcontractor, manufacturer, fabricator, supplier or distributor shall have or acquire any title to or ownership rights in any of the Drawings, Specifications or other documents (or copies of any thereof) prepared by or bearing the seal of the Project Designer; and they shall not re-use any of them on extensions of the Project or any other project without written consent of CITY and the Project Designer and specific written verification or adaptation by the Project Designer.

ARTICLE 4 - AVAILABILITY OF LANDS; PHYSICAL CONDITIONS; REFERENCE POINTS

4.1 Availability of Lands

CITY shall furnish, as indicated in the Contract Documents the lands upon which the Work is to be performed, rights-of-way for access thereto, and such other lands which are designated for the use of CONTRACTOR. Easements for permanent structures or permanent changes in existing facilities will be obtained and paid for by CITY, unless otherwise provided in the Contract Documents. If CONTRACTOR believes that any delay in CITY'S furnishing these lands or easements entitles CONTRACTOR to an extension of the Contract Time, CONTRACTOR may make a claim therefor as provided in Article 13. CONTRACTOR shall provide for all additional lands and access thereto that may be required for temporary construction facilities or storage of materials and equipment (marshalling yard).

4.2 Physical Conditions, Investigations and Reports

A. CONTRACTOR is to protect all existing facilities during construction. Utility poles that may be affected by the construction activities shall be protected by the CONTRACTOR.

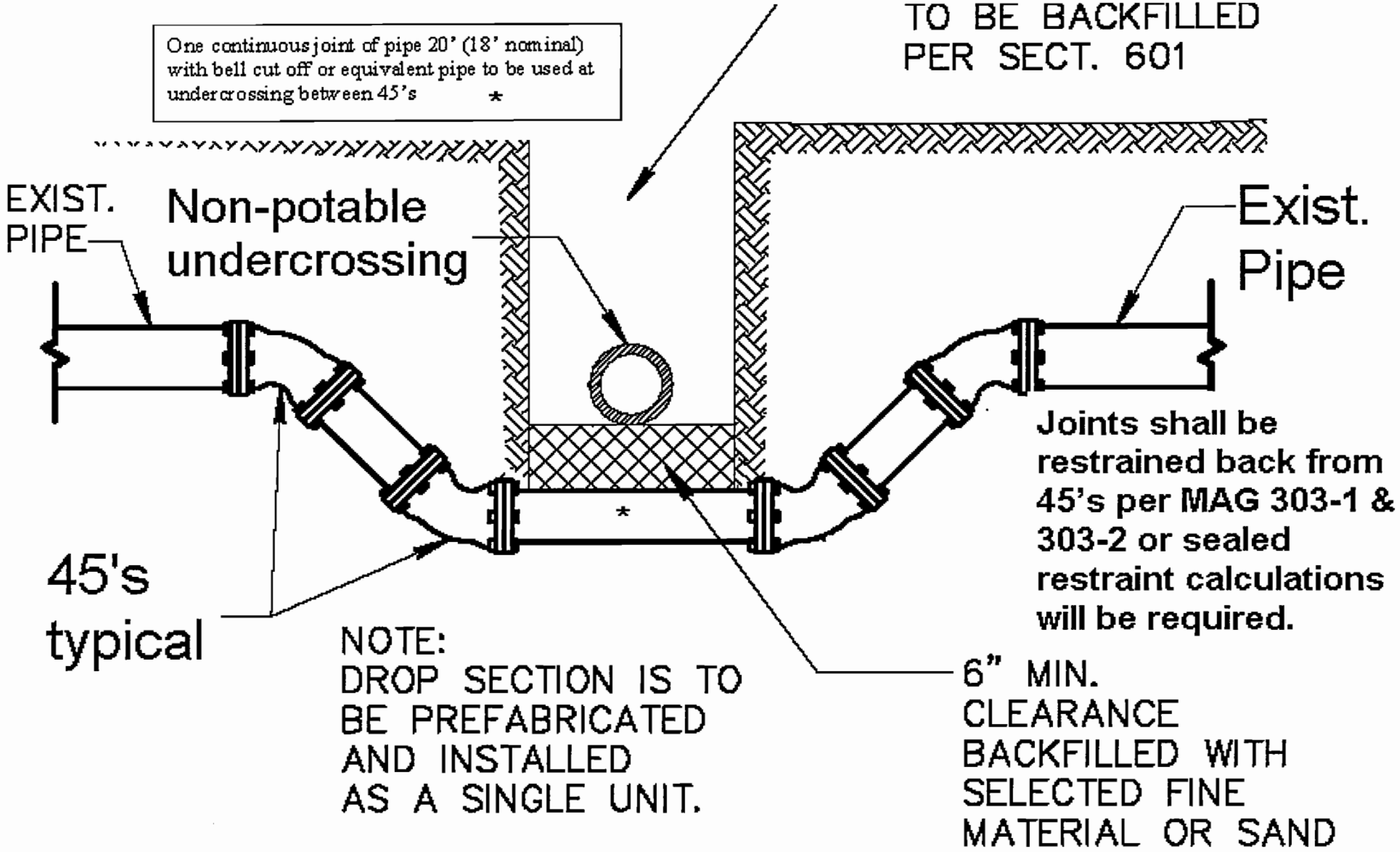

Ductile Iron MECHANICAL JOINT

CASE 07-11

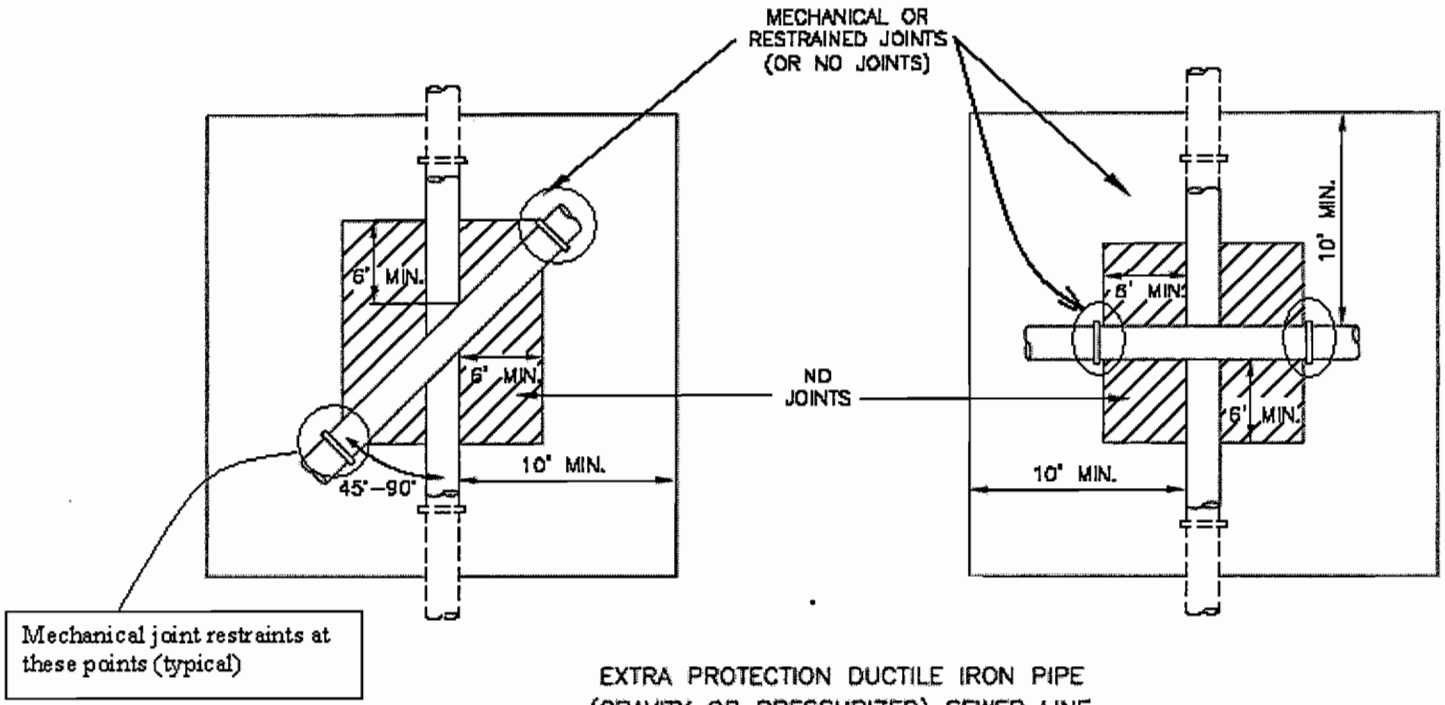

EXTRA PROTECTION DUCTILE IRON PIPE
(GRAVITY OR PRESSURIZED) SEWER LINE

NOTES:

* REFER TO MAG STANDARD SPECIFICATION SECTION 610.

DETAIL NO.				REVISED	DETAIL NO.
404-2	MARICOPA ASSOCIATION of GOVERNMENTS	STANDARD DETAIL ENGLISH	WATER AND SANITARY SEWER SEPARATION/PROTECTION	01-01-2006	404-2

In the above detail it should be made clear that most pipe joints being used now days are 20' (18' nominal) and centering on joint of pipe under or ever the crossing is what is desired. The goal is to have no fittings/couplings which are points of failure as far as cross-contamination under or over the crossing. Also the pipe is to be restrained at the first joint out of the "box".

CASE 07-12