SUPPLEMENTS SUBCOMMITTEE

Details and Spec with 10 or more supplements were chosen to work on first:

## Details

| Detail No. | | |
|---|---|---|
| 200 | Backfill, pavement and surface replacement | Peter Kandaris |
| 210 | Residential speed hump | Jesse Gonzales |
| 234 | Sidewalk ramps, type D (ATTACHMENT 1) HANDED OUT AT MEETING CAN BE DOWNLOADED AT www.mag.maricopa.gov/event.cms?item 6616 | |
| 250 | Driveway entrances | |
| 251 | Return type driveways | |
| 252 | Bus and parking bays | Rod Ramos |
| | Details not supplemental to MAG (SEE ATTACHMENTS 2-5) | David Fern |

## Spec.

| Spec. No. | | |
|---|---|---|
| 107 | Legal regulations and responsibility to public | |
| 109 | Measurement and payment | |
| 301 | Sub grade preparation | Brian Gallimore |
| 321 | Asphalt concrete pavement | Don Green |
| 336 | Pavement matching and surface replacement | Peter Kandaris |
| 342 | Decorative pavement concrete, paving stone or bricks | Rod Ramos |
| 440 | Sprinkler irrigation installation | Tom Kaczamarowski |
| 505/506 | Cone Structures | Bob Herz |
| 601 | Trench excavation | Nebeker/Gonzales |
| 610 | Water line construction | Nebeker/Gonzales |
| 623 | Manhole construction | Nebeker/Gonzales |
| 630 | Tapping sleeves, valves, valve boxes on waterline | Nebeker/Gonzales |
| 631 | Water taps and meter service connection | Nebeker/Gonzales |
| 710 | Asphalt concrete | Don Green |

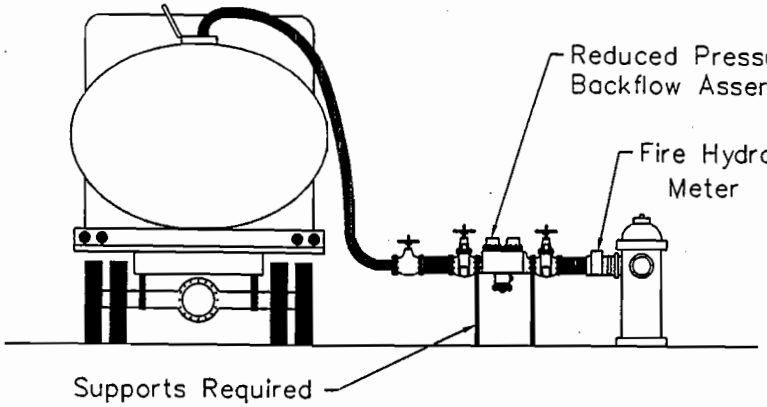


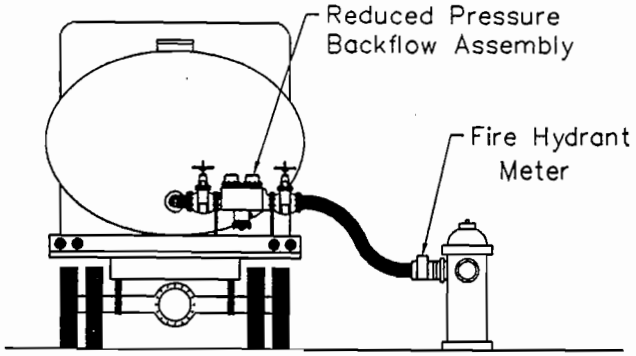


TANK TRUCKS

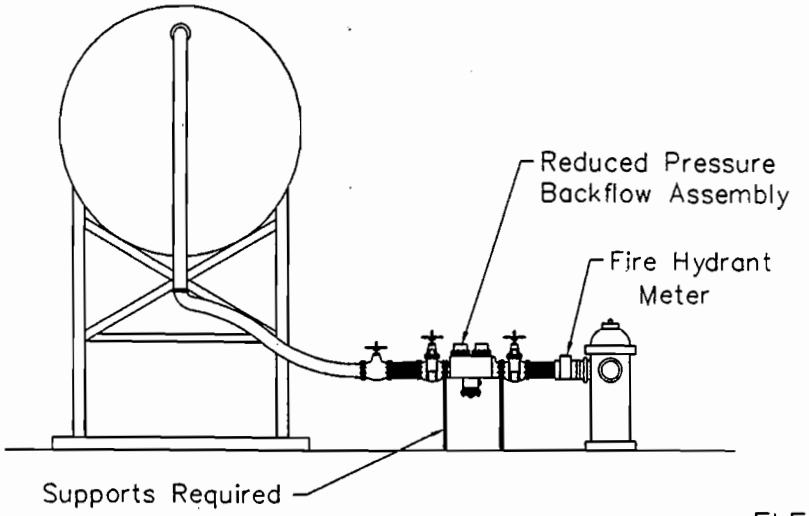


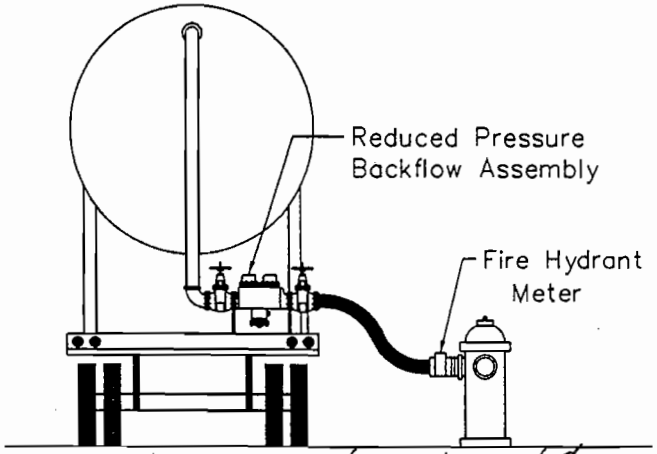


NOTE: Reduced Backflow Device Per Agency Requirements

ELEVATED TANKS

ATTACHMENT 2

| DETAIL NO. | City of Scottsdale Standard Details | APPROVED BY: | BACKFLOW PREVENTION METHOD FOR PORTABLE TANKS WITH NO AIR GAP SEPARATION | DETAIL NO. |
|---|---|---|---|---|
| 2358 | | Scottsdale Standards & Specifications Committee | | 2358 |

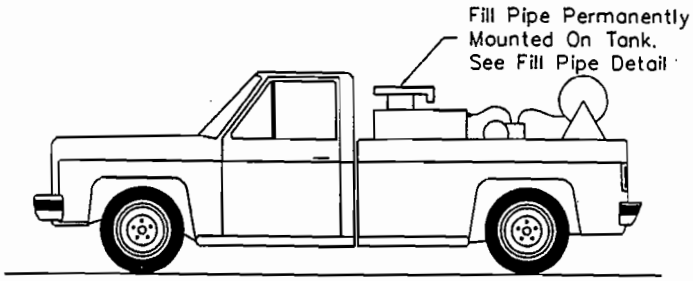


PESTICIDE APPLICATOR TRUCK

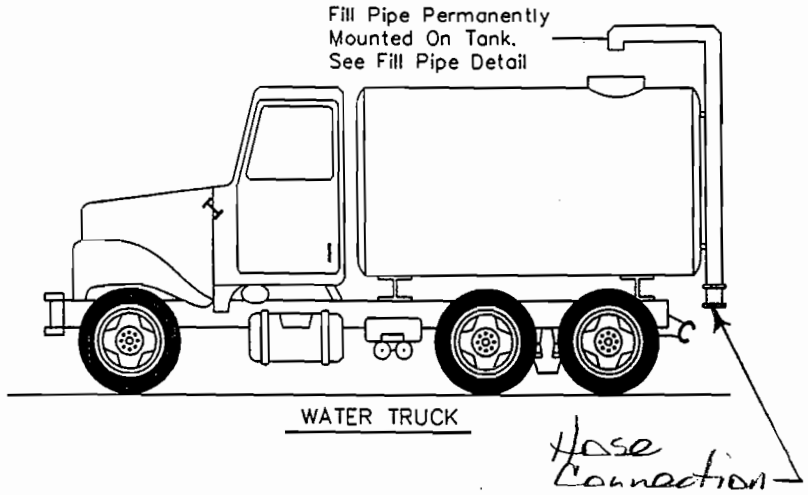


WATER TRUCK

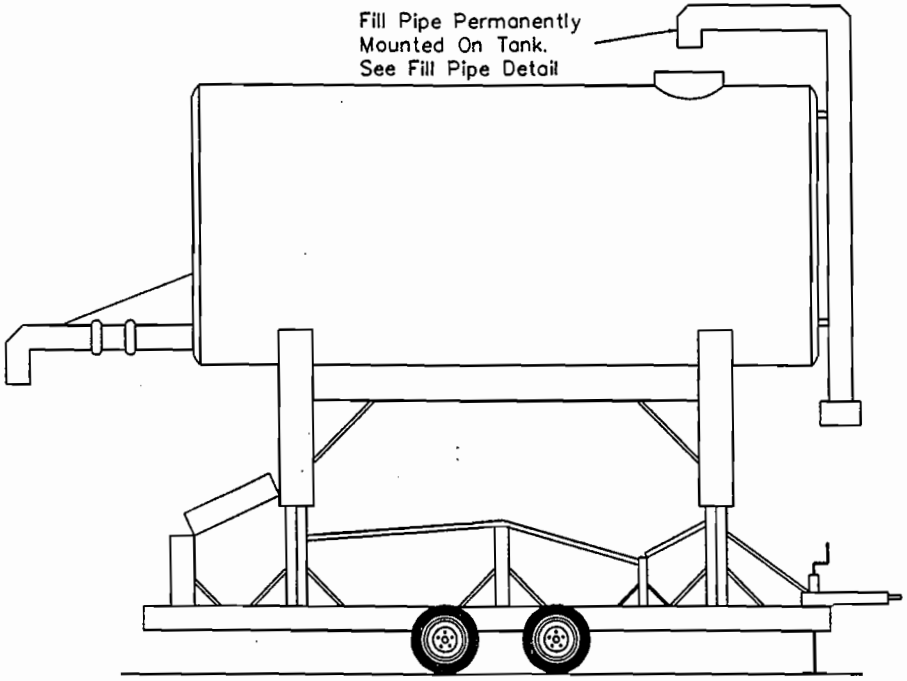


ELEVATED TANK

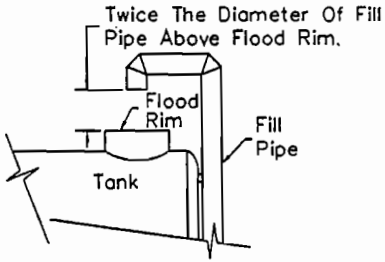


FILL PIPE DETAIL

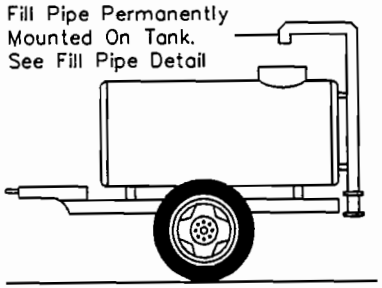


WATER WAGON

| DETAIL NO. | City of Scottsdale Standard Details | APPROVED BY: Scottsdale Standards & Specifications Committee | FILL PIPE DETAILS FOR PORTABLE TANKS WITH AIR GAP SEPARATION | DETAIL NO. |
|---|---|---|---|---|
| 2357 | | | | 2357 |

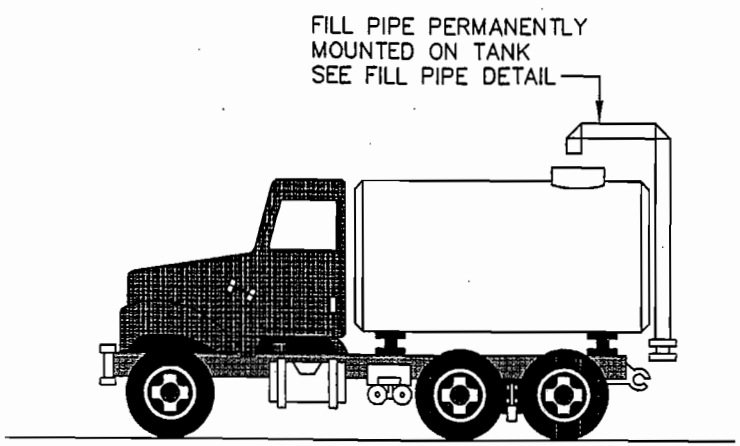


WATER TRUCK

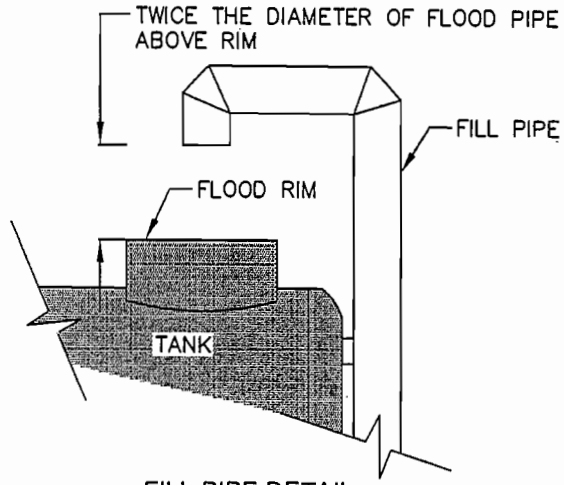


FILL PIPE DETAIL

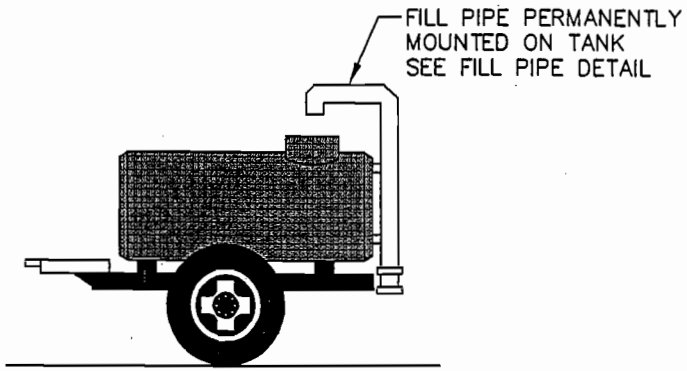


WATER WAGON

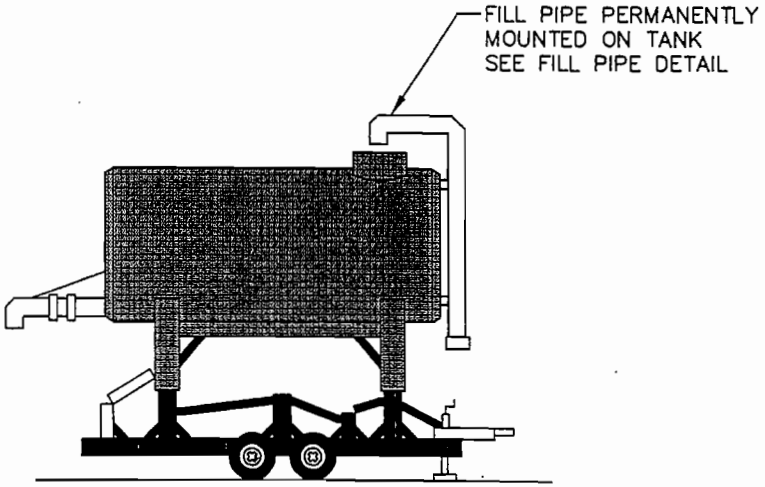


ELEVATED TANK

AIR GAP BACKFLOW PROTECTION FOR WATER TANKS

DETAIL NO.
M-37.2

REV. 07/01/02

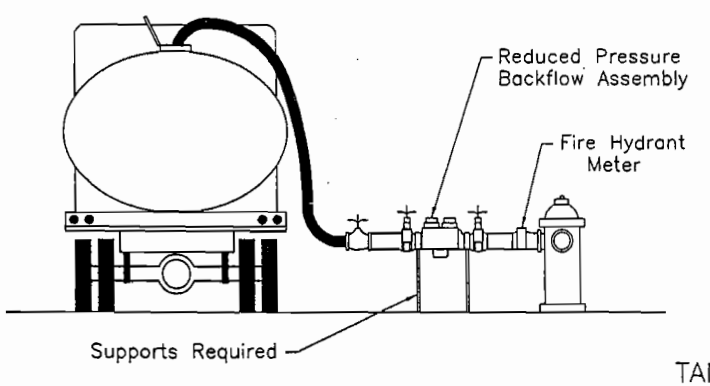


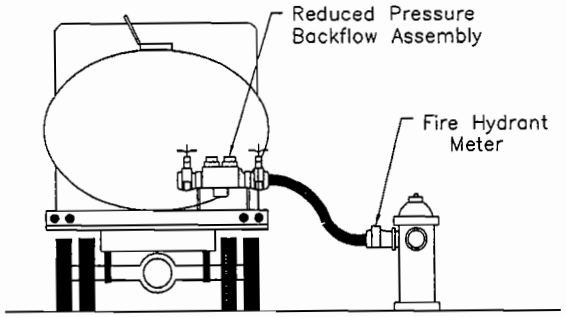


TANK TRUCKS

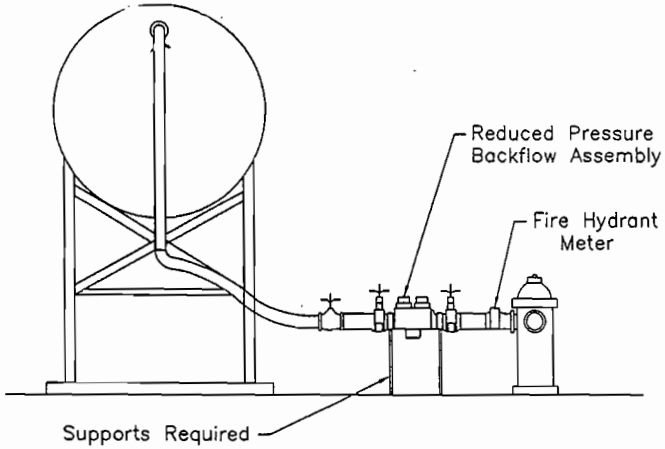


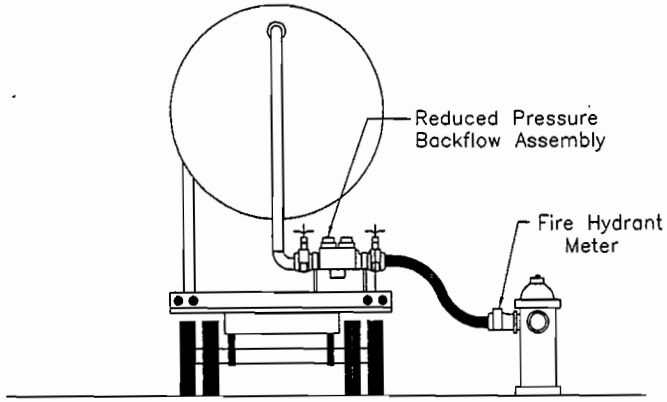


ELEVATED TANKS

| DETAIL NO. | CITY OF GOODYEAR STANDARD DETAIL | APPROVED BY: Goodyear Standards and Policies Committee 7/97 | BACKFLOW PREVENTION METHOD FOR PORTABLE TANKS WITH NO AIR GAP SEPARATION | DETAIL NO. |
|---|---|---|---|---|
| G-3361 | | | | G-3361 |

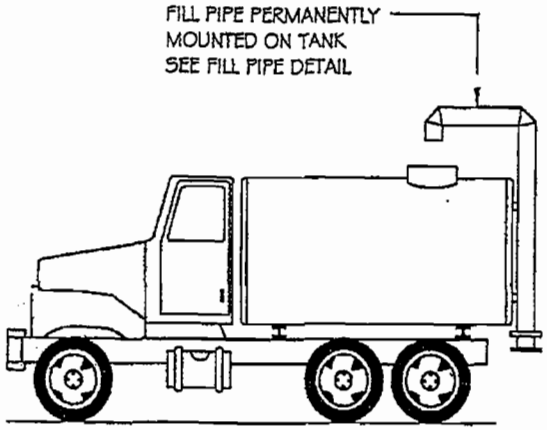


WATER TRUCK

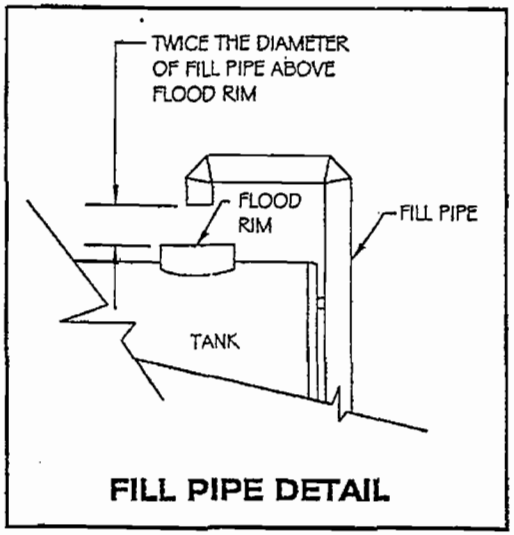


FILL PIPE DETAIL

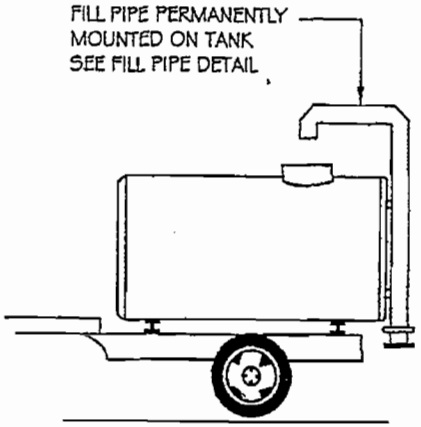


WATER WAGON

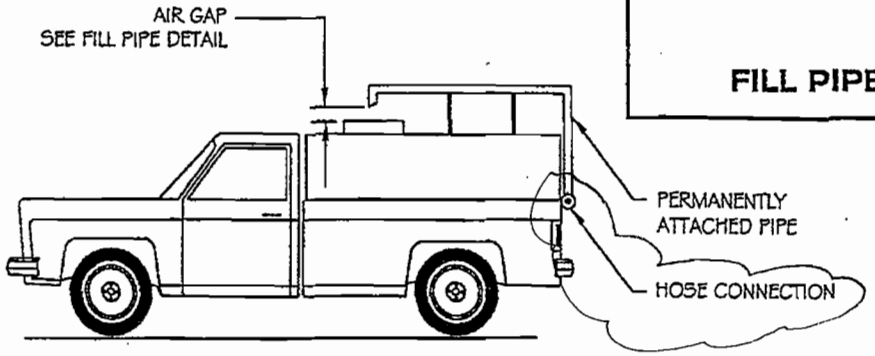


WATER TRUCK

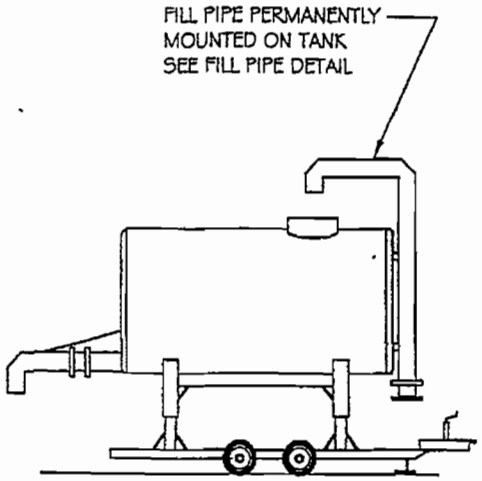


ELEVATED TANK

| | | | | |
|---|---|---|---|---|
| C-108<br>REPLACES<br>95 | CITY OF CHANDLER STANDARD DETAIL | AIR GAP BACKFLOW PROTECTION FOR WATER TANKS | APPROVED: CITY ENGINEER<br>DATE: 11-19-99 | DETAIL NO.<br>C-108<br>NTS |

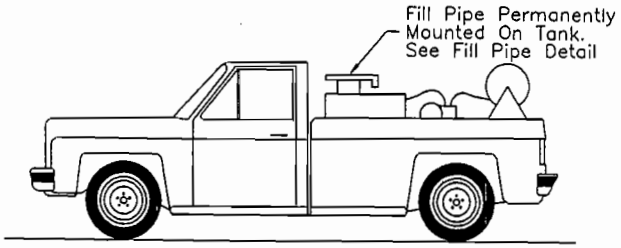


PESTICIDE APPLICATOR TRUCK

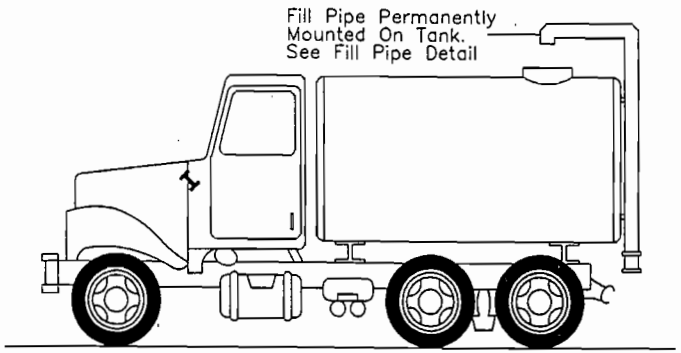


WATER TRUCK

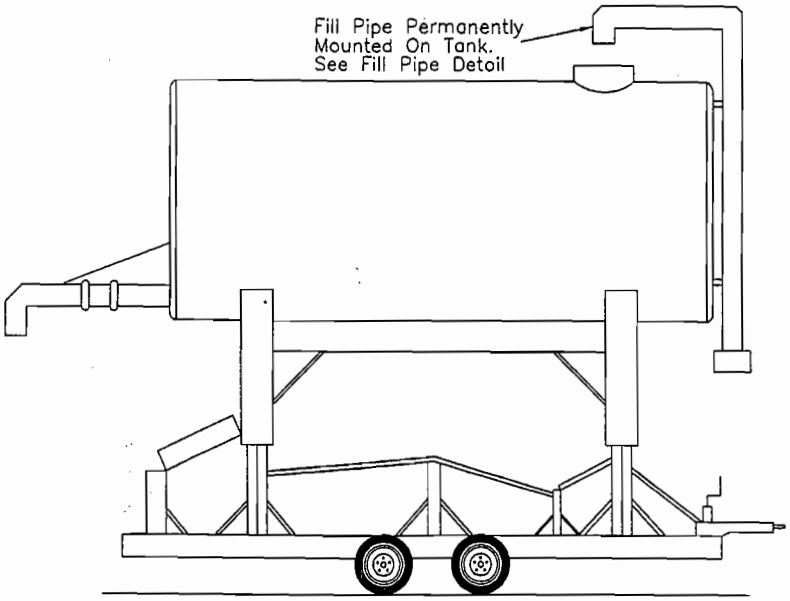


ELEVATED TANK

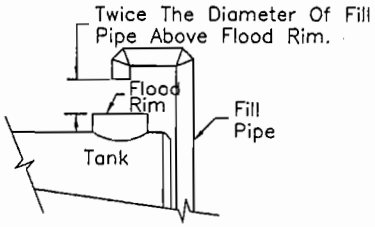


FILL PIPE DETAIL

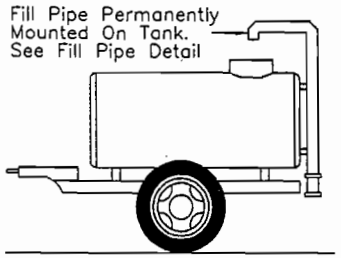


WATER WAGON

| DETAIL NO. G-3360 | CITY OF GOODYEAR STANDARD DETAIL | APPROVED BY: Goodyear Standards and Policies Committee 7/97 | FILL PIPE DETAILS FOR PORTABLE TANKS WITH AIR GAP SEPARATION | DETAIL NO. G-3360 |
|---|---|---|---|---|

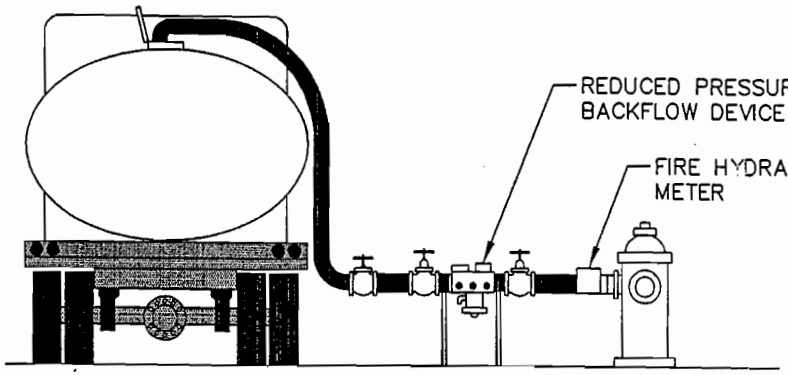


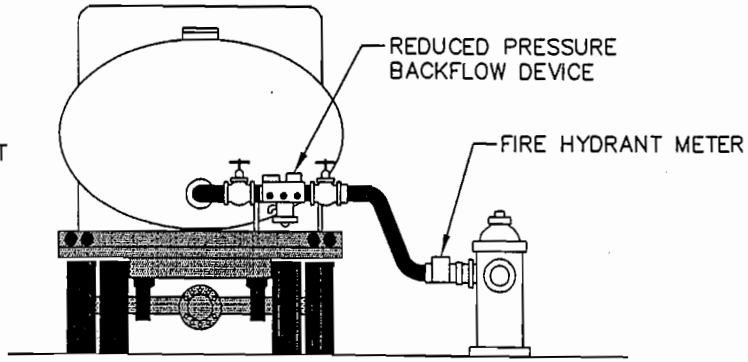


NOTE:
REDUCED PRESSURE BACKFLOW DEVICE SHALL BE SUPPLIED BY THE CONTRACTOR FROM A LIST SUPPLIED BY THE CITY OF MESA.

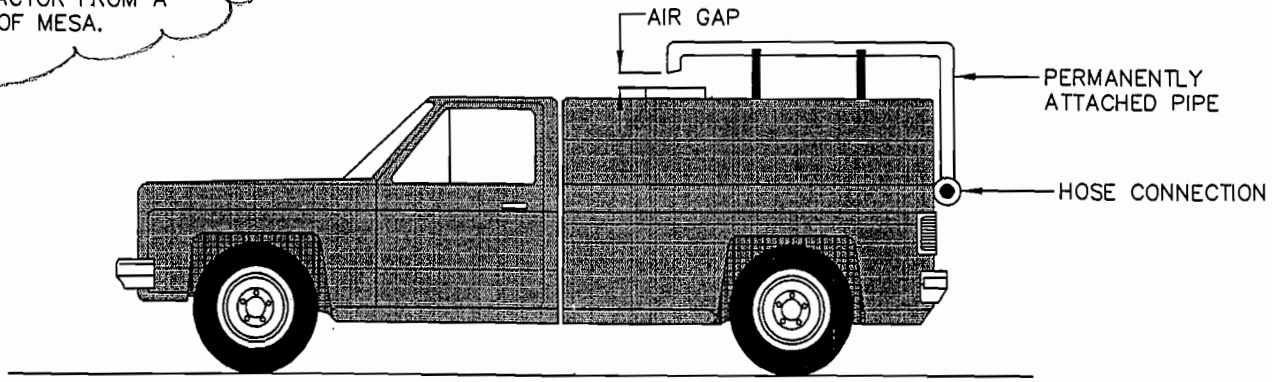


# BACKFLOW PROTECTION FOR TANK TRUCKS

DETAIL NO.
M-37.1

REV. 07/01/02

One Mesa Detail combined w/ Eval. City Notation in Chandler For Hazard Markers

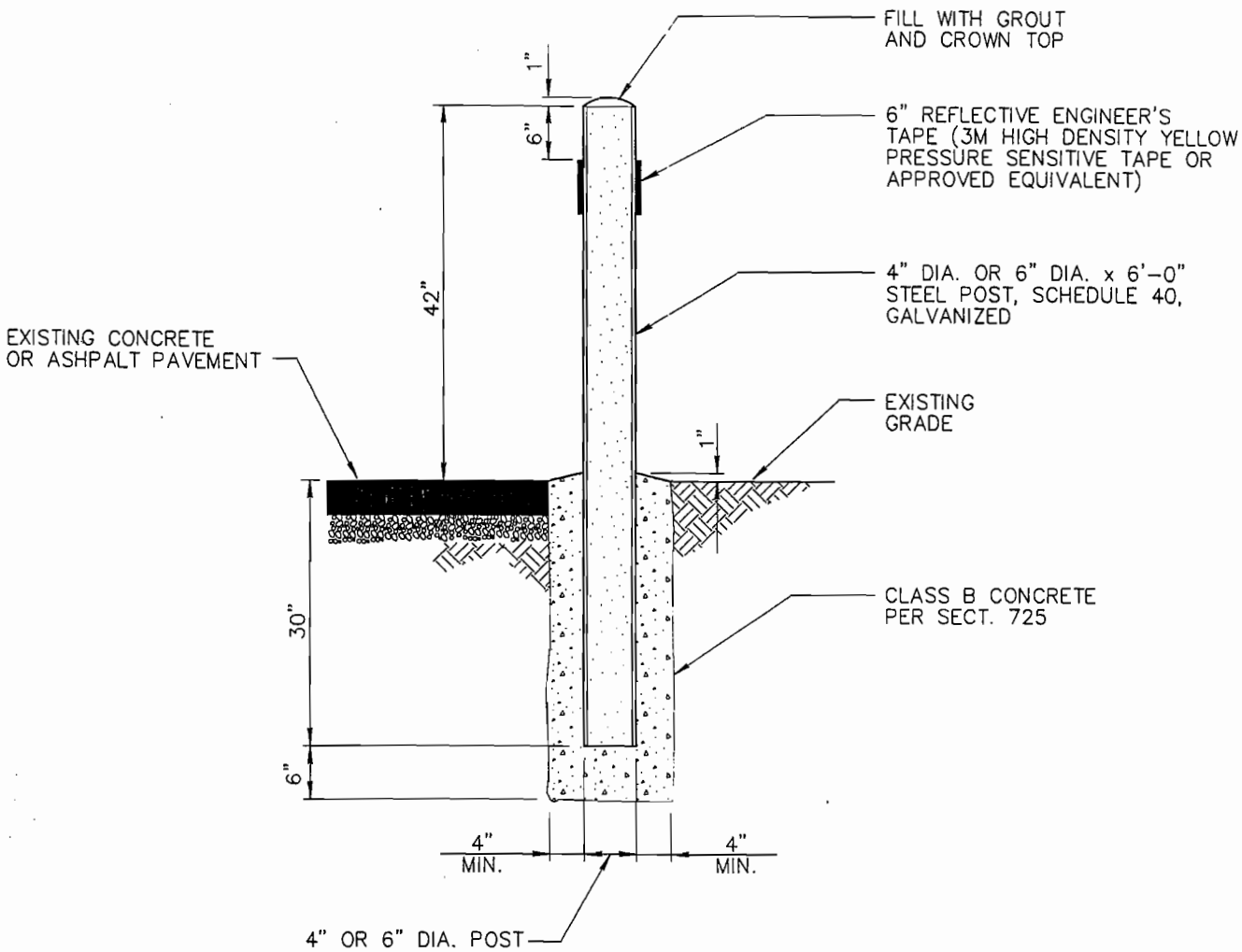


SAFETY POST SECTION

ATTACHMENT 3

| DETAIL NO. | | | REVISED | DETAIL NO. |
|---|---|---|---|---|
| 140 | MARICOPA ASSOCIATION of GOVERNMENTS STANDARD DETAIL ENGLISH | SAFETY POST | | 140 |

NOTES

1. TRASH AND RECYCLING BIN AREA SHALL BE SCREENED WITH A SIX FOOT (6') MASONRY WALL PER DETAIL ON THIS SHEET.
2. BIN ENCLOSURE TO BE A MINIMUM OF 3 FEET FROM ANY PLANNED OR EXISTING STRUCTURE AT ITS CLOSEST POINT.
3. BINS THAT ARE VISIBLE FROM A PUBLIC ROADWAY SHALL HAVE ENCLOSURE GATES THAT SCREEN THE BINS FROM PUBLIC VIEW.
4. GATES SHALL BE INSTALLED SO THERE IS A NET BIN ENCLOSURE OPENING OF 12 FEET PER BIN. GATES, HINGES, AND MOUNTING HARDWARE SHALL NOT INTRUDE UPON MINIMUM NET ENCLOSURE OPENING.
5. GATES, HINGES, AND MOUNTING HARDWARE SHALL BE INSTALLED SO THERE IS A MINIMUM 9 FOOT DEPTH CREATED WITHIN EACH ENCLOSURE.
6. EACH ENCLOSURE GATE SHALL HAVE DROP PINS INSTALLED AND HOLES DRILLED IN THE CONCRETE AT BOTH THE OPEN AND CLOSED POSITIONS TO PREVENT GATES FROM CLOSING INTO THE COLLECTION VEHICLE.
7. BIN ENCLOSURES SHALL HAVE (2) 4" DIAMETER STEEL SAFETY POSTS INSTALLED IN THE BACK OF THE ENCLOSURE ONLY PER DETAIL ON THIS SHEET.
8. SAFETY POSTS SHALL HAVE A HEIGHT OF 6 FEET OR BE EQUAL TO THE HEIGHT OF THE BACK SCREEN WALL OF THE ENCLOSURE. SAFETY POSTS SHALL BE PLACED A MINIMUM OF 4" FROM THE WALL.
9. USE CLASS "A" CONCRETE AS PER SECTION 725 EXCEPT AS NOTED IN SAFETY POST DETAIL ON THIS SHEET.
10. STEEL REINFORCEMENT SHALL BE GRADE 40.
11. EXPANSION JOINT FILLER SHALL BE 1/2" BITUMINOUS TYPE PREFORMED EXPANSION JOINT FILLER ASTM D-1751.
12. EXTERIOR FINISH OF 6 FOOT MASONRY SCREEN WALLS SHALL BE COORDINATED ARCHITECTURALLY WITH PRIMARY BUILDING FINISHES.
13. SOIL BELOW THE WALL FOOTER AND CONCRETE PAD SHALL BE COMPACTED TO A DEPTH OF 6 INCHES AND TO A MINIMUM DRY DENSITY OF 90% IN ACCORDANCE WITH ASTM D-2922 AND D-3017, AFTER ADJUSTMENT FOR ROCK CORRECTION.
14. STANDARDS FOR SOLID WASTE VEHICLE ACCESS ARE ADDRESSED IN M-62.1.
15. STANDARDS FOR SINGLE, DOUBLE, AND TRIPLE-WIDE BIN ENCLOSURES ARE ADDRESSED IN M-62.2 AND M-62.3.

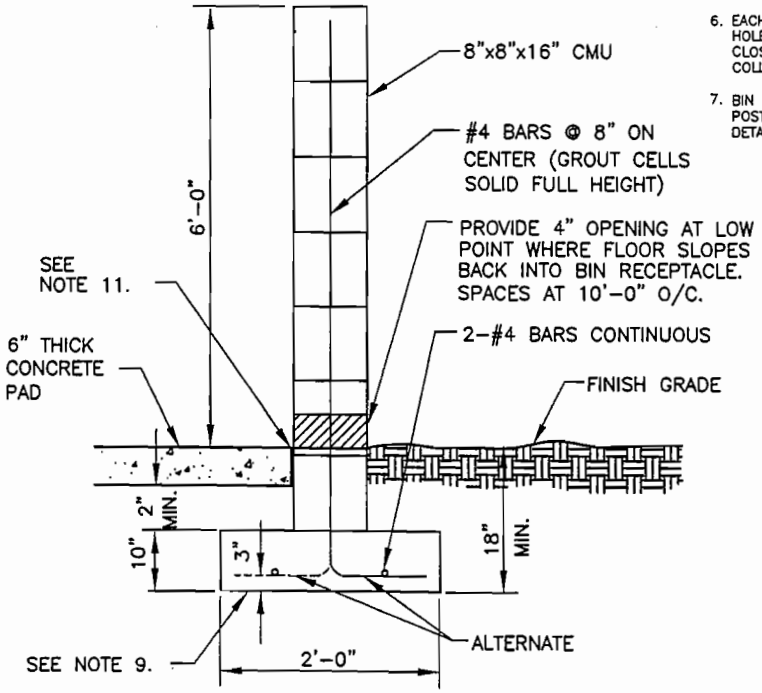


6-FOOT MASONRY SCREEN WALL
N.T.S.

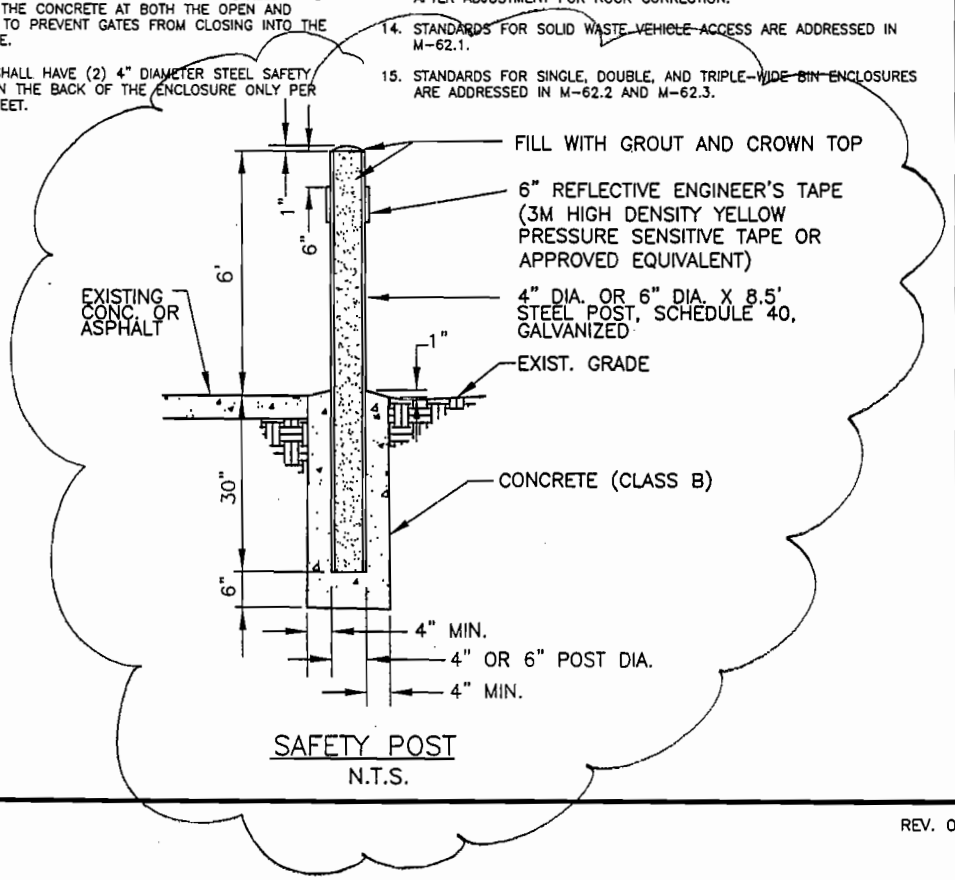


SAFETY POST
N.T.S.

BIN ENCLOSURE SCREEN WALL, SAFETY POST, & GATE STANDARDS

DETAIL NO. M-62.4

REV. 07/01/02

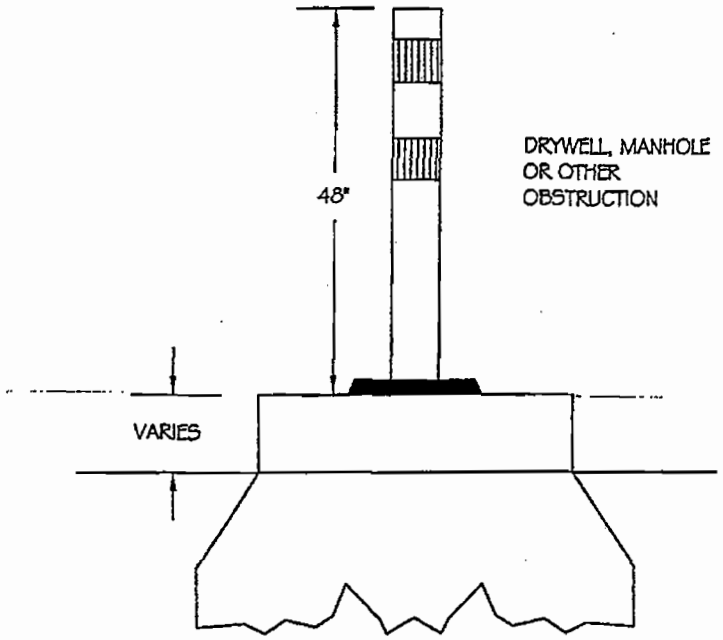


**RAISED OBSTRUCTIONS**

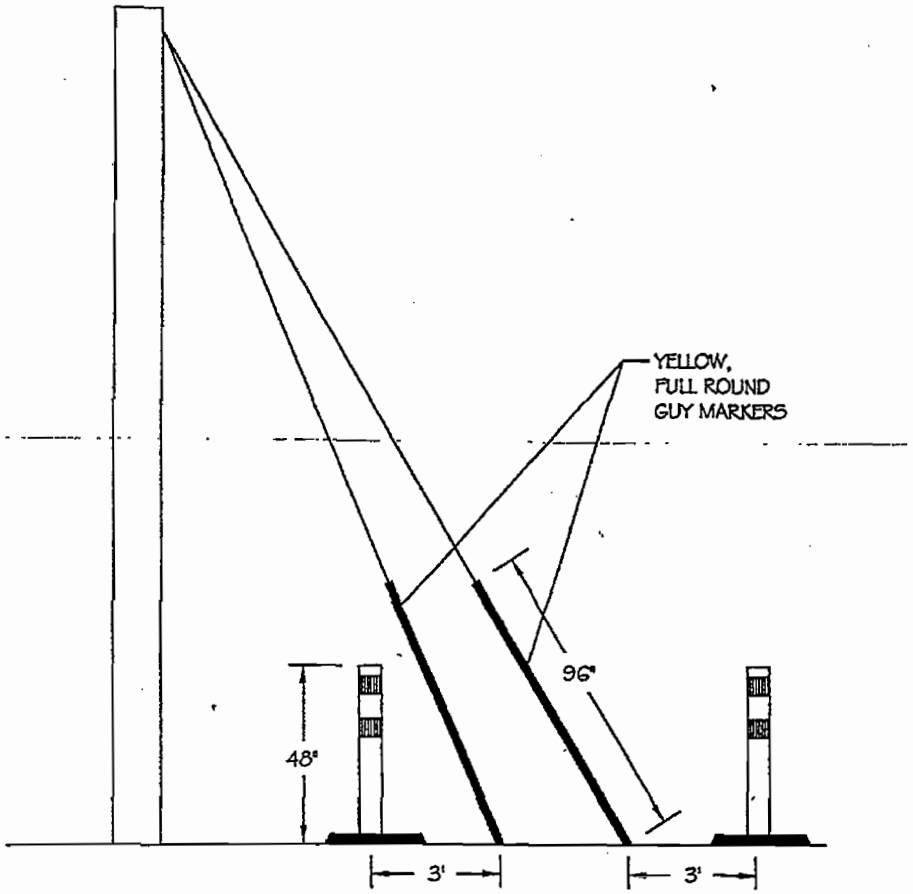


**DOWN GUY WIRES**

NOTES:

1. HAZARD MARKERS SHALL BE INSTALLED WHEN AN OBSTRUCTION MAY POSE A HAZARD TO MOTORIZED VEHICLES, MOWING EQUIPMENT, PEDESTRIANS, MAINTENANCE OPERATIONS OR AS DIRECTED BY THE ENGINEER.
2. HAZARD MARKERS SHALL MEET THOSE SPECIFICATIONS AS SHOWN IN C.O.C. STANDARD DETAIL NO. C-101 OR NO. C-102.
3. C.O.C. DETAIL NO. C-102 MAY BE USED AROUND RAISED OBSTRUCTIONS AS AN ALTERNATE; HOWEVER, THREE (3) MARKERS MUST BE PLACED AT 120° INTERVALS AROUND THE OBSTRUCTION.

| | | | | |
|---|---|---|---|---|
| **C-100**<br>**REPLACES**<br>**62** | CITY OF CHANDLER STANDARD DETAIL | **HAZARD MARKER PLACEMENT** | APPROVED: Bryan D. Patterson<br>CITY ENGINEER<br>DATE: 11-19-99 | DETAIL NO.<br>**C-100**<br>NTS |

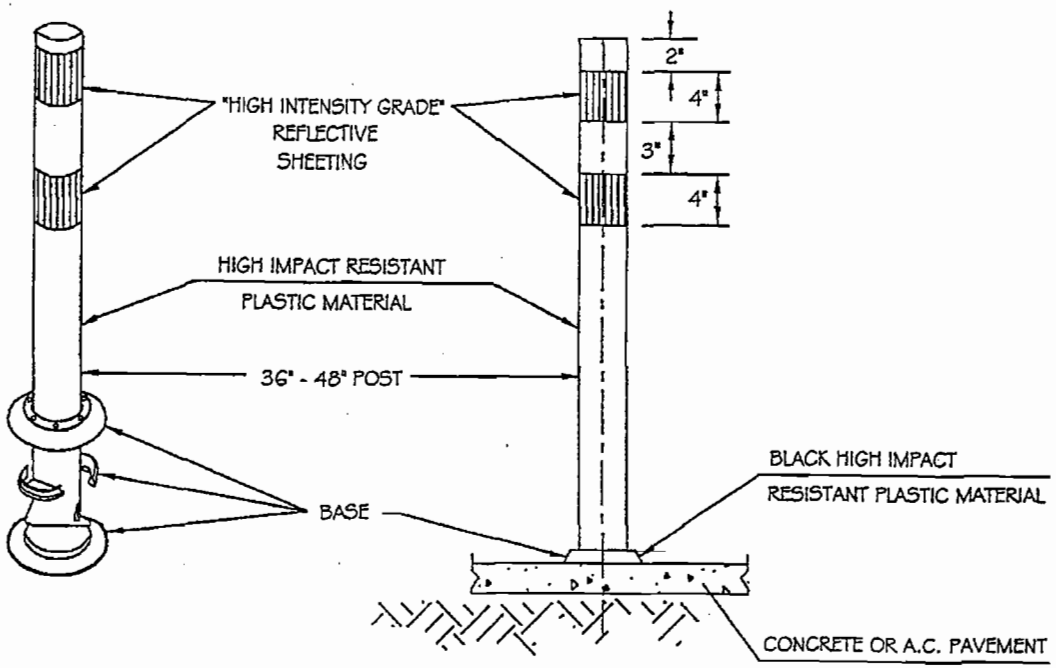


NOTES:

1. CONTRACTOR SHALL CLEAN ROADWAY SURFACE PRIOR TO PLACEMENT OF FLEXIBLE TUBULAR MARKER.
2. FLEXIBLE TUBULAR MARKERS SHALL BE INSTALLED WITH AN ADHESIVE AS PER TUBULAR MARKER MANUFACTURER'S SPECIFICATIONS.
3. YELLOW TUBULAR MARKERS SHALL HAVE A YELLOW POST AND YELLOW "HIGH INTENSITY GRADE" REFLECTIVE SHEETING. ORANGE TUBULAR MARKERS SHALL HAVE AN ORANGE POST AND WHITE HIGH INTENSITY REFLECTIVE SHEETING.
4. POST SHALL BE FLEXIBLE, HIGH IMPACT RESISTANT PLASTIC MATERIAL.
5. BASE SHALL BE CEMENTED TO SURFACE WITH EPOXY MATERIAL AS RECOMMENDED BY THE MANUFACTURER.

| | | | | |
|---|---|---|---|---|
| **C-101**<br>**REPLACES**<br>**63** | CITY OF CHANDLER STANDARD DETAIL | **HAZARD MARKER** | APPROVED: Brian D. Patterson<br>CITY ENGINEER<br>DATE: 11-19-99 | DETAIL NO.<br>**C-101**<br>NTS |

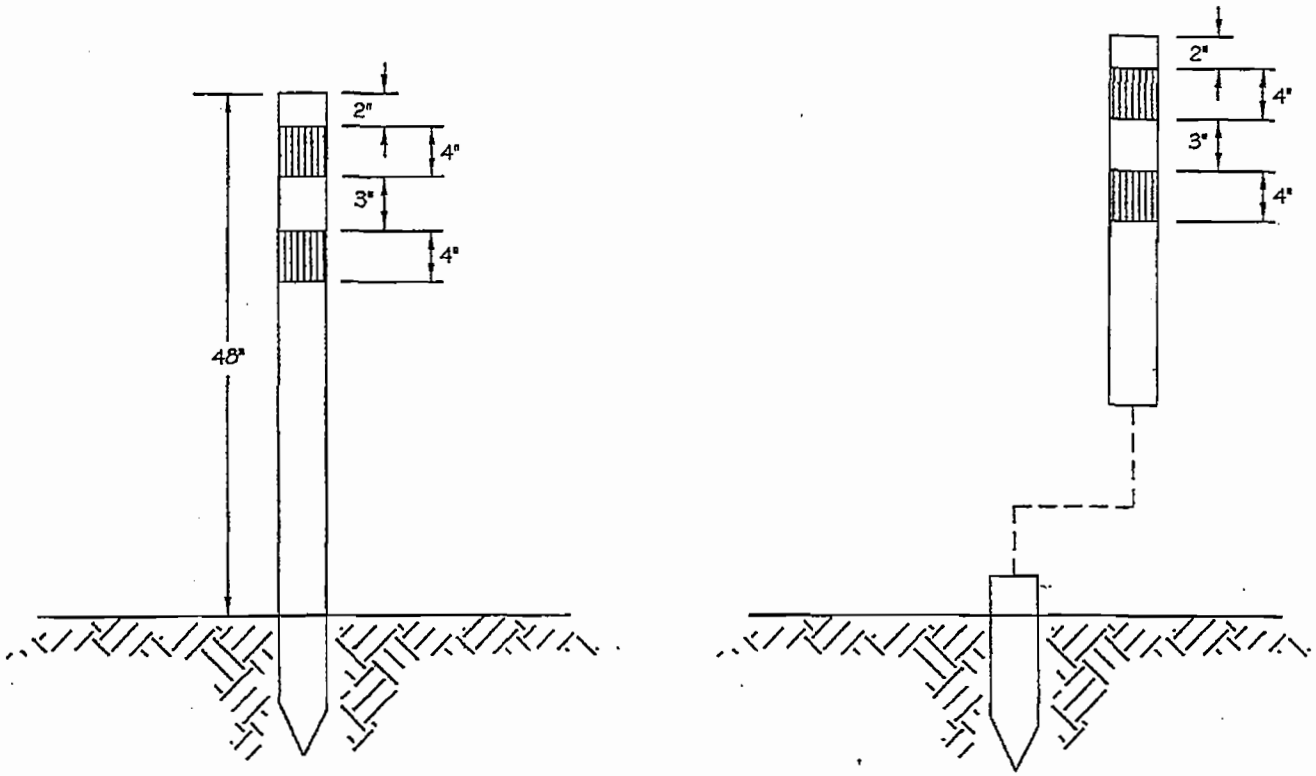


NOTES:

1. YELLOW TUBULAR MARKERS SHALL HAVE A YELLOW POST AND YELLOW "HIGH INTENSITY GRADE" REFLECTIVE SHEETING. ORANGE TUBULAR MARKERS SHALL HAVE AN ORANGE POST AND WHITE HIGH INTENSITY REFLECTIVE SHEETING.
2. POST SHALL BE FLEXIBLE, HIGH IMPACT RESISTANT PLASTIC MATERIAL.

| | | | | | |
|---|---|---|---|---|---|
| C-102<br>REPLACES<br>64 | CITY OF CHANDLER STANDARD DETAIL | HAZARD MARKER<br>SOIL ANCHOR | APPROVED: CITY ENGINEER<br>DATE: 11-19-99 | DETAIL NO.<br>C-102<br>NTS |

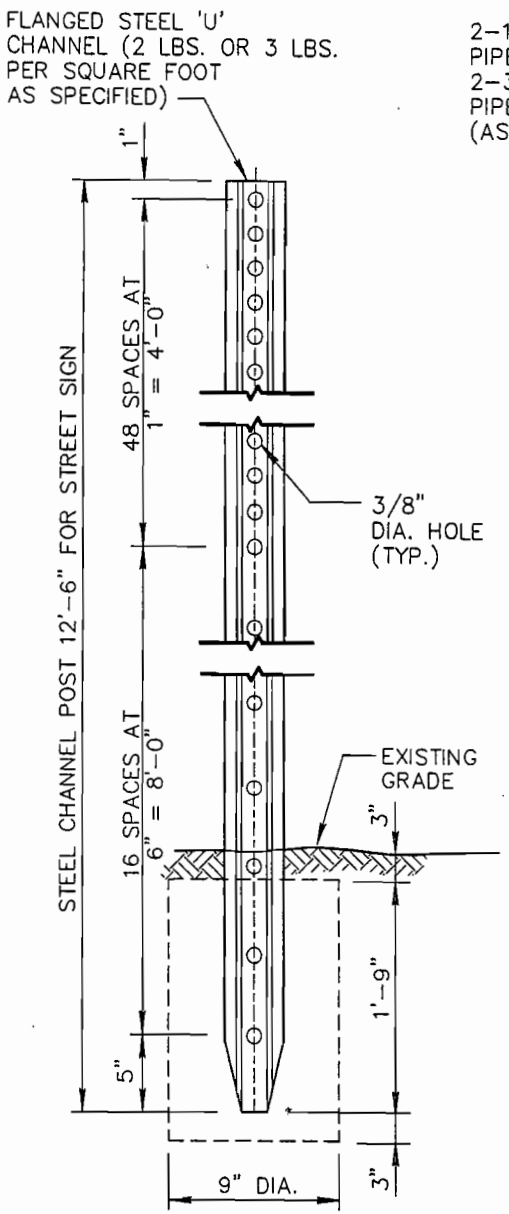


TYPE 'A'

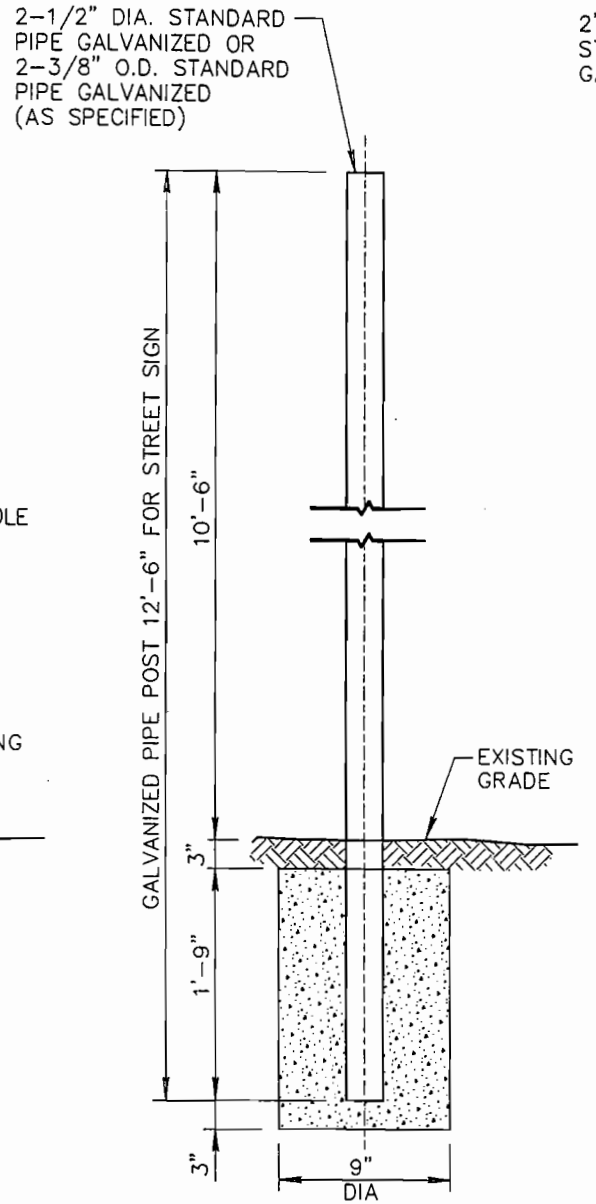


TYPE 'B'

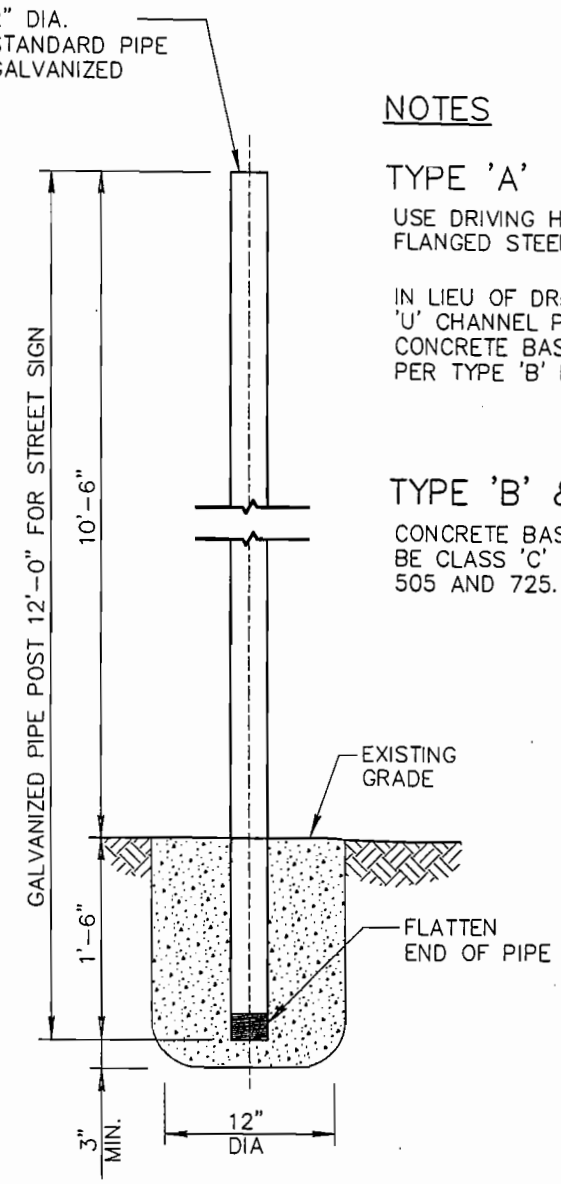


TYPE 'C'

## NOTES

### TYPE 'A'

USE DRIVING HEAD FOR DRIVING ALL FLANGED STEEL 'U' CHANNEL POSTS.

IN LIEU OF DRIVING FLANGED STEEL 'U' CHANNEL POSTS MAY BE SET IN CONCRETE BASE FOUNDATION AS PER TYPE 'B' BASE.

### TYPE 'B' & TYPE 'C'

CONCRETE BASE FOUNDATIONS SHALL BE CLASS 'C' CONCRETE AS PER SECT. 505 AND 725.

ATTACHMENT 4

| DETAIL NO. | | | | REVISED | DETAIL NO. |
|---|---|---|---|---|---|
| 131 | MARICOPA ASSOCIATION of GOVERNMENTS | STANDARD DETAIL ENGLISH | STREET SIGN BASE | | 131 |

REVISED 1/3/94

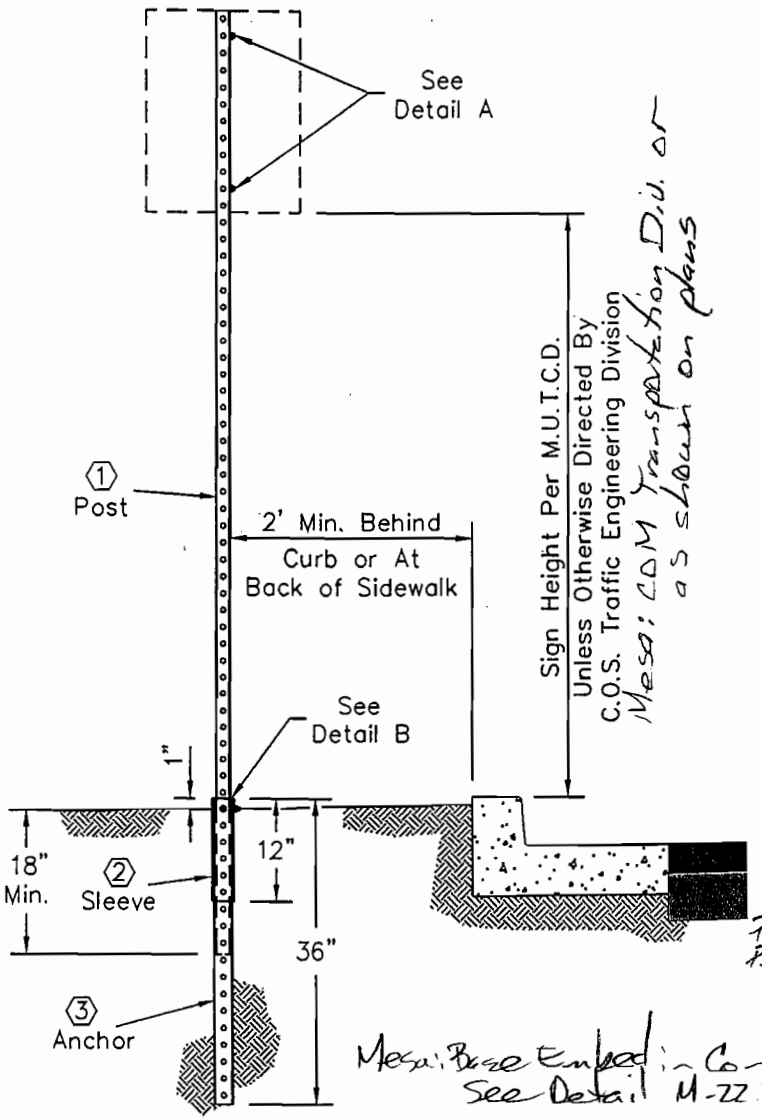


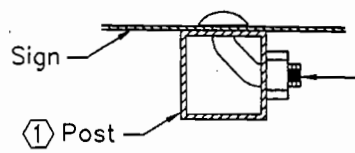


Mesa 1 1/32" x 3 1/32" Thread by... Peoria

1 11/32" x 31/32" Thrd x 5/16" ø Corner Bolt With 5/16" Self Locking Nut

**Detail A**
**Sign Mounting**

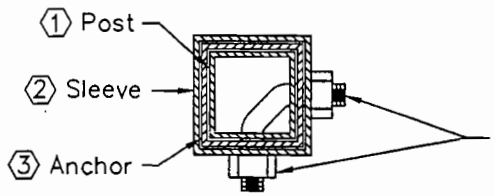


Mesa

1 9/16" x 1 3/16" Thrd ~~Each End~~ x 5/16" ø Corner Bolt With 5/16" Self Locking Nuts

**Detail B**
**Anchor Assembly**

## Legend

1 Post – 1-3/4" x 1-3/4" Square Perforated 0.105" Galvanized Steel Tubing (Green Finish)

2 Sleeve – 2-1/4" x 2-1/4" x 12", Square Perforated 0.105 Galvanized Steel Tubing (Green Finish)

3 Anchor – 2" x 2" x 36", Square Perforated 0.105" Galvanized Steel Tubing (Green Finish)

Peoria: Per COS Specs

Mesa: Up to 2000 in² sign face vs. 2000 in² sign face table

NOTE:

1. Sign Post, Sleeve And Anchor Per COS Supplemental Spec. Section 402.3

| DETAIL NO. | City of Scottsdale Standard Details | APPROVED BY: Scottsdale Standards & Specifications Committee | SIGN POST INSTALLATION | DETAIL NO. |
|---|---|---|---|---|
| 2131 | | | | 2131 |

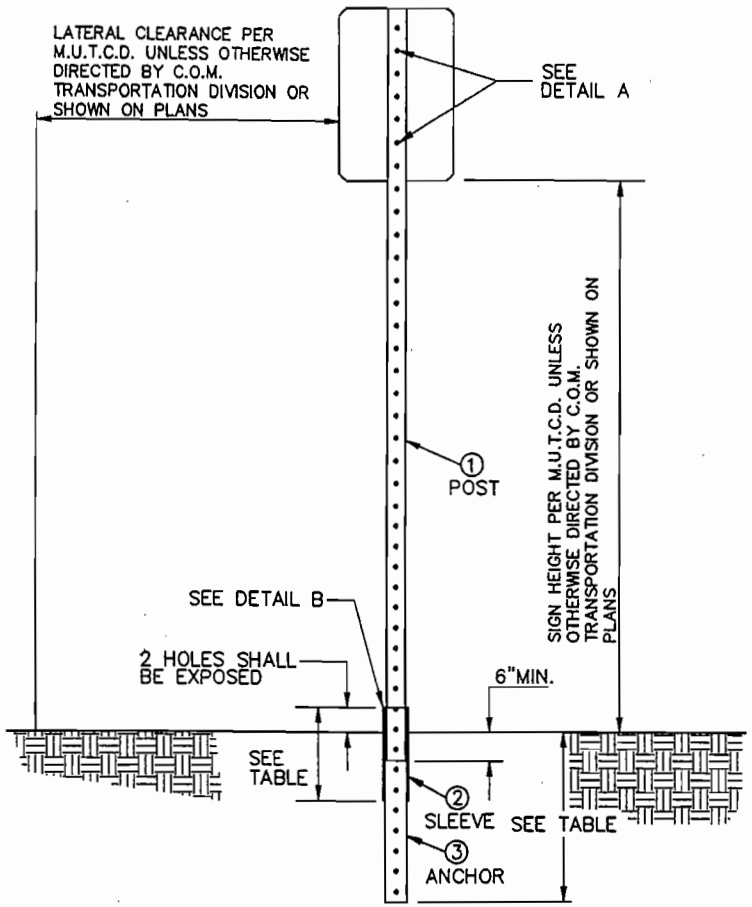


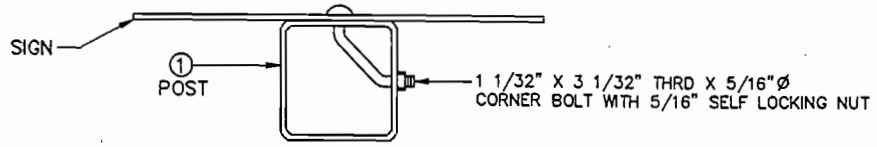


DETAIL A
SIGN MOUNTING

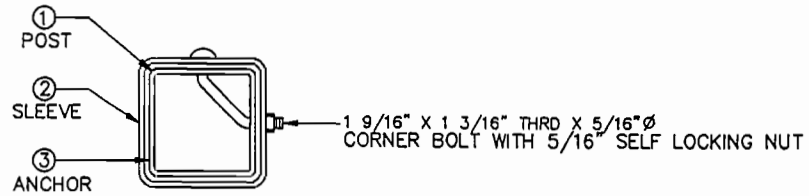


DETAIL B
ANCHOR ASSEMBLY

TABLE

| POST, SLEEVE, & ANCHOR SHALL BE GALVANIZED STEEL | POST SIZE 1 | SLEEVE SIZE 2 | ANCHOR SIZE 3 |
|---|---|---|---|
| UP TO 2000 SQ. IN. OF SIGN FACE | 2" X 2" 12 GAUGE | 2 1/2" X 2 1/2" X 18" 12 GAUGE | 2 1/4" X 2 1/4" X 36" 12 GAUGE |
| >2000 SQ. IN. OF SIGN FACE (DOUBLE POST) | 2 – 2" X 2" 12 GAUGE | 2–2 1/2" X 2 1/2" X18" 12 GAUGE | 2–2 1/4" X2 1/4" X36" 12 GAUGE |

* BASE EMBEDDED IN CONCRETE. SEE DETAIL M-22.3.

# SIGN POST INSTALLATION (SQUARE TUBING)

DETAIL NO.
M-39

REV. 12/19/01

# PEORIA DETAIL 132-1

## SIGN POST INSTALLATION

APPROVALS:

CITY ENGINEER DATE

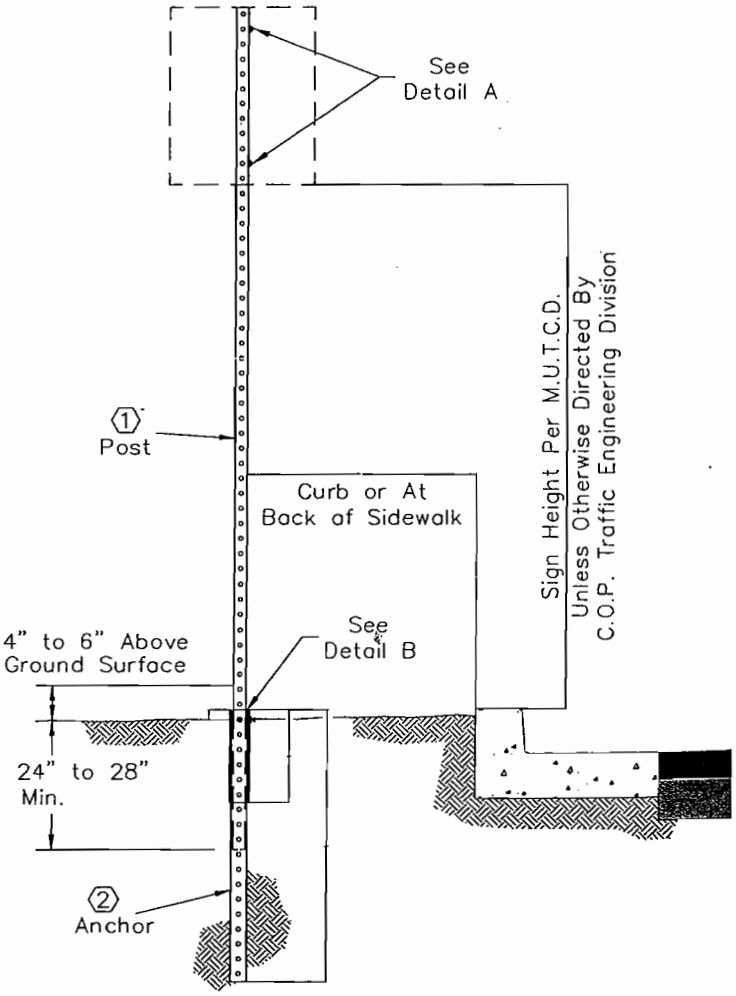


### Detail A
### Sign Mounting

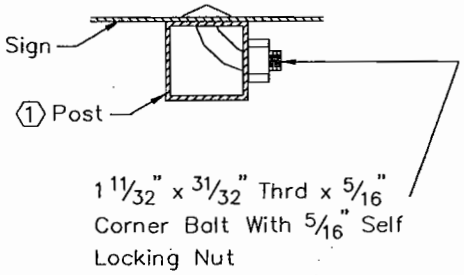


### Detail B
### Anchor Assembly

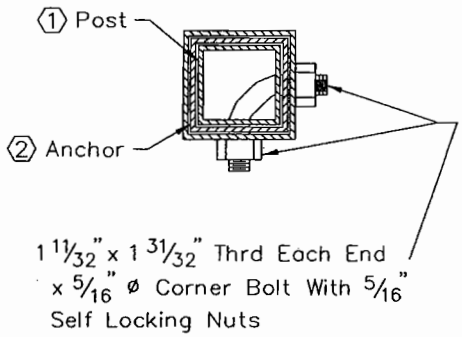


## Legend

1 Post – 1-3/4" x 1-3/4" Square Perforated 0.105" Galvanized Steel Tubing (Galvanized Finish)

2 Anchor – 2" x 2" x 30", Square Perforated 0.105" Galvanized Steel Tubing (Galvanized Finish)

NOTE:

1. Sign Post and Anchor Per COP Specs

I:\GUIDE\DETAILS\132-1.DWG

12/12/00

# PEORIA DETAIL 132-2

## SIGN POST SPECIFICATIONS

THE CITY OF PEORIA REQUIRES SQUARE TUBING FOR POST MOUNTED SIGN INSTALLATIONS. TUBING SHALL HAVE A GALVANIZED FINISH AND BE ROLL FORMED FROM 12 GAGE (.105 U.S.S. GAGE) COLD ROLLED STEEL, BE PERFORATED, AND HAVE A HOLE SIZE OF $\frac{7}{16}$" IN DIAMETER AND 1" ON CENTER ON ALL SIDES. ALL POSTS REQUIRE A 2" x 2" x 30" ANCHOR TO BE DRIVEN INTO ANY GROUND SURFACES AT A DEPTH OF 24" TO 28". FOR SINGULAR SIGNS A $1\frac{3}{4}$" x $1\frac{3}{4}$" x 10' POST IS REQUIRED. FOR DUAL SIGNS A $1\frac{3}{4}$" x $1\frac{3}{4}$" x 12' POST IS REQUIRED. ALSO, FOR SIGNS THAT EXCEED 42" IN WIDTH, DUAL POSTS AND ANCHORS ARE REQUIRED. ATTACHMENT OF THE POST TO ANCHOR REQUIRES A $1\frac{11}{32}$" x $\frac{31}{32}$" x $\frac{5}{16}$" CORNER BOLT (THREADED AT EACH END) WITH $\frac{5}{16}$" SELF LOCKING NUTS. ATTACHMENT OF THE SIGN TO POST REQUIRES A $1\frac{11}{32}$" x $\frac{31}{32}$" x $\frac{5}{16}$" CORNER BOLT WITH A $\frac{5}{16}$" SELF LOCKING NUT.

I:\GUIDE\DETAILS\132-2.DWG

12/12/00

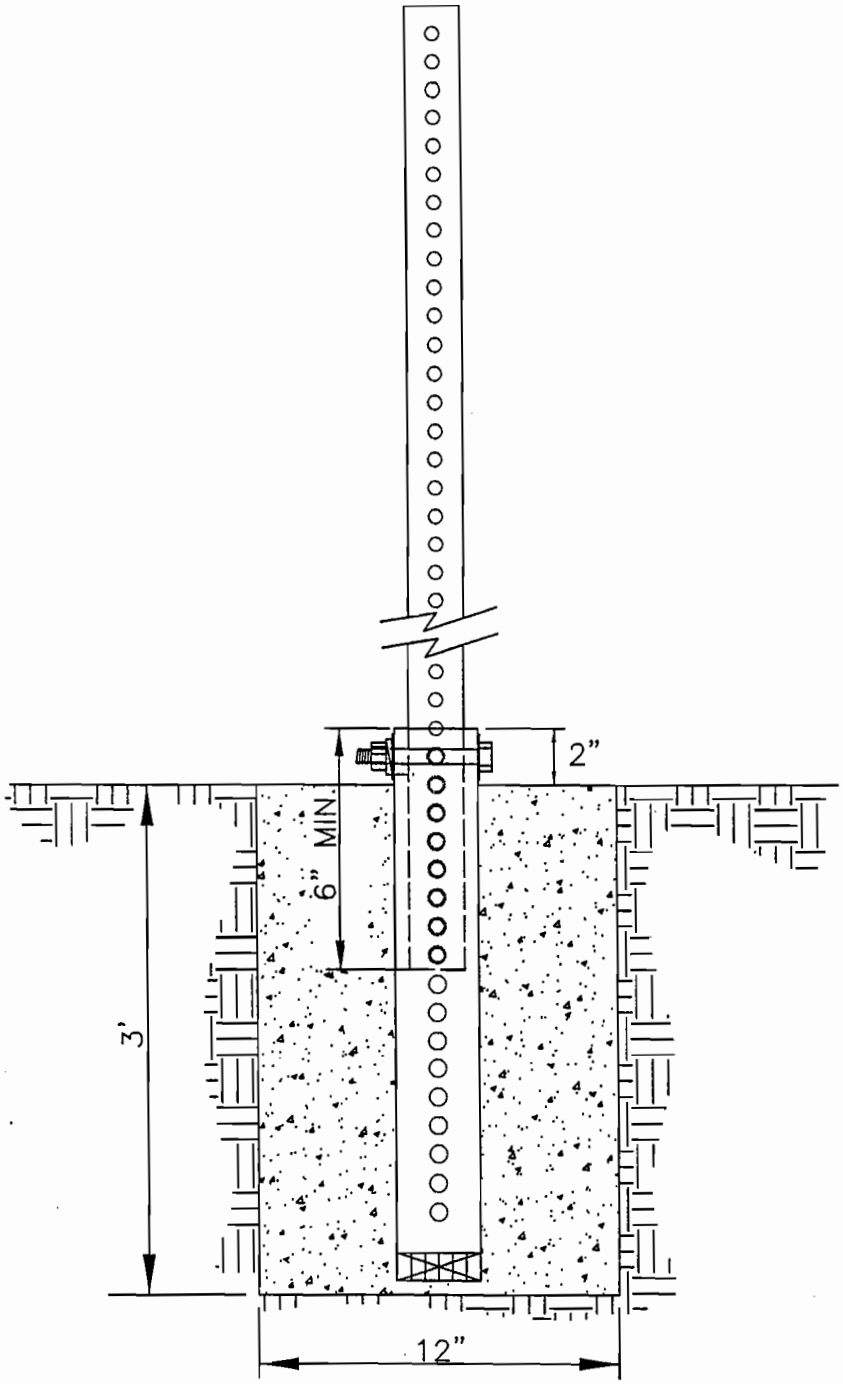


NOTES:

1. INSTALL ALL TRAFFIC SIGNS 1296 SQUARE INCHES OR LESS ON 12 GAUGE 1 3/4" SQUARE STEEL TUBING.

2. INSTALL ALL TRAFFIC SIGNS GREATER THAN 1296 SQUARE INCHES ON 12 GUAGE 2" SQUARE STEEL TUBING.

3. CONCRETE BASE 3'DEEP X 12" WIDE 2'2" LONG ANCHOR COMPLETELY TAPERED TO PREVENT SEAPAGE OF CONCRETE. ?

4. POST ANCHOR SHALL NOT PROTRUDE FROM THE GROUND MORE THAN 2".

5. ALL TRAFFIC SIGNS, WITH THE EXCEPTION OF DELINEATORS, SHALL HAVE A MIN. HEIGHT OF 7' TO BOTTOM OF SIGN. DELINEATORS SHALL BE MOUNTED AT A MINIMUM OF 4' TO THE BOTTOM OF THE SIGN.

| DETAIL NO. | TOWN OF GILBERT STANDARD DETAIL | SQUARE TUBING FOR TRAFFIC SIGN | CREATED 10/01/99 | DETAIL NO. |
|---|---|---|---|---|
| 79 | | | | 9 |

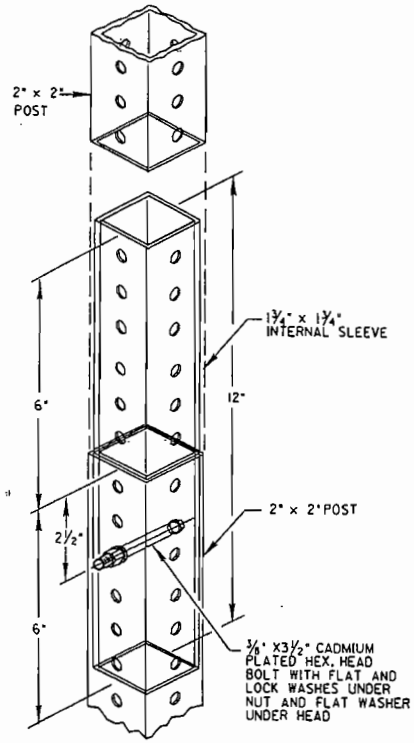


SINGLE POST PERMISSIBLE FIELD SPLICE
(NOT ALLOWED ON TELESCOPING POSTS)

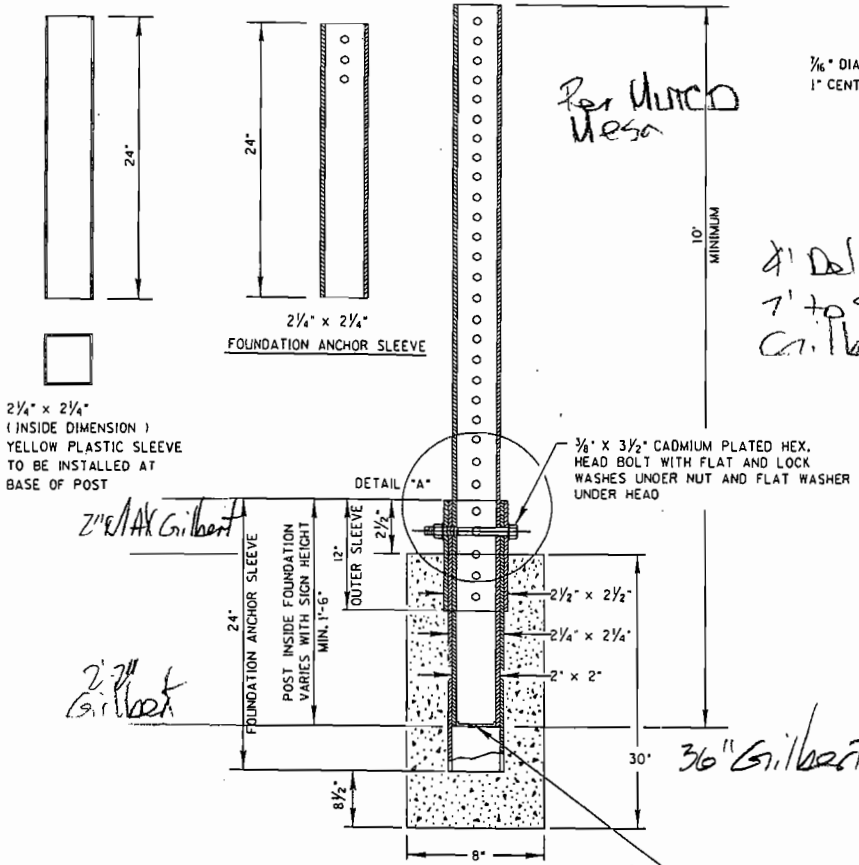


SINGLE POST FOUNDATION DETAIL

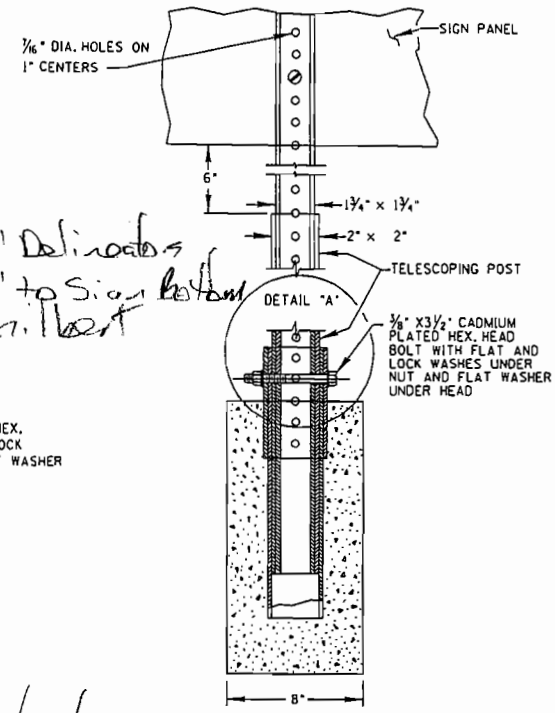


TELESCOPING POST DETAILS

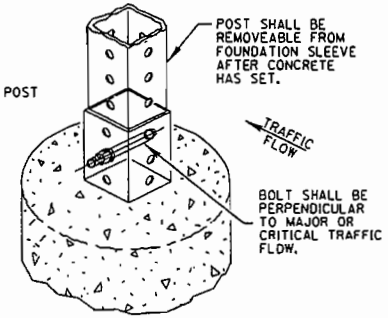


DETAIL "A"

**NOTES:**

1. IF ANY POST SECTION IS SHORTER THAT THE PANEL HEIGHT, THE FIELD SPLICE SHALL BE BEHIND THE PANEL.
2. FIELD SPLICES ARE NOT PERMITTED ON TELESCOPING POSTS.

**NOTES:**

1. ALL DIMENSIONS IN INCHES, EXCEPT AS NOTED.
2. FOR ESTIMATING PURPOSES, CONCRETE QUANTITY PER POST IS 1.0 CU/FT.
3. FOUNDATION ANCHOR SLEEVE TO BE SOLID ON ALL FOUR SIDES EXCEPT FOR THREE HOLES AT TOP OF SLEEVES SHOWN IN DETAIL "A"
4. USE GRADE # 2, ZINC COATED, 18 NC THREAD, 3" X 5/16" BOLT WITH FLAT WASHER UNDER NUT AND FLAT WASHER UNDER HEAD. TO ATTACH SIGN TO BRACKET.

| MARICOPA COUNTY DEPARTMENT OF TRANSPORTATION<br>STANDARD DETAIL | SQUARE PERFORATED TUBE SIGN POST<br>FOUNDATION & SPLICE DETAILS | DATE:<br>05/2004 | DETAIL NO.<br>2058 |
|---|---|---|---|

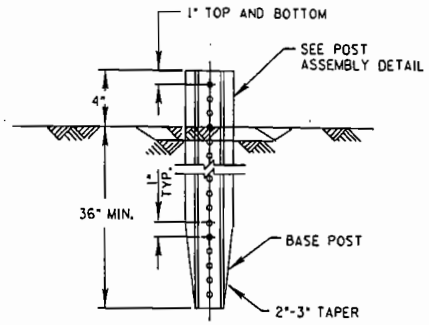


BASE POST AND INSTALLATION

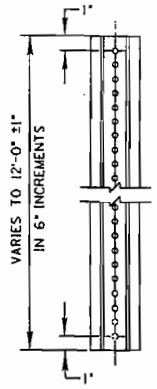


SIGN POST

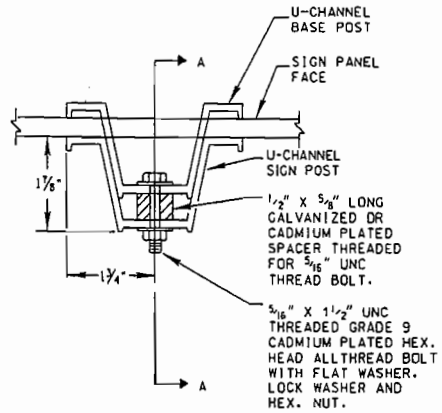


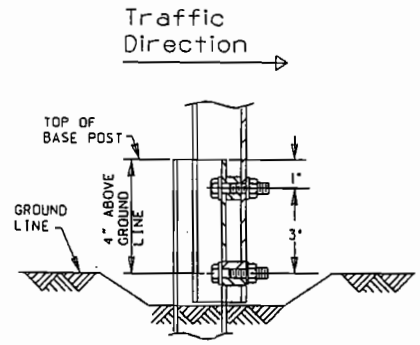


POST ASSEMBLY
SECT. A-A

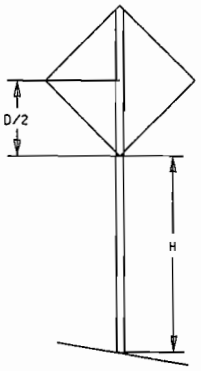


U-CHANNEL SELECTION

WIND SPEED= 70 MPH (3LBS. PER FT. POST)

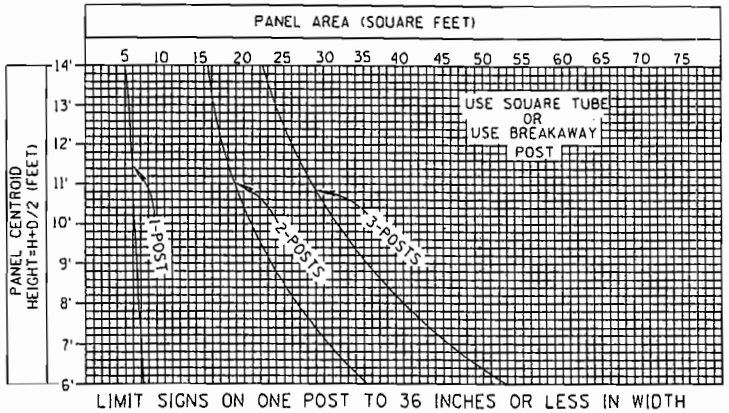


LIMIT SIGNS ON ONE POST TO 36 INCHES OR LESS IN WIDTH

NOTE: ALL DIMENSIONS IN INCHES EXCEPT AS NOTED.

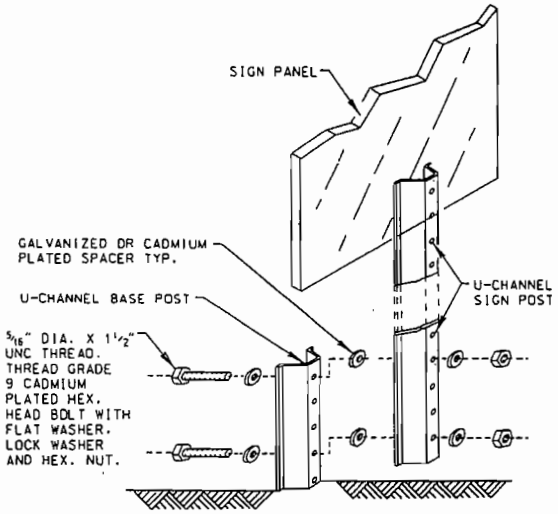


INSTALLATION PICTORIAL

| MARICOPA COUNTY DEPARTMENT OF TRANSPORTATION<br>STANDARD DETAIL | U-CHANNEL POST SELECTION AND INSTALLATION DETAILS | DATE:<br>05/2004 | DETAIL NO.<br>2059 |
|---|---|---|---|

6"x6" Redwood PAX

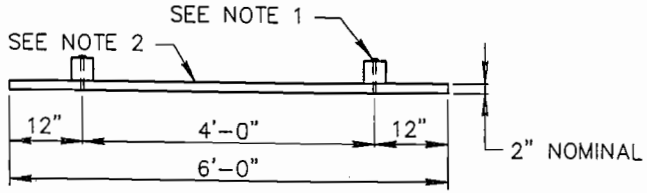


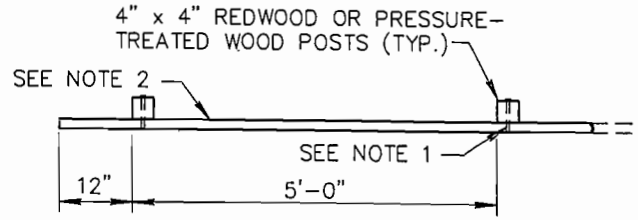


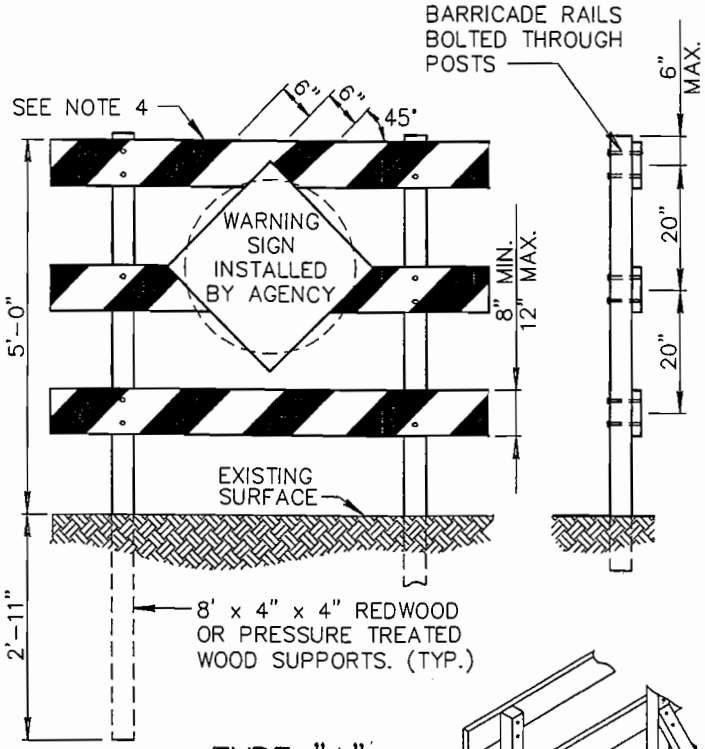


TYPE "A"

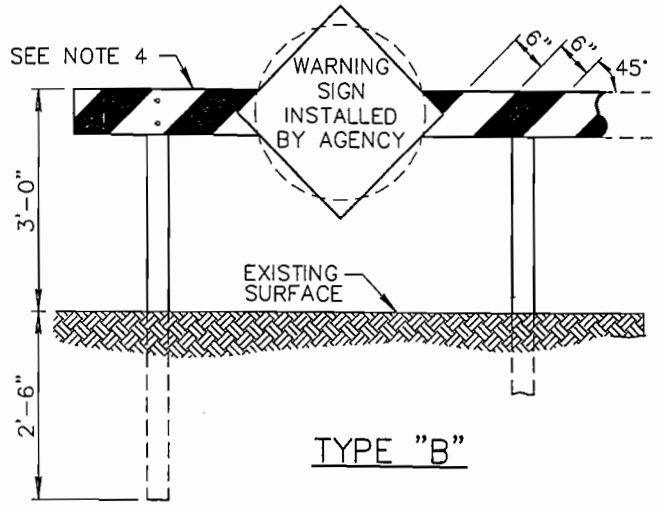


TYPE "B"

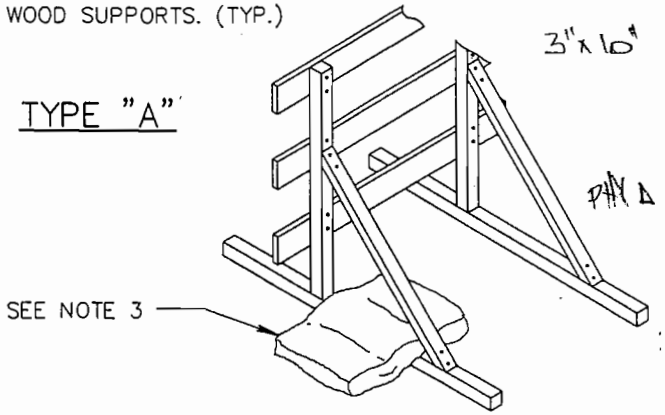


## NOTES:

1. FASTEN WITH 1/2" x 5" (8") LAG SCREWS WITH 2 FLAT WASHERS OR (2) 5/8" BOLTS, WITH 4 FLAT WASHERS.
2. 2" x 8" DOUGLAS FIR PLANK (LENGTH TO BE DETERMINED ON PLANS.)
3. WHEN BARRICADE (TYPE "A") IS CONSTRUCTED ON BASES INSTEAD OF POSTS SET INTO THE GROUND, IT MAY BE DESIRABLE TO BALLAST THE BASES WITH SAND BAGS OR BY STAKING TO PROVIDE RESISTANCE TO OVERTURNING DURING PERIODS OF HIGH WINDS.
4. TWO COATS OF WHITE PAINT PER SECTION 790 SHALL BE APPLIED TO ALL EXPOSED SURFACES OF THE BARRICADE. AN ADDITIONAL TWO COATS OF ORANGE PAINT PER SECTION 790 SHALL BE APPLIED TO CREATE THE ALTERNATE ORANGE AND WHITE STRIPES FOR TEMPORARY BARRICADES AND TWO COATS OF RED PAINT PER SECTION 790 SHALL BE APPLIED TO CREATE ALTERNATE RED AND WHITE STRIPES FOR PERMANENT BARRICADES. HIGHWAY SAFETY SPHERES (BEADS) PER ADOT 708-2.02 SHALL BE APPLIED BY HAND TO ALL CROSS MEMBERS, FRONT AND BACK AND ON BOTH COLORS, IMMEDIATELY AFTER PAINTING. THE STRIPES SHALL SLOPE DOWNWARD IN THE DIRECTION TRAFFIC IS TO PASS.

ATTACHMENT 5

| DETAIL NO. | | | | REVISED | DETAIL NO. |
|---|---|---|---|---|---|
| 130 | MARICOPA ASSOCIATION of GOVERNMENTS | STANDARD DETAIL ENGLISH | BARRICADES | 01-01-2003 | 130 |

4"x4" or Possible Treated (MAG)

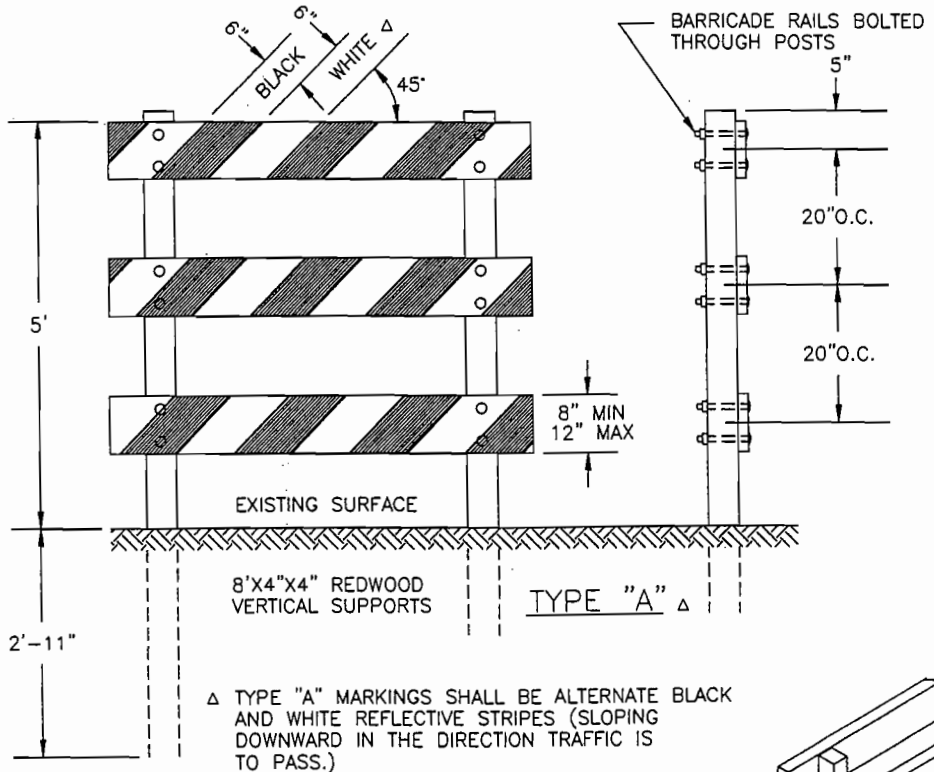


Δ TYPE "A" MARKINGS SHALL BE ALTERNATE BLACK AND WHITE REFLECTIVE STRIPES (SLOPING DOWNWARD IN THE DIRECTION TRAFFIC IS TO PASS.)

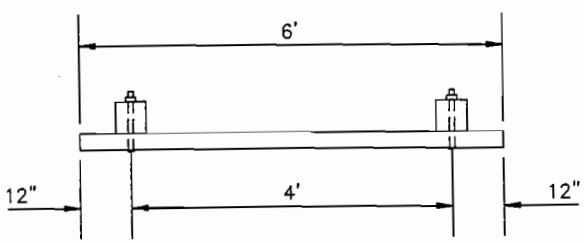


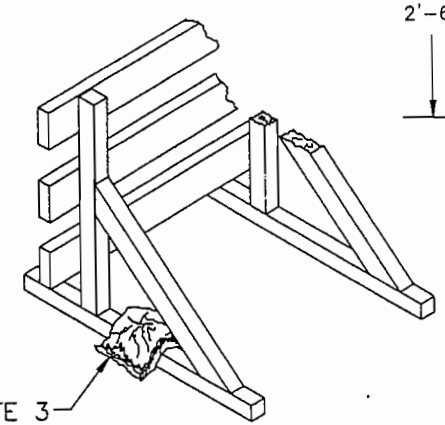


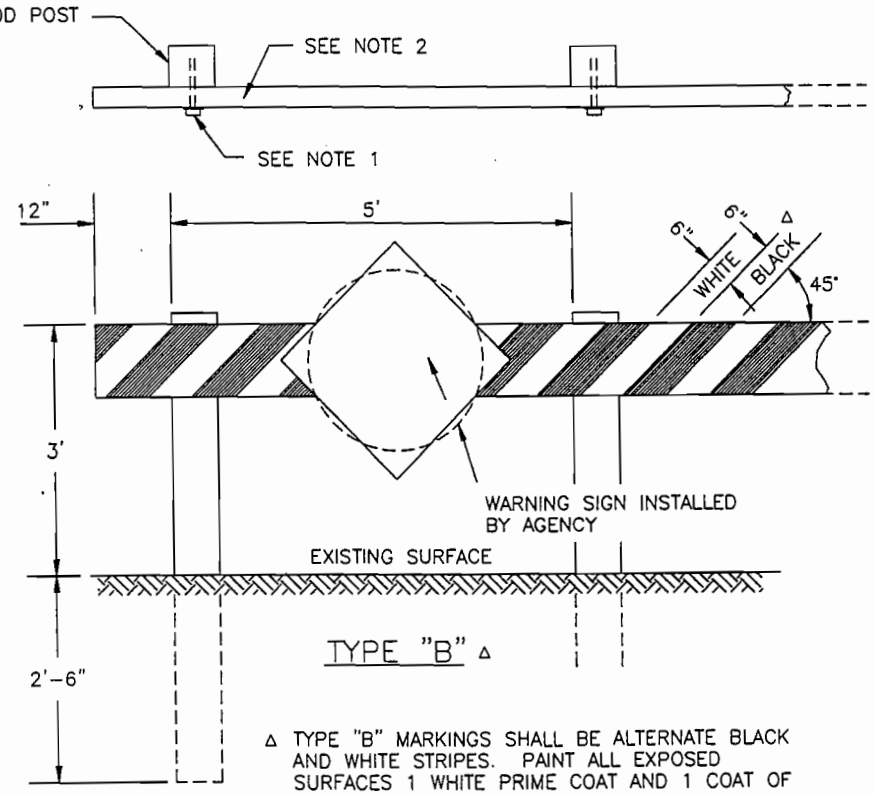


Δ TYPE "B" MARKINGS SHALL BE ALTERNATE BLACK AND WHITE STRIPES. PAINT ALL EXPOSED SURFACES 1 WHITE PRIME COAT AND 1 COAT OF WHITE EXTERIOR ENAMEL BLACK STRIPING, 1 COAT OF EXTERIOR BLACK ENAMEL.

NOTES:

1. FASTEN WITH 1/2"X8" LAG SCRWES WITH 2 FLAT WASHERS OR (2) 5/8" BOLTS, WITH 4 FLAT WASHERS.
2. 3"X10" DOUGLAS FIR PLANK (LENGTH TO BE DETERMINED ON PLANS).
3. WHEN BARRICADE (TYPE "A") IS CONSTRUCTED ON BASED IN-STEAD OF POSTS SET INTO THE GROUND, IT MAY BE DESIRABLE TO BALLAST THE BASES WITH SAND BAGS OR BY STAKING TO PROVIDE RESISTANCE TO OVERTURNING DURING PERIODS OF HIGH WINDS.
4. MAG Paint Spec.

Δ REVISED 6/2/82

| DETAIL NO. | City of Phoenix STANDARD DETAIL | BARRICADE | APPROVED Kenny W Hain CITY ENGINEER 07-09-92 DATE | DETAIL NO. |
|---|---|---|---|---|
| P1106 | | | | P1106 |

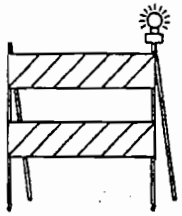

TYPE I & II BARRICADE

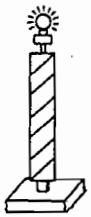

VERTICAL PANEL BARRICADE

INLAY STEEL PLATE FLUSH TO EXISTING PAVEMENT & COLD PATCH JOINT. PLACE BUMP SIGNS AT ALL STEEL PLATE CROSSINGS.

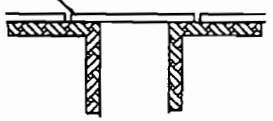

ROAD PLATE DETAIL

NOTE :

1. A SAFETY FENCE IS REQUIRED FOR ALL UNATTENDED TRENCHES 24 INCHES AND WIDER, AND/OR 36 INCHES AND DEEPER.
2. FOR UNATTENDED TRENCHES LEFT OVERNIGHT, USE LIGHTED VERTICAL PANEL BARRICADES WITH SAND BAGS AND/OR TYPE I, II BARRICADES. ANY ALTERNATIVE SOLUTION MUST BE APPROVED BY THE CITY ENGINEER.
3. ALL UTILITY POLE LOCATIONS NOT PLATED MUST HAVE SAFTEY FENCE PLACED AROUND HOLE PRIOR TO CREWS LEAVING THE SITE.
4. ALL UTILITY POLES LEFT ALONG THE ROADWAY, MUST HAVE LIGHTED BARRICADES PLACED AT EACH END OF THE POLE.

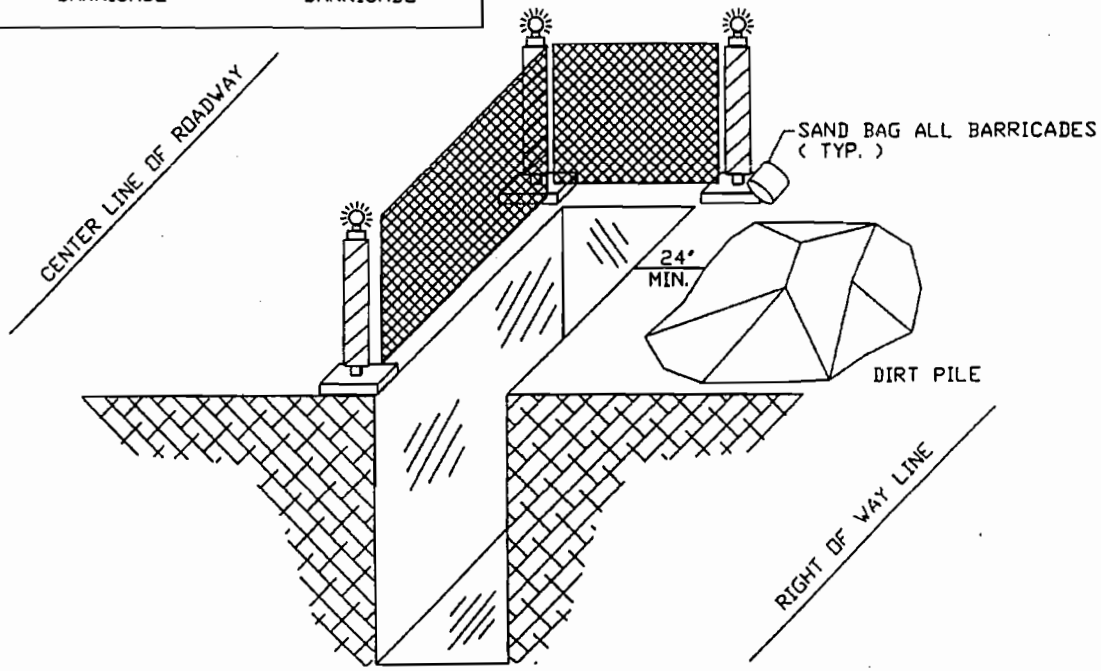


SECTION VIEW
OPEN TRENCH / PIT

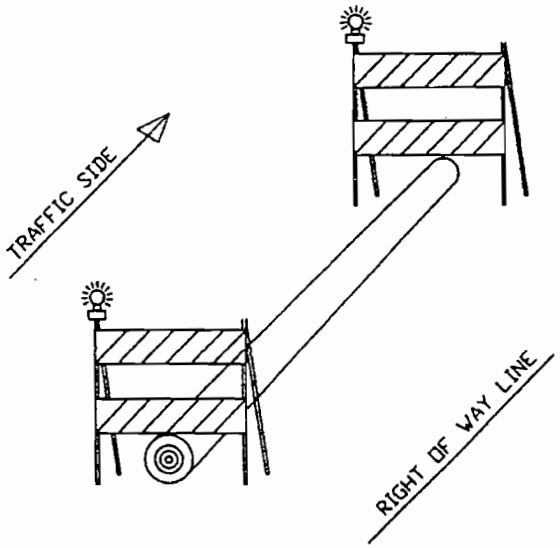


UTILITY POLE VIEW
UTILITY POLE ALONG ROADWAY

| DETAIL NO. | STANDARD DETAIL | OPEN TRENCH / OPEN PIT / UTILITY POLE FENCING / BARRICADE DETAIL | CITY OF APACHE JUNCTION PUBLIC WORKS DEPARTMENT (602) 982-1055 | DETAIL NO. |
|---|---|---|---|---|
| AJ-PW001 | REVISED: SEPTEMBER, 1999 | | | AJ-PW001 |

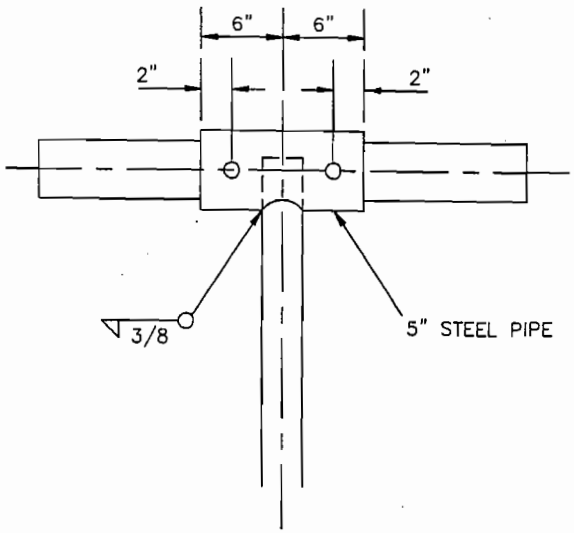


"T" SLEEVE OPTION

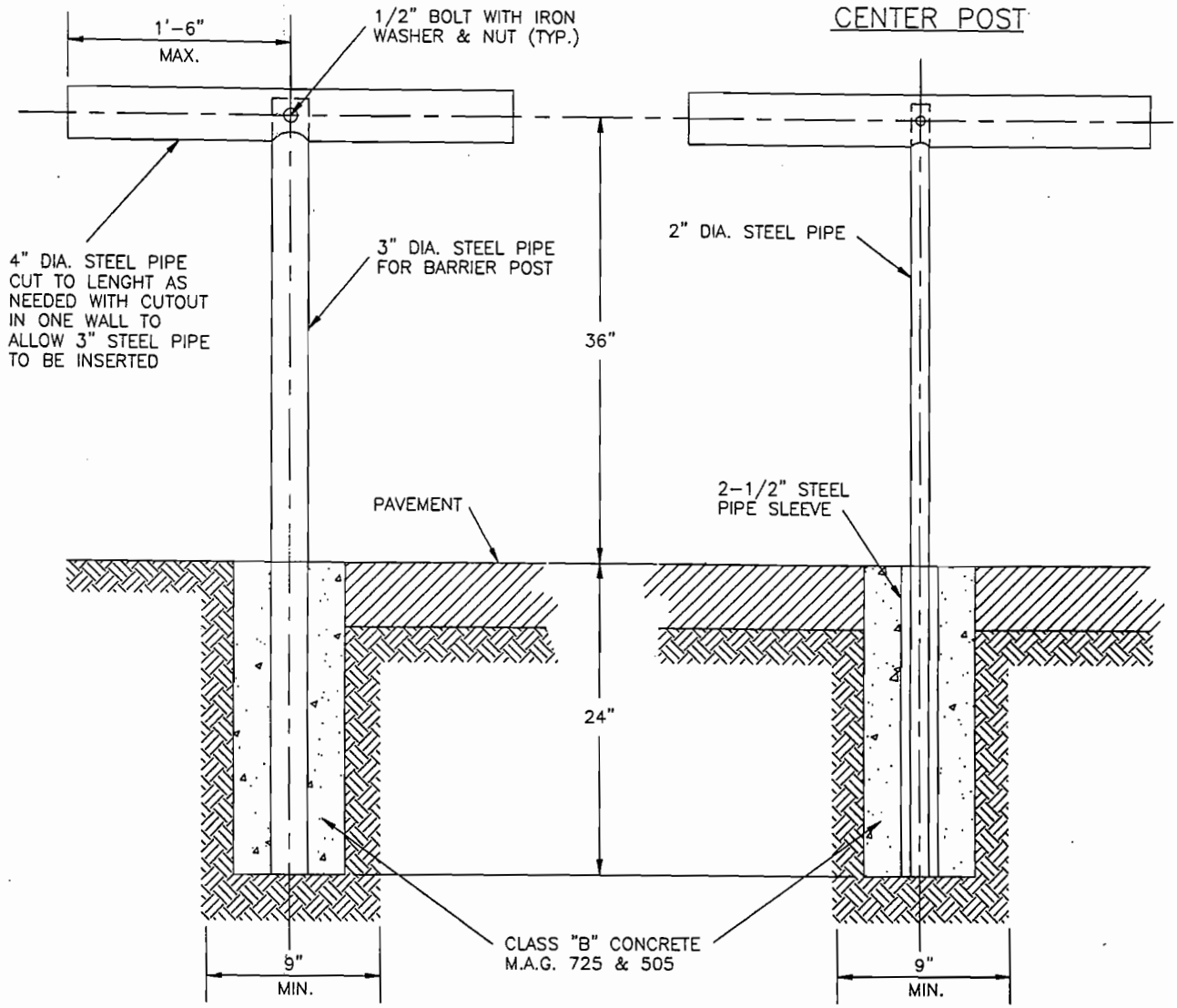


NOTES:

1. 1'-6" MAX. OVERHANG
2. MAX. OVERALL LENGTH IS 33'
3. CENTER POST REQUIRED IF CLEAR SPAN EXCEEDS 15'.
4. CENTER POST SHALL BE 2" DEA. WITH A 2-1/2" DIA. SLEEVE IN THE FOOTING.
5. ALL PIPE IS SCHEDULE 40, GALVANIZED STEEL. (ASTM A 53)

| DETAIL NO. | City of Phoenix STANDARD DETAIL | STEEL PIPE BARRICADE | APPROVED CITY ENGINEER | 07-09-92 DATE | DETAIL NO. |
|---|---|---|---|---|---|
| P1024 | | | | | P1024 |

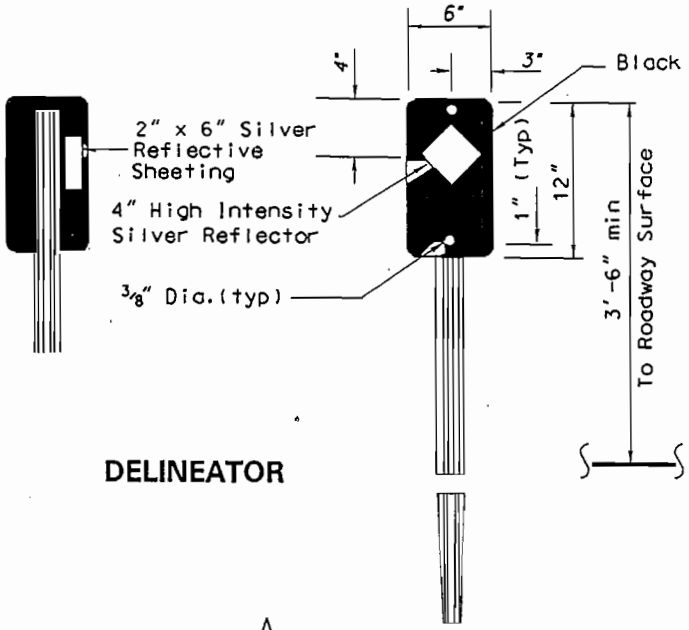


**DELINEATOR**

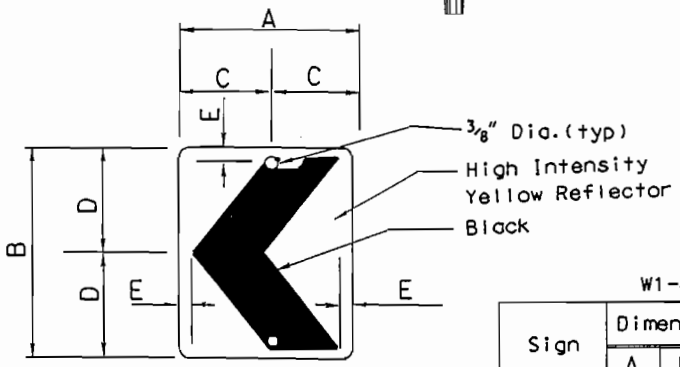


**W1-8**
**CHEVRON**

W1-8 CHEVRON

| Sign | Dimensions (inches) | | | | |
|---|---|---|---|---|---|
| | A | B | C | D | E |
| Min. | 12 | 18 | 6 | 9 | 1/2 |
| Std. | 18 | 24 | 9 | 12 | 3/4 |
| Special | 24 | 30 | 12 | 15 | 7/8 |

**M-4**
**END OF ROADWAY MARKER**

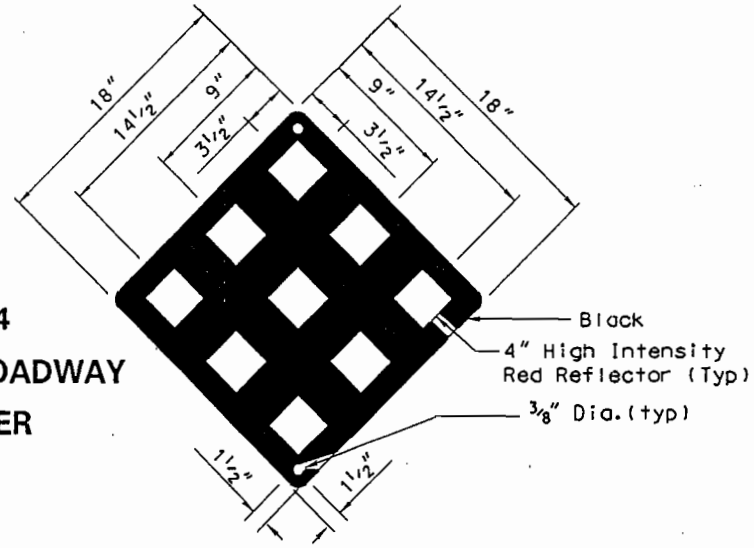


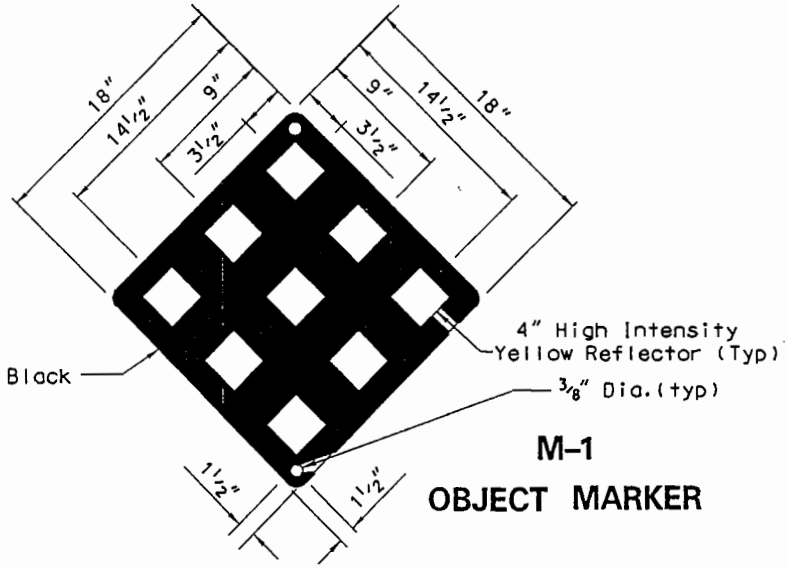


**M-1**
**OBJECT MARKER**

| MARICOPA COUNTY DEPARTMENT OF TRANSPORTATION STANDARD DETAIL | ROADWAY MARKERS | DATE: 11/3/02 | DETAIL NO. 2056 |
|---|---|---|---|

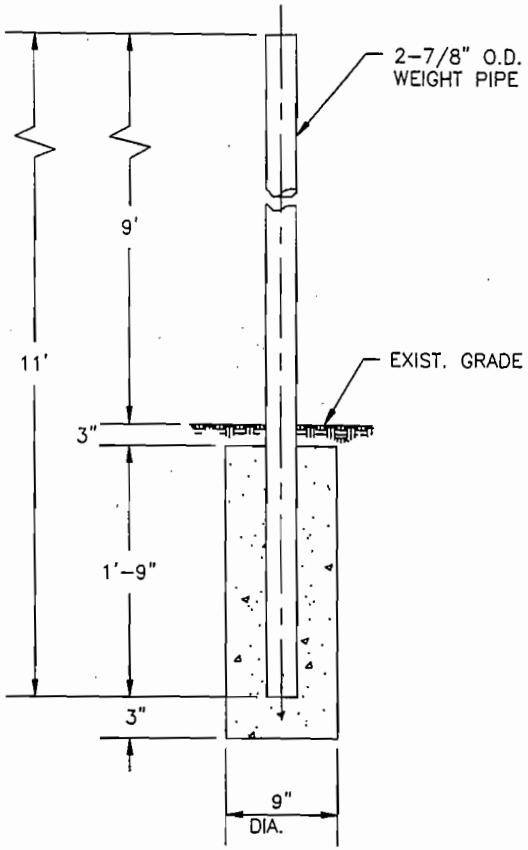


STREET SIGN BASE

NOTE:
CONCRETE BASE FOUNDATIONS SHALL BE CLASS "C" CONCRETE AS PER MAG SECT. 505 & 725.

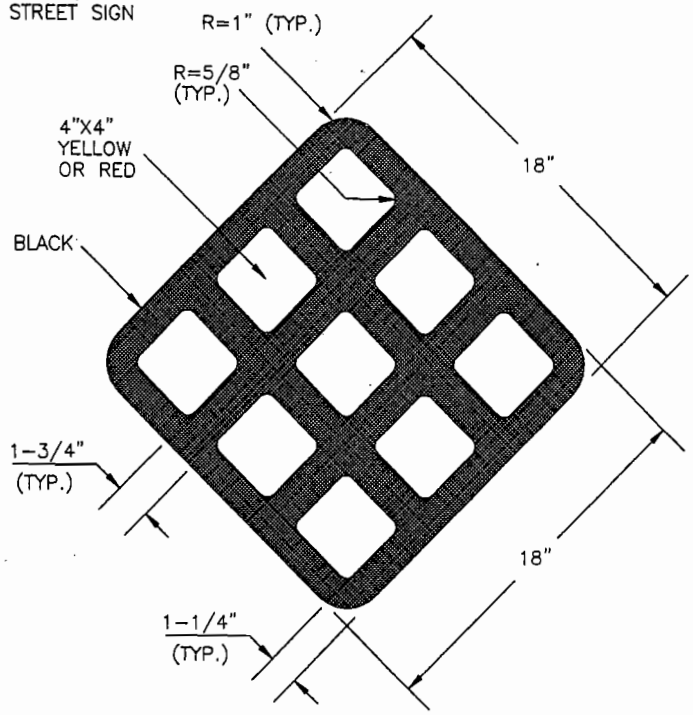


OBJECT MARKER

NOTES:
1. RED USED TO INDICATE A TOTAL CLOSURE COND-TION WHEREBY TRAFFIC CAN PROCEED NO FURTHER. (RED BALL)
2. YELLOW USED TO INDICATE OBJECTS WITHIN OR IMMEDIATELY ADJACENT TO THE ROADWAY CAUSING A PARTIAL CLOSURE OR SERIOUS INTERFERENCE WITH TRAFFIC. (YELLOW BALL)

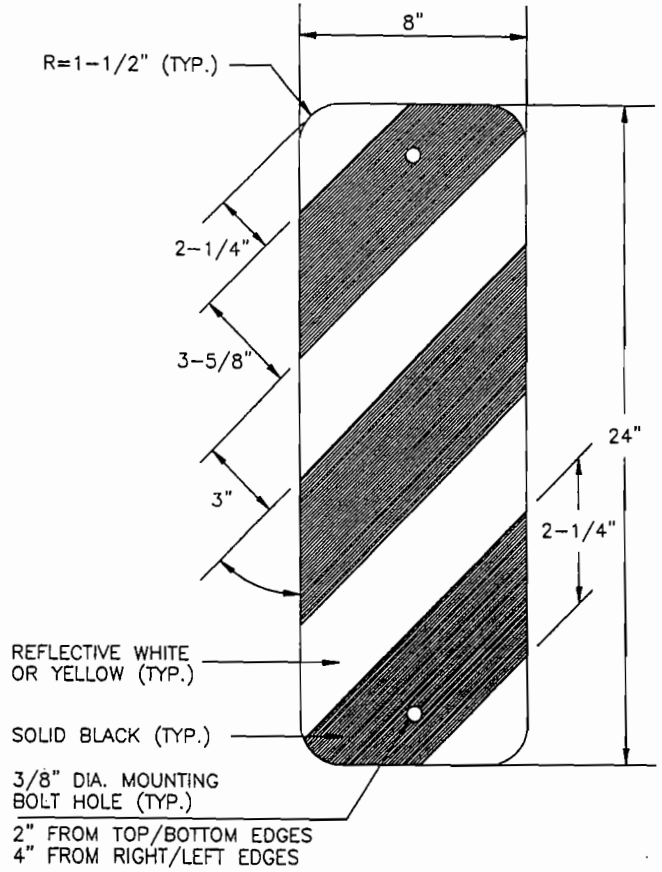


DELINEATOR

NOTES:
1. STRIPES TO SLOPE DOWNWARD TO THE SIDE ON WHICH TRAFFIC IS TO PASS.
2. DELINEATOR TO BE BLACK AND WHITE WHEN USED ON THE RIGHT SIDE OF THE ROADWAY - AND BLACK AND YELLOW WHEN USED ON THE LEFT SIDE.

| DETAIL NO. | City of Phoenix STANDARD DETAIL | STREET SIGN BASE, OBJECT MARKER, AND DELINEATOR | APPROVED Kenny W Harris CITY ENGINEER 07-09-92 DATE | DETAIL NO. |
|---|---|---|---|---|
| P1023 | | | | P1023 |

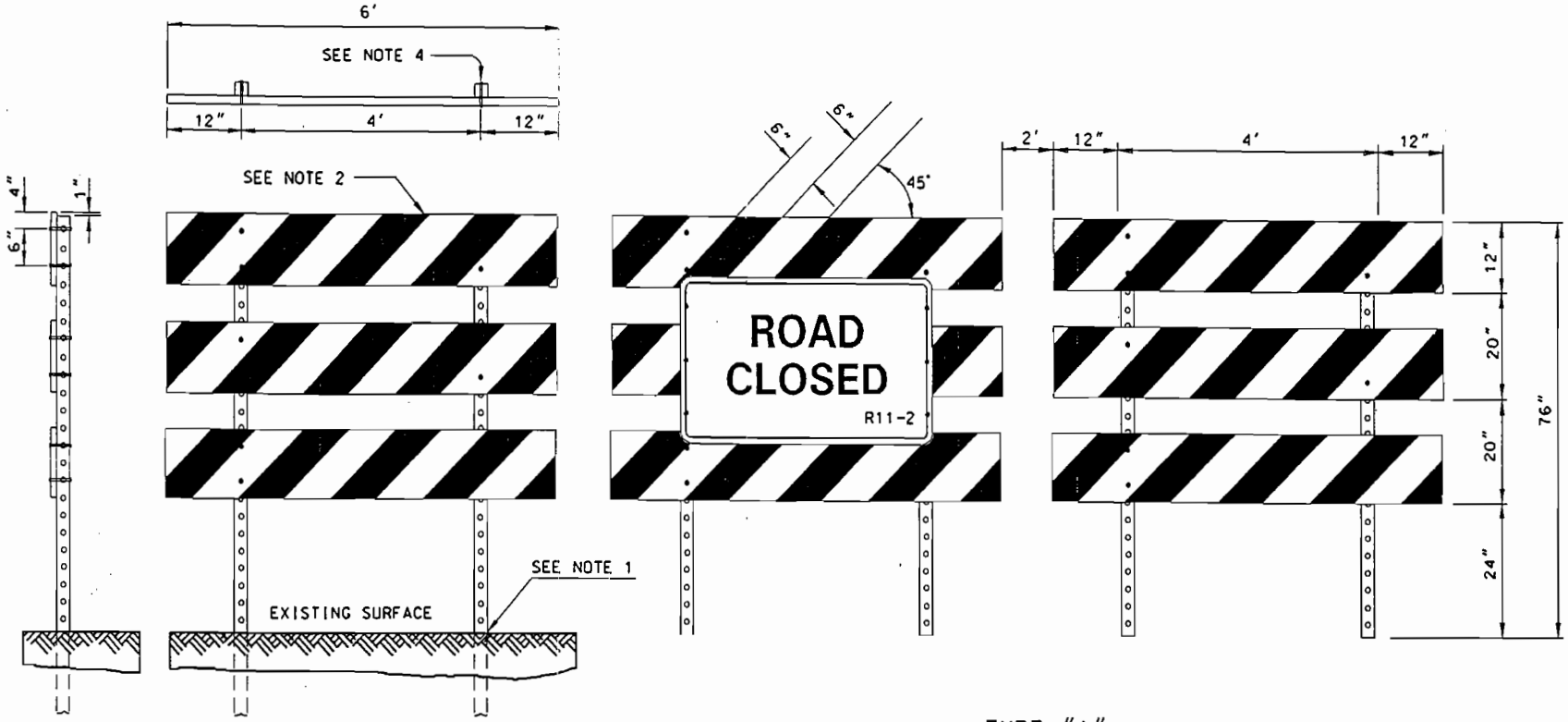


TYPE "A"

1. SEE DETAIL # 2058 FOR SQUARE TUBE MOUNTING INSTALLATION .
2. TYPE "A" MARKINGS SHALL BE ALTERNATE RED AND WHITE ENGINEERING GRADE REFLECTIVE STRIPS (SLOPING DOWNWARD IN THE DIRECTION TRAFFIC IS TO PASS).
3. USE 12" X 6' X 0.100" ALUMINUM FOR THE BARRICADE RAILS.
4. FASTEN WITH 3/8" X 3" CAD. PLATED HEX. HEAD BOLT WITH FLAT AND LOCK WASHER UNDER NUT & FLAT WASHER UNDER HEAD.

| MARICOPA COUNTY DEPARTMENT OF TRANSPORTATION<br>STANDARD DETAIL | PERMANENT ROAD CLOSURE<br>USING TYPE III BARRICADES | DATE:<br>4/11/00 | DETAIL NO.<br>2057 |
|---|---|---|---|

1¾" Up to 1296 in² Gilbert

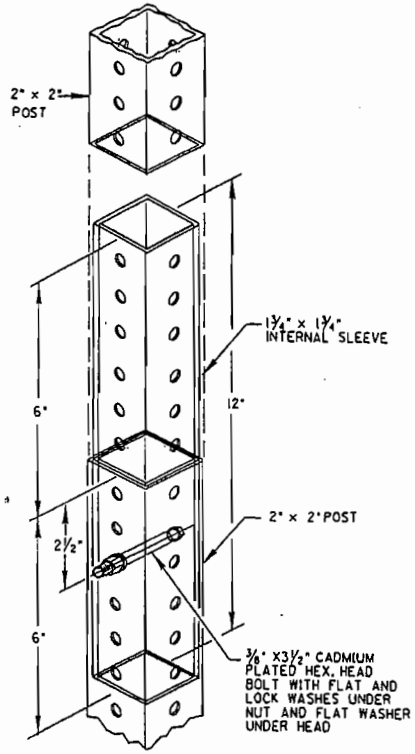


SINGLE POST PERMISSIBLE FIELD SPLICE
(NOT ALLOWED ON TELESSCOPING POSTS)

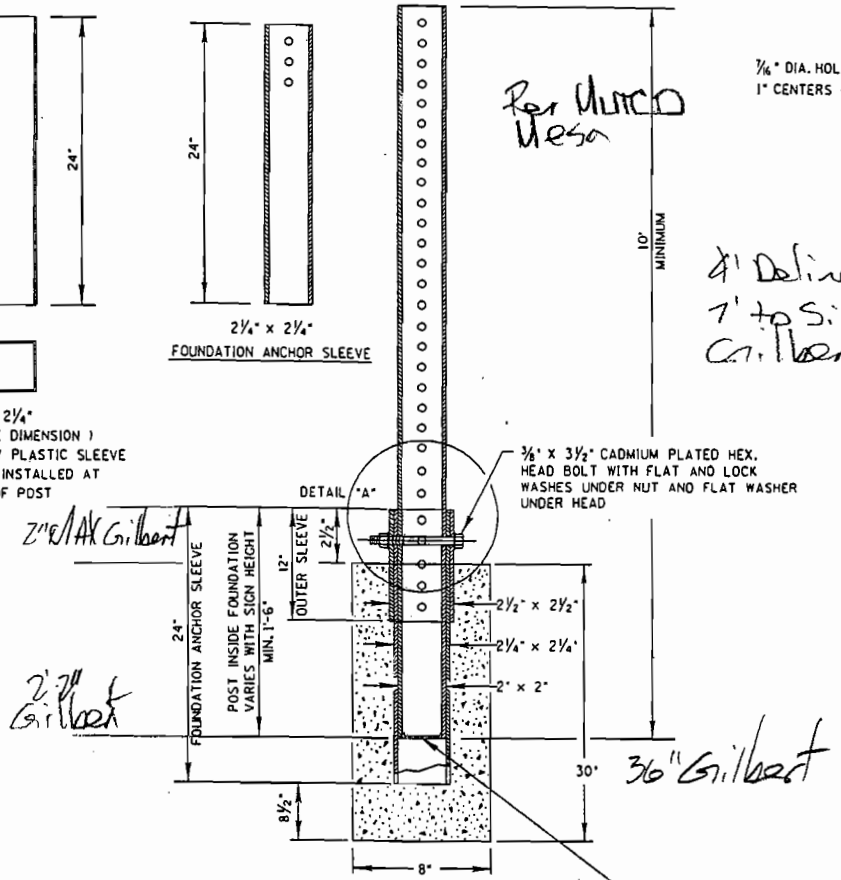


SINGLE POST FOUNDATION DETAIL

12" Gilbert

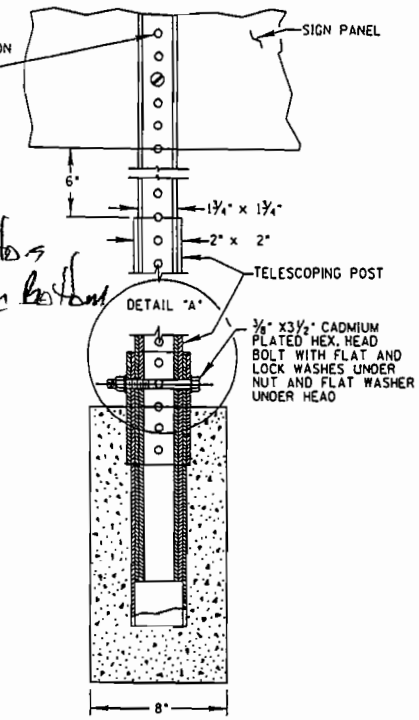


4' Delineators
7' to Sign Bottom
Gilbert

TELESCOPING POST DETAILS

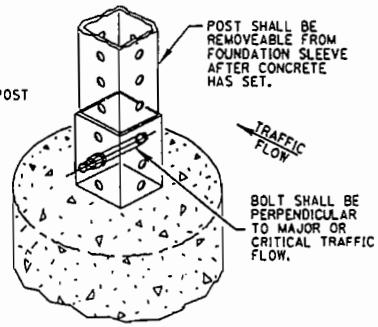


DETAIL "A"

**NOTES:**

1. IF ANY POST SECTION IS SHORTER THAT THE PANEL HEIGHT, THE FIELD SPLICE SHALL BE BEHIND THE PANEL.
2. FIELD SPLICES ARE NOT PERMITTED ON TELESCOPING POSTS.

**NOTES:**

1. ALL DIMENSIONS IN INCHES, EXCEPT AS NOTED.
2. FOR ESTIMATING PURPOSES, CONCRETE QUANTITY PER POST IS 1.0 CU/FT.
3. FOUNDATION ANCHOR SLEEVE TO BE SOLID ON ALL FOUR SIDES EXCEPT FOR THREE HOLES AT TOP OF SLEEVES SHOWN IN DETAIL "A"
4. USE GRADE # 2, ZINC COATED, 18 NC THREAD, 3" X 5/16" BOLT WITH FLAT WASHER UNDER NUT AND FLAT WASHER UNDER HEAD, TO ATTACH SIGN TO BRACKET.

| MARICOPA COUNTY DEPARTMENT OF TRANSPORTATION<br>STANDARD DETAIL | SQUARE PERFORATED TUBE SIGN POST<br>FOUNDATION & SPLICE DETAILS | DATE:<br>05/2004 | DETAIL NO.<br>2058 |
|---|---|---|---|