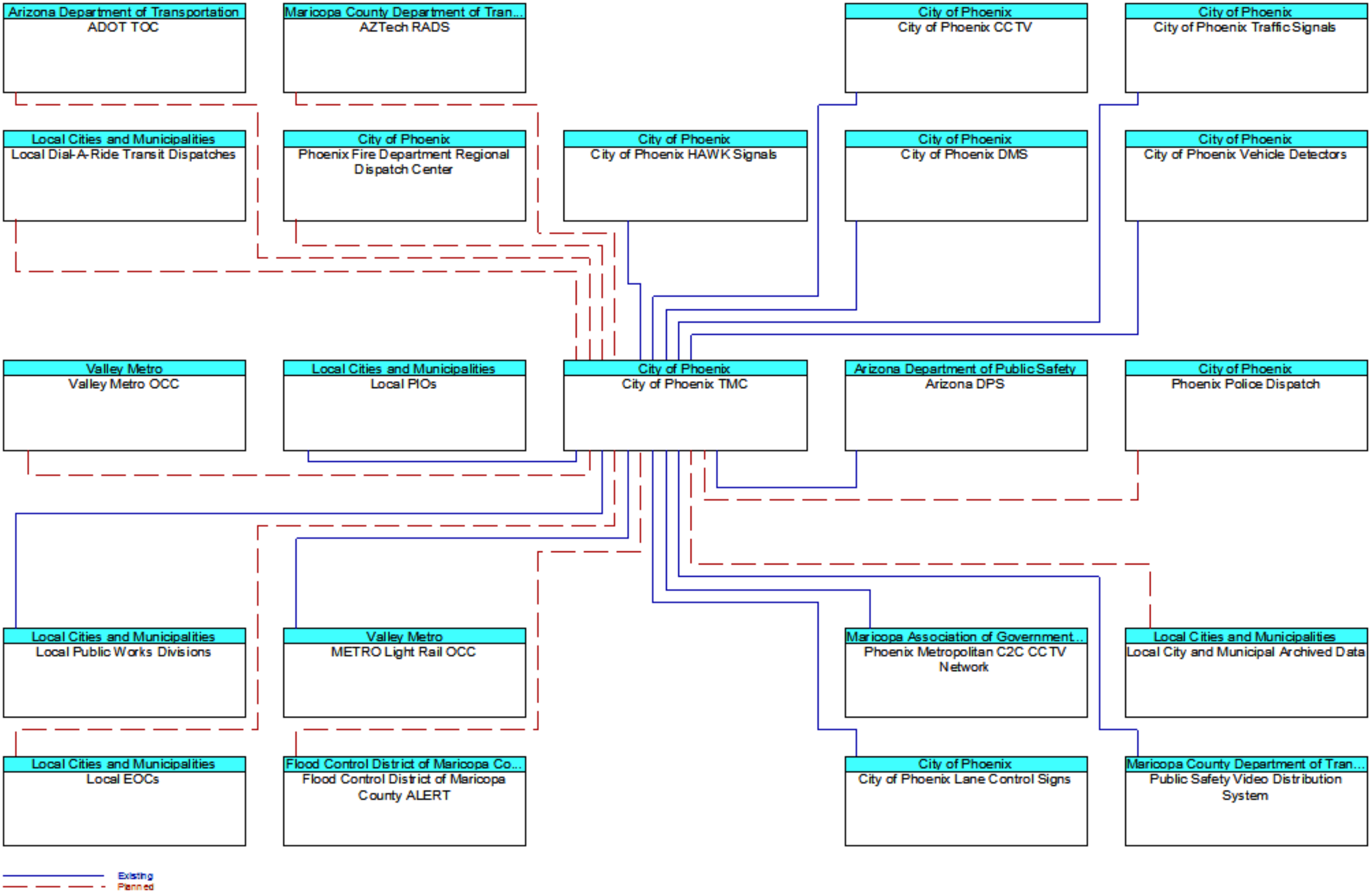
Arizona Department of Transportation
ADOT TOC
Maricopa County Department of Tran...
AZTech RADS
City of Phoenix
City of Phoenix CCTV
City of Phoenix
City of Phoenix Traffic Signals
Local Cities and Municipalities
Local Dial-A-Ride Transit Dispatches
City of Phoenix
Phoenix Fire Department Regional Dispatch Center
City of Phoenix
City of Phoenix HAWK Signals
City of Phoenix
City of Phoenix DMS
City of Phoenix
City of Phoenix Vehicle Detectors
Valley Metro
Valley Metro OCC
Local Cities and Municipalities
Local PIOs
City of Phoenix
City of Phoenix TMC
Arizona Department of Public Safety
Arizona DPS
City of Phoenix
Phoenix Police Dispatch
Local Cities and Municipalities
Local Public Works Divisions
Valley Metro
METRO Light Rail OCC
Maricopa Association of Government...
Phoenix Metropolitan C2C CCTV Network
Local Cities and Municipalities
Local City and Municipal Archived Data
Local Cities and Municipalities
Local EOCs
Flood Control District of Maricopa Co...
Flood Control District of Maricopa County ALERT
City of Phoenix
City of Phoenix Lane Control Signs
Maricopa County Department of Tran...
Public Safety Video Distribution System
Existing
Planned