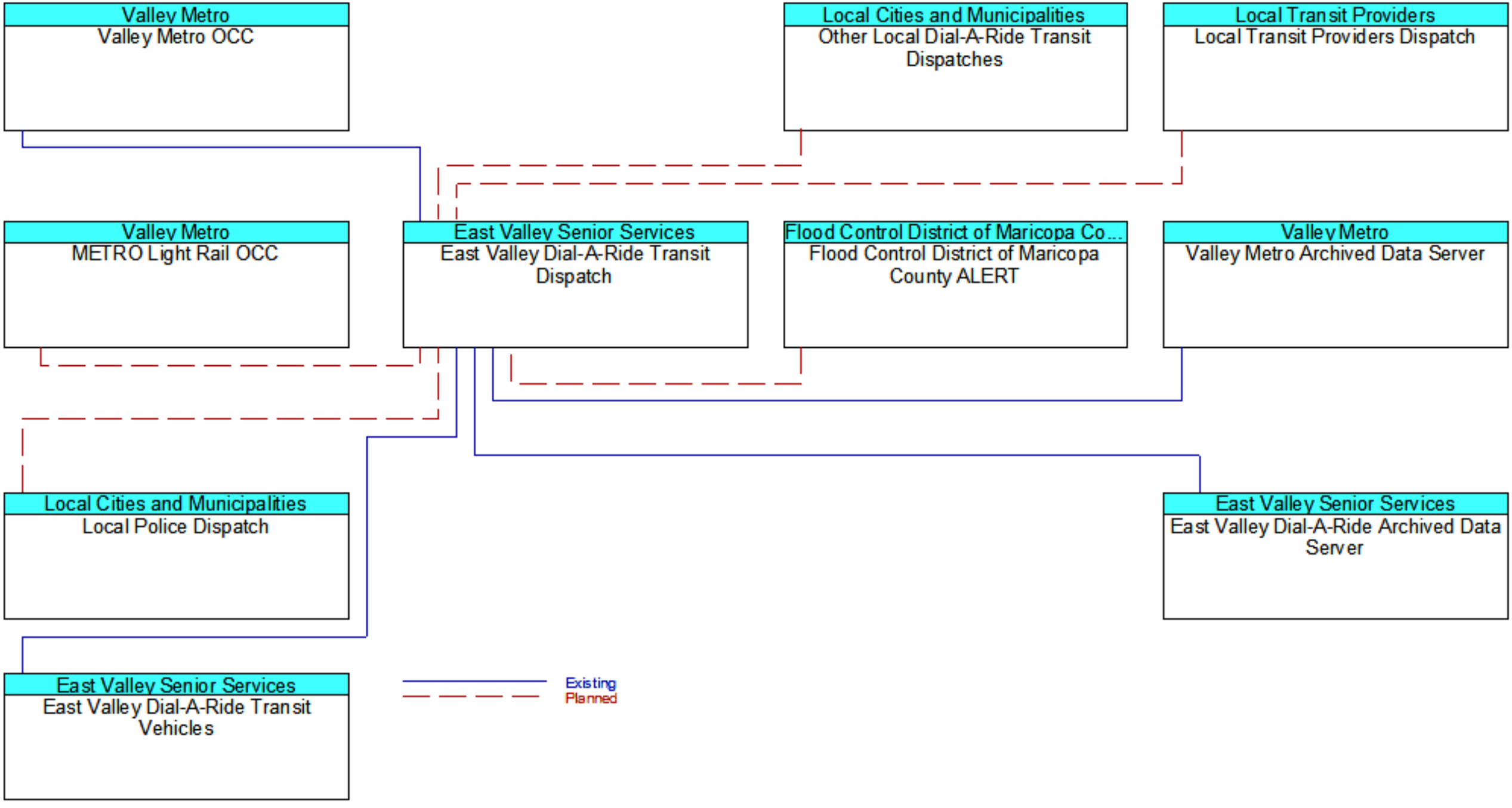
Valley Metro
Valley Metro OCC
Local Cities and Municipalities
Other Local Dial-A-Ride Transit Dispatches
Local Transit Providers
Local Transit Providers Dispatch
Valley Metro
METRO Light Rail OCC
East Valley Senior Services
East Valley Dial-A-Ride Transit Dispatch
Flood Control District of Maricopa Co...
Flood Control District of Maricopa County ALERT
Valley Metro
Valley Metro Archived Data Server
Local Cities and Municipalities
Local Police Dispatch
East Valley Senior Services
East Valley Dial-A-Ride Archived Data Server
East Valley Senior Services
East Valley Dial-A-Ride Transit Vehicles
Existing
Planned