2014 Revision to the

2012 Edition

Uniform Standard Specifications and Details for Public Works Construction

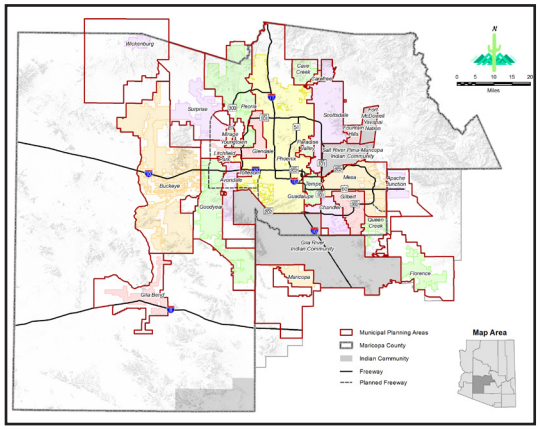

Sponsored and Distributed by the

MARICOPA ASSOCIATION of GOVERNMENTS

January 2014

NEW IN THE 2014 REVISION

Uniform Standard Specifications and Details for Public Works Construction—2014 Revision to the 2012 Edition
The MAG Standard Specifications and Details Committee, with assistance from five specialized working groups, considered 26 cases during the 2013 session. Of these, 23 were approved and included in this revision.

New Specifications:
- Section 602: Trenchless Installation of Steel Casing *(Replaces Section 602: Encasement of Water of Sewer Pipe by Jacking or Tunneling Operation)*
- Section 739: Steel Reinforced Polyethylene Pipe (SRPE)
- Section 740: Polypropylene Pipe and Fittings for Storm Drain, Irrigation, and Sanitary Sewer

Specifications rewritten, or with major updates:
- Section 309: Lime Stabilization or Modification of Subgrade
- Section 321: Placement and Construction of Asphalt Concrete Pavement
- Section 337: Crack Sealing
- Section 340: Concrete Curb, Gutter, Sidewalk, Sidewalk Ramps, Driveway and Alley Entrance
- Section 345: Adjusting Frames, Covers, Valve Boxes, and Water Meter Boxes
- Section 610: Water Line Construction
- Section 711: Paving Asphalt
- Section 729: Expansion Joint Filler

Specifications with minor updates:
- Section 107: Legal Requirements and Responsibility to Public
- Section 108: Commencement, Prosecution and Progress
- Section 301: Subgrade Preparation
- Section 311: Placement and Construction of Cement Treated Subgrade
- Section 324: Portland Cement Concrete Pavement
- Section 415: Flexible Metal Guardrail
- Section 430: Landscaping and Planting
- Section 505: Concrete Structures
- Section 605: Subdrainage
- Section 725: Portland Cement Concrete
- Section 735: Reinforced Concrete Pipe
- Section 795: Landscape Materials

Specifications that have been deleted:
- Section 737: Asbestos-Cement Pipe and Fittings for Storm Drain and Sanitary Sewer

New detail drawing:
- Detail 120: Survey Marker *(Replaces Details 120-1 and 12-2)*

Details that have been updated:
- Detail 201: Asphalt Pavement Edge Details
- Detail 221: Curb and Gutter Transition Type A to Type C Integral Roll Curb, Gutter and Sidewalk
- Detail 230: Sidewalks
- Detail 250-1: Driveway Entrances with Detached Sidewalk
- Detail 270: Frame and Cover
- Detail 391-1: Valve Box Installation and Grade Adjustment
- Detail 501-5: Headwall Drop Inlet

Details that have been deleted:
- Detail 120-2: Survey Marker (for Unincorporated Maricopa County)

Changes made in the previous 2013 Revision to the 2012 Edition

Uniform Standard Specifications and Details for Public Works Construction—2013 Revision to the 2012 Edition
The MAG Standard Specifications and Details Committee, with assistance from five specialized working groups, considered 20 cases during the 2012 session. Of these, 17 were approved and included in this revision.

New Specifications:
- None

Specifications rewritten, or with major updates:
- Section 107: Legal Regulations and Responsibility to Public
- Section 310: Placement and Construction of Aggregate Base
- Section 350: Removal of Existing Improvements
- Section 415: Flexible Metal Guardrail
- Section 701: Aggregate
- Section 702: Base Materials
- Section 710: Asphalt Concrete
- Section 711: Paving Asphalt

Specifications with minor updates:
- Section 108: Commencement, Prosecution and Progress
- Section 317: Asphalt Milling
- Section 321: Placement and Construction of Asphalt Concrete Pavement
- Section 332: Placement and Construction of Asphalt Emulsion Slurry Seal Coat
- Section 505: Concrete Structures
- Section 610: Water Line Construction
- Section 725: Portland Cement Concrete
- Section 728: Controlled Low Strength Materials
- Section 770: Structural and Rivet Steel, Rivets, Bolts, Pins and Anchor Bolts.

Specifications that have been deleted:
- Section 709: Reclaimed Asphalt Pavement
- Section 719: Recycled Asphalt Concrete Hot Mixed

New detail drawings:
- Detail 260: Alley Entrance (With Vertical Curb and Gutter)
- Detail 360-1: Dry Barrel Fire Hydrant Installation
- Detail 360-2: Wet Barrel Fire Hydrant Installation
- Detail 360-3: Fire Hydrant Installation Details

Details that have been updated:
- Detail 160: 6’ Chain Link Fence and Gate (Note correction)
- Detail 201: Asphalt Pavement Edge Details (Added Safety Edge)
- Detail 250-2: Driveway Entrances with Sidewalk Attached to Curb (Modified to have 4’ min. sidewalk width)

UNIFORM STANDARD SPECIFICATIONS for PUBLIC WORKS CONSTRUCTION

SPONSORED and DISTRIBUTED by the

MARICOPA ASSOCIATION of GOVERNMENTS

2014 Revision to the 2012 Edition

ARIZONA

FOREWORD

Publication of these Uniform Standard Specifications and Details for Public Works Construction fulfills the goal of a group of agencies who joined forces in 1966 to produce such a set of documents. Subsequently, in the interest of promoting county-wide acceptance and use of these standards and details, the Maricopa Association of Governments accepted their sponsorship and the responsibility of keeping them current and viable.

These specifications and details, representing the best professional thinking of representatives of several Public Works Departments, reviewed and refined by members of the construction industry, were written to fulfill the need for uniform rules governing public works construction performed for Maricopa County and the various cities and public agencies within Maricopa County who could not afford to promulgate such standards for themselves. Agencies in other regions or climes that desire to use these specifications may need to make adjustments for local conditions.

A uniform set of specifications and details, updated and embracing the most modern materials and construction techniques will reduce conflicts, provide clarity and lower construction costs for the benefit of the public.

Use of these standards for projects outside of the right-of-way should be reviewed by professional engineers and architects and applied with care to insure relevance to the planned work.

Specifications and details should be incorporated into project plans and specifications after careful review by the design engineer or architect of specific project needs. Not all specifications contained herein will apply to all projects. Prepared plans and specifications should clearly call out only those specific uniform specifications and details required for the project.

Uniform specifications and details are not a substitute for good engineering judgment. Unique conditions will arise that are outside the scope of these standards. When this happens, professional engineers and architects are required to use their judgment to amend these standards to best meet site-specific project needs in accordance with the rules set forth by the State of Arizona and policy statements made by the Arizona State Board of Technical Registration.

The Uniform Standard Specifications and Details for Public Works Construction are revised periodically and reprinted to reflect the changing technology of the construction industry. To this end a Specifications and Details Committee has been established as a permanent organization to continually study and recommend changes to the Specifications and Details. Interested parties may address suggested changes and questions to:

Standard Specifications & Details Committee
c/o Maricopa Association of Governments
302 North First Avenue, Suite 300
Phoenix, Arizona, 85003

Suggestions will be reviewed by the committee and appropriate segments of the construction industry and revisions will be published the first of each year. A copy of this publication is available for review on the internet at the website listed below. Please follow the links to the publications page and look for *Uniform Standard Specifications for Public Works Construction and/or Uniform Standard Details for Public Works Construction*:

www.azmag.gov

In the interest of regional uniformity, it is hoped that all using agencies will adopt these standards with minimal changes. It is recognized that because of charter requirements and for other reasons, some agencies will find it necessary to modify or supplement certain requirements. In the interest of regional uniformity, it is strongly recommended that using agencies bring desired modifications to the MAG Committee for consideration and inclusion into these standards.

TABLE OF CONTENTS

PART 100 - GENERAL CONDITIONS

Section	Last Revised	Title	Page
101	2012	Abbreviations and Definitions	101-1
102	2008	Bidding Requirements and Conditions	102-1
103	1999	Award and Execution of Contract	103-1
104	2012	Scope of Work	104-1
105	2008	Control of Work	105-1
106	1998	Control of Materials	106-1
107	2014	Legal Regulations and Responsibility to Public	107-1
108	2014	Commencement, Prosecution and Progress	108-1
109	2011	Measurements and Payments	109-1
110	2000	Notification of Changed Conditions and Dispute Resolution	110-1

PART 200 - EARTHWORK

Section	Last Revised	Title	Page
201	1999	Clearing and Grubbing	201-1
205	1998	Roadway Excavation	205-1
206	2012	Structure Excavation and Backfill	206-1
210	2009	Borrow Excavation	210-1
211	2012	Fill Construction	211-1
215	1998	Earthwork for Open Channels	215-1
220	2012	Riprap Construction	220-1
230	2010	Dust Palliative Application	230-1

PART 300 - STREETS AND RELATED WORK

Section	Last Revised	Title	Page
301	2014	Subgrade Preparation	301-1
306	2010	Mechanically Stabilized Subgrade- Geogrid Reinforcement	306-1
309	2014	Lime Slurry Stabilization or Modification of Subgrade	309-1
310	2013	Placement and Construction of Aggregate Base Course	310-1
311	2014	Placement and Construction of Cement Treated Subgrade	311-1
312	2012	Cement Treated Base	312-1
315	1998	Bituminous Prime Coat	315-1
317	2013	Asphalt Milling	317-1
320	1999	Road-Mixed Surfacing	320-1
321	2014	Placement and Construction of Asphalt Concrete Pavement	321-1
324	2014	Portland Cement Concrete Pavement (PCCP)	324-1
325	2012	Placement and Construction of Asphalt-Rubber Asphalt Concrete	325-1
327	2012	Hot In-Place Recycling	327-1
329	1998	Tack Coat	329-1
330	1998	Asphalt Chip Seal	330-1
331	2009	Microsurfacing Specifications	331-1
332	2013	Placement and Construction of Asphalt Emulsion Slurry Seal Coat	332-1
333	2012	Fog Seal Coats	333-1
334	2012	Preservative Seal for Asphalt Concrete	334-1
335	2012	Placement and Construction of Hot Asphalt-Rubber Seal	335-1
336	2011	Pavement Matching and Surfacing Replacement	336-1
337	2014	Crack Sealing	337-1
340	2014	Concrete Curb, Gutter, Sidewalk, Sidewalk Ramps, Driveway and Alley Entrance	340-1
342	2012	Decorative Pavement Concrete Paving Stone or Brick	342-1
343	1998	Exposed Aggregate Paving	343-1
345	2014	Adjusting Frames, Covers, Valve Boxes Meter Boxes and Pull Boxes	345-1
350	2013	Removal of Existing Improvements	350-1
355	2011	Utility Potholes-Keyhole Method	355-1
360	1998	Telecommunications Installation	360-1

PART 400 - RIGHT-OF-WAY AND TRAFFIC CONTROL

Section	Last Revised	Title	Page
401	1998	Traffic Control	401-1
405	1998	Monuments	405-1
410	1998	Precast Safety Curbs	410-1
415	2014	Flexible Metal Guardrail	415-1
420	1998	Chain Link Fences	420-1
424	1998	Parkway Grading	424-1
425	1998	Topsoils	425-1
430	2014	Landscaping and Planting	430-1
440	1999	Sprinkler Irrigation System Installation	440-1

PART 500 - STRUCTURES

Section	Last Revised	Title	Page
505	2014	Concrete Structures	505-1
506	2012	Precast Prestressed Concrete Members	506-1
510	1998	Concrete Block Masonry	510-1
511	1998	Brick Masonry	511-1
515	1998	Steel Structures	515-1
520	2012	Steel and Aluminum Handrails	520-1
525	1998	Pneumatically Placed Mortar	525-1
530	2000	Painting	530-1

PART 600 – WATER, SEWER, STORM DRAIN AND IRRIGATION

Section	Last Revised	Title	Page
601	2012	Trench Excavation, Backfilling and Compaction	601-1
602	2014	Trenchless Installation of Steel Casing	602-1
603	2012	Installation for High Density Polyethylene Pipe	603-1
604	2012	Placement of Controlled Low Strength Material	604-1
605	2014	Subdrainage	605-1
610	2014	Water Line Construction	610-1
611	2011	Disinfecting Water Mains	611-1
615	2007	Sewer Line Construction	615-1
616	2002	Reclaimed Water Line Construction	616-1
618	2011	Storm Drain Construction	618-1
620	2012	Cast-in-place Concrete Pipe	620-1
621	1998	Corrugated Metal Pipe and Arches	621-1
625	2012	Manhole Construction and Drop Sewer Connections	625-1
630	2012	Tapping Sleeves, Valves and Valve Boxes on Water Lines	630-1
631	2012	Water Taps and Meter Service Connections	631-1

PART 700 - MATERIALS

Section	Last Revised	Title	Page
701	2013	Aggregate	701-1
702	2013	Base Materials	702-1
703	2012	Riprap	703-1
705	2012	Portland Cement Treated Base	705-1
708	2011	Asphalt Pavement Core Bonding Materials	708-1
710	2013	Asphalt Concrete	710-1
711	2014	Paving Asphalt	711-1
712	1999	Liquid Asphalt	712-1
713	2012	Emulsified Asphalts Materials	713-1
714	2012	Microsurfacing Materials	714-1
715	2012	Slurry Seal Materials	715-1

Section	Last Revised	Title	Page
716	2012	Cover Material	716-1
717	2012	Asphalt-Rubber Asphalt Concrete	717-1
718	2012	Preservative Seal for Asphalt Concrete	718-1
725	2014	Portland Cement Concrete	725-1
726	1998	Concrete Curing Materials	726-1
727	2008	Steel Reinforcement	727-1
728	2013	Controlled Low Strength Material	728-1
729	2014	Expansion Joint Filler	729-1
735	2014	Reinforced Concrete Pipe	735-1
736	2012	Non-Reinforced Concrete Pipe	736-1
738	2012	High Density Polyethylene Pipe And Fittings for Storm Drain And Sanitary Sewer	738-1
739	2014	Steel Reinforced Polyethylene Pipe And Fittings for Storm Drain, Irrigation And Sanitary Sewer	739-1
740	2014	Polypropylene Pipe And Fittings for Storm Drain, Irrigation And Sanitary Sewer	740-1
741	2011	Lining for Reinforced Concrete Sanitary Sewer Pipe	741-1
743	1998	Vitrified Clay Pipe	743-1
744	1998	ABS Truss Pipe and Fittings	744-1
745	1998	PVC Sewer Pipe and Fittings	745-1
750	2005	Iron Water Pipe and Fittings	750-1
752	1998	Asbestos-Cement Water Pipe and Fittings	752-1
753	2000	Galvanized Pipe and Fittings	753-1
754	2012	Copper Pipe, Tubing and Fittings	754-1
755	2012	Polyethylene Pipe for Water Distribution	755-1
756	2008	Dry Barrel Fire Hydrants	756-1
757	1998	Sprinkler Irrigation System	757-1
758	2005	Concrete Pressure Pipe - Steel Cylinder Type	758-1
759	2002	Steel Pipe	759-1
760	1998	Coating Corrugated Metal Pipe and Arches	760-1
761	1998	Structural Plate Pipe, Arches, and Pipe Arches	761-1
770	2013	Structural and Rivet Steel, Rivets, Bolts, Pins, and Anchor Bolts	770-1
771	2005	Galvanizing	771-1
772	2012	Chain Link Fence	772-2
775	1999	Brick and Concrete Masonry Units (Blocks)	775-1
776	2012	Masonry Mortar and Grout	776-1
778	1998	Lumber	778-1
779	1998	Wood Preservatives	779-1
787	1999	Gray Iron Castings	787-1
790	1999	Paint	790-1
792	2010	Dust Palliative	792-1
795	2014	Landscape Material	795-1
796	2010	Geosynthetics	796-1
	2014	Index	Index-1

This Page Reserved for Future Use

PART 100

GENERAL CONDITIONS

Section	Last Revised	Title	Page
101	2012	Abbreviations and Definitions	101-1
102	2008	Bidding Requirements and Conditions	102-1
103	1999	Award and Execution of Contract	103-1
104	2012	Scope of Work	104-1
105	2008	Control of Work	105-1
106	1998	Control of Materials	106-1
107	2014	Legal Regulations and Responsibility to Public	107-1
108	2014	Commencement, Prosecution and Progress	108-1
109	2011	Measurements and Payments	109-1
110	2000	Notification of Changed Conditions and Dispute Resolution	110-1

This Page Reserved for Future Use

SECTION 107

LEGAL REGULATIONS AND RESPONSIBILITY TO PUBLIC

107.1 COMPLIANCE WITH LAWS:

The Contractor shall keep fully informed of, observe and comply with all Federal and State laws, County and City ordinances, regulations, codes and all orders and decrees of bodies or tribunals having any jurisdiction or authority, which in any way affect the conduct of the work. The Contractor warrants that all items supplied and work performed under the contract have been sold, produced, delivered and furnished in strict compliance with all such laws, ordinances, regulations, codes, orders and decrees to which the items, work and Contractor are subject. Upon request, Contractor shall execute and deliver to the Agency such documents as may be required by the Agency to evidence compliance with such laws, ordinances, regulations, codes, orders and decrees. The Contractor shall protect and indemnify the Contracting Agency and its representatives against any claim or liability arising from or based on the violation of such, whether by the Contractor or the Contractor's employees.

107.2 PERMITS:

Permits, bonding and insurance requirements shall be as required by statutes, codes, ordinances or regulations.

The Public Agency, when acting as the Contracting Agency, may obtain some of the required permits. It is the duty of the Contractor to determine that all necessary permits have been obtained. The Contractor shall, at the Contractor's own expense, obtain all the required permits which have not been furnished. The Contractor shall comply with all permit requirements until the Contract is completed or the permit is closed-out or transferred. The Contractor shall be responsible to close out all permits except those authorized by special provision to be transferred.

In all cases, the Contractor or the person supervising the authorized work shall notify the appropriate permit agency so as to insure proper inspection by the agency concerned.

107.3 PATENTED DEVICES, MATERIALS AND PROCESSES:

If the Contractor employees any design, device, material, or process covered by letters of patent or copyright, he shall provide for such use by suitable legal agreement with the patentee or owner. The Contractor and the surety shall indemnify and save harmless the Contracting Agency, any affected third party or political subdivision from any and all claims for infringement by reason of the use of any such patented design, device, material or process, or any trademark or copyright, and shall indemnify the Contracting Agency for any costs, expenses, and damages which it may be obligated to pay by reason of any infringement, at any time during the prosecution or after the completion of the work.

107.4 ARCHAEOLOGICAL REPORTS:

Attention is directed to Sections 41-844 and 41-865 Arizona Revised Statues. In view of the above, it shall be a provision of every contract that when archaeological features are encountered or unearthed in the excavation of material pits or of the roadway prism, or other excavation, the Contractor shall report promptly to the Director of the Arizona State Museum and the Contracting Agency. The Contractor will be allowed extra time as appropriate in accordance with the provisions of Section 108.

107.5 SAFETY, HEALTH AND SANITATION PROVISIONS:

The Contractor shall provide and maintain in a neat, sanitary condition such accommodations for the use of his employees as may be necessary to comply with the requirements and regulations of the Arizona State Department of Health or as specified by the Maricopa County Health Department, Sanitary Code.

The Contractor shall provide all safeguards, safety devices and protective equipment and take any other needed actions, on his own responsibility or as the Engineer may determine, reasonably necessary to protect the life and the health of employees on the job, the safety of the public and to protect property in connection with the performance of the work covered by the contract.

Precaution shall be exercised by the Contractor at all times for the protection of persons (including employees) and property. The Contractor shall comply with the provisions of all applicable laws, pertaining to such protection including all Federal and State occupational safety and health acts, and standards and regulations promulgated there under.

107.5.1 Asbestos Materials: If asbestos materials are encountered during any building remodeling/demolition work, the Contractor shall comply fully with the Arizona Administrative Code, A.A.C. R18-2-901 and notify the Engineer. An extension of contract time will be granted for any delay resulting from the asbestos material in accordance with Section 108.

107.5.2 Lead-Containing Paint: Paint and similar surface coating materials that contain lead compounds and in which the lead content exceeds 0.06 percent of the total weight of the non-volatile content of the paint or the weight of the dried paint film is declared a banned hazardous product and will not be used (Consumer Product Safety Act Part 1303 dated 9-1-77).

107.6 PUBLIC CONVENIENCE AND SAFETY:

The Contractor shall at all times so conduct his work as to assure the least possible obstruction to traffic and adjacent residents. The safety, convenience, and the protection of persons and property, of the general public and residents along the street, highway, and areas adjacent to the work area shall be provided for by the Contractor.

107.6.1 Contractor's Marshaling Yard: If the Contractor or his subcontractor utilizes property outside the limits of the project in the performance of the contract, the Contractor/subcontractor shall comply with the following:

107.6.1.1 Contractor's Marshaling Yard when the Agency is the Contracting Party:

(A) Prior to occupying the property, the Contractor shall provide written notification as to the number and location of all properties to be used. The notification shall specify in detail how the Contractor proposes to use each property and how he proposes to comply with (B) through (D) below. Also, the Contractor shall provide a statement, signed by the property owner(s), which gives the Contractor permission to use the property.

(B) The property(s) shall be adequately maintained to control dust, mud, trash and other pollutants from leaving the property.

(C) Work on the property(s) shall be scheduled so as to comply with the Agency Noise Ordinance.

(D) Use of the property(s) such as location of stored materials, service of equipment, etc., shall be conducted to minimize impact on adjacent properties.

(E) The Contractor shall leave the property in a condition, as determined by the Engineer, equivalent to that which existed prior to entry. In no case shall any use cause, or allow to remain, any negative impact to adjoining properties or right-of-way unless such impact existed prior to the Contractors' use.

(F) The Contractor shall obtain a written release signed and dated from each property owner after completion of use. Each release shall state that, at the time of signing, the owner accepts the property in its present condition from the Contractor and relieves the Contractor and the Agency from any or all claims for the use or damage to said property. A copy of each release shall be submitted to the Engineer.

(G) This Subsection also applies to all levels of subcontractors who will need to obtain marshaling yards for the project, which will be separate from that of the Contractor. It will be the responsibility of the Contractor to obtain copies of the various documents from the subcontractors, as required above, and provide them to the Engineer.

107.6.1.2 Contractor's Marshaling Yard when the Agency is not the Contracting Party (private development, utility work, subdivision construction, etc): All conditions will apply as in Subsection 107.6.1.1 except that the permit holder will be responsible for obtaining all documents. The permit holder will retain the documents and make them available to the Agency upon request.

107.6.2 The Contractor shall comply with the Agency Code concerning work hours and noise level during construction.

107.7 BARRICADES AND WARNING SIGNS:

The Contractor shall provide, erect, and maintain all necessary barricades, suitable and sufficient lights, danger signals, signs

and other traffic control devices, and shall take all necessary precautions for the protection of the work and safety of the public. Roads, partially or fully closed to traffic, shall be protected by effective barricades, and obstructions shall be illuminated during hours of darkness. Suitable warning signs shall be provided to properly control and direct traffic.

The Contractor shall erect warning signs in advance of any place on the project where operations may interfere with the use of the road by traffic, and at all intermediate points where the new work crosses or coincides with an existing road. Such warning signs shall be constructed and erected in accordance with the Traffic Barricade Manual prepared or adopted by the Contacting Agency's Traffic Engineering Department which is hereby made a part of these specifications.

107.8 USE OF EXPLOSIVES:

The use of explosives or blasting agents is controlled by the Uniform Fire Code, which is generally administered by the Fire Department of the Agency. The Contractor shall obtain a special permit from the Agency's Fire Department for the use of explosives. A copy of this permit shall be delivered to the Engineer prior to the use of explosives. If the Agency does not use the Uniform Fire Code or have a department for enforcement of this Code, the Contractor shall use explosives only when authorized in writing by the Engineer. The approval by the Engineer for the use of explosives shall not relieve the Contractor from his responsibilities for proper use and handling of the explosives or for any and all damages resulting from their use.

Explosives shall be transported, stored, handled and used in accordance with the provisions and requirements of all applicable laws, ordinances and regulations. Work shall be done in accordance with recommendations of the AGC Manual of Accident Prevention in Construction, the Institute of Makers of Explosives, and the Occupational Safety and Health Administration Regulations (29 CFR 1926.1(U)). In addition to the applicable regulations, the Contractor shall:

(A) Exercise the utmost care not to endanger life or damage property.

(B) Furnish and erect special signs to warn the public of his blasting operations. They shall be located and maintained so as to be clearly evident to the public during all critical periods of blasting operations.

(C) Notify each public utility company, having structures adjacent to the work, of his intention to use explosives. Such notice shall be given sufficiently in advance to enable the companies to advise the Contractor of any precautions that should be taken to protect their structures from damage.

(D) Make a survey of adjacent properties, before commencing blasting operations, locating on drawings and by photographs all existing cracks and damages to structures. A copy shall be filed with the Engineer, including a report.

(E) Blasting shall be accomplished in such a manner that nearby buildings, structures, railways, highways, etc. will be safe from rocks and other projectiles. Adequate blasting mats or other means of protection shall be employed when blasting in congested area or close proximity to any of the above improvements. Steel mats shall not be allowed within 2,000 feet of power lines.

(F) At the time of firing, the Contractor shall station men along the road at sufficient distance from the blasting operation to flag down any vehicles.

The Contracting Agency reserves the right to order the discontinuance of blasting operations at any time.

107.9 PROTECTION AND RESTORATION OF PROPERTY AND LANDSCAPE:

The Contractor shall be responsible for the preservation of all public and private property and shall protect carefully from disturbance or damage all land monuments and property marks until the Engineer has witnessed or otherwise referenced their location and shall not move them until directed.

SECTION 107

The Contractor shall be responsible for all damage or injury to property of any character, during the prosecution of the work, resulting from any act, omission, neglect, or misconduct in his manner or method of executing the work, or at any time due to defective work or materials, and said responsibility will not be released until the project shall have been completed and accepted.

When or where any direct or indirect damage or injury is done to public or private property by or on account of any act, omission, neglect, or misconduct in the execution of the work, or in consequence of the nonexecution thereof by the Contractor, he shall restore, at no cost to the Contracting Agency, such property to a condition similar or equal to that existing before such damage or injury was done, by repairing, rebuilding, or otherwise restoring as may be directed, or he shall make good such damage or injury in an acceptable manner. Such damage will include but not be limited to landscaped areas. The contractor shall regrade the disturbed area as directed and restore the surface material to match existing in type and quality.

When construction is within temporary construction easements, the Contractor shall restore all disturbed areas to a condition equal to or better than the existing improvements. Such restoration will include but not be limited to asphalt, walkways, fences, lights, sprinklers, landscaping, etc. In the case of landscaping, the Contractor may remove and store sod and plant material. If, in the determination of the Engineer, the sod and/or plant material did not survive the transplanting in good condition, the Contractor shall replace the sod and/or plant material to match in type and quality. Also, the Contractor may salvage any sprinkler system materials, lighting materials, etc. In the event that it is not feasible to reinstall the salvaged material, new material shall be installed.

The Contractor shall not dump spoil or waste material on private property without first obtaining from the owner written permission for such dumping. All such dumping shall be in strict conformance with the Grading and Drainage Ordinance of the Contracting Agency.

Access to private property shall be maintained to keep inconvenience to the property owner to a minimum. Prior to any construction in front of driveways the Contractor shall notify the property owner 24 hours in advance. Inconvenience caused by construction across driveways and sidewalks shall be kept to a minimum by restoring the serviceability as soon as possible. If it is necessary to leave open excavation for a long period of time, the Contractor shall provide structurally adequate steel plates to bridge the excavation.

107.10 CONTRACTOR'S RESPONSIBILITY FOR WORK:

The Contractor shall properly guard, protect, and take every precaution necessary against injury or damage to all finished or partially finished work, by the action of the elements or from any other cause until the entire project is completed and accepted by the Engineer. The Contractor shall rebuild, repair, restore, and make good all injuries or damages to any portion of the work before final acceptance at no cost to the Contracting Agency. Partial payment for completed portions of the work shall not release the Contractor from such responsibility.

In case of suspension of the work for any cause whatever, the Contractor shall be responsible for the project and shall take such precautions as may be necessary to prevent damage to the project and shall erect any necessary temporary structures, signs, or other facilities at no cost to the Contracting Agency.

107.11 CONTRACTOR'S RESPONSIBILITY FOR UTILITY PROPERTY AND SERVICES:

At points where the Contractor's operations are adjacent to properties of utility firms or other property, damage to which might result in considerable expense, loss, or inconvenience, work shall not commence until all arrangements necessary for the protection thereof have been made.

The Contractor shall cooperate with the owners of any underground or overhead utilities in their removal and rearrangement operations in order that these operations may progress in a reasonable manner, that duplication of work may be reduced to a minimum, and that services rendered by those parties will not be unnecessarily interrupted.

If any utility service is interrupted as a result of accidental breakage, the Contractor shall promptly notify the proper authority and shall cooperate with the said authority in the restoration of service. No work shall be undertaken around fire hydrants until provisions for continued service have been approved by the local fire authority.

The Contractor shall expose all underground utilities and structures which might interfere with the construction of the project, in order to permit survey location prior to construction.

The Contractor shall assume full responsibility for damages to any underground facility/utility as a result of failing to obtain information as to its location, failing to excavate in a careful, prudent manner or failing to take measures for protection of the facilities/utilities. The Contractor is liable to the owner of the underground facility/utility for the total cost of the repair.

107.12 FURNISHING RIGHT-OF-WAY:

The Contracting Agency will provide right-of-way and easements for all work in advance of construction. Any exceptions will be indicated in the special provisions.

107.13 PERSONAL LIABILITY OF PUBLIC OFFICIALS:

In carrying out any provisions of these specifications, or in exercising any power or authority granted to them by or within the scope of the contact, there shall be no liability upon the Contracting Agency, Engineer, or their authorized representatives, either personally or as officials of the Contracting Agency, it being understood that in all such matters they act solely as agents and representatives of the Contracting Agency.

107.14 NO WAIVER OF LEGAL RIGHTS:

Upon completion of the work, the Contacting Agency will expeditiously make final inspection and notify the Contractor of acceptance. Such final acceptance, however, shall not preclude or stop the Contracting Agency from correcting any measurement, estimate, or certificate made before or after completion of the work, nor shall the Contracting Agency be precluded or stopped from recovering from the Contractor or his surety, or both, such overpayment as it may sustain, or by failure on the part of the Contractor to fulfill his obligations under the contract. A waiver on the part of the Contracting Agency of any breach of any part of the contract shall not be held to be a waiver of any other or subsequent breach.

The Contractor, without prejudice to the terms of the contract and in addition to any specific remedy provided the Contracting Agency in the contract documents, shall be liable to the Contracting Agency for latent defects, fraud or such gross mistakes as may amount to fraud, or as regards the Contracting Agency's rights under any warranty or guaranty or remedy required by law.

- End of Section -

This Page Reserved for Future Use

All equipment which is proposed to be used on the work shall be of sufficient size and in such mechanical condition as to meet requirements of the work and to produce a satisfactory quality of work. Equipment used on any portion of the project shall be such that it will not damage property adjacent to the work area.

When the methods and equipment to be used by the Contractor in accomplishing the construction are not prescribed, the Contractor is free to use any methods or equipment that he demonstrates to the satisfaction of the Engineer will accomplish the work in conformity with the requirements of the specifications.

When the specifications state the construction shall be performed by the use of certain methods and equipment, such methods and equipment shall be used unless others are authorized by the Engineer. If the Contractor desires to use a method or type of equipment other than those specified, he may request authority from the Engineer to do so. The request shall be in writing and shall include a full description of the methods and equipment proposed to be used and an explanation of the reasons for desiring to make the change. If approval is given, it will be on the condition that the Contractor will be fully responsible for producing construction work in conformity with the specifications. If, after trial use of the substituted methods or equipment, the Engineer determines that the work produced does not meet the specifications, the Contractor shall discontinue the use of the substitute method or equipment and shall complete the remaining construction with the specified methods and equipment. The Contractor shall remove the deficient work and replace it with work of specified quality, or take such other corrective action as the Engineer may direct. No change will be made in basis of payment for the construction items involved nor in contract time as result of authorizing a change in methods or equipment under these provisions.

108.7 DETERMINATION AND EXTENSION OF CONTRACT TIME:

The number of calendar days allowed for the completion of the work included in the contract will be as stated in the proposal and will be known as the contract time.

When the contract time is on a calendar day basis it shall consist of the number of calendar days specified, including all weekends and legal holidays. All calendar days elapsing between the effective dates of any written notice from the Engineer to suspend work and to resume work following suspensions, not the fault of the Contractor, shall be excluded.

When the contract completion time is a fixed calendar date it shall be the date on which all work on the project shall be completed and meet final inspection.

If the Contractor finds it impossible for reasons beyond his control to complete the work within contract time as specified or as extended, he shall immediately submit a written request to the Engineer for an extension of time setting forth therein the reasons which he believes will justify the granting of his request. The Contractor's plea that insufficient time was specified is not a valid reason for extension of time. If the Engineer* finds that the work was delayed because of conditions beyond the control and through no fault of the Contractor, he may extend the time for completion in such amount as the conditions justify. The extended time for completion shall then be in full force and effect the same as though it were the original time for completion.

108.8 GUARANTEE AND WARRANTY PROVISIONS:

The Contractor shall guarantee the work against defective workmanship and materials for a period of one year from the date of its final acceptance under the contract, ordinary wear and tear and unusual abuse or neglect excepted.

Any omission on the part of the Engineer to condemn defective work or materials at the time of construction shall not be deemed an acceptance, and the Contractor will be required to correct defective work or materials at any time before final acceptance and within one year thereafter.

*For Improvement District Project: The words “Superintendent of Streets” will be substituted for the word “Engineer.” Any extension of contract time will be determined by the Superintendent of Streets with the consent of the governing body

Should any defects develop within one year from the date of final acceptance due to faults in workmanship or materials the Contractor shall, within 14 calendar days of receipt of written notice from the Contracting Agency begin making the necessary repairs to the satisfaction of the Engineer. Such work shall include the repair or replacement of other work or materials damaged or affected by making the above repairs or corrective work, all at no additional cost to the Contracting Agency.

If defects develop which are determined by the Engineer to be an emergency, the Engineer shall notify the Contractor, via the most expeditious means, regarding the nature and condition of the defects. In turn, the Contractor shall immediately dispatch necessary forces to correct the defect or the emergency condition. If the Contractor, in his initial action, resolves the emergency condition but not the defect, a letter as discussed above will follow and normal procedures for corrections will be employed. If immediate or appropriate action, satisfactory to the Engineer, is not taken by the Contractor, or if the Contractor cannot be contacted, the Engineer will deploy necessary forces to correct and/or secure the deficiency. Costs of the Engineer's action shall be paid by the Contractor and/or his bonding agency. Should it later be determined that the defects requiring such emergency action are not the responsibility of the Contractor, the Contractor will be paid for all costs incurred as a result of these demands in accordance with Subsection 109.5. Such action by the Engineer will not relieve the Contractor of the guarantees required by this Section or elsewhere in the Contract Documents.

In case of work, materials, or equipment for which written warranties are required by the special provisions, the Contractor shall provide or secure from the appropriate Subcontractor or supplier such warranties addressed to and in favor of the Contracting Agency and deliver same to the Engineer prior to final acceptance of the work. Delivery of such warranties shall not relieve the Contractor from any obligation assumed under any other provisions of the contract.

The warranties and guarantees provided in this subsection of the contract documents shall be in addition to and not in limitation of any other warranties, guarantees or remedies required by law.

108.9 FAILURE TO COMPLETE ON TIME:

For each and every calendar day that work shall remain incompleted after the time specified for the completion of the work in the proposal, or as adjusted by the Engineer, the sum per calendar day shown in Table 108-1, unless otherwise specified in the proposal form, may be deducted from monies due to or to become due to the Contractor, not as a forfeit or penalty but as liquidated damages. This sum is fixed and agreed upon between the parties because the actual loss to the Contracting Agency and to the public caused by delay in completion will be impractical and extremely difficult to ascertain and determine.

Permitting the Contractor to continue and finish the work or any part of it after the time fixed for its completion, or after the date to which the time fixed for its completion may have been extended, will in no way operate as a waiver on the part of the Contracting Agency of any of its rights under the contract.

TABLE 108-1		
LIQUIDATED DAMAGES		
Original Contract Amount		**Daily Charges**
From More Than	To and Including	Calendar Day or Fixed Date
$ 0	$ 25,000	$ 210
25,000	50,000	250
50,000	100,000	280
100,000	500,000	430
500,000	1,000,000	570
1,000,000	2,000,000	710
2,000,000	5,000,000	1,070
5,000,000	10,000,000	1,420
10,000,000	—	1,780

*For Improvement District Project: The words “Superintendent of Streets” will be substituted for the word “Engineer.” Any extension of contract time will be determined by the Superintendent of Streets with the consent of the governing body

PART 300

STREETS AND RELATED WORK

Section	Last Revised	Title	Page
301	2014	Subgrade Preparation	301-1
306	2010	Mechanically Stabilized Subgrade-Geogrid Reinforcement	306-1
309	2014	Lime Slurry Stabilization or Modification of Subgrade	309-1
310	2013	Placement and Construction of Aggregate Base Course	310-1
311	2014	Placement and Construction of Cement Treated Subgrade	311-1
312	2012	Cement Treated Base	312-1
315	1998	Bituminous Prime Coat	315-1
317	2013	Asphalt Milling	317-1
320	1999	Road-mixed Surfacing	320-1
321	2014	Placement and Construction of Asphalt Concrete Pavement	321-1
324	2014	Portland Cement Concrete Pavement (PCCP)	324-1
325	2012	Placement and Construction of Asphalt-Rubber Asphalt Concrete	325-1
327	2012	Hot In-Place Recycling	327-1
329	1998	Tack Coat	329-1
330	1998	Asphalt Chip Seal	330-1
331	2009	Microsurfacing Specifications	331-1
332	2013	Placement and Construction of Asphalt Emulsion Slurry Seal Coat	332-1
333	2012	Fog Seal Coats	333-1
334	2012	Preservative Seal for Asphalt Concrete	334-1
335	2012	Placement and Construction of Hot Asphalt-Rubber Seal	335-1
336	2011	Pavement Matching and Surfacing Replacement	336-1
337	2014	Crack Sealing	337-1
340	2014	Concrete Curb, Gutter, Sidewalk, Sidewalk Ramps, Driveway and Alley Entrance	340-1
342	2006	Decorative Pavement Concrete Paving Stone or Brick	342-1
343	1998	Exposed Aggregate Paving	343-1
345	2014	Adjusting Frames, Covers, Valve Boxes Meter Boxes and Pull Boxes	345-1
350	2013	Removal of Existing Improvements	350-1
355	2011	Utility Potholes-Keyhole Method	355-1
360	1998	Telecommunications Installation	360-1

This Page Reserved for Future Use

SECTION 301

SUBGRADE PREPARATION

301.1 DESCRIPTION:

This Section shall govern the preparation of natural or excavated areas prior to the placement of sub-base material, pavement, curbs and gutters, driveways, sidewalks or other structures. It shall include stripping and disposal of all unsuitable material including existing pavement and obstructions such as stumps, roots, rocks, etc., from the area to be paved.

301.2 PREPARATION OF SUBGRADE:

With the exception of areas where compacted fills have been constructed as specified in Section 211, in the areas where new construction is required, the moisture content shall be brought to that required for compaction by the addition of water, by the addition and blending of dry, suitable material or by the drying of existing material. The material shall then be compacted to the specified relative density. If pumping subgrade should become evident at any time prior to paving, the Engineer may require proof rolling with a pneumatic-tire roller or other approved equipment in order to identify the limits of the unacceptable area. The proof rolling will be performed at no additional cost to the Contracting Agency.

Subgrade preparation shall also include preparing the subgrade to the required line and grade for paved or unpaved shoulders, tapers, turnouts, and driveways, and at all other project locations where aggregate base and/or select material courses are used in accordance with the Project Plans.

301.2.1 The Contractor may use removed existing asphalt concrete and other existing bituminous roadway surfacing materials originating on the project site, as embankment fill. All materials used shall be thoroughly crushed to sizes not exceeding four inches, or as approved by the Engineer. These asphalt/bituminous materials shall be placed not less than two feet below finished subgrade elevation.

Project earthwork quantities when included as separate contract pay items will include removed asphalt/bituminous material volumes, unless otherwise specified in the Special Provisions.

All unsuitable material and all excess material shall be disposed of in accordance with the requirements of Sections 205.2 and 205.6, respectively. When additional material is required for fill, it shall conform to Section 210.

301.3 RELATIVE COMPACTION:

The subgrade shall be scarified and loosened to a depth of 6 inches. Rock 6-inches or greater in size that becomes exposed due to scarification shall be removed from the scarified subgrade. When fill material is required, a layer of approximately 3 inches may be spread and compacted with the subgrade material to provide a better bond. The subgrade cut and fill areas shall be constructed to achieve a uniform soil structure having the following minimum compaction, measured as a percentage of maximum dry density when tested in accordance with AASHTO T-99, Method A, and T191 or ASTM D6938 with the percent of density adjusted in accordance with the rock correction procedures for maximum density determination, ARIZ-227c[1] to compensate for the rock content larger than that which will pass a No. 4 sieve. Unless otherwise noted in the project plans or project specifications, compaction shall be performed within 2 percentage points of the optimum moisture content.

(A) Below pavement, curb and gutter, attached sidewalk, roadway shoulders, and other areas within right-of-way subject to vehicular traffic — 95 percent

(B) Below detached sidewalk not subject to vehicular traffic — 85 percent

301.4 SUBGRADE TOLERANCES:

Subgrade upon which pavement, sidewalk, curb and gutter, driveways, or other structures are to be directly placed shall not vary more than 1/4 inch from the specified grade and cross-section. Subgrade upon which sub-base or base material is to be placed shall not vary more than 3/4 inch from the specified grade and cross-section. Variations within the above specified tolerances shall be compensating so that the average grade and cross-section specified are met.

[(1)] Arizona Department of Transportation test method.

301.5 GRADING OF AREAS NOT TO BE PAVED:

Areas where grade only is called for on the plan shall be graded to meet the tolerances for the subgrade where subbase or base material is to be placed. The surface shall be constructed to a straight grade from the finished pavement elevations shown on the plans to the elevation of the existing ground at the extremities of the area to be graded.

301.6 PROTECTION OF EXISTING FACILITIES:

The Contractor shall exercise extreme caution to prevent debris from falling into manholes or other structures. In the event that debris should fall into a structure it shall immediately be removed.

301.7 MEASUREMENT:

Measurement for Subgrade Preparation will be by the square yard. The area to be measured will be the total accepted area of new asphalt concrete pavement and new portland cement concrete pavement (PCCP), including paved shoulders, tapers, turnouts, and unpaved roadway shoulders. Subgrade Preparation area measured will also include the accepted surface area of driveways that are surfaced with aggregate base, or select materials and non-surfaced areas designated for vehicle traffic.

Except for PCCP, the area under portland cement concrete surfaces such as concrete curb and gutter, sidewalk, concrete driveways and driveway entrances, and concrete alley entrances will not be included in the Subgrade Preparation measurement.

Project earthwork quantities for Roadway Excavation, Borrow Excavation, and Fill Construction shall not be separately measured when they are not listed as separate line items on the fee proposal form. In such case, unless otherwise specified, payment for said earthwork items shall be included in the unit price for Subgrade Preparation.

301.8 PAYMENT:

Payment for Subgrade Preparation will be made only when it is performed for street or roadway paving projects.

Payment shall be compensation in full for stripping, scarifying, grading, excavating, hauling, filling, compacting, and disposing of excess or unsuitable materials, together with all costs incidental thereto.

- End of Section -

Revised 2014

[(1)] Arizona Department of Transportation test method.

SECTION 309

LIME STABILIZATION OR MODIFICATION OF SUBGRADE

309.1 DESCRIPTION:

This section shall consist of constructing a mixture of soil, lime and water for the stabilization or modification of subgrade soils. The work shall be performed in conformity with the lines, grades thickness, and typical cross sections shown on the plans.

According to the National Lime Association, "Stabilization: When adequate quantities of lime and water are added, the pH of the soil quickly increases to above 10.5, which enables the clay particles to break down. Determining the amount of lime necessary is part of the design process and is approximated by tests such as the Eades and Grim test (ASTM D3276). Silica and alumina are released to react with calcium from the lime to form calcium-silicate-hydrates (CSH) and calcium-aluminate-hydrates (CAH). CSH and CAH are cementitious products similar to those formed in Portland cement. They form the matrix that contributes to strength of lime-stabilized soil layers. As this matrix forms, the soil is transformed from a sandy, granular material to a hard, relatively impermeable layer with significant load bearing capacity. The process begins within hours and can continue for years in a properly designed system. The matrix formed is permanent, durable, and significantly impermeable, producing a structural layer that is both strong and flexible."

Lime modification may be used to "Dry-up of wet soil at a construction sites" or "include treating fine-grained soils or granular base materials to construct temporary haul roads or construction platforms."

309.2 MATERIALS:

309.2.1 Soil or Subgrade: For lime stabilization applications, the soil or subgrade material used for this work shall consist of materials on the site or imported, and shall be free of roots, sod, weeds and stones larger than 3 inches and have a plasticity index (PI) greater than 10, when tested in accordance with AASHTO T-146 Method A, AASHTO T-89 Method A, and T-90. For lime modification applications, the allowable soil or subgrade properties will be determined by the Engineer.

309.2.2 Quicklime and Hydrated Lime: Lime used shall be either quicklime or hydrated lime and shall conform to the requirements of ASTM C977. All lime shall come from a single source. If a source change is requested, a new mix design shall be submitted using lime from the proposed new source. The new design must be approved by the Engineer prior to use.

309.2.3 Lime Slurry: Lime slurry shall be a pumpable suspension of solids in water. The solids portion of the mixture, when considered on the basis of solids content, shall consist principally of hydrated lime of a quality and fineness sufficient to meet Section 309.2.2 requirements. A certificate of compliance shall be provided to the Engineer for each load of lime applied at the project.

309.2.4 Water: Water used for mixing or curing shall be reasonably clean and free of oil, salt, acid, alkali, sugar, vegetable, or other substances injurious to the finished product. Water shall be tested in accordance with and shall meet the suggested requirements of AASHTO T-26. Water known to be of potable quality may be used without test.

309.3 COMPOSITION:

309.3.1 Lime Stabilization Mix Design: Before commencing lime treatment work, the Contractor shall submit for approval by the Engineer, a proposed mix design. The proposed mix design shall be prepared by a testing laboratory under the direction and control of a registered professional engineer. The mix design shall be determined using the soils or subgrade material to be stabilized and lime from the proposed supplier, and shall determine the following:

For soil stabilization applications, the mix design shall report and comply with the following requirements:

Untreated Soil:
(a) Sulfates: Tested per ARIZ 733, AASHTO T-290, or ASTM C1580.
(b) Moisture-Density Relationship (Proctor): Tested per ASTM D698A.
(c) Plasticity Index: Test method AASHTO T-146 Method A, AASHTO T-89 Method A, and T-90.
(d) Sieve Analysis and Minus No. 200 Wash: Test methods ASTM C136 and ASTM D1140.

Revised 2014

Lime Treated Soil:
(a) pH: Lime saturation content per ASTM C977 APPENDIX or ASTM D6276.
(b) Plasticity Index: Less than 3, per AASHTO T-146 Method A, AASHTO T-89 Method A, and T-90.
(c) Swell Potential: Maximum expansive potential of 1.0 per ARIZ 249 using passing No. 4 sieve material. The maximum expansive potential shall be determined on a sample compacted to approximately 95 percent of the ASTM D698A maximum dry density at approximately 2% below optimum moisture content. The sample should be confined under a 100 psf surcharge and inundated.
(d) Unconfined Compressive Strength: Minimum 160 psi per ASTM D5102 Procedure A, after five days curing at 100°F, sealed in air-tight condition.
(e) Mellowing time and mellowing moisture content for treated soil sections b and c to be determined by design engineer. Mellowing time and mellowing moisture content for treated soil section d determined by ASTM D5102.
(f) Hydrated Lime Content: The design engineer shall designate the minimum percentage of lime by dry weight of the dry soil to satisfy the criteria for Section 309.3.2 requirements. The percentage of lime specified shall be sufficient to allow for expected variations during the mixing process. A minimum of 5.0% hydrated lime by dry weight of the dry soil is required for all mix designs.

309.3.2 Lime Modification: For soil modification purposes only, the Engineer shall specify the minimum amount of hydrated lime or lime slurry required to meet the desired improved soil properties.

309.4 CONSTRUCTION:

309.4.1 General: It is the primary requirement of this specification to secure a completed subgrade containing a uniform lime mixture free from loose segregated areas, of uniform density and moisture content, well bound for its full depth, and with a smooth surface suitable for placing subsequent courses.

Prior to beginning any lime stabilization or modification, the subgrade shall be constructed and brought to grade and shall be shaped to conform to the typical sections, lines and grades as shown on the plans.

Lime shall be applied at the mix design rate for the depth of subgrade stabilization or modification shown on the plans or requested by the Engineer.

When the design requires treatment to a depth greater than 12 inches, the subgrade soil shall be treated in equal layers. The top layer(s) of soil shall be removed and stockpiled. The lower layer of soil to be treated shall then be treated and allowed to cure in place. After final mixing, the lower layer shall be compacted in maximum 12 inch thick compacted lifts. The stockpiled soil shall then be placed, treated, mixed and compacted in successive maximum 12 inch thick compacted lifts.

309.4.2 Weather Limitation: Lime treated subgrade shall not be constructed if the ambient temperature is below 40° F or when conditions indicate that temperatures may fall below 40° F within 24 hours.

309.4.3 Equipment: Contractor shall provide all equipment necessary to complete the work including grading and scarifying equipment, a spreader of the lime, mixing and pulverizing equipment, sheepsfoot and pneumatic rollers, sprinkling equipment and trucks. Gravity feed or tailgate spreading, defined as not having automatic controls, will not be permitted. The spreader shall demonstrate the ability to maintain a consistent spread rate over variable travel speeds. All equipment used for this work is subject to approval by the Engineer.

309.4.4 Application: Lime shall be spread only on that area where the mixing operation can be completed during the same working day. The lime application rate shall be at the design content to +0.5%, based on weight of dry soil. The Engineer reserves the right to vary the rate of application of lime from the mix design during the progress of construction as necessary to maintain a pH of the lime/soil mixture above 12.0 and the desired characteristics of the treated subgrade.

For all lime applications, the Contractor shall provide the Engineer with daily application quantities.

309.4.4.1 Quicklime Application: Quicklime shall only be applied by approved spreader trucks equipped with operating dust collectors to minimize dust issues while loading. Additionally, dust control measures must be utilized during the spreading and soil mixing of quicklime. Contractor shall exercise safety measures when mixing quicklime with water.

309.4.4.2 Dry Hydrated Lime Application: Hydrated lime shall only be applied by approved spreader trucks equipped with operating dust collectors to minimize dust issues while loading. Additionally, dust control measures must be utilized during the spreading and soil mixing of dry lime.

309.4.4.3 Lime Slurry Application: Lime slurry shall be mixed in a portable mixing unit and spread with trucks equipped with an approved distribution system. Lime slurry shall be applied at a rate that will yield the required lime percentage determined by the mix design.

309.4.5 Mixing: The full depth of the treated subgrade shall be mixed with an approved mixing machine. The use of disc plows or blades are strictly prohibited except in areas specified by the Engineer. To insure a complete chemical reaction of the lime and soil or subgrade, water shall be used as required to maintain moisture content at optimum to +4% above the optimum of the lime treated mix design proctor, prior to beginning compaction. During the interval of time between application and mixing, lime that has been applied, unmixed and exposed to the open air for 10 hours or more will not be accepted. No traffic other than the mixing equipment will be allowed to pass over the spread of lime until after completion of mixing.

After mixing and prior to compaction, clay lumps shall meet the following criteria:

	Percent
Minimum of clay lumps passing 1-1/2 inch sieve	100
Minimum of clay lumps passing No. 4 sieve	60

309.4.6 Compaction: Compaction of the mixture shall begin after final mixing and shall be accomplished in accordance with the design specifications. Areas inaccessible to conventional rolling equipment shall be compacted to the required density by methods approved by the Engineer. Mellowing time and mellowing moisture content shall be specified by the mix design and performed prior to final compaction.

The material shall be aerated or watered as necessary to provide and maintain required moisture content. A composite of treated soil or subgrade materials from a minimum of five (5) random locations, per soil type, within the area to be stabilized shall be used to determine the maximum dry density and optimum moisture content in accordance with ASTM D698. The field density of the compacted mixture shall be at least 95 percent of the maximum dry density of the field sampled proctor. The in-place compacted field density shall be determined in accordance with ASTM D1556, sand cone, or ASTM D6938, nuclear gauge. In the event of disputed results, the nuclear gauge density shall be correlated to the referee sand cone density while the nuclear water content shall be correlated to the referee ASTM D2216 water content. The adjustment for rock larger than the no. 4 sieve shall be performed in accordance with ASTM D4718.

After each section is completed, tests will be made by the Engineer. If the material fails to meet the density requirements and finished requirements, it shall be reworked to meet requirements at no additional cost to the Contracting Agency.

309.4.7 Thickness: The thickness of the lime treated subgrade shall be determined by visual inspection and/or by depth tests taken at intervals so that each test shall represent no more than 1000 square yards per layer. If more than one layer, the method used to remove material to determine the depth of lime treatment may be by shovel and/or pick, coring or other method approved by the Engineer. Phenolphthalein solution shall be used to detect the presence of lime. When the grade deficiency is more than 1 inch, the Contractor shall correct such areas in a manner satisfactory to the Engineer. Contractor shall replace, at no cost to the Contracting Agency, the material where depth tests are taken.

All irregularities, depressions, or weak spots which develop shall be corrected immediately by scarifying the areas affected, adding or removing material as required, and reshaping and recompacting. The surface of the course shall be maintained in a smooth condition, free from undulations and ruts, until other work is placed thereupon or the work is accepted. Compaction and finishing shall be done in such a manner as to produce a smooth dense surface free of compaction planes, cracks, ridges or loose materials.

Throughout this entire operation, the shape of the course shall be maintained by blading, and the surface upon completion, shall be smooth and shall conform with the typical section shown on the plans and to the established lines and grades. Should the material, due to any reason or cause, lose the required stability, density, and finish before the next course is placed or the work is accepted, it shall be recompacted and refinished at no cost to the Agency.

309.4.8 Finishing and Curing: After the final layer or course of lime treated subgrade has been compacted, it shall be brought to the required lines and grades in accordance with the plans. The completed section shall then be finished by rolling with a pneumatic or other suitable roller.

Each layer of lime treated subgrade shall be maintained in a moist condition until the next layer of pavement structure is placed. If required, a fog seal for curing, in compliance with Section 333, shall be furnished and applied to the surface of the final layer of the lime stabilized material as soon as possible after the completion of final rolling and before the temperature falls below 40° F. Curing seal shall be applied at a rate between 0.10 and 0.20 gallons per square yard of surface. The exact rate will be determined by the Engineer.

After curing begins, all traffic, except necessary construction equipment shall be kept off the lime stabilized subgrade for a minimum of 7 days or until the final pavement structure layer(s) are placed. As an alternative, the Contractor may place a loose lift of aggregate base course over the curing subgrade. The aggregate base course should be kept moist during the curing process.

309.4.9 Maintenance: The Contractor shall maintain, at his/her own expense, the entire lime treated subgrade in good condition from the start of work until all the work has been completed, cured and accepted by the Engineer.

309.5 MEASUREMENT:

The quantity of lime slurry treated soils shall be measured by the square yard, measured in place, treated, compacted, to the proper depth, and accepted.

The quantity of curing seal shall be measured by the ton.

309.6 PAYMENT:

The lime treated soils measured as provided above, will be paid for at the contract price per square yard, which price shall be full compensation for the item complete, as herein described and specified.

The Owner or Engineer reserves the option to pay for the lime separately. Should this option be chosen, the lime treated soils measured as provided above will be paid for at the contract price per square yard which shall include full compensation for the item less lime, as herein described and specified. The lime materials will be paid for by the contract price per ton based on hydrated lime. If quicklime in slurry form is used there will be an additional pay factor of 1.3 applied to determine the actual amount of hydrated lime placed.

Payment for curing seal will be by the ton, based on the rate of application as requested by the Engineer.

- End of Section -

310.5 PAYMENT:

Payment for aggregate base course will be made on the basis of the contract unit price per ton unless an alternate basis of payment is provided in the proposal.

- End of Section -

SECTION 311

PLACEMENT AND CONSTRUCTION OF CEMENT TREATED SUBGRADE

311.1 DESCRIPTION:

This item shall consist of a cement treated subgrade composed of a mixture of local soil, Portland cement, and water compacted at optimum moisture content.

311.2 MATERIALS:

Portland cement and water shall comply with Sections 725. The soil for the mixture shall consist of the material in the area to be paved. The material shall not contain more than 5 percent gravel or stone retained on a 3 inches sieve. It shall be demonstrated by laboratory tests that the plasticity and strength characteristics as defined in Section 311.4.5 of the soil will be adequately modified by the specified cement content.

311.3 EQUIPMENT:

An ample number of machines, combination of machines and equipment shall be provided and used to produce the complete soil cement treated layer meeting the requirements for soil pulverization, cement distribution, water application, incorporation of materials, compaction, finishing, and for application of the curing material as provided in these specifications.

Mixing shall be accomplished by means of multiple-pass soil-cement mixer, single-pass soil-cement mixer or central plant mixer.

Water may be applied through the mixer or with the water trucks equipped with pressure sprays. Water trucks providing fine fog-type sprays shall be furnished for finishing and curing. Properly adjusted garden type nozzles on a pressure bar may be used to produce fog spray if approved by the Engineer.

Cement spreader shall be a specially constructed device to distribute bulk cement at the specified rate. The spreader shall have the ability to maintain a consistent spread rate over variable travel speeds.

311.4 CONSTRUCTION METHODS:

Prior to construction, the contractor shall remove all deleterious material, organic material, and particles retained on the 3 inch sieve from the area to be treated. The soil shall be brought to a compacted condition, true to line and grade as directed by the Engineer or as shown on the plans. The compacted soil and surface shall be approved by the Engineer prior to proceeding with mixing.

The material shall be scarified, pulverized, mixed with water and cement, compacted, finished and cured in lengths permitting the full roadway width to be complete in not more than 4 hours from the time that cement is exposed to water. Such lengths will generally be not less than 600 feet or the length of one City block and preferably more. Where a gutter section exists the material shall be pulled back from the gutter face for the full depth of the course before processing.

311.4.1 Pulverizing: Prior to application of cement, soil to be processed shall be scarified to depth of base. The material shall be damp at time of scarifying to reduce the dust generation and to aid in pulverization. Soil shall be pulverized until not less than 80 percent, exclusive of gravel or stone, will pass a No. 4 sieve.

311.4.2 Application of Cement: The quantity of cement shall be by weight as a percentage of the dry weight of the soil as determined by the laboratory and/or as directed by the Engineer and shall be applied uniformly on the soil in a manner satisfactory to the Engineer. The allowable deviation in uniformity shall not exceed 10 percent. The entire operation of spreading and mixing shall be conducted in such a manner as will result in a uniform soil cement and water mixture for the full design width and depth.

The percentage of moisture in the soil, at the time of cement application, shall not exceed the quantity that will permit a uniform and intimate mixture of the soil and cement during mixing operations, and it shall not exceed the specified optimum moisture content for the soil cement mixture.

321.7 TRANSPORTATION:

Petroleum distillates or other substances that will have a detrimental effect on the asphalt concrete shall not be used as a release agent.

The beds of all transportation units shall be clean and smooth to allow the free flow of material into the paving machine's hopper.

Tarpaulins shall be furnished on all trucks and used when weather condition warrant, or if directed by the Engineer.

321.8 PLACEMENT:

321.8.1 Placing: All courses of asphalt concrete shall be placed and finished by means of a self-propelled paving machine equipped with an automatically actuated control system, except under certain conditions or at locations where the Engineer deems the use of a self-propelled paving machine impracticable.

The control system shall control the elevation of the screed at each end by controlling the elevation of one end directly and the other end indirectly either through controlling the transverse slope or alternatively when directed, by controlling the elevation of each end independently.

The control system shall be capable of working with one of the following devices:

(a) Ski or non-contact device of not less than 30 feet in length, supported throughout its entire length
(b) Taut stringline or wire set to grade
(c) Short ski or sonar sensing units from curb control
(d) Joint matching shoe

Failure of the control system to function properly shall be cause for the suspension of asphalt concrete production. In order to achieve a continuous operation, the speed of the paving machine shall be coordinated with the hot mix plant and transport units.

If the asphalt concrete is dumped from the hauling vehicles directly into the paving machine, care shall be taken to avoid jarring the machine or moving it out of alignment. No vertical load shall be exerted on the paving machine by the truck.

If asphalt concrete is dumped upon the surface being paved and subsequently loaded in the paving machine, the loading equipment shall be self-supporting and shall not exert any vertical load on the paving machine. Substantially all of the asphalt concrete shall be picked up and loaded into the paving machine.

Self-propelled paving machines shall spread the mixture without segregation or tearing, true to line, grade and crown indicated on the Project plans. Pavers shall be equipped with hoppers and augers that will distribute the mixture uniformly in front of an adjustable floating screed. The raising of the hopper wings must be minimized and the paving machine will not be operated when in an empty condition.

Screeds shall include any strike-off device operated by tamping or vibrating action which is effective, without tearing, shoving or gouging the mixture and which produces a course with a uniform texture and density for the full width being paved. Screeds shall be adjustable as to height and crown and shall be equipped with a controlled heating device for use when required. In the case of the screed, auger extensions and vibrators shall be installed wherever the screed is extended more than one (1) foot beyond the end of the base auger or auger extension. However, when placing material against an extremely uneven curb or edge over a short distance, the Engineer may waive the auger extensions and vibrators.

At any place not accessible to the roller, the mixture shall be thoroughly compacted with tampers to provide a uniform and smooth layer over the entire area compacted in this manner.

321.8.2 Joints: Transverse joints, before a surface course is placed in contact with a cold transverse construction joint, the cold existing asphalt concrete shall be trimmed to a vertical face for its full depth and exposing a fresh face. After placement and finishing the new asphalt concrete, both sides of the joint shall be dense and the joint shall be smooth and tight. The surface in the area of the joint shall not deviate more than 1/4 inch from a 12-foot straightedge, when tested with the straightedge placed across the joint, parallel to the centerline.

Longitudinal Joints of each course shall be staggered a minimum of 6 inches with relation to the longitudinal joint of the immediate underlying course cold transverse construction joint, the cold existing asphalt concrete shall be trimmed to a vertical face for its full depth and exposing a fresh face. The fresh face shall be tacked prior to placement of the adjacent course. After placement and finishing the new asphalt concrete, both sides of the joint shall be dense and the joint shall be smooth and tight. The surface in the area of the joint shall not deviate more than ¼ inch from a 12-foot straightedge, when tested with the straightedge placed across the joint, parallel to the centerline. The joint will be tack coated if required by the Engineer.

321.8.3 Asphalt Leveling Course: A leveling course shall be used when specified, or as directed in writing by the Engineer, to bring existing pavement to a uniform grade prior to placing an overlay or other course. If a leveling course is being applied on an Asphalt surface, a tack coat shall be applied. The compaction requirements contained in Section 321.10 do not apply to leveling courses.

321.8.4 Compaction; Asphalt Base Course and Surface Course: It is the contractor's responsibility to perform any desired Quality Control monitoring and/or testing during compaction operations to achieve the required compaction. The temperature of the asphalt concrete immediately behind the laydown machine shall meet the minimum requirements of Table 321-2. A probe type electronic thermometer with a current calibration sticker attached will be used to measure the temperature of the asphalt concrete mixture. When measuring the temperature of the mat, the probe shall be inserted at mid-depth and as horizontal as possible to the mat.

TABLE 321-2

MINIMUM ASPHALT CONCRETE PLACEMENT TEMPERATURE

Base [(1)] Temp (°F)	Mat Thickness (inches)					
	1/2	3/4	1	1 1/2	2	3 and greater
40 – 50	---	---	310	300	285	275
50 – 60	---	310	300	295	280	270
60 – 70	310	300	290	285	275	265
70 – 80	300	290	285	280	270	265
80 – 90	290	280	270	270	265	260
+90	280	275	265	265	260	255

(1) Base on which mix is to be placed

Asphalt compaction equipment shall be of sufficient size and weight to accomplish the required compaction. All compaction equipment shall be operated and maintained in accordance with the manufacturer's recommendations and the project requirements. During the rolling operation, the speed of the roller shall not exceed 3 miles per hour, unless otherwise approved by the Engineer.

Pneumatic tired compactors shall be equipped with skirt-type devices mounted around the tires so that the temperature of the tires will be maintained during the compaction process.

The Engineer will determine the acceptability of the pavement compaction in accordance with Section 321.10.

321.8.5 Smoothness: The completed surfacing shall be thoroughly compacted, smooth and true to grade and cross-section and free from ruts, humps, depressions or irregularities. An acceptable surface shall not vary more than one-fourth (¼) inch from the lower edge of a 12-foot straightedge when the straightedge is placed parallel to the centerline of the roadway.

321.8.6 Asphalt Concrete Overlay: Asphalt concrete overlay consists of the placing and compacting plant mix asphalt concrete over existing pavement. The mix design and thickness of the overlay shall be as shown on the plans or as specified in the special provisions.

Except when the existing asphalt surface is to be preheated and remixed, pavement surfaces shall be prepared as follows:

(a) Areas designated for pavement repair by the contract documents (which may include severely raveled areas, severely cracked areas, over-asphalted areas, and other defects) shall be cut out and replaced. Pavement repairs shall be completed and approved before placing asphalt concrete overlay.

(b) Before placing asphalt concrete overlay, milling shall be done as shown on the plans or specified in the special provisions and shall be in accordance with Section 317.

(c) After pavement repairs and milling have been completed the entire surface shall be cleaned with a power broom.

(d) After surfaces have been prepared to the satisfaction of the Engineer, they shall receive a tack coat per Section 321.4. Traffic will not be permitted to travel over surfaces which have received a tack coat, except when tack coat is applied to milled surfaces in compliance with Section 317.2 for dust control purposes. When the overlay is to extend onto a concrete gutter, the gutter shall be thoroughly cleaned of loose dust and cement particles and shall be tack coated.

Asphalt concrete overlay shall be placed as specified in Section 321.8.1 and compacted as specified in Section 321.8.4. The surface smoothness shall meet the tolerances specified in Section 321.8.5.

Frames and covers of manholes, survey monuments, valve boxes, clean-outs and other existing structures shall be adjusted in accordance with Section 345 to set flush with the finished surface of the new pavement. During adjustment if pavement or base materials are removed or disturbed, they shall be replaced with approved materials installed in a manner acceptable to the Engineer.

On roads without curb and gutter, the existing unpaved shoulder elevation shall be adjusted by the Contractor to match the elevation at the edge of the new overlay and slope away from the new pavement surface at a rate that the existing quantity of shoulder material will allow. Shoulder material shall be compacted to a minimum of 95% of maximum density, determined in accordance with Section 301.3. Shoulder adjustment to match the new pavement surface elevation shall not be measured. The cost of shoulder adjustment shall be included in the price paid for the asphalt concrete overlay or other related pay items. When the Engineer determines an insufficient amount of material is available for shoulder adjustment, the Engineer may require the Contractor to provide additional material. Acceptable material for shoulders includes the existing shoulder material, millings, untreated base materials, or a granular material approved by the Engineer. Engineer requested imported material for shoulder adjustment is not included in the price paid for the asphalt concrete overlay.

321.8.7 Pavement Fabric Interlayer: Pavement fabric interlayer shall be used only when specified on the plans or in the specifications.

Pavement fabric interlayer shall be in accordance with Table 796-1 and be the class designated on the plans or in the specifications.

Asphalt binder coat used to bond the fabric to the pavement shall be paving asphalt PG 70-10 asphalt cement conforming to the requirements of Section 711. The application and distributing equipment for the asphalt binder shall conform to the requirements of Section 330. The asphalt binder coat shall be uniformly spray applied to the prepared pavement surface at the rate of 0.20 gallons per square yard for Class B fabric or at the rate of 0.25 gallons per square yard for Class A fabric. Some underlying surfaces may require a higher or lower application rate. A test strip may be necessary to determine the proper application rate. The width of liquid asphalt cement application shall be the fabric width, plus six inches.

Neither the asphalt binder coat or fabric interlayer shall be placed when weather conditions, in the opinion of the Engineer, are not suitable. The asphalt binder and fabric interlayer shall only be placed when the pavement is dry, the ambient air temperature is 50 degrees F and rising, and pavement temperature is 40 degrees F and rising.

Equipment for placing the fabric shall be mechanized and capable of handling full rolls of fabric. The equipment shall be able to lay the fabric smoothly to maximize pavement contact and remove air bubbles. Stiff bristle brooms shall be used to smooth the fabric. The equipment used to place the fabric shall be in good working order and is subject to approval by the Engineer.

Pavement fabric interlayer shall not be placed if the in-place binder is hotter than 325 degrees F or has cooled to 180 degrees F or below (as determined by non-contact thermometer).

Pavement fabric interlayer shall be placed onto the asphaltic binder with the heat bonded side up with a minimum amount of wrinkling or folding. Remaining wrinkles or folds 1-inch and larger shall be removed or slit and shingle-lapped in the direction of paving. Burning or torching of wrinkles is not allowed. Fabric shall overlap three to six inches to insure full closure of the joint. Transverse joints shall be shingle-lapped in the direction of paving to prevent edge pickup by the paver. A second application of hand-placed asphalt binder may be required at laps and repairs as determined by the Engineer to ensure proper binding of the narrow double fabric layer.

All areas where fabric has been placed shall be paved with asphaltic concrete during the same workshift. Placement of the asphaltic concrete shall closely follow fabric lay down. The temperature of the asphaltic concrete immediately behind the laydown machine shall not exceed 325 degrees F. In the event that the asphalt binder coat bleeds through the fabric causing construction problems before the overlay is placed, the affected areas shall be sanded with a sand blotter in compliance with Section 333. Excess sand shall be removed before beginning the paving operation. In the event of rainfall prior to the placement of the asphaltic concrete, the fabric shall be allowed to dry before the asphalt concrete is placed.

Turning of the paving machine or of other vehicles on the fabric shall be gradual and kept to a minimum to avoid damage to the fabric. Should equipment tires stick to the fabric during pavement operations, small quantities of paving asphalt concrete shall be broadcast on the fabric to prevent pick-up. Decrease of binder rate in order to minimize pick-up on tires is not allowed.

321.8.8 Thickened Edge: When the depth of the thickened edge extends four inches or more below the bottom of the asphalt pavement, the portion of the thickened edge extending below the asphalt pavement shall be placed and compacted prior to placement of the asphalt pavement. Placement of tack coat on the surface of the compacted thickened edge asphalt may be omitted when additional asphalt pavement is placed on the same day and the Engineer agrees that the surface of the thickened edge asphalt has remained clean.

When the depth of the thickened edge extends less than four inches below the bottom of the asphalt pavement, the portion below the asphalt pavement may be placed and compacted with the asphalt pavement in a single operation.

321.8.9 Safety Edge: The finished safety edge slope shall be planar forming a 30° ± 5° angle with the adjacent roadway surface and extend a minimum of five inches (5”) below the roadway pavement’s finished surface.

The safety edge shall be constructed with the top or final paving lift of a new pavement or overlay using a device that is mounted to or is a part of the screed portion of the laydown machine. The safety edge device shall be capable of constraining the asphalt concrete material to increase density of the extruded profile by reducing the volume. A conventional single strike-off plate is not acceptable. Compaction obtained from the extruded safety edge shall be acceptable when the extruded shape conforms to the specified shape.

During laydown operations if the extruded safety edge does not conform to the specified shape, the Contractor shall take immediate actions to correct the deficiency and to repair all non-compliant sections of safety edge. The Contractor shall stop paving operations until corrections to the laydown operation have been made and resumption of paving is approved by the Engineer or his designated representative.

321.9 QUALITY CONTROL:

It is the contractor’s responsibility to perform Quality Control monitoring and/or testing during asphalt concrete production to achieve the required compaction and to perform Quality Control monitoring and/or testing during asphalt concrete production to achieve the required mix properties. The Engineer may obtain samples of any portion of any material at any point of the operations for his own use. Also, the Engineer may order the use of any drying, proportioning and mixing equipment or the handling of any material discontinued which, in his/her opinion, fails to produce a satisfactory mixture.

The asphalt concrete produced shall conform to the requirements of the production tolerances established in section 321.10. When the asphalt concrete does not conform to the production tolerances, it shall be reported to the Engineer, and corrective quality control measures shall be implemented, or production shall cease immediately at no additional cost to the contracting Agency or Engineer.

321.10 ACCEPTANCE:

321.10.1 Acceptance Criteria: Unless otherwise specified, asphalt concrete will be divided into lots for the purpose of acceptance. A lot shall be considered to be one day’s production. When the quantity of asphalt concrete placed in a day exceeds 500 tons but is less than 2000 tons, the lot shall be divided into 500 ton sublots or fraction thereof. Where the quantity of asphalt concrete placed in a day exceeds 2000 tons, the day’s production will be divided into four (4) approximately equal sublots. A minimum of one sample will be obtained from each lot. Tests used to determine acceptance will be performed by the Engineer or a laboratory employed by the Engineer. In either case the laboratory shall be accredited by the AASHTO Accreditation Program (AAP), for the tests being performed. The acceptance laboratory will take representative samples of the asphalt

concrete from each sublot to allow for gradation, binder content, air voids, pavement thickness and compaction of base and surface course. Each sublot will be accepted based upon the test data from the sample(s) from that sublot. All acceptance samples shall be taken using random locations or times designated by the Engineer in accordance with ASTM D3665.

321.10.2 Gradation, Binder Content and Air Voids: The acceptance laboratory will take a sample of the asphalt concrete in accordance with the requirements of Section 2 or 4 of Arizona Test Methods 104 or AASHTO T-168 from each sublot. The minimum weight of the sample shall be 45 pounds. Asphalt binder content and gradation shall be determined in accordance with AASHTO T-308 using the ignition furnace for each sublot. The acceptance laboratory is responsible for obtaining the necessary materials and performing an ignition furnace calibration as outlined in AASHTO T-308 for each asphalt concrete mixture utilized on the project. The correction factor used for each test shall be clearly indicated on the report. The bulk density for Marshall Mix designs shall be tested in accordance with AASHTO T-245. The bulk density for Gyratory mix designs shall be determined in accordance with AASHTO T-312. The maximum theoretical density shall be determined in accordance with the requirements of AASHTO T-209 including fan drying per AASHTO T209 Section 15. Effective voids of the laboratory compacted specimens will be determined at a minimum of once per lot in accordance with the requirements of AASHTO T-269. Should the testing for effective air voids not meet the "Full Payment" or "No Corrective Action" requirements of Table 321-5, additional testing for laboratory air voids on the remaining sublots will be performed as necessary to determine the extent of the deficiency. Acceptance testing results will be furnished to the contractor and the supplier within five working days of receipt of samples by the acceptance laboratory.

During production, the allowable deviations from the mix design gradation targets are listed in the tables below. The allowable production tolerances may fall outside of the mix design gradation bands.

TABLE 321-3A
GRADATION ACCEPTANCE LIMITS FOR MARSHALL MIXES

Sieve Size	3/8 inch Mix	1/2 inch Mix	3/4 inch Mix	Base Mix
1 inch	---	---	---	±7%
3/4 inch	---	---	±7%	±6%
1/2 inch	---	±7%	---	---
3/8 inch	±7%	±6%	±6%	±6%
No. 8	±6%	±6%	±6%	±6%
No. 40	±4%	±4%	±4%	±4%
No. 200	±2%	±2%	±2%	±2%

TABLE 321-3B
GRADATION ACCEPTANCE LIMITS FOR GYRATORY MIXES

Sieve Size	3/8 inch Mix	1/2 inch Mix	3/4 inch Mix
3/4 inch	---	---	±7%
1/2 inch	---	±7%	±6%
3/8 inch	±7%	±6%	---
No. 8	±6%	±6%	±6%
No. 40	±4%	±4%	±4%
No. 200	±2%	±2%	±2%

If the results from a single acceptance sample fall outside of the acceptance limits in Table 321-3A or 321-3B as applicable, a second sample shall be taken and if the second acceptance sample is also outside of the acceptance limits the Contractor shall cease production of asphalt concrete. Production shall not begin again until calibration test results verify that adjustments made to materials or proportions yield a gradation that falls within acceptance limits in Table 321-3A or 321-3B as applicable.

If the asphalt binder content is within ± 0.40% of the mix design target value, the asphalt concrete will be paid for at the contract unit price. If the asphalt binder content deviates by more than ± 0.40% from the mix design target value, the deficient area will be evaluated within the sublot by coring at maximum intervals of 100 feet from the deficient sample. The asphalt content of the original deficient sample will be averaged with the asphalt binder content of the cores taken for re-evaluation to determine compliance with the acceptance requirements. If the resulting average of the asphalt binder content deviates by more than

± 0.40% from the mix design target value, then Table 321-4 shall apply to the sublot. Additional cores may be required to define the limits of the deficient area, and shall not be used for re-evaluating acceptance.

TABLE 321-4 ASPHALT BINDER CONTENT ACCEPTANCE AND PENALTIES		
Deviation from that permitted	When the contracting agency is the owner: Payment Reduction ($ per ton of asphalt concrete)	When the contracting agency is not the owner (i.e. permits): Corrective Action
Over 0.2% above that permitted	Removal* or EA	Removal* or EA
Over 0.1% to 0.2% above that permitted	$6.00	EA
Over 0.0% to0.1% above that permitted	$2.00	EA
Within permitted range	Full Payment	No Corrective Action
Over 0.0% to0.1% below that permitted	$2.00	EA
Over 0.1% to 0.2% below that permitted	$6.00	EA
Over 0.2% below that permitted	Removal* or EA	Removal* or EA

NOTES: *The Contractor shall remove and replace the entire sublot that is deficient.
EA = Engineering Analysis per Section 321.10.6

If the laboratory air voids fall within a range of 2.8% to 6.2%, the asphalt concrete will be paid for at the contract unit price. If the laboratory air voids are outside of this range, the deficient area will be evaluated within the sublot by coring at maximum intervals of 100 feet from the deficient sample. The laboratory air voids of the original deficient sample will be averaged with the laboratory air voids obtained from each of the cores taken for re-evaluation to determine compliance with the acceptance requirements. If the resulting average of the laboratory air voids is outside the indicated range, then Table 321-5 shall apply to the sublot. Additional cores may be required to define the limits of the deficient area, and shall not be used for re-evaluating acceptance.

TABLE 321-5		
LABORATORY VOIDS ACCEPTANCE AND PENALTIES		
Laboratory Air Voids (Measured at N_{des} or 75 blows as applicable)	When the contracting agency is the owner: Payment Reduction ($ per ton of asphalt concrete)	When the contracting agency is not the owner (i.e. permits): Corrective Action
Less than 1.5%	Removal* or EA	Removal* or EA
1.5-2.0%	$5.00	EA
2.1-2.7%	$2.00	EA
2.8-6.2%	Full Payment	No Corrective Action
6.3-6.9%	$2.00	EA
7.0-8.0%	$5.00	EA
Greater than 8.0%	Removal* or EA	Removal* or EA

NOTES: *The Contractor shall remove and replace the entire sublot that is deficient
EA = Engineering Analysis per Section 321.10.6
Removal for In-place Air Voids Greater than 11.0% is not eligible for Section 321.10.6.

If an agency or Engineer is purchasing asphalt concrete directly from a commercial material supplier, the agency or Engineer will use Section 321.10, and specifically Tables 321-3A or 321-3B as applicable, 321-4 and 321-5 from Section 321.10, when determining the acceptance of the asphalt concrete with the material supplier.

321.10.3 Surface Testing: If directed by the Engineer surface drainage test shall be performed. The completed surfacing shall be thoroughly compacted, smooth and true to grade and cross-section and free from ruts, humps, depressions or irregularities. An acceptable surface shall not vary more than 1/4 inch from the lower edge of a 12-foot straightedge when the straightedge is placed parallel to the centerline of the roadway. The straightedge shall be furnished by the contractor and shall be acceptable to the Engineer.

All streets shall be water tested for drainage in the presence of the Engineer or designated representative before final acceptance. Any areas not draining properly shall be corrected to the Engineer's satisfaction at the Contractor's expense. Water for this testing shall be provided and paid for by the Contractor.

When deviations in excess of the above tolerance are found, humps or depressions shall be corrected to meet the specified tolerance, or shall be cut out along neat straight lines and replaced with fresh hot mixture and thoroughly compacted to conform with and bond to the surrounding area. Materials and work necessary to correct such deviations shall be at no additional cost to the Contracting Agency.

321.10.4 Asphalt Pavement Thickness: Asphalt Pavement thickness will be determined from cores secured from each sublot for this purpose. Such cores will be taken and measured by the Asphalt Concrete Coring Method. This method can be found at in Section 321.14. Each core location will be patched by the party responsible for the testing.

If the pavement thickness is deficient from the target thickness by 0.25 inches or less, it will be paid for at the contract unit price. If the pavement thickness deficiency is greater than 0.25 inches and the contracting agency is not the owner (i.e. permits) the following steps will apply:

(1) If the thickness deficiency of the pavement exceeds 0.25 inch, the limits of the deficient area will be evaluated by coring at maximum intervals of 100 feet from the deficient core. The thicknesses of the original deficient core will be averaged with the thicknesses of the cores taken from 100 feet on each side of it to determine compliance with the acceptance requirements. If the resulting average thickness deficiency is greater than 0.25 inch, additional cores may be required to define the limits of the deficient area, and shall not be used for re-evaluating acceptance.

(2) If the pavement thickness from step one above deviates from the target thickness by more than 0.25 inch but not more than 0.50 inch, corrective action will be required. This corrective action will consist of application of a Type II slurry seal coat in accordance to Section 715. The Contractor may present an engineering analysis outlining other proposed remedial measures for the consideration of the Engineer. The Engineer will review the engineering analysis and decide within 30 working days whether to accept the proposed remedial measures.

(3) If the pavement thickness from step one above deviates from the target thickness by more than 0.50 inch, corrective action will be required. The deficient area will be overlaid with no less than 1 inch thick lift, for the full width of the pavement to meet or exceed the designed thickness, with the appropriate end and edge milling, with a mixture approved by the Engineer. The Contractor may present an engineering analysis outlining other proposed remedial measures for the Engineer's consideration. The Engineer will review the engineering analysis and decide within 10 working days whether to accept the proposed remedial measures. If the Engineer chooses to reject the engineering analysis, the indicated overlay will be constructed by the Contractor at no additional cost to the Owner.

If the pavement thickness deficiency is greater than 0.25 inches and the contracting agency is the owner, Table 321-6 will apply.

TABLE 321-6 ASPHALT PAVEMENT THICKNESS PAYMENT REDUCTION For Thickness Deficiency of More Than 0.25 inches and less than 0.50 inches	
Specified Pavement Thickness	**Reduction in Payment or Corrective Action**
Less than 1.5 inches	50%
1.50 inches to 1.99 inches	33%
2.00 inches to 2.49 inches	25%
2.50 inches to 2.99 inches	20%
3.00 inches and over	17%

321.10.5 Density:

321.10.5.1 Pavement 1-1/2 Inches or Less in Nominal Thickness:

Compaction shall consist of a "Rolling Method Procedure" using an established sequence of coverage with specified types of compactors. A pass shall be defined as one movement of a compactor in either direction. Coverage shall be the number of passes as are necessary to cover the entire width being paved.

The rolling sequence, the type of compactor to be used, and the number of coverages required shall be as shown in Table 321-7.

TABLE 321-7 ROLLING SEQUENCE FOR LIFT THICKNESS 1½" OR LESS				
Rolling Sequence	**Type of Compactor**		**No. of Coverages**	
	Option No. 1	**Option No. 2**	**Option No.1**	**Option No. 2**
Initial	Static Steel	Vibrating Steel	1	1
Intermediate	Pneumatic Tired	Vibrating Steel	4	2- 4*
Finish	Static Steel	Static Steel	1-3	1-3
* Based on the roller pattern which exhibits the best performance.				

The Contractor shall select the option for compaction and, when pneumatic-tired compactors are used will designate the tire pressure. Steel wheel compactors shall not be used in the vibratory mode for courses of one inch or less in thickness nor when the temperature of the asphaltic concrete falls below 180 degree F. Initial and intermediate compaction shall be accomplished before the temperature of the asphaltic concrete falls below 200 degree F.

Compaction will be deemed to be acceptable on the condition that the asphaltic concrete is compacted using the type of compactors specified, ballasted and operated as specified, and with the number of coverages of the compactors as specified.

321.10.5.2 Pavement Greater than 1-1/2 Inches in Nominal Thickness:

Achieving the required compaction is the responsibility of the contractor. The number and types of rollers is the contractor's responsibility and shall be sufficient to meet these requirements.

In-place air voids shall be determined in accordance with AASHTO T-269 utilizing cores taken from the finished pavement. The maximum theoretical density used in the determination of in-place air voids will be the average value from the acceptance samples determined for the Lot as outlined in 321.10.1.

The Engineer will designate one random test location for each sublot and the acceptance laboratory will obtain one core from that location. Regardless of sublot quantities or boundaries, a minimum of one core will be obtained per residential street and a minimum of one core per travel lane for collector and arterial streets. The outside one foot of each pass of the pavement course or any unconfined edge will be excluded from testing. The Engineer may exclude areas from the compaction lot that are not accessible by normal compaction equipment.

The Contractor will provide the traffic control to facilitate any coring operations necessary for compaction acceptance.

Cores will be taken per the Asphalt Concrete Coring Method. This method can be found in Section 321.14. Acceptance testing results will be furnished to the contractor within five working days of receipt of samples by the acceptance laboratory.

If the pavement density has in-place voids of 8.0% or less, the asphalt concrete will be paid for at the contract unit price. If the pavement density has in-place voids greater than 8.0%, the deficient area will be evaluated within the sublot by coring at maximum intervals of 100 feet from the deficient core(s). If both cores in a sublot are deficient, 3 to 4 additional cores may be necessary to re-evaluate acceptance. The in-place voids of all the original core(s), whether deficient or acceptable, will be averaged with the in-place voids of the cores taken for re-evaluation to determine compliance with the acceptance requirements. If the average of the in-place voids is greater than 8.0% then Table 321-8 shall apply to the sublot. Additional cores may be required to define the limits of the deficient area, and shall not be used for re-evaluating acceptance.

TABLE 321-8

PAVEMENT DENSITY PENALTIES

Limits of In-place Air Voids for design lift thicknesses 1.5 inches and greater	When the contracting agency is the owner: Payment Reduction ($ per ton of asphalt concrete)	When the contracting agency is not the owner (i.e. permits): Corrective Action
Below 3.0%	Removal* or EA	Removal* or EA
3.0% to below 4.0%	$10.00	EA and Type II Surry Seal
4.0% to 8.0%	Full Payment	No Corrective Action
Greater than 8.0% to less than 9.0%	$6.00	EA
9.0% to 10.0%	$10.00	EA and Type II Surry Seal
Greater than 10.0%	Removal* or EA	Removal* or EA

NOTES: *The Contractor shall remove and replace the entire sublot that is deficient.
EA = Engineering Analysis per Section 321.10.6
Removal for In-place Air Voids greater than 11.0% is not eligible for Section 321.10.6.

Revised 2014

321.10.6 Engineering Analysis (EA): Within 10 working days after receiving notice that a lot or sublot of asphalt concrete is deficient and is found to fall within the "Removal or EA" band per Table(s) 321-4, 321-5, and/or 321-8 the contractor may submit a written proposal (Engineering Analysis) to accept the material in place at the applicable penalties along with possible remediation(s) listed in the "Removal or EA" category. Engineering Analysis can also be proposed for non-removal categories of "Corrective actions" when the contracting agency is not the owner (i.e. permits).

The Engineering Analysis shall contain an analysis of the anticipated performance of the asphalt concrete if left in place. The Engineering Analysis shall also detail the effect of any proposed corrective action to the material(s) in place as it relates to the in-place material's performance. The Engineering Analysis shall be performed by a professional engineer experienced in asphalt concrete testing and mix designs. If the lot or sublot is submitted for referee testing by the contractor, the ten working days allowed to prepare an engineering will begin upon notification of referee test results.

When an Engineering Analysis recommends that a specific lot or sublot should not be removed, the Engineering Analysis will recommend that the following penalties (Table 321-9) be paid when the contracting agency is the owner, for the specific criteria being reviewed by the EA.

TABLE 321-9		
ENGINEERING ANALYSIS PENALTIES for REMOVAL* LOTS/SUBLOTS LEFT IN-PLACE		
Acceptance Criteria	**Acceptance Limits**	**Penalty When Contracting Agency is the Owner ($/Ton)**
Asphalt Binder Content	Over 0.2% points from that Permitted	$9.00
Laboratory Air Voids (Measured at N_{des} or 75 blows as applicable)	Less than 1.5% or Greater Than 8.0%	$3.75
Limits of In-place Air Voids	10.1% to 11.0%	$9.00

Within 15 working days, the Engineer will determine whether or not to accept the contractor's proposed Engineering Analysis.

321.11 REFEREE:

In the event the contractor elects to question the acceptance test results for either asphalt binder content, laboratory air voids, density or a combination thereof for a sublot, the Contractor may make a written request for additional testing of that sublot. Any request for referee testing must describe the contractor's reasons for questioning the validity of the original acceptance results and must clearly describe which set of acceptance tests are in question. The Contractor will engage an independent laboratory (at the Contractors own expense) who is accredited by AAP in all of the acceptance test methods. The independent laboratory shall be acceptable to the Engineer and shall perform a new set of acceptance tests as required by Section 321.10 representing the area or set of tests in question. The results of these determinations will be binding on both the contractor and the agency.

These tests may include asphalt binder content, aggregate gradation, Marshall or Gyratory unit weight, maximum theoretical unit weight, laboratory air voids and in-place air voids (compaction). Samples for referee testing shall come from representative samples obtained from the completed pavement, as directed by the Engineer.

The number of samples taken will be the same as specified in Section 321.10. The independent laboratory shall compile the test results and transmit them to both the Engineer and the contractor. The independent laboratory shall include a report signed by an Engineer registered in the State of Arizona, who is experienced in asphalt concrete testing and mix design development. The signed report shall give an opinion that the material evaluated does or does not comply with project specifications, shall clearly describe any deficiencies, and the results will be binding between all parties.

321.12 MEASUREMENT:

Asphalt concrete pavement will be measured by the ton, or by the square yard, for the mixture actually used as allowed above, which shall include the required quantities of mineral aggregates, asphalt binder, and mineral admixture. Measurement shall

include any tonnage used to construct intersections, roadways, streets, or other miscellaneous surfaces indicated on the plans or as directed by the Engineer.

321.13 PAYMENT:

The asphalt concrete measured as provided above will be paid for at the contract price per ton or square yard, as adjusted per Section 321.10, which price shall be full compensation for the item complete, as herein described and specified.

Payment for tack coat will be by the ton diluted, based on the rate of application, as directed by the Engineer.

No payment will be made for any overrun in quantity of asphalt concrete in excess of 10 percent based on actual field measurement of area covered, design thickness, and the mix design unit weight. The calculations and payment for overrun will be by individual pay item. To compensate or adjust for a thickness deficiency in an underlying asphalt concrete course, the Engineer may authorize a quantity increase in excess of 10 percent for a subsequent asphalt concrete course. In such cases, the quantity in excess of 10 percent will be paid for at the lowest unit price.

Agency required repairs of existing pavement prior to roadway overlay operations will be paid for as a separate pay item.

Except as otherwise specified, no separate payment will be made for work necessary to construct miscellaneous items or surfaces of asphalt concrete.

321.14 ASPHALT CORE METHOD: Core Drilling of Hot Mix Asphalt (HMA) for Specimens of 4" or 6" diameter

321.14.1 Scope: This method is to establish a consistent method of the use of a diamond bit core to recover specimens of 4 or 6 inch diameter for laboratory analysis and testing. The method will require the use of: water, ice (bagged or other suitable type), dry ice, and a water-soap solution to be utilized when coring asphalt rubber concrete. Individuals doing the specimen recovery should be observing all safety regulations from the equipment manufacturer as well as the required job site safety requirements for actions, and required personal protective equipment.

321.14.2 Core Drilling Device: The core drilling device will be powered by an electrical motor, or by an acceptable gasoline engine. Either device used shall be capable of applying enough effective rotational velocity to secure a drilled specimen. The specimen shall be cored perpendicularly to the surface of pavement, and that the sides of the core are cut in a manner to minimize sample distortion or damage. The machinery utilized for the procedure shall be on a mounted base, have a geared column and carriage that will permit the application of variable pressure to the core head and carriage throughout the entire drilling operation. The carriage and column apparatus shall be securely attached to the base of the apparatus; and the base will be secured with a mechanical fastener or held in place by the body weight of the operator. The core drilling apparatus shall be equipped with a water spindle to allow water to be introduced inside of the drill stem while operating. The cutting edge of the core drill bit shall be of hardened steel or other suitable material with embedded diamond chips in the cutting surface. The core barrel shall be of sufficient diameter to secure a specimen that is a minimum of four or six inches or whichever is prescribed for necessary testing. The core barrel shall not be missing more than one of the teeth used for cutting; if so it shall be discarded and another barrel shall be used. The core barrel shall also be a minimum of two inches longer than the anticipated depth of pavement in accordance with project paving plans.

321.14.3 Accessory Equipment: A sufficient supply of ice and dry ice shall be provided to sufficiently cool the pavement prior to securing the samples from the designated areas in the pavement. The ice should also be used to adjust the temperature of the water used to cool the core bit. A water supply (usually a plastic 35 – 55 gal drum) with sufficient hose to introduce the water into and through the spindle of the coring device by gravity feed. The drum should be white or light in color to minimize excessive thermal heating of the water (*for coring of asphalt rubber cores see Note 1*). At no time shall the water utilized in the coring operation exceed 65° F during the coring operation. Ice shall be utilized to ensure the temperature control of the water being introduced during the cutting operation. An ice chest or other suitably insulated container that can maintain a temperature of less than 70° F shall be used to secure the specimens during transport. The container will be equipped with flat shelving that will support the drilled cores throughout the entire specimen dimension during transport back to the testing facility.

Miscellaneous hand tools to remove the drilled specimen from the drill hole or the core barrel taking great care in not disturbing the specimen more than necessary (refer to fig. 1 in ASTM D5361-05).

321.14.4 Process: The pavement surface at the time of coring shall not exceed a temperature of 90° F; the pavement shall be conditioned with ice or dry ice to ensure that this requirement is met. Immediately after it has been ensured that the pavement has dropped to the required temperature, core drilling shall begin. The operator will then apply an even and continuous pressure (Note 2) to penetrate through the full depth of the pavement. The operator will concurrently ensure that enough water is moving over the core surface as to adequately remove any and all cuttings that could damage the drilled core. After the pavement thickness has been penetrated the core shall be carefully removed from either the drill hole or the core barrel and be immediately transferred to an ice chest or other suitable container. Each individual core shall be placed on a shelf in the cooler with the exposed side of the specimen facing down, or the "top side" down. If the specimen is a two lift core, the only acceptable means of separating lifts is with a power or other acceptable wet saw type of equipment (conforming to ASTM D5361-05); however, at no time shall cores be split using a mallet and screwdriver or metal straight edge when being tested for bulk density. Perpendicularity of the specimen shall be checked in the field after the specimen has been extracted from the surface. The core operator shall hold the core up to eye level and place the core top side down in a "speed square" or small carpenters square. The specimen placed in the square shall not depart from perpendicular to the axis more than 0.5^{o} (approximately equivalent to 1/16 of an inch in 6 inches). If the specimen is outside of this distance from square it shall be discarded in the field and another sample cored that falls within tolerance. The cores upon arriving at the laboratory for testing shall be carefully cleaned and measured for thickness in accordance with ASTM D3549. A speed square shall be utilized to measure perpendicularity as compared to a 90° degree angle and shall not depart from perpendicular to the axis more than 0.5^{o} (approximately equivalent to 1/16 of an inch in 6 inches). All remaining testing shall be done within the parameters of the current project and / or agency required specification.

- End of Section -

*Note 1 – It should be noted that when the material to be cored is a rubberized asphalt mixture a wetting agent such as liquid dish soap shall be added to the water barrel to hinder the material from sticking or allowing the binder to spread during coring.

*Note 2 – This refers to pressure exerted on the core barrel and machine during the coring process. Too much pressure can cause damage to the core barrel and the motor; and too little pressure can cause a glazing of the diamonds, reducing cutting efficiency and premature wear of the barrel.

This Page is Reserved for Future Use

SECTION 324

PORTLAND CEMENT CONCRETE PAVEMENT (PCCP)

324.1 DESCRIPTION:

This item shall consist of construction of a pavement composed of plain jointed Portland cement concrete on a prepared subgrade. The Contractor shall furnish all labor, materials and equipment necessary for the construction of the pavement in accordance with these specifications and in reasonably close conformity to the lines, grades, thicknesses and details indicated by the plans or as established by the Engineer. All tests shall be performed by a laboratory approved by the Engineer.

324.2 MATERIALS:

324.2.1 Portland Cement Concrete: Portland cement concrete shall conform to the applicable requirements of MAG Standard Specifications Section 725 and the additional requirements of this Section.

Concrete shall develop a modulus of rupture of not less than 520 psi within 14 days after placement and not less than 650 psi at 28 days' age as determined by tests of specimens fabricated in accordance with ASTM C31 and tested in accordance with ASTM C78 procedures. The Contractor shall submit data acceptable to the Engineer at least 30 days in advance of the start of concrete paving operations which demonstrate that concrete produced with materials and proportions as proposed for use in the construction will conform to the modulus of rupture requirements of these specifications. The data shall include results of compressive strength tests conducted at the same age as modulus of rupture tests to establish the correlation which can be expected between the flexural and compressive strength properties of the concrete. The Engineer may, at his option, use compressive strength tests of specimens fabricated in accordance with ASTM C31 and tested in accordance with ASTM C39 to verify conformance to the modulus of rupture requirements of these specifications.

The maximum concrete slump shall be as determined by the approved mix design.

324.2.2 Concrete Materials: Portland cement conforming to the requirements of ASTM C150 for Type III, and low-alkali, may be used at the Contractor's option. Aggregates shall be crushed rock or gravel conforming to the requirements of ASTM C33. Coarse aggregate gradation shall conform to requirements for Size No. 57. Fine aggregates shall have an average sand equivalent of not less than 75 when tested in accordance with the requirements of AASHTO T-176 or ASTM D2419.

324.2.3 Reinforcement: Tie bars shall be deformed billet steel reinforcing bars conforming to the requirements of ASTM A615, Grade 40.

Dowel bars shall be plain round bars conforming to the requirements of ASTM A615, Grade 40. One-half the length of each dowel bar shall be painted with one coat of tar paint.

Metal sleeves of an approved design shall be provided for use with dowel bars. Sleeves shall cover 2 inches, plus or minus 1/4 inch, of the dowel, shall have a closed end with a suitable stop to hold the end at least 1 inch from the end of the bar, and shall be designed to prevent collapse during construction. An approved basket support shall be used to hold bars parallel to pavement surface.

324.2.4 Curing Materials: Materials for curing concrete shall conform to the requirements of Section 726.

324.2.5 Joint Materials: Joint sealant shall be a one component, hot-poured type, conforming to the requirements of ASTM D3406.

Back-up rod or tape and bond breakers provided to control the depth of sealant, achieve the desired shape factor, support sealant against indentation and sag, or to prevent bond of the sealant to the bottom concrete surface shall be compatible with the joint sealant material.

Other pour-type joint sealants conforming to the requirements of Subsection 729.2 may be used if approved by the Engineer.

Preformed expansion joint filler shall conform to the requirements of ASTM D1751.

SECTION 337

CRACK SEALING

337.1 DESCRIPTION:

This work consists of furnishing and placing sealant material in Contractor prepared cracks and joints of asphalt concrete or Portland cement concrete pavements. All cracks and joints, including the space between asphalt concrete pavement and the curb and gutter, which have a clear opening of one-quarter inch (¼") or greater, shall be sealed for the length of the crack that equals or exceeds one-eighth inch (⅛") in width. The Contractor shall notify the Engineer when cracks are encountered that have an opening greater than one inch (>1"). The Engineer shall specify the treatment requirements for cracks having an average clear opening greater than one inch (>1").

337.2 MATERIALS:

Sealant materials shall be a premixed, single component mixture of asphalt cement, aromatic extender oils, polymers, and granulized rubber in a closely controlled manufacturing process. Materials shall conform to the following specifications when heated in accordance with ASTM D5078 and the manufacturer's maximum safe heating temperature.

TEST	REQUIREMENT
Cone Penetration (ASTM D5329)	20-40
Resilience (ASTM D5329)	30% Minimum
Softening Point (ASTM D113)	210°F (99°C) Minimum
Ductility, 77°F (25°C) (ASTM D113)	30 cm Minimum
Flexibility (ASTM D3111 *Modified)	Pass at 30°F (-1°C)
Flow 140°F (60°C) (ASTM D5329)	3 mm Maximum
Brookfield Viscosity 400° (204°C) (ASTM D2669)	100 Poise Maximum
Asphalt Compatibility (ASTM D5329)	Pass
Bitumen Content (ASTM D4)	60% Minimum
Tensile Adhesion (ASTM D5329)	400% Minimum
Maximum Heating Temperature	400°F (204°C)
Minimum Heating Temperature	380°F (193°C)
Flash Point (ASTM D92)	450°F Minimum

*Specimen bent 90° over a 1-inch mandrel within 10 seconds.

337.2.1 Certification and Quality Assurance: Prior to application, the Contractor shall submit certification of compliance to the Engineer for all materials to be used in the work.

337.3 EQUIPMENT:

The melter applicator unit shall be a self-contained double boiler device with the transmittal of heat through heat transfer oil. It must be equipped with an on board automatic heat controlling device to permit the attainment of a predetermined temperature, and then maintain that temperature as long as required. The unit shall also have a means to vigorously and continuously agitate the sealant to meet the requirements of Appendix X1.1 of ATSM D6690. The sealant shall be applied to the pavement under pressure supplied by a gear pump with a hose and wand and direct connecting applicator tip. The pump shall have sufficient pressure to apply designated sealant at a rate of at least three (3) gallons (11.4 L) per minute. Melter applicators shall be approved for use by the sealant manufacturer.

337.4 CLEANING AND PREPARING CRACKS OR JOINTS:

Immediately prior to application of sealant, all cracks and joints shall be cleaned of debris and dust. Cracks and joints shall be vacuumed during final cleaning.

337.4.1 Routing: Routing, when specified, shall create a sealant reservoir. Cutting should remove at least ⅛" from each side and produce vertical, intact surfaces with no loosely bonded aggregate. Routing of joints and cracks shall produce a reservoir having a nominal size of ¾" wide x ¾" deep. Variations from the nominal size are subject to acceptance or rejection at the engineer's discretion.

337.4.2 Vacuuming: Final cleaning shall thoroughly clean cracks and joints to a minimum depth of 1". The vacuum unit shall use high pressure 90 psi minimum, dry oil free compressed air to remove remaining dust. The high pressure tool shall be integral with a vacuum unit to collect the dust and residue. Both sides of the crack or joint shall be cleaned. Surfaces will be inspected to assure adequate cleanliness and dryness.

337.5 APPLICATION:

337.5.1 Weather: In no case shall sealant be placed during damp roadway conditions such as wet roadway surfaces or damp material inside the cracks. Operations stopped by the Engineer, due to weather, shall be at no additional cost to the contracting Agency. If installing at night, ensure that dew is not forming on the pavement surface.

Sealant material shall only be applied when pavement temperature exceeds 40°F (4°C). If pavement temperature is lower than 40°F (4°C), it may be warmed using a heat lance that puts no direct flame on the pavement.

337.5.2 Temperature: Sealant temperatures should be maintained at the maximum heating temperature recommended by the manufacture.

337.5.3 Placement of Sealant: The sealant shall be applied in cracks, joints, and sealant reservoirs uniformly from bottom to top and shall be filled without formation of entrapped air or voids.

Cracks and joints shall be slightly overfilled then leveled with a 3" sealing disk or v-shaped squeegee to create a neat band extending approximately 1" on each side of the crack or joint for surface waterproofing. The band shall be as thin as possible and shall not extend more than ⅛ inch above the pavement surface.

If the pavement is to be overlaid with Hot Mix Asphalt within six months of sealant application, cracks shall be routed, and sealant placement shall be recessed ¼" in the crack or joint reservoir with no over band. If routing is not used, the sealant over band thickness and width should be kept as narrow and thin as possible.

During and after placement of the sealant, the Contractor shall protect against harm to persons or animals that may be exposed to the hot material.

337.5.4 Unacceptable Work: The Contractor, at no additional cost to the contracting Agency, shall correct unacceptable work. Unacceptable work shall include, but not be limited to, unsealed cracks, material wastage on the sides of the roadway, and excess quantities of material on the roadway that adversely affects driving.

Correction of unacceptable work shall be accomplished within five working days after notification from the Engineer of the unacceptable work. The Contractor shall not progress to a new area until the unacceptable work is corrected to the satisfaction of the Engineer.

337.5.5 Reporting Requirements: The Contractor shall meet with the Engineer or the Engineer's designated representative on a daily basis and supply a signed daily report indicating the amount of crack sealant material applied for the day in total pounds and total square yards of pavement sealed. In addition, the Contractor shall supply the Engineer with the dates of completion of each road segment.

337.6 OPENING TO TRAFFIC:

Sealant material shall not be exposed to traffic until fully cured. If the sealed area must be open to traffic, blotter material shall be applied to the surface of all uncured sealant material.

All sealed cracks that have an average clear opening of 1½ inches or greater shall have blotter material applied prior to opening to traffic.

337.6.1 Blotter: On two lane roads or where traffic may come in contact with the hot sealant before it cures, a blotter or specialized bond breaking material shall be used to prevent asphalt bleeding and/or pickup of sealant by vehicular traffic. Blotter material shall be compatible with the crack sealant and any surface treatment being used.

337.7 MEASUREMENT:

Accepted pavement crack sealing shall be measured as indicated in the fee proposal by one of the following methods: square yards of pavement surface area sealed, pounds of sealant placed, or linear feet of cracks sealed.

337.8 PAYMENT:

Payment for pavement crack sealing at the contract unit price shall be full compensation for all labor, materials, equipment, tools, and incidentals used for surface preparation, placement of crack sealant and blotter materials, and cleanup.

- End of Section -

This Page is Reserved for Future Use

SECTION 340

CONCRETE CURB, GUTTER, SIDEWALK, SIDEWALK RAMPS, DRIVEWAY AND ALLEY ENTRANCE

340.1 DESCRIPTION:

The various types of concrete curb, gutter, sidewalk, sidewalk ramps, driveways and alley entrances shall be constructed to the dimensions indicated on the plans and standard detail drawings.

340.2 MATERIALS:

Concrete shall conform to the requirements of Section 725. Concrete class shall be as noted on the standard details.

Expansion joint filler shall be ½-inch thick preformed bituminous material in compliance with Section 729, unless otherwise noted.

340.2.1 Detectable Warnings: Truncated dome dimensions and spacing for detectable warnings are defined by the Americans with Disabilities Act Accessibilities Guidelines (ADAAG) for optimal detect-ability and public safety. Detectable warnings shall consist of raised truncated domes aligned in a square grid pattern in conformity to the ADAAG. Truncated domes shall have the following nominal dimensions: base diameter of 1.0 inches (0.9 inches minimum) top diameter of 50 percent of the base diameter minimum to 65 percent of the base diameter maximum, and height of 0.2 inches. Dome center-to-center spacing of 2.35 inches, measured between the most adjacent domes on the square grid. Dome center-to-center spacing for radial installations shall be 1.6 inches minimum and 2.4 inches maximum with a base-to-base spacing of 0.65 inches minimum. Detectable warning edges shall be sized and installed so that dome spacing is maintained across adjoining edges. Each dome shall have a minimum static friction of coefficient of 0.8 as tested per ASTM C1028.

340.2.1.1 Color and Contrast: Detectable warnings shall contrast visually with adjoining surfaces, either light-on-dark or dark-on-light. Specific colors to be used shall be approved by the local jurisdictional agency prior to installation. Detectable warnings shall have integral color throughout.

340.2.1.2 Materials: Detectable warning materials shall be durable with a non-slip surface not subject to spalling, chipping, delamination, or separation. All detectable warnings shall be approved by the local jurisdictional agency prior to installation.

340.2.1.3 Attachment System: Detectable warnings shall be either placed in freshly poured concrete (wet-set) or recessed into pre-formed concrete. Detectable warnings using wet-set placement shall have an anchoring method that assures constant contact of the detectable warning bottom surface with the concrete as it cures, thus rendering the ramp a single monolithic structure. The thicker and heavier detectable warnings lowered into pre-formed recesses in the concrete substrate must demonstrate a firm fitting into metal reinforced frames without gaps along the edges that can channel water, sand, or debris. They must also be able to resist movement (i.e. sliding, rocking, or lifting) once in service. All attachment systems shall be approved by the local jurisdictional agency.

340.3 CONSTRUCTION METHODS:

Existing concrete shall have a clean vertical edge where it is to be joined by new construction. Sawcutting is required when the existing matching edge is not a straight vertical edge.

340.3.1 Subgrade Preparation: The subgrade shall be constructed and compacted true to grades and lines shown on the plans and as specified in Section 301. All soft or unsuitable material shall be removed to a depth of not less than 6 inches below subgrade elevation and replaced with material satisfactory to the Engineer. Removal and replacement of soft or unsuitable materials will be paid for as extra work.

Subgrade classified as marginally expansive or expansive as defined in Table 340-1 shall be treated as follows unless the construction documents require alternative measures for mitigation of expansive soils. The upper 6 inches of marginally expansive soils shall be compacted per Section 301.3 at a moisture content between 0% to 3% above optimum moisture per ASTM D698. Expansive soils shall be considered unsuitable and shall be treated or removed and replaced with material as directed by the Engineer. Alternate corrective measures contained in an existing geotechnical report or new site analysis can be submitted to the Engineer for approval. The submittal of alternative corrective measures must be a recommendation of an

Arizona registered engineer and have the professional seal affixed.

Table 340-1

Description	Percent Fines (– #200 sieve) (1)	Plasticity Index (2)	Additional Testing
Non-expansive	> 20%	≤ 15	None
Potentially expansive		> 15	Perform Swell Test (3)

Description	% Swell (3)
Non-expansive	< 1
Marginally expansive	1 – 3
Expansive	> 3

(1) Tested in accordance with ASTM C117
(2) Tested in accordance with AASHTO T-90 (wet prep per AASHTO T-146)
(3) Swell Test: Samples for swell tests shall be re-molded in accordance with ARIZ 249 (ADOT Materials Testing Manual) to 95% of maximum dry density at optimum moisture as determined by ASTM D698 and tested for one-dimensional expansion in accordance with the applicable portions of ASTM D4546 applying a surcharge of 144 psf.

Material removed for construction shall not be placed on the base and/or surfacing material already in place on the roadway nor shall the excavated material be placed in such a manner as to interfere with access to property or traffic flow in the street.

340.3.2 Formwork: Concrete curbs, gutters and sidewalks shall be constructed by the conventional use of forms, or may be constructed by means of an appropriate machine when approved by the Engineer.

If machines designed specifically for such work and approved by the Engineer are used, the results must be equal to or better than that produced by the use of forms. If the results are not satisfactory to the Engineer, the use of the machine shall be discontinued and the Contractor shall make necessary repairs at his own expense. All applicable requirements of construction by use of forms shall apply to the use of machines.

Forms conforming to the dimensions of the curb, gutter, sidewalk, sidewalk ramps, driveway, and alley entrance shall be carefully set to line and grade, and securely staked in position. The forms and subgrade shall be watered immediately in advance of placing concrete.

Forms shall be thoroughly cleaned each time they are used, and shall be coated with a light oil, or other releasing agent of a type which will not discolor the concrete.

340.3.3 Concrete Placement: The concrete shall be thoroughly spaded away from the forms so that there will be no rock pockets next to the forms. The concrete may be compacted by mechanical vibrators approved by the Engineer. Tamping or vibrating shall continue until the mortar flushes to the surface, and the coarse aggregate is below the concrete surface. The surface shall then be struck off and worked to grade and cross section with a float.

If machine placement is used, the machine shall place, consolidate and finish the concrete in one complete pass, requiring a minimum of hand finishing producing a dense and homogeneous section. A form shall trail behind the machine for such a distance that no appreciable concrete slumping will occur. Final finishing shall be as specified in Section 340.3.7, Form Removal and Finishing.

340.3.4 Joints: Shall be constructed in a straight line, vertical plane and perpendicular to the longitudinal line of the sidewalk, curb and gutter, single curb, etc., except in cases of curved alignment, where they shall be constructed along the radial lines of the curve.

Curb and gutter joints shall match the location of concrete pavement joints when abutting concrete pavement.

The space between joints in curbs and gutters (space between contraction joints or between contraction and expansion joints) shall not exceed ten feet.

Sidewalk that abuts curb or gutter shall have joints that match the curb or gutter joints.

The space between sidewalk joints shall not exceed 125% of the sidewalk width (for example: maximum joint spacing for 5 foot wide sidewalk is 6.25 feet).

340.3.4.1 Expansion Joints: Expansion joints shall be constructed to the full depth and width of the concrete. The expansion joint material shall extend fully through the concrete and one inch into the subgrade with the top of the expansion joint material one-quarter inch below the top surface. Expansion joint material shall be secured in place prior to placement of concrete.

Expansion joints shall be installed along all abutting structures to provide complete separation from the structure.

Sidewalk, curb, and gutter expansion joints shall be installed at all radius points, at both sides of each driveway, at both sides of each alley entrance. The maximum distance between expansion joints shall be 50 feet.

340.3.4.2 Contraction Joints: Unless otherwise specified, the large aggregate in contraction joints shall be separated to either side of the joint for a minimum depth equal to 25% of the concrete thickness; the finished depth shall be a minimum of 3/4 inch.

340.3.5 Edges: All exposed edges shall be shaped with a suitable tool to form edges having the shape as indicated on the referenced detail.

340.3.6 Detectable Warnings: Detectable warnings shall be installed perpendicular to the direction of pedestrian/wheelchair travel and have a minimum width of 24 inches measured perpendicular to the edge of the roadway or rail crossing. The base surface of detectable warnings shall be installed flush with the adjacent walkway surface; the truncated domes shall extend above the walkway surface. The boundary between detectable warnings and the adjacent walkway shall provide a flush uniform surface that will not cause ponding of water nor present a tripping hazard. Partial domes at the edge of the detectable warning shall be made flush to match the base surface of the detectable warning. Detectable warnings installed on curb ramps shall extend the full width of the ramp depression.

Detectable warnings installed on sidewalk ramps shall modify the sidewalk concrete thickness at the detectable warning to provide a minimum concrete thickness of four-inches (4”). When detectable warnings are modules inset into the sidewalk ramp, the bottom surface of the sidewalk shall be lowered a distance equal to or greater than the module thickness to maintain the minimum sidewalk thickness. The sidewalk bottom surface shall have a minimum transition taper length of 12” between the thickened and normal depth sections of sidewalk. The detectable warning surface shall be located so that the edge nearest the curb line is 6 inches minimum and 8 inches maximum back from the face of curb.

Detectable warning surfaces for pedestrian at-grade rail crossings not located within a street or highway shall be installed on each side of the rail crossing, located as shown on plans. Detectable warnings shall extend the full width of the pedestrian walkway.

340.3.7 Form Removal and Finishing: The front face form shall not be removed before the concrete has taken initial set and has sufficient strength to carry its own weight. Gutter forms and rear forms shall not be removed until concrete has hardened sufficiently to prevent damage to the edges. Any portion of concrete damaged while stripping forms shall be repaired or replaced at no additional cost to the Contracting Agency.

After the forms are removed, the joints shall be tooled and the surface finished with a float to remove all imperfections. As needed, retool joints after finishing to prevent groove bonding. In all cases, the resulting surface shall be smooth and of uniform color with all rough spots, projections, and form stakes removed. No plastering of the concrete will be allowed. The concrete work shall have a true surface; shall be free from sags, twists, or warps; have a uniform appearance; and be true to the lines, grades, and configurations indicated on the drawings.

Surfaces shall be light broom finished; flow lines shall be troweled for a smooth finish.

If the evaporation rate on the concrete surface exceeds the rate of bleeding of the concrete due to weather conditions, materials used, or for any other reason, and there is any likelihood of the fresh concrete checking or cracking before the curing operation, measures shall be taken to prevent the rapid evaporation of water from the surface during finishing operations. When allowed by the Engineer, the addition of water to the surface may be permitted as an indirect fog spray with approved spray equipment immediately after screeding and/or between finishing operations. A commercial evaporation reducer that forms a monomolecular film may also be sprayed onto the concrete surface in accordance with the manufacturer’s recommendations. At no time will free water/evaporation reducer be worked into the concrete surface. Approved measures shall continue until curing operations per Section 340.3.8, Curing, are started in the particular area affected.

The Contractor shall stamp the company name and year on each end of the sidewalk or sidewalk ramp constructed. The letters shall not be less than 3/4 inch in height and the depth of the stamped impression shall be between 1/8-inch and 1/4-inch.

340.3.8 Curing: As soon after the completion of the finishing operation as the condition of the concrete will permit, all exposed surfaces shall either be sprayed with a pigmented curing compound or sealed with a material conforming to Section 726. Curing compound shall be applied under pressure through a spray nozzle in such manner and quantity as to entirely seal all exposed concrete surfaces with a uniform film. The membrane shall be applied in two applications for a total coverage of 150 square feet per gallon. Concrete surfaces shall be kept damp until the curing compound is applied. Should the curing compound seal be broken or damaged before the expiration of 10 days after the placing of the concrete, the break shall be immediately repaired by the application of additional curing compound over the damaged area.

The need for adequate curing is greatest during the first few hours after placement of the concrete.

340.3.9 Tolerances: The face, top, back, and flow line of the curb and gutter shall not deviate in excess of 1/4-inch over 10 feet, as tested with a 10-foot straightedge or curve template, longitudinally along the surface.

The surface of concrete sidewalk or sidewalk ramp shall not deviate in excess of 1/8-inch over 5 feet as tested with a 5-foot straightedge except for the 1/4-inch recess of the preformed material in expansion joints.

All finished concrete elevations shall not deviate from the elevations shown on the plans, or indicated by typical sections or standard details referenced within the construction documents, by more than 1/2 inch.

When required by the Engineer, gutters shall be water tested. The Contractor shall establish flow in the length of gutter to be tested by supplying and distributing water from a hydrant, tank truck or other source. After the supply of water is shut off and water has stopped flowing, the gutter shall be inspected for evidence of ponding or improper shape. The work shall be deemed deficient if water is found ponded in the gutter to a depth greater than 1/2 inch or ponding extends onto the adjacent asphalt pavement.

Areas between elevations shown on the plans shall be straight graded or smoothly transitioned through a vertical curve in a manner approved by the Engineer or as otherwise indicated on the construction documents.

340.3.10 Deficiencies: Any section of the work deficient in depth or not conforming to the plans or specifications shall be removed and replaced by the Contractor at no additional cost to the Contracting Agency. Replacement or reconstruction shall be from joint to joint.

Concrete work that does not comply with tolerance requirements of Section 340.3.9, Tolerances, shall be removed and replaced. Remove and replace gutters that exceed the ponding tolerance. Grinding shall only be allowed if approved by the Engineer.

340.4 BACKFILLING:

Unless otherwise specified the Contractor shall backfill behind the curbs, sidewalk or sidewalk ramps with soil native to the area to the lines and grades shown on the plans.

340.5 MEASUREMENT:

Concrete curbs and gutters of the various types shown on the plans and in the proposal will be measured along gutter flow line through inlets, catch basins, driveways, sidewalk ramps, etc., by the lineal foot to the nearest foot for each type, complete in place. Measurement for curb terminations and transitions shall be included with the linear measurement of the various types of curb or curb and gutter as shown on the plans and in the proposal.

Curb and gutter type shall be based on the configuration of the final exposed surfaces. The increased curb and gutter depth required at valley gutter aprons or driveways shall not be measured as a separate pay item; any additional Contractor cost shall be included in the unit cost associated with the valley gutter, driveway or other associated item.

Concrete sidewalks, driveways, alley intersections, valley gutters and aprons will be measured to the nearest square foot complete in place.

Detectable warnings shall not be measured for payment. Detectable warnings are considered integral to the walking surface that they form a part of and the cost is included in the related pay item.

Curb ramp installations shall be measured as complete installed units and shall include the ramp curb and the walking surfaces between the ramp curb and back of curb and gutter or single curb. Single curb or curb and gutter located at the edge of roadway shall be measured and paid for separately. The surface area of curb ramps shall not be included in the measured quantity for sidewalk.

340.6 PAYMENT:

Payment will be made in accordance with the unit prices or lump sums as set forth in the proposal. Such payment shall include full compensation for furnishing all labor, material, tools and equipment and accomplishing all work in conformance with the contract documents.

Over-excavation of soft, expansive or unsuitable materials and installation granular materials will be paid as a separate pay item, not included with the above measured pay items.

- End of Section -

SECTION 342

DECORATIVE PAVEMENT
CONCRETE PAVING STONE OR BRICK

342.1 GENERAL:

The Contractor shall furnish all necessary labor, material, tools and equipment to complete the proper installation of decorative concrete pavers used in medians, crosswalks, intersections or as otherwise noted in the Contract Documents. This includes furnishing a 10-foot straightedge to accomplish the level test when required by this specification.

The decorative pavement shall be true in line and grade and installed to coincide and align with the adjacent work elevation. All edges shall be retained to secure the pavers and sand laying course.

The Contractor shall construct a sample panel 10-feet by 10-feet for inspection and approval by the Engineer, prior to the actual installation for the project. Once approved, the panel shall be used as a standard for the remainder of the work. The panel shall remain undisturbed throughout the construction of the pavers and final approval by the Engineer.

342.2 MATERIALS:

342.2.1 Aggregate Base Course: Aggregate Base Course shall be per Table 702-1.

342.2.2 Portland Cement Concrete: When the pavers are subject to vehicular traffic, Portland Cement Concrete shall be Class A per Section 725. All other locations, the Portland Cement Concrete shall be a minimum of Class B per Section 725.

342.2.3 Sand: Sand used for laying course shall conform to ASTM C33 except for the gradation. The gradation shall comply with Table 342-1.

TABLE 342-1								
SAND GRADATION								
Sieve Size	3/8 inch	No. 4	No. 8	No. 16	No.30	No. 50	No. 100	No. 200
Percent Passing	100	95-100	85-100	15-85	25-60	10-30	2-10	0-1

342.2.4 Concrete Pavers: Pavers shall have a minimum of thickness of 80 mm (3.15) when installed in traffic bearing areas and 60 mm (2.36 in.) When installed in non traffic bearings areas. Pavers shall be of an interlocking design conforming to ASTM C936-82. Pavers shall be sound and free of defects that would interfere with the proper placing of the unit or impair the strength or permanence of the construction. The Contractor shall submit two samples of each type of pavers used on the project for review and approval by the Engineer prior to any work. The pavers and materials used in their manufacture shall conform to the following:

(A) Compressive Strength: Pavers shall have a minimum compressive strength of 8,000 psi in accordance with ASTM C140.

(B) Absorption: The average absorption shall not be greater than 5 percent, with no individual unit absorption greater than 7 percent.

(C) Portland Cement: Cement shall comply with Section 725.2, Type II.

(D) Aggregates: Aggregates shall conform to ASTM C33 (washed, graded sand and rock, no expanded shale or lightweight aggregates).

(E) Other Constituents: Coloring pigments shall be applied integrally to the concrete. Air entraining admixtures, coloring pigments, integral water repellents, and finely ground silica shall be previously established as suitable for use in concrete and either shall conform to ASTM standards where applicable, or shall be shown by test or experience not to be detrimental to the concrete.

(F) Physical Properties: The size, shape, design and color of the pavers shall be as noted in the Contract Documents.

SECTION 343

EXPOSED AGGREGATE PAVING

343.1 DESCRIPTION:

Exposed aggregate paving consists of placing a concrete slab with exposed aggregate in the surface of the finished concrete. This exposed aggregate paving is designed for decorative or pedestrian use only. It should not be used in areas subject to vehicular traffic.

343.2 MATERIAL:

343.2.1 Concrete: Concrete shall be Class A per Section 725 with a maximum slump of 3 inches.

343.2.2 Exposed Aggregate: The exposed aggregate shall be uncrushed riverrun rocks. The Contractor shall provide at least a 10-pound sample for approval by the Engineer prior to any aggregate paving.

(A) When the paving is for decorative use only, no pedestrian traffic, the aggregate shall not be larger than 3 inches or smaller than 1 ½ inches.

(B) When the paving is to be used for pedestrian traffic, the aggregate shall be not larger than 2 inches or smaller than 1 inch.

343.3 CONSTRUCTION PROCEDURE:

The Contractor shall construct a sample panel 3 feet by 3 feet for inspection and approval by the Engineer, prior to actual construction. When approved, this panel shall be used as a standard for the remainder of the work.

After the slab has been placed, screeded and darbied, the aggregate shall be hand-scattered so that the entire surface is evenly covered. The surface shall be reworked so that the aggregate will be embedded just beneath the surface. The concrete shall completely surround and lightly cover the aggregate leaving no holes or voids.

A non-staining surface retarder will be applied to provide a surface penetration of at least 1/8-inch and the surface will be lightly screed to ensure penetration. The surface will be covered with a protective material for the period of time recommended by the retarder manufacturer. After this time has elapsed, the upper, retarded layer of concrete will be removed using a water jet stream and a brush. The protective cover will be replaced and the concrete allowed to cure. After curing, the surface shall be cleaned and a silicone seal applied.

343.4 MEASUREMENT AND PAYMENT:

Measurement will be by the square foot. Payment will be made at the unit bid price per square foot. This price shall be full compensation for all labor, material, tools, and equipment required to complete the work.

- End of Section -

SECTION 345

ADJUSTING FRAMES, COVERS, VALVE BOXES METER BOXES AND PULL BOXES

345.1 DESCRIPTION:

The Contractor shall furnish all labor, materials, and equipment necessary to adjust all frames, covers and valve boxes as indicated on the plans or as designated by the Engineer. The frames shall be set to grades established by the Engineer.

The Contractor may elect to remove old frames, covers, and valve boxes and then install new frames and/or boxes in accordance with standard detail drawings at no additional cost to the Contracting Agency.

The Contractor shall be responsible for maintaining an accurate description and location of all items to be adjusted. The locations shall be referenced with map documentation by the use of swing ties or GPS locations. This information shall be supplied to the Engineer and utility owner(s) prior to taking any action that would hide or restrict access to the items to be adjusted.

Any missing or defective frames, covers, valve boxes or related hardware shall be reported to the Engineer in writing during the initial location process to allow for timely replacement. The Engineer shall be responsible for providing replacement items to the contractor. The contractor is responsible for providing items required to accomplish the required adjustments such as additional adjusting rings, valve box extensions, meter box extensions, and pull box extensions.

345.2 LOWERING PROCEDURE:

If required, manholes, valve boxes, or survey monuments located within the paved areas to be milled or reconstructed shall be lowered to an elevation that will allow required work to be accomplished without damaging the facilities. Care shall be taken to prevent entrance of any material into the lowered facilities. Lowering shall be to a depth that will prevent damage to the utility during the construction activities.

All manhole frames, valves boxes, survey hand hole frames and related items removed by the contractor during the lowering process shall be maintained in a secure area, and the contractor shall bear full responsibility for the material. Any hardware items lost or damaged by the contractor shall be replaced in kind, at no additional cost to the Contracting Agency.

Preparation for Milling: Temporary asphalt concrete shall be placed over the steel plate filling the excavated area. The temporary pavement shall be maintained until removed during the adjustment to final grade. For manholes located on major streets that are to be kept opened to vehicular traffic, hot mix asphalt shall be used to backfill the excavated areas and compacted flush with the existing pavement prior to opening up to traffic. In residential or low volume streets with minimal traffic, cold mix or other approved product may be used for temporary pavement. No measurement or payment shall be made for temporary pavement placement or removal.

345.3 ADJUSTING FRAMES:

The Contractor shall loosen frames in such a manner that existing monuments, cleanouts, manholes, and valve boxes will not be disturbed or damaged. Debris shields shall be used to prevent debris from entering sanitary or storm sewers. All loose material and debris shall be removed from the excavation and the interiors of structures prior to resetting frames. If dirt or debris enters the sewer system the contractor shall be responsible for cleaning the sewer system for a minimum of one reach (the next downstream structure from the contamination point.)

Frames shall be set to match finished grade or the elevations and slopes established by the Engineer. Manhole frames shall be firmly blocked in place with masonry or metal supports. Spaces between the frame and the facility shall be sealed on the inside to prevent any concrete from entering the hand hole or manhole. A Class AA concrete collar shall be placed around and under the frames to provide a seal and properly seat the frame at the required elevation and slope. Concrete shall be struck off flush with the top of the existing pavement.

Adjustments of utilities, if located within the asphalt pavement, shall be made after placing the final surface course when there is only a single lift of pavement required. When there are multiple lifts of pavement required, adjustments may be made before the final surfacing or as directed by the Engineer.

After removal of the temporary asphalt pavement in the area of adjustment, and prior to placement of the final concrete collar ring (as shown on Details 270 and 422) the asphalt pavement in proximity of the adjustment shall be be rolled with a self-propelled steel wheel roller if requested by the Engineer.

345.4 ADJUSTING VALVE BOXES:

Valve boxes shall be adjusted to the new elevations indicated on the plans, or as established by the Engineer.

Adjustable valve boxes shall, if possible, be brought to grade by adjustment of the upper movable section. Any excavated area shall be filled with Class AA concrete to the level of the existing pavement, or as directed by the Engineer.

Concrete pipe valve boxes in areas not subject to vehicular traffic shall be adjusted to grades by installing a suitable length of metal or concrete pipe, of the same inside diameter as the present valve box, and reinforcing the outside with a concrete collar extending from at least 2 inches below the joint up to and flush with the top of the valve box extension. This collar shall be of Class AA concrete. The dimension from the outside of the box to the outside of the collar shall not be less than 2 inches. This adjustment will be known as Type B.

In areas subject to vehicular traffic and where the existing valve box is a Type B, the adjustment to the new elevation shall be made using the old cover and installing a new 8 inch frame in accordance with the standard detail for installation of valve boxes in vehicular traffic areas. This adjustment shall be known as Type BA.

Adjustment of existing Type A valve boxes to the new elevations shall be as described in Subsection 345.2. This adjustment shall be known as Type A.

345.5 ADJUSTING MANHOLE AND VALVE COVERS WITH ADJUSTMENT RINGS:

Adjusting rings may be used to raise manhole covers in asphalt pavements when deemed acceptable by the Engineer. The amount of adjustment, thickness of seal or overlay, and cross slope will be considered when using adjusting rings. Each location where an adjusting ring is used must have a sufficient depth of asphalt to assure the proper installation and operation of the ring. The rings shall be made of a concrete, non-metallic, polypropylene or fiberglass material and installed per the manufacturer's specifications. The rings shall be approved by the Engineer.

The concrete collar ring around the frame or valve box shall be circular, and shall be a minimum of eight (8) inches thick, placed flush with the adjacent new pavement surface. Concrete shall be a minimum of Class AA on all paved streets. All concrete shall be obtained from plants approved by the Engineer.

If required by the Contracting Agencies specifications or details, a single No. 4 rebar hoop will be placed in each adjustment collar. The hoop diameter shall be such that its placement is centered between the edge of the manhole frame or valve box, and the outer edge of the concrete collar, the depth of the hoop shall be centered in the thickness of the collar. Each concrete ring shall be scored radially at quarter-circle points. Score lines shall be ¼ -inch wide by ½ - inch deep. The concrete collar surface shall be rough broom finished. (See Details 270 and 422).

Traffic shall not be allowed on the concrete collars until the concrete had reached a minimum compressive strength of 2500 psi on residential and 3000 psi on collector and major streets. On major streets the contractor shall use "high-early" in the concrete mix, approved by the Engineer, to minimize delay in reopening the street(s) to traffic.

345.6 MEASUREMENT:

The quantities measured will be the actual number of frames, covers and value boxes of each type, adjusted and accepted.

345.7 PAYMENT:

Accepted quantities, will be paid for at the contract unit price. Payment shall be compensation in full for all materials, labor, equipment and incidentals necessary to complete the work.

- End of Section -

SECTION 350

REMOVAL OF EXISTING IMPROVEMENTS

350.1 DESCRIPTION:

This work shall consist of removal and disposal of various existing improvements, such as pavements, structures, pipes, conduits, curbs and gutters, and other items necessary for the accomplishment of the improvement.

350.2 CONSTRUCTION METHODS:

350.2.1 Utilities

The removal of existing improvements shall be conducted in such a manner as not to injure active utilities or any portion of the improvement that is to remain in place.

A utility may be abandoned in place below a new major structure that is part of the work only if approved by the Agency and solidly filled with grout using methods approved by the Agency. All abandoned utilities to remain and the approved abandonment method shall be noted on the installation record drawings.

Utilities to be removed by the Contractor shall be disconnected and taken out in accordance with the requirements of the utility owner to the limits shown on the plans. Utility removal shall not be performed until a release has been obtained from the utility stating that their respective service connection and appurtenant equipment have been disconnected, removed or sealed and plugged in a safe manner.

The Engineer shall be notified when utilities are encountered that are not shown on the plans.

350.2.2 Others

Sidewalks shall be removed to a distance required to maintain a maximum slope for the replaced portion of sidewalk, for one inch per foot and all driveways shall be removed to a distance as required by standard details.

Portland cement concrete pavements, curbs and gutters and sidewalks designated on the plans for removal shall be saw-cut at match lines, in accordance with Section 601 and removed.

Portions of asphalt concrete pavements designated on the plans for removal shall be done in accordance with Section 336.

Removal of trees, stumps, roots, rubbish, and other objectionable materials in the right-of-way shall be done in accordance with Section 201.

350.2.3 Backfill and Disposal

Backfill of all excavated areas below structures shall be in accordance with Section 206.4. Backfill and compaction of all other excavated areas shall be compacted to the densities as prescribed in Section 601 (trenches) or Section 211 (holes, pits or other depressions).

All surplus materials shall be immediately hauled from the jobsite and disposed of in accordance with Section 205.6.

350.3 MISCELLANEOUS REMOVAL AND OTHER WORK:

This work shall include, but not be limited to the following, where called for on the plans:

(A) Relocate existing fence and gate.

(B) Remove and reset mail boxes.

(C) Remove signs and bases in right-of-way.

(D) Remove planter boxes, block walls, concrete walls, footings, headwalls, irrigation structures, and storm water inlets.

PART 400

RIGHT-OF-WAY AND TRAFFIC CONTROL

Section	Last Revised	Title	Page
401	1998	Traffic Control	401-1
405	1998	Monuments	405-1
410	1998	Precast Safety Curbs	410-1
415	2014	Flexible Metal Guardrail	415-1
420	1998	Chain Link Fences	420-1
424	1998	Parkway Grading	424-1
425	1998	Topsoils	425-1
430	2014	Landscaping and Planting	430-1
440	1999	Sprinkler Irrigation System Installation	440-1

This Page Reserved for Future Use

SECTION 415

FLEXIBLE METAL GUARDRAIL

415.1 DESCRIPTION:

The work under this section shall consist of furnishing all materials, constructing new guardrail, and delineating guardrail sections at the locations shown on the plans.

Guard rail end treatments shall be as specified on the plans or special provisions.

415.2 MATERIALS:

The rail elements, bolts, nuts and other fittings shall conform to the specifications of AASHTO M 180, except as modified in this section. The rail metal shall conform to AASHTO M 180, Type I, Class A and in addition to the requirements of AASHTO M 180, shall withstand a cold bend, without cracking of 180 degrees around a mandrel of a diameter equal to 2 1/2 times the thickness of the plate.

Three certified copies of mill test reports of each heat from which the rail element is formed shall be furnished to the Engineer.

All materials shall be new, except as otherwise noted on the plans or special provisions.

Railing Parts furnished under these specifications shall be interchangeable with similar parts regardless of source. All surfaces of guardrail elements that are exposed to traffic shall present a uniform, pleasing appearance and shall be free of scars, stains or corrosion.

Nails shall be 16 penny common galvanized.

Bolts shall have shoulders shaped to prevent the bolts from turning.

Unless otherwise specified the rail elements, terminal sections, bolts, nuts, and other fittings shall be galvanized in accordance with Section 771. Where galvanizing has been damaged, the coating shall be repaired in accordance with Section 771.

Guardrail reflector tabs shall be either 3003-H14 Aluminum strip 0.063 ± 0.004 inches thick, or steel strip 0.078 ± 0.008 inches thick galvanized in accordance with ASTM A 653 coating designation G 90. The reflector material shall be high-reflectivity sheeting, either silver-white or yellow and shall conform to the requirements of Arizona State Department of Transportation Standard Specifications for Road and Bridge Construction. Adhesive for sheeting attachment to the metal tab shall be of the type and quality recommended by the sheeting manufacturer. Reflector tabs shall conform to the Reflector Tab Detail of Maricopa County Department of Transportation Standard Detail 3002.

Timber for posts and blocks shall be rough sawn (unplanned) or S4S with the nominal dimensions indicated. Any species or group of woods graded in accordance with the requirements for Timber and Posts of the Western Wood Products Association may be used. Timber shall be No. 1 or better, and the stress grade shall be as follows:

6” by 8” Post and Block	1200 psi
8” by 8” Post and Block	900 psi
10” by 10” Post and Block	900 psi

When the plans show guardrail systems using 8” by 8” timber posts and blocks, the Contractor may use 8 1/4” nominal size posts and blocks with a stress grade of 825 pounds per square inch.

At the time of installation, the dimensions of timber posts and blocks shall vary no more than plus or minus 1/2” from the nominal dimensions as specified on the project plans. The size tolerance of rough sawn block in the direction of the bolt holes shall vary no more than plus or minus 3/8”.

All timber shall have a preservative treatment as per the requirements of AASHTO M 133.

Structural steel shapes shall conform to the requirements of ASTM A36 and be galvanized in conformance with the appropriate requirements of AASHTO M 111. Dimensions shall meet the dimensional requirements of the American Institute of Steel Construction.

Steel tubes shall conform to the material requirements of ASTM A500 or A501 and be galvanized in conformance with the requirements of AASHTO M 180, Type 1.

415.3 CONSTRUCTION REQUIREMENTS:

415.3.1 General: The construction of the various types of guardrail shall include the assembly and erection of all component parts complete at the locations shown on the project plans or as directed by the Engineer.

Posts shall be as indicated by plans, standard details, or special provisions. Only one type and size of post and block shall be used for any one continuous length of guardrail.

Terminal sections shall be installed in accordance with the manufacturer's recommendations.

Workmanship shall be equivalent to good commercial practice and all edges, bolt holes and surfaces shall be free of torn metal, burrs, sharp edges and protrusions.

The various types of guardrail shall be constructed with wood posts and wood blocks, except as otherwise noted on the plans.

The bolted connection of the rail element to the post shall withstand a 5,000 pound pull at right angles to the line of the railing. All metal work shall be fabricated in the shop. No punching, cutting or welding shall be done in the field, except as provided for by the project plans. All metal cut in the field shall be cleaned and the galvanizing repaired in accordance with Section 771.

Where field cutting or boring of wood posts and blocks is permitted, the affected areas shall be thoroughly swabbed with at least two passes of the same type of wood preservative as initially used.

Where wood posts with rectangular sections are used, the posts shall be set so that the longest dimension is perpendicular to the rail.

All bolts shall extend beyond the nuts a minimum of two threads, except that all bolts adjacent to pedestrian traffic shall be cut off flush to the nut.

Bolts extending more than 2" beyond the nut shall be cut off to less than ½" beyond the nut.

Unless otherwise shown on the plans, bolts shall be torqued as follows:

Diameter of Bolt	Torque, Foot/Pounds
5/8"	45-50
3/4"	70-75
7/8" and larger	120-125

All bolts, other than those specified to be torqued, shall be securely tightened.

When guardrail is being constructed under traffic, the work shall be conducted so as to constitute the least hazard to the public. Guardrail work shall be performed in the direction of traffic flow when feasible.

Any section of guardrail that is removed for modification shall be replaced within five calendar days of the date the guardrail is removed, unless otherwise directed by the Engineer. At the end of each day, incomplete guardrail sections having an exposed end toward oncoming traffic shall have an appropriate temporary protective end treatment acceptable to the Engineer set securely in place together with approved overnight traffic control devices set in place.

415.3.2 Delineation: The maximum spacing between reflector tabs shall not exceed six posts. The slotted part of the tab shall be installed under the mounting bolt head so that the Reflectorized surface of the tab faces oncoming traffic. The exposed ends of the slotted part of the tab shall be bent up against and then over the top of the bolt head. The color of the reflective portion of the barrier markers shall conform to the color of the adjacent edge line. Silver-faced reflector tabs shall be installed on the right

hand side of all roadways, and yellow-faced tabs shall be installed on the left-hand side of one-way, or median divided roadways.

415.3.3 Roadway Guardrail: Wood posts shall be used for new guard rail installations unless otherwise indicated by plans or special provisions. Wood posts shall either be driven or placed in manually or mechanically dug holes; however, driven posts will not be permitted at locations where damage to the curb, gutter, sidewalk, buried items, shoulders or pavement might occur. The Engineer will be the sole judge as to whether driving of posts will be allowed. Driving of posts shall be accomplished in a manner that will prevent battering, burring, or distortion of the post. Any post which is damaged to the extent it is unfit for use in the finished work, as determined by the Engineer, shall be removed and replaced at no additional cost to the Agency.

The posts shall be firmly placed in the ground. The space around posts shall be backfilled with selected earth, free of rock, placed in layers approximately 4 inches thick and each layer shall be moistened and thoroughly compacted to the density of the surrounding material.

Where pavement is disturbed in the construction of guardrail, the damaged surfacing shall be repaired as approved by the Engineer.

Where a culvert or other obstacle is at an elevation which would interfere with full depth post placement, guardrail installation shall comply with requirements of Section 415.3.4 Bolted Guardrail Anchors or Section 415.3.5 Nested Guardrail.

Wood blocks shall be toe nailed to the wood post with one 16 penny galvanized nail on each side of the top of the block. Wood blocks shall be set so that the top of the block is no more than ½" above or below the top of the post, unless otherwise shown on the project plans.

Rail elements shall be spliced at 25 foot intervals or less. Rail elements shall be spliced at posts unless otherwise shown on the project plans and shall be spliced by lapping in the direction of traffic in the nearest adjacent lane. Rail elements at joints shall have full bearing. When the radius of curvature is 150 feet or less, the rail elements shall be shop curved.

The Contractor shall dispose of surplus excavated material remaining after the guard railing has been constructed.

415.3.4 Bolted Guardrail Anchors: Where the elevation of the top surface of a concrete box culvert or other similar installation prevents the placement of a post of the specified length, the posts shall be shortened and anchored in accordance with Maricopa County Department of Transportation Standard Detail 3010.

415.3.5 Nested Guardrail: This work shall consist of furnishing and constructing nested guardrail, Type 1, 2, or 3, as shown in Maricopa County Department of Transportation Standard Details 3008-1 through 3008-3.

415.3.6 Guardrail to Structure Transitions: Guardrail transitions shall be constructed in accordance with requirements shown on the plans and special provisions.

415.4 MEASUREMENT:

The limits of measurement for roadway guardrail shall be as detailed in Maricopa County Department of Transportation Standard Detail 3016, except as otherwise noted on the plans or special provisions. Guardrail, of the type shown on the project plans, will be measured by the linear foot along the face of the rail element from center to center of posts, exclusive of guardrail terminals, guardrail end terminal assemblies, nested guardrail (Types 1, 2 and 3) and guardrail transitions.

Delineation is considered a part of installation of guardrail and hence will not be measured as a separate item.

The accepted quantities of guardrail posts secured with bolted guardrail anchors will be measured by the unit each.

Nested guardrail, Types 1, 2, or 3, and guardrail transitions will be measured by the unit each, complete in place and accepted as shown on the plans.

415.5 PAYMENT:

Payment for accepted quantities of each type of guardrail will be made at the contract unit price. Payment shall be full compensation for furnishing materials and installing guardrails, complete in place including excavation, backfill, and disposal of surplus material.

Payment for Bolted Guardrail Anchors will be at the contract unit price, and shall be full compensation for the work, complete in place, including steel brackets, hardware, excavation, backfill, removing and replacing surfacing, cutting and fitting steel beam posts or timber posts, drilling anchor bolt holes in steel posts, timber posts, and box culverts, and disposal of surplus materials.

Payment for guardrail transitions will be at the contract unit price. Payment shall be full compensation for furnishing materials and installing guardrail transitions, complete in place including excavation, backfill, and disposal of surplus material.

- End of Section -

SECTION 430

LANDSCAPING AND PLANTING

430.1 DESCRIPTION:

This section shall govern the preparation and planting of landscape areas required in the Plans or Specifications. Materials will be in accordance with Section 795.

Existing utilities and improvements not designated for removal shall be protected in place. Any damages will be repaired by the Contractor at no additional cost to the Contracting Agency.

Unless otherwise provided, walls, curbs, planter boxes, irrigation systems, and other improvements shall be constructed after rough grading has been completed and prior to finish grading.

430.2 GENERAL:

Landscape or planting areas shall not be cultivated when they are so wet as to cause excessive compaction or so dry as to cause excessive dust or the formation of large clods.

Prior to any grading the areas shall be cleared and grubbed in accordance with Section 201, Clearing and Grubbing.

Finish grade for these areas shall not vary more than 1 inch from the specified grade and cross-section and shall be a smooth uniform surface, free of any abrupt grade changes or depressions. Unless otherwise specified, finish grade below adjacent paving, curbs, or headers shall be 1 inch for lawn and granite areas and 3 inches for planting areas.

Unless otherwise specified, in-place soil will be prepared and conditioned for utilization as topsoil. If imported topsoil is specified or has to be used, the existing soil, before subgrade, shall be scarified to a depth of 6 inches prior to placing the topsoil and the thickness of the topsoil layer shall be at least 6 inches.

All landscape and planting areas, except those intended for lawns, shall be treated with a pre-emergence control, such as “Surflan” or equal, applied in accordance with the manufacturer's recommendations.

430.3 LAWN AREAS:

430.3.1 Preparation of In-Place Soil: After clearing and grubbing has been completed, the existing surface shall be scarified and cultivated to a minimum depth of 8 inches; then brought to finish grade. During the operation, debris, including all stones over 1 inch in any dimensions, shall be removed and disposed of offsite.

After clearing and grubbing and initial cultivation has been completed, chemical fertilizer, 16-20-0 composition, shall be mechanically spread over the entire area at an average rate of 10 pounds per 1000 square feet. After spreading, the fertilizer shall be cultivated into the top six inches of soil using suitable equipment. The resulting soil shall be in a friable condition, suitable for planting.

The Engineer shall inspect and approve these areas prior to seeding.

430.3.2 Seeding: If a Bermuda summer lawn has not been established during its normal planting season, April through September, then rye grass (Solium Multi-folium) seed will be planted.

The rate of seeding shall be 3 1/2 pounds of Bermuda seed or 15 pounds of rye seed per 1000 square feet.

After seeding has been completed, the entire area shall be rolled with a lawn roller for leveling and seed retention. Immediately after rolling, the area shall be watered with a mist type spray until the soil is wet to a depth of 2 inches.

The Contractor shall provide the necessary safeguards to protect the planted areas from damage by erosion or trespass. Any damaged areas or any areas, greater than 6 inches in diameter, which fail to show a good stand shall be repaired and replanted until an acceptable stand of grass is obtained.

430.3.3 Maintenance: The Contractor shall be responsible for maintenance of the lawn areas until they are accepted by the Contracting Agency. This shall include watering, mowing, weeding and removal of all debris.

430.4 DECOMPOSED GRANITE AREA:

Decomposed granite shall be in accordance with Section 795. The Contractor shall confirm that a sufficient quantity is available so that the entire area will be of the same composition and appearance, and shall furnish a sample to the Engineer for approval as to color.

After preliminary grading is completed and the area has been cleared and grubbed, a pre-emergence control, such as Surflan, or equal, shall be applied over the entire area, in accordance with the manufacturer's recommendations. The decomposed granite shall be evenly distributed over the area with a minimum depth of 2 inches. Finish grading will be accomplished and the granite will be lightly watered and then compacted to an extent satisfactory to the Engineer. After compaction, a second treatment with the pre-emergence control will be accomplished.

430.5 TREE, SHRUB, AND GROUND COVER PLANTING:

The species, sizes, the manner in which to be furnished, and the approximate number are as shown in the plant list. The quantities, as listed, are approximate and the Contractor shall furnish and install all plant material necessary to complete the plantings as shown on the landscape plan. Change order adjustment will be made for unit price proposals, but not for lump sum proposals.

430.5.1 Substitutions: All requests for substitutions must be submitted in writing to the Contracting Agency prior to commencement of work on the project. The Contractor shall not take any further action concerning his request until a written approval or denial is received from the Contracting Agency. Plants of kinds other than those indicated on the plant list will be considered by the Contracting Agency only upon submission of proof that the specified plant is not reasonably procurable in the local region. Substitutions will resemble the specified plant in regards to appearance, ultimate height, shape, habit of growth, and general soil requirement.

Substitution of a larger size of the same species may be made by the Contractor without written approval. However, the Contracting Agency will not be responsible for any additional costs incurred by the Contractor, either for the additional cost of the plants or for any additional planting costs.

430.5.2 Plant Inspection Prior to Delivery to the Project Site: Prior to delivery of any species to the project site, the Contractor shall make the necessary arrangement with the Engineer for an inspection of the plant material at the offsite location. Any plants found to be unsuitable in growth or condition or which are not true to name shall be removed and replaced with acceptable plants.

430.5.3 Plant Protection after Delivery to the Project Site: Plants transported to the site shall be planted as soon as possible. During any interim storage period, they shall not be exposed to excessive sun or drying winds. Any stock, that in the opinion of the Engineer has deteriorated due to exposure or has been damaged during transporting, will be removed and replaced at the Contractor's expense.

430.5.4 Plant Location: The Contractor shall stake out the location of planting areas and plantings pit prior to any excavation. Subject to the Engineer's approval, minor relocations may be accomplished at this time to avoid unsuitable conditions, such as utilities, rocky areas, poor soil, etc. If major relocations are necessary, the Engineer will provide revised plans.

430.5.5 Ground Cover Areas: The planting beds shall be brought to finish grade before spreading the fertilizer or conditioning material specified. Fertilizing and conditioning material shall be mechanically spread at a uniform rate over the entire bed area. After spreading, this material shall be uniformly cultivated into the upper 6 inches of soil using suitable equipment. The resulting soil shall be in a friable condition suitable for planting. A pre-emergence control application is required prior to planting.

PART 500

STRUCTURES

Section	Last Revised	Title	Page
505	2014	Concrete Structures	505-1
506	2012	Precast Prestressed Concrete Members	506-1
510	1998	Concrete Block Masonry	510-1
511	1998	Brick Masonry	511-1
515	1998	Steel Structures	515-1
520	2012	Steel and Aluminum Handrails	520-1
525	1998	Pneumatically Placed Mortar	525-1
530	2000	Painting	530-1

This Page Reserved for Future Use

Walkways shall be provided along each side and for the full length of bridge structures outside the deck area. These walkways shall be of sufficient width, and so constructed as to provide for the support of the bridges from which the longitudinal floats specified are to be operated. Inspection walkways and access thereto shall be provided under the deck forms between each pair of girders and outside of each outside girder for the full length of the bridge structure. The walkways shall be not more than 8 feet below the concrete to be inspected.

505.6.1 Construction Joints in Major Structures: The work shall be so prosecuted that construction joints will occur at designated places shown on plans unless specifically permitted otherwise by the Engineer. The Contractor shall complete, by continuous depositing of concrete, section for the work comprised between such joints. The joints shall be kept moist until adjacent concrete is placed.

All construction joints at the bottom of walls or arches, at the top of walls, and all longitudinal construction joints having a keyed, stepped or roughened surface shall be cleaned by sandblasting prior to placing the adjacent concrete. Any quality of sand may be used which will accomplish the desired results.

The sandblasting operations shall be continued until all unsatisfactory concrete, and all laitance, coatings, stains, debris, and other foreign materials are removed. The surface of the concrete shall be washed thoroughly to remove all loose material. The method used in disposing of waste water employed in washing the concrete surfaces shall be such that the waste water will not stain, discolor, or affect exposed surfaces of the structures. The method of disposal will be subject to the approval of the Engineer.

All horizontal construction joints or those on slight slopes, shall be covered with Class D mortar as specified in Section 776.

Expansion and contraction joints in the concrete structures shall be formed where shown on the plans and as directed. In general, such joints shall have smooth abutting surfaces, painted or separated and sealed as detailed on the plans. No reinforcement shall be extended through the joints, except where specifically noted or detailed on the plans. Concrete or mortar shall not be permitted to lap these joints in such a manner as to effect a tie or bond that would later promote spalling.

Asphalt paint or premolded asphalt filler used in joints shall be as specified in Section 729.

No direct payment will be made for furnishing and placing asphaltic paint, premolded asphaltic filler or other types of joint separators; their costs shall be included in the price bid for the item of work of which they are a part.

505.6.2 Adverse Weather Concreting:

(A) Hot Weather Concreting: Hot weather is defined as any combination of high ambient temperature, low relative humidity, and wind velocity which would tend to impair the quality of fresh concrete. These effects become more pronounced as wind velocity increases. Since last minute improvisations are rarely successful, preplanning and coordination of all phases of the work are required to minimize these adverse effects.

As an absolute minimum, the Contractor shall insure that the following measures are taken:

(1) An ample supply of water, hoses, and fog nozzles are available at the site. (2) Spare vibrators are on hand in the ratio of one spare vibrator for each three in use. (3) Preplanning has been accomplished to insure prompt placement, consolidation, finishing, and curing of the concrete. (4) Concrete temperature on arrival should be approximately 60°F. and in any event shall not exceed 90°F. The use of cold water and ice is recommended. (5) The subgrade is moist, but free of standing water. (6) Fog spray is utilized to cool the forms and steel. Under extreme conditions of high ambient temperature, exposure to the direct rays of the sun, low relative humidity, and wind, even strict adherence to these measures may not produce the quality desired and it may be necessary to restrict concrete placement to early morning only. If this decision is made, then particular attention must be directed to the curing process since the concrete will be exposed to severe thermal stresses due to temperature variation; heat of hydration plus midday sun radiation versus nighttime cooling.

(B) Cold Weather Concreting: Concrete shall not be placed on frozen ground, nor shall it be placed when the ambient temperature is below 40°F. unless adequate means are used to heat the aggregate and/or water and satisfactory means have been taken for protecting and heating the concrete during the curing period.

(C) Wet Weather Concreting: Placing of concrete shall be discontinued when the quantity of rainfall is such as to cause a flow or wash to the surface. Any concrete already placed and partially cured shall be covered to prevent dimpling. A construction joint will be installed prior to shut down.

(D) Replacement of Damaged or Defective Concrete: Upon written notice from the Engineer, all concrete which has been damaged or is defective, shall be replaced by the Contractor at no cost to the Contracting Agency.

(E) Recommended Reference:
(1) ACI-305 Hot Weather Concreting
(2) ACI-306 Cold Weather Concreting
(3) ACI-308 Recommended Practices for Curing Concrete

505.6.3 Bridge Deck Joint Assemblies:

505.6.3.1 Description: This work shall consist of furnishing and installing expansion devices including the seals, anchorage system, and hardware in accordance with the project plans and these specifications.

505.6.3.2 Materials: Elastomer Seals shall be of the Compression Seal or Strip Seal type, and shall conform to the requirements of the Arizona Department of Transportation Standard Specifications for Road and Bridge Construction Section 1011-5.

Steel shapes and plates shall conform to the requirements of ASTM A36, or ASTM A588.

505.6.3.3 Construction Requirements:

(1) General: Deck joint assemblies shall consist of elastomer and steel assemblies which are anchored to the concrete at the deck joint. The seal armor shall be cast in the concrete. The completed assembly shall be properly installed in the planned position, shall satisfactorily resist the intrusion of foreign material and water, and shall provide bump-free passage of traffic. For each size of seal on a project, one piece of the seal material supplied shall be at least 18 inches longer than required by the project Plans. The additional length will be removed in the presence of the Engineer and used for materials testing. Certificates of Compliance conforming to the requirements of Section 106.2 shall also be submitted by the Contractor.

(2) Shop Drawings**:** Prior to fabrication, the Contractor shall submit shop drawings to the Engineer for approval, in accordance with the requirements of Section 105.2. The shop drawings shall show complete details of the method of installation to be followed, including a temperature correction chart for adjusting the dimensions of the joint according to the ambient temperature, and any additions or rearrangements of the reinforcing steel from that shown on the project plans.

(3) Elastomer Seals: Seals shall conform to the requirements specified.

(4) Armor: All steel for cast-in-place deck joint assemblies shall conform to the requirements specified.

(5) Galvanizing**:** All steel parts of strip seal assemblies shall be galvanized after fabrication, in accordance with the requirements of ASTM A123 and A153, unless ASTM A588 steel is used. Bolts shall be high strength, conforming to the requirements of ASTM A325M, with a protective coating of zinc, followed by a chromate and baked organic coating conforming to the requirements of ASTM F1135, Grade 3, 5, 6, 7, or 8 and Color Code A.

Steel parts of compression seal assemblies do not require galvanizing, plating, or painting.

(6) Joint Preparation and Installation: At all joint locations, the Contractor shall cast the bridge decks and abutment backwalls with a formed blockout, sized to accommodate the pre-assembled joint assembly. The joint assembly will be anchored in the concrete to be placed with the secondary pour in the blockout. Prior to the secondary pour, the surface of the existing concrete in the blockout shall be coated with an approved adhesive specifically formulated for bonding new concrete to old concrete.

(7) Welding: All welding and inspection of welding for structural steel shall be performed in accordance with the requirements of the latest revision of the AASHTO/AWS D1.5M/D1.5 Bridge Welding Code. The use of electro-slag welding process on structural steel will not be permitted.

PART 600

WATER, SEWER, STORM DRAIN AND IRRIGATION

Section	Last Revised	Title	Page
601	2012	Trench Excavation, Backfilling and Compaction	601-1
602	2014	Trenchless Installation of Steel Casing	602-1
603	2012	Installation for High Density Polyethylene Pipe	603-1
604	2012	Placement of Controlled Low Strength Material	604-1
605	2014	Subdrainage	605-1
610	2014	Water Line Construction	610-1
611	2011	Disinfecting Water Mains	611-1
615	2007	Sewer Line Construction	615-1
616	2002	Reclaimed Water Line Construction	616-1
618	2011	Storm Drain Construction	618-1
620	2012	Cast-In-Place Concrete Pipe	620-1
621	1998	Corrugated Metal Pipe and Arches	621-1
625	2012	Manhole Construction and Drop Sewer Connections	625-1
630	2012	Tapping Sleeves, Valves and Valve Boxes on Water Lines	630-1
631	2012	Water Taps and Meter Service Connections	631-1

This Page Reserved for Future Use

601.6 PAVEMENT REPLACEMENT AND SURFACE RESTORATION:

601.6.1 Grading: The Contractor shall do such grading in the area adjacent to backfilled trenches and structures as may be necessary to leave the area in a neat and satisfactory condition approved by the Engineer.

601.6.2 Restoring Surface: All streets, alleys, driveways, sidewalks, curbs, or other surfaces, in which the surface is broken into or damaged by the installation of the new work, shall be resurfaced in kind or as specified to the satisfaction of the Engineer in accordance with Section 336.

601.6.3 Cleanup: The job site shall be left in a neat and acceptable condition. Excess soil, concrete, etc., shall be removed from the premises.

601.6.4 Temporary Pavement: The Contractor shall install temporary asphalt pavement or the first course of permanent pavement replacement in accordance with Section 336 immediately following backfilling and compaction of trenches that have been cut through existing pavement. Except as otherwise provided in Section 336, this preliminary pavement shall be maintained in a safe and reasonably smooth condition until required backfill compaction is obtained and final pavement replacement is ordered by the Engineer. Temporary paving removed shall be hauled from the job site and disposed of by the Contractor at no additional cost to the Contracting Agency.

601.7 PAYMENT:

No pay item will be included in the proposal, nor direct payment made for trench excavation, backfilling, compaction, or placement of temporary pavement. The cost of these features of the work shall be included in the unit price per linear foot for furnishing and laying pipe.

- End of Section -

SECTION 602

TRENCHLESS INSTALLATION OF STEEL CASING

602.1 DESCRIPTION:

The Contractor shall furnish all labor, material and equipment as required for the trenchless operation to install steel casing using horizontal earth auger boring, hand tunneling or pipe ramming.

602.2 MATERIALS:

The steel casing shall consist of steel plates rolled and welded into a cylinder. Plate material shall meet the minimum requirements of ASTM A283. Shop and field joints shall be butt welded in accordance with the minimum requirements of American Welding Society (AWS) D1.1/D1.1M. Welding shall be performed by AWS D1.1 certified personnel.

The steel casing for pressurized carrier pipes shall be a minimum of 12-inches larger than the largest OD of the carrier line including pipe bells and flanges or the size indicated on the plans, whichever is greater.

The steel casing for gravity carrier pipes shall be a minimum of 18-inches larger than the largest OD of the carrier line including pipe bells and flanges or the size indicated on the plans, whichever is greater.

602.3 TRENCHLESS OPERATION:

Before starting operations, the Contractor shall submit in accordance with Section 105.2, detailed shop drawings of the bore pit and receiving pit shoring, the casing, bulkheads, carrier pipe installation method, and welder certifications.

The bore and reception pits for the trenchless operation shall be shored to safeguard existing sub-structures and surface improvements and to protect against ground movement.

On steel casing 37-inches (ID) or larger, grout connections shall be provided at a maximum spacing of every 20-feet located at 12 o'clock in the steel casing. Upon completion of the boring operation, the contractor shall inspect each grout hole to determine if grouting is required. Any void greater than 2 inches outside the casing will require the boring contractor to grout fill the void. After grouting, the grout holes shall be closed with a threaded plug.

Steel casing smaller than 36-inches (OD) installed by horizontal earth auger boring, hand tunneling or pipe ramming will not require outside grouting unless caving or earth movement occurs.

602.4 DEWATERING:

All water encountered during the trenchless operation shall be disposed of by the Contractor in a manner that will not damage public or private property or create a nuisance or health problem. The cost of furnishing pumps, pipes and equipment for dewatering shall be considered incidental to the work and no additional payment shall be made.

602.5 CARRIER PIPE PLACEMENT:

The tolerances allowed for the alignment and grade of carrier pipe shall comply with requirements of Section 610, 615 or 618 as applicable. The Contractor shall be responsible to obtain the required line and grade for the carrier pipe. The carrier pipe shall not contact or rest on the casing.

Pressurized carrier pipes, (i.e. water, gas, force main) shall be placed using casing spacers, wood skids or steel pipes for rails. Casing spacers shall be installed 3 per joint minimum with 8-foot maximum spacing. The annular space between the casing and carrier line shall be left empty unless otherwise directed. When the annular space is to be filled, 3/8-inch pea gravel shall be used.

Gravity carrier pipes, (i.e. sewer, storm drain, irrigation) shall be placed using wood skids or steel pipes for rails. The annular space between the casing and carrier line shall be left empty unless otherwise directed. When the annular space is to be filled, 3/8-inch pea gravel shall be used.

Bulkheads consisting of brick and mortar or concrete shall be constructed on the ends of the casing; bulkheads shall be a minimum of 8-inches thick. Alternative casing end closures may be substituted for brick and mortar or concrete bulkheads if approved by the engineer.

PVC conduits for dry utilities, (i.e. communications, fiber, electric) shall be placed using non-metallic PVC casing spacers. The annular space between the casing and carrier line shall be filled as indicated in the contract documents.

After completing the carrier pipe installation, the Contractor shall remove all loose and disturbed material in the bore pits and backfill the pits in accordance with Sections 601 and 336.

602.6 MEASUREMENT AND PAYMENT:

Measurement for steel casing shall be the number of horizontal linear feet from the end of casing in the bore pit to the end of casing in the reception pit. Payment for steel casing shall be full compensation for furnishing all labor, material, tools, and equipment required for the trenchless installation of steel casing, complete in place including but not limited to carrier pipe and bulkhead placement and the excavation and backfilling of pits.

- End of Section -

SECTION 603

INSTALLATION FOR HIGH DENSITY POLYETHYLENE PIPE

603.1 DESCRIPTION:

The work covered by this specification consists of furnishing all plant, labor, equipment, appliances and materials and performing all operations in connection with a large-diameter High Density Polyethylene (HDPE) pipe installation in accordance with the plans, specifications and special provisions.

For installation procedures of HDPE for sewer line construction, see Section 615.

For installation procedures of HDPE for storm drain construction, see Section 618.

HDPE pipe and fittings shall conform to Section 738.

This section covers large-diameter HDPE pipeline installations of gravity and low-pressure storm drain and sanitary sewer construction.

For the purpose of this specification, low-pressure is defined as the test pressures of 3.5 psi of air or 4 feet of water as specified in Section 615.11.

For the purpose of this specification, large-diameter HDPE pipe shall include 8 inches through 120 inches nominal diameter.

603.2 EXCAVATION:

Excavation shall comply with Subsection 601.2. Trench widths shall comply with Subsection 601.2.2, Table 601-1 and Note (1) for HDPE pipe, meeting AASHTO M-252, and AASHTO M-294. Trench widths for profile HDPE pipe, meeting ASTM F894, will be designed by the Engineer and included on the plans or in the special provisions.

603.3 PROTECTION OF EXISTING UTILITIES:

Protection of existing utilities shall comply with Subsection 601.3.

603.4 FOUNDATION, BEDDING, BACKFILLING AND COMPACTION:

603.4.1 Foundation: Foundation shall comply with Subsection 601.4.1.

603.4.2 Bedding: Coarse aggregate shall be used for bedding of large-diameter profile HDPE pipe. Coarse aggregate shall be in accordance with Subsection 603.4.6, for size, type, and gradation. For corrugated HDPE pipe as defined under Section 738, bedding shall meet the requirements of subsection 601.4.2 and Table 601-2 with the compaction requirements stipulated below.

Bedding material shall be carefully deposited in 8 inches or less loose lifts, thoroughly and carefully compacted around the pipe, equally around both sides of the pipe, with approved vibratory compactors or other tools or equipment when applicable, or by shovel slicing as approved by the Engineer. This shall be repeated until enough material is placed and compacted to provide a minimum of one (1) foot cover over the top of profile HDPE pipe, or to the top of corrugated HDPE pipe. Compaction densities, as well as further compaction requirements shall be as stipulated in Table 601-2, unless shown otherwise on the plans.

603.4.3 Backfilling: Backfilling shall comply with Subsection 601.4.3.

603.4.4 Compaction Densities: Compaction densities shall comply with Subsection 601.4.4.

603.4.5 Compaction Methods: For large-diameter HDPE pipe installations where the backfill and bedding material is coarse aggregate, mechanical compaction shall be the only method for consolidating backfill and bedding. Water consolidation shall not be used as a method of compaction for coarse aggregate whether used as a foundation, bedding or backfill material.

Generally, CLSM does not resist freezing and thawing and in some cases may propagate the condition. CLSM mixes must be modified where long term freeze-thaw durability is indicated as a concern. The mix design shall have an air content of no less than six percent by volume, when tested in accordance with ASTM C6023.

604.4 PERFORMANCE TESTING:

CLSM placed within the traveled way or otherwise to be covered by paving or embankment materials, shall not be covered until one of the following performance criteria have been met:

(A) When a person of average weight and shoe size can walk on the surface of the CLSM without creating greater than 1/8-inch indents in the material, or
(B) When the in-place CLSM has reached a strength of 30 psi, when tested in accordance with ASTM D4832, or
(C) When a ball drop indentation of 3-inches or less is obtained, when tested in accordance with ASTM D6024, or
(D) When a penetration resistance reading of 650 is achieved, when tested in accordance with ASTM C403.

Additionally, CLSM shall not be covered if proof rolling by pneumatic-tired or steel wheel vibratory roller results in the bringing of free water to the surface or results in surface undulation (pumping).

When CLSM is placed in foundation excavations, the material shall be protected from foundation loading and placement of foundation concrete prior to having reached initial set per ASTM C403, or allowed to set in place for 24 hours, whichever occurs first.

604.5 ACCEPTANCE:

CLSM shall be considered deficient and may be rejected at the discretion of the Engineer if:

(A) The CLSM is outside of the limits specified in Table 728-1 and/or
(B) The aggregate gradation is outside the limits specified in Section 728.2.

Rejected material not placed shall be immediately removed from the job site. Rejected material placed shall be removed and replaced with acceptable material. Removing and disposing of the rejected material shall be at no additional cost to the Contracting Agency.

604.6 PAYMENT:

No pay item will be included in the proposal nor direct payment made for CLSM unless specifically included in the Project Specifications and Fee Proposal. The cost for placing the material shall be included in the unit price for the specific work function (laying pipe, placing structure foundation, construction retaining wall, etc.).

- End of Section -

SECTION 605

SUBDRAINAGE

605.1 DESCRIPTION:

The subdrainage system shall be constructed in accordance with the notes and details shown on the plans and the applicable provisions of these specifications except as modified in the special provisions.

605.2 CONCRETE:

All concrete placed in drainage structures, subdrain outlets, pipe collars, and similar features of the subdrainage system shall conform to the applicable provisions of Section 725.

605.3 SUBDRAINAGE PIPE:

Subdrainage pipe, both perforated and non-perforated, shall be either bell and spigot concrete, bell and spigot vitrified clay, or corrugated metal pipe, as shown on the plans or specified in the special provisions. However, if the particular kind of pipe is not shown on the plans nor specified in the special provisions, subdrainage pipe shall be concrete pipe of at least standard strength quality and shall conform to the requirements of Section 736. Vitrified clay pipe shall conform to the requirements of Section 743. Corrugated metal pipe shall conform to the requirements of Section 760.

605.3.1 Pipe Joints: Unless the pipe joints are of a self-aligning type, have the bottom half of the bell joint filled with mortar to securely hold the pipe in alignment and to bring the inner surface of abutting pipes flush and even. Where a tight joint for non-perforated pipe is required, the bell joint shall be completely filled with mortar.

605.4 SUBDRAINAGE MANHOLES:

Subdrainage manholes, including inlets, outlets, flap gates, gate boxes, and drop steps, shall comply with the requirements of the plans and the special provisions.

605.5 FILTER MATERIALS:

The filter materials shall be placed within the limits shown on the plans. The compositions of the filter materials shall each conform to one of the grading requirements in Table 605-1; the particular requirement to be used will be specified in the special provision.

The materials used shall conform to requirements for concrete aggregates in Section 725.3; however, the requirements for grading, and reactivity, as stated therein, shall not apply. The minimum bulk specific gravity shall be 2.50, by ASTM C127.

TABLE 605-1

FILTER MATERIAL GRADING - % PASSING

Screen or Sieve Size	TYPE		
	F1	F2	F3
3/4”		100	100
3/8”	100	80 - 100	70 - 100
No. 4	90 – 100	60 – 85	45 - 75
No. 8	75 – 90	45 – 70	30 – 60
No. 16	55 – 80	30 – 55	20 – 45
No. 30	30 – 60	15 – 40	10 – 30
No. 50	10 – 40	5 – 20	0 - 15
No. 100	0 – 15	0 – 10	0 - 5
No. 200	0 - 5	0 - 5	

SECTION 610

WATER LINE CONSTRUCTION

610.1 DESCRIPTION:

The construction of all water lines shall conform to applicable standard specifications and details, except as otherwise required on the plans or as modified in the special provisions.

610.2 GENERAL:

All pipes shall be delivered, handled and installed in accordance with the manufacturer's recommendations and/or applicable provisions of AWWA standards for installation of the various types of water mains specified, insofar as such recommendations and provisions are not in variance with the standard specifications and details.

Where water lines are to be constructed in new subdivisions or in conjunction with street repaving projects, the streets shall be pre-graded to within 6 inches of the new street subgrade prior to trenching or cut stakes shall be set for trenching.

610.3 MATERIALS:

All pipes for water lines shall be of the classes shown on the plans or as specified below.

(A) The 4-inch through 16-inch diameter pipe sizes may be PVC C900 or ductile iron, except where a particular material is specified by the agency or the contract documents. All pipes shall be minimum 150 psi design unless otherwise specified.

(B) Pipe 16 inches and larger may be either ductile iron, or concrete pressure pipe-steel cylinder type.

Ductile iron water pipe and fittings per: Section 750. Concrete pressure pipe-steel cylinder type per: Section 758. C900 PVC per: AWWA C900-07.

Service material containing brass or bronze must comply with the current NSF 61-8 standards at the time the project begins.

All brass or bronze service material must meet the current AWWA C-800 standards.

Any product used in water line construction containing brass or bronze that comes in contact with potable water shall meet the current NSF standards and federal law.

610.4 CONSTRUCTION METHODS:

All water mains in major streets shall have a minimum cover of 48 inches over the top of the pipe. Water mains in other locations shall have a minimum cover over the top of the pipe as follows:

(A) 36 inches for mains smaller than 12 inches.

(B) 48 inches for mains 12 inches and larger.

Cover for water mains will be measured from existing or proposed finished grade of pavement or from natural ground, whichever is deeper.

No water main shall be deflected, either vertically or horizontally, in excess of that recommended by the manufacturer of the pipe or coupling, without the appropriate use of bends or offsets.

If adjustment of the position of a length of pipe is required after it has been laid, it shall be removed and rejoined as for a new pipe.

Every precaution shall be taken to prevent foreign material from entering the pipe. When on the project site, the ends of the pipe section shall be plugged, wrapped or tarped at all times when pipe laying is not in progress, which includes storage and staging at the site. The pipe shall be stored on a pallet, blocking or other means to prevent foreign materials from entering the

pipe. The pipe line shall be protected by a water-tight plug or other means approved by the Engineer when the pipe is in the trench if pipe laying is not in progress.

Where restrained joints are specified on mains sixteen (16) inches in diameter and smaller, ductile iron pipe shall be used with an approved joint restraint method.

On mains sixteen (16) inches in diameter and larger where plans specify welding joints and where ductile iron pipe is furnished, joints shall be restrained by an approved joint restraint method for the distance specified.

Except as otherwise required in this specification, the special provisions, or by the Engineer, trench excavation, backfilling and compaction shall be in accordance with the requirements of Section 601. Backfilling may be accomplished as soon as the pipe line has been installed to the satisfaction of the Engineer, subject to the requirements for testing, as contained below.

Hydrostatic testing shall be in accordance with this specification.

All corporation stops used for testing and chlorination shall be left in the pipe line with the stop closed and all connecting pipe removed.

Curb stops with flushing pipes or fire hydrants shall be installed at the ends of dead-end mains according to standard details. Thrust blocks shall be installed in accordance with this specification.

Valve boxes and covers shall be according to standard details.

Ductile iron pipe shall be installed in accordance with this specification and pipe and fittings shall be in accordance with Section 750.

PVC C-900 pipe shall be installed in accordance with AWWA C900 and Section 601.

610.5 SEPARATION:

610.5.1 General: Water lines and sewer lines shall be separated to protect water lines from contamination by sewer lines.

The angle of a water line and sewer line crossing shall be limited to between (45) forty-five degrees and (90) ninety degrees. Intersection angles of less than (45) forty-five degrees shall not be allowed.

Separation distances are measured from the outside diameter of the water or sewer line, or the centerline of a manhole.

When water and sewer lines cannot meet separation requirements, extra protection is required as described in Subsection 610.5.5 and shown in Standard Details 404-1, 404-2 and 404-3.

Extra protection requirements for line crossings are measured from the closest outside surfaces of the sewer and water line.

Water line service connections to individual building supply and distribution plumbing shall not be placed below sewer lines, and shall otherwise comply with the separation requirements of the applicable plumbing code as applied by the Agency (Administrative Authority). Methods described for extra protection do not apply to these service lines.

Water and sewer lines shall not be constructed parallel within a common trench.

610.5.2 Water Line Separation from Gravity Sewer Lines: Water lines shall not be placed within two (2) feet horizontal and one (1) foot vertical above and two (2) feet vertical below gravity sewer lines.

Extra protection is required where a water line is placed within six (6) feet horizontal and two (2) feet vertical above a gravity sewer line.

Extra protection is required where a water line is placed within six (6) feet horizontal and any distance below a gravity sewer line.

610.5.3 Water Line Separation from Pressurized Sewer Lines: Water lines shall not be placed within six (6) feet horizontal and within two (2) feet vertical below or within two (2) vertical above a pressurized sewer line.

Extra protection is required where a water line is placed within six (6) feet horizontal and within six (6) feet vertical above a pressurized sewer line.

Extra protection is required where a water line is placed within (6) feet horizontal and any distance below a pressurized sewer line.

610.5.4 Water Line Separation from Manholes: Water lines shall not pass through or come into contact with any part of a sewer manhole and shall be separated six (6) feet horizontal from the center of a sewer manhole.

610.5.5 Extra Protection: New water lines that require extra protection from new sewer lines, shall have extra protection provided by using ductile iron pipe for both lines. Lines of standard pipe length shall be centered at the point of crossing so that no joints exist within six (feet) horizontal and only restrained or mechanical joints exist within ten (10) feet horizontal.

New water lines that require extra protection from sewer lines, shall have identification wrap and/or tape installed on the water and sewer lines for the length that requires extra protection for each line.

New water lines that require extra protection from existing sewer lines shall be constructed using the extra protection specified for new water lines, and the existing sewer line:

(1) shall be reconstructed using a standard length of ductile iron pipe centered at the point of crossing so that no joints exist within six (6) feet horizontal and only restrained or mechanical joints exist within ten (10) feet horizontal, or

(2) shall be encased in 6 inches of concrete for the horizontal distance of the line that requires extra protection but for a distance no less than ten (10) feet horizontal.

Existing water lines that require extra protection from new sewer lines shall provide for extra protection by:

(1) constructing the new sewer line and reconstructing the existing water line using ductile iron pipe for both lines with standard pipe lengths centered at the point of crossing so that no joints exist within six (feet) horizontal and restrained or mechanical joints exist within ten (10) feet horizontal, or

(2) encasement of both the existing water line and the new sewer line in six (6) inches of concrete for the horizontal distance of the lines that require extra protection but for a distance no less than ten (10) feet horizontal.

(3) Extra protection for existing ductile iron water lines can be met by the installation of restrained or mechanical joints on the existing water line within ten (10) feet horizontal of the crossing and either

(a) construction of new sewer line using a standard pipe length of ductile iron pipe centered at the point of crossing so that no joints exist within six (6) feet horizontal and restrained or mechanical joints exist within ten (10) feet horizontal, or

(b) encasement of the new sewer line in 6 inches of concrete for the horizontal distance of the line that requires extra protection but for a distance no less than ten (10) feet horizontal.

610.6 POLYETHYLENE CORROSION PROTECTION

610.6.1 General: Where called for in the plans and specifications or directed by the Engineer, pipe, valves and fittings shall be protected from corrosion by encasement in a polyethylene protective wrapping referred to hereafter as polywrap. Although not intended to be a completely air and water tight enclosure the polywrap shall provide a continuous barrier between the pipe and surrounding bedding and backfill.

610.6.2 Materials: The polywrap shall be of virgin polyethylene, not less than 8 *mils* in thickness, formed into tubes or sheets as may be required. Naturally pigmented material may be used where exposure to ultraviolet light will be less than 48 hours.

Otherwise the material shall be pigmented with 2 to 2 1/2 percent of well dispersed carbon black with stabilizers.

The polywrap shall be secured as specified below with 2-inch wide pressure sensitive tape not less than 10 mils thick. This flexible tape shall consist of a polyethylene or polyvinyl chloride backing with a synthetic elastomeric adhesive film comprised of butyl rubber. Tape shall remain flexible over a wide range of temperatures, with tensile strength and elongation properties in conformance with ASTM D1000.

The minimum tube size for each pipe diameter shall be per Table 610-1.

TABLE 610-1
POLYWRAP FLAT TUBE WIDTHS

Nominal Pipe Diameter (Inches)	Cast Iron Or Ductile Iron With Push-On Joints (inches)	Cast Iron or Ductile Iron With Mechanical Joints (inches)
4	14	16
6	17	20
8	21	24
10	25	27
12	29	30
14	33	34
16	37	37
18	41	41
20	45	45
24	53	53

610.6.3 Installation: The polyethylene tubing shall be cut into lengths approximately 2 feet longer than the pipe sections. With the pipe suspended from the center the tube shall be slipped over the spigot end and bunched up between the point of support and the spigot end. After the pipe is installed into the bell of the adjacent pipe the pipe shall be lowered to the trench bottom and the supporting sling removed from the center of the pipe. The pipe shall then be raised at the bell end enough to allow the tube to be slipped along the full length of the barrel with enough left at each end to overlap the adjoining pipe about 1 foot. A shallow bell hole must be made at each joint to facilitate installation of the polywrap.

Pull the bunched-up polywrap from the preceding length of pipe, slip it over the end of the new length of pipe, and secure in place with one circumferential turn of tape plus enough overlap to assure firm adhesion. Then slip the end of the polywrap from the new pipe section over the end of the first wrap until it overlaps the joint at the end of the preceding length of pipe. Tape it in place.

The loose wrapping on the barrel of the pipe shall be pulled snugly around the barrel of the pipe, and excess material folded over the top of the pipe and the folds held in place by means of short strips of adhesive tape, at about 3 foot intervals along the pipe.

Repair any rips, punctures or other damage to the tube with the adhesive tape or pieces of tube material secured with tape.

Bends and reducers in the line shall be covered with polyethylene in the same manner as pipe.

Valves, tees, crosses and outlets shall be wrapped with flat sheets of the same material. The sheets shall be passed under valves and brought up around the body to the stem. Edges shall be brought together, folded twice and secured with the adhesive tape.

610.6.4 Payment: Payment for this item shall be per the provisions of Subsections 109.4 and 109.5 of the specifications unless this item is specifically called for on the plans or in the supplemental specifications or special provisions as a specific component and pay item for a given project.

610.7 VALVES:

Valves shall be installed in accordance with AWWA C-600 or AWWA C-603 modified as follows:

All tapping sleeves, gate valves, butterfly valves, air release and vacuum valves and corporation stops shall be in accordance with Section 630.

Just before installation in the trench, valves shall be fully opened and closed to check the action, and a record made of the number of turns required to fully open or close the valve. For valves 16 inches and larger, a member of the water utility shall be present to check the action and record the number of turns. The inside of all valves shall then be thoroughly cleaned and the valve installed.

Valves 12 inches and smaller in size shall be supported by concrete blocks, in accordance with the standard details.

Valves 16 inches and larger in size along with their bypass valves, shall be supported on concrete slabs, and/or concrete piers, as indicated on the plans.

Concrete supports shall be provided under valves in vaults and manholes, and shall be constructed an inch low, then grouted with non-shrink grout. Adjustable pipe supports shall be as indicated on the plans. Buried valves shall be supported on concrete blocks as detailed on the plans.

Valve boxes shall be installed over all buried valves in accordance with standard details.

Standard couplings or matching joints shall be used when more than one length of pipe is required, or when two or more pieces are joined, to form the valve box riser. Install extension stems on all valves where the operating nut is 5 feet or more below grade.

610.8 MANHOLES AND VAULTS:

Construction shall consist of furnishing all materials and constructing manholes or vaults complete in place, as detailed, including foundation walls, cast iron steps, frames, covers, and any incidentals thereto, at location shown on the plans.

Manholes shall be constructed to conform with the requirements of Section 625 and standard details, except the inside diameter shall be 60 inches.

Vaults shall be constructed of reinforced concrete conforming to Section 725 and of concrete pipe conforming to ASTM C76 Wall A or B. Vaults shall be kept moist for 7 days before backfilling.

610.9 FIRE HYDRANTS:

The Contractor shall furnish all labor, materials, and equipment necessary to install fire hydrants complete in place at locations shown on the plans in accordance with the standard details and special provisions. Fire hydrants furnished by the Contractor shall conform to the requirements of Section 756.

If paint is chipped, scuffed, or otherwise damaged during handling and installation, the Contractor shall touch up such spots as may be designated by the Engineer.

All hydrants must be flushed and left in good working condition with the control valve open.

610.10 CONNECTION TO EXISTING MAINS:

Existing pipe to which connections are to be made shall be exposed by the Contractor as directed by the Engineer, to permit field changes in line, grade or fittings, if necessary.

All connections to existing mains shall be constructed according to the plans.

Valves connecting new work to the existing system shall be kept closed at all times.

Only Agency personnel shall operate existing valves. The Contractor shall not operate valves in the existing system.

After disinfected samples have been taken and the new work passes the bacteriological tests, the new line shall then be turned over to the Contracting Agency with all branch lines and tie-in valves closed.

When shutdown of an existing water main is necessary in order to connect to the new lines, the Contractor shall make application and pay the required charges to the Contracting Agency. A conference between the Contractor's representative, Engineering Inspection, and Water Distribution personnel shall establish the time and procedures to insure that the shutdown will be for the shortest possible time. If necessary to minimize inconvenience to customers, shutdowns may be scheduled during other than normal working hours. The water supply to some customers, such as hospitals, cannot be shut off at any time. Provisions to furnish a continuous supply of water to such establishments will be required. After the procedures and time for a shutdown are agreed upon, it shall be the Contractor's responsibility to notify all customers in advance that the water will be turned off. When possible, customers shall be notified 24 hours in advance and in no case, except in emergency, shall notification be less than 30 minutes. Notification shall be in writing, giving the reason for the shutdown and the time and duration the water service will be shut off.

The Contracting Agency will close existing valves, but will not guarantee a bone-dry shutdown.

610.11 METER SERVICE CONNECTIONS:

All new meters must be installed by the Contracting Agency after the proper application as required by Code with fees paid at prevailing rates.

When plans call for connections from a new water main to an existing water meter, the work shall include new copper pipe and fittings except as follows:

(A) Wrapped galvanized pipe shall be used to connect or extend existing galvanized service pipe. Type K soft copper pipe or tubing shall be used to connect or extend existing copper service pipe except when otherwise called for in the plans.

(B) When the existing main is not abandoned, and the existing meter is to be connected to the new line, the corporation stop at the old main shall be closed and the abandoned service line cut 6 inches from the old main.

(C) Taps and service connections to the new main shall be made prior to testing and disinfection of the new line.

(D) Meter service piping may be installed by drilling in place of open cut construction when approved by the Engineer.

When called for on the plans, the meter and box shall be relocated by the Contractor as directed by the Engineer. Existing meters which are shown on the plans to be relocated shall be located and installed in accordance with standard details.

Water meter boxes which are broken during construction shall be replaced by the Contractor at no additional cost to the Contracting Agency. Existing meter boxes which are already broken prior to start of construction shall be replaced by the Contractor with boxes furnished by the Contracting Agency. Boxes may be picked up by the Contractor after written authorization is received from the Engineer. The written authorization shall include the street address of each broken meter box and the size of meter box required. All water meter boxes shall conform to the standard details.

610.12 FIRE LINE SERVICE CONNECTIONS:

Fire line service connections shall be installed in accordance with standard details.

The fire line from the control valves at the main to the detector check valve shall be constructed of ductile iron pipe per Section 750.

610.13 COUPLINGS, JOINTS, GASKETS AND FLANGES:

(A) Couplings: The couplings used to join the pipe to flanged valve adapters shall have a minimum working pressure of 150 psi, and shall have a fusion-bonded epoxy finish. The coupling sleeves shall be carbon steel with a minimum yield of 30,000 psi. The flanges shall have a minimum yield of 30,000 psi and be ductile iron or carbon steel for sizes up to 12", or high-strength, low-alloy steel for sizes 14" and larger.

(B) Joints: The joints and fitting shall conform to Sections 750 and 752.

(C) Bolts and Nuts:

(1) Bolts, studs, and nuts used in underground field flanged connections or for connecting fittings shall be carbon steel compliant with ASTM A307, Grade A unless Grade B is specified. Bolts, studs, and nuts shall be in accordance with AWWA C111. Bolts and studs shall have Class 2A thread tolerance with the corresponding nuts having Class 2B tolerance. Bolts, studs and nuts shall have a hot-dipped zinc coating in accordance with ASTM F2329. All bolt diameters shall normally be 1/8 inch smaller than the bolt hole diameter. If specified, allowable exceptions to zinc coating shall be bolts, studs, and nuts made from 316 stainless steel per ASTM F593 or cadmium plated per ASTM B766. All bolts shall be hexagonal heads.

(2) The minimum requirement for underground mechanical joint connections using T-head bolts shall meet the requirements of AWWA C111 using a high strength low alloy steel manufactured for atmospheric corrosion resistance per ASTM A242.

These bolted joints shall be protected as follows: Following installation and before backfilling, all couplings, steel flanges, bolts, nuts, anchor bolts and rods, bolting of all flanged valves, and all exposed steel shall be protected from corrosion by either of the two methods outlined below at the Contractor's option.

(A) Below ground installations shall be coated with NO-OX-ID "A" with a film of not less than 1/32 inch thick and then coated with cement mortar not less than 1 inch thickness before backfilling. Cement mortar shall be composed of 1 part cement, ASTM C150, Type II, low alkali, to 3 parts sand. Before application of the cement mortar coating the area to be protected shall be covered with a layer of 2 x 2 inch No. 14 gage welded wire fabric, firmly wired in place.

(B) Below ground installations shall be protected by the application of hot coal-tar enamel. The coal-tar enamel shall be in accordance with AWWA C-203 and shall be applied to the top part of the pipe or fittings by daubers for at least 2 coats for a total minimum thickness of 1/16 inch. The coal-tar for under side of the pipe flanges or fittings shall be applied by the pan or cocoon method as described below and in AWWA Manual M-11, Steel Pipe.

Pan Method: The coating pan is securely anchored in place on the underside of the pipe and straddling the connection to be coated. The pan shall be wide enough so that the entire connection will be coated.

Hot coal-tar enamel is poured into the pan, from one side only, until the pan is completely filled. The drain plug or valve, is then opened and the excess coal-tar drained out. The pan can then be removed. Details of the coating pan and corresponding dimensions are given in AWWA Manual M-11.

The upper portion of the connection, and all remaining exposed steel pipe, will then be coated by the use of a dauber. The coal-tar coating shall be applied in at least 2 coats for a minimum thickness of 1/16 inch. The daubers and method of application shall conform to AWWA C-203. No thinning will be allowed.

(C) Cocoon Method: The cocoon is formed by placing glass fiber cloth or roofing paper, of the proper width, around the underside of the connection and adjacent exposed steel pipe. The edges of the cocoon shall be securely fastened to the pipe. Backfill is lightly placed to the spring line, and the top of the cocoon is opened and layed back on the filled area and hot coal-tar enamel poured, from one side only, until the cocoon is completely filled. The loose backfill prevents rupture of the cocoon. The upper portion of the connection and remaining exposed steel pipe shall be coated as above.

(D) Gaskets: Except as otherwise provided, all gaskets for pipe lines shall be one piece full faced gaskets from one-ply cloth inserted SBR rubber material. Gaskets for flanges 20 inches and smaller shall be from 1/16 inch thick material. Gaskets for

flanges 24 inches and larger shall be from 1/8 inch thick material. Gasket material shall be J-M 109 as manufactured by Johns-Manville Corporation or an approved equal. Physical characteristics of the rubber compound shall meet ASTM D2000, Class 4AA805A13.

(E) Flanges: Cast iron flanges shall conform to AWWA C-110 as to material, diameter, thickness, drilling, etc. Steel flanges shall be ring or hub type, and shall conform to AWWA C-207, Class D. All flanges shall be drilled and have flange diameters and bolt circles conforming to AWWA C-110, except bolt holes will be 1/8 inch larger than the bolts given for the various sizes. All bolts shall be as specified above and all flanges shall have a flat facing.

610.14 BLOCKING:

All pipe lines, valves and fittings 16 inches and smaller in diameter shall be blocked with concrete thrust blocks in accordance with standard details. Thrust block areas for pipe, valves and fittings larger than 16 inches in diameter shall be calculated for each size pipe, valve and fitting to be installed and shown on the plans.

Thrust block areas shall be calculated on the basis of 200 psi test pressure bearing against undisturbed 3,000 psf soil.

If soil or pressure conditions other than those stated above are encountered, the thrust block areas shall be calculated and submitted for approval. The areas stipulated in the standard details are minimum and shall not be decreased.

When restrained/welded joints are specified to resist thrust forces, blocking is not required.

With the Engineers approval, restrained/welded joints may be used in lieu of thrust blocks to resist thrust forces.

610.15 HYDROSTATIC TESTING:

Water lines, including all fittings and connections to the water mains shall be tested for watertightness by subjecting each section to hydrostatic testing in accordance with applicable provisions of AWWA C-600, except as modified below, and shall consist of pressure testing and allowance testing.

The test section shall be slowly filled with potable water and all air shall be vented from the line. The rate of filling shall be as determined by the Superintendent of Water Distribution, with at least 24 hour notice required before tests are scheduled.

The Contractor shall provide all vents, piping, plugs, bulkheads, valves, bracing, blocking, pumps, and measuring devices and all other equipment necessary for making the tests, including pressure gages, and shall pay the Contracting Agency for water used in the tests.

Hydrostatic Testing: Pressure testing may be made before or after backfilling, but backfilling must be completed before allowance testing. If the pipe is center-loaded, a visual inspection for leaks may be made along the pipe line while the test section is under test pressure, and all visible leaks repaired. However, if mechanical compaction is to be used in the backfilling operations as spelled out in AWWA C-600, the tests shall not be made until the backfilling is completed and compacted. Backfill and compaction for the full distance encompassed by restrained/welded joints shall be completed prior to testing. All connections, blowoffs, hydrants and valves shall be tested with the main as far as is practicable. Hydrostatic testing shall not begin until the pipe has been filled with water for at least 24 hours to allow for air venting.

(A) Pressure Testing: Unless otherwise noted in the contract documents, the minimum prescribed test pressure shall be at least 200 psi for lines smaller than 16 inches and 150 psi for lines 16 inches or larger, not to exceed 5 psi over the minimum prescribed test pressure, as measured at the lowest end of the section under test. The duration of each pressure test shall be at least 2 hours, during which time the test section shall not drop below the minimum prescribed test pressure. If the pressure in the pipe test section has not stabilized by the end of the testing period, a hydrostatic retest will be required.

Each section of a new line between sectionalizing valves or between the last sectionalizing valve and the end of the project shall be tested separately as required in AWWA C-600, and/or as modified in these specifications, except that any such section less than 500 feet in length may be tested with the adjacent section, if both sections of line have the same pipe class rating. No section greater than 1/2 mile in total pipe length shall be tested without special written permission of the Engineer.

(B) Testing Allowance/Makeup Water: Makeup water volume shall be determined after the pressure test has been satisfactorily completed and all backfilling and compaction has been completed to top of trench. Testing allowance shall be defined as the maximum quantity of makeup water necessary to be supplied into the pipe line section under test to restore the ending test pressure to the beginning test pressure, after the pipe line has been filled with water and all air expelled. The Contractor shall furnish the necessary apparatus and assistance to conduct the test.

The duration of each makeup water test shall be at least 2 hours. To pass the allowance testing, the quantity of makeup water from the pipe line shall not exceed the makeup water quantity allowed by the following formula, from AWWA C-600:

$$M = \frac{SD\sqrt{P}}{148{,}000}$$

in which

M = testing Allowance (makeup water), in gallons per hour.

S = length of pipe tested, in feet

D = nominal diameter of pipe, in inches.

P = test pressure of the pipe being tested, per 610.15 (A)

Should the test on any section of the pipe line require more makeup water than allowed by the above formula, the Contractor shall locate and repair the defective pipe, fittings, or joint until the makeup water volume is within the specified allowance. All repairs and retests, if required, shall be made at the Contractor's expense.

Connections to the existing pipelines or existing valves shall not be made until after that section of new construction has satisfactorily passed the hydrostatic tests.

Ductile iron pipe used in conjunction with ACP will be tested to the ACP standards, unless otherwise directed by the Engineer. High pressure systems of all ductile iron pipe will be tested in accordance with AWWA C-600, Section 4.1.

610.16 DISINFECTING WATER LINES:

After pressure testing and before placing in service, all water lines shall be disinfected. Disinfection shall be accomplished in accordance with Section 611. All valves in the lines being disinfected shall be opened and closed several times during the 24 hour period of disinfection.

610.17 PAVEMENT AND SURFACING REPLACEMENT:

Pavement and surfacing replacement shall be in accordance with the requirements of Section 336.

610.18 CLEANUP:

When testing, chlorination, compaction, and cleanup do not follow pipe laying in an orderly manner, the Engineer reserves the right to close down trenching and pipe laying until these operations are adequately advanced.

610.19 MEASUREMENT AND PAYMENT:

(A) Pipe:

(1) Measurement of all pipe shall be of the linear feet of pipe installed, measured along the centerline of the pipe, through all valves and fittings, from the centerline of the fittings or centerline of valves on ends of pipe to the centerline of fittings, centerline of valves on ends of pipe or to the end of pipe, as the case may be, for all through runs of pipe. Measurement shall be to the nearest 0.1 foot.

Revised 2014

Measurement of branch line pipe shall start at the centerline of valve at connection to the main. Branches of tees that are valued and capped will not be measured.

Measurement of meter service pipe shall be from the centerline of the new main to the connection at the meter, along the centerline of service pipe.

(2) Payment will be made at the unit price bid per linear foot of each type and size of pipe called for in the proposal. Such payment shall be compensation in full for furnishing and installing the pipe and fittings, specials, adapters, etc., complete in place, as called for on the plans and/or on the standard details, and shall include all costs of excavation, removal of obstructions, shoring and bracing, bedding, backfilling, compaction, maintenance of traffic, testing, disinfecting, connections to existing lines or works, and all work not specifically covered in other pay items.

A contingent item for fittings not shown on the plans shall be included in the proposal. Payment will be made at the unit price bid per pound on the theoretical weight of the fittings installed, which shall be compensation in full for furnishing and installing the fittings.

(1) Service Connection To Existing Water Meters: Measurement shall be of the number of unit connections made for water meter services, as called for in the proposal. Each proposal item unit shall consist of the connection to the water main and to the meter, as required in standard details.

(2) Payment will be made at the unit price bid for each unit water meter service connection and shall be compensation in full for labor materials (other than pipe) equipment, tapping, and all necessary incidentals. Payment for new service pipe required to make the connection will be made separately, as stipulated above.

(B) Relocation of Existing Meters and Boxes: Measurement shall be of the number of meters and boxes moved and reinstalled. Payment will be made at the unit price bid in the proposal for each meter and box relocated and installed.

(C) Permanent Pipe Supports and Encasement of Existing Pipes: Measurement shall be of each unit included in the proposal, and payment shall be compensation in full for supporting or encasing existing pipe, as required on the plans, including excavation, form work, reinforcing, concrete, handling and controlling flows in the existing pipe, removing and replacing existing pipe where necessary, supporting, backfilling and compaction, and pavement and/or surfacing replacement required in excess of pay width(s) allowed in Section 336.

(D) Concrete Thrust Blocks: Concrete thrust blocks and anchors for all pipe 16 inches and larger shall be measured by the cubic yard(s) of concrete placed, as required on the plans and/or as directed by the Engineer. Payment will be made at the unit price bid per cubic yard, and shall be compensation in full for excavation, formwork, placing and finishing concrete, reinforcing, backfilling and compaction, and pavement and/or surfacing replacement required in excess of pay width(s) allowed in Section 336. All thrust blocks and anchors for 12 inches and smaller pipe shall be included in the linear foot cost of the pipe.

(E) Valves: Measurement of and payment for valves, tapping sleeves and valves, and valve boxes shall be for each item furnished and installed, as designated in Section 630.

(F) Fire Hydrants: Measurement shall be the number of fire hydrants installed. Payment will be at the unit price bid for the installation of each fire hydrant complete in place and in operating condition. The 6 inches cast iron pipe and fittings, required for making the connection from the main to the hydrant, shall be a separate pay item in the proposal as described above.

(H) Pavement and/or Surfacing Replacement**:** Payment for pavement and/or surfacing replacement will be made as stipulated in Section 336, except as otherwise established in this specification. The cost of pavement and/or surface replacement required for meter service installations shall be included in the price bid for meter service pipe.

- End of Section -

PART 700

MATERIALS

Section	Last Revised	Title	Page
701	2013	Aggregate	701-1
702	2013	Base Materials	702-1
703	2012	Riprap	703-1
705	2012	Portland Cement Treated Base	705-1
708	2011	Asphalt Pavement Core Bonding Materials	708-1
710	2013	Asphalt Concrete	710-1
711	2014	Paving Asphalt	711-1
712	1999	Liquid Asphalt	712-1
713	2012	Emulsified Asphalts Materials	713-1
714	2012	Microsurfacing Materials	714-1
715	2012	Slurry Seal Materials	715-1
716	2012	Cover Material	716-1
717	2012	Asphalt-Rubber Asphalt Concrete	717-1
718	2012	Preservative Seal for Asphalt Concrete	718-1
725	2014	Portland Cement Concrete	725-1
726	1998	Concrete Curing Materials	726-1
727	2008	Steel Reinforcement	727-1
728	2013	Controlled Low Strength Material	728-1
729	2014	Expansion Joint Filler	729-1
735	2014	Reinforced Concrete Pipe	735-1
736	2012	Non-reinforced Concrete Pipe	736-1
738	2012	High Density Polyethylene Pipe and Fittings for Storm Drain and Sanitary Sewer	738-1
739	2014	Steel Reinforced Polyethylene Pipe & Fittings for Storm Drain, Irrigation & Sanitary Sewer	739-1
740	2014	Polypropylene Pipe & Fittings for Storm Drain, Irrigation & Sanitary Sewer	740-1
741	2011	Lining for Reinforced Concrete Sanitary Sewer Pipe	741-1
743	1998	Vitrified Clay Pipe	743-1
744	1998	ABS Truss Pipe and Fittings	744-1
745	1998	PVC Sewer Pipe and Fittings	745-1
750	2005	Iron Water Pipe and Fittings	750-1
752	1998	Asbestos-Cement Water Pipe and Fittings	752-1
753	2000	Galvanized Pipe and Fittings	753-1
754	2012	Copper Pipe, Tubing and Fittings	754-1

Section	Last Revised	Title	Page
755	2012	Polyethylene Pipe for Water Distribution	755-1
756	2008	Dry Barrel/Fire Hydrants	756-1
757	1998	Sprinkler Irrigation System	757-1
758	2005	Concrete Pressure Pipe - Steel Cylinder Type	758-1
759	2002	Steel Pipe	759-1
760	1998	Coating Corrugated Metal Pipe and Arches	760-1
761	1998	Structural Plate Pipe, Arches, and Pipe Arches	761-1
770	2013	Structural and Rivet Steel, Rivets, Bolts, Pins, and Anchor Bolts	770-1
771	2005	Galvanizing	771-1
772	2012	Chain Link Fence	772-1
775	1999	Brick and Concrete Masonry Units (Blocks)	775-1
776	2012	Masonry Mortar and Grout	776-1
778	1998	Lumber	778-1
779	1998	Wood Preservatives	779-1
787	1999	Gray Iron Castings	787-1
790	1999	Paint	790-1
792	2010	Dust Palliative	792-1
795	2014	Landscape Material	795-1
796	2010	Geosyntrhetics	796-1

SECTION 711

PAVING ASPHALT

711.1 GENERAL:

The asphalt shall be produced from crude asphalt petroleum or a mixture of refined liquid asphalt and refined solid asphalt. It shall be free from admixture with any residues obtained by the artificial distillation of coal, coal tar, or paraffin oil and shall be homogeneous and free from water.

Polymer modified asphalt cement shall be produced from crude asphalt petroleum and a polymer or blend of polymers mixed to produce a homogeneous material free from water.

Asphalt shall not be heated during the process of its manufacture, storage, or during construction so as to cause injury as evidence by the formation of carbonized particles.

711.2 TESTING REQUIREMENTS:

Paving asphalt shall be classified by the Performance Grading System and shall conform to the requirements set forth in Table 711-1 and AASHTO M-320 with the PAV temperature changes noted in the table. On all Grades Flash Point Temperature AASHTO T48: Minimum 230 °C and Mass Loss, Maximum 1.00 percent.

TABLE 711-1				
PERFORMANCE GRADING SYSTEM				
	PG 58-22	**PG 64-16**	**PG 70-10**	**PG 76-16**
Original Asphalt				
Viscosity, AASHTO T-316 (Note 1) Max. 3 Pa-s, Test Temp, °C	135	135	135	135
Dynamic Shear AASHTO T-315 (Note 2) G*/Sin δ, Min., 1.0 kPa Test Temp. @ 10 rad/s, °C	58	64	70	76
Tests Using Rolling Thin Film Oven Residue (AASHTO T-240)				
Mass Loss, Maximum %	1.0	1.0	1.0	1.0
Dynamic Shear AASHTO T-315 G*/Sin δ, Min., 2.20 kPa Test Temp. @ 10 rad/s, °C	58	64	70	76
Tests Using Pressure Aging Vessel Residue (AASHTO R-28)				
PAV Aging Temperature, °C (AASHTO R-28)	100	100	110	110
Dynamic Shear AASHTO T-315 G*·Sin δ, Max., 5000 kPa Test Temp. @ 10 rad/s, °C	22	28	34	34
Creep Stiffness, AASHTO T-313 (Note 3) S, Maximum, 300.0 Mpa *m*-value, Minimum, 0.300 Test Temp. @ 60s, °C	-12	-6	0	-6
Direct Tension, AASHTO T-314 (Note 3) Failure Strain, Minimum 1.0% Test Temp. @ 1.0 mm/min. °C	-12	-6	0	-6

NOTES:

(1) This requirement may be waived at the discretion of the specifying agency if the supplier warrants that the asphalt binder can be adequately pumped and mixed at temperatures that meet all applicable safety standards.

(2) For quality control of unmodified asphalt cement production, measurement of the viscosity of the original asphalt cement may be substituted for dynamic shear measurements of G*/sin(d) at test temperatures when the asphalt is a

Newtonian fluid. Any suitable standard means of viscosity measurement may be used, including capillary or rotational viscometer (AASHTO T-210 or AASHTO T-202).

(3) If the Creep Stiffness is below 300 MPa, the direct tension test is not required. If the Creep Stiffness is between 300 and 600 MPa, the direct tension failure strain requirement can be used in lieu of the Creep Stiffness requirement. Direct tension test is recommended for polymer modified asphalt binders. The m-value requirement must be satisfied in all cases.

Polymer modified paving asphalt shall be classified by the Performance Grading System and shall conform to the requirements set forth in Table 711-2 and AASHTO M320 with the PAV temperature changes noted in the table. On all Grades Flash Point Temperature AASHTO T48: Minimum 230 °C and Mass Loss, Maximum 1.00 percent. P is for Polymer and TR is for Tire Rubber.

TABLE 711-2

PERFORMANCE GRADING SYSTEM

	PG 64-28P	**PG-76-22P**	**PG76-22TR Type 1 (Note 4)**	**PG76-22TR Type 2 (Note 4)**
Viscosity, AASHTO T-316 (Note 1) Max. 3 Pa-s, Test Temp, °C	135	135	135	135
Dynamic Shear, AASHTO T-315 (Note 2) G*/Sin δ, Min., 1.0 kPa Test Temp. @ 10 rad/s, °C	64	76	76	76
Elastic recovery, ASTM D6084 Procedure "B" @ 10°C	65	65	65	55
Phase Angle, Max	75	75	75	75
Separation test, Texas 540 % Max	4	4	4	4
Solubility in Trichloroethylene, ASTM 2042 or n-propyl bromide, ASTM D7553 % Minimum	–	–	97.5	–
Tests Using Rolling Thin Film Oven Residue (AASHTO T-240)				
Mass Loss, Maximum %	1.0	1.0	1.0	1.0
Dynamic Shear, AASHTO T-315 G*/sin δ, Min., 2.20 kPa Test Temp. @ 10 rad/s, °C	64	76	76	76
Tests Using Pressure Aging Vessel Residue (AASHTO R-28)				
PAV Aging Temperature, °C (AASHTO R-28)	100	110	110	110
Dynamic Shear, AASHTO T-315 G*sin δ, Max., 5000 kPa Test Temp. @ 10 rad/s, °C	22	31	31	31
Mass Loss, AASHTO T-240 Weight % Max	1.0	1.0	1.0	1.0
Creep Stiffness, AASHTO T-313 S, Maximum, 300 Mpa *m*-value, Minimum, 0.300 Test Temp. @ 60s, °C	-18	-12	-12	-12
Direct Tension, AASHTO T-314 (Note 3) Failure Strain, Minimum 1.0% Test Temp. @ 1.0 mm/min. °C	-18	-12	-12	-12

Revised 2014

NOTES:

(1) This requirement may be waived at the discretion of the specifying agency if the supplier warrants that the asphalt binder can be adequately pumped and mixed at temperatures that meet all applicable safety standards.

(2) For quality control of unmodified asphalt cement production, measurement of the viscosity of the original asphalt cement may be substituted for dynamic shear measurements of G*/Sin δ, at test temperatures when the asphalt is a Newtonian fluid. Any suitable standard means of viscosity measurement may be used, including capillary or rotational viscometer (AASHTO T-210 or AASHTO T-202).

(3) If the Creep Stiffness is below 300 MPa, the direct tension test is not required. If the Creep Stiffness is between 300 and 600 MPa, the direct tension failure strain requirement can be used in lieu of the Creep Stiffness requirement. Direct tension test is recommended for polymer modified asphalt binders. The m-value requirement must be satisfied in all cases.

(4) "TR" binders shall have 9% to 11% reclaimed tire rubber and enough virgin polymer to meet all performance grade criteria specified. The blend percentages shall be listed on the Certificate of Compliance by the manufacturer. Type 1 shall meet solubility limits.

711.3 TEST REPORT AND CERTIFICATION:

At the time of delivery of each shipment of asphalt, the supplier supplying the material shall deliver to the purchaser 3 certified copies of the test report which shall indicate the name of the refinery and supplier, type and grade of asphalt delivered, date and point of delivery, quantity delivered, delivery ticket number, purchase order number, and results of the above specified tests. The test report shall be signed by an authorized representative of the supplier certifying that the product delivered conforms to the specifications for the type and grade indicated.

Until the certified test reports and samples of the material have been checked by the Engineer, that material will be only tentatively accepted by the Contracting Agency. Final acceptance will be dependent upon the determination of the Engineer that the material involved fulfills the requirements prescribed. The certified test reports and the testing required in connection with the reports shall be at no additional cost to the Contracting Agency.

711.4 TEMPERATURES:

Paving asphalt shall be heated in such a manner that steam or hot oils will not be introduced directly into the paving asphalt during heating.

711.5 CONVERSION OF QUANTITIES:

When pay quantities of paving asphalt are determined from volumetric measurements, the volumetric measurement at any temperature shall be reduced to the volume the material would occupy at 60 degrees F. in accordance with ASTM D1250. In converting volume to weight, the computations shall be based on Table 711-3.

TABLE 711-3		
ASPHALT CEMENT QUANTITY CONVERSION		
Grade of Material	**Gals. Per Ton of 60 °F.**	**Lbs. Per Gal at 60 °F.**
PG 58-22	236	8.47
PG 64-16	235	8.51
PG 70-10	235	8.51
PG 64-28P	236	8.47
PG 76-22P,TR	236	8.47
PG 76-16	233	8.58

- End of Section -

SECTION 712

LIQUID ASPHALT

712.1 GENERAL:

Liquid asphalt shall consist essentially of either natural crude or refined asphalt petroleum, or a residual product thereof.

The liquid asphalt shall be medium curing product designed by the letters MC, and shall consist of a paving asphalt conforming to the provisions in Section 711, fluxed or blended with a kerosene type solvent.

The asphalt shall not be heated during the process of its manufacture or during construction so as to cause injury as evidence by the formation of carbonized particles.

712.2 TEST REQUIREMENTS:

The liquid asphalt shall consist of materials specified above and shall conform to the requirements set forth in Table 712-1.

712.3 TEST REPORTS AND CERTIFICATIONS:

Test reports and certifications will be furnished in accordance with Section 711.

712.4 CONVERSION OF QUANTITIES:

When pay quantities of liquid asphalt are determined from volumetric measurements, the volumetric measurement at any temperature shall be reduced to the volume the material would occupy at 60 degrees F. in accordance with ASTM D1250. In converting volume to weight, the computations shall be based on the data contained in Table 712-2

TABLE 712-1

AASHTO M-82 TABLE 1

	MC-30		MC-70		MC-250		MC-800		MC-3000	
	Min.	Max.	Min.	Max.	Min.	Max.	Min.	Max.	Min.	Max.
Kinematic Viscosity at 60°C (140°F) centistokes	30	60	70	140	250	500	800	1600	3000	6000
Flash point (Tab. open-cup), degrees C° (F)	38 (100)	. . .	38 (100)	. . .	66 (150)	. . .	66 (150)	. . .	66 (150)	. . .
Water percent	. . .	0.2	. . .	0.2	. . .	0.2	. . .	0.2	. . .	0.2
Distillation test: Distillate percentage by volume of total distillate to 360°C (680°F)										
to 225°C (437°F)	. . .	25	0	20	0	10	. . .	. . .	. . .	. . .
to 260°C (500°F)	40	70	20	60	15	55	0	35	0	15
to 315°C (600°F)	75	93	65	90	60	87	45	80	15	75
Residue from distillation to 360°C (680°F) Volume percentage of sample by difference	50	. . .	55	. . .	67	. . .	75	. . .	80	. . .
Tests on residue from distillation:										
Absolute viscosity at 60°C (140°F) poises	300	1200	300	1200	300	1200	300	1200	300	1200
Ductility, 5 cm/min, cm.	100	. . .	100	. . .	100	. . .	100	. . .	100	. . .
Solubility in Trichloroethylene, percent	99	. . .	99	. . .	99	. . .	99	. . .	99	

Asphaltenes, % w (max)	D-2006-70	N/A	10.0 Max.	N/A	1.00
Maltene Dist. Ratio	D-2006-70	N/A	0.2-1.4	N/A	0.3-0.6
PC/S Ratio[45] (Min) (Note 4)	D-2006-70	N/A	0.5 Min.	N/A	0.5
Saturated Hydrocarbons,S[5] (note 4)	D-2006-70	N/A	28 Max.	N/A	21-28

Notes:
1. Kreb units (ASTM D562)
2. A full set of tests shall be performed by as specified by the special provisions in the undiluted condition. These tests and any other specified will be performed at the contractor's expense.
3. The Ultraviolet resistance testing results will be provided at no cost to the engineer.
4. Only residue by evaporation shall be run on diluted samples. Specification limits should be diluted rate times minimum residual value of concentrate.
5. PC/S ratio: $\frac{PC + A_1}{S + A_2}$[5]

- End of Section -

SECTION 725

PORTLAND CEMENT CONCRETE

725.1 GENERAL:

Portland cement concrete shall be composed of cementitious materials, fine and coarse aggregates, water, and, if specified or allowed, certain chemical admixtures and additives.

TABLE 725-1		
CONCRETE CLASSES - MINIMUM REQUIREMENTS		
Class of Concrete	Minimum Cementitious Materials Content (lbs. per cubic yard)	Minimum Compressive Strength (1) at 28 Days (psi)
AA	600	4000
A	520	3000
B	470	2500
C	420	2000

(1) In accordance with section 725.8.

725.2 CEMENTITIOUS MATERIALS:

Cementitious materials to be used or furnished under this specification shall be:

Portland cement, meeting the requirements of ASTM C150
Type II, low alkali, when no other specific type is specified
Type III, low alkali, for high early strength, when applicable or specified
Type V, low alkali, when specified in the special provisions for applications requiring high sulfate resistance

Portland Pozzolan Cement ASTM C595
Type IP (MS), when no other specific type is specified

Supplementary Cementitious Materials (SCM) shall not be used as an additional cementitious materials replacement in concrete in combination with Portland Pozzolan Cement.

Cementitious materials shall be sampled and tested as prescribed in the applicable ASTM specifications. The Contractor shall obtain and deliver to the Engineer a certification of compliance signed by the material manufacturer, identifying the cementitious material and stating that the cementitious material delivered to the batching site complies with the appropriate specifications. When requested by the Engineer, the Contractor shall furnish three copies of the cementitious materials certification. The cost of furnishing tested cementitious materials shall be considered as included in the contract bid price and no additional allowance will be made therefore.

When suitable facilities, as recommended by the Concrete Plant Manufacturer's Bureau, and approved by the Engineer, are available for handling and weighing bulk cementitious materials, such facilities shall be used. Otherwise the cementitious material shall be delivered in original unopened sacks that bear the name or brand of the manufacturer. The type of cementitious material, and the weight contained in each sack shall be plainly marked thereon.

Cementitious materials shall be stored in such manner as to permit ready access for the purpose of inspection and identification, and so as to be suitably protected against damage by contamination or moisture. Should any lot of bulk cementitious material be delivered to the site show evidence of contamination, the Engineer may require that such lot be removed from the site.

725.2.1 Supplementary Cementitious Materials (Pozzolans): Supplementary Cementitious Materials to be used in concrete or furnished under this specification shall conform to the appropriate ASTM requirements as follows:

Fly ash or natural pozzolan	ASTM C618 and C311
Silica Fume	ASTM C1240

SECTION 729

EXPANSION JOINT FILLER

729.1 PREMOLDED JOINT FILLER:

Expansion joint filler materials shall consist of preformed strips of a durable resilient compound and comply with ASTM D1751, D1752, or D2628, as specified by the Contracting Agency or as approved by the Engineer.

729.2 POUR TYPE JOINT FILLERS FOR PORTLAND CEMENT CONCRETE PAVING (PCCP):

Pour type joint fillers shall comply with ASTM D3406 or as approved by the Engineer. Joint sealant shall not contain any coal tar materials. The following requirement shall be added to paragraphs 7.1 of ASTM D3406:

The minimum ambient temperature during application and ambient temperatures under various storage conditions shall be clearly marked on the container.

729.3 TEST REPORT AND SHIPMENT CERTIFICATE:

Each shipment shall be accompanied by a certificate from the supplier that the material will comply with the above specifications and such certificate shall be delivered to the Engineer.

- End of Section -

This Page is Reserved for Future Use

SECTION 735

REINFORCED CONCRETE PIPE

735.1 GENERAL:

These specifications cover reinforced concrete pipe and related structures intended to be used for conveyance of sewage, industrial waste, and storm and irrigation water.

The size, type, and D-load of the concrete pipe to be furnished shall be as shown on the plans, or as specified under the item of work for the project of which the pipe is a part and shall be for pipe installed by the open-cut method of construction.

When specified in the special provisions, four sets of pipe line layout drawings shall be furnished to the Engineer prior to the manufacture of the concrete pipe. Catch basin connector pipe need not be included in the pipe line layout; however, pipe stubs shall be included. In lieu of including catch basin connector pipe in the pipe layout, a list of catch basin connector pipes shall accompany the layout. The connector pipe list shall contain the following information.

(A) Size and D-load of pipe.

(B) Station at which pipe joins main line.

(C) Number of section of pipe, length of section, type of sections (straight, horizontal bevel, vertical bevel, etc.).

The pipe layouts will be used by the Contracting Agency for reference only, but their use shall in no way relieve the Contractor of the responsibility for the correctness of the layout.

(D) All pipe installed in tunnels shall be ASTM C76, Class III. Pipe stronger than that specified may be furnished at the Contractor's option, and at no additional cost to the Contracting Agency, provided such pipe conforms in all other respects to the applicable provisions of these specifications.

Whatever struts or other protective methods proved necessary to furnish and install the pipe to meet the limitation of cracks as specified herein, shall be provided and maintained throughout pipe handling and transportation.

735.2 QUALITY:

Reinforced concrete pipe shall be manufactured and tested in conformance with the requirements of ASTM C76, except as modified herein.

All reinforced concrete pipes less than 36 inch inside diameter shall include an area of reinforcing steel in the bell not less than the area required for the circumferential reinforcement in the wall of the pipe.

735.3 CURVES, BENDS AND CLOSURES:

Horizontal and vertical long-radius curves shall be formed by bevel adapters or by beveling the straight pipe joint. The bevel of the pipe shall not exceed 5 degrees and the total angular deflection, for beveled pipe, shall not exceed 10 degrees. Small angular changes may be made with straight pipe provided that the joint opening does not exceed 3/4 inch. Short radius curves and closures shall be formed with fabricated specials; however, the angular deflection of any segment of the fabricated section shall not exceed 10 degrees.

735.4 MATERIALS:

Except when otherwise permitted by the Engineer, no materials other than water, Portland cement, Pozzolanic materials, mineral aggregates and steel shall be used in the manufacturing of the pipe, conforming to ASTM C76, with the following exceptions:

(A) Portland Cement: Portland cement shall comply with ASTM C150, Type II, and low alkali. The pipe manufacturer shall supply a cement mill certificate in triplicate for each load of cement delivered, showing the specification, type, chemical analysis, and quantity. In lieu of the above, on stockpiled pipe the manufacturer shall certify that the type of cement used meets

this specification. The pipe manufacturer shall also certify in writing that the cement content of the concrete complies with the specifications as to yield per cubic yard of concrete poured.

(B) Concrete Admixtures: The pipe manufacturer shall certify in writing that no calcium chloride or admixture containing calcium chloride has been used in the manufacture of the pipe. Other admixtures may be used if approved by the Engineer. The pipe manufacturer shall certify to the brand and chemical content of such admixtures used.

(C) Steel Reinforcement: The pipe manufacturer shall supply three copies of mill certificates showing heat numbers, chemical analysis, and physical tests on reinforcing steel. In lieu of the above, on stockpiled pipe the manufacturer shall certify that the type of steel used meets this specification. The number of steel wraps shall not be less than 5 percent below that shown on the shop drawing for any one pipe.

(D) Rubber gaskets shall be in accordance with ASTM C443.

735.5 MANUFACTURER'S QUALIFICATIONS AND EQUIPMENT REQUIREMENTS:

The manufacturer shall be competent to manufacture the type, size and quality of pipe; in addition, he shall have satisfactory curing and storage facilities, and satisfactory financial resources.

Calibration of Cement and Aggregate Scales: The pipe manufacturer shall make whatever alterations are necessary to his equipment to enable the Contracting Agency's Sealer or State Inspector of Weights and Measures to check, calibrate, and seal the aggregate and cement scales used in the pipe production.

735.6 CURING OF PIPE:

(A) Steam Curing: The manufacturer shall provide adequate steam plant, piping, enclosures, and other facilities for curing the pipe. The enclosures shall be such that the temperature is maintained continuously between 110 and 150°F.

(B) Curing of the pipe shall not commence until the concrete has attained its initial set, but in any event not sooner than 1 hour no later than 8 hours after placing of the concrete. Rate of rise of temperature shall not exceed 30°F per hour.

(C) Water Curing: The pipe shall be kept moist during daylight hours. The pipe, including the ends, shall be covered with burlap for the first 3 days, except that, if the pipe is kept constantly and completely wet with fog sprays during the daylight hours, the burlap covering may be omitted. If the manufacturer fails to proceed immediately with the required water curing he shall seal the surfaces of the concrete, except joint surfaces that are to be grouted, with an approved, white pigmented sealing compound in accordance with Section 726.

735.7 TESTS AND ACCEPTANCE:

(A) Basis of Acceptance: The basis of acceptance for the reinforced concrete pipe shall be in accordance with ASTM C76 by the method stated in the special provision and as amended herein. However, the purchaser may, at his option, make concrete cylinder tests for the purpose of determining release dates for shipment of the pipe and for his information in regard to general quality of the concrete.

(B) Segregation of Material: The slump of the concrete mix shall not exceed 4 inches so as to preclude excessive segregation of the materials used and shall be proportioned so that the result shall be a homogeneous concrete mixture of such quality that the pipe will conform to the tests and design requirements of these specifications.

(C) A pipe has failed the D-load test when the opening crack exceeds .01 inch for a distance of 1 foot when measured at close intervals. These measurements are taken within the 1 foot measured span only when the crack line is more or less parallel to the axis of the pipe, as it is obvious that where the crack deviates substantially from parallel, and approaches a direction normal to the axis, that the edges of the crack tend to slip past each other, instead of opening up under load. The intent of the test is to measure the crack opening under stress.

(D) Porous or honeycomb concrete areas 6 inches or less in diameter may be removed and repaired. Pipe having defects or repairs greater than 6 inches in diameter will not be accepted.

738.8 MARKINGS:

Markings on pipe shall be per ASTM F894, AASHTO M-252 or AASHTO M-294. These markings shall be clearly shown on the pipe at intervals of approximately 12 feet and include but not limited to the following: the manufacturer's name or trademark, nominal size, the specification designation, plant designation code, date of manufacture or an appropriate code. All fittings shall be marked with the designation number of the specification and with the manufacturer's identification symbol. In addition, manufacturers of corrugated HDPE, AASHTO M-294, shall print on or affix the appropriate Plastic Pipe Institute Program Mark on each length of pipe produced that meets the requirements of the program.

738.9 CARE OF PIPE AND MATERIALS:

Care of pipe materials shall comply with Subsection 736.5.

HDPE profile reinforced RSC type pipe in shipping or storage shall not be stacked higher than three rows for pipes 21 inches in diameter or less, nor higher than two rows for pipes 24 to 36 inches in diameter inclusive. Pipe shall not be stacked, shipped, or stored with weight on the bells of the pipe.

Corrugated HDPE pipe in shipping and storage shall be stacked per manufacturer's recommendation, but in no case higher than 5 rows for pipe 24 inches or less in diameter, or 3 rows for pipe greater than 24 inches in diameter.

Pipe that is gouged marred or scratched forming a clear depression shall not be installed and shall be removed if damaged in the installation.

- End of Section –

SECTION 739

STEEL REINFORCED POLYETHYLENE PIPE AND FITTINGS FOR STORM DRAIN, IRRIGATION AND SANITARY SEWER

739.1 GENERAL:

This specification covers the requirements of Steel Reinforced Polyethylene Pipe (SRPE) pipe manufactured per ASTM F2562 for storm drains, irrigation and sanitary sewer systems. When noted on the plans or in the special provisions, storm drains, irrigation and sanitary sewers may be constructed using SRPE pipe. SRPE pipe shall be designed in accordance with AASHTO LRFD Bridge Design Specifications, Section 12. Trench excavation, backfilling and compaction for this flexible pipe shall be in accordance with Section 603. Construction and installation shall be in accordance with Section 618 for storm drain and irrigation water or Section 615 for sanitary sewers.

The pipe stiffness class shall be Class 1, per Table 1 of ASTM F2562, unless otherwise specified.

739.2 MATERIALS:

739.2.1 Base Steel Materials: Continuous high strength galvanized ribs shall be cold rolled steel meeting the requirements of either ASTM A1008 or ASTM A1011 with minimum yield strength of 80,000 psi. The steel shall have a galvanized coating meeting the requirements of ASTM A653 with a G60 minimum coating weight. Steel ribs shall be completely encased within the HDPE profile.

739.2.2 HDPE Material Composition: SRPE pipe HDPE material and fittings shall, in accordance with ASTM F2562, be made from HDPE plastic compound meeting the minimum requirements of cell classification 335464C or higher cell classification, in accordance with ASTM D3350.

739.2.3 Gaskets: Elastomeric gaskets shall comply with the requirements in ASTM F477 and be as recommended by the pipe manufacturer.

739.2.4 Water Stops: Elastomeric Water stop gaskets shall conform to the requirements of ASTM C923.

739.2.5 Thermal Welding Material: The material used for thermal welding of the pipe shall be compatible with the pipe's base material.

739.2.6 Lubricant: The lubricant used for assembly shall comply with manufacturer's recommendations and have no detrimental effect on the gasket or pipe.

739.3 JOINING SYSTEMS:

739.3.1 Gasket Type: Steel reinforced bell and spigot joints for the piping system and fittings shall consist of an integrally formed bell and spigot gasketed joint. The joint shall be designed so that when assembled, the elastomeric gasket located on the spigot is compressed radially on the pipe or fitting bell to form a water tight seal. The joint shall be designed so to prevent displacement of the gasket from the joint during assembly and when in service. The elastomeric gasket shall meet the provision of ASTM F477. Gasketed watertight pipe joints shall meet a minimum laboratory test pressure of 10.8 psi when tested in accordance with ASTM D3212.

All pipes shall have a home mark on the spigot end to indicate proper penetration when the joint is made. The bell and spigot configurations for fittings shall be compatible to those used for the pipe.

Joints shall provide a seal against exfiltration and infiltration. All surfaces of the joint upon which the gasket may bear, shall be smooth and free of any imperfections, which would adversely affect the seal. The assembly of the gasketed joints shall be in accordance with the pipe manufacturer's recommendations.

739.3.2 Thermal Weld Type: Thermal weld joints, when specified, shall utilize plain ended pipe welded together by internal pressure testable couplers. The internal couplers shall have a minimum wall thickness equal to or greater than the pipe wall thickness as defined in ASTM F2562. The assembly of the welded joints shall be in accordance with the manufacturer's recommendations. Thermal welded pipe joints shall meet a minimum laboratory test pressure of 10.8 psi when tested in accordance with ASTM D3212.

739.3.3 Pipe to Concrete Structure Connections: An approved flexible connector, mechanical seal or water stop shall be provided at manhole entry or concrete structure connection to reduce infiltration and exfiltration. When grouting is necessary at a water stop connection, non-shrink grout shall be used.

739.4 FITTINGS:

Fittings for SRPE pipe may include tees, elbows, manhole adapter rings, plugs, caps, adapters and increasers. Fittings shall be joined by gasket type or thermal weld type joints in accordance with Subsection 739.3.

739.5 CERTIFICATION:

The manufacturer shall furnish a certification that all delivered materials comply with the requirements of ASTM F2562. The certification shall also identify the steel as galvanized with a G60 minimum coating weight, 80,000 psi yield strength and the cell classification of the HDPE material as 335464C minimum.

739.6MARKINGS:

Markings on pipe and fittings shall be per ASTM F2562. The markings shall be clearly shown on the pipe, at least, at the end of each length of pipe and spaced at intervals of not more than 10 feet. Markings shall include the following information: ASTM F2562, the nominal pipe size in inches, the pipe stiffness class, the manufacturer's name, trade name or trademark, the manufacturer's production code: identifying plant location, machine, and date of manufacture.

739.7 CARE OF PIPE AND MATERIALS:

All pipe, fittings, gaskets and water stop materials shall be manufactured, handled, loaded, shipped, unloaded, and installed in such a manner as to be undamaged and in sound condition, in the completed work. Particular effort shall be exercised to protect the ends of the pipe. Repairs on damaged pipe shall be made to the satisfaction of the Engineer or removed from the project site. Rubber Elastomeric gaskets shall be covered in a factory applied protective wrap.

- End of Section -

SECTION 740

POLYPROPYLENE PIPE AND FITTINGS FOR STORM DRAIN, IRRIGATION AND SANITARY SEWER

740.1 GENERAL:

This specification covers the requirements of profile wall (both dual wall - Type S and triple wall - Type D) polypropylene (PP) pipe manufactured per ASTM F2736 and AASHTO M330 for storm drain, or ASTM F2736 or ASTM F2764 for sanitary sewer systems. When noted on the plans or in the special provisions, storm drains, irrigation and sanitary sewers may be constructed using PP pipe. PP pipe approved sizes are 12 inch diameter through 60 inch diameter. Trench excavation, backfilling and compaction for flexible pipe shall be in accordance with Section 603 and manufacturer's installation recommendations. Construction and installation shall be in accordance with Section 618 for storm drain and irrigation water or Section 615 for sanitary sewers.

740.2 MATERIALS:

740.2.1 Base Material Composition: Profile pipe base material and fittings shall meet polypropylene materials requirements as stated in Section 4, Table 1 of ASTM F2736, Section 5, Table 1 of ASTM F2764 or Section 6, Table 1 of AASHTO M330.

740.2.2 Gaskets: Elastomeric gaskets shall comply with the requirements in ASTM F477 and be as recommended by the pipe manufacturer.

740.2.3 Water Stops: Elastomeric **w**ater stop gaskets shall conform to the requirements of ASTM C923.

740.2.4 Lubricant: The lubricant used for assembly shall comply with manufacturer's recommendations and have no detrimental effect on the gasket or pipe.

740.3 JOINING SYSTEMS:

740.3.1 Gasket Type: Joints for the piping system and fittings shall consist of an integrally formed bell and spigot gasketed joint. The joint shall be designed so that when assembled, the elastomeric gasket located on the spigot is compressed radially on the pipe or fitting bell to form a water tight seal. The joint shall be designed so to prevent displacement of the gasket from the joint during assembly and when in service. The elastomeric gasket shall meet the provision of ASTM F477. Gasketed watertight joints shall meet laboratory test pressure of 10.8 psi when tested in accordance with ASTM D3212.

All pipes shall have a home mark on the spigot end to indicate proper penetration when the joint is made.

The bell and spigot configurations for fittings shall be compatible to those used for the pipe.

Joints shall provide a seal against exfiltration and infiltration. All surfaces of the joint upon which the gasket may bear, shall be smooth and free of any imperfections, which would adversely affect the seal. The assembly of the gasketed joints shall be in accordance with the pipe manufacturer's recommendations.

740.3.2 Pipe to Concrete Structure Connections: An approved flexible connection, mechanical seal, or water stop shall be provided at manhole entry or concrete structure connections to reduce infiltration and exfiltration. When grouting is necessary at a water stop connection, non-shrink grout shall be used.

740.4 FITTINGS:

Fittings for PP pipe may include tees, elbows, manhole adapter rings, plugs, caps, adapters and increasers. Fittings shall be joined by gasket type joints in accordance with Subsection 740.3.

The material used for thermally welding the fitting shall be compatible with the base pipe material.

740.5 CERTIFICATION:

The manufacturer shall furnish a certification that all delivered materials comply with the requirements of ASTM F2736, ASTM F2764, or AASHTO M330.

740.6 MARKINGS:

Markings on pipe and fittings shall be per ASTM F2736, ASTM F2764 or AASHTO M330. The markings shall be clearly shown on the pipe, at least, at each end of each length of pipe and spaced at intervals of not more than 10 feet. Markings shall include the following information: the manufacturer's name or trademark, nominal size, the specification designation, plant designation code, date of manufacture or an appropriate code. All fittings shall be marked with the designation number of the specification and with the manufacturer's identification symbol.

740.7 CARE OF PIPE AND MATERIALS:

All pipe, fittings, gaskets, and water stop materials shall be manufactured, handled, loaded, shipped, unloaded, and installed in such manner as to be undamaged and in sound condition, in the completed work. Particular effort shall be exercised to protect the ends of pipe. Repairs on damaged pipe shall be made to the satisfaction of the Engineer or removed from the project site. At all times elastomeric gaskets shall be covered in a factory applied protective wrap until ready for use.

- End of Section

SECTION 741

LINING FOR REINFORCED CONCRETE SANITARY SEWER PIPE

741.1 GENERAL:

The interior area of the reinforced concrete pipe as indicated on the plans, shall be sealed and protected with lining, as specified below.

The installation and application of the pipe lining shall be accomplished by the supplier of the reinforced concrete pipe.

All work for and in connection with the installation of lining in concrete pipe and the field sealing of joints shall be done in strict conformance with all applicable published specifications, instructions and recommendations of the approved lining manufacturer. The pipe supplier shall furnish all labor, material and equipment to successfully accomplish the lining.

741.2 MATERIALS:

741.2.1 Material Composition: The material shall be a liner plate which is a combination of inert, synthetic resins, pigments, and plasticizers, compounded to make permanently flexible sheets.

The liner plate shall be resistant to the following: Oxidizing agents, sulfuric, phosphoric, nitric, chromic, oleic, and stearic acids; sodium and calcium hydroxides; ammonia, sodium, calcium, magnesium, and ferric chlorides; ferric sulfate, petroleum oils and greases; vegetable and animal oils, fats, greases and soaps.

Liner plate shall be impermeable to sewage gasses and liquids and shall be non-conducive to bacterial or fungus growth. All liner plates shall be factory checked electrically to insure freedom from any porosity with a high voltage holiday detector set at a minimum of 20,000 volts.

Joint strips and welding strips shall have the same composition and corrosion resistance as liner plate, but shall not have locking extensions.

The lining shall have good impact resistance, shall be flexible and shall have an elongation sufficient to bridge up to 1/4 inch setting crack which may take place in the pipe or in the joint after installation, without damage to the lining.

Once cast into the pipe, the lining shall be permanently and physically attached to the concrete by a locking extension and shall not rely on an adhesive bond.

741.2.2 Material Details and Dimensions: The liner plate shall not be less than 0.065 inches in thickness. Locking extension shall be of the same material as the liner and shall be integrally extruded with the sheets. If steel bands are used to secure the liner plate to the forms transversely, strap channels shall be integrally molded into the sheet.

Liner plate shall be supplied as pipe size sheets fabricated by shop welding together the basic size sheets.

Joint straps shall be 4 inches ± 0.25 inches in width and shall have each edge beveled prior to application.

Welding strips shall be 1 inch ± 0.125 inch in width and shall have the edges beveled at time of manufacture.

The Contractor shall submit a shop drawing showing liner plate details for approval by the Engineer, prior to fabrication of the pipe.

741.3 INSTALLATION OF LINER PLATE:

The installation of liner plate, including the welding of all joints, shall be done in accordance with the manufacturer's recommendations. Nailing through the plate will not be tolerated. Liner plate shall be installed with locking extensions parallel with the longitudinal axis of the sewer, unless otherwise shown on the plans. All joints between individual sheets or sections of liner plates shall be continuously heat-welded by the use of welding strips of the same kind and equivalent thickness of material as the liner plates (with the exception of the integral extension ribs).

795.6 SEEDS:

Seeds shall be fresh, clean seeds, pre-mixed to the specified proportion. They shall be delivered to the site in original, unopened containers bearing the dealer's guaranteed analysis and germination percentage. They shall have a certificate or a stamp or a release accomplished by an agricultural commission.

795.7 PLANTS, TREES, AND SHRUBS:

795.7.1 General: All landscape stock shall be grown in nurseries approved by the State Department of Agriculture. They shall have a growth habit normal to the specie. Stock shall be sound, healthy, and vigorous; free from insect pests, sun scald, excessive bark abrasions and other objectionable disfigurements. They shall have normal, well-developed branch systems and vigorous, fibrous root systems which are neither root nor pot-bound and are free of kinkled or girdling roots.

All stock shall have been grown in pots, cans, tubs, or boxes for a minimum of three months and a maximum of one year. They shall have sufficient roots to hold earth together after removal from the containers. This earth shall be free from noxious weeds including Bermuda grass.

Stock shall be inspected and approved by the Engineer at the Contractor's storage site prior to delivery to the project.

795.7.2 Flatted Plants: Flatted plants shall be grown and remain in the flats until transported to the project site. The soil and spacing of the plants in the flats shall insure the minimum disturbance of the root system at transplanting.

795.7.3 Trees: Trees shall be of the specified height, spread and caliper and shall stand erect without support. The height shall be measured from the root crown to the last division of the terminal leader with the branches in a normal position and the caliper shall be measured 12 inches above the crown roots. For palm trees only, the height shall be measured from the ground line to the base of the growing bud.

795.7.4 Shrubs: Shrubs shall be of the specified type, height and spread. They shall be selected from high quality, well-shaped nursery stock.

795.8 MISCELLANEOUS MATERIAL:

795.8.1 Headers and Stakes: Lumber for landscaping shall be construction heart, rough-sawn redwood in the sizes specified; splicing will not be permitted. Stake used with header boards shall be 2 x 4 inches, pointed and at least 18 inches long.

795.8.2 Tree Stakes: Unless otherwise specified, tree stakes shall be 2 x 2 inch redwood posts, free of knots and reasonably straight, and of sufficient length to properly support the tree.

795.8.3 Tie Wires: Tie wire shall be No. 12 AWG zinc coated wire and the cover for this wire shall be 1/2 inch garden hose.

795.8.4 Decomposed Granite: All material used for a specific project or location shall be from a single source and shall present a uniform appearance. The gradation shall be as shown below. If a specific color or type is required, it will be so indicated in the Contracting Agency's specifications.

Sieve Size	Percent Passing
3/4 inch	100%
1/2 inch	60-70
No. 40	5-20

- End of Section -

SECTION 796

GEOSYNTHETICS

796.1 GENERAL:

This section defines the requirements for geosynthetic fabrics, grids and membranes typically used as pavement fabric beneath asphalt concrete overlays, filtration/drainage separation between soil/aggregate layers, erosion control filter/separators for riprap protection, and soil or base reinforcement to improve the stability of weak soils or reinforce aggregate bases.

796.2 MATERIALS AND REQUIREMENTS:

Identification, packaging, delivery, storage and handling of geosynthetic materials shall be in accordance with manufacturer's recommendations and ASTM D4873. Each roll shall be labeled or tagged to provide product identification sufficient to determine the product type, manufacturer, quantity, lot number, roll number date of manufacture, and shipping date.

Geosynthetic materials shall be inert to commonly encountered chemicals, resistant to rot and mildew, and shall have no tears or defects which adversely affect or alter its physical properties.

Geosynthetic materials shall be packaged with material that will protect the geosythetic (including ends of rolls) from damage due to shipment, water, sunlight and contaminates. During storage, geosynthetic materials shall be elevated off the ground and protected from the following: site construction damage, precipitation, extended ultraviolet radiation, strong acid or strong base chemicals, flames (including welding sparks), temperatures in excess of 160°F, and any other environmental condition that may damage geosynthetic material property values. Protection shall be in accordance with manufacturer’s specifications and shall be maintained during periods of shipment and storage.

Materials required for complete and proper installation of geosynthetic materials that are not specifically described herein (such as pins, nails, washers, etc.) shall conform to the manufacturer's recommendations and be as selected and supplied by Contractor subject to final approval by the Engineer.

Requirements represent minimum average roll values in the weaker principal direction. Average of test results from any sampled roll in a lot shall meet or exceed the minimum values noted herein. Lot sampling shall be in accordance with ASTM D4354.

796.2.1 Pavement: Pavement fabric geosynthetics are non-woven polyester or polypropylene fabrics that are field saturated with an asphalt binder and placed as an interlayer beneath a pavement overlay or between pavement layers. When placed, the fabric becomes an integral part of the roadway section, forming a barrier to water infiltration and absorbing stresses to reduce reflective and fatigue cracking of the new pavement surface layer.

Pavement fabric shall be constructed of at least 95 percent (by weight) nonwoven synthetic fibers of polyester or polypropylene, thermally bonded on one side. The fabric material shall additionally conform to the physical properties shown in Table 796-1.

TABLE 796-1

PAVEMENT GEOSYNTHETIC PROPERTIES

Property	Class A	Class B	Test Method
Weight: oz/yd^2	4.1 min.	4.0 min.	ASTM D3776
Grab tensile strength: lbs.	100 min.	90 min.	ASTM D4632
Elongation at break: %	50 min.	50 min.	ASTM D4632
Melting point: degree F	300 min.	300 min.	ASTM D276
Asphalt retention: gal/yd^2	0.25 min.(1)	0.20 min.	ASTM D6140

(1) May be reduced within street intersections, on steep grades or in other zones where vehicle braking is common, but not less than 0.20 gal/yd^2, when approved by the Engineer.

796.2.2 Filtration (Drainage) and Separation: Filtration and separation fabrics are nonwoven or woven polypropylene or polyester fabrics with specified strength characteristics used as permeable separators to restrain soil or other particles subjected

INDEX

Abbreviations and Definitions, 101-1
ABS Truss Pipe and Fittings, 744-1
Acceptance, 105-6
    Final Acceptance, 105-6
    Partial Acceptance, 105-6
Access to Property, 340-2
Actual Cost Work, 109-3
Addendum, 101-4
Adjusting Frames, Covers, Valve Boxes Meter Boxes and Pull Boxes, 345-1
    Frames, 345-1
    Manhole and Valve Covers, 345-1
    Valve Boxes, 345-1
    Water Meter Boxes, 610_6
Aggregate, 701-1
  Coarse, 701-1
  Fine, 701-1
    Mineral, 714-1
  Reclaimed Concrete Material, 701-1l
  Reclaimed Asphalt Pavement, 701-1
Aggregate Base , 310-2, 342-1, 350-2, 355-1, 601-4, 601-6, 702-1, 702-2, 728-1, 796-1, 796-2
Aggregate Paving
    Exposed, 343-1
Air Release and Vacuum Valves, 610-5, 630-1, 630-7
Air Test
    Sewer Lines, 615-3
Alley Entrances, 301-2, 336-1, 336-4, 340-1
Aluminum Handrails, 520-1
Anti-Stripping Agent, 710-2
Approval of
    Bonds and Insurance, 109-5
    Contract, 103-4
    Proposal, 102-1, 103-1
    Shop Drawings, 101-8, 105-1
    Subcontracts, 108-1
    Subletting, 108-1
    Substitutes, 106-2
Archaeological Reports, 107-1
Arizona Test Method, 101-4
Asbestos-Cement Pipe and Fittings for Storm Drain and Sanitary Sewer, 737-1
Asbestos-Cement Water Pipe and Fittings, 752-1
Asphalt
    Concrete, 710-1
    Emulsified, 333-1, 713-1
    Liquid, 320-1, 320-2, 321-5, 330-1, 330-2, 330-3, 711-1, 712-1, 712-2
    Milling, 317-1
    Paving, 711-1
    Rubber, 717-1
Asphalt Chip Seal, 330-1
Asphalt Concrete, 710-1
    Preservative Seal, 334-1, 718-1
Asphalt Concrete Pavement, 321-1
    Curbs, 324-2
Asphalt Distributing Equipment, 330-3
Asphalt Emulsion
    Slurry Seal Coat, 332-1
    Asphalt Pavement Core Bonding Materials, 708-1
Asphalt Milling, 317-1
Asphalt-Rubber Asphalt Concrete, 717-1
Assignment of
    Contract, 108-1
    Payments, 109-2
Authority of the
    Engineer, 109-5
    Inspector, 105-4
Award and Execution of Contract, 103-1
    Cancellation of, 103-1
    Execution, 103-1
    of Contract, 103-1
Backfill
    Structure, 206-1
Barricades and Warning Signs, 107-2
Base Materials, 702-1
Beginning Work, 108-1
Bench Marks, 105-4
Bid Guarantee
    Amount of, 103-1
    Forfeiture of, 103-4
    Proposal, 103-4
    Return of, 103-1
Bidding Requirements and Conditions, 102-1
    Disqualification, 102-3
    Eligibility and Preference, 102-1
    Successful, 102-3
Bidding Requirements and Conditions, 102-1
Bituminous Prime Coat, 315-1
Blasting
Discontinue 107-3
    Operations, 107-3
Bolts
    Anchor, 770-1
Bonds
    Acceptable to, 103-1
    Amount, 103-2
    Executed by, 103-2
    Proposal Guarantee, 103-1
    Requirement of, 103-1
Borrow Excavation, 210-1
    Local and Imported, 210-1
    Placing and Compacting, 210-1
Brick and Concrete Masonry Units (Blocks), 775-1
    Building, Facing and Manhole, 775-1
    Concrete Paving, 342-1
    Decorative Pavement, 342-1
Brick Masonry, 511-1
    Bricklaying, 511-1
    Curing, Grouting and Reinforcing, 511-1
Bridges

INDEX

Concrete, 505-1
Steel, 515-1
Cable
Installation, 360-1
Cancellation of
Award, 103-1
Contract, 108-3
Cast Iron Water Pipe, 750-1
Castings
Gray Iron, 787-1
Cast-in-Place Concrete Pipe, 620-1
Construction Methods, 620-1
Excavation, 620-1
Materials, 620-1
Methods of Tests, 620-3
Placement, 620-2
Catch Basins, 505-1, 601-2
Cement Concrete
Cement, 725-1
Cement Mortar and Grout, 776-1
Cement Treated Base, 312-1
Certificate of
Compliance or Analysis, 106-1
Insurance, 103-2
Weighmaster's, 109-1
Chain Link Fences, 420-1, 772-1
Change Order
Alteration of Work, 104-2, 109-2
Extension of Time, 108-3
Extra Work, 104-3, 109-3
Payment, 104-2
Unreasonable Circumstances, 109-7
Changed Conditions
Additional Compensation, 110-2
Additional Time, 110-2
Dispute Resolution, 110-1
Notification, 110-1
Channels
Open, 215-1
Chip Seal, 330-1
Application, 330-1
Materials, 330-1
Weather Conditions, 330-1
Chlorine
Disinfecting Water Mains, 611-2
City Sealer of Weights, 109-1
Classes, Grades and Types
Liquid Asphalt, 712-1
Pavement, 710-1
Paving Asphalts, 711-1
Clay Pipe Vitrified, 743-1
Clean Up
During Construction, 104-2
Final, 104-2
Clearing and Grubbing, 201-1
Coating Corrugated Metal Pipe and Arches, 760-1
Collusion
Evidence of, 107-1
Commencement, Prosecution and Progress, 108-1
Compensation for
Alteration of Work, 109-2
Change Orders, 104-2
Extra Work, 109-3
Concrete Block Masonry, 510-1
Concrete Crub, Gutter, Sidewalk, Sidewalk Ramps, Driveway and Alley Entrance, 340-1
Alley Entrance, 340-1
Asphalt, 710-1
Blocks, 775-1
Curb, 340-1
Curing Materials, 726-1
Driveway, 340-1
Gutter, 340-1
Masonry Units, 775-1
Non-Renforced Pipe, 736-1
Paving Stone or Brick, 342-1
Portland Cement, 725-1
Pressure Pipe, 758-1
Sidewalk, 340-1
Sidewalk Ramps, 340-1
Concrete Block Masonry, 510-1
Construction, 510-1
Curing, 510-2
Mortar and Grout, 510-2
Reinforcing, 510-1
Tests, 776-2
Concrete Curing Materials, 726-1
Concrete Pipe
Cast-in-Place, 505-12 , 620-1,
Lining, 741-1
Non-Reinforced Concrete, 736-1
Reinforced, 735-1
Concrete Pressure Pipe-Steel Cylinder Type, 758-1
Concrete Structures, 505-1
Concrete Deposited Underwater, 505-9
Curing, 505-9
Dimensional Tolerances, 505-12
Falsework, 505-3
Finishing Concrete, 505-10
Forms, 505-1
Placing Concrete, 505-6
Placing Reinforcement, 505-4
Subgrade, 505-1
Conformity with Plans and Specifications, 105-2
Construction
Cleanup and Dust Control, 104-2
Contractor's Schedule, 108-1
Fill, 211-1
Maintenance During, 105-5
Manhole, 625-1
Reclaimed Water Line, 616-1
Riprap, 220-1

Stakes, Lines and Grades, 105-4
Storm Drain, 618-1
Contract
Approval, 103-4
Assignment, 109-2
Award and Execution of, 103-1
Bonds Requirement, 103-1
Execution, 103-4
Failure to Complete, 108-4
Failure to Execute, 103-4
Final Acceptance, 105-6
Final Payment, 109-6
Insurance, 103-2
Labor Requirements, 107-1, 108-2
Partial Acceptance, 105-6
Partial Payments, 109-5
Subletting of, 108-1
Termination, 108-5
Time Extension, 108-3
Time of Completion, 108-1
Contractor's
Accident Prevention Requirements, 107-3
Construction Schedule, 108-1
Correspondence to, 108-1
Default, 108-5
Eligibility and Preference, 102-1
Examine Site Prior to Bidding, 102-1
Liability, 103-2, 103-3
Marshaling Yard, 107-2
Notice to Proceed, 108-1
Notify Public Utilities, 105-3, 107-5
Personnel and Equipment, 108-2
Requested Changes, 104-2
Responsibilities, 107-5,
Superintendent, 105-2, 105-5
Control of Work, 105-1
Control of Materials, 106-1
Work, 105-1
Controlled Low Strength Material, 728-1
Mixtures and Production Tolerances, 728-1
Payment, 604-2
Performance Testing, 604-2
Placement of, 604-1
Cooper Pipe, Tubing and Fittings, 754-1
Cooperation
Between Contractors, 105-4
with Utilities, 105-3
Coordination of Plans and Specifications, 105-2
Corrugated Metal Pipe and Arches, 621-1
Coating, 760-1
Installation, 621-1
Test Specimens, 621-2
Cover Material, 716-1
Crack Sealing, 337-1
Application, 337-1
Cleaning and Preparing Cracks or Joints, 337-2
Equipment, 337-1
Materials, 337-1
Opening to Traffic, 337-2
Pavement Temperatures, 337-2
Curbs
Concrete, 340-1
Precast Safety, 410-1
Curing
Cast-in-Place Concrete Pipe, 620-2
Concrete block Masonry, 511-1
Concrete Curbs, Gutters and Sidewalks, 340-3
Concrete Structures, 505-7, 505-9
Gunite, 525-2
Materials, 726-1
Precast Prestressed Concrete Members, 506-1
Damages
Liquidated, 108-4
Decomposed Granite, 430-2, 795-2
Decorative Pavement Concrete Paving Stone or Brick, 342-1
Decreased Quantities, 109-1, 610-8
Definitions, 101-1
Definitions and Terms, 101-4
Delays
Asbestos, 107-2
Between Contractor's, 105-4
Beyond the Control of Contractor, 108-3
Contracting Agency, 108-4
Extension of Time, 108-3
Utility Owners, 105-3
Discontinue Blasting, 107-3
Disinfecting Water Mains, 611-1
Application of Liquid Chlorine, 611-2
Chlorinating Valves and Hydrants, 611-3
Chlorine Residual, 611-2
Chlorine-Bearing Compounds in Water, 611-2
Cleaning and Treating Pipe, 611-1
Final Flushing, Sampling and Testing, 611-3
Flushing Completed Pipe Lines, 611-1
Laying Pipe, 611-1
Methods of Applying Chlorine, 611-2
Packing Material, 611-1
Point of Application, 611-2
Preventing Reverse Flow, 611-3
Preventing Trench Water from Entering Pipe, 611-1
Rate of Application, 611-3
Repetition of Chlorination Procedure, 611-4
Retention Period, 611-3
Disposal of Surplus Material, 205-2
Dispute Resolution, 110-1
Administrative Process, 110-2
Amount of Dispute, 110-4
Arbitration, 110-4
Dispute Review Board, 110-4
Final Documentation, 110-5

Mediation, 110-3
Disqualification of Bidders, 102-3
Drawings
Shop, 105-1
Driveways
Access, 107-4, 340-2, 401-1
Drop Sewer Connections, 625-1
Dry Barrel/Fire Hydrants, 756-1
Ductile Iron Water Pipe, 750-1
Dust Control, 230-1
Dust Palliative, 792-1
Dust Palliative Application, 230-1
Application, 230-3, 792-1
Curing, 230-3
Deficiencies and Warranty, 230-4
Environmental Criteria, 792-4
Materials, 792-1
Measurement, 230-4
Performance Standards and Test Methods, 792-3
Quality Control, 230-4
Weather Conditions, 230-3
Duties of Inspector, 105-4
Earthwork for Open Channels, 215-1
Excavation, 215-1
Fill and Backfill, 215-2
for Open Channels, 215-1
Grading, 215-2
Stripping, 215-1
Eligibility of Contractor, 102-1
Emergency
Contractor's Representative, 105-2
Defects, 108-3
Services for Public, 104-1
Emulsified Asphalt Materials, 713-1
Engineer
Authority of, 105-1
Decisions, 105-1
Suspension of Work, 104-2, 108-3
Equipment
Approval of, 106-2
Asphalt Distributors, 330-3
Rental Rate, 109-4
Storage of, 106-2
Examination of
Plans, 102-1
Site of Work, 102-1
Special Provisions,102-1
Excavation
Borrow, 210-1
Roadway, 205-1
Structure, 206-1
Trenches, Backfilling, and Compaction 601-1
Execution of Contract, 103-4
Exfiltration Test, Sewer Lines, 615-2, 610.8
Existing Improvements
Removal of, 350-1
Expansion Joint Filler, 729-1
Application, 729-2
Pour Type, 729-1
Premolded, 729-1
Test Report and Shipment Certificate, 729-2
Explosives
Discontinue use of, 107-3
Use of, 107-3
Exposed Aggregate Paving, 343-1
Extension of Time, 108-3
Extra Work
Actual Cost, 109-3
Claims for, 104-3
Extruded
Galvanized Pipe, 753-1
Polyethylene Pipe, 755-1
Failure to
Complete on Time, 108-4
Execute Contract, 103-4, 108-5
Maintain Construction, Roadway or Structure, 105-5
Federal Aid Projects, 401-2
Fence
Chain, 772-1
Fill Construction, 211-1
Compacting, 211-1
Placing, 211-1
Tests, 211-2
Final
Acceptance, 105-5, 105-6
Cleaning Up, 104-2
Inspection, 105-6
Fire Hydrants, 756-1
Installation, 756-2
Fittings, ABS Truss 744-1
Flagmen or Pilot Cars, 401-1
Flexible Metal Guardrail, 415-1
Fog Seal Coats, 333-1
Application, 333-1
Asphalt Emulsion Application, 333-1
Materials, 333-1
Preparation of Surfaces, 333-1
Protection for Adjacent Property, 333-2
Protection of Treated Surface, 333-2
Sand Blotter, 333-1, 701-1
Test Reports and Certification, 333-1
Weather Conditions, 333-1
Forfeiture of
Contract, 108-5
Proposal Guarantees, 103-4
Foundation Data
Test Holes, 601-6
Foundation Material Treatment, 206-1
Furnished Materials, 106-3
Galvanized Pipe and Fittings, 753-1

INDEX

Galvanizing, 771-1
Geogrid Reinforcement, 306-1
    Placement, 306-1
    Placing and Compacting Aggregate Fill, 306-2
    Repair, 306-2
Geosynthetic, 796-1
    Requirements, 796-1
    Test and Certification Requirements, 796-3
Grade
    Trench, 601-1
Grading
    Crushed Aggregate, 702-2
    Earthwork for Open Channels, 215-2
    Parkway, 424-1
    Paving Asphalt, 711-1
    Subgrade, 605-1
    Under Pavements, 301-2
Granular Material, 601-6
Gray Iron Castings, 787-1
Ground Water, 102-1, 505-1
Grout
    Bonding, 506-5
    Concrete Block Masonry, 510-2
    Masonry Mortar, 776-1
    Reinforced Brick Masonry, 511-1
Grubbing and Clearing, 201-1
Guarantee
    Bid, 102-2
    Forfeiture of, 103-4
    Proposal, 102-2
    Provisions, 108-3
    Return of, 103-1
    Workmanship and Materials, 108-3
Guardrail, Flexible Metal 415-1
Gutter, 340-1
Handrail
    Aluminum and Steel, 520-1
Health, Safety and Sanitation, 107-1
High Density Polyethylene Pipe and Fittings for
    Storm Drain and Sanitary Sewer, 738-1
Holes
    Tests, 601-6, 603-2
Hot In-Place Recycling, 327-1
Hydrants, Fire, 610-5, 756-1
    Installation, 610-4
    Types, 756-1
    Working Around, 107-5
Inspection
    of Materials, 106-1
    of Plant, 106-1
    of Trees and Shrubs, 430-2
    of Work, 105-5
    Section to be Notified, 108-1
Inspector
    Authority of, 105-5
    Duties of, 105-4
Installation of High Density Polyethylene Pipe, 603-1
    Cable, 360-1
    High Density Polyethylene Pipe, 603-2
    Monuments, 405-1
    Sprinkler Irrigation System, 440-2
    Telecommunications, 360-1
Insurance
    Approval of, 103-2
    Contractor's, 103-2
    Damage Claims, 103-2
    Fire and Extended Coverage, 103-3
    Property Damage, 103-2
    Public Liability, 103-2
    Worker's Compensation, 103-2
Iron Water Pipe and Fittings, 750-1
    Cast Iron, 750-1
    Ductile Iron, 750-1
Irregular Proposals, 102-2
Irrigation Structures, 350-2
Jacked Steel Casing, 602-1
Jetting
    for Settling Trench Backfill, 601-5
Joint Filler, 729-1
Joints
    Cast-in-Place Concrete Pipe, Stoppage, 620-2
    Concrete Structures, 505-7
    Concrete, Curb, Gutter and Sidewalks, 340-2
    Corrugated Metal Pipe, 621-1
    High Density Polyethylene Pipe, 738-1
    Iron Water Pipe, 750-1
    Mortar, Brick, 511-1
    Mortar,Concrete Block, 510-1
    Non-Reinforced Concrete Pipe, 736-1
    Pneumatically Placed Mortar, 525-2
    Portland Cement Concrete, 324-5
    Reinforced Concrete Pipe, 735-1
    Sewer Lines, 615-2
    Subdrainage Systems, 605-1
    Vitrified Clay Pipe, 615-2
    Water Lines, 610-7
Labor and Materials
    Payment Bond, 103-2
Labor Requirements, 107-1, 108-2
Laboratory Tests, 106-1
Landscape and Property Protection and Restoration,
    107-3
Landscaping and Planting, 430-1
    and Planting, 430-2, 795-2
    Landscape Materials, 795-1
Laws
    Contractor's Responsibility to Observe, 107-4
Legal Regulations and Responsibility to Public, 107-1
Legal Rights
    No Waiver of, 107-5
Lime Slurry Stabilization or Modification of
    Subgrade, 309-1

INDEX

Limitation of Operations, 108-2
Lining for Reinforced Concrete Sanitary Sewer Pipe, 741-1
Installation, 741-1
Sanitary Sewer Pipe, 741-1
Testing and Repairing, 741-3
Liquid Asphalt, 712-1
Liquidated Damages, 108-4
Location of Underground Utilities
Expose All Underground Utilities, 107-5
Notify Utility Companies, 105-2, 107-1
Protection Thereof, 107-4
That Differ From Those Shown, 105-3
Lumber, 778-1
Maintenance
During Construction, 105-5
of Traffic, 104-1
Unsatisfactory, 105-2, 105-5
Manhole Construction and Drop Sewer Connection, 625-1
Marshaling Yard, 107-2
Marshall Mix Design, 710-3
Masonry Mortar and Grout, 776-1
Materials
Approval, 108-1
Control of, 106-1
Equal, 106-2
Furnished, 106-3
Handling, 106-3
Landscape, 795-1
Payment of, 109-4
New and Unused, 106-1
Patented, 106-2
Quality, 106-1
Reasonably Acceptable, 105-2
Rejection, 105-5, 106-1
Samples and Tests, 106-1
Source of, 106-1
Storage of, 106-2
Substitutions, 106-2
Unacceptable, 106-3
Measurements and Payments, 109-1
Actual Cost Work, 109-3
Assignment of Payments, 109-2
Compensation for Alteration of Work, 109-2
Dollar Value of Major Item, 109-7
Payment, Scope of, 109-1
Payment for Bond Issue and Budget Projects, 109-5
Payment for Delay, 109-7
Payment for Improvement District Projects, 109-5
Payment for Mobilization/Demobilization, 109-7
Quantities, 109-1
Mechanically Stablilized Subgrade-Geogrid Reinforcment, 306-1
Meter Services Connections
Water, 631-1
Methods and Equipment, 108-2
Microsurfacing Materials, 714-1
Microsurfacing Specification, 331-1
Application, 331-4
Microsurfacing Specifications, 331-1
Equipment, 331-2
Mix Design, 331-1
Proportioning, 331-1
Testing, 331-2
Mill Reports
Steel Reinforcement, 727-1
Structural Steel, 515-1
Handrails, Steel and Aluminum, 520-1
Mineral
Filler, 714-1
Mineral Admixture, 710-2
Modification of Subgrade, 306-1
Monthly Payments, 109-6
Monuments, 405-1
Construction, 405-1
Installation, 405-1
Protection, 107-3
Name Stamped in Concrete, 340-3
Noise, 107-2
Non-Reinforced Concrete Pipe, 736-1
Care of Pipe and Materials, 736-2
Curves, Bends and Closures, 736-1
Materials, 736-1
Pipe Joints, 736-1
Tests, 736-2
Notice
Award of, 103-1
to Contractor, 108-1
to Engineer, 104-3, 105-2
to Proceed, 108-1
Notification of Changed Conditions and Dispute Resolution, 110-1
Administrative Process for Dispute Resolution, 110-2
Arbitration, 110-4
Dispute Resolution, 110-1
Dispute Review Board, 110-4
Final Documentation, 110-5
Initial Notification, 110-1
Notify
Inspection Section, 108-1
Survey Section, 105-4, 108-1
Occupational Safety and Health Act, 107-1
Open Channels, Earthwork, 215-1
Open Trench, 601-3
Opening Sections to Traffic, 104-3, 108-2
or Equal, Substitutions, 106-2
Overtime
Contractor, 108-2

INDEX

Paint, 790-1
Painting, 530-1
Application, 530-1
Surface Preparation, 530-2
Testing, 530-3
Weather Conditions, 530-1
Parkway Grading, 424-1
Partial Payments, 109-5
Partial Use or Occupancy, 105-6
Patented Devices, Materials and Processes, 107-1
Pavement
Asphalt Concrete, 321-1, 711-1
Decorative, 342-1
Exposed Aggregate 343-1
Geosynthetics, 796-1
Portland Cement Concrete, 324-1
Replacement, 603-2
Sewer Line, 615-4
Pavement Matching and Surfacing Replacement, 336-1
Paving Asphalt, 711-1
Temperatures, 711-1
Test Report and Certification, 711-2
Payments
Actual Cost Work, 109-3
Assignments, 109-2
Final, 109-6
for Delay, 109-7
Improvement District Projects, 109-5
Mobilization/Demobilization, 109-7
Partial, 109-5
Scope of, 109-1
Permits, 107-1
Pilot Cars or Flagman, 401-1
Pipe
Cast-in-Place Curing and Backfill, 620-2
Pipe Installation for
Sewer Lines, 615-1
Sprinkler Irrigation System,440-2
Storm Sewers, 618-1
Subdrainage, 605-1
Water Lines, 610-1
Placement and Construction of Aggregate Base Course, 310-1
Placement and Construction of Asphalt Concrete Pavement, 321-1
Acceptance, 321-6
Application of Tack Coat, 321-1
Materials and Manufacture, 321-1
Measurement, 321-12
Mix Design, 321-1
Mix Production, 321-2
Placement, 321-3
Quality Control, 321-6
Referee, 321-12
Transportation, 321-3
Weather and Moisture Conditions, 321-1
Placement and Construction of Asphalt Emulsion Slurry Seal Coat, 332-1
Equipment, 332-1
Mixing and Application, 332-2
Preparation of the Surface, 332-1
Protection of Uncured Surface, 332-2
Rolling, 332-2
Weather Limitations, 332-2
Placement and Construction of Asphalt-Rubber Asphalt Concrete, 325-1
Acceptance, 325-5
Application of Tack Coat, 325-2
Materials, 325-1
Mix Production, 325-2
Placement, 325-3
Quality Control, 325-4
Transportation, 325-3
Weather and Moisture Conditions, 325-1
Placement, Construction. of Cement Treated Subgrade, 311-1
Construction Methods, 311-1
Equipment, 311-1
Materials, 311-1
Placement, Construct.of Hot Asphalt-Rubber Seal, 335-1
Construction, 335-1
Equipment, 335-1
Materials, 335-1
Measurement, 335-2
Mixing, 335-1
Placement of Controlled Low Strength Material, 604-1
Plans
Materials 604-1
Performance Testing 604-2
Placement 604-1
Planting
and Landscaping, 430-1
Pneumatically Placed Mortar, 525-1
Curing, 525-2
Dry Mix Process, 525-1
Equipment, 525-2
Finishing, 525-2
Forms and Ground Wires, 525-2
Joints, 525-2
Reinforcing Steel, 525-1
Surface Preparation, 525-2
Testing, 525-2
Wet Process, 525-1
Polyethylene Pipe
High Density, 603-1, 738-1
Installing, 603-2
Polypropylene Pipe & Fittings for Gravity Storm Drain & Sanitary Sewer, 740-1
Polypropylene Pipe and Fittings for Storm Drain,

INDEX

Irrigation and Sanitary Sewer, 740-1
Polyethylene Pipe for Water Distribution, 755-1
Portland Cement Concrete Street Pavement, 324-1
Portland Cement Concrete, 725-1
Pavement, 324-1
Portland Cement Treated Base, 705-1
Power of Attorney, 103-2
Precast Prestressed Concrete Members, 506-1
Anchorages and Distribution, 506-3
Bonding and Grouting, 506-5
Concrete, 506-1
Enclosures, 506-3
Handling, 506-6
Prestressing, 506-4
Prestressing Steel, 506-2
Samples for Testing, 506-5
Precast Safety Curbs, 410-1
Precoated Chip Seal
Asphalt Grade, 330-2
Construction Methods, 330-1
Temperatures, 330-2
Preservative Seal for Asphalt Concrete 334-1, 718-1
Preservatives
Prime Coat, 756-1
Wood, 779-1
Property and Landscape Protection and Restoration, 107-3
Property Marks and Monuments, 107-3
Proposal
Addenda, 102-2
Consideration of, 103-1
Disqualified Bidders 102-3
Irregular, 102-2
Preparation, 102-2
Public Opening, 102-3
Rejected, 102-2
Revision of, 102-3
Submission of, 102-3
Successful Bidders 102-3
Withdrawal of, 102-3
Proposal Guarantee
Amount, 103-2
Forfeiture of, 102-2, 103-4
Return of, 103-1
Public
Convenience, 107-2
Property,107-1
Safety, 107-2
Public Officials
Personal Liability of, 107-5
PVC Sewer Pipe and Fittings, 745-1
Quantities
in Proposal, 102-1
Increase or Decrease, 109-3
Measurement of, 109-1
Payment, 109-5
Reclaimed Water Line Construction, 616-1
Above Ground Pipe, 616-2
Below Ground Pipe, 616-2
Identification, 616-1
Installation, 616-1
Valve and Manhole Covers, 616-3
Valves and Risers, 616-2
Reinforced Concrete Pipe, 735-1
Acceptance Mark, 735-4
Curing of Pipe, 735-2
Curves, Bends and Closures, 735-1
Downgrading of Pipe, 735-4
Manufacturer's Qualifications, Equipment Require., 735-2
Materials, 735-1
Quality, 735-1
Sanitary Sewer Pipe, 735-4
Tests and Acceptance, 735-2
Reinforcing Steel, 727-1
Rejected Materials, 106-1
Removal of
Defective Materials, 105-5
Salvage Items, 201-2
Unacceptable Work, 105-5
Unauthorized Work, 105-5
Removal of Existing Improvements, 350-1
Rental Equipment, 109-2
Reports
Archaeological, 107-1
Blasting Survey, 107-3
Extra Work, 109-3
Final Payments, 109-6
Partial Payments, 109-5
Site Conditions, 109-3
Responsibility, Contractor's, 107-5
Retaining Walls, 505-1
Revision of Proposal, 102-3
Right-of-Way
and Traffic Control, 401-1
Railroad, 105-3
Riprap, 703-1
Riprap Construction, 220-1
Rivets, 770-1
Road-Mixed Surfacing, 320-1
Application of Liquid Asphalt, 320-1
Materials, 320-1
Mixing, 320-1
Prime Coat, 320-1
Spreading Aggregate, 320-1
Spreading and Compaction, 320-2
Roadway Excavation, 205-1
Overshooting, 205-1
Slides and Slipouts, 205-1
Slopes, 205-1
Surplus Material, 205-2

Unsuitable Material, 205-2
Roadway, Failure to Maintain, 105-5
Rolling, Pavements
Chip Seal, 330-2
Temporary, 336-2
Rubber, Asphalt, 717-1
Rubber Gaskets, 735-2, 736-1, 738-1, 745-1
Safety and Public Convenience, 107-2
Curbs, 410-1
Employees, 107-1
for Workman, 105-1
Health and Sanitation, 107-1
OSHA, 336-3
Public, 107-2
Samples and Tests of Material, 106-1
Sand, 324-1, 333-1, 342-1, 342-2
Sanitary Conditions, 107-1
Sanitary Sewer
Fittings for, 738-2
Saw Cut
Pavement, 336-1
Portland Cement Concrete, 324-1
Schedule, Construction, 108-1
Scope of Work, 104-1
Seal Coats
Fog, 333-1
Sewer Line Construction, 615-1
Air Test, 615-3
Exfiltration Testing, 615-3
Fittings, 615-2
Jointing, 615-2
Laying Pipe, 615-1
Sanitary Sewer Cleanouts, 615-2
Sanitary Sewer Service Taps, 615-2
Separation, 615-1
Testing, 615-2
Trenching, 615-1
Sewer Connections, 625-1
Sewer Pipe
Fittings for, 745-1
Shop Drawings
Approved by, 105-1
Cost of, 105-1
Sidewalk, 340-1
Sidewalk Ramps, 340-1
Signs
Barricades and Warning, 107-2
Blasting Operations, 107-3
Site of Work
Clean up, 104-2
Examination, 102-1
Slurry Seal Materials, 715-1
Source of Materials and Quality, 106-1
Specifications
Conformity with, 105-2
Coordination with, 105-2
Examination, 102-1
Sprinkler Irrigation System, 757-1
Sprinkler Irrigation System Installation, 440-1
Stakes, Construction, 105-4
State Inspector of Weights, 109-1
Steel and Aluminum Handrails, 520-1
Steel Pipe, 759-1
Steel Plates for Street Crossings, 601-3
Steel Reinforced Polyethylene Pipe and Fittings for Storm Drain, Irrigation and Sanitary Sewer, 739-1
Steel Reinforcement, 727-1
Wire Mesh Reinforcement, 727-1
Wire Reinforcement, 727-1
Wire Ties, 727-1
Steel Structures, 515-1
Buildings, 515-1
Computed Weights, 515-2
Painting, 515-3
Workmanship, 515-2
Stone
Concrete Paving, 342-1
Storage of
Equipment, 106-2
Explosive,107-3
Materials, 106-2
Paid Materials, 109-6
Storm Drain
Fittings for, 738-1
Storm Drain Construction, 618-1
Construction Methods, 618-1
Jacking Pipe, 618-2
Video Inspection of New Mainline Storm Drains, 618-3
Structural and Rivet Steel, Rivets, Bolts, Pins, and Anchor Bolts, 770-1
Structural Plate Pipe, Arches, and Pipe Arches, 761-1
Structure Excavation and Backfill, 206-1
Foundation Material Treatment, 206-1
Inspection, 206-1
Structure, Failure to Maintain, 105-5
Structures
Concrete, 505-1
Steel, 515-1
Subconractor's
List of, When Required, 102-2
Subcontractor's
Eligibility and Preference, 102-1
Employment of Labor, 108-1
Insurance, 103-2
Personnel, 108-2
Subcontracts
Approval of, 108-1
in Accordance With, 108-1
Liability, 108-1
Subdrainage, 605-1

Filter Material, 605-1
Pipe, 605-1
Placement, 605-2
Tests, 605-2
Subgrade Preparation, 301-1
Curbs, Drive., Gutters, Sidewalks, Sidewalk Ramps, 340-1
Grading of Areas Not to Be Paved, 301-2
Preparation, 301-1
Protection of Existing Facilities, 301-2
Relative Compaction, 301-1
Tolerances, 301-1
Substitutions, 106-2
Surety, Power of Attorney, 103-2
Survey
Monuments, 405-1
Section to be Notified, 108-1
Suspend the Work, 104-2, 105-1, 108-3
Tack Coat, 329-1
Equipment, 329-1
Preparation of Surface, 329-1
Protection for Adjacent Property, 329-1, 333-2
Tapping Sleeves and Valves and Valve Boxes on Water Lines, 630-1
Air Release and Vacuum Valves, 630-7
Butterfly Valves, 630-5
Gate Valves, 630-1
Telecommunications Installation, 360-1
Cable Installation, 360-1
Cable Locating (Fiber Optic), 360-1
Temperatures
Asphalt, Paving, 711-1
Emulsified Asphalts, 330-2
Expansion Joint Filler, 729-1
Liquid Asphalts, 330-2
Temporary Pavement Replacement, 336-2
Termination of Contract, 108-5
Testing
ABS Trust Pipe and Fittings, 744-2
Asbestos-Cement Pipe, 737-2, 752-1
Asphalt Pavement Core Bonding Material, 708-1
Cast-in-Place Concrete Pipe, 620-3
Concrete Block Masonry, 776-2
Controlled Low Strength Material, 604-2
Dust Palliative Performance, 792-3
Fill Construction, 211-2
Final Flushing Water Mains, 611-3
Fog Seal Coats, 333-1
Galvanized Materials, 771-1
Geosynthetic, 796-3
Gray Iron Castings, 787-1
Holes, 601-6, 603-2
Lining for Concrete Pipe, 741-3
Liquid Asphalt, 712-1
Microsurfacing Specifications, 331-2
Non-Reinforced Concrete Pipe, 736-2
Painting, 530-3
Pavement Asphalts, 711-1
Pneumatically Placed Mortar, 525-2
Polyethylene Pipe, 755-1
Precast Prestressed Concrete, 506-5
Reinforced Concrete Pipe, 735-2
Samples of Materials, 106-1
Sewer Lines, 615-2
Sprinkler Irrigation System,440-4
Subdrainage System, 605-2
Vitrified Clay Pipe, 743-1
Water Lines, 610-8
Water Taps and Meter Service Connections, 631-2
Topsoils, 425-1, 795-1
Trade Names and Substitutions, 106-2
Traffic Control, 401-1
Barricade Manual, 401-1
Control Devices 401-1
Control Measures, 401-1
Flagmen or Pilot Cars, 401-1
General Traffic Regulations, 401-1
Maintenance, 430-2
Tree and Shrub Planting, 430-2
Trench Excavation, Backfilling and Compaction, 601-1
Contractor Certification of Installation Procedures, 601-6
Densities, 601-5
Excavation, 601-1
Foundation, Bedding, Backfilling and Compaction, 601-4
Trench, 601-3
Pavement Replacement, 601-7
Protection of Existing Utilities, 601-3
Surface Restoration, 601-7
Trench Widths, 601-1
Truss Pipe, 744-1
Trenchless Installation of Steel Casing, 602-1
Tunneled Steel Liner Plate, 602-1
Tunneling Operations, 602-2
Unacceptable
Materials, 106-3
Work, 105-5
Uniformed Off-Duty Law Enforcement Officer, 401-1
Use or Occupy, 105-6
Utilities
Cooperation with, 105-3
Moved by the Owners, 105-3
Notify Before Blasting, 107-3
Protection of, 107-3
Utility Potholes Keyhold Method, 355-1
Backfill and Compaction, 355-1
Deficiencies, 355-2
Excavation, 355-1
Pavement Restoration, 355-2

INDEX

Surface Tolerances, 355-2
Valves
Air Release and Vacuum, 630-7
Butterfly, 630-5
Gate, 630-1
Tapping, 630-2
Vitrified Clay Pipe, 743-1
Warranties, 108-3
Water Line Construction, 610-1
Blocking, 610-8
Cleanup, 610-9
Connection to Existing Mains, 610-5
Construction Methods, 610-1
Couplings, Joints, Gaskets and Flanges, 610-7
Disinfecting, 610-9
Fire Hydrants, 610-5
Fire Line Service Connections, 610-6
Manholes and Vaults, 610-5
Meter Service Connections, 610-6
Polyethylene Corrosion Protection, 610-4
Separation, 610-2
Testing, 610-8
Valve Boxes on Water Lines, 630-1
Valves, 610-5
Water Taps and Meter Service Connections, 631-1
Weather
Asphalt Chip Seal Coat, 330-1
Concrete Structures, 505-7
Dust Palliative, 230-3
Fog Seal Coat, 333-1
Microsurfacing Specifications, 331-4
Painting, 530-1
Weighmaster's Certificate, 109-1
Wire Reinforcement, 727-1
Withholding Assignments, 109-2
Wood Preservatives, 779-1
Field Treatment of Cut Surfaces, 779-1
Oil Type Preservative Treatment, 779-1
Water Borne Salt Preservatives Treatment, 779-1
Work
Actual Cost, 109-3
Alteration of, 104-2
Compensation for Alteration, 109-2
Contractor's Responsibility, 107-4
Control of work, 105-1
Emergency 104-1
Extra, 104-3
Final Acceptance, 105-5
Hours, 109-5
Inspection of, 105-5
Overtime, 108-2
Rejected, 106-2
Scope of, 104-1
Suspension of, 104-2,
to be Done, 104-1
Unacceptable, 105-5
Unauthorized, 105-5
Weekend or Holiday, 108-2, 108-3
Workmen
Character of, 108-2
Compensation Insurance, 103-3
Safety, 105-1
Suspend 105-1

This Page is Reserved for Future Use

UNIFORM STANDARD DETAILS for PUBLIC WORKS CONSTRUCTION

SPONSORED and DISTRIBUTED by the

MARICOPA ASSOCIATION of GOVERNMENTS

2012 EDITION

ARIZONA

(Includes 2014 revisions)

100 SERIES: GENERAL INFORMATION

Detail	Revised	Title
101	2011	GENERAL INFORMATION
110-1	2011	PLAN SYMBOLS (SYMBOLS)
110-2	2011	PLAN SYMBOLS (LINE TYPES)
112	1998	DIMENSIONING FOR ROAD IMPROVEMENT PLANS
120	2014*	SURVEY MARKER
122	2011	PAVEMENT MARKER FOR FIRE HYDRANTS
130	2003	BARRICADES
131	1998	STREET SIGN BASE
140	2009	BOLLARD
141	2009	HAZARD MARKER
145	2011	SAFETY RAIL
150	1998	PRECAST SAFETY CURB
160	2013	6' CHAIN LINK FENCE AND GATE

200 SERIES: STREET INFORMATION

Detail	Revised	Title
200-1	2010	BACKFILL, PAVEMENT AND SURFACE REPLACEMENT
200-2	2010	BACKFILL, PAVEMENT AND SURFACE REPLACEMENT
201	2014*	ASPHALT PAVEMENT EDGE DETAILS
202	1998	ALLEY DETAILS (PAVED AND UNPAVED)
203	1998	SCUPPERS
204	1998	EQUIPMENT CROSSING
205	2006	PAVED TURNOUTS
206-1	2007	CONCRETE SCUPPER
206-2	2007	CONCRETE SCUPPER
206-3	2007	CONCRETE SCUPPER (ISOMETRIC VIEW) RESIDENTIAL
210	2012	SPEED HUMP
211	1998	STANDARD TRENCH PLATING DETAIL
212	2012	UTILITY POTHOLE REPAIR
220-1	2007	CURB AND GUTTER TYPES A, B, C AND D
220-2	2007	CURB AND GUTTER TYPES E AND F
221	2014*	CURB AND GUTTER TRANSITION TYPE A TO TYPE C, INTEGRAL ROLL CURB, GUTTER AND SIDEWALK SINGLE
222	2008	CURB - TYPES A, B AND TERMINATION
223	1998	MEDIAN NOSE TRANSITION
224	1998	JOINT FOR DRAINAGE INLETS AND MANHOLE COVERS
225	2005	CONCRETE PAVERS
230	2014*	SIDEWALKS
234	2012	CURB MODIFICATION AT DETECTABLE WARNING
235-1	2012	CURB RAMPS (TYPE A)
235-2	2012	CURB RAMPS (TYPE B)
235-3	2012	CURB RAMPS (TYPE C)
235-4	2011	CURB RAMPS (TYPE D)
235-5	2011	CURB RAMPS (TYPE E)

200 SERIES: STREET INFORMATION (CONTINUED)

Detail	Revised	Title
240	2010	VALLEY GUTTER
250-1	2014*	DRIVEWAY ENTRANCES WITH DETACHED SIDEWALK
250-2	2013	DRIVEWAY ENTRANCES WITH SIDEWALK ATTACHED TO CURB
251	2003	RETURN TYPE DRIVEWAYS
252	2005	BUS BAYS
260	2013	ALLEY ENTRANCE (WITH VERTICAL CURB AND GUTTER)
262	2012	WING TYPE ALLEY ENTRANCE (WITH COMBINED CURB AND GUTTER)
263	2002	WING TYPE ALLEY ENTRANCE (WITH ROLL TYPE CURB AND GUTTER)
270	2014*	FRAME AND COVER (AND GRADE ADJUSTMENTS)

300 SERIES: WATER INFORMATION

Detail	Revised	Title
301	1998	BLOCKING FOR WATER GATE AND BUTTERFLY VALVES
302-1	1998	JOINT RESTRAINT WITH TIE RODS (DRAWING)
302-2	1998	JOINT RESTRAINT WITH TIE RODS (NOTES)
303-1	1998	JOINT RESTRAINT FOR DUCTILE IRON AND POLYETHYLENE WRAPPED DUCTILE IRON WATER PIPES (DRAWING)
303-2	1998	JOINT RESTRAINT FOR DUCTILE IRON AND POLYETHYLENE WRAPPED DUCTILE IRON WATER PIPES (TABLES)
310	1998	CAST IRON WATER METER BOX COVER NO. 1
311	1998	CAST IRON WATER METER BOX COVER NO. 2
312	1998	CAST IRON WATER METER BOX COVER NO. 3
313	1998	CAST IRON WATER METER BOX COVER NO. 4
314	1998	CAST IRON WATER METER BOX COVER NO. 5
320	1998	CONCRETE WATER METER BOXES
321	1998	STANDARD WATER METER VAULT
340	2002	INSTALLING TAPPING SLEEVES AND VALVES
342	1998	CONCRETE PRESSURE PIPE TAPPING SLEEVE
345-1	1998	3", 4", 6" WATER METER
345-2	1998	4", 6" WATER METER WITH ON-SITE HYDRANTS
346	1998	FIRE LINE DETECTOR CHECK VAULT
360-1	2013	DRY BARREL FIRE HYDRANT INSTALLATION
360-2	2013	WET BARREL FIRE HYDRANT INSTALLATION
360-3	2013	FIRE HYDRANT INSTALLATION DETAILS
362	1999	LOCATIONS FOR NEW FIRE HYDRANTS
370	1998	VERTICAL REALIGNMENT OF WATER MAINS
380	1998	THRUST BLOCKS FOR WATER LINES
381	1998	ANCHOR BLOCKS FOR VERTICAL BENDS
389	2001	CURB STOP WITH VALVE BOX AND COVER
390	1998	CURB STOP WITH FLUSHING PIPE
391-1	2014*	VALVE BOX INSTALLATION AND GRADE ADJUSTMENT
391-2	2001	VALVE BOX INSTALLATION AND GRADE ADJUSTMENT
392	2001	DEBRIS CAP INSTALLATION

* NEWLY REVISED.

400 SERIES: SEWER INFORMATION

Detail	Revised	Title
403-1	1998	PIPE SUPPORT ACROSS TRENCHES
403-2	1998	PIPE SUPPORT ACROSS TRENCHES
403-3	1998	ALTERNATIVE TO PIPE SUPPORT
404-1	2006	WATER AND SANITARY SEWER SEPARATION/PROTECTION
404-2	2006	WATER AND SANITARY SEWER SEPARATION/PROTECTION
404-3	2006	WATER AND SANITARY SEWER SEPARATION/PROTECTION
405	1998	BROKEN SEWER LINE REPLACEMENT
420-1	2004	PRE-CAST CONCRETE SEWER MANHOLE
420-2	2001	PRE-CAST CONCRETE SEWER MANHOLE
421	2012	OFFSET MANHOLE 8” TO 30” PIPE
422	2012	BRICK SEWER MANHOLE AND COVER FRAME ADJUSTMENT
423-1	2012	24” CAST IRON MANHOLE FRAME AND COVER
423-2	2012	30” CAST IRON MANHOLE FRAME AND COVER
424-1	2012	24” CAST IRON WATERTIGHT MANHOLE FRAME AND COVER
424-2	2012	30” CAST IRON WATERTIGHT MANHOLE FRAME AND COVER
425	1998	24” ALUMINUM MANHOLE FRAME AND COVER
426	2007	DROP SEWER CONNECTIONS
427	1998	STUB OUT AND PLUGS
428	1998	MANHOLE STEPS
429	1998	INDUSTRIAL WASTE CONTROL VAULT WITH MANHOLE
440-1	2007	TYPE ‘A’ SEWER BUILDING CONNECTION - ELECTRONIC BALL MARKERS (STANDARD)
440-2	2007	TYPE ‘B’ SEWER BUILDING CONNECTION - TWO-WAY CLEANOUT AND METER BOX AT R/W
440-3	2007	TYPE ‘C’ SEWER BUILDING CONNECTION - ONE-WAY CLEANOUT AND METER BOX
440-4	2006	SEWER SERVICE CURB CROSSING STAMP DETAIL
441	2001	SEWER CLEANOUT

500 SERIES: IRRIGATION AND STORM DRAIN INFORMATION

Detail	Revised	Title
501-1	2012	HEADWALL
501-2	2012	HEADWALL
501-3	1998	HEADWALL 42” TO 84” PIPE
501-4	1998	HEADWALL IRRIGATION 18” TO 60” PIPE
501-5	2014*	HEADWALL DROP INLET
502-1	1998	TRASH RACK
502-2	2004	TRASH RACK
503	1998	IRRIGATION STANDPIPE
504	1998	CONCRETE BLOCK JUNCTION BOX
505	1998	CONCRETE PIPE COLLAR
506	1998	IRRIGATION VALVE INSTALLATION
507	1998	ENCASED CONCRETE PIPE (FOR SHALLOW INSTALLATION)
510	1998	CORRUGATED METAL PIPE AND INSTALLATION

500 SERIES: IRRIGATION AND STORM DRAIN INFORMATION (CONTINUED)

Detail	Revised	Title
520	1998	STORM DRAIN MANHOLE BASE (48” AND SMALLER)
521	1998	STORM DRAIN MANHOLE BASE (51” OR LARGER)
522	1998	STORM DRAIN MANHOLE SHAFT
523-1	1998	PRESSURE MANHOLE
523-2	1998	PRESSURE MANHOLE
524	1998	STORM DRAIN LATERAL PIPE CONNECTIONS
530	1998	3’-6” CURB OPENING CATCH BASIN - TYPE ‘A’
531	1998	5’-6” CURB OPENING CATCH BASIN - TYPE ‘B’
532	1998	8’-0” CURB OPENING CATCH BASIN - TYPE ‘C’
533-1	1998	CATCH BASIN TYPE ‘D’
533-2	1999	APRON FOR TYPE ‘D’ CATCH BASIN
533-3	2007	FRAME AND GRATE FOR TYPE ‘D’ CATCH BASIN
533-4	2007	7’-0” CURB OPENING CATCH BASIN TYPE ‘D’ - GRATE DETAILS
534-1	1998	CATCH BASIN TYPE ‘E’
534-2	1998	CATCH BASIN TYPE ‘E’ (DETAILS)
534-3	1998	CATCH BASIN TYPE ‘E’ (DETAILS)
534-4	1998	CATCH BASIN TYPE ‘E’ (DETAILS)
534-5	1998	ALTERNATE GRATE STYLES, SUMP LOCATION
535	2009	CATCH BASIN TYPE ‘F’ (FOR USE WITHOUT CURB)
536-1	1999	COMMON DETAILS AND SECTIONS FOR CURB OPENING CATCH BASINS
536-2	1998	ALTERNATIVE COVER FOR CURB OPENING CATCH BASINS
537	2002	CATCH BASIN TYPE ‘G’
538	1998	CATCH BASIN TYPE ‘H’
539	1998	GRATES FOR CATCH BASINS, TYPE G AND H
540-1	1998	CATCH BASIN GRATES
540-2	1998	CATCH BASIN GRATES
541	2005	CATCH BASIN SUBGRADE DRAIN
545	1998	END SECTION - REINFORCED CONCRETE PIPE
550	1998	SPILLWAY INLET AND OUTLET
552	2009	CONCRETE CUT-OFF WALLS
555	2010	EROSION PROTECTION/GABIONS

* NEWLY REVISED.

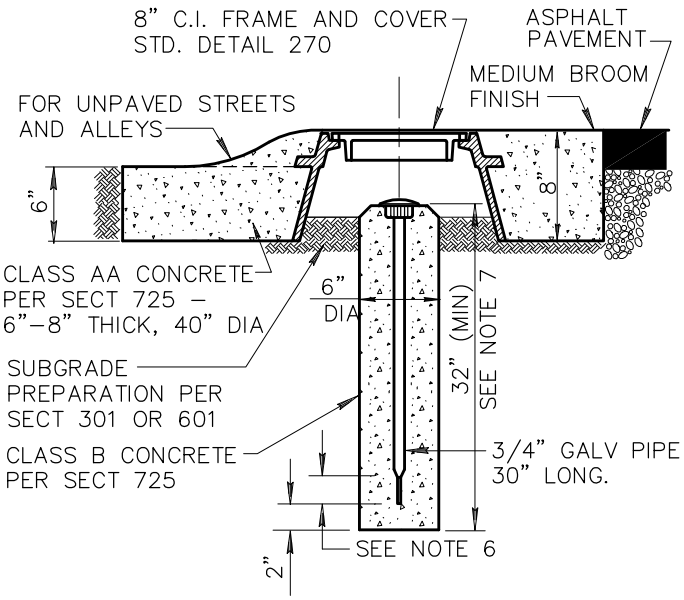

TYPE 'A'

(WITH FRAME)

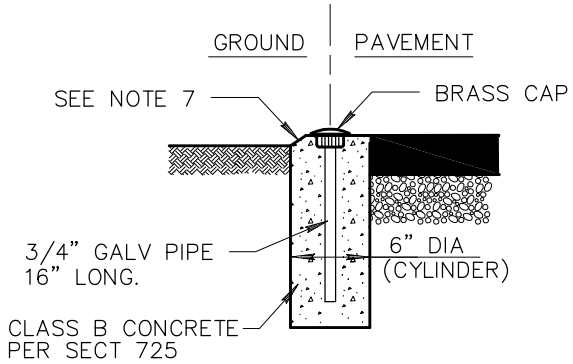

TYPE 'B'

(WITHOUT FRAME)

NOTES:

1. TYPE 'A' TO BE USED AT INTERSECTIONS OF MAJOR STREETS & COLLECTOR STREETS, SECTION CORNERS, SECTION 1/4 CORNERS, CENTER OF SECTIONS, AND AT OTHER POINTS AS SHOWN ON PLANS.
2. TYPE 'B' TO BE USED (EXCEPT WHERE TYPE 'A' IS SPECIFIED) AT INTERSECTION OF STREET CENTERLINES, PC'S, PT'S AND PI'S OF CURVES, SECTION 1/16 CORNERS, SUBDIVISION CORNERS, CHANGE IN ALIGNMENT OF SUBDIVISION BOUNDARIES, AND AT OTHER POINTS AS SHOWN ON PLANS.
3. TYPE 'C' TO BE USED AT CORNERS OF AND CHANGE IN ALIGNMENT OF SUBDIVISION BOUNDARIES WHERE CORNERS OR CHANGES IN ALIGNMENT FALL OUTSIDE OF PAVED AREAS OR UNPAVED ALLEYS AND STREETS.
4. CAP TO BE CONSTRUCTED OF RED BRASS OR BRONZE.
5. LETTERS TO BE APPROX. 1/32" WIDE & 1/32" DEEP.
6. FLATTENING THE BOTTOM 2" OF THE GALVANIZED PIPE IS OPTIONAL.
7. TOP OF CONCRETE POST IS CHAMFERED 3/4" EXCEPT WHEN SET FLUSH WITH PAVEMENT.
8. THE CAP SHALL SHOW THE POINT SURVEYED BY A PUNCH MARK OR SCRIBED CROSS AND THE CAP SHALL BE STAMPED WITH THE YEAR AND THE REGISTERED LAND SURVEYOR'S (RLS) REGISTRATION NUMBER.
9. WHEN APPLICABLE, THE CAP SHALL BE STAMPED WITH THE APPROPRIATE PUBLIC LAND MARKING PER CURRENT MANUAL OF INSTRUCTIONS FOR THE SURVEY OF PUBLIC LANDS OF THE UNITED STATES, PREPARED BY THE BUREAU OF LAND MANAGEMENT.
10. SUBMIT TO THE ENGINEER A COPY OF THE RECORDED CORNER RECORD OR RESULTS OF SURVEY TO DOCUMENT COMPLIANCE WITH THE ARIZONA BOARD OF TECHNICAL REGISTRATION REQUIREMENTS.

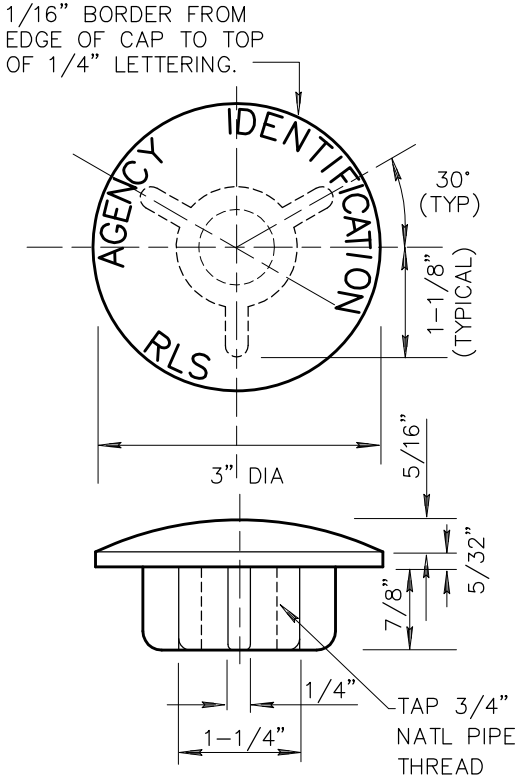

CAP DETAIL

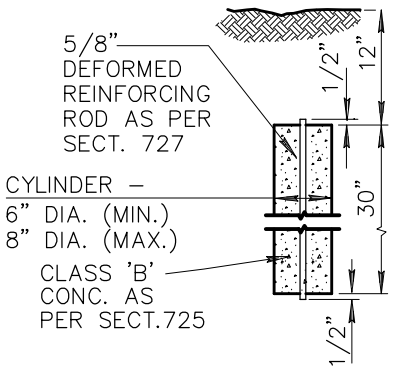

TYPE 'C'

DETAIL NO.		STANDARD DETAIL		REVISED	DETAIL NO.
120	MARICOPA ASSOCIATION of GOVERNMENTS	ENGLISH	SURVEY MARKER	01-01-2014	120

This Page Is Reserved for Future Use.

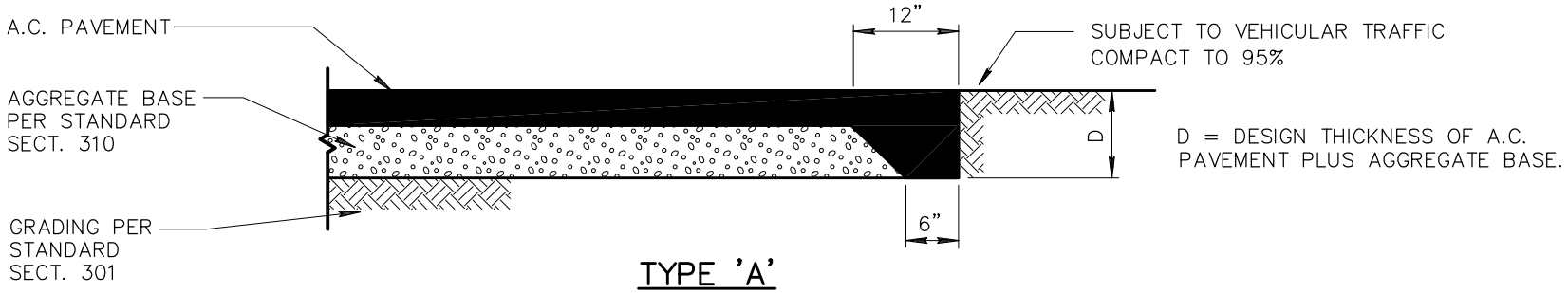

TYPE 'A'

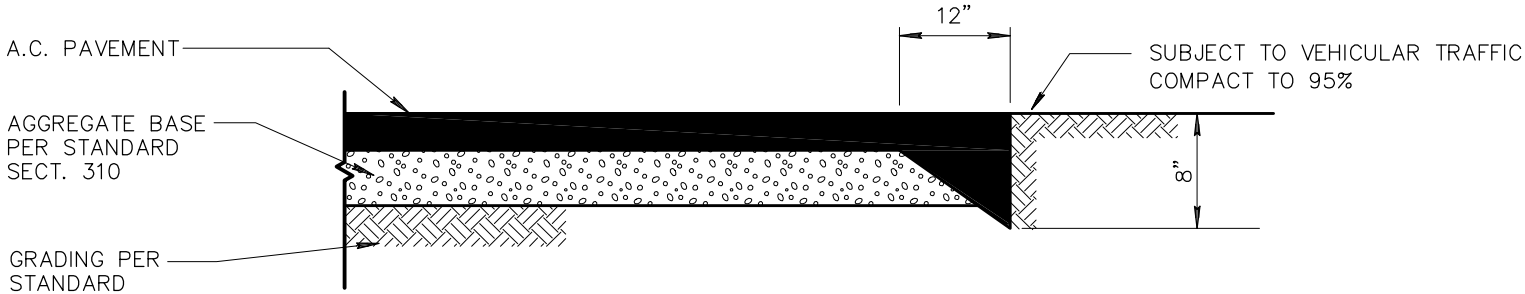

TYPE 'B'

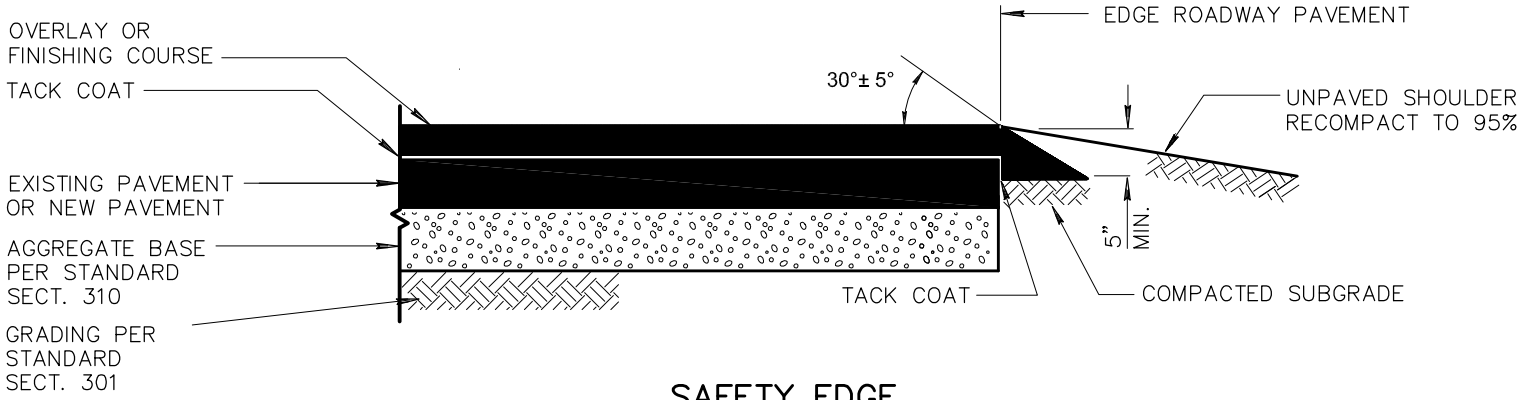

SAFETY EDGE

DETAIL NO.		STANDARD DETAIL		DATE	DETAIL NO.
201	MARICOPA ASSOCIATION of GOVERNMENTS	ENGLISH	ASPHALT PAVEMENT EDGE DETAILS	01-01-2014	201

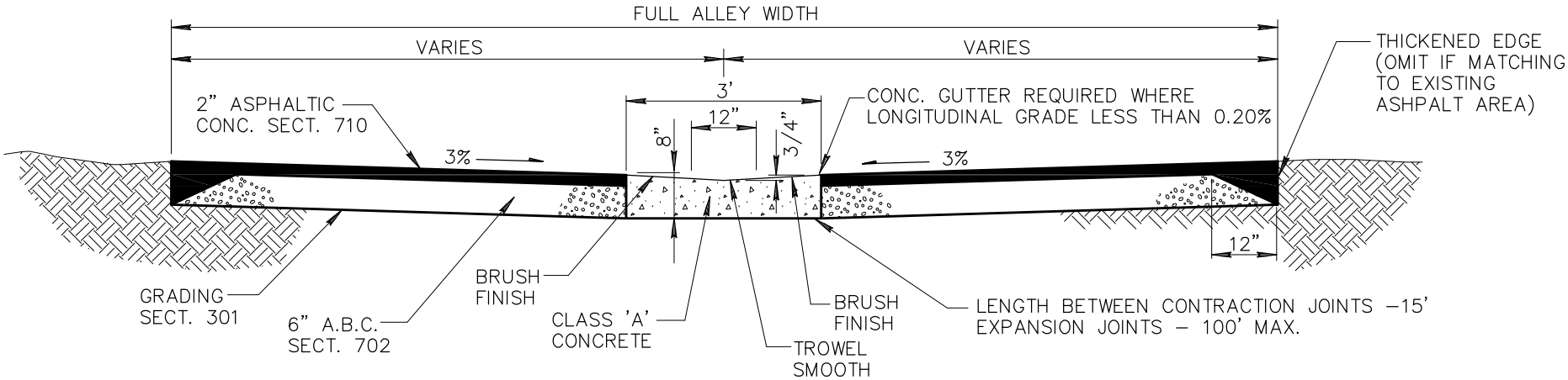

PAVED ALLEY DETAIL

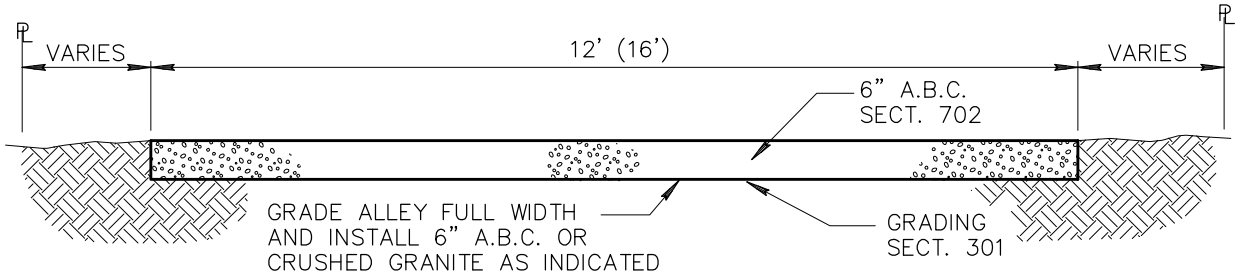

UNPAVED ALLEY DETAIL

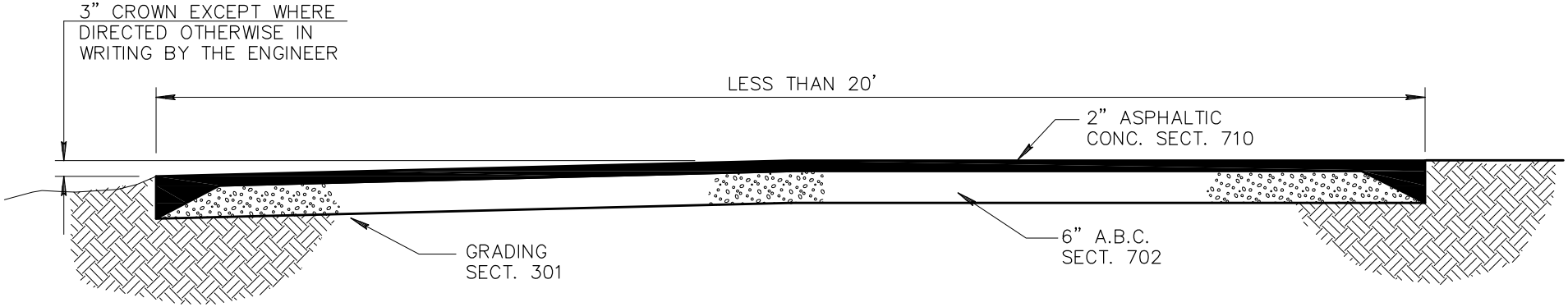

RESIDENTIAL ALLEY DETAIL

DETAIL NO.				REVISED	DETAIL NO.
202	MARICOPA ASSOCIATION of GOVERNMENTS	STANDARD DETAIL ENGLISH	ALLEY DETAILS (PAVED AND UNPAVED)	01–01–1998	202

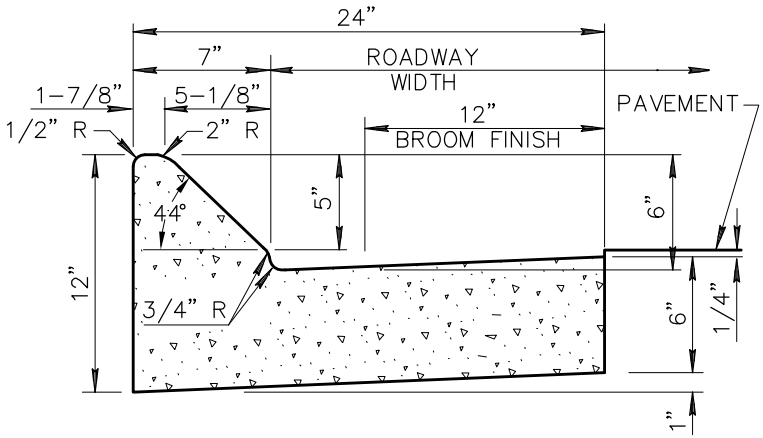

MOUNTABLE CURB AND GUTTER (TYPE E)

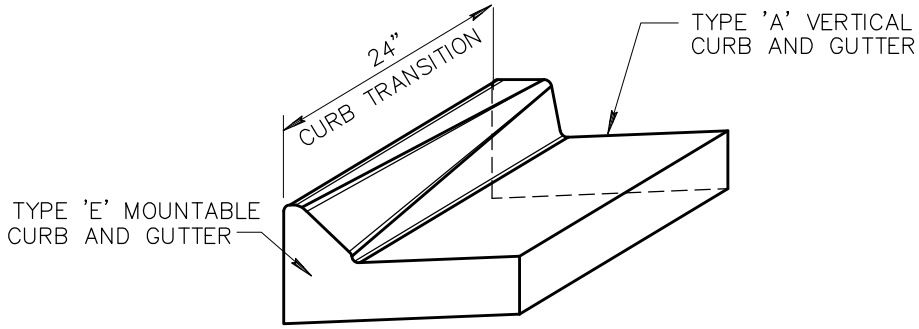

CURB TRANSITION TYPE 'E' TO TYPE 'A'

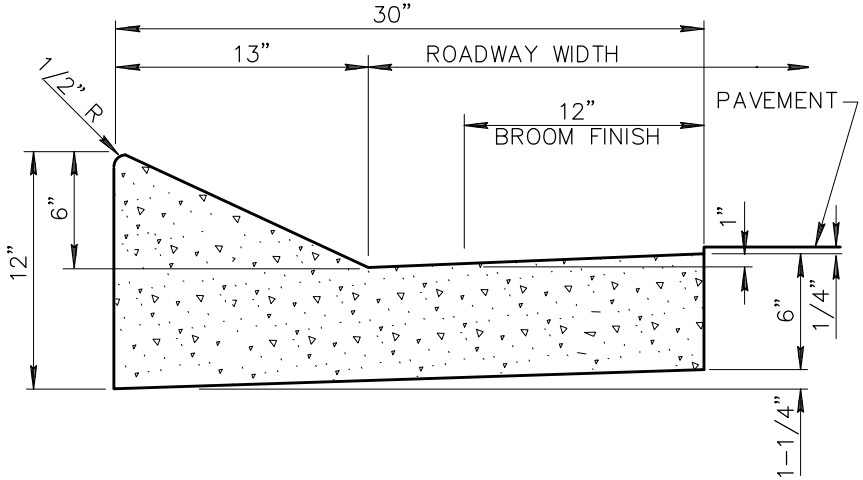

MOUNTABLE CURB AND GUTTER (TYPE F)

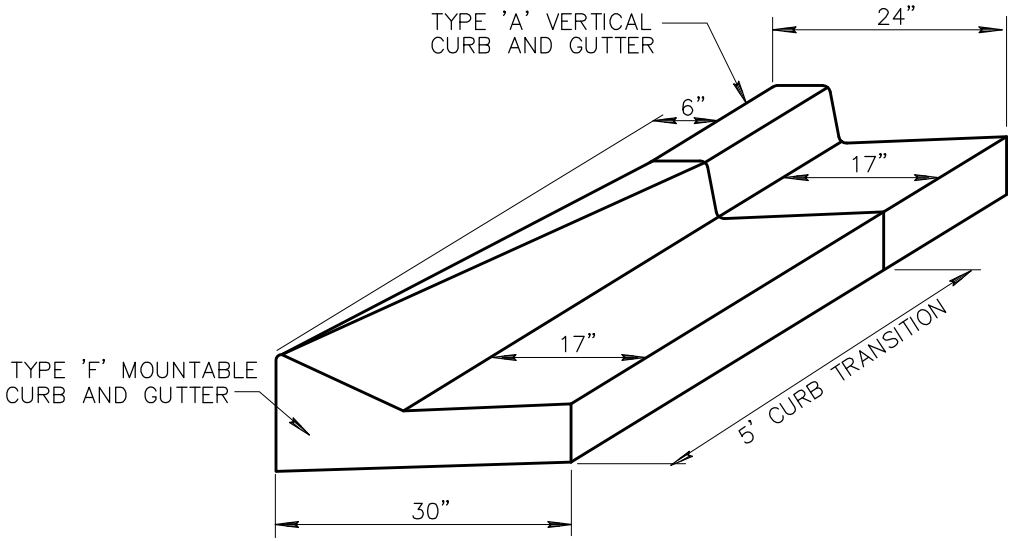

CURB TRANSITION TYPE 'F' TO TYPE 'A'

NOTES: (E & F)

1. ALL EXPOSED SURFACES TO BE TROWEL FINISHED EXCEPT AS SHOWN. SEE SECT. 340.
2. CONTRACTION JOINT SPACING 10' MAXIMUM.
3. EXPANSION JOINTS PER SECT. 340.
4. CLASS 'B' CONCRETE PER SECT. 725.
5. WHEN THE ADJACENT PAVEMENT SECTION SLOPES AWAY FROM THE GUTTER, THE SLOPE OF THE GUTTER PAN SHALL MATCH THE PAVEMENT CROSS SLOPE.

DETAIL NO.				REVISED	DETAIL NO.
220-2	MARICOPA ASSOCIATION of GOVERNMENTS	STANDARD DETAIL ENGLISH	CURB AND GUTTER TYPES E AND F	01-01-2007	220-2

CURB TRANSITION TYPE 'A' TO TYPE 'C'

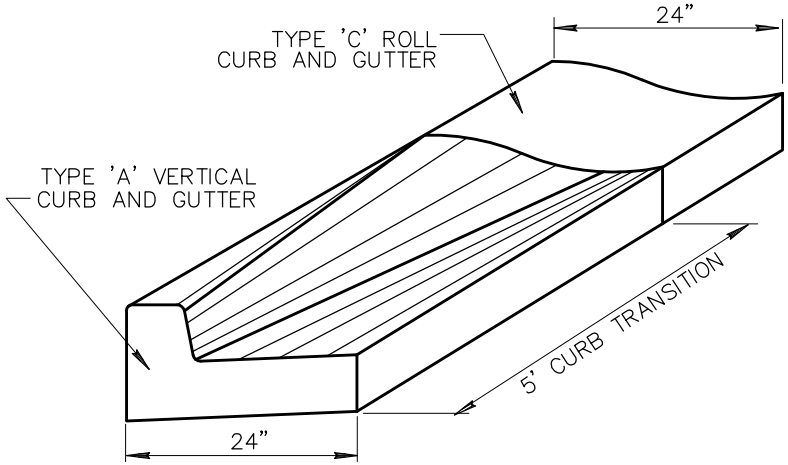

CURB AND GUTTER TRANSITION

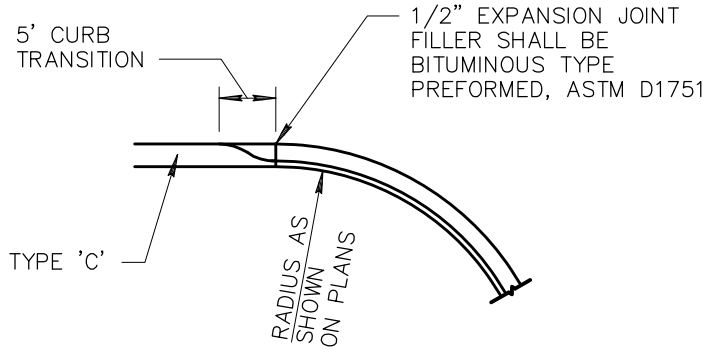

INTEGRAL ROLL CURB, GUTTER AND SIDEWALK

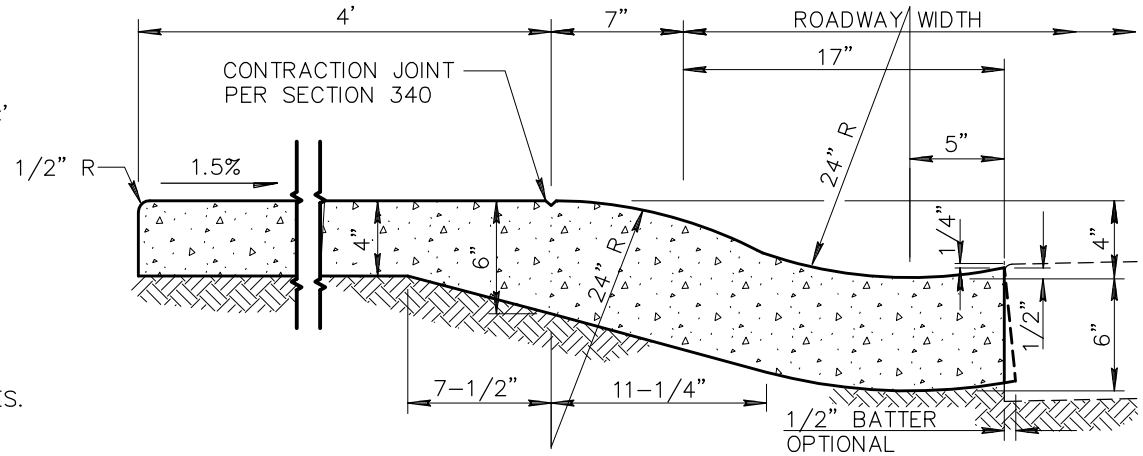

NOTES: (CURB AND GUTTER TRANSITIONS)

1. TRANSITIONS WILL BE PAID FOR AS THE PREDOMINANT TYPE OF CURB AND GUTTER BEING TRANSITIONED. WHEN TYPE 'A' CURB AND GUTTER ARE USED AT CURB RETURNS AND TYPE 'C' CURB AND GUTTER IS PREDOMINANTLY USED ELSEWHERE, THE TYPE 'A' TO TYPE 'C' TRANSITIONS SHALL BE MEASURED AND PAID FOR AS TYPE 'C' CURB AND GUTTER.
2. WHERE PROPOSED CONSTRUCTION IS TO BE CONNECTED TO EXISTING CURB AND GUTTER, THE TRANSITION SHALL BE INDICATED ON PLANS.
3. CLASS 'B' CONCRETE PER SECTION 725.
4. TRANSITION BETWEEN TYPICAL SECTIONS SHALL BE ACCOMPLISHED BY THE USE OF DIRECT STRAIGHT LINE TRANSITIONS OF THE FLOW LINE AND OTHER SURFACE FEATURES.

NOTES: (INTEGRAL ROLL CURB, GUTTER AND SIDEWALK)

1. CONCRETE TO BE MONOLITHIC POUR. EXPOSED SURFACE FINISH AS PER SIDEWALK AND GUTTER DETAIL.
2. CONTRACTION JOINT SPACING 5' MAXIMUM.
3. EXPANSION JOINTS PER SECTION 340.
4. CLASS 'B' CONCRETE PER SECTION 725.

DETAIL NO.		STANDARD DETAIL		REVISED	DETAIL NO.
221	MARICOPA ASSOCIATION of GOVERNMENTS	ENGLISH	**CURB AND GUTTER TRANSITION TYPE A TO TYPE C INTEGRAL ROLL CURB, GUTTER AND SIDEWALK**	01-01-2014	221

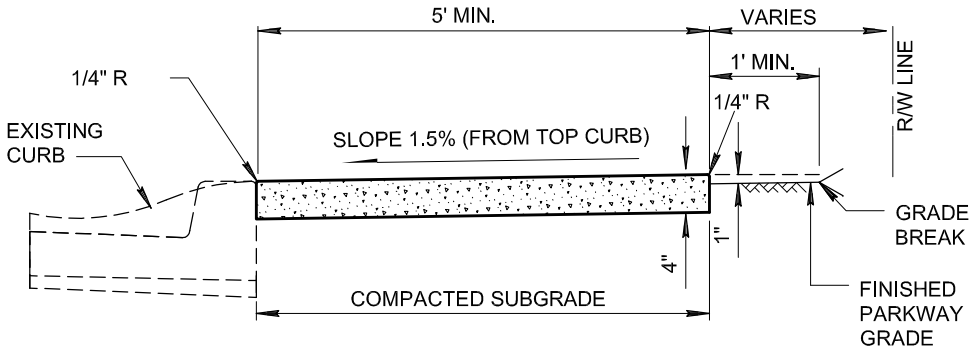

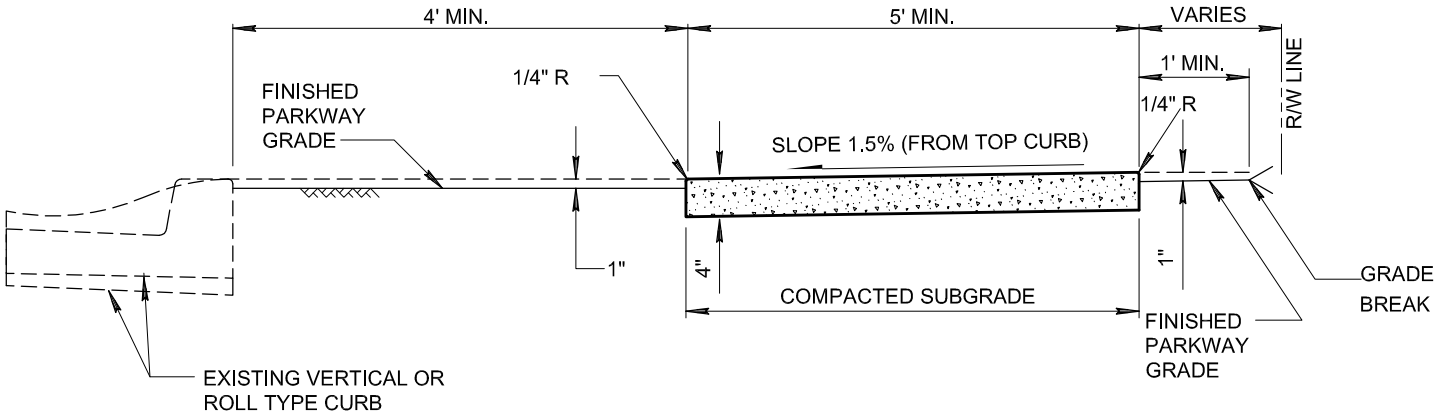

NOTES:

1. SIDEWALK CONSTRUCTION SHALL CONFORM TO SECTION 340.
2. EXPANSION JOINTS SHALL BE 1/2" BITUMINOUS TYPE PREFORMED EXPANSION JOINT FILLER, PER SECTION 729.
3. LARGE AGGREGATE, IN CONTRACTION JOINT SHALL BE SEPARATED TO A DEPTH OF 1", FINISH DEPTH SHALL BE A MINIMUM OF 3/4".
4. EXPANSION JOINTS SHALL CONFORM TO SECTION 340, BE INSTALLED PRIOR TO CONCRETE PLACEMENT, AND AT A MAXIMUM SPACING OF 50'.
5. CONCRETE SHALL BE CLASS 'B' PER SECTION 725.
6. WHEN SIDEWALK AND ADJACENT CURB ARE CONSTRUCTED MONOLITHICALLY, ALL EXPANSION AND CONTRACTION JOINTS SHALL EXTEND ACROSS THE CURB.

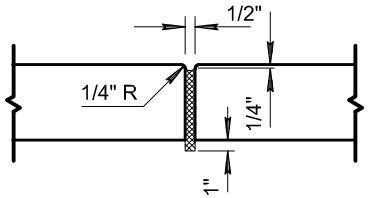

EXPANSION JOINT

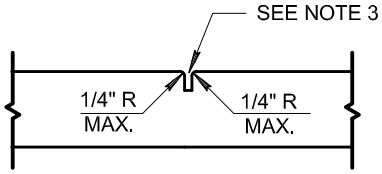

CONTRACTION JOINT

DETAIL NO.		STANDARD DETAIL		REVISED	DETAIL NO.
230	MARICOPA ASSOCIATION of GOVERNMENTS	ENGLISH	SIDEWALKS	01-01-2014	230

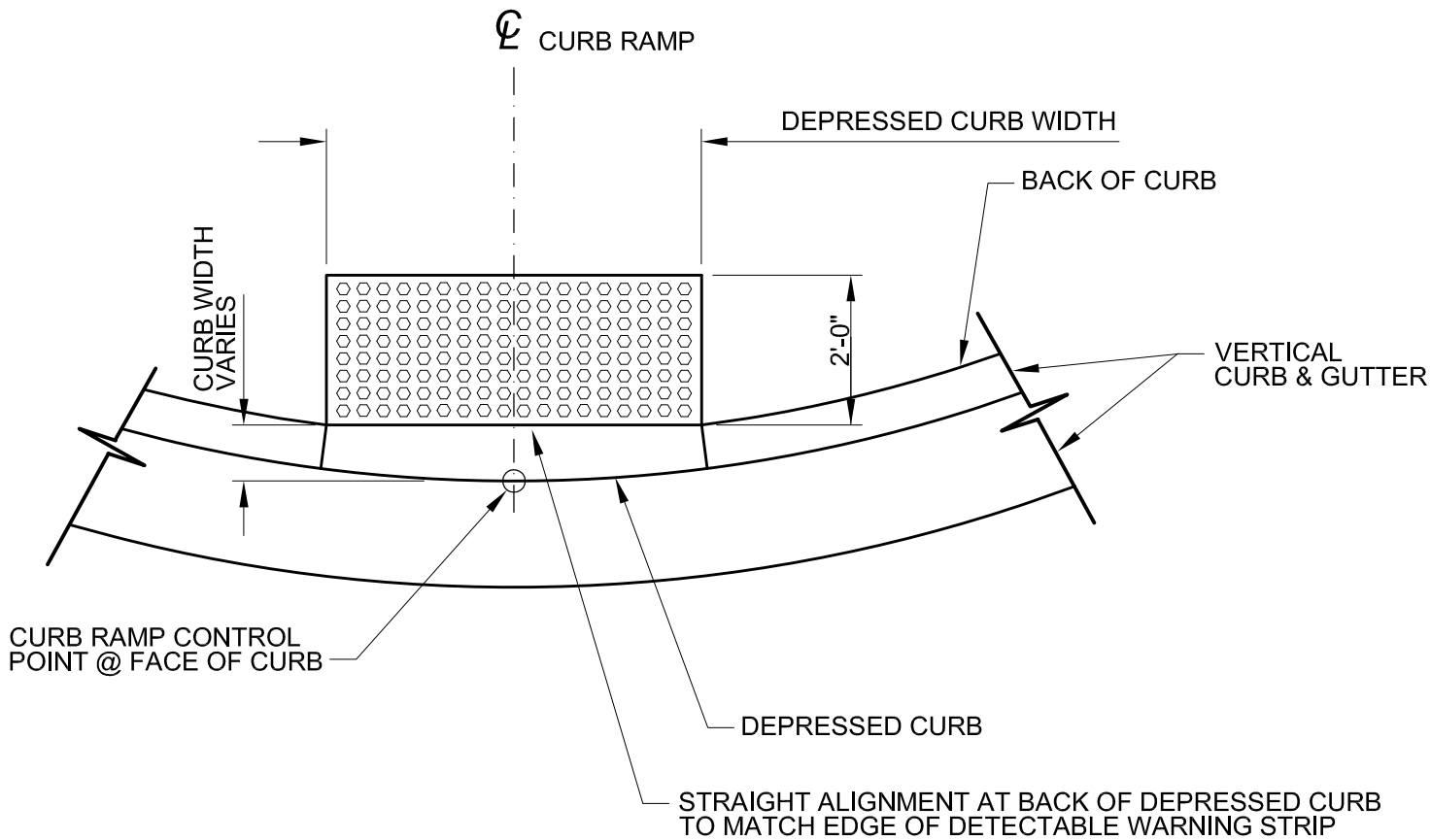

PLAN VIEW

DETAIL NO.				REVISED	DETAIL NO.
234	MARICOPA ASSOCIATION of GOVERNMENTS	STANDARD DETAIL ENGLISH	CURB MODIFICATION AT DETECTABLE WARNING	01-01-2012	234

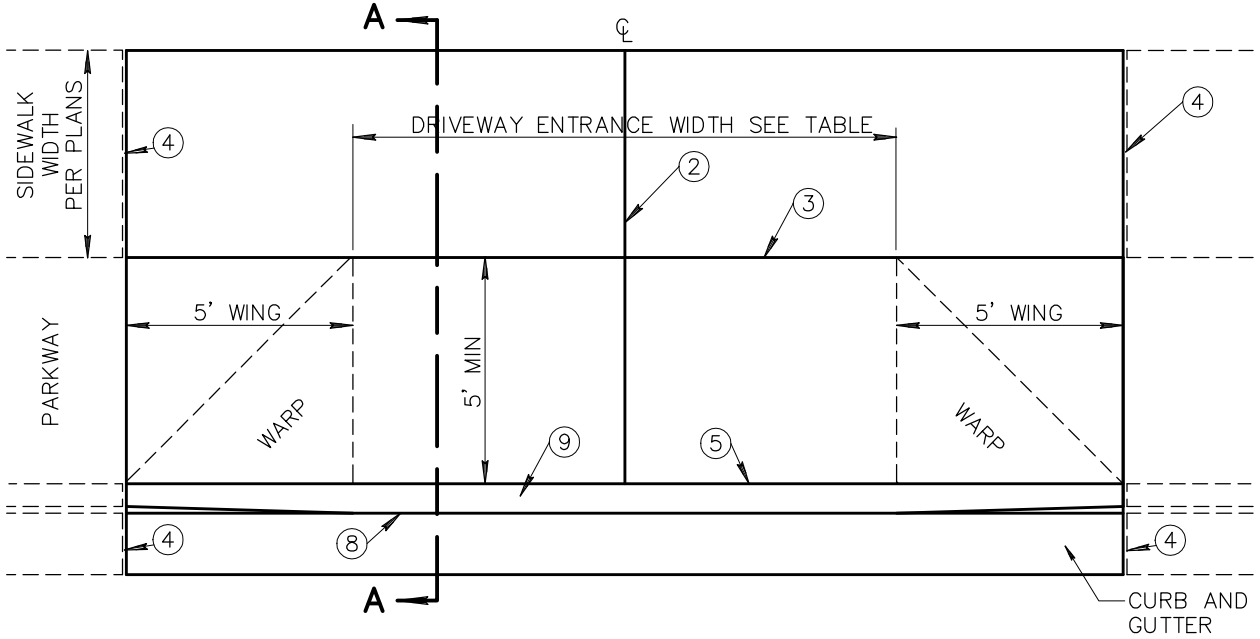

DRIVEWAY WITH DETACHED SIDEWALK

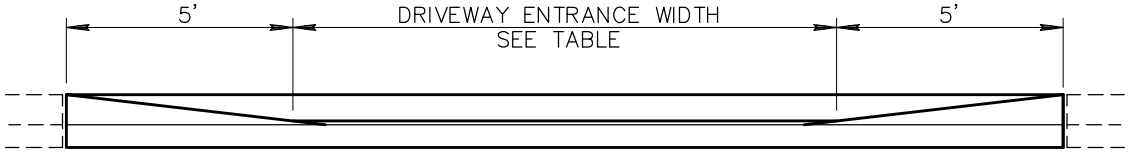

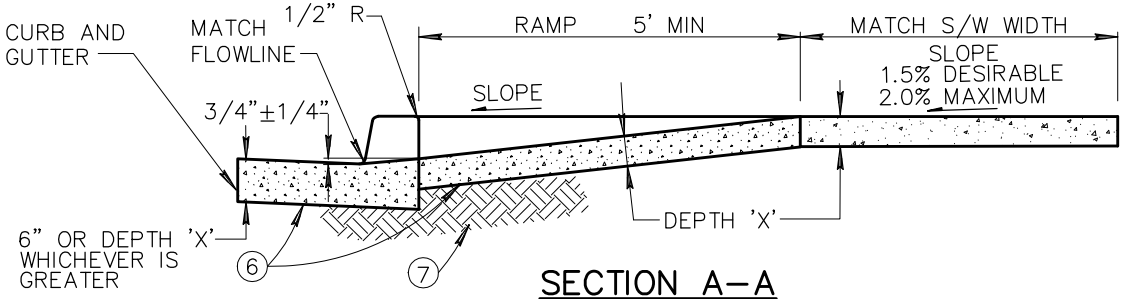

SECTION A–A

NOTES:

1. DEPRESSED CURB SHALL BE PAID FOR AT THE CONTRACT UNIT PRICE FOR THE TYPE OF CURB USED AT THAT LOCATION.
2. CONTRACTION JOINT ON D/W CENTERLINE.
3. CONTRACTION JOINT.
4. 1/2–INCH EXPANSION JOINTS SHALL COMPLY WITH SECTION 340.
5. BACK OF CURB – CONSTRUCTION JOINT.
6. CONCRETE CLASS AS NOTED IN TABLE. CONCRETE PER SECTION 725.
7. SUBGRADE PREPARATION, SECT. 301.
8. FLOW LINE OF GUTTER.
9. DEPRESSED CURB.
10. SECT. A–A AND ELEVATION: D/W SHOWN WITH VERTICAL CURB AND GUTTER, ROLL TYPE CURB AND GUTTER TREATED SIMILARLY.
11. ROUGH BROOM FINISH FULL WIDTH OF RAMP AND WINGS.
12. TROWEL AND USE LIGHT HAIR BROOM FINISH FOR WALKWAY AREA.
13. 'DRIVEWAY ENTRANCE WIDTH' IS THE DRIVEWAY WIDTH PLUS ADDITIONAL WIDENING REQUIRED BY THE LOCAL JURISDICTION.
14. ELEVATION AT TOP OF DRIVEWAY RAMP SHALL BE EQUAL TO OR HIGHER THAN NORMAL CURB ELEVATION.

COMMERCIAL AND INDUSTRIAL

DRIVEWAY ENTRANCE WIDTH	MIN.	MAX.	CLASS	DEPTH 'X'
COMMERCIAL	✱ 16'	40'	A	9"
INDUSTRIAL	✱ 16'	40'	A	9"
✱24' MIN. FOR TWO WAY TRAFFIC				

RESIDENTIAL

DRIVEWAY ENTRANCE WIDTH	MIN.	MAX.	CLASS	DEPTH 'X'
MAJOR STREET	16'	30'	B	5"
COLLECTOR STREET	✱ 12'	30'	B	5"
LOCAL STREET	12'	30'	B	5"
✱16' DESIRABLE				

DETAIL NO.				REVISED	DETAIL NO.
250–1	MARICOPA ASSOCIATION of GOVERNMENTS	STANDARD DETAIL ENGLISH	DRIVEWAY ENTRANCES WITH DETACHED SIDEWALK	01–01–2014	250–1

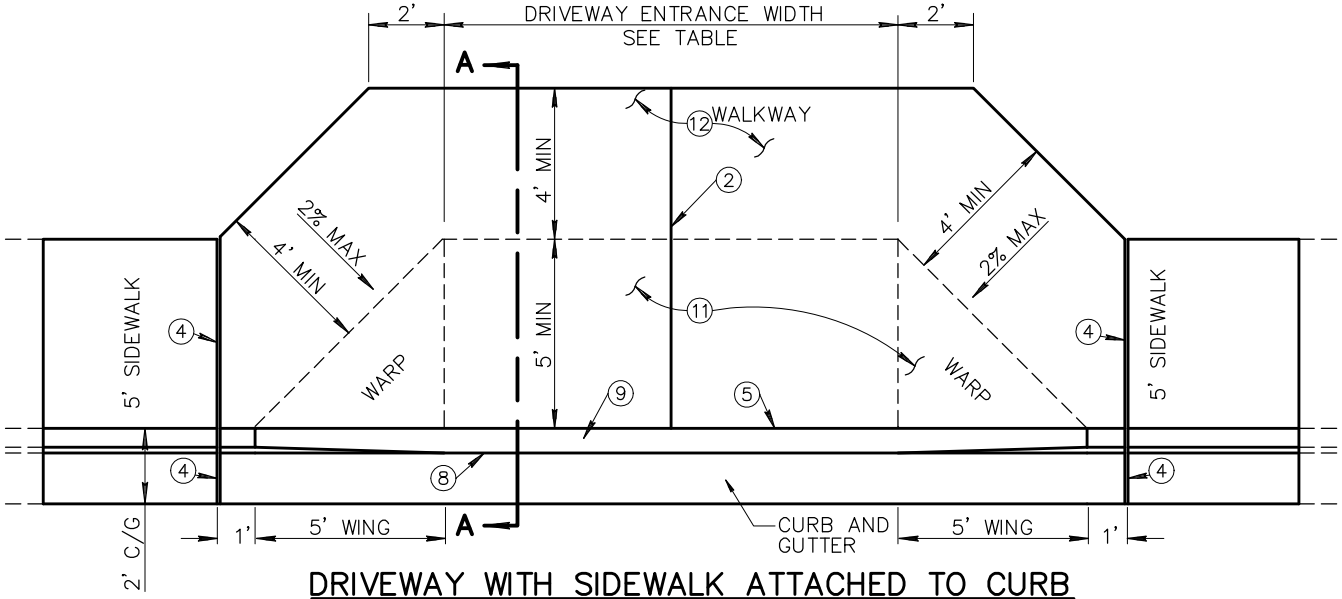

DRIVEWAY WITH SIDEWALK ATTACHED TO CURB

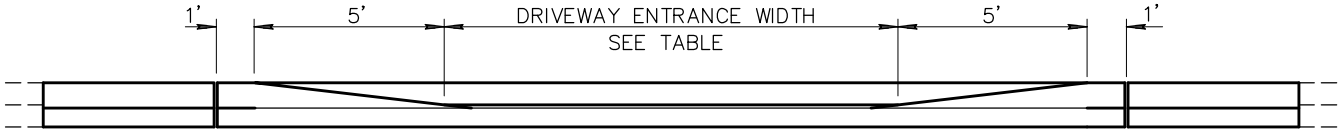

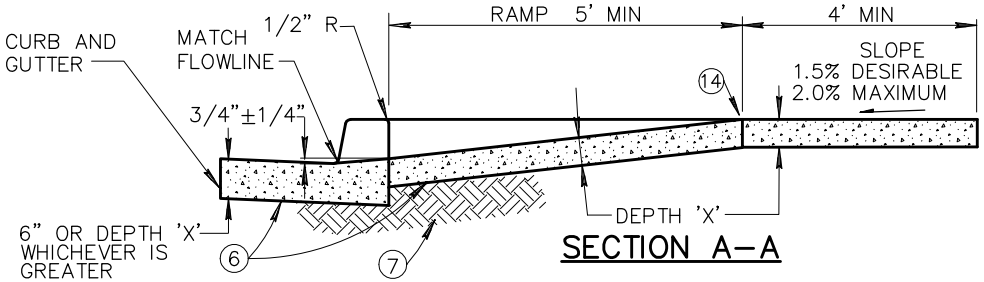

SECTION A–A

NOTES:

1. DEPRESSED CURB SHALL BE PAID FOR AT THE CONTRACT UNIT PRICE FOR THE TYPE OF CURB USED AT THAT LOCATION.
2. CONTRACTION JOINT(S) FOR DRIVEWAY ENTRANCE: WIDTH LESS THAN 22' NONE REQUIRED; WIDTH GREATER THAN 22' AND LESS THAN 30' LOCATE SINGLE JOINT ON D/W CENTERLINE; WIDTH OF 30' OR GREATER LOCATE TWO JOINTS TO EQUALLY DIVIDE THE DRIVEWAY ENTRANCE WIDTH.
3. DETAIL GEOMETRICS ARE BASED ON A CURB HEIGHT OF SIX INCHES (6"), AN ATTACHED SIDEWALK WIDTH OF FIVE FEET (5'), AND A DRIVEWAY RAMP LENGTH NOT EXCEEDING SIX FEET (6'). GEOMETRIC MODIFICATIONS MAY BE REQUIRED WHEN CONDITIONS ARE MODIFIED.
4. 1/2–INCH EXPANSION JOINTS SHALL COMPLY WITH SECTION 340.
5. BACK OF CURB – CONSTRUCTION JOINT.
6. CONCRETE CLASS AS NOTED IN TABLE. CONCRETE PER SECTION 725.
7. SUBGRADE PREPARATION, SECT. 301.
8. FLOW LINE OF GUTTER.
9. DEPRESSED CURB.
10. SECT. A–A AND ELEVATION: D/W SHOWN WITH VERTICAL CURB AND GUTTER, ROLL TYPE CURB AND GUTTER TREATED SIMILARLY.
11. ROUGH BROOM FINISH FULL WIDTH OF RAMP AND WINGS.
12. TROWEL AND USE LIGHT HAIR BROOM FINISH FOR WALKWAY AREA.
13. 'DRIVEWAY ENTRANCE WIDTH' IS THE DRIVEWAY WIDTH PLUS ADDITIONAL WIDENING REQUIRED BY THE LOCAL JURISDICTION.
14. ELEVATION AT TOP OF DRIVEWAY RAMP SHALL BE EQUAL TO OR HIGHER THAN NORMAL CURB ELEVATION.

COMMERCIAL AND INDUSTRIAL				
DRIVEWAY ENTRANCE WIDTH	MIN.	MAX.	CLASS	DEPTH 'X'
COMMERCIAL	✳ 16'	40'	A	9"
INDUSTRIAL	✳ 16'	40'	A	9"
✳24' MIN. FOR TWO WAY TRAFFIC				

RESIDENTIAL				
DRIVEWAY ENTRANCE WIDTH	MIN.	MAX.	CLASS	DEPTH 'X'
MAJOR STREET	16'	30'	B	5"
COLLECTOR STREET	✳ 12'	30'	B	5"
LOCAL STREET	12'	30'	B	5"
✳16' DESIRABLE				

DETAIL NO.				REVISED	DETAIL NO.
250–2	MARICOPA ASSOCIATION of GOVERNMENTS	STANDARD DETAIL ENGLISH	DRIVEWAY ENTRANCES WITH SIDEWALK ATTACHED TO CURB	01–01–2013	250–2

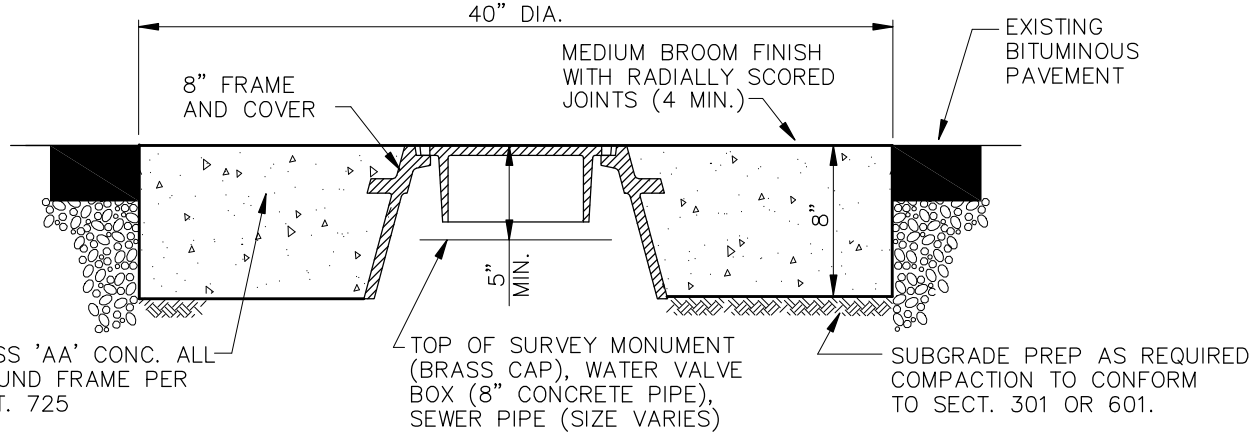

CLEAN OUT FRAME & GRADE ADJUSTMENT WATER VALVE, SURVEY MONUMENT, OR SEWER

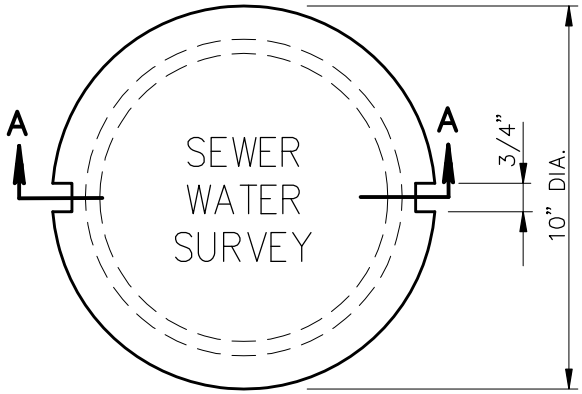

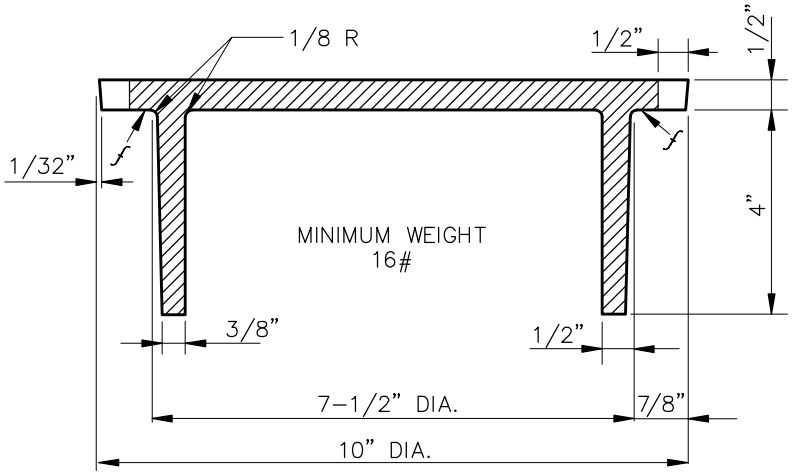

COVER SECTION A-A

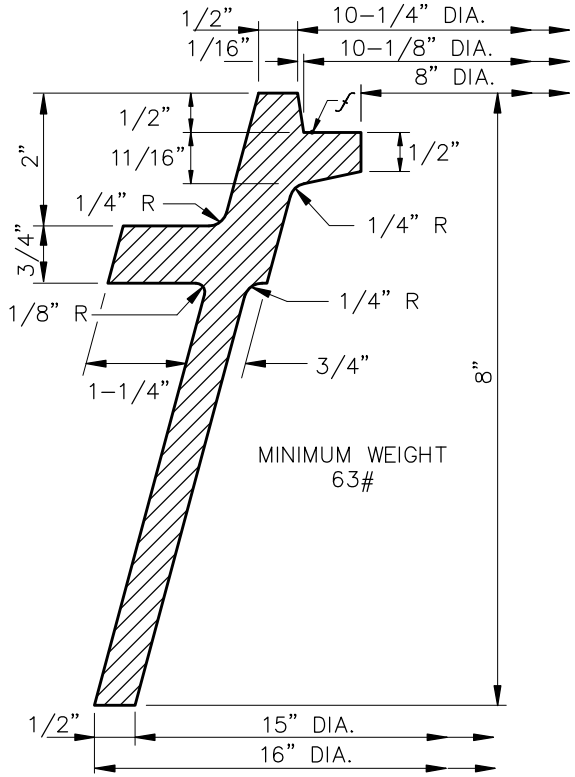

8" C.I. FRAME AND COVER

NOTES:

1. CASTING TO CONFORM TO SECT. 787.
2. LETTERS ON COVER TO BE AS FOLLOWS:
   "SEWER", "WATER", OR "SURVEY" AS DIRECTED TOTAL WIDTH OF WORD "SEWER" OR "WATER" 3-3/4". TOTAL WIDTH OF WORD "SURVEY" 4-1/2". LETTER SIZE 5/8" x 3/4", RAISED 1/16" ABOVE LEVEL OF COVER, TYPE OF LETTERS TO BE SUBMITTED FOR APPROVAL.
3. ƒ INDICATES MACHINE FINISHED SURFACE.

DETAIL NO.				REVISED	DETAIL NO.
270	MARICOPA ASSOCIATION of GOVERNMENTS	STANDARD DETAIL ENGLISH	FRAME AND COVER	01-01-2014	270

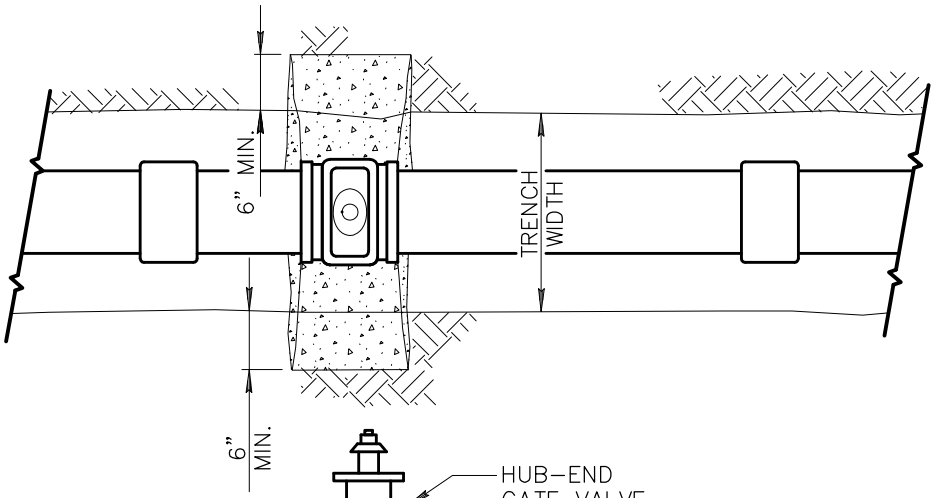

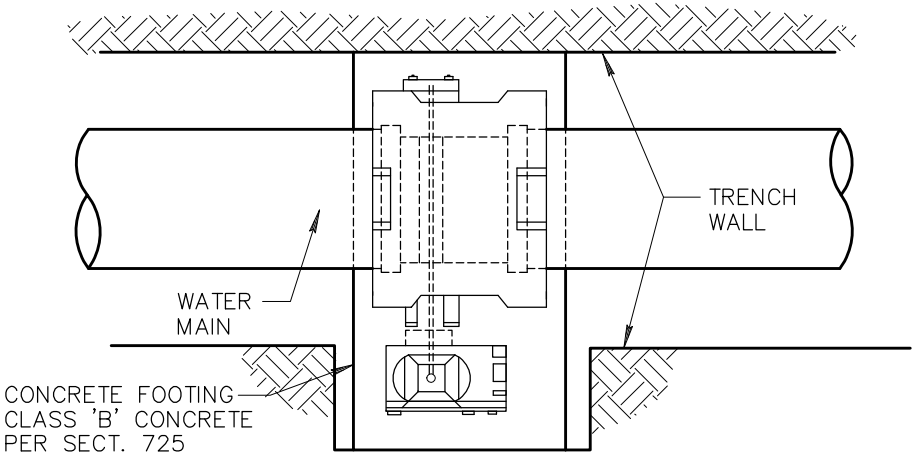

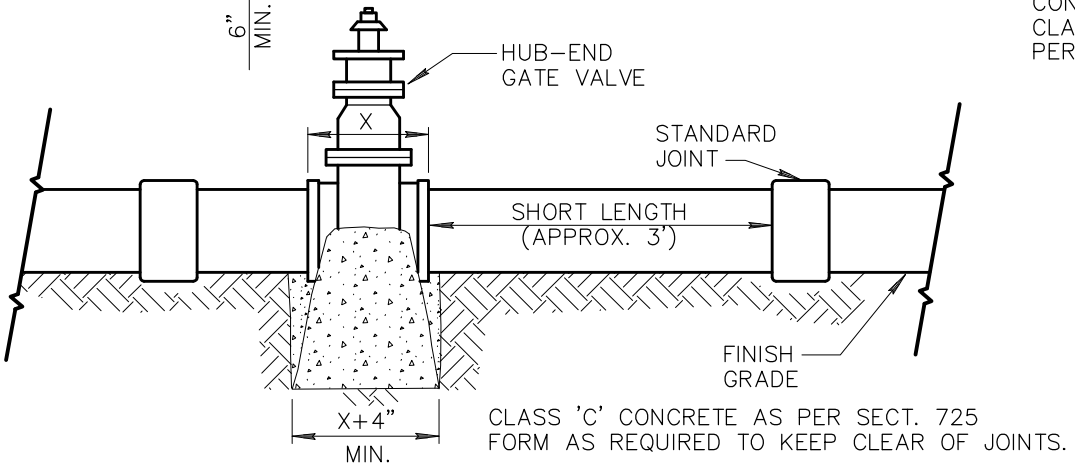

CLASS 'C' CONCRETE AS PER SECT. 725
FORM AS REQUIRED TO KEEP CLEAR OF JOINTS.

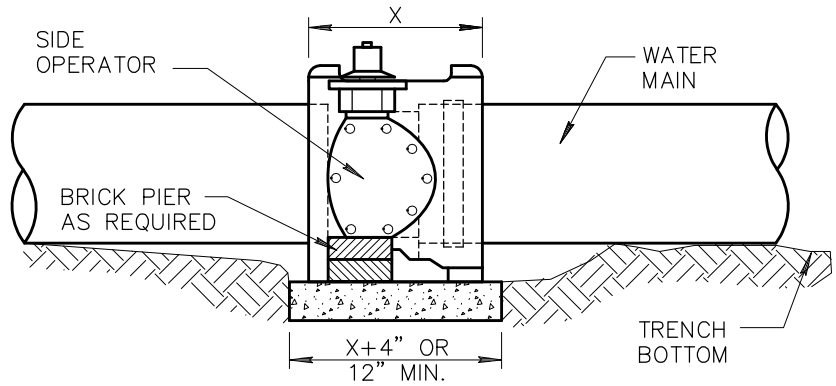

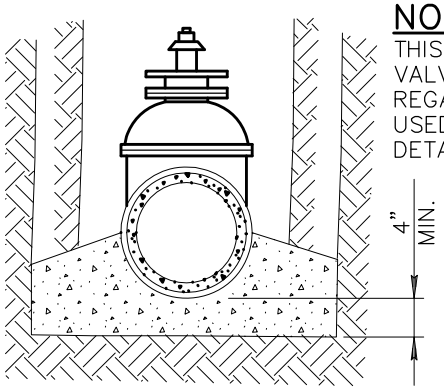

NOTE:

THIS DETAIL COVERS WATER GATE VALVES, 4" TO 12" INCLUSIVE REGARDLESS OF TYPE OF PIPE USED. LARGER LINES TO BE DETAILED ON PLANS.

WATER GATE VALVE

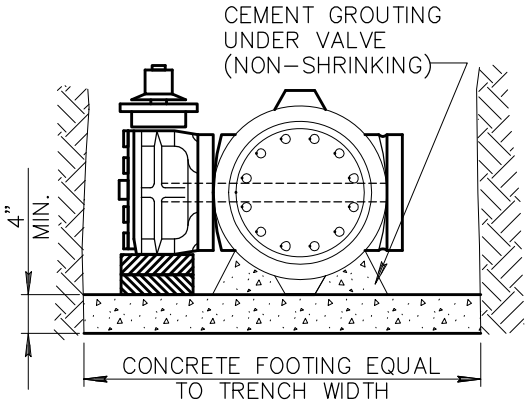

NOTES:

1. THIS DETAIL COVERS BUTTERFLY VALVE INSTALLATION, 3" TO 12" INCLUSIVE, REGARDLESS OF TYPE OF PIPE OR JOINT USED. LARGER LINES TO BE DETAILED ON PLANS.
2. VALVE BOX AND COVER REQUIRED PER DETAILS 270 AND 391.

BUTTERFLY VALVE

DETAIL NO.				REVISED	DETAIL NO.
301	MARICOPA ASSOCIATION of GOVERNMENTS	STANDARD DETAIL ENGLISH	BLOCKING FOR WATER GATE AND BUTTERFLY VALVES	01-01-1998	301

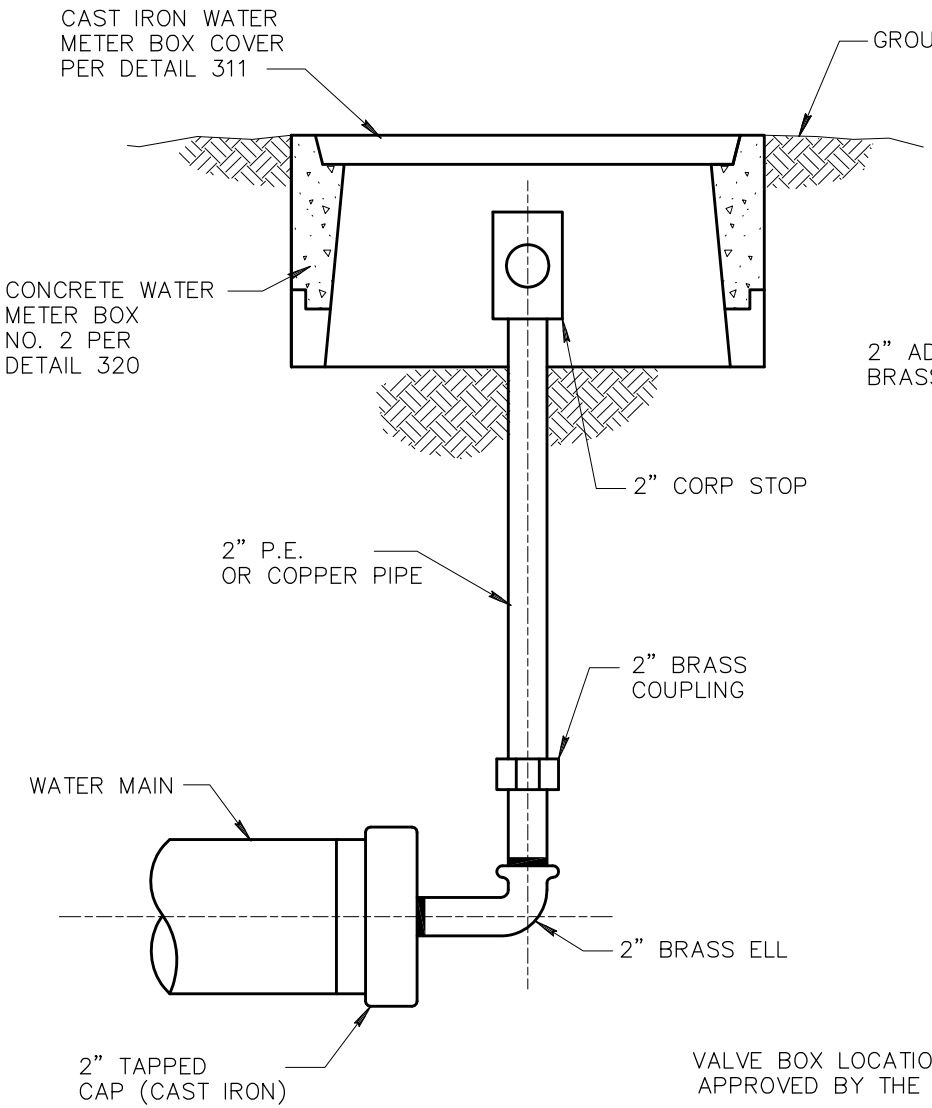

TYPE 'A'

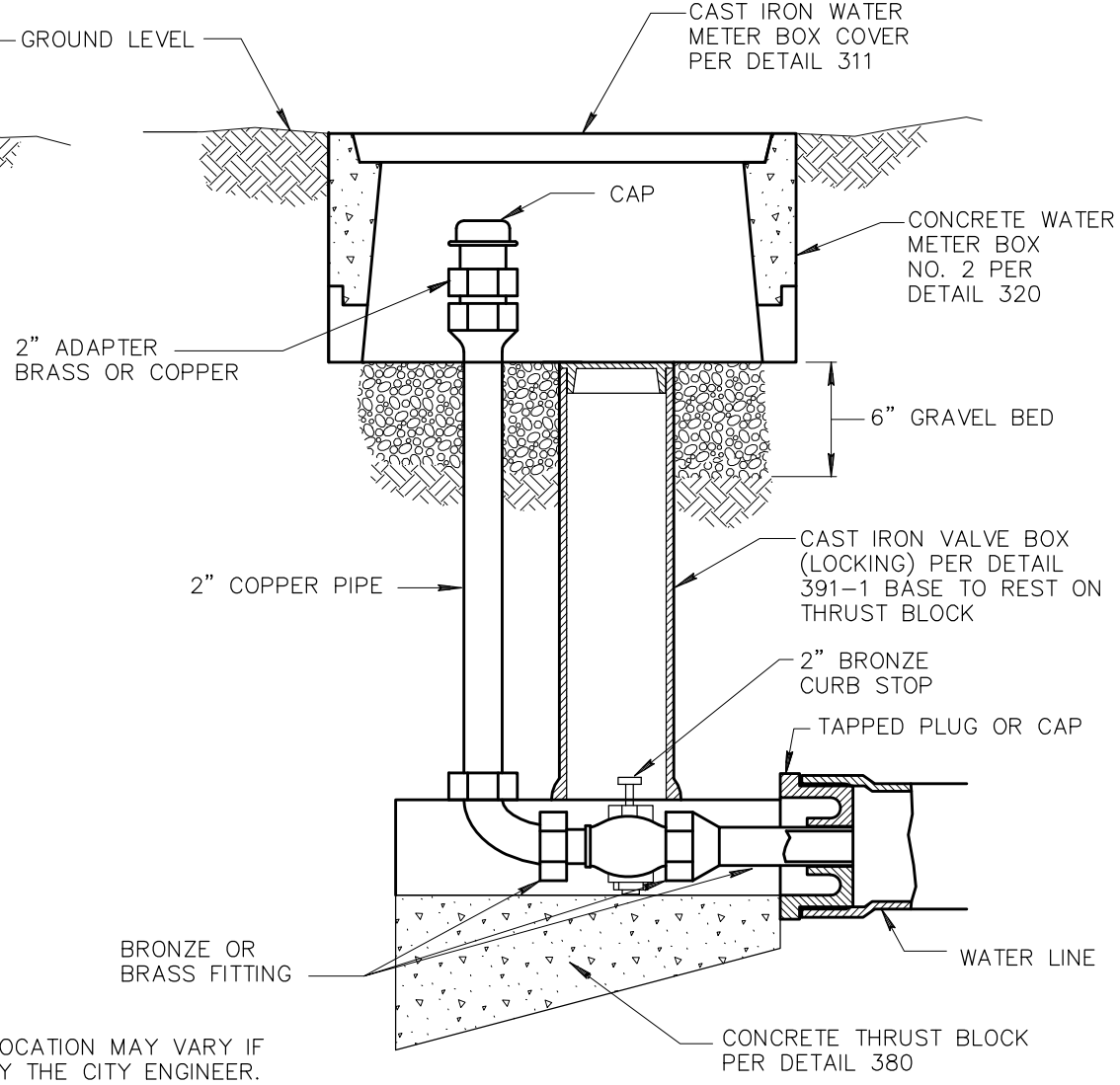

VALVE BOX LOCATION MAY VARY IF APPROVED BY THE CITY ENGINEER.

TYPE 'B'

DETAIL NO.				REVISED	DETAIL NO.
390	MARICOPA ASSOCIATION of GOVERNMENTS	STANDARD DETAIL ENGLISH	CURB STOP WITH FLUSHING PIPE	01-01-1998	390

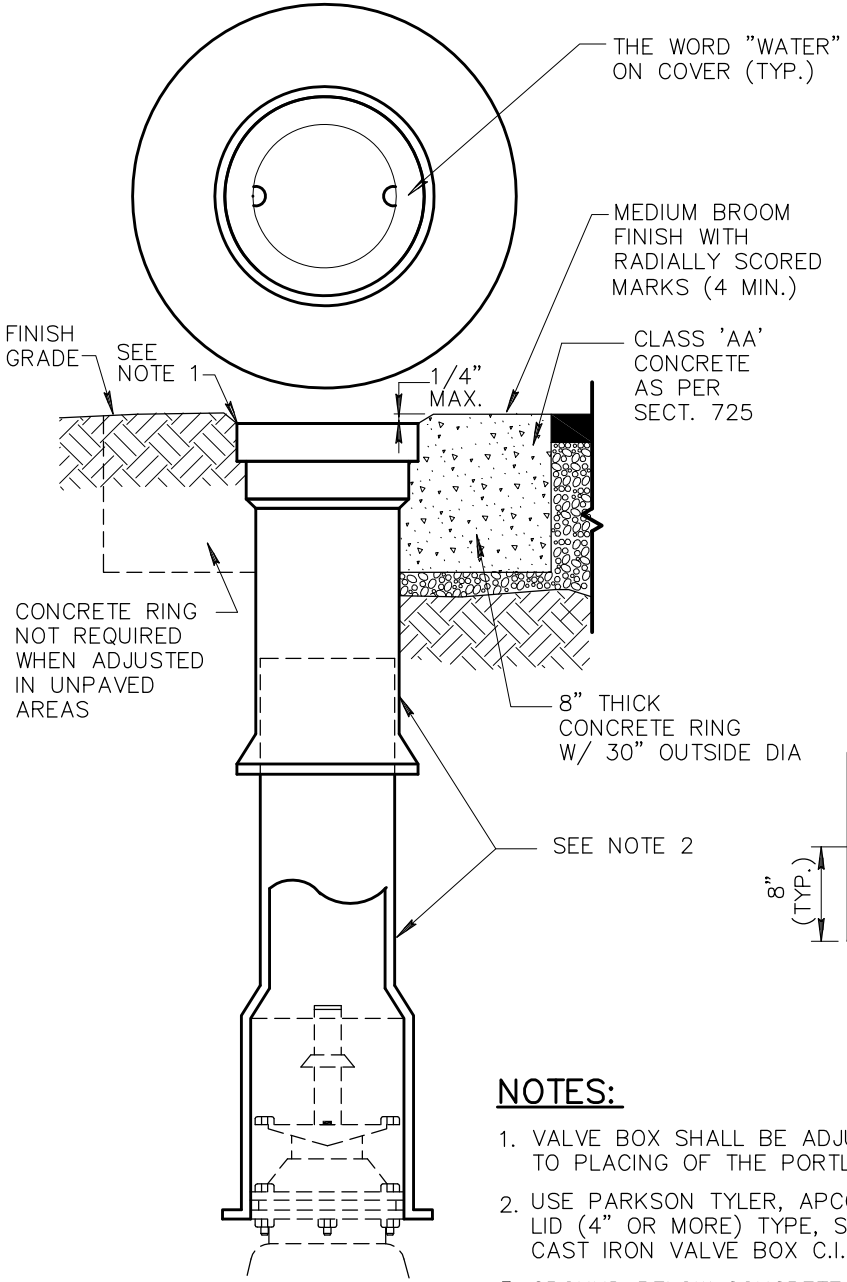

TYPE 'C'

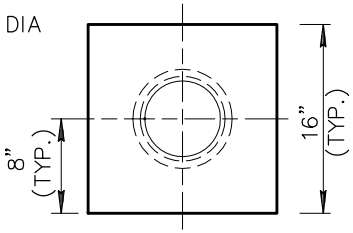

VIEW A–A

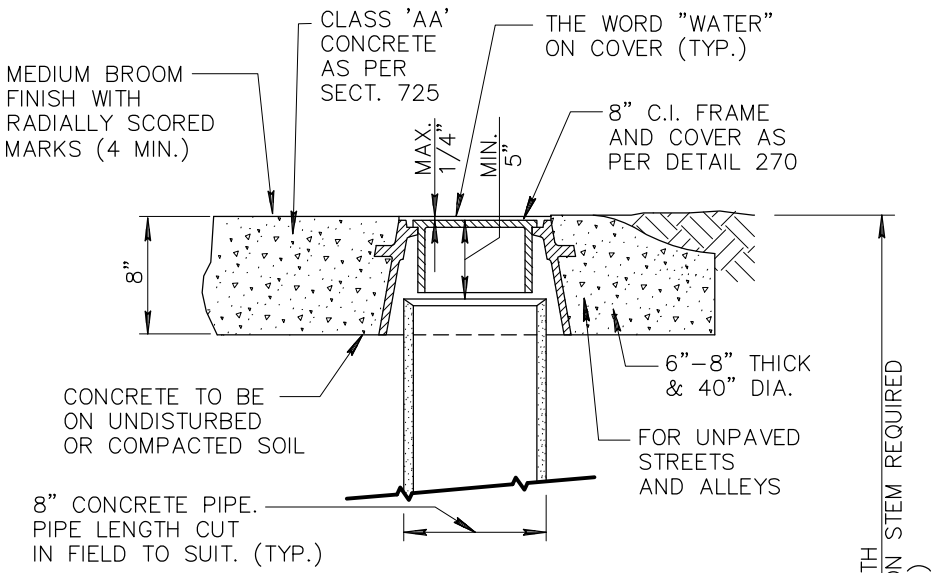

TYPE 'A'

(TO BE USED IN AREAS SUBJECT TO VEHICULAR TRAFFIC.)

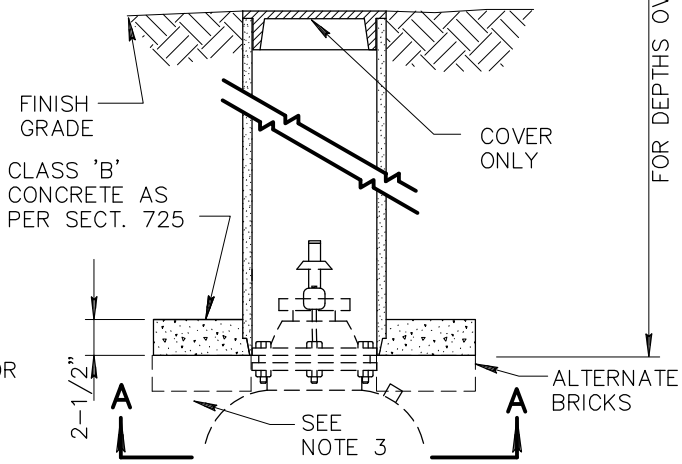

TYPE 'B'

(NOT SUBJECT TO VEHICULAR TRAFFIC)

NOTES:

1. VALVE BOX SHALL BE ADJUSTED TO THE FINISHED GRADE PRIOR TO PLACING OF THE PORTLAND CEMENT CONCRETE SURFACE.
2. USE PARKSON TYLER, APCO OR EQUAL DEEP SKIRTED LID (4" OR MORE) TYPE, SLIDING ADJUSTABLE CAST IRON VALVE BOX C.I. MIN. T.S. 30,000 P.S.I.
3. GROUND BELOW CONCRETE PAD OR 3 BRICKS TO BE COMPACTED 95% OF MAX. DENSITY.

DETAIL NO.				REVISED	DETAIL NO.
391–1	MARICOPA ASSOCIATION of GOVERNMENTS	STANDARD DETAIL ENGLISH	VALVE BOX INSTALLATION AND GRADE ADJUSTMENT	01–01–2014	391–1

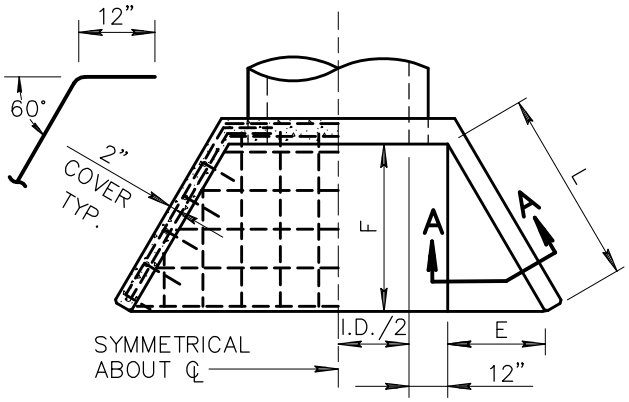

PLAN

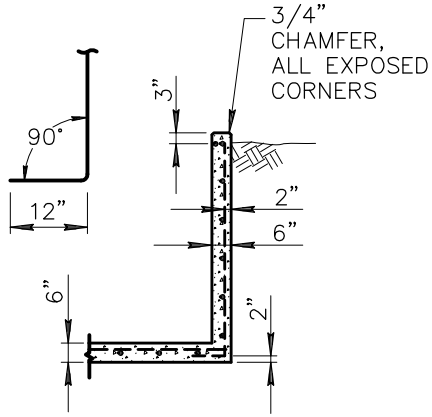

SECTION A–A

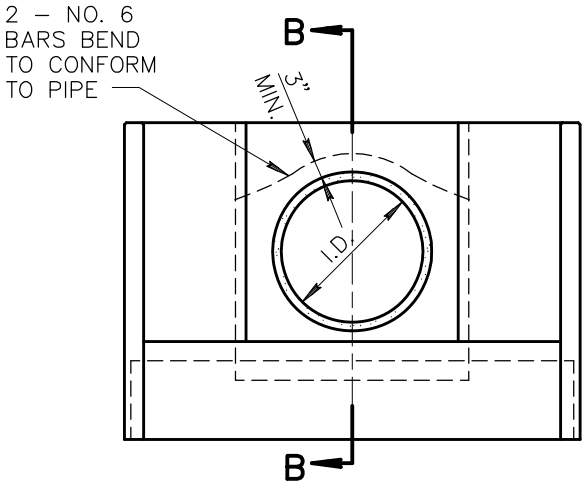

ELEVATION

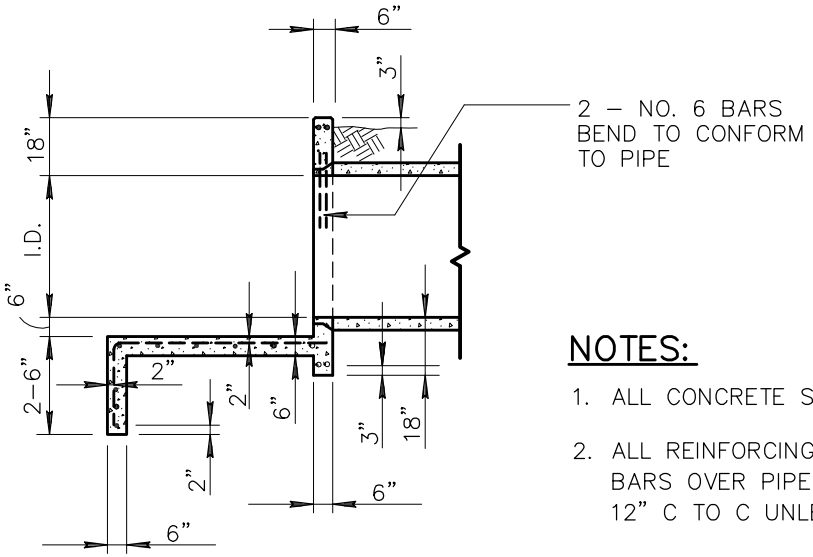

SECTION B–B

PIPE I.D.	DIMENSIONS		
	L	E	F (APPROX)
18"	2'–0"	1'–0"	1'–9"
24"	2'–0"	1'–0"	1'–9"
30"	3'–0"	1'–6"	2'–7"
36"	4'–0"	2'–0"	3'–6"
42"	5'–0"	2'–6"	4'–4"
48"	6'–0"	3'–0"	5'–2"
54"	7'–0"	3'–6"	6'–1"
60"	8'–0"	4'–0"	6'–11"

NOTES:

1. ALL CONCRETE SHALL BE CLASS 'A' PER SECT. 725.
2. ALL REINFORCING BARS SHALL BE NO. 4 EXCEPT NO. 6 BARS OVER PIPE. BAR SPACING APPROXIMATELY 12" C TO C UNLESS OTHERWISE NOTED.
3. 30° WING WALL FLARE SHOWN; 45° NORMALLY DESIRABLE.

DETAIL NO.				REVISED	DETAIL NO.
501–4	MARICOPA ASSOCIATION of GOVERNMENTS	STANDARD DETAIL ENGLISH	HEADWALL IRRIGATION 18" TO 60" PIPE	01–01–1998	501–4

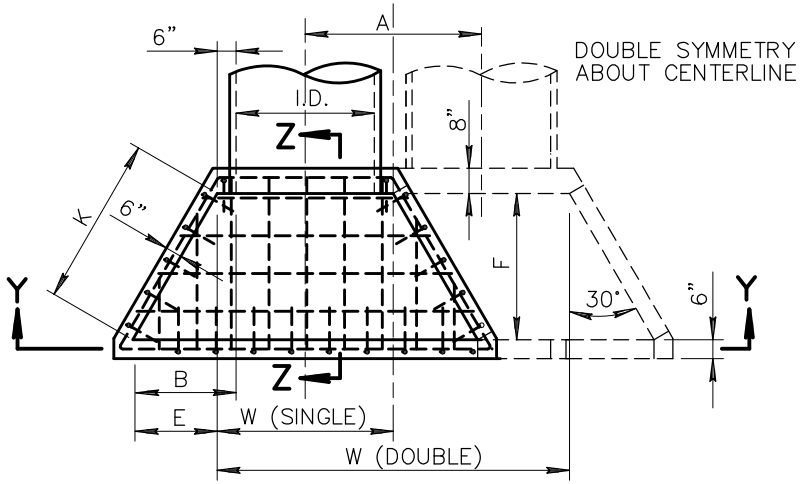

PLAN

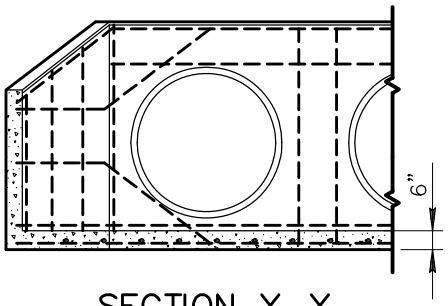

SECTION Y–Y

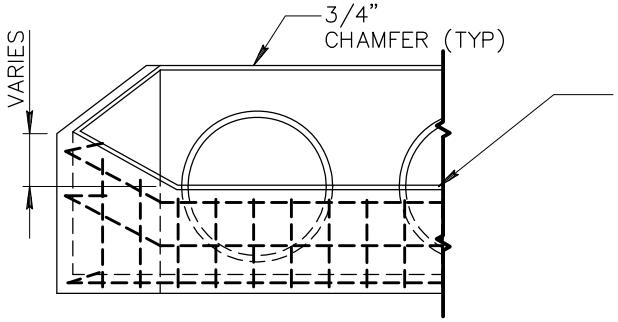

ELEVATION

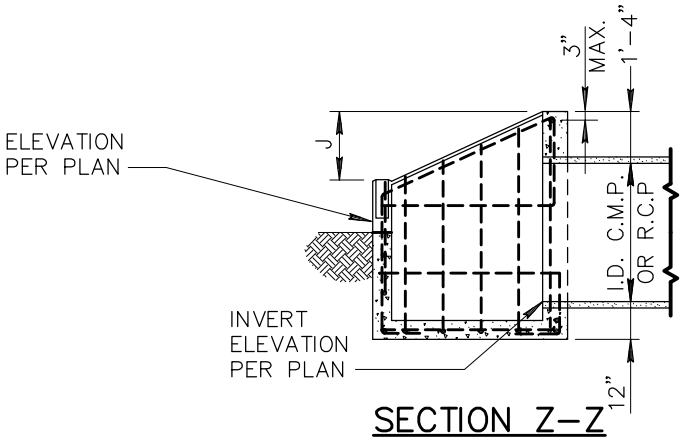

SECTION Z–Z

PIPE	DIMENSIONS							
I.D.	W		A	B	E	F	J	K
	SINGLE	DOUBLE						
18"	2'–6"	5'–2"	2'–8"	1'–3"	0'–9"	1'–3·5/8"	9"	1'–6"
24"	3'–0"	6'–6"	3'–6"	1'–7·1/2"	1'–1·1/2"	1'–11· 3/8"	11"	2'–3"
30"	3'–6"	7'–10"	4'–4"	2'–0"	1'–6"	2'–7·1/4"	1'–1"	3'–0"
36"	4'–0"	9'–2"	5'–2"	2'–4·1/2"	1'–10·1/2"	3'–3"	1'–4"	3'–9"
42"	4'–6"	10–6"	6'–0"	2'–9"	2'–3"	3'–10·3/4"	1'–6"	4'–6"

NOTES:

1. HIGH POINT OF HEADWALL SHALL NOT PROJECT MORE THAN 3" ABOVE SLOPE.
2. ALL CONCRETE SHALL BE CLASS 'A' PER SECT. 725.
3. ALL REINFORCING BARS SHALL BE NO. 4, 12" C TO C AND 3" CLEAR TO INSIDE OF FLOOR AND WALLS.

DETAIL NO.				REVISED	DETAIL NO.
501–5	MARICOPA ASSOCIATION of GOVERNMENTS	STANDARD DETAIL ENGLISH	HEADWALL DROP INLET	01–01–2014	501–5