MARICOPA ASSOCIATION of GOVERNMENTS
302 North 1st Avenue, Suite 300 ▲ Phoenix, Arizona 85003
Phone (602) 254-6300 ▲ FAX (602) 254-6490
E-mail: mag@azmag.gov ▲ Web site: www.azmag.gov

February 10, 2016

TO: Members of the MAG Building Codes Committee

FROM: Larry Taylor, Gilbert, Chair

SUBJECT: MEETING NOTIFICATION AND TRANSMITTAL OF TENTATIVE AGENDA

Wednesday, **February 17, 2016** - 2:00 pm
MAG Office, Second Floor, Ironwood Room
302 North 1st Avenue, Phoenix

A meeting of the MAG Building Codes Committee (BCC) has been scheduled for the time and place noted above. Members of the MAG Building Codes Committee may attend in person, by videoconference or by telephone conference call. Those attending by telephone conference call must make arrangements with Merry Holmgren at MAG at (602) 254-6300 at least one day prior to the meeting.

If you drive to the meeting, please park in the garage under the building and bring your ticket to the meeting; parking will be validated. For those using transit, the Regional Public Transportation Authority will provide transit tickets for your trip. For those using bicycles, please lock your bicycle in the bike rack in the garage.

Pursuant to Title II of the Americans with Disabilities Act (ADA), MAG does not discriminate on the basis of disability in admissions to or participation in its public meetings. Persons with a disability may request a reasonable accommodation, such as a sign language interpreter, by contacting Scott Wilken at the MAG office. Requests should be made as early as possible to allow time to arrange for accommodation.

Please be advised that under procedures approved by the MAG Regional Council on June 26, 1996, all MAG committees must have a quorum to conduct business. A quorum is a simple majority of the membership, or 12 people for the MAG Building Codes Committee. If you are unable to attend the meeting, please send a proxy from your jurisdiction or agency to represent you.

If you have any questions or require additional information, please contact Scott Wilken at (602) 254-6300 or swilken@azmag.gov.

TENTATIVE AGENDA
MAG Building Codes Committee Meeting
February 17, 2016

1. Call to Order	
2. Introductions	2. For information.
3. January 20, 2016 Meeting Minutes	3. Review and approve the minutes of the January 20, 2016 meeting.
4. Call to the Audience Members of the public may request to speak on items that fall under the jurisdiction of the MAG Building Codes Committee (BCC) and are not scheduled on the agenda; or, on items on the agenda for discussion but not for action. A total of 15 minutes will be provided for the Call to the Audience, with a limit of three minutes per speaker, unless the Chair requests an exception to this limit. Those requesting to comment on action agenda items may be provided an opportunity to do so at the time the agenda item is heard.	4. For information and discussion.
5. Comments From the Committee An opportunity will be provided for Building Codes Committee members to present a brief summary of current events. The Building Codes Committee is not allowed to propose, discuss, deliberate or take action at the meeting on any matter in the summary, unless the specific matter is properly noticed in accordance with the Arizona Open Meeting Law.	5. For information and discussion.

6. International Energy Conservation Code

The IECC has required envelope leakage testing (blower door testing) for single and multifamily buildings since the 2012 version. The minimum allowable leakage in Climate Zone 2B (Maricopa County) in the 2012 and 2015 IECC is 5 Air Changes Per Hour. Testing envelope leakage in multifamily buildings with attached units is challenging because of leakage between units at shared walls and ceilings/floors. This discussion will clarify the issue and make recommendations for code modifications to address this issue in multifamily buildings. Please see **Attachments One, Two, and Three**.

6. For information, discussion and possible action.

7. Geotechnical Requirements for Proprietary Deep Foundation Systems

Residential foundation repairs are often achieved by using deep foundation elements such as helical piers and other proprietary systems. The building code and listing reports contain geotechnical requirements that sometimes extend beyond the scope of the repair and cause increased costs and time delays to the homeowner. The committee will discuss local policies regarding these situations. Please see **Attachments Four, Five, and Six**.

7. For information and discussion.

8. Legislative Update

An update will be provided on legislative issues of interest.

8. For information and discussion.

9. Updated MAG Building Codes Committee Membership

We are requesting that Committee members review **Attachment Seven**, Committee Roster, sent with this agenda. Please forward any changes to Scott Wilken prior to the meeting or provide them at the meeting.

9. For information and discussion.

10. Update Survey of Code Adoption

Attachment Eight identifies the codes that member agencies have adopted. Please review this information and provide any updates to Scott Wilken.

10. For information and discussion.

11.	Topics for Future Agendas Potential topics for the next meeting will be discussed. Please share any items of discussion or presentations that you would be interested in hearing about at future meetings. The next meeting is scheduled for Wednesday February 17, 2016 at 2:00 p.m. in the MAG Ironwood Room.	11. For information and discussion.
12.	Adjournment	12.

MINUTES OF THE
MARICOPA ASSOCIATION OF GOVERNMENTS
BUILDING CODES COMMITTEE

January 20, 2016

Maricopa Association of Governments Office
302 N. 1st Ave
Ironwood Room
Phoenix, AZ

COMMITTEE MEMBERS

Larry Taylor, Gilbert, Chair
Gregory Arrington, Youngtown, Vice Chair
Dave Zellner, Apache Junction
Brett Harris, Avondale
Phil Marcotte, Buckeye
*Mike Tibbett, Carefree
#Mike Baxley, Cave Creek
#Ron Boose, Chandler
Mary Dickson, El Mirage
*Jason Penrod, Florence
*Jason Field, Fountain Hills
Tom Paradise, Glendale
*Ed Kulik, Goodyear
*Chuck Ransom, Litchfield Park
*VACANT, Maricopa
Tom Ewers, Maricopa County
Steven Hether, Mesa
Bob Lee, Paradise Valley
#Dennis Chase, Peoria
Michael Abegg, Phoenix
*Michael Williams, Queen Creek
Dustin Schroff for Michael Clack, Scottsdale
Brigham Bennett, Surprise
#Martin Perez, Tempe
Dale Crandell, Tolleson
*Kevin Bruce, Wickenburg
*Jackson Moll, Home Builders Association
Sharon Bonesteel, Salt River Project

OTHERS IN ATTENDANCE

Scott Wilken, MAG
Merry Holmgren, MAG
#Fredric Zwerg, Southwest Gas
Judd Jensen, Energy Inspectors
Joel Dickinson, Salt River Project
David Felix, Salt River Project
Scott Scharli, Salt River Project
Josh Vigh, Energy Inspectors
Grant Smedley, Salt River Project
Catherine O'Brien, Salt River Project
Daran Wastchak, DR Wastchak
Jake Hinman, Arizona Multihousing Association

*Those members neither present nor represented by proxy.
#Those members participating via audioconference

1. Call to Order

Larry Taylor, Chair, called to order the January 20, 2016 meeting of the MAG Building Codes Committee (BCC) at 2:00 p.m.

2. Introductions

Voting members Mike Baxley, Ron Boose, Dennis Chase, and Martin Perez attended via telephone conference call. All members and guests introduced themselves.

3. November 18, 2015 Meeting Minutes

Tom Ewers made a motion to approve the November 18, 2015 minutes. Dale Crandell seconded the motion, and the motion passed unanimously.

4. Call to the Audience

Josh Vigh asked what jurisdictions are planning to adopt the 2015 International Energy Conservation Code (IECC). Representatives from Paradise Valley, Scottsdale, Apache Junction, Peoria, Cave Creek, and Chandler indicated they are planning to adopt that code. Michael Abegg said that Phoenix will not adopt the 2015 IECC, but is planning to adopt about 15 to 20 amendments from the 2015 code into the 2012 code, which they currently use.

5. Comments From the Committee

There were no comments from the committee.

6. SRP Advanced Inverter Project

Sharon Bonesteel introduced the Advanced Inverter Program that Salt River Project (SRP) is planning to start. She said that the goal of the program is to simplify the permit process to install advanced inverters in the homes of their customers with solar arrays. She introduced Catherine O'Brien, who gave an overview of the program. She said that with tradition inverters, a brief outage causes the inverter to shut off completely. She said that traditional inverters also can cause the operating voltage range of the overall electrical grid to vary too much. She said the pilot project will include around one thousand solar customers using the advanced inverters, to test their effect on the grid. She talked about the three main components that will be tested in the program. She said that the reason for this presentation is to discuss what the local governments need for their permitting process to swap out the traditional inverters for the advanced inverters. Sharon Bonesteel talked about the documents that will be included in the permit package.

Tom Paradise asked about a situation in which the solar panel is at capacity and a new circuit is needed. Sharon Bonesteel said that the contractor will do a load calculation, and will either upgrade the panel or, if necessary, the house will not be eligible for the program. She said that they will not overload the panel.

7. International Energy Conservation Code

Daran Wastchak gave a presentation on a proposed amendment to the International Energy Conservation Code (IECC). He said the IECC requires that blower door testing find an air leakage that does not exceed 5 air changes per hour in the MAG region's climate zones. He said that this requirement is the same for both single-family and multifamily structures. He talked about the issues with conducting blower door tests on multifamily structures, and why achieving 5 air changes per hour is difficult or unfeasible in those structures. He said that in multifamily buildings, blower doors don't distinguish between outside-to-inside leaks (from the exterior of the building to the units) and inside-to-inside leaks (from unit to unit). He said that the test is only concerned with outside-to-inside leaks. Michael Abegg asked if the test can find the interior leaks. Daran Wastchak said that those interior leaks can be identified and addressed. He said that the energy conservation programs in Canada and Nevada have addressed this issue, with the multifamily standard higher than the single-family standard. He said that the standard in the 2009 IECC was 7 air changes per hour, and he is proposing an amendment for multifamily structures to use that standard.

Steven Hether asked if this proposal has been taken to the International Code Council (ICC). Daran Wastchak said that there is a lag in getting changes adopted into the ICC codes, so in the immediate concern he is proposing this amendment locally. He said that this proposal would cause no change in a Home Energy Rating Score (HERS) score for a multifamily unit because the inside-to-inside leaks have little to no heating or cooling loss. He said the reason is that in this area there aren't big temperature changes from outside to inside, as compared to other climate zones. Michael Abegg commented that the inside-to-inside leak spots should be fire rated, so it's interesting that they are leaking air from one unit to another. He also suggested adding a statement in the justification for the amendment that this proposal would not affect HERS scores. He asked what the proposal would affect. Daran Wastchak said that it would affect very little and would not compromise the air tightness of the exterior wall in any way. He said that this issue is occurring in every jurisdiction in every multifamily building, and he is proposing a reasonable solution to the problem caused by the letter of the code. Daran Wastchak asked how this proposal could get recommended by MAG. Scott Wilken said that the item could be put on the next meeting's agenda for a recommendation by the committee, and it would then go to MAG Management Committee and Regional Council for their approval.

Sharon Bonesteel asked about the idea of inside-to-inside leakage versus outside-to-inside leakage. She said that if air leakage is found between units, it is an indication that the fire blocking between units needs to be addressed. Tom Paradise said that fire blocking products expand in a fire, so there isn't necessarily a fire block issue simply because there is air leakage between units when there is not a fire. He said that the fire blocking doesn't necessarily need to be air tight in order to still be an effective fire block. Sharon Bonesteel pointed out that the example of the Canadian code had a twenty percent increase in allowable air change, but this proposal would have a forty percent increase. Daran Wastchak said that a smaller change is necessary in a climate like Canada's with a larger temperature difference between inside and outside. He said that the climate in the MAG region is more forgiving and allows more flexibility. He also said that the 2009 IECC had 7 air changes per hour as the standard, and he is proposing using that for multifamily buildings. Sharon Bonesteel said that there is a movement at ICC to create a separate multifamily code to address issues unique to multifamily buildings, and that a lot of those issues are energy related. She suggested comparing this proposal's language to the language being discussed as part of the 2018 code changes.

Michael Abegg asked in which jurisdictions this is an issue. Daran Wastchak said that it is an issue in all jurisdictions that are using the 2012 or 2015 IECC. Dave Zellner asked where the

proposed value of seven came from. Daran Wastchak said that it is a reasonable number that can be achieved and still provide the energy conservation that is the spirit of the code. Steven Hether said that he understands the builders do not want to pay for five blower door tests for each unit, and that they prefer to shift the cost to the resident. He asked how much more this proposal would cost the resident in energy costs over the long term. He said that the IECC was put into place to reduce energy usage, and that he would like to see this proposal vetted at the national level before adopting it here. Daran Wastchak said that he would not advocate from something that would have an adverse effect on energy usage. He said he can provide the calculations to show the effect. Dennis Chase asked if these inspections are being done at the rough stage. Daran Wastchak said that they are done then, and later, and the contractors are still struggling to meet the current standard. Michael Abegg asked what states on the west coast are doing for this issue. Daran Wastchak said that, other than Nevada, it is being ignored.

8. Legislative Update

Scott Wilken provided an update on legislative activities of interest to the committee. He discussed Senate Bill (SB) 1004, which is a regulatory exemption for garden produce grown in home, school, and community gardens. He discussed SB 1050, which would prevent municipalities from denying the producer of food products from selling those food products on their property. He also discussed House Bill (HB) 2172, which would prevent planned communities from unreasonably withholding approval of a construction project. He said that a possible bill discussed last fall regarding building inspections timeframes will not be submitted, according to the sponsoring senator. He also said that the possible bill regarding detached buildings for home-based businesses has not been submitted. He discussed HB 2107, which would allow municipalities and counties to adopt ordinances regulating "structured sober living homes," and providing specific items that must be included in such ordinances. He discussed HB 2233 which would allow public buildings to be constructed under the fire code of the municipality, county, or fire district, rather than in compliance with the state fire code.

9. Updated MAG Building Codes Committee Membership

There were no updates.

10. Updated Survey of Code Adoption

There were no updates.

11. Topics for Future Agendas

Scott Wilken said that the next agenda can include the two items discussed at this meeting as action items, as well as an item for pier fixes for foundations.

12. Adjournment

Larry Taylor said that the next meeting of the Building Codes Committee will be February 17, 2016.

Brett Harris made a motion to adjourn. Tom Ewers seconded the motion and the motion passed unanimously. The meeting was adjourned at 3:25 pm.

Maricopa Association of Governments Building Code Amendments and Standards Manual **BCAS #17**	
Title: 2012 & 2015 International Energy Conservation Code (IECC) Air Tightness Standard for Multifamily	MARICOPA ASSOCIATION of GOVERNMENTS **BCAS Manual**
Originally Reviewed by MAG Building Codes Committee: 2/17/16	
Updated by MAG Building Codes Committee:	

Modification to the 2012 and 2015 International Energy Conservation Codes:

R402.4.1.2 Testing. The building or dwelling unit shall be tested and verified as having an air leakage rate of not exceeding 5 air changes per hour <u>for detached dwelling units and 7 air changes per hour for attached dwelling units</u> in Climate Zones 1 and 2, and 3 air changes per hour in Climate Zones 3 through 8. Testing shall be conducted with a blower door at a pressure of 0.2 inches w.g. (50 Pascals). Where required by the code official, testing shall be conducted by an approved third party. A written report of the results of the test shall be signed by the party conducting the test and provided to the code official. Testing shall be performed at any time after creation of all penetrations of the building thermal envelope.

MAG Building Code Committee

Proposed MAG Standard

2012 & 2015 IECC Air Tightness Standard for Multifamily
January 21, 2016

Proposed by: Daran Wastchak
D.R. Wastchak, LLC
40 West Baseline Road, Suite 102
Tempe, Arizona 85283
(480) 350-9274
daranw@drwastchak.com

Proposed modification:

R402.4.1.2 Testing. The building or dwelling unit shall be tested and verified as having an air leakage rate ~~of~~ not exceeding 5 air changes per hour for detached dwelling units and 7 air changes per hour for attached dwelling units in Climate Zones 1 and 2, and 3 air changes per hour in Climate Zones 3 through 8. Testing shall be conducted with a blower door at a pressure of 0.2 inches w.g. (50 Pascals). Where required by the code official, testing shall be conducted by an approved third party. A written report of the results of the test shall be signed by the party conducting the test and provided to the code official. Testing shall be performed at any time after creation of all penetrations of the building thermal envelope.

Justification:

The IECC has required envelope leakage testing (blower door testing) for single and multifamily buildings since the 2012 version. The maximum allowable leakage in Climate Zone 2 (Maricopa County) is 5 air changes per hour (5 ACH50) for the IECC 2012 and 2015. Testing envelope leakage in multifamily buildings with attached units is challenging because of leakage between units at shared walls and ceilings/floors.

This anomaly has been recognized and addressed in codes in Nevada (Senate Bill 374) and Ontario Canada (2012 Building Code Compendium, issued 09-01-13) as well as the Canadian ENERGY STAR for Homes program (version 12.2 effective 02-28-14) by creating a different air change rate requirement for detached and attached units. In each instance, maximum air change rates are higher for attached dwelling units than for detached dwelling units.

It is recommended for Climate Zones 1 and 2 in Maricopa County, Arizona that the air change rate for attached dwelling units be set at the rate stipulated in the IECC 2009, i.e. 7 air changes per hour. An analysis of the impact on energy consumption and HERS scores for a sample multifamily building in Maricopa County at 5 ACH50 and 7 ACH50 indicated very little impact, with a maximum 1 point increase in HERS scores and $6 increase in annual energy consumption.

D.R. Wastchak, LLC

January 20, 2016

Air Changes Impact on Utility Bills and HERS Score

Unit Type Option	ENERGY COST Monthly	ENERGY COST Annual	HERS	ENERGY COST Monthly	ENERGY COST Annual	HERS	Delta Annual Energy	Delta HERS	Cond. Square Feet	Window Area	Window %	Thermal Envelope AGW R-Val	Thermal Envelope Ceiling R-Val	Thermal Envelope Window Specs U-Val	Thermal Envelope Window Specs SHGC	HVAC/DHW Furn AFU	HVAC/DHW DHW cap	HVAC/DHW DHW EF	HVAC/DHW SEER	HVAC/DHW Tonnage S1	HVAC/DHW Tonnage S2
Unit A1		**5 ACH50**			**7 ACH50**																
Middle	$65	$778	57	$65	$779	57	$1	0	505	60	12%	R-23	R-30	0.52	0.25	N/A	30	.80	14	1.5	
Top	$65	$783	56	$65	$784	56	$1	0	505	60	12%	R-23	R-38	0.52	0.25	N/A	30	.80	14	1.5	
Unit A2																					
Slab	$68	$814	55	$68	$816	55	$2	0	651	60	9%	R-23	R-30	0.52	0.25	N/A	30	.80	14	1.5	
Unit B1																					
Slab	$72	$861	57	$72	$864	58	$3	1	762	90	12%	R-23	R-30	0.52	0.25	N/A	30	.80	14	2	
Middle	$70	$842	56	$70	$845	56	$3	0	762	90	12%	R-23	R-30	0.52	0.25	N/A	30	.80	14	2	
Top	$71	$856	56	$72	$859	56	$3	0	762	90	12%	R-23	R-38	0.52	0.25	N/A	30	.80	14	2	
Unit B2																					
Slab	$72	$862	57	$72	$864	57	$2	0	763	90	12%	R-23	R-30	0.52	0.25	N/A	30	.80	14	2	
Unit C1																					
Slab	$84	$1,008	57	$84	$1,012	58	$4	1	1047	120	11%	R-23	R-30	0.52	0.25	N/A	30	.80	14	2.5	
Middle	$82	$985	56	$82	$988	57	$3	1	1047	120	11%	R-23	R-30	0.52	0.25	N/A	30	.80	14	2.5	
Top	$84	$1,004	56	$84	$1,007	56	$3	0	1047	120	11%	R-23	R-38	0.52	0.25	N/A	30	.80	14	2.5	
Unit C2																					
Middle	$86	$1,031	52	$86	$1,035	52	$4	0	1176	120	10%	R-23	R-30	0.52	0.25	N/A	30	.80	14	2.5	
Top	$88	$1,052	52	$88	$1,057	52	$5	0	1176	120	10%	R-23	R-38	0.52	0.25	N/A	30	.80	14	2.5	
Unit D1																					
Slab	$97	$1,163	56	$97	$1,168	56	$5	0	1390	150	11%	R-23	R-30	0.52	0.25	N/A	30	.80	14	2.5	
Middle	$94	$1,129	55	$95	$1,134	55	$5	0	1390	150	11%	R-23	R-30	0.52	0.25	N/A	30	.80	14	2.5	
Top	$96	$1,154	54	$97	$1,159	55	$5	1	1390	150	11%	R-23	R-38	0.52	0.25	N/A	30	.80	14	2.5	
Unit D2																					
Middle	$97	$1,164	52	$97	$1,169	52	$5	0	1474	150	10%	R-23	R-30	0.52	0.25	N/A	30	.80	14	3	
Unit D3																					
Middle	$99	$1,189	50	$100	$1,195	51	$6	1	1602	150	9%	R-23	R-30	0.52	0.25	N/A	30	.80	14	3	
Top	$102	$1,218	50	$102	$1,224	51	$6	1	1602	150	9%	R-23	R-38	0.52	0.25	N/A	30	.80	14	3	

Structural Engineer	Geotechnical Engineer
Structural Calculations –ESR 4.1.1	Suitability of helical foundation system - ESR 4.1.1
Loads – Load Combinations	Center-to-center spacing/Group Effects
Eccentricity	Axial Tension/compression estimates
Maximum Spans	Expected Total foundation settlement
Concrete Foundation Design – ESR 4.1.2 & 5.11	Expected Differential foundation settlement
Bracket Reactions and Eccentricity	Report must address:
Construction Details – ESR 4.1.1 & 5.10	1. Site Plot
Lateral Bracing	2. Record of soil boring
	3. Soil profile
	4. Groundwater table
	5. Soil properties – Firm or Soft; ESR 5.5 soil resistivity, pH, sulfate concentrations
	6. Differential settlement/ Varying soil strength/ adjacent loads effects
	7. Inspection procedures
	8. Load test requirements
	9. Questionable soil characteristics
	Continuous Special Inspections - ESR 4.3
	Required galvanization – ESR 5.6
	IBC 1803.5.5 & 1803.6

EVALUATION REPORT Number: 289

Originally Issued: 01/16/2015 **Valid Through: 01/31/2016**

EVALUATION SUBJECT:
FOUNDATION SUPPORTWORKS
PP288 PUSH PIER SYSTEM

REPORT HOLDER:
Foundation Supportworks, Inc.
12330 Cary Circle
Omaha, Nebraska 68128
(800) 281-8545
www.foundationsupportworks.com
jeff.kortan@foundationsupportworks.com

CSI Division: 31 00 00 - EARTHWORK
CSI Section: 31 62 00 – Driven Piles

1.0 SCOPE OF EVALUATION

1.1 Compliance to the following codes & regulations:
- 2009 International Building Code® (IBC)
- 2012 International Building Code® (IBC)
- 2015 International Building Code® (IBC)

1.2 Evaluated in accordance with:
- IBC Chapter 18

1.3 Properties assessed:
- Structural
- Geotechnical

2.0 PRODUCT USE

Foundation Supportworks, Inc. (FSI) Model PP288 push pier systems are used to support foundations of existing structures or to provide additional axial compression capacity to existing foundation systems. The systems are alternatives to driven piles described in IBC Section 1810.3.1.4

3.0 PRODUCT DESCRIPTION

3.1 Product information: FSI Model PP288 push pier systems consist of an under-footing bracket (side load), external sleeve, starter tube with friction-reduction collar, and push pier tube sections with slip-fit couplings. The under-footing bracket is secured against and below the existing footing while pier sections are hydraulically driven (pushed) through the bracket and into the soil below using the combined structural weight and any contributory soil load as drive resistance. Pier sections are added and driven until a suitable load bearing stratum is encountered. The weight of the structure is then transferred through the foundation brackets and piers, and to firm load bearing soil or bedrock.

3.2 Material information

3.2.1 Retrofit Bracket Assemblies FS288B and FS288BL: The FS288B and FS288BL bracket assemblies consist of an FS288B or FS288BL bracket, an external pipe sleeve (FS288ES48), a cap plate (FS288C), two threaded rods, and matching nuts. The assemblies are illustrated in Figure 1.

3.2.1.1 FS288B and FS288BL Brackets: The FS288B and FS288BL brackets are constructed from factory-welded, 0.250-inch-, 0.375-inch-, and 0.500-inch-thick (6.4 mm, 9.5 mm, and 12.7 mm) steel plates conforming to ASTM A36, with a minimum yield strength of 36 ksi (248 MPa) and a minimum tensile strength of 58 ksi (400 MPa). The available bracket finish is either plain steel or hot-dip galvanized in accordance with ASTM A123.

3.2.1.2 FS288ES48 External Sleeve: The external sleeve (FS288ES48) is manufactured from a 48-inch-long (1219 mm), $3^1/_2$-inch outside diameter (89 mm) and 0.216-inch (5.49 mm) nominal wall thickness pipe conforming to ASTM A500, as specified in the quality control documentation. One end of the external sleeve has a 1.00-inch long (25.4 mm) section trumpeted to a final outer diameter of 4.00 inches (101.6 mm). The sleeve finish is either plain steel or hot-dip galvanized in accordance with ASTM A123.

3.2.1.3 FS288C Cap Plate: The FS288C cap plate is manufactured from a $^1/_2$-inch-long (12.7 mm), $3^1/_2$-inch outside diameter (89 mm), 0.216-inch (5.49 mm) nominal wall thickness steel pipe that is factory-welded to a 1-inch-thick (25.4 mm), 5-inch-wide (127 mm), 9-inch-long (229 mm) steel plate. The $^1/_2$-inch-long (12.7 mm) steel pipe conforms to ASTM A53, Types E and S, Grade B, having a minimum yield strength of 35 ksi (241 MPa) and a minimum tensile strength of 60 ksi (413 MPa). The steel cap plate conforms to ASTM A572, Grade 50 (345 MPa), having a minimum yield strength of 50 ksi (345 MPa) and a minimum tensile strength of 65 ksi (448 MPa). The available cap plate assembly finish is either plain steel or hot-dip galvanized in accordance with ASTM A123.

3.2.1.4 Threaded Rod and Nuts: The cap plate is attached to the retrofit bracket with two $^3/_4$-inch-diameter by 16-inch-long (19.1 mm by 406 mm) threaded rods, and matching $^3/_4$-inch (19.1 mm) heavy hex nuts. The $^3/_4$-inch-diameter (19.1 mm) steel threaded rods conform to ASTM A193, Grade B7, having a minimum yield strength of 105 ksi (724 MPa) and a minimum tensile strength of 125 ksi (862 MPa). The matching $^3/_4$-inch-diameter (19.1 mm) steel heavy hex nuts conform to ASTM A563 Grade DH or DH3, or ASTM A194 Grade 2H. The threaded rods and nuts are zinc-coated in accordance with ASTM B633, with coating classification Fe/Zn 8.

The product described in this Uniform Evaluation Service (UES) Report has been evaluated as an alternative material, design or method of construction in order to satisfy and comply with the intent of the provision of the code, as noted in this report, and for at least equivalence to that prescribed in the code in quality, strength, effectiveness, fire resistance, durability and safely, as applicable, in accordance with IBC Section 104.11.

Copyright © 2014 by International Association of Plumbing and Mechanical Officials. All rights reserved. Printed in the United States. No part of this publication may be reproduced, stored in an electronic retrieval system, or transmitted, in any form or by any means, electronic, mechanical, photocopying, recording or otherwise, without the prior written permission of the publisher. Ph: 1-877-4IESRPT • Fax: 909.472.4171 • web: www.uniform-es.org • 5001 East Philadelphia Street, Ontario, California 91761-2816 – USA

3.2.2 Starter and Pier Tube Sections: The central steel shaft of the starter and pier tube sections are 2.875-inch outer diameter (73 mm) by 0.165-inch (4.19 mm) nominal wall thickness hollow structural section in conformance with ASTM A500 as specified in the quality control documentation. The starter tube includes a 1.00-inch-long (25.4 mm) by 3.375-inch (85.7 mm) outer diameter friction-reduction collar machined from steel conforming to ASTM A36 with a minimum yield strength of 36 ksi (248 MPa) and a minimum tensile strength of 58 ksi (400 MPa). The starter tube and pier tube shaft finishes are triple coated in-line galvanized.

3.2.3 Shaft Couplings: The shaft coupling material is factory crimped or plug-welded to one end of the tube section and consists of 2.50-inch (63.5 mm) outer diameter by 0.180-inch (4.57 mm) nominal wall thickness hollow structural section in conformance with ASTM A53 Grade B, Type E & S with a minimum yield strength of 35 ksi (241 MPa) and a minimum tensile strength of 60 ksi (413 MPa). The pier tube shaft coupling finish is plain steel.

4.0 DESIGN AND INSTALLATION

4.1 General: Structural calculations (analysis and design) and drawings, prepared by a registered design professional, shall be approved by the code official for each project, and shall be based on accepted engineering principles, as described in IBC Section 1604.4, and shall conform to IBC Section 1810. The design methods for the steel components are Allowable Strength Design (ASD), described in IBC Section 1602 and AISC 360 Section B3.4. The structural analysis shall consider all applicable internal forces due to applied loads, structural eccentricity and maximum span(s) between push pier foundations. The structural analysis, the IBC, and this report shall be used to select an appropriate push pier system.

The ASD capacities of FSI push pier system components are indicated in Table 2. The geotechnical investigation shall address the suitability of the push pier system for the specific project. The requirements for deep foundations in IBC Section 1803.5.5 shall be considered. In addition, effects on the supported foundation and structure and group effects on the pile-soil capacity shall be considered. The investigation shall provide estimates of the axial compression capacities for the push piers, and the expected total and differential settlements due to single pier or pier group, as applicable.

A written report of the geotechnical investigation shall be submitted to the code official as one of the required submittal documents, prescribed in IBC Section 107, at the time of the permit application. The geotechnical report shall comply with provisions in IBC Section 1803.6 and also include, but need not be limited to, the following information:

1. Information on groundwater table, frost depth and corrosion-related parameters, as described in Section 5.5 of this report.

2. Soil properties, including those affecting the design such as support conditions for the piers.

3. Recommendations for design criteria.

4. Any questionable soil characteristics and special design provisions, as necessary.

4.1.2 Bracket Capacity (P1): Only localized limit state of concrete bearing strength in compression has been evaluated in this evaluation report for compliance with IBC Chapter 19 and ACI 318. All other structural requirements in IBC Chapter 19 and ACI 318 applying to the concrete foundation, such as those limit states described in ACI 318 (anchorage per Appendix D, punching (two-way) shear, beam (one-way) shear, and flexural (bending) related limit states), have not been evaluated in this evaluation report. The concrete foundation shall be designed and justified to the satisfaction of the code official with due consideration to structural detailing, applicable limit states, and the direction and eccentricity of applied loads, including reactions provided by the brackets, acting on the concrete foundation.

4.1.3 Shaft Capacity (P2): The top of shafts shall be braced as prescribed in Section 1810.2.2 of the IBC. In accordance with Section 1810.2.1 of the IBC, any soil other than fluid soil shall be deemed to afford sufficient lateral support to prevent buckling of systems that are braced. When piers are standing in air, water or fluid soils, the unbraced length is defined as the length of piers that is standing in air, water or fluid soils plus an additional 5 feet (1524 mm) when embedded into firm soil or an additional 10 feet (3048 mm) when embedded into soft soil. Firm soils shall be defined as any soil with a Standard Penetration Test (SPT) blow count of five or greater. Soft soil shall be defined as any soil with a SPT blow count greater than zero and less than five. Fluid soils shall be defined as any soil with a SPT blow count of zero [weight of hammer (WOH) or weight of rods (WOR)]. The SPT blow counts shall be determined in accordance with ASTM D1586. For fully braced conditions where the pier is installed in accordance with Section 1810.2.2 of the IBC, and piers do not stand in air, water, or fluid soils, the shaft capacities shall not exceed the ASD shaft compression capacities shown in Table 2. Shaft capacities of push pier foundation systems in air, water or fluid soils, shall be determined by a registered design professional.

The elastic shortening/lengthening of the pier shaft will be

controlled by the variation of applied loads from the pier lock-off load and the mechanical and geometrical properties of the $2^7/_8$-inch-diameter (73 mm) round structural tubing. The shaft elastic shortening can be determined from equation Eq.-1:

$$\Delta_{shaft} = \frac{\Delta P \times L}{A \times E} \qquad \text{(Eq. 1)}$$

Where:

Δ_{shaft} = change in shaft length due to elastic shortening (inches/mm)
ΔP = change in load between the applied load and the pier lock-off load (lbf/N)
L = pier shaft length (inches/mm)
A = shaft cross-sectional area (in^2/mm^2) (taken from Table 1)
E = shaft steel modulus of elasticity (29,000,000 psi/199,900 MPa)

4.1.4 Soil Capacity (P4): For determination of allowable soil capacity in axial compression, a minimum factor of safety of 2.0 shall be applied to the final drive force. The final drive force shall not exceed the maximum drive force rating of the applicable PP288 push pier system as shown in Table 2.

4.1.5 System Capacity: The ASD allowable capacity of the FSI push pier foundation system in compression depends upon the analysis of interaction of brackets, shafts, and soils; and shall be the lowest value of P1, P2, and P4 as shown in Table 2.

4.2 Installation

4.2.1 General: The FSI push pier foundation systems shall be installed by FSI trained and certified installers. The FSI push pier foundation systems shall be installed in accordance with this section (Section 4.2), site-specific approved construction documents (engineering drawings and specifications), and the manufacturer's written installation instructions. In case of conflicts, the more restrictive governs.

4.2.2 FS288B and FS288BL Retrofit Bracket Installation:

1. An area shall be excavated approximately 3 feet (914 mm) square and to a depth approximately 9 to 13 inches (229 to 330 mm) below the bottom of footing at the push pier location. The soil shall be removed below the bottom of footing to about 9 inches (229 mm) from the footing face in the area where the bracket bearing plate will be placed. The vertical and bottom faces of the footing shall, to the extent possible, be smooth and at right angles to each other for the mounting of the support bracket. The concrete surfaces shall be free of all soil, debris and loose concrete so as to provide a full and firm contact of the retrofit bracket.

2. Notching of the footings may be needed to place the retrofit bracket directly under the wall/column. Notching shall be performed, however, only with the acceptance of the registered design professional and the approval of the code official.

3. The bracket shall be placed under the footing and raised into position with the horizontal and vertical bearing plates in full contact with the concrete surfaces. The bracket shall be temporarily held in place using wood cribbing or other mechanical means. The under-footing brackets do not require mechanical anchorage to the concrete foundation.

4. The external sleeve shall be placed over the starter tube and both the external sleeve and starter tube shall be inserted through the bracket from the top. Care shall be taken that the sleeve and starter are properly aligned and extend past both the top and bottom plates of the bracket.

5. The drive stand shall be secured to the bracket, the hydraulic drive cylinder attached to the drive stand and connected to the hydraulic operating system.

6. The drive stand shall be aligned by activating the hydraulics and extending the drive cylinder rod to make slight contact with the starter tube section. A digital level, protractor or other device shall be used to check alignment of the drive stand, sleeve, starter and bracket. The alignment shall be adjusted as necessary to allow a 3.0 ±1.0-degree installation angle. Temporary cribbing may be used between the drive stand and the foundation wall to set the correct installation angle while advancing the starter tube and external sleeve.

7. The external sleeve and starter tube shall be driven together until the trumpeted end of the sleeve is seated at the top of the bracket. Pier tubes shall then coupled and pushed through the external sleeve. When the maximum cylinder stroke has been reached, the cylinder shall be retracted, a drive tube tool shall be set in place, and the push shall be completed to the top of the

bracket or external sleeve.

8. The drive pressure at the final stroke of each pier tube section shall be recorded. This process shall continue until the pre-determined drive pressure (final drive force) is achieved or the structure starts to lift. After reaching the final drive force, the pressure shall be released from the hydraulic system and the drive stand and drive cylinder shall be removed from the bracket. The drive process shall be repeated at each of the proposed pier locations. The final drive force shall not exceed the maximum drive force rating of the push pier system as shown in Table 2.

9. A lift cylinder shall be connected to each retrofit bracket assembly to lift the structure to the desired elevation and/or transfer the designated portion of the foundation loads to the push pier system.

4.3 Special Inspection: Continuous special inspection in accordance with Section 1704.8 of the 2009 IBC or Section 1705.7 of the 2012 and 2015 IBC shall be provided for the installation of foundation piers and foundation brackets. Items to be confirmed by the special inspector include, but are not limited to, the manufacturer's certification of installers, verification of the product manufacturer, push pier bracket and component configuration and identification, inclination and position of the push piers, final drive force, push pier lock-off load, depth of the foundation piers, and compliance of the installation with the approved construction documents and this evaluation report.

In lieu of continuous special inspection, periodic special inspection as defined in IBC Section 202 is permitted, provided that all following requirements identified below, are satisfied: (1) The installers are certified by the manufacturer and the evidence of installer training and certification by the report holder are provided to the code official; (2) Structural observations in accordance with the 2009 IBC Section 1710, 2012 IBC Section 1704.5, or 2015 IBC Section 1704.6 are provided; (3) A periodic inspection schedule, as part of the statement of special inspection, prepared by a registered design professional, is submitted to and approved by the code official. As a minimum, the periodic inspection schedule shall include, but not be limited to, the following:

1. Before the start of work: Verify manufacturer, verify installer's certification by the manufacturer, and confirm push pier and bracket configuration compliance with the approved construction documents and this evaluation report.

2. Installation of the first push pier foundation system: Verify that the location, inclination, final drive force, push pier lock-off load and depth of the push piers comply with the approved construction documents and this evaluation report. Verify that installers keep an installation log.

3. First connection to the building structure: Verify that installation of brackets comply with the approved construction documents and this evaluation report.

4. End of work: Verify that the installation log complies with requirements specified in the approved construction documents. Verify that installation of all structural connections complies with approved construction documents and this evaluation report.

5.0 LIMITATIONS

FSI Model PP288 push pier foundation systems described in this report comply with, or are suitable alternatives to what is specified in, the code listed in Section 1.0 of this report, subject to the following conditions:

5.1 The FSI push pier foundation systems are manufactured, identified and installed in accordance with this report, approved construction documents (engineering drawings and specifications), and the manufacturer's published installation instructions. In case of conflicts, the more restrictive governs.

5.2 The FSI push pier foundation systems have been evaluated for support of structures assigned to Seismic Design Categories A, B, and C in accordance with IBC Section 1613. Push pier foundation systems that support structures assigned to Seismic Design Category D, E or F, or are located in Site Class E or F, are outside the scope of this report.

5.3 Installations of the push pier foundation systems are limited to regions of concrete members where analysis indicates no cracking occurs at service load levels.

5.4 The push pier brackets shall be used only to support structures that are laterally braced as defined in Section 1810.2.2 of the IBC.

5.5 The push pier foundation systems have not been evaluated for use in soil conditions that are indicative of a potential pier deterioration or corrosion situation as defined by the following: (1) soil resistivity less than

1,000 ohm-cm; (2) soil pH less than 5.5; (3) soils with high organic content; (4) soil sulfate concentrations greater than 1,000 ppm; (5) soils located in a landfill, or (6) soil containing mine waste.

5.6 Zinc-coated steel and bare steel components shall not be combined in the same system, except where the sacrificial thickness (T_s) for the zinc-coated components is taken as that given for bare steel components. All push pier foundation components shall be galvanically isolated from concrete reinforcing steel, building structural steel, or any other metal building components.

5.7 The push pier shafts shall be installed at a maximum angle of 3.0 ± 1.0-degrees from the vertical.

5.8 Special inspection is provided in accordance with Section 4.3 of this report.

5.9 Engineering calculations and drawings, in accordance with recognized engineering principles, as described in IBC Section 1604.4, prepared by a registered design professional, are provided to, and are approved by the code official.

5.10 The adequacy of the concrete structures that are connected to the FSI brackets shall be verified by a registered design professional, in accordance with applicable code provisions, such as Chapter 15 of ACI 318 and Chapter 18 of IBC, and subject to the approval of the code official.

5.11 A geotechnical investigation report for each project site shall be provided to the code official for approval in accordance with Section 4.1.1 of this report.

5.12 When using the alternative basic load combinations prescribed in Section 1605.3.2, the allowable stress increases permitted by material chapters of the IBC (including Chapter 18) or the referenced standards are prohibited.

5.13 Evaluation of compliance with Section 1810.3.11.1 of the IBC for buildings assigned to Seismic Design Category C, and with Section 1810.3.6 of the IBC for all buildings, is outside the scope of this evaluation report. Such compliance shall be addressed by a registered design professional for each site, and the work of the design professional shall be subjected to approval of the code official.

5.14 Settlement of push piers is beyond the scope of this evaluation report, and shall be determined by a registered design professional as required in Section 1810.2.3 of the IBC.

5.15 The FSI push pier foundation system components are manufactured at the following facilities: Distefano Technology & Manufacturing Company, 3838 South 108th Street, Omaha, Nebraska 68144; Behlen Manufacturing Company, 4025 East 23rd Street, Columbus, Nebraska 68601; PowerBrace, 5153 Northeast 17th Street, Des Moines, Iowa 50313; and TSA Manufacturing, 14901 Chandler Road, Omaha, Nebraska 68138; under a quality control program with inspections by Benchmark Consulting & Inspection, L.L.C. (AA-660).

6.0 SUBSTANTIATING DATA

Data in accordance with IBC Section 1810.3.1.4.

- Test Reports for compression loading Push Pier Foundation System
- Engineering Calculations

7.0 IDENTIFICATION

The FSI push pier foundation system components described in this report are identified by labels that include the report holder's name (Foundation Supportworks, Inc.); the name and address of Distefano Technology & Manufacturing Company, Behlen Manufacturing Company, PowerBrace or TSA Manufacturing; the product name, the model number (PP288); the part number; the IAPMO UES evaluation report number (ER-289); and the third-party inspection agency (Benchmark Consulting & Inspection, L.L.C.)

IAPMO ES ® or UES ™

IAPMO ER #289

Brian Gerber, P.E., S.E.
Vice President, Technical Operations
Uniform Evaluation Service

Richard Beck, PE, CBO, MCP
Vice President, Uniform Evaluation Service

GP Russ Chaney

EVALUATION REPORT Number: 289

Originally Issued: 01/16/2015 **Valid Through: 01/31/2016**

CEO, The IAPMO Group

For additional information about this evaluation report please visit www.uniform-es.org or email at info@uniform-es.org

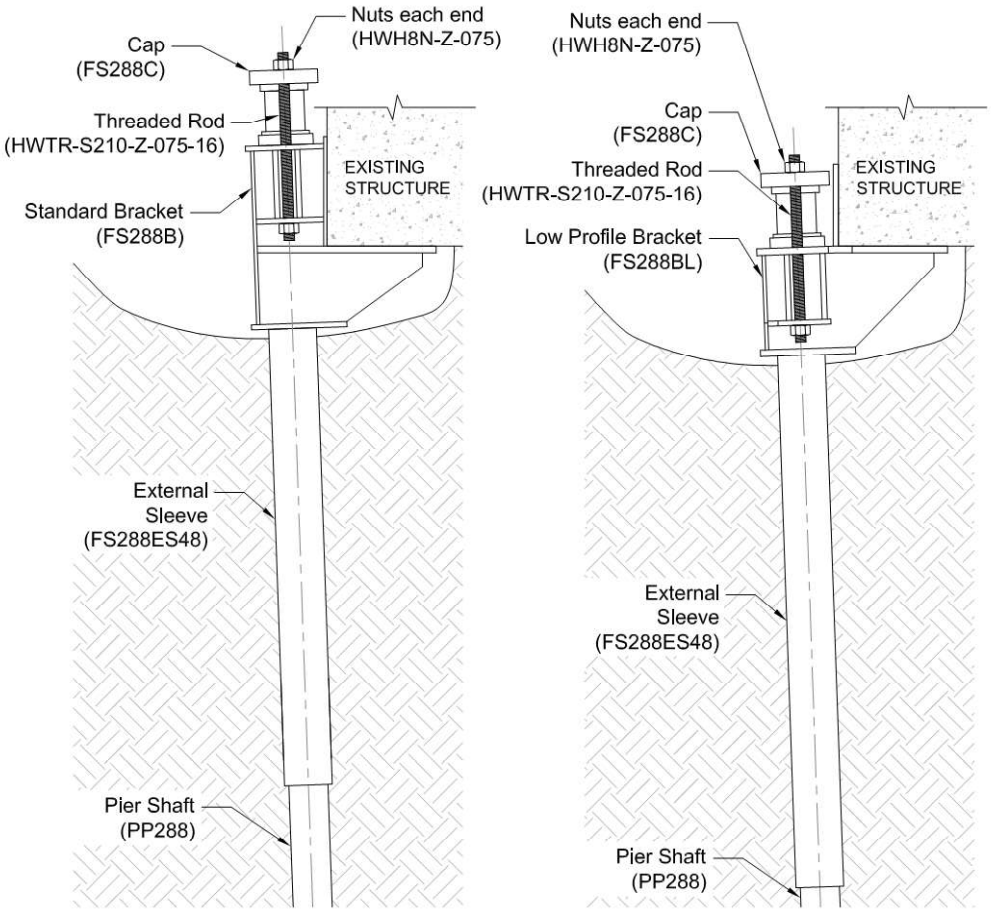

Figure 1: FS288B and FS288BL Retrofit Bracket System Components

TABLE 1 - MECHANICAL PROPERTIES OF 2.875-INCH DIAMETER PUSH PIER SHAFTS

Mechanical Properties	Un-corroded	After 50 Year Corrosion Loss
Steel Minimum Yield Strength, F_y	50 ksi	50 ksi
Steel Minimum Ultimate Strength, F_u	55 ksi	55 ksi
Modulus of Elasticity, E	29,000 ksi	29,000 ksi
Nominal Wall Thickness	0.165 in.	0.165 in.
Design Wall Thickness	0.153 in.	0.117 in.
Outside Diameter, OD	2.875 in.	2.839 in.
Inside Diameter, ID	2.569 in.	2.605 in.
Cross Sectional Area, A	1.31 in^2	1.00 in^2
Moment of Inertia, I	1.22 in^4	0.93 in^4
Radius of Gyration, r	0.96 in.	0.96 in.
Elastic Section Modulus, S	0.85 in^3	0.65 in^3
Plastic Section Modulus, Z	1.14 in^3	0.87 in^3

For SI: 1 inch = 25.4 mm, 1 ksi = 6.895 MPa, 1 lbf = 4.448 N

TABLE 2 - PP288 (WITH RETROFIT BRACKET) ASD COMPRESSION CAPACITIES

Bracket Part No.[1]	Sleeve Part No.[1]	PP288 Bracket Description	Allowable Compression Capacity (kips)			
			Bracket (P1)[2]	Shaft (P2)[3]	Soil (P4)[4]	Foundation System[5]
FS288B or FS288B-G	FS288ES48 or FS288ES48-G	Standard Bracket w/48" Sleeve	28.5	29.4	30.0	28.5
FS288BL or FS288BL-G	FS288ES48 or FS288ES48-G	Low Profile Bracket w/48" Sleeve	25.4	29.4	30.0	25.4

For SI: 1 inch = 25.4 mm, 1 kip = 1,000 lbf = 4.448 kN

[1]Part numbers with "G" suffix indicate hot-dip galvanized coating. Part numbers without a "G" suffix indicate plain steel.

[2]Bracket capacities are based on full-scale load tests and assumes a minimum concrete compressive strength (f'_c) of 2,500 psi (17.24 MPa).

[3]Shaft capacities are applicable only to foundation systems that are fully braced as described in Section 4.1.3.

[4]Soil capacities are determined by taking the final drive force during installation and dividing it by a minimum factor of safety of 2.0. Maximum drive force shall not exceed 60.0 kips.

[5]Foundation system allowable capacities are based on the lowest of P1, P2, and P4 listed in this table. Section 4.1.5 describes additional requirements.

ICC EVALUATION SERVICE

Most Widely Accepted and Trusted

ICC-ES Report

ESR-3074

ICC-ES | (800) 423-6587 | (562) 699-0543 | www.icc-es.org

Reissued 07/2015
This report is subject to renewal 07/2017.

DIVISION: 31 00 00—EARTHWORK

SECTION: 31 63 00—BORED PILES

REPORT HOLDER:

FOUNDATION SUPPORTWORKS, INC.

12330 CARY CIRCLE
OMAHA, NEBRASKA 68128

EVALUATION SUBJECT:

FOUNDATION SUPPORTWORKS HELICAL FOUNDATION SYSTEMS

Look for the trusted marks of Conformity!

"2014 Recipient of Prestigious Western States Seismic Policy Council (WSSPC) Award in Excellence"

A Subsidiary of ICC INTERNATIONAL CODE COUNCIL

ICC-ES Evaluation Reports are not to be construed as representing aesthetics or any other attributes not specifically addressed, nor are they to be construed as an endorsement of the subject of the report or a recommendation for its use. There is no warranty by ICC Evaluation Service, LLC, express or implied, as to any finding or other matter in this report, or as to any product covered by the report.

ANSI Accredited Program PRODUCT CERTIFICATION #1000

SCC Accredited CB-P/S OCPS Accrédité CCN

Copyright © 2015

ICC EVALUATION SERVICE
Most Widely Accepted and Trusted

ICC-ES Evaluation Report

ESR-3074

Reissued July 2015
This report is subject to renewal July 2017.

www.icc-es.org | (800) 423-6587 | (562) 699-0543 *A Subsidiary of the International Code Council®*

DIVISION: 31 00 00—EARTHWORK
Section: 31 63 00—Bored Piles

REPORT HOLDER:

FOUNDATION SUPPORTWORKS, INC.
12330 CARY CIRCLE
OMAHA, NEBRASKA 68128
(800) 281-5845
www.foundationsupportworks.com
jeff.kortan@foundationsupportworks.com

EVALUATION SUBJECT:

FOUNDATION SUPPORTWORKS HELICAL FOUNDATION SYSTEMS

1.0 EVALUATION SCOPE

Compliance with the following codes:

- 2012, 2009 and 2006 *International Building Code®* (IBC)
- 2013 *Abu Dhabi International Building Code* (ADIBC)†

†The ADIBC is based on the 2009 IBC. 2009 IBC code sections referenced in this report are the same sections in the ADIBC.

Properties evaluated:

- Structural
- Geotechnical

2.0 USES

Foundation Supportworks, Inc. (FSI), Model HP288 Helical Foundation Systems are used either to underpin foundations of existing structures or to form deep foundations for new structures, and are designed to transfer axial compression and axial tension loads from the supported structures to suitable soil bearing strata.

3.0 DESCRIPTION

3.1 General:

The FSI Model HP288 helical foundation systems consist of a central lead shaft with one or more helical-shaped steel bearing plates, extension shafts, which may or may not consist of helical bearing plates, shaft couplings that connect multiple shaft sections, and a bracket that allows for attachment to the supported structure. The shafts with helix bearing plates are screwed into the ground by application of torsion and the shaft is extended until a desired depth and/or a suitable soil or bedrock bearing stratum is reached.

3.2 System Components:

The FSI Model HP288 helical foundation systems include a lead shaft (HP288L), extension shafts (HP288E), Type A side-load brackets (FS288B and FS288BL), and Type B direct-load brackets (HP288NCB and HP288NCB8), for attachment to concrete foundations.

3.2.1 Helical Lead Sections and Extensions: The FSI helical pile lead sections consist of one or more helical-shaped circular steel plates factory-welded to a central steel shaft. The depth of the helical piles in soil is typically extended by adding one or more steel shaft extensions that are mechanically connected together by couplings, to form one, continuous steel pile.

The central steel shaft of the lead and extension sections is a round, $2^{7}/_{8}$-inch-outside-diameter (73 mm), 0.276-inch-nominal-wall-thickness, hollow structural section. The various shaft lead and extension configurations are listed in Table 5.

Each helical steel bearing plate (helix) is 0.375 inch (9.5 mm) thick, and has a 3-inch (76 mm) pitch and spiral edge geometry with an outer diameter of 8, 10, 12 or 14 inches (203, 254, 305 or 356 mm). The helices are welded to the helical shaft. The lead helix is located about 4 inches from the tip of the shaft lead section. The extensions may consist of the shaft only or include helix plates.

The extension section couplings consist of a round, 6-inch-long (152.4 mm), $3^{1}/_{2}$-inch-outside-diameter (89 mm), 0.281-inch-nominal-wall-thickness, hollow structural section outer sleeve, and two $^{3}/_{4}$-inch-diameter (19.1 mm) standard hex threaded bolts and matching standard hex jam nuts. The pipe sleeve is factory-welded to the end of the extension section. (See Figure 3.)

3.2.2 Brackets: Brackets are constructed with factory-welded steel plate and steel pipe components. The different brackets are described in Sections 3.2.2.1 through 3.2.2.2.

3.2.2.1 Retrofit Bracket Assemblies FS288B and FS288BL: The FS288B and FS288BL bracket assemblies are designed for use with the HP288 helical shaft and are used to transfer axial compressive loading from existing concrete foundations to the HP288 helical piles. The bracket assembly consists of an FS288B or FS288BL bracket, an external pipe sleeve (FS288ES30 or FS288ES48), a cap plate (FS288C), two threaded rods and matching nuts. (See Figure 1.)

The FS288B and FS288BL brackets are constructed from factory-welded, 0.250-inch-, 0.375-inch- and 0.500-inch-thick (6.4 mm, 9.5 mm, and12.7 mm) steel plates.

The external sleeve (FS288ES30) is manufactured from a 30-inch-long (762 mm), $3^{1}/_{2}$-inch-outside-diameter (89 mm) and 0.216-inch-nominal-wall-thickness pipe with a factory-welded end ring which consists of a $^{3}/_{4}$-inch-long (19.1 mm), 4.0-inch-outside-diameter (102 mm) and 0.226-inch-nominal-wall-thickness pipe. The FS288ES48

ICC-ES Evaluation Reports are not to be construed as representing aesthetics or any other attributes not specifically addressed, nor are they to be construed as an endorsement of the subject of the report or a recommendation for its use. There is no warranty by ICC Evaluation Service, LLC, express or implied, as to any finding or other matter in this report, or as to any product covered by the report.

Copyright © 2015

external sleeve is identical to the FS288ES30 except that the FS288ES48 is 48 inches (1219 mm) long.

The FS288C cap plate assembly is manufactured from a $^1/_2$-inch-long (12.7 mm), $3^1/_2$-inch-outside-diameter (89 mm), 0.216-inch-nominal-wall-thickness steel pipe that is factory-welded to a 1-inch-thick (25.4 mm), 5-inch-wide (127 mm), 9-inch-long (229 mm) steel plate. The cap plate is attached to the retrofit bracket with two $^3/_4$-inch-diameter-by-16-inch-long (19.1 mm by 406 mm) threaded rods, and matching $^3/_4$-inch (19.1 mm) heavy hex nuts. (See Figure 1.)

3.2.2.2 New Construction Brackets HP288NCB and HP288NCB8: HP288NCB and HP288NCB8 brackets are designed for embedment in cast-in-place concrete foundations. The brackets are used to support axial tensile and compressive loads that are concentric with the longitudinal axis of the shaft. (See Figure 2.)

The HP288NCB bracket is manufactured from a 5.06-inch-long (128.5 mm), $3^1/_2$-inch-outside-diameter (89 mm), 0.250-inch-nominal-wall-thickness steel pipe sleeve which is factory-welded to a $^3/_4$-inch-thick (19.1 mm), 6-inch-square (152 mm) steel cap plate. The bracket is attached to the shaft with two $^3/_4$-inch-diameter (19.1 mm) standard hex threaded bolts and with matching $^3/_4$-inch (19.1 mm) standard hex jam nuts. (See Figure 2.)

The HP288NCB8 bracket is identical to the HP288NCB bracket except that the HP288NCB8 cap plate is an 8-inch-square (203 mm) steel plate. (See Figure 2.)

3.3 Material Specifications:

3.3.1 Lead and Extension Shafts: The leads and extensions are carbon steel round structural tubes that conform to ASTM A500, Grade B or C, having a minimum yield strength of 60 ksi (413 MPa) and a minimum tensile strength of 70 ksi (483 MPa). The shaft finish is either plain steel or hot-dip galvanized in accordance with ASTM A123.

3.3.2 Shaft Coupling:

3.3.2.1 Pipe Sleeves: The sleeves are carbon steel round structural tubing that conforms to ASTM A513, Type 5, Drawn Over a Mandrel (DOM), Grade 1026, having a minimum yield strength of 70 ksi (483 MPa) and a minimum tensile strength of 80 ksi (552 MPa). The sleeve finish is either plain steel or hot-dip galvanized in accordance with ASTM A123.

3.3.2.2 Bolts and Nuts: The steel coupling bolts are $^3/_4$–10 UNC 2A standard hex bolts conforming to SAE J429, Grade 8, having a minimum yield strength of 130 ksi (896 MPa) and a minimum tensile strength of 150 ksi (1034 MPa). The matching steel nuts are $^3/_4$–10 UNC 2B standard hex jam nuts, conforming to SAE J995, Grade 5. The bolts and nuts are zinc-coated in accordance with ASTM B633, with coating classification Fe/Zn 8.

3.3.3 Helix Plates: The steel plates conform to ASTM A572, Grade 50, having a minimum yield strength of 50 ksi (345 MPa) and a minimum tensile strength of 65 ksi (448 MPa). The helix finish is the same as that of the shaft to which the helix is factory-welded.

3.3.4 Retrofit Bracket Assemblies FS288B and FS288BL:

3.3.4.1 FS288B and FS288BL Brackets: The steel plates used in the brackets conform to ASTM A36, having a minimum yield strength of 36 ksi (248 MPa) and a minimum tensile strength of 58 ksi (400 MPa). The bracket finish is either plain steel or hot-dip galvanized in accordance with ASTM A123.

3.3.4.2 FS288ES30 and FS288ES48 Sleeves: The carbon steel structural round tubing, used for the 30-inch- and 48-inch-long (762 mm and 1219 mm) sleeves, conforms to ASTM A500, Grade B or C, having a minimum yield strength of 50 ksi (345 MPa) and a minimum tensile strength of 62 ksi (427 MPa). The $^3/_4$-inch-long (19.1 mm) steel ring (collar) conforms to ASTM A53, Types E and S, Grade B, having a minimum yield strength of 35 ksi (241 MPa) and a minimum tensile strength of 60 ksi (413 MPa). The sleeve finish is either plain steel or hot-dip galvanized in accordance with ASTM A123.

3.3.4.3 FS288C Cap Plate Assembly: The $^1/_2$-inch-long (12.7 mm) steel pipe conforms to ASTM A53, Types E and S, Grade B, having a minimum yield strength of 35 ksi (241 MPa) and a minimum tensile strength of 60 ksi (413 MPa). The steel cap plate conforms to ASTM A572, Grade 50, having a minimum yield strength of 50 ksi (345 MPa) and a minimum tensile strength of 65 ksi (448 MPa). The cap plate assembly finish is either plain steel or hot-dip galvanized in accordance with ASTM A123.

3.3.4.4 Threaded Rods and Nuts: The $^3/_4$-inch-diameter steel threaded rods conform to ASTM A193, Grade B7, having a minimum yield strength of 105 ksi (724 MPa) and a minimum tensile strength of 125 ksi (862 MPa). The matching $^3/_4$-inch-diameter steel heavy hex nuts conform to ASTM A563 Grade DH or DH3, or ASTM A194 Grade 2H. The threaded rods and nuts are zinc-coated in accordance with ASTM B633, with coating classification Fe/Zn 8.

3.3.5 New Construction Brackets HP288NCB and HP288NCB8:

3.3.5.1 Plates: The steel plates conform to ASTM A36, having a minimum yield strength of 36 ksi (248 MPa) and a minimum tensile strength of 58 ksi (400 MPa). The plate finish is either plain steel or hot-dip galvanized in accordance with ASTM A123.

3.3.5.2 Pipe Sleeves: The pipe sleeves are steel round structural tubes that conform to ASTM A513, Type 5, Drawn Over a Mandrel (DOM), Grade 1026, having a minimum yield strength of 70 ksi (483 MPa) and a minimum tensile strength of 80 ksi (552 MPa). The sleeve finish is either plain steel or hot-dip galvanized in accordance with ASTM A123.

3.3.5.3 Bolts and Nuts: The steel bolts and nuts are those described in Section 3.3.2.2.

4.0 DESIGN AND INSTALLATION

4.1 Design:

4.1.1 General: Structural calculations (analysis and design) and drawings, prepared by a registered design professional, must be approved by the code official for each project, and must be based on accepted engineering principles as described in IBC Section 1604.4, and must conform to Section 1810 of the 2012 and 2009 IBC (Section 1808 of the 2006 IBC). The design method for the steel components is Allowable Strength Design (ASD), described in IBC Section 1602 and AISC 360 Section B3.4. The structural analysis must consider all applicable internal forces due to applied loads, structural eccentricity, and maximum spans between helical foundations. The result of this analysis, and the structural capacities, shall be used to select a helical foundation system.

The ASD capacities of FSI helical foundation system components are indicated in Tables 1, 2, 3, and 5. The geotechnical analysis must address the suitability of the helical foundation system for the specific project. It must also address the center-to-center spacing of the helical piles, considering both effects on the supported foundation and structure and group effects on the pile-soil capacity. The analysis must include estimates of the axial tension and/or compression capacities of the helical piles, whatever is relevant for the project, and the expected total and differential foundation movements due to single pile or pile group, as applicable.

A written report of the geotechnical investigation must be submitted to the code official as one of the required submittal documents, prescribed in Section 107 of the 2012 and 2009 IBC (Section 106 of the 2006 IBC), at the time of the permit application. The geotechnical report must include, but need not be limited to, the following information:

1. A plot showing the location of the soil investigation.
2. A complete record of the soil boring and penetration test logs and soil samples.
3. A record of soil profile.
4. Information on groundwater table, frost depth and corrosion-related parameters, as described in Section 5.5 of this report.
5. Soil properties, including those affecting the design such as support conditions for the piles.
6. Recommendations for design criteria, including but not limited to mitigations of effects of differential settlement and varying soil strength, and effects of adjacent loads.
7. Field inspection and reporting procedures (to include procedures for verification of the installed bearing capacity when required).
8. Load test requirements.
9. Any questionable soil characteristics and special design provisions, as necessary.

4.1.2 Bracket Capacity (P1): Only the localized limit state of concrete bearing strength in compression has been evaluated for this evaluation report. All other limit states related to the concrete foundation, such as those limit states described in ACI 318 Appendix D, punching (two-way) shear, beam (one-way) shear, and flexural (bending) related limit states, have not been evaluated for this evaluation report. The concrete foundation must be designed and justified to the satisfaction of the code official with due consideration to all applicable limit states, and the direction and eccentricity of applied loads, including reactions provided by the brackets acting on the concrete foundation. (See Tables 1, 2 and 3.)

4.1.3 Shaft Capacity (P2): The tops of shafts must be braced as prescribed in Section 1810.2.2 of the 2012 and 2009 IBC (Section 1808.2.5 of the 2006 IBC). In accordance with Section 1810.2.1 of the 2012 and 2009 IBC (Section 1808.2.9 of the 2006 IBC), any soil other than fluid soil must be deemed to afford sufficient lateral support to prevent buckling of systems that are braced. When piles are standing in air, water or fluid soils, the unbraced length is defined as the length of pile that is standing in air, water or fluid soils plus an additional 5 feet (1524 mm) when embedded into firm soil, or an additional 10 feet (3048 mm) when embedded into soft soil. Firm soils are defined as any soil with a Standard Penetration Test (SPT) blow count of five or greater. Soft soil is defined as any soil with an SPT blow count greater than zero and less than five. Fluid soil is defined as any soil with an SPT blow count of zero [weight of hammer (WOH) or weight of rods (WOR)]. The SPT blow counts must be determined in accordance with ASTM D1586. For fully braced conditions where the pile is installed in accordance with Section 1810.2.2 of the 2012 and 2009 IBC (Section 1808.2.5 of the 2006 IBC) and piles do not stand in air, water, or fluid soils, the allowable shaft capacities must not exceed the maximum design loads shown in Tables 1, 2 and 5. Shaft capacities of helical foundation systems in air, water or fluid soils must be determined by a registered design professional. The ASD shaft tension capacities are shown in Tables 3 and 5, the ASD shaft compression capacities are shown in Tables 1, 2 and 5, and the shaft torsional rating is shown in Table 5.

The elastic shortening/lengthening of the pile shaft will be controlled by the applied loads and the mechanical and geometrical properties of the $2^7/_8$-inch-diameter (73 mm) round structural tubing and the shaft coupling. The shaft elastic shortening or lengthening can be determined from the equation:

$$\Delta_{shaft} = \frac{P \times L}{A \times E} \qquad \text{(Eq. 1)}$$

where:

Δ_{shaft} = change in shaft length due to elastic shortening or lengthening (inches)

P = applied axial compression or tension load (lbf)

L = pile shaft length (inches)

A = shaft cross-sectional area (in^2) (see Table 4)

E = shaft steel modulus of elasticity (psi) (see Table 4)

4.1.4 Helix Plate Capacity (P3): The allowable axial compression and tension load capacities (P3) for each individual helical plate diameter (8, 10, 12 or 14 inches) is 55 kips (244.6 kN). (See Tables 1, 2, 3 and 5.) For helical piles with more than one helix, the allowable helix capacity (P3) for the helical foundation system may be taken as the sum of the allowable capacity of each individual helix.

4.1.5 Soil Capacity (P4): The allowable axial compressive or tensile soil capacity (P4) can be estimated by a registered design professional in accordance with a site-specific geotechnical report, as described in Section 4.1.1, combined with the individual helix bearing method (Method 1), or from field loading tests conducted under the supervision of a registered design professional (Method 2). For either Method 1 or Method 2, the predicted axial load capacities must be confirmed during the site-specific production installation, such that the axial load capacities predicted by the torque correlation method are equal to or greater than those predicted by Method 1 or 2, described above.

With the individual helix bearing method, the total nominal axial load capacity of the helical pile is determined as the sum of the individual areas of the helical bearing plates times the ultimate bearing capacities of the soil or rock comprising the respective bearing strata for the plates.

The design allowable axial load must be determined by dividing the total ultimate axial load capacity predicted by either Method 1 or 2, above, by a safety factor of at least 2.0.

With the torque correlation method, the total ultimate and allowable axial load capacities are predicted as follows:

$Q_{ult} = K_t T$ (Eq. 2)

$Q_{all} = 0.5 Q_{ult}$ (Eq. 3)

Where:

Q_{ult} = Ultimate axial tensile or compressive capacity (lbf or N) of the helical piles. For axial tension, pile ultimate axial load capacity must be limited to 55.1 kips (245.0 kN).

Q_{all} = Allowable axial tensile or compressive capacity (P4) (lbf or N) of the helical piles. For axial tension, pile allowable axial load capacity must be limited to 27.6 kips (122.5 kN).

K_t = Torque correlation factor. (See Table 5.)

T = Final installation torque, which is the final torque recorded at the termination (final) depth of the installed pile during the field installations (lbf-ft or N-m).

4.1.6 Foundation System: The ASD allowable capacity of the FSI helical foundation system in tension and compression depends upon the analysis of interaction of brackets, shafts, helical plates and soils; must be the lowest value of P1, P2, P3 and P4; and must be no larger than 60 kips (266.9 kN).

4.1.6.1 Foundation System (2012 and 2009 IBC): Under the 2012 and 2009 IBC, the additional requirements described in this section (Section 4.1.6.1) must be satisfied. For all design methods permitted under Section 4.1.1 of this report, the allowable axial compressive and tensile load of the helical pile system must be based on the least of the following conditions in accordance with 2012 and 2009 IBC Section 1810.3.3.1.9:

- Allowable load predicted by the individual helix bearing method (or Method 1) described in Section 4.1.5 of this report.
- Allowable load predicted by the torque correlation method described in Section 4.1.5 of this report.
- Allowable load predicted by dividing the ultimate capacity determined from load tests (Method 2 described in Section 4.1.5) by a safety factor of at least 2.0. This allowable load will be determined by a registered design professional for each site-specific condition.
- Allowable capacities of the shaft and shaft couplings. See Section 4.1.3 of this report.
- Sum of the allowable axial capacity of helical bearing plates affixed to the pile shaft. See Section 4.1.4 of this report.
- Allowable axial load capacity of the bracket. See Section 4.1.2 of this report.

4.2 Installation:

4.2.1 General: The FSI helical foundation systems must be installed by FSI trained and certified installers. The FSI helical foundation systems must be installed in accordance with Section 4.2, 2012 and 2009 IBC Section 1810.4.11, site-specific approved construction documents (engineering drawings and specifications), and the manufacturer's written installation instructions. In case of conflict, the most stringent requirement governs.

4.2.2 Helical Pile Installation: The helical piles are typically installed using hydraulic rotary motors having forward and reverse capabilities. The foundation piles must be aligned both vertically and horizontally as specified in the approved plans. The helical piles must be installed in a continuous manner with the pile advancing at a rate equal to at least 85 percent of the helix pitch per revolution at the time of final torque measurement. Installation speeds must be limited to less than 25 revolutions per minute (rpm). The lead and extension sections must be attached to the drive head with a product adaptor supplied by FSI. Torque readings must be taken at minimum intervals corresponding to each lead or extension section length and at final termination depth. The lead and extension sections are connected with the coupling bolts and nuts described in Section 3.2.1, and tightened to a snug-tight condition as defined in Section J3 of AISC 360. The final installation torque must equal or exceed that as specified by the torque correlation method, to support the allowable design loads of the structure using a torque correlation factor (K_t) of 9 ft^{-1} (29.5 m^{-1}). The installation torque must not exceed 7,898 ft-lbs (10 708 N-m). See Section 5.0 for further installation conditions of use.

4.2.3 Retrofit Bracket Installation:

1. An area must be excavated to expose the footing with an excavation approximately 3 feet (914 mm) square and with a depth of about 13 inches (330 mm) below the bottom of the footing. The soil is removed below the bottom of the footing to about 9 inches (229 mm) from the footing face in the area where the bracket bearing plate will be placed. The vertical and bottom faces of the footing must, to the extent possible, be smooth and at right angles to each other for the mounting of the support bracket.
2. Notching of footings may be needed to place the retrofit bracket directly under the wall/column. Notching must be performed, however, only with the acceptance of the registered design professional and the approval of the code official.
3. The bearing surfaces of the concrete (bottom and side of footing) must be prepared so that they are smooth and free of all soil, debris and loose concrete so as to provide a full and firm contact of the retrofit bracket plates.
4. The edge of the lead section shaft must be located about $1^1/_2$ inches (38 mm) from the bottom edge of the footing with a required angle of inclination of 3.0 ± 1.0 degrees from the vertical. Installation must be as described in Section 4.2.2.
5. When the final bearing depth is reached, the pile shafts are cut to approximately 13 inches (330 mm) above the bottom of footing.
6. The external sleeve must be placed through the bracket body and over the shaft. Once under the footing, the bracket must be rotated 180 degrees toward the footing. The bracket must be raised up to the footing and held in place while the thread rods and cap plate are attached.
7. The cap plate and all thread rods and tightening nuts must be installed to snug the bracket to the bottom of the footing.
8. Soil must be placed and compacted adequately up to the bottom of the bracket prior to structural lift or load transfer.
9. A lift cylinder can be used to lift the structure to desired elevation and to transfer the designated portion of the foundation load to the helical pile system.

10. Lifting of the existing foundation structure must be verified by the registered design professional and is subject to approval of the code official to ensure that the foundation and superstructure are not overstressed.
11. Field installation logs must be completed and excavation pits or trenches must be backfilled and compacted. Proper compaction procedures must comply with the approved construction documents for any site-specific requirement. When possible or as required by the approved construction document, grades or other means must be constructed to allow proper, positive surface drainage away from the structure.

4.2.4 New Construction Bracket Installation:

1. The helical pile must be installed in accordance with Section 4.2.2 with an allowable angular tolerance of ± 1 degree from the vertical.
2. The top of pile elevation must be established and must be consistent with the specified elevation. If necessary, the pile can be cut off in accordance with the manufacturer's instructions at the required elevation.
3. The new construction bracket must be placed over the top of the pile, with the bracket cap plate in full, direct contact (bearing) with the top of the pile shaft.
4. If the pile is used to resist tension forces, the new construction bracket must be embedded with proper distance into the footing or grade beam as required to resist the tension loads as determined by a registered design professional, and must be through-bolted to the helical pile shaft with two bolts and matching nuts as specified in Sections 3.2.2.2 and 3.3.5.3, and installed to a snug-tight condition in accordance with Section 4.2.2. Refer to Tables 2 and 3 for the proper embedded edge distance requirements for the shaft and bracket.

4.3 Special Inspection:

Continuous special inspection in accordance with Section 1705.9 of the 2012 IBC (Section 1704.10 of the 2009 IBC, and Section 1704.9 of the 2006 IBC) must be provided for the installation of foundation piles and foundation brackets. Where on-site welding is required, special inspection in accordance with Section 1705.2 of the 2012 IBC (Section 1704.3 of the 2009 and 2006 IBC) is also required. Items to be confirmed by the special inspector include, but are not limited to, the manufacturer's certification of installers, verification of the product manufacturer, helical pile and bracket configuration and identification, inclination and position of the helical pies, the installation torque and depth of the foundation piles, compliance of the installation with the approved construction documents and this evaluation report.

5.0 CONDITIONS OF USE

The Foundation Supportworks, Inc. (FSI), Model HP288 Helical Foundation Systems described in this report comply with the 2012 and 2009 IBC, and are suitable alternatives to what is specified in the 2006 IBC, subject to the following conditions:

5.1 The FSI helical foundation systems are manufactured, identified and installed in accordance with this report, approved construction documents (engineering drawings and specifications), and the manufacturer's written installation instructions. In case of conflict, the most stringent requirement governs.

5.2 The FSI helical foundation systems have been evaluated for support of structures assigned to Seismic Design Categories A, B and C in accordance with IBC Section 1613. Helical foundation systems that support structures assigned to Seismic Design Category D, E or F, or that are located in Site Class E or F, are outside the scope of this report, and are subject to the approval of the code official, based upon submission of an engineering design in accordance with the code by a registered design professional.

5.3 Installations of the helical foundation systems are limited to regions of concrete members where analysis indicates no cracking occurs at service load levels.

5.4 Retrofit and new construction brackets must be used only to support structures that are laterally braced as defined in Section 1810.2.2 of the 2012 and 2009 IBC (Section 1808.2.5 of the 2006 IBC).

5.5 The helical foundation systems must not be used in soil conditions that are indicative of a potential pile deterioration or corrosion situation as defined by the following: (1) soil resistivity of less than 1,000 ohm-cm; (2) soil pH of less than 5.5; (3) soils with high organic content; (4) soil sulfate concentrations greater than 1,000 ppm; (5) soils located in a landfill; or (6) soil containing mine waste.

5.6 Zinc-coated steel and bare steel components must not be combined in the same system. All helical foundation components must be galvanically isolated from concrete reinforcing steel, building structural steel, or any other metal building components.

5.7 The new construction helical piles (piles with new construction brackets) must be installed vertically plumb into the ground with a maximum allowable angle of inclination tolerance of 0° ± 1°. To comply with requirements found in Section 1810.3.1.3 of the 2012 and 2009 IBC (Section 1808.2.8 of the 2006 IBC), the superstructure must be designed to resist the effects of helical pile mislocation.

5.8 The retrofit helical piles must be installed at a maximum angle of inclination of 3.0 ± 1.0 degrees from the vertical.

5.9 Special inspection is provided in accordance with Section 4.3 of this report.

5.10 Engineering calculations and drawings, in accordance with recognized engineering principles as described in IBC Section 1604.4, and complying with Section 4.1 of this report and prepared by a registered design professional, are provided to, and approved by, the code official.

5.11 The adequacy of the concrete structures that are connected to the FSI brackets must be verified by a registered design professional, in accordance with applicable code provisions, such as Chapter 15 of ACI 318 and Chapter 18 of IBC. The adequacy is subject to the approval of the code official.

5.12 A geotechnical investigation report for each project site must be provided to the code official for approval in accordance with Section 4.1.1 of this report.

5.13 When using the alternative basic load combinations prescribed in Section 1605.3.2, the allowable stress increases permitted by material chapters of the IBC (including Chapter 18) or the referenced standards are prohibited.

5.14 The minimum helical pile center-to-center spacing must be three times the largest helical bearing plate diameters. For piles with closer spacing, the pile allowable load reductions due to pile group effects must be included in the geotechnical report described in Section 4.1.1 of this report, and must be considered in the pile design by a registered design professional. The spacing and load reductions, if applicable, are subject to the approval of the code official.

5.15 For piles supporting tension loads, the piles must be installed such that the minimum depth from the ground surface to the uppermost helix is 12D, where D is the diameter of the largest helix. In cases where the installation depth is less than 12D, the minimum embedment depth must be determined by a registered design professional based on site-specific soil conditions, and the determination is subject to the approval of the code official. For tension applications where the helical pile is installed at an embedment depth of less than 12D, the torque-correlation soil capacity, P4, is outside of the scope of this evaluation report.

5.16 Piles supporting compression loads must be installed such that the minimum depth from the bottom of the pile-supported footing to the uppermost helix is no less than 5 feet (1524 mm). For compression piles with a shallower helix depth, the actual helix depth must be considered in the pile design by a registered design professional. The depth is subject to approval of the code official.

5.17 Evaluation of compliance with Section 1810.3.11.1 of the 2012 and 2009 IBC (Section 1808.2.23.1.1 of the 2006 IBC) for buildings assigned to Seismic Design Category (SDC) C, and with Section 1810.3.6 of the 2012 and 2009 IBC (Section 1808.2.7 of the 2006 IBC) for all buildings, is outside the scope of this evaluation report. Such compliance must be addressed by a registered design professional for each site, and the work of the design professional is subject to approval of the code official.

5.18 Requirements listed in the footnotes to Tables 1, 2, 3, and 5 must be satisfied.

5.19 Settlement of helical piles is beyond the scope of this evaluation report, and must be determined by a registered design professional as required in Section 1810.2.3 of the 2012 and 2009 IBC (Section 1808.2.12 of the 2006 IBC).

5.20 The FSI helical foundation systems are manufactured at the following facilities: Distefano Technology & Manufacturing Company, 3838 South 108th Street, Omaha, Nebraska; Behlen Manufacturing Company, 4025 East 23rd Street, Columbus, Nebraska; and TSA Manufacturing, 14901 Chandler Road, Omaha, Nebraska. Manufacturing is done under a quality control program with inspections by ICC-ES.

6.0 EVIDENCE SUBMITTED

Data in accordance with the ICC-ES Acceptance Criteria for Helical Pile Systems and Devices (AC358), dated June 2013.

7.0 IDENTIFICATION

The FSI helical foundation system components described in this report are identified by labels that include the report holder's name (Foundation Supportworks, Inc.); the name and address of Distefano Technology & Manufacturing Company, Behlen Manufacturing Company, or TSA Manufacturing; the product name; the model number (HP288); the part number; the evaluation report number (ESR-3074).

TABLE 1—HP288 (WITH RETROFIT BRACKETS) ASD COMPRESSION CAPACITIES

Bracket Part No.[1]	Sleeve Part No.[1]	HP288 Bracket Description	Allowable Compression Capacity (kips)				
			Bracket (P1)[2]	Shaft (P2)[3]	Helix (P3)[4]	Soil (P4)[5]	Foundation System[6]
FS288B	FS288ES30	Standard Bracket w/30" Sleeve	24.9	60	55	35.5	24.9
FS288B-G	FS288ES30-G		27.9	60	55	35.5	27.9
FS288B	FS288ES48	Standard Bracket w/48" Sleeve	31.4	60	55	35.5	31.4
FS288B-G	FS288ES48-G		35.1	60	55	35.5	35.1
FS288BL	FS288ES30	Low Profile Bracket w/30" Sleeve	25.3	60	55	35.5	25.3
FS288BL-G	FS288ES30-G		28.2	60	55	35.5	28.2

For **SI:** I inch = 25.4 mm, 1 kip = 1000 lbf = 4.448 kN.
[1]Part numbers with "G" suffix indicate hot-dip galvanized coating. Part numbers without a "G" suffix indicate plain steel.
[2]Bracket capacity is based on full scale load tests per AC358 with an installed 5'-0" unbraced pile length per Section 1810.2.1 of the 2012 and 2009 IBC (Section 1808.2.9.2 of the 2006 IBC), having a maximum of one coupling.
[3]Shaft capacity is applicable only to the foundation systems that are fully braced as described in Section 4.1.3.
[4]Helix capacity is based on a single helix plate with outer diameter of 8, 10, 12 or 14 inches (203, 254, 305 or 356 mm).
[5]Soil capacity is based on torque correlation per Section 4.1.5 of this report, with piles installed at the maximum torsion rating.
[6]Foundation system allowable capacity is based on the lowest of P1, P2, P3 and P4 listed in this table. See Section 4.1.6 for additional requirements.

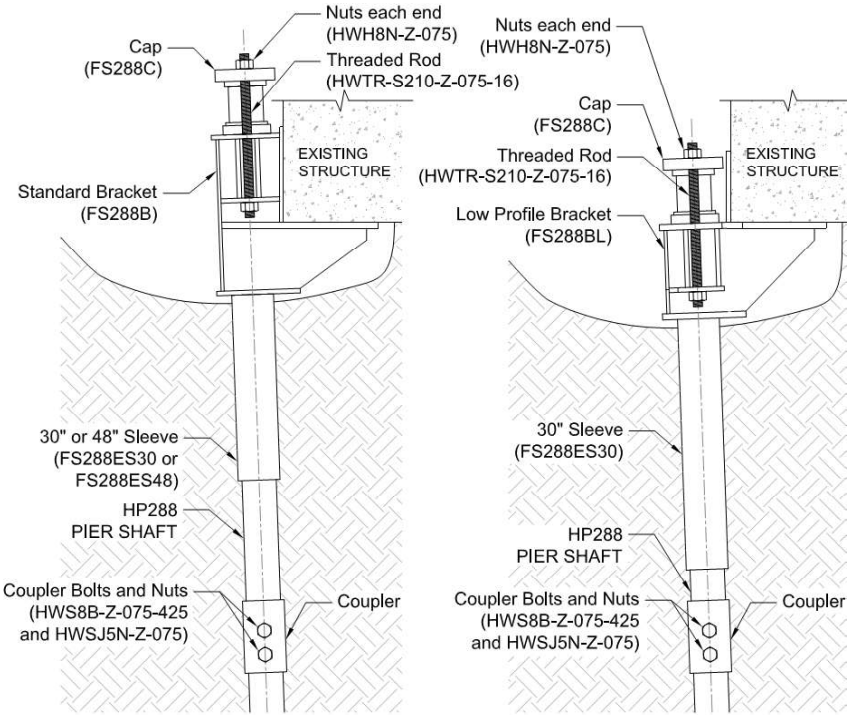

FIGURE 1—HP288 RETROFIT BRACKET AND SHAFT ASSEMBLIES

TABLE 2—HP288 (WITH NEW CONSTRUCTION BRACKETS) ASD COMPRESSION CAPACITIES[7]

Bracket Part No.[1]	Bearing Plate Dimensions (in)	Minimum Concrete Compressive Strength (psi)	Edge Distance "A" (in)	Allowable Compression Capacity (kips)				
				Bracket (P1)[2]	Shaft (P2)[3]	Helix (P3)[4]	Soil (P4)[5]	Foundation System[6]
HP288NCB or HP288NCB-G	6 x 6 x 0.75	2500	3	33.1	60	55	35.5	33.1
			≥ 4	44.1	60	55	35.5	35.5
		3000	≥ 3	39.7	60	55	35.5	35.5
HP288NCB8	8 x 8 x 0.75	2500	≥ 4	43.1	60	55	35.5	35.5
HP288NCB8-G	8 x 8 x 0.75	2500	≥ 4	46.5	60	55	35.5	35.5

For **SI:** I inch = 25.4 mm, 1 kip = 1000 lbf = 4.448 kN.
[1]Part numbers with "G" suffix indicate hot-dip galvanized coating. Part numbers without a "G" suffix indicate plain steel.
[2]Bracket capacity is based on localized limit state of concrete bearing only. All other limit states related to the concrete foundation, such as punching shear, have not been evaluated in this evaluation report.
[3]Shaft capacity is applicable only to the foundation systems that are fully braced as described in Section 4.1.3.
[4]Helix capacity is based on a single helix plate with outer diameter of 8, 10, 12 or 14 inches (203, 254, 305 or 356 mm).
[5]Soil capacity is based on torque correlation per Section 4.1.5 of this report, with piles installed at the maximum torsion rating.
[6]Foundation system allowable capacity is based on the lowest of P1, P2, P3 and P4 listed in this table. See Section 4.1.6 for additional requirements.
[7]Reduction of plain concrete [minimum of 24 MPa is required under ADIBC Appendix L, Section 5.1.1] thickness described in Section 22.4.7 of ACI 318-11 for the 2012 IBC (Section 22.4.7 of ACI 318-08 for the 2009 IBC, and 22.4.8 of ACI 318-05 for the 2006 IBC) is assumed not applicable.

TABLE 3—HP288 (WITH NEW CONSTRUCTION BRACKETS) ASD TENSION CAPACITIES[6]

Bracket Part No.[1]	Bearing Plate Dimensions (in)	Minimum Concrete Compressive Strength (psi)	Edge Distance "A" (in)	Allowable Tension Capacity (kips)				
				Bracket (P1)[2,7]	Shaft (P2)	Helix (P3)[3]	Soil (P4)[4]	Foundation System[5]
HP288NCB or HP288NCB-G	6 x 6 x 0.75	2500	3	24.3	34.1	55	27.6	24.3
			≥ 4	32.4	34.1	55	27.6	27.6
		3000	≥ 3	29.1	34.1	55	27.6	27.6
		3500	≥ 3	34.0	34.1	55	27.6	27.6
HP288NCB8	8 x 8 x 0.75	2500	≥ 4	34.1	34.1	55	27.6	27.6
HP288NCB8-G	8 x 8 x 0.75	2500	≥ 4	38.2	38.2	55	27.6	27.6

For **SI:** I inch = 25.4 mm, 1 kip = 1000 lbf = 4.448 kN, 1 psi = 6.895 kPa.
[1]Part numbers with "G" suffix indicate hot-dip galvanized coating. Part numbers without a "G" suffix indicate plain steel.
[2]Bracket capacity is based on localized limit state of concrete bearing only. All other limit states related to the concrete foundation, such as punching shear, have not been evaluated in this evaluation report.
[3]Helix capacity is based on a single helix plate with outer diameter of 8, 10, 12 or 14 inches (203, 254, 305 or 356 mm).
[4]Soil capacity is based on torque correlation per Section 4.1.5 of this report, with piles installed at the maximum torsion rating.
[5]Foundation system allowable capacity is based on the lowest of P1, P2, P3 and P4 listed in this table. See Section 4.1.6 for additional requirements.
[6]Reduction of plain concrete [minimum of 24 MPa is required under ADIBC Appendix L, Section 5.1.1] thickness described in Section 22.4.7 of ACI 318-11 for the 2012 IBC (section 22.4.7 of ACI 318-08 for the 2009 IBC, and 22.4.8 of ACI 318-05 for the 2006 IBC) is assumed not applicable.
[7]Bolts must be installed in accordance with Sections 3.2.2.2 and 4.2.4 of this report.

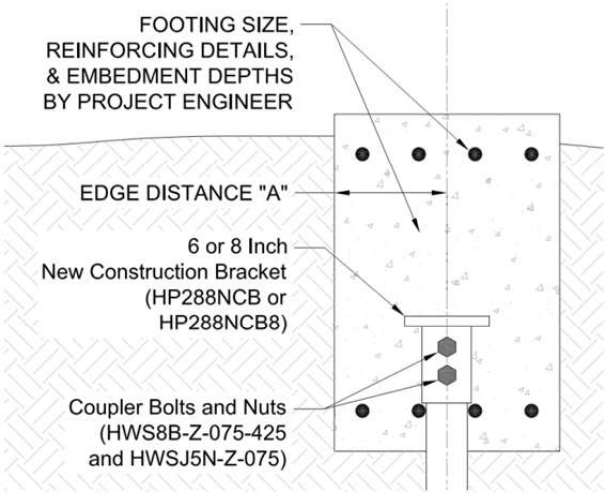

FIGURE 2—HP288 NEW CONSTRUCTION BRACKET ASSEMBLY

TABLE 4—MECHANICAL PROPERTIES OF 2.875-INCH DIAMETER HELICAL SHAFTS

Mechanical Properties	Un-corroded	After 50 Year Corrosion Loss	
	Plain Steel	Plain Steel	Hot-dip Galvanized Steel
Steel Minimum Yield Strength, Fy	60 ksi	60 ksi	60 ksi
Steel Minimum Ultimate Strength, Fu	70 ksi	70 ksi	70 ksi
Modulus of Elasticity, E	29,000 ksi	29,000 ksi	29,000 ksi
Nominal Wall Thickness	0.276 in.	0.276 in.	0.276 in.
Design Wall Thickness	0.257 in.	0.221 in.	0.247 in.
Outside Diameter, OD	2.875 in.	2.839 in.	2.865 in.
Inside Diameter, ID	2.361 in.	2.397 in.	2.371 in.
Cross Sectional Area, A	2.11 in^2	1.82 in^2	2.03 in^2
Moment of Inertia, I	1.83 in^4	1.57 in^4	1.76 in^4
Radius of Gyration, r	0.93 in.	0.93 in.	0.93 in.
Elastic Section Modulus, S	1.27 in^3	1.10 in^3	1.23 in^3
Plastic Section Modulus, Z	1.77 in^3	1.52 in^3	1.70 in^3

For **SI:** I inch = 25.4 mm, 1 ksi = 6.895 MPa, 1lbf-ft = 1.356 N-m, 1 lbf = 4.448 N.

TABLE 5—HP288 LEAD AND EXTENSION ASD TENSION AND COMPRESSION CAPACITIES[1,6]

Lead/Extension Part No.	Net Shaft Length "L" (in)	Helix Diameter (in)				(P2)[2] Shaft Comp. (kips)	(P2) Shaft Ten. (kips)	(P3)[3] Helix (kips)	K_t (ft^{-1})	Shaft Torsion Rating[4] (lbf-ft)	(P4)[5] Torque Correlated Soil Capacity (kips)	
		A	B	C	D						Com.	Ten.
HP288L5H8-3850	60	8	--	--	--	60	34.1	55	9	7898	35.5	27.6
HP288L5H0-3850	60	10	--	--	--	60	34.1	55	9	7898	35.5	27.6
HP288L5H2-3850	60	12	--	--	--	60	34.1	55	9	7898	35.5	27.6
HP288L5H4-3850	60	14	--	--		60	34.1	55	9	7898	35.5	27.6
HP288L5H80-3850	60	8	10	--	--	60	34.1	55	9	7898	35.5	27.6
HP288L5H02-3850	60	10	12	--	--	60	34.1	55	9	7898	35.5	27.6
HP288L5H24-3850	60	12	14	--		60	34.1	55	9	7898	35.5	27.6
HP288L7H8-3850	84	8	--	--	--	60	34.1	55	9	7898	35.5	27.6
HP288L7H0-3850	84	10	--	--	--	60	34.1	55	9	7898	35.5	27.6
HP288L7H2-3850	84	12	--	--	--	60	34.1	55	9	7898	35.5	27.6
HP288L7H4-3850	84	14	--	--		60	34.1	55	9	7898	35.5	27.6
HP288L7H80-3850	84	8	10	--	--	60	34.1	55	9	7898	35.5	27.6
HP288L7H02-3850	84	10	12	--	--	60	34.1	55	9	7898	35.5	27.6
HP288L7H24-3850	84	12	14	--	--	60	34.1	55	9	7898	35.5	27.6
HP288L7H802-3850	84	8	10	12	--	60	34.1	55	9	7898	35.5	27.6
HP288L7H024-3850	84	10	12	14	--	60	34.1	55	9	7898	35.5	27.6
HP288L0H80-3850	120	8	10	--	--	60	34.1	55	9	7898	35.5	27.6
HP288L0H02-3850	120	10	12	--	--	60	34.1	55	9	7898	35.5	27.6
HP288L0H24-3850	120	12	14	--	--	60	34.1	55	9	7898	35.5	27.6
HP288L0H802-3850	120	8	10	12	--	60	34.1	55	9	7898	35.5	27.6
HP288L0H024-3850	120	10	12	14	--	60	34.1	55	9	7898	35.5	27.6
HP288L0H8024-3850	120	8	10	12	14	60	34.1	55	9	7898	35.5	27.6
HP288E3H4-3850	30	14	--	--	--	60	34.1	55	9	7898	35.5	27.6
HP288E4H4-3850	42	14	--	--	--	60	34.1	55	9	7898	35.5	27.6
HP288E5H4-3850	54	14	--	--	--	60	34.1	55	9	7898	35.5	27.6
HP288E7H4-3850	78	14	--	--	--	60	34.1	55	9	7898	35.5	27.6
HP288E0H4-3850	114	14	--	--	--	60	34.1	55	9	7898	35.5	27.6
HP288E7H44-3850	78	14	14	--	--	60	34.1	55	9	7898	35.5	27.6
HP288E0H44-3850	114	14	14	--	--	60	34.1	55	9	7898	35.5	27.6
HP288E3	30	--	--	--	--	60	34.1	55	9	7898	35.5	27.6
HP288E5	54	--	--	--	--	60	34.1	55	9	7898	35.5	27.6
HP288E7	78	--	--	--	--	60	34.1	55	9	7898	35.5	27.6
HP288E0	114	--	--	--	--	60	34.1	55	9	7898	35.5	27.6

For **SI:** I inch = 25.4 mm, 1 kip = 1000 lbf = 4.448 kN, 1lbf-ft = 1.356 N-m.

[1]Part numbers with "G" suffix indicate hot-dip galvanized coating. Part numbers without a "G" suffix indicate plain steel.
[2]Shaft compression capacity (P2) is based on that the foundation system is fully braced as described in Section 4.1.3.
[3]Helix capacity (P3) is applicable to both tension and compression loading and is based on a single helix plate with outer diameter of 8, 10, 12 or 14 inches (203, 254, 305 or 356 mm).
[4]Shaft torsion rating is the maximum torsion that can be applied to the shaft during the helical pile installation.
[5]Torque correlated soil capacity (P4) is applicable to both tension and compression loading and is based on torque correlation per Section 4.1.5, with piles installed at the maximum torsion rating.
[6]For piles with extension(s), shaft coupling(s) must be installed in accordance with Sections 3.2.1 and 4.2.2 of this report.

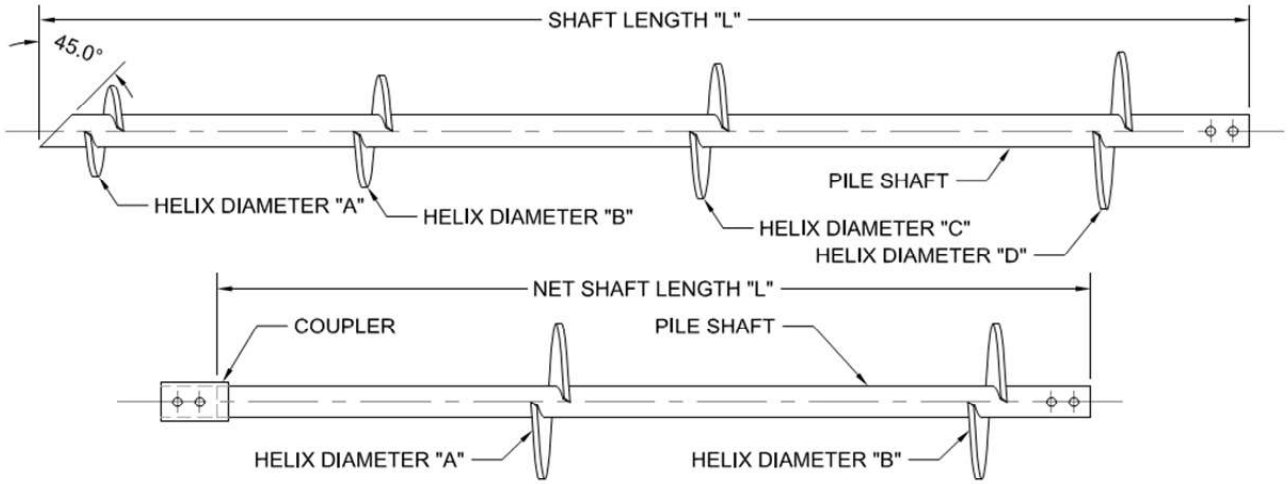

FIGURE 3—TYPICAL HP288 SHAFT LEAD AND EXTENSION SECTIONS AND HELIX PLATES

ICC EVALUATION SERVICE
Most Widely Accepted and Trusted

ICC-ES Evaluation Report

ESR-3074 FBC Supplement

Reissued July 2015

This report is subject to renewal July 2017.

www.icc-es.org | (800) 423-6587 | (562) 699-0543 *A Subsidiary of the International Code Council®*

DIVISION: 31 00 00—EARTHWORK
Section: 31 63 00—Bored Piles

REPORT HOLDER:

FOUNDATION SUPPORTWORKS, INC.
12330 CARY CIRCLE
OMAHA, NEBRASKA 68128
(800) 281-5845
www.foundationsupportworks.com
jeff.kortan@foundationsupportworks.com

EVALUATION SUBJECT:

FOUNDATION SUPPORTWORKS HELICAL FOUNDATION SYSTEMS

1.0 REPORT PURPOSE AND SCOPE

Purpose:

The purpose of this evaluation report supplement is to indicate that the Foundation Supportworks, Inc. (FSI), Model HP288 Helical Foundation Systems, recognized in ICC-ES master report ESR-3074, have also been evaluated for compliance with the codes noted below.

Applicable code editions:

- 2010 *Florida Building Code—Building*
- 2010 *Florida Building Code—Residential*

2.0 CONCLUSIONS

The Foundation Supportworks, Inc. (FSI), Model HP288 Helical Foundation Systems, described in Sections 2.0 through 7.0 of the master evaluation report ESR-3074, comply with the 2010 *Florida Building Code—Building* and the 2010 *Florida Building Code—Residential*, provided the design and installation are in accordance with the *International Building Code®* provisions noted in the master report and the following conditions apply:

1. Design wind loads must be based on Section 1609 of the 2010 *Florida Building Code—Building* or Section 301.2.1.1 of the 2010 *Florida Building Code—Residential*, as applicable.
2. Load combinations must be in accordance with Section 1605.2 or Section 1605.3 of the 2010 *Florida Building Code—Building*, as applicable.

Use of the Foundation Supportworks Inc. (FSI) Model HP288 Helical Foundation Systems for compliance with the High-Velocity Hurricane Zone provisions of the 2010 *Florida Building Code—Building* and the 2010 *Florida Building Code—Residential* has not been evaluated, and is outside the scope of this evaluation report.

For products falling under Florida Rule 9N-3, verification that the report holder's quality assurance program is audited by a quality assurance entity approved by the Florida Building Commission for the type of inspections being conducted is the responsibility of an approved validation entity (or the code official when the report holder does not possess an approval by the Commission).

This supplement expires concurrently with the master report, reissued July 2015.

ICC-ES Evaluation Reports are not to be construed as representing aesthetics or any other attributes not specifically addressed, nor are they to be construed as an endorsement of the subject of the report or a recommendation for its use. There is no warranty by ICC Evaluation Service, LLC, express or implied, as to any finding or other matter in this report, or as to any product covered by the report.

Copyright © 2015

MAG BUILDING CODES COMMITTEE MEMBERSHIP AS OF 2/10/2016

Voting Members

Name	Representing	Telephone #	Fax #	E-mail Address
Larry Taylor (Chair)	Gilbert	480-503-6958	480-497-4923	larry.taylor@gilbertaz.gov
Gregory Arrington (Vice Chair)	Youngtown	623-933-8286	623-933-5951	garrington@youngtownaz.org
Dave Zellner	Apache Junction	480-474-5084	480-982-7010	dzellnern@ajcity.net
Brett Harris	Avondale	623-333-4027	623-333-0400	bharris@avondale.org
Phil Marcotte	Buckeye	623-349-6200	623-349-6221	pmarcotte@buckeyeaz.gov
Mike Tibbett	Carefree	480-488-1471	480-488-3845	mike@carefree.org
Mike Baxley	Cave Creek	480-488-6637	480-488-2263	mbaxley@cavecreek.org
Ron Boose	Chandler	480-782-3018	480-782-3110	ron.boose@chandleraz.gov
Mary Dickson	El Mirage	623-876-2932	623-876-4607	mdickson@cityofelmirage.org
Jason Penrod	Florence	520-868-7615	520-868-7546	jason.penrod@florenceaz.gov
Jason Field	Fountain Hills	480-816-5127	480-837-3145	jfield@fh.az.gov
Tom Paradise	Glendale	623-930-3143	623-915-2695	tparadise@glendaleaz.com
Ed Kulik	Goodyear	623-882-7932	623-882-7114	ekulik@goodyearaz.gov
Chuck Ransom	Litchfield Park	623-935-1066	623-535-9754	cransom@litchfield-park.org
NO CURRENT APPOINTMENT	Maricopa			
Tom Ewers	Maricopa County	602-506-7145	602-506-3282	tomewers@mail.maricopa.gov
Steven Hether	Mesa	480-644-2039	480-644-4900	steve.hether@mesaaz.gov
Bob Lee	Paradise Valley	480-348-3631	480-951-3751	rlee@paradisevalleyaz.gov
Dennis Chase	Peoria	623-773-8420	623-773-7233	dennis.chase@peoriaaz.gov
Michael Abegg	Phoenix	602-534-6498		michael.abegg@phoenix.gov
Michael Williams	Queen Creek	480-358-3009	480-358-3001	michael.williams@queencreek.org
Michael Clack	Scottsdale	480-312-7629	480-312-9029	mclack@scottsdaleaz.gov
Brigham Bennett	Surprise	623-222-3056	623-222-3002	brigham.bennett@surpriseaz.gov
Martin Perez	Tempe	480-350-8670	480-350-8677	martin_perez@tempe.gov
Dale Crandell	Tolleson	623-936-7111	623-936-7117	dcrandell@tollesonaz.org
Kevin Bruce	Wickenburg	928-684-5451 x513	602-506-1580	kbruce@wickenburgaz.org

Non-Voting Members

Name	Representing	Telephone #	Fax #	E-mail Address
Jackson Moll	Home Builders Assn.	602-274-6545	480-556-5478	mollj@hbaca.org
Sharon Bonesteel	Salt River Project	602-236-4498	602-236-2791	sharon.bonesteel@srpnet.com
Jim Ricker	Town of Guadalupe	480-505-5380	480-730-3097	jim@guadalupeaz.org
Alfonso Rodriguez	Fort McDowell Yavapai Nation	480-789-7740	480-789-7798	arodriguez@ftmcdowell.org
Michael McMillan	Brown and Associates	480-991-3751	480-596-5065	mac@brown-and-associates.net

Survey of Code Adoption

Jurisdiction	Building	Mechanical	Plumbing	Electric	Residential	Fire	Energy	Existing Building	Fuel Gas	Property Maintenance	Green Construction	Notes	URL	Effective Date	Anticipated Effective Date for 2012 or 2015 ICC Codes
Apache Junction	2006 IBC	2006 IMC	1994 UPC	2005 NEC	2006 IRC	2006 IFC							Apache Junction		
Avondale	2012 IBC	2012 IMC	2012 IPC	2011 NEC	2012 IRC	2003 IFC	2012 IECC		2012 IFGC				Avondale	7/3/2013	
Buckeye	2012 IBC	2012 IMC	2012 IPC	2011 NEC	2012 IRC	2012 IFC	2012 IECC	2012 IEBC	2012 IFGC	2006 IPMC		With city amendments.	Buckeye	1/17/2014	
Carefree	2003 IBC	2003 IMC	1994 UPC	2002 NEC	2003 IRC	2003 IFC							Carefree	7/1/2006	Not going to adopt, staying with 2003.
Cave Creek	2009 IBC	2009 IMC	2009 IPC	2008 NEC	2009 IRC	2009 IFC	2009 IECC	2009 IEBC	2009 IFGC				Cave Creek	1/1/2012	
Chandler	2012 IBC	2012 IMC	2012 IPC	2011 NEC	2012 IRC	2012 IFC	2012 IECC	2012 IEBC	2012 IFGC				Chandler	8/1/2013	
El Mirage	2012 IBC	2012 IMC	2012 IPC	2011 NEC	2012 IRC	2012 IFC	2012 IECC	2012 IEBC	2012 IFGC		2012 IGCC (optional)		El Mirage	7/1/2013	
Florence	2006 IBC	2006 IMC	2006 IPC	2005 NEC	2006 IRC	2006 IFC	2006 IECC		2006 IFGC	2006 IPMC		2003 Accessible & Usable Bldgs & Facilities Code	Florence		
Fountain Hills	2012 IBC	2012 IMC	2012 IPC	2011 NEC	2012 IRC	2012 IFC	2006 IECC		2012 IFGC			2012 Uniform Swimming Pool, Spa, and Hot Tub Code	Fountain Hills	11/21/2013	
Gila Bend	2006 IBC	2006 IMC	2006 IPC	2005 NEC	2006 IRC	2006 IFC							Gila Bend		
Gila River	2006 IBC	2006 IMC	2006 IPC	2005 NEC	2006 IRC	2003 IFC							Gila River		
Gilbert	2012 IBC	2012 IMC	2012 IPC	2011 NEC	2012 IRC	2012 IFC	2006 IECC		2012 IFGC		2012 IGCC (optional)	w/ 2012 IECC as voluntary	Gilbert	12/7/2013	
Glendale	2012 IBC	2012 IMC	2012 IPC 2012 UPC	2011 NEC	2012 IRC	2009 IFC	2012 IECC	2012 IEBC	2012 IFGC			With city amendments.	Glendale	12/1/2012	
Goodyear	2006 IBC	2006 IMC	1994 UPC	2005 NEC	2006 IRC	2006 IFC	2006 IECC						Goodyear		
Guadalupe	1997 UBC	1997 UMC	1994 UPC	1999 NEC	1997 UBC	1997 UFC							Guadalupe		
Litchfield Park	2006 IBC	2006 IMC	2006 IPC	2005 NEC	2006 IRC	2003 IFC	2006 IECC		2006 IFGC				Litchfield Park	7/1/2008	
Maricopa	2012 IBC	2012 IMC	2012 IPC	2011 NEC	2012 IRC	2012 IFC	2012 IECC		2012 IFGC	2012 IPMC			Maricopa	1/1/2013	
Maricopa County	2012 IBC	2012 IMC	2012 IPC	2011 NEC	2012 IRC		2012 IECC (optional)	2012 IEBC	2012 IFGC		2012 IGCC (optional)		Maricopa County	1/1/2014	
Mesa	2006 IBC	2006 IMC	2006 IPC	2005 NEC	2006 IRC	2006 IFC	2009 IECC	2006 IEBC	2006 IFGC				Mesa		
Paradise Valley	2012 IBC	2012 IMC	2012 IPC	2011 NEC	2012 IRC	2012 IFC	2012 IECC		2012 IFGC				Paradise Valley	1/1/2013	
Peoria	2012 IBC	2012 IMC	2012 IPC	2011 NEC	2012 IRC	2012 IFC	2012 IECC		2012 IFGC	2012 IPMC			Peoria	5/1/2013	
Phoenix	2012 IBC	2012 IMC	2012 IPC 2012 UPC	2011 NEC	2012 IRC	2012 IFC	2012 IECC	2012 IEBC	2012 IFGC		2012 IGCC		Phoenix	7/1/2013	
Queen Creek	2012 IBC	2012 IMC	2012 IPC	2011 NEC	2012 IRC	2012 IFC	2012 IECC	2012 IEBC	2012 IFGC				Queen Creek	1/1/2014	
Salt River	2003 IBC	2003 IMC	2003 UPC	2002 NEC	2003 IRC	2003 IFC							Salt River		
Scottsdale	2012 IBC	2012 IMC	2012 IPC	2011 NEC	2012 IRC	2012 IFC	2012 IECC	2012 IEBC	2012 IFGC	2012 IPMC	2012 IGCC		Scottsdale	1/7/2013	
Surprise	2012 IBC	2012 IMC	2012 IPC	2011 NEC	2012 IRC	2012 IFC	2012 IECC	2012 IEBC	2012 IFGC	2006 IPMC	2012 IGCC (optional)		Surprise	9/1/2014	
Tempe	2012 IBC	2012 IMC	2012 IPC	2011 NEC	2012 IRC	2012 IFC	2012 IECC	2012 IEBC	2012 IFGC				Tempe	7/1/2015	
Tolleson	2012 IBC	2012 IMC	2012 IPC	2011 NEC	2012 IRC	2012 IFC	2012 IECC	2012 IEBC	2012 IFGC	2012 IPMC			Tolleson	1/9/2015	
Wickenburg	2006 IBC	2006 IMC	2006 IPC	2005 NEC	2006 IRC	2003 IFC	2006 IECC	2006 IEBC	2006 IFGC				Wickenburg		No plans to adopt 2009 codes.
Youngtown	2012 IBC	2012 IMC	2012 IPC	2011 NEC	2012 IRC	2012 IFC		2012 IEBC	2012 IFGC	2012 IPMC			Youngtown	1/1/2014	Adopting 2015 codes effective July/August 2015

This is intended to be used as a guide for the selected codes, as to what member agencies have adopted or intend to adopt.
Last updated January 4, 2016 by Scott Wilken, MAG
Source: MAG Building Codes Committee Members