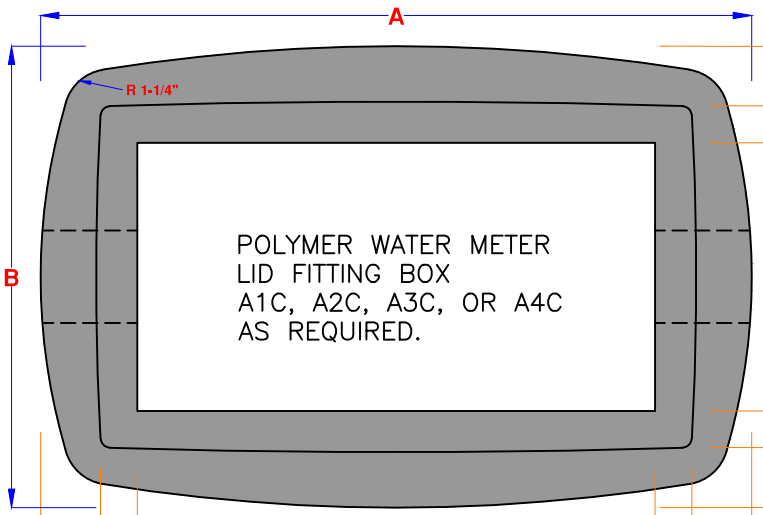

TOP VIEW

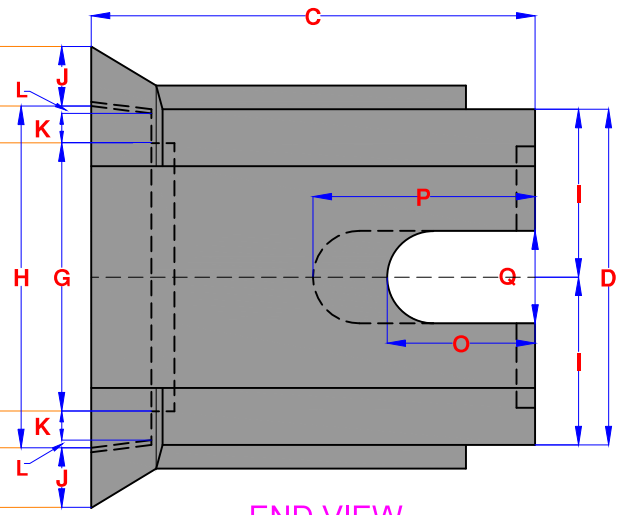

END VIEW

CUT OUT PIPE SLOTS IF NECESSARY TO SET BOX TO PROPER GRADE

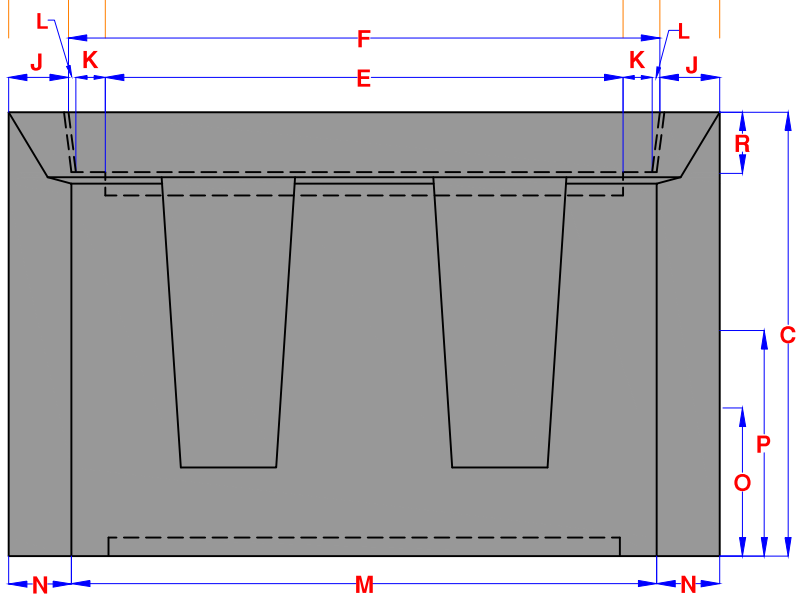

SIDE VIEW

NOTES:

1) THE METER BOXES SHALL CONFORM TO THE DIMENSIONS AS SHOWN AND SHALL BE MADE OF HDPE POLYMER.
2) MINIMUM $\frac{3}{8}$" WALL THICKNESS
3) THE METER BOXES SHALL BE GRAY THROUGHOUT USING POLYETHYLENE MATERIALS AND SHALL NOT HAVE FOAMING OR BLOWING AGENTS.
4) SHALL BE MADE IN THE U.S.A.

METER BOX DIMENSIONS				
DIMS	BOX NUMBER			
	A1C	A2C	A3C	A4C
A	19 1/4"	25 1/8"	29 9/16"	33 7/8"
B	12 1/2"	17 5/8"	18 13/16"	23 3/8"
C	12"	12"	12"	12"
D	9 1/16"	14 15/16"	15 13/16"	20 9/16"
E	14"	19 7/8"	23 1/2"	28 1/4"
F	16"	21 7/8"	26 5/16"	30 1/2"
G	7 1/4"	12 1/8"	12 5/8"	17 3/4"
H	9 1/4"	14 1/8"	15 5/16"	19 13/16"
I	4 1/2"	7 1/2"	7 7/8"	10 1/4"
J	1 5/8"	1 5/8"	1 11/16"	1 3/4"
K	13/16"	13/16"	15/16"	13/16"
L	3/16"	3/16"	3/8"	3/16"
M	15 13/16"	21 11/16"	25 13/16"	30 1/16"
N	1 11/16"	1 11/16"	1 7/8"	1 11/16"
O	4"	4"	4"	4"
P	6"	6"	6"	6"
Q	2 1/2"	2 1/2"	3 1/2"	3 1/2"
R	1 5/8"	1 5/8"	2 3/8'	1 5/8"
	$\frac{5}{8}$" OR $\frac{3}{4}$" METER	1" METER	1 $\frac{1}{2}$" METER	2" METER

DETAIL NO.				REVISED	DETAIL NO.
XXXX	MARICOPA ASSOCIATION of GOVERNMENTS	STANDARD DETAIL ENGLISH	POLYMER WATER METER BOXES	05-30-2013	XXXX