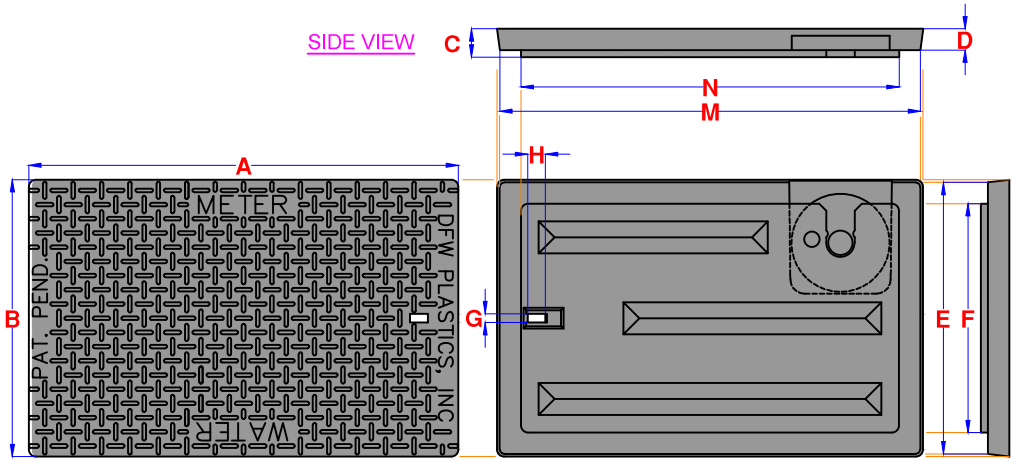

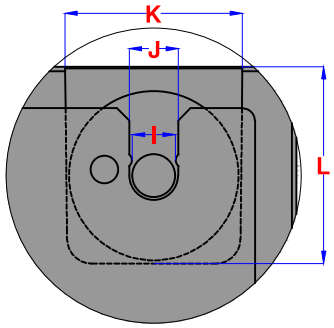

POLYMER LID DETAILS

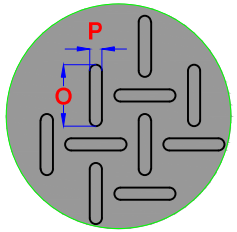

MOLDED SKID–RESISTANT TREAD PATTERN RAISED TO 0.150" HEIGHT.

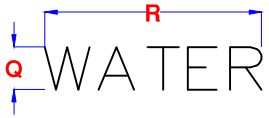

'WATER METER' FONT SHALL BE STANDARD FADAL CNC RAISED TO 0.150" HEIGHT.

SECURITY LOCK OPTION

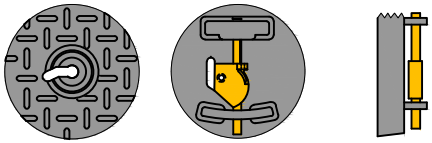

KEYHOLE FOR BRASS KEY — SECURITY BRASS LOCK — DFW-SBLOCK-XL

OPTIONAL SECURITY HARDWARE

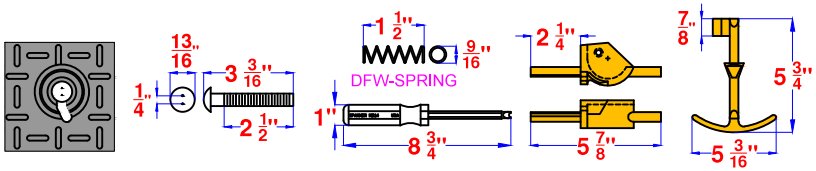

DFW-SBOLT INSTALLED — DFW-SBOLT — DFW-SDRIVER — DFW-SBLOCK-XL — DFW-KEY

STEEL OVERLAY LID OPTION

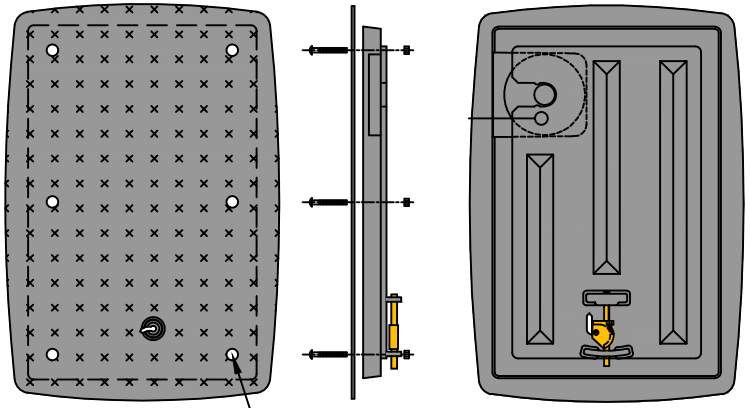

DFWAXC-4OVERLAY
1/4" FLOOR PLATE

STEEL OVERLAY ASSEMBLY

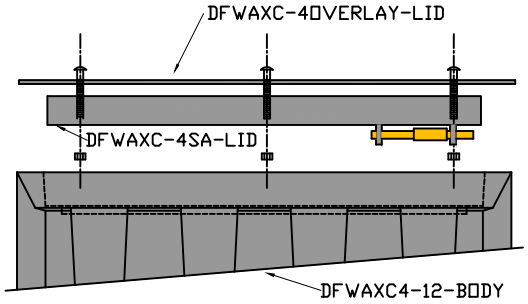

THE STEEL OVERLAY LID BOLTS DIRECTLY TO THE POLYMER LID AND EQUAL TO THE DIMENSIONS OF THE POLYMER BODY.

METER BOX LID DIMENSIONS				
DIMS	LID PART NUMBER			
	A1C	A2C	A3C	A4C
A	15 3/4"	21 5/8"	25 7/8"	30 1/8"
B	9"	13 7/8"	14 15/16"	19 1/4"
C	1 13/16"	1 13/16"	2 3/16"	2"
D	1 1/2"	1 1/2"	2 3/16"	1 1/2"
E	8 1/4"	13 1/8"	14 5/16"	18 7/8"
F	N/A	N/A	N/A	15 7/8"
G	9/16"	9/16"	9/16"	9/16"
H	1 1/8"	1 1/8"	1 1/8"	1 1/8"
I	1 4/5"	1 4/5"	1 4/5"	1 4/5"
J	2"	2"	2"	2"
K	7"	7"	7"	7"
L	8"	7 3/4"	8"	7 3/4"
M	15 3/8"	21 1/4"	25 1/4"	29 3/4"
N	N/A	N/A	N/A	26 3/4"
O	3/4"	3/4"	1 1/4"	1 1/4"
P	3/16"	3/16"	1/4"	1/4"
Q	1"	1"	1 1/4"	1 1/4"
R	4 3/4"	4 3/4"	6"	6"
	5/8" OR 3/4" METER	1" METER	1 1/2" METER	2" METER

DETAIL NO.		STANDARD DETAIL		REVISED	DETAIL NO.
XXXX	MARICOPA ASSOCIATION of GOVERNMENTS	ENGLISH	POLYMER WATER METER BOX LIDS	05-30-2013	XXXX