Maricopa Association of Governments

Building Code Amendments and Standards Manual

2013 Edition

DRAFT

Regional Council

Review Draft

June 19, 2013

Introduction

The MAG Building Code Amendments and Standards (BCAS) is the result of the work of the MAG Building Codes Committee, which made up of municipal and county building officials from the MAG region, as well as others representing organizations interested in local building codes.

The goal of the BCAS is to provide a set of documents that supplement the standard building codes in order to address building issues specific to the MAG region. These documents have been reviewed and vetted by the members of the Building Codes Committee with an interest in using the national building codes to address local conditions.

The goal of the BCAS is not to create a standard set of building codes to be used by all jurisdictions in the MAG region. Adoption and use of the BCAS and the documents within it are completely optional at the discretion of the local jurisdictions. Jurisdictions may adopt the BCAS in whole, or may adopt specific documents within the BCAS as they see fit. Jurisdictions may also adopt and amend documents within the BCAS if desired.

The BCAS is designed to allow jurisdictions to refer to specific document citations as part of their local amendments to their adopted building codes.

The MAG Building Codes Committee typically recommends that its members adopt the most current versions of the standard national building codes. As such, the code references in the BCAS will always strive to refer to the most current national building code set. Jurisdictions not using the most current set of national codes should note that specific code references may need to be adjusted to reflect the code being amended.

The BCAS will be reviewed and updated as needed, typically once per year.

DRAFT

2013 Building Code Amendments and Standards Manual

Table of Contents

BCAS #	Title	Pages
1	Sound Transmission Control near Luke Air Force Base	1-10
2	MAG Model Standard for Fireplaces, Wood Stoves, and Other Solid Fuel Burning Devices	11-12
3	Standards for Earthen Structures and Straw Bale Construction	13-43
4	Revision to International Residential Code Table R301.2(1)	44
5	Sample Agreement to Relocate a Gas Line without a Permit	45
6	Permit Submittal Requirements for Residential Solar Domestic Hot Water Systems	46
7	Uniform Application for Fireblocking per Section 302.11 of the 2012 International Residential Code	47-48
8	Recommendations from the Phoenix Residential Post-Tension Round Table Committee	49-51
9	Uniform Requirement of Pad Certification per Section R401.2 of the 2012 International Residential Code	52
10	Uniform Requirement of Weep Screed per Section R703.6.2.1 of the 2012 International Residential Code	53
11	Service Entry Section Installation Practices	54-55
12	Storage Space Lighting	56
13	City of Phoenix Approved Steel Fabricators Program	57
14	2007 Supplement to the International Residential Code	58-79
15	9.5 Course Wall Details for Wind Exposure B and C	80-83
16	2012 International Energy Conservation Code/International Residential Code Testing Protocols	84

DRAFT

Maricopa Association of Governments Building Code Amendments and Standards Manual BCAS #1	
Title: **Sound Transmission Control near Luke Air Force Base**	MARICOPA ASSOCIATION of GOVERNMENTS **BCAS Manual**
Originally Reviewed by MAG Building Codes Committee: **4/17/1996**	
Updated by MAG Building Codes Committee: **3/21/2012**	

DRAFT

Section 1215 – Definitions
In this standard, unless the context otherwise requires:

"American Society for Testing and Materials (ASTM)" means an organization which develops and publishes recommended practices and standards for a broad range of testing and material properties issues.

"A-WEIGHTED SOUND LEVEL" means a quantity, in decibels, read from a standard sound level meter which discriminates against the lower frequencies to which the ear is less sensitive. The A-weighted scale attempts to approximate the auditory sensitivity of the human ear.

"DAY-NIGHT AVERAGE SOUND LEVEL (DNL)" means the A-weighted equivalent continuous sound exposure for a 24 hour period with a 10 dB adjustment added to sound levels occurring during nighttime hours (10 p.m. to 7 a.m.)

"INTERIOR NOISE LEVEL" means the sound level of noise in any habitable room with windows and doors closed.

"NOISE CONTOURS" mean lines which connect points subject to equal noise levels expressed in terms of average daily noise over a 24-hour period.

"R-VALUE" means insulation properties of an assembly. Insulation properties are further defined as the ability to reduce the factor of heat transmission or loss.

"SOUND TRANSMISSION CLASS (STC)" means a single-number rating for describing sound transmission loss of a wall, roof, floor, window, door, partition or other individual building components or assemblies.

Section 1217 – Application to New Buildings
The criteria of this ordinance establish the minimum requirements for acoustic design of the exterior envelope of buildings and for through-the- wall ventilation (HVAC) units and their parts. These requirements shall apply to all new buildings and alterations for first occupancy after October 1, 1996

that are located on property on which the average sound level is sixty-five decibels or greater. This noise level is defined by the noise contours for Luke Air Force Base prepared as a part of the 1988 Maricopa Association of Governments Westside Joint Land Use Study (see Exhibit 1). The criteria of this ordinance do not apply to ancillary buildings used in agricultural land use.

Section 1219 – Application to Existing Buildings

A. Additions may be made to existing buildings without making the entire building comply with all the requirements of this ordinance for new construction.
B. If the gross floor area of a building is expanded by less than fifty per cent, the requirements of this section apply only to the area of expansion. If the gross floor area of a non-residential building is expanded by fifty percent or more, the requirements of this section apply to the entire building.
C. Any change in occupancy or use of a building shall not be permitted unless the building or portion of the building complies with this ordinance.

Section 1221 – Plans and Specifications

The plans and specifications shall show in sufficient detail all pertinent data and features of the building and the equipment and systems, as herein governed, including, but not limited to: exterior envelope component materials; STC ratings of applicable component assemblies; R-values of applicable insulation materials; size and type of apparatus and equipment; equipment and system controls and other pertinent data to indicate conformance with the requirements herein.

Section 1223 – Alternative Materials and Methods of Construction

A. The provisions of this ordinance are not intended to prevent the use of any material or method of construction not specifically prescribed by this ordinance, provided any alternative has been approved and its use authorized by the building official.
B. The building official may approve any such alternate, provided the building official finds that the proposed design is satisfactory and complies with the provisions of this ordinance and that the material or method of construction is, for the purpose intended, at least the equivalent of that prescribed in this ordinance in noise level reduction.
C. The building official shall require that sufficient evidence or proof be submitted by a licensed architect or engineer to substantiate any claims that may be made regarding the use of alternative materials and methods. The details of any action granting approval of an alternate shall be recorded and entered in the files of the county, city or town.

Section 1225 – Building Requirements for a Noise Level Reduction of 25 dB Compliance with Section 1231 through Section 1239 in Appendix A shall be deemed to meet requirements for a minimum noise level reduction (NLR) of 25 decibels. This noise level reduction is required within the 65-70 DNL noise contours as depicted in Exhibit 1.

Section 1227 – Building Requirements for a Noise Level Reduction of 30 dB Compliance with Section 1241 through Section 1249 in Appendix A shall be deemed to meet requirements for a minimum noise

DRAFT

level reduction (NLR) of 30 decibels. This noise level reduction is required within the 70-75 DNL noise contours as depicted in Exhibit 1.

Section 1229 – Building Requirements for a Noise Level Reduction of 35 dB
Compliance with Section 1251 through Section 1259 in Appendix A shall be deemed to meet requirements for a minimum noise level reduction (NLR) of 35 decibels. This noise level reduction is required within the 75-80 DNL noise contours as depicted in Exhibit 1.

Appendix A

General		
25db Reduction (within 65-70 DLN Noise Contours)	**30db Reduction (within 70-75 DLN Noise Contours)**	**35db Reduction (within 75-80 DLN Noise Contours)**
Section 1231	**Section 1241**	**Section 1251**
A. Brick veneer, masonry blocks, or stucco exterior walls shall be constructed airtight. All joints shall be grouted or caulked airtight.	A. Brick veneer, masonry blocks, or stucco exterior walls shall be constructed airtight. All joints shall be grouted or caulked airtight.	A. Brick veneer, masonry blocks, or stucco exterior walls shall be constructed airtight. All joints shall be grouted or caulked airtight.
B. At the penetration of exterior walls by pipes, ducts, or conduits, the space between the wall and pipes, ducts, or conduits shall be caulked or filled with mortar.	B. At the penetration of exterior walls by pipes, ducts, or conduits, the space between the wall and pipes, ducts, or conduits shall be caulked or filled with mortar.	B. At the penetration of exterior walls by pipes, ducts, or conduits, the space between the wall and pipes, ducts, or conduits shall be caulked or filled with mortar.
C. Window and/or through-the-wall ventilation units (HVAC) shall not be used.	C. Window and/or through-the wall ventilation (HVAC) units shall not be used.	C. Window and/or through-the-wall ventilation units (HVAC) shall not be used.
D. Through-the wall/door mail boxes shall not be used.	D. Through-the wall/door mail boxes shall not be used.	D. Through-the wall/door mail boxes shall not be used.
E. All sleeping spaces shall be provided with a sound-absorbing ceiling system and carpeted floors.	E. All sleeping spaces shall be provided with a sound-absorbing ceiling system and carpeted floors.	E. All sleeping spaces shall be provided with a sound-absorbing ceiling system and carpeted floors.
	F. Operational vented fireplaces shall not be used.	F. Operational vented fireplaces shall not be used.
		G. No glass or plastic skylight shall be used.
Exterior Walls		
25db Reduction (within 65-70 DLN Noise Contours)	**30db Reduction (within 70-75 DLN Noise Contours)**	**35db Reduction (within 75-80 DLN Noise Contours)**
Section 1233	**Section 1243**	**Section 1253**
A. Exterior walls, other than as described in this section, shall have a laboratory sound	A. Exterior walls, other than as described in this section, shall have a laboratory sound	A. Exterior walls, other than as described in this section, shall have a laboratory sound

DRAFT

transmission class rating of at least STC 39.	transmission class rating of at least STC 44.	transmission class rating of at least STC 49.
B. Masonry walls having a weight of at least 25 pounds per square foot do not require a furred (stud) interior wall. At least one surface of concrete block walls shall be plastered or painted with heavy “bridging” paint.	B. Masonry walls having a weight of at least 40 pounds per square foot do not require a furred (stud) interior wall. At least one surface of concrete block walls shall be plastered or painted with heavy “bridging” paint.	B. Masonry walls having a weight of at least 75 pounds per square foot do not require a furred (stud) interior wall. At least one surface of concrete block walls shall be plastered or painted with heavy “bridging” paint.
C. Stud walls shall be at least 4 inches in nominal depth and shall be finished on the outside with solid sheathing under an approved exterior wall finish: siding-onsheathing, stucco or brick veneer.	C. Stud walls shall be at least 4 inches in nominal depth and shall be finished on the outside with solid sheathing under an approved exterior wall finish: siding-onsheathing, stucco or brick veneer.	C. Stud walls shall be at least 4 inches in nominal depth and shall be finished on the outside with solid sheathing under an approved exterior wall finish: siding-onsheathing, stucco or brick veneer.
1. Interior surface of the exterior walls shall be of gypsum board or plaster at least ½ inch thick, installed on the studs.	1. Interior surface of the exterior walls shall be of gypsum board or plaster at least ½ inch thick, installed on the studs. The gypsum board or plaster may be fastened rigidly to the studs if the exterior is brick veneer or stucco. If the exterior is siding-on-sheathing, the interior gypsum board or plaster must be fastened resiliently to the studs.	1. Interior surface of the exterior walls shall be of gypsum board or plaster at least 5/8 inch thick, installed on the studs. The gypsum board or plaster may be fastened rigidly to the studs if the exterior is brick veneer or stucco. If the exterior is siding-on-sheathing, the interior gypsum board or plaster must be fastened resiliently to the studs or double thickness must be used.
2. Continuous composition board, plywood or gypsum board sheathing at least ½ inch thick shall cover the exterior side of the wall studs behind wood or metal siding. Asphaltic or wood shake shingles are acceptable in lieu of siding.	2. Continuous composition board, plywood, or gypsum board sheathing at least 3/4 inch thick shall cover the exterior side of the wall studs behind wood or metal siding. The sheathing and facing shall weigh at least 4 pounds per square foot.	2. Continuous composition board, plywood, or gypsum board sheathing at least 1 inch thick shall cover the exterior side of the wall studs. The sheathing and facing shall weigh at least 4 pounds per square foot.
3. Sheathing panels shall be butted tightly and covered on the exterior with overlapping building paper. The top and bottom edges of the sheathing shall be sealed.	3. Sheathing panels shall be butted tightly and covered on the exterior with overlapping building paper. The top and bottom edges of the sheathing shall be sealed.	3. Sheathing panels shall be butted tightly and covered on the exterior with overlapping building paper. The top and bottom edges of the sheathing shall be sealed.
4. Insulation material at least R-11 shall be installed continuously throughout the cavity space behind the exterior sheathing	4. Insulation material at least R-15 shall be installed continuously throughout the cavity space behind the exterior sheathing	4. Insulation material at least R-19 shall be installed continuously throughout the cavity space behind the exterior sheathing

DRAFT

and between wall studs. Insulation shall be glass fiber or mineral wool.	and between wall studs. Insulation shall be glass fiber or mineral wool.	and between wall studs. Insulation shall be glass fiber or mineral wool.
Exterior Windows		
25db Reduction (within 65-70 DLN Noise Contours)	**30db Reduction (within 70-75 DLN Noise Contours)**	**35db Reduction (within 75-80 DLN Noise Contours)**
Section 1234	**Section 1244**	**Section 1254**
A. Windows other than as described in this section shall have a laboratory sound transmission class rating of at least STC-28.	A. Windows other than as described in this section shall have a laboratory sound transmission class rating of at least STC-33.	A. Windows other than as described in this section shall have a laboratory sound transmission class rating of at least STC-38.
B. Glass shall be at least 3/16 inch thick, double glazed.	B. Glass shall be at least 3/16 inch thick, double glazed. Panes of glass shall be separated by a minimum 1/2 inch airspace.	B. Glass shall be at least 3/16 inch thick, double glazed. Panes of glass shall be separated by a minimum 1/2 inch airspace and shall not be equal in thickness.
C. All operable windows shall be weatherstripped and airtight when closed so as to conform to an air infiltration test not to exceed 0.5 cubic foot per minute per foot of crack length in accordance with ASTM E-283-65-T.	C. Double-glazed windows shall employ fixed sash or efficiently weatherstripped, operable sash. The sash shall be rigid and weatherstripped with material that is compressed airtight when the window is closed so as to conform to an infiltration test not to exceed 0.5 cubic foot per minute per foot of crack length in accordance with ASTM E-283-65-T.	C. Double-glazed windows shall employ fixed sash or efficiently weatherstripped, operable sash. The sash shall be rigid and weatherstripped with material that is compressed airtight when the window is closed so as to conform to an infiltration test not to exceed 0.5 cubic foot per minute per foot of crack length in accordance with ASTM E-283-65-T.
D. Glass of fixed sash windows shall be sealed in an airtight manner with a nonhardening sealant or a soft elastomer gasket or glazing tape.	D. Glass of fixed sash windows shall be sealed in an airtight manner with a nonhardening sealant or a soft elastomer gasket or glazing tape.	D. Glass of fixed sash windows shall be sealed in an airtight manner with a nonhardening sealant or a soft elastomer gasket or glazing tape.
E. The perimeter of window frames shall be sealed airtight to the exterior wall construction with a sealant conforming to one of the following Federal specifications: TT-S-00227, TT-S-00230 or TT-S-00153.	E. The perimeter of window frames shall be sealed airtight to the exterior wall construction with a sealant conforming to one of the following Federal specifications: TT-S-00227, TT-S-00230 or TT-S-00153.	E. The perimeter of window frames shall be sealed airtight to the exterior wall construction with a sealant conforming to one of the following Federal specifications: TT-S-00227, TT-S-00230 or TT-S-00153.
F. The total area of glass in both windows and doors in sleeping spaces shall not exceed 20% of the floor area.	F. The total area of glass in both windows and doors in sleeping spaces shall not exceed 20% of the floor area.	F. The total area of glass in both windows and doors in sleeping spaces shall not exceed 20% of the floor area.

DRAFT

Exterior Doors		
25db Reduction (within 65-70 DLN Noise Contours)	**30db Reduction (within 70-75 DLN Noise Contours)**	**35db Reduction (within 75-80 DLN Noise Contours)**
Section 1235	**Section 1245**	**Section 1255**
A. Doors other than as described in this section shall have a laboratory sound transmission class rating of at least STC-28.	A. Doors other than as described in this section shall have a laboratory sound transmission class rating of at least STC-33.	A. Doors other than as described in this section shall have a laboratory sound transmission class rating of at least STC 38.
B. All exterior side-hinged doors shall be solid-core wood or insulated hollow metal at least 1-3/4 inches thick and shall be fully weatherstripped.	B. Double door construction is required for all door openings to the exterior. Openings fitted with side-hinged doors shall have one solid core wood or insulated hollow metal door at least 1-3/4 inches thick separated by an airspace of at least 4 inches from another door, which can be a storm door. Both doors shall be tightly fitted and weatherstripped.	B. Double door construction is required for all door openings to the exterior. The doors shall be side-hinged and shall be solid core wood or insulated hollow metal door at least 1-3/4 inches thick, separated by a vestibule or enclosed porch at least 3 feet in length. Both doors shall be tightly fitted and weatherstripped.
C. Exterior sliding doors shall be weatherstripped with an efficient airtight gasket system with performance as specified in Section 1234 (c). The glass in the sliding doors shall be at least 3/16 inch thick.	C. The glass of double glazed sliding doors shall be separated by a minimum 1/2 inch airspace. Each sliding frame shall be provided with an efficiently airtight weatherstripping material as specified in Section 1244 (c).	C. The glass of double glazed sliding doors shall be separated by a minimum 1/2 inch airspace. Each sliding frame shall be provided with an efficiently airtight weatherstripping material as specified in Section 1254 (c).
D. Glass in doors shall be sealed in an airtight non-hardening sealant or in a soft elastomer gasket or glazing tape.	D. Glass in all doors shall be at least 3/16 inch thick. Glass in double sliding doors shall not be equal in thickness.	D. Glass of all doors shall be at least 3/16 inch thick. Glass in double sliding doors shall not be equal in thickness.
E. The perimeter of door frames shall be sealed airtight to the exterior wall construction (framing) as described in Section 1234 (e).	E. The perimeter of door frames shall be sealed airtight to the exterior wall construction (framing) as indicated in Section 1244 (e).	E. The perimeter of door frames shall be sealed airtight to the exterior wall construction (framing) as indicated in Section 1254 (e).
	F. Glass in doors shall be sealed in an airtight non-hardening sealant or in a soft elastomer gasket or glazing tape.	F. Glass in doors shall be sealed in an airtight non-hardening sealant or in a soft elastomer gasket or glazing tape.
Roofs		
25db Reduction (within 65-70 DLN Noise Contours)	**30db Reduction (within 70-75 DLN Noise Contours)**	**35db Reduction (within 75-80 DLN Noise Contours)**
Section 1236	**Section 1246**	**Section 1256**
A. Combined roof and ceiling	A. Combined roof and ceiling	A. Combined roof and ceiling

DRAFT

construction other than described in this section and Section 1237 shall have a laboratory sound transmission class rating of at least STC-39.	construction other than described in this section and Section 1247 shall have a laboratory sound transmission class rating of at least STC-44.	construction other than described in this section and Section 1257 shall have a laboratory sound transmission class rating of at least STC-49.
B. With an attic or rafter space at least 6 inches deep, and with a ceiling below, the roof shall consist of 1/2 inch composition board, plywood or gypsum board sheathing topped by roofing as required.	B. With an attic or rafter space at least 6 inches deep, and with a ceiling below, the roof shall consist of 3/4 inch closely butted composition board, plywood or gypsum board sheathing topped by roofing as required.	B. With an attic or rafter space at least 6 inches deep, and with a ceiling below, the roof shall consist of 1 inch composition board, plywood or gypsum board sheathing topped by roofing as required.
C. Open beam roof construction shall follow the energy insulation standard method for batt insulation.	C. Open beam roof construction shall follow the energy insulation standard method for batt insulation, except use 1 inch plywood decking with shakes or other suitable roofing material.	C. Open beam roof construction shall follow the energy insulation standard method for batt insulation, except use 1 inch plywood decking with concrete or clay tiles as roofing material.
D. If the underside of the roof is exposed, or if the attic or rafter spacing is less than 6 inches, the roof construction shall have a surface weight of at least 6 pounds per square foot. Rafters, joists, or other framing may not be included in the surface weight calculation.	D. If the underside of the roof is exposed, or if the attic or rafter spacing is less than 6 inches, the roof construction shall have a surface weight of at least 9 pounds per square foot. Rafters, joists or other framing may not be included in the surface weight calculations.	D. If the underside of the roof is exposed, or if the attic or rafter spacing is less than 6 inches, the roof construction shall have a surface weight of 9 pounds per square foot. Rafters, joists or other framing may not be included in the surface weight calculation.
E. Window or dome skylights shall have a laboratory sound transmission class rating of at least STC-28.	E. Window or dome skylights shall have a laboratory sound transmission class rating of at least STC-33.	
Ceiling		
25db Reduction (within 65-70 DLN Noise Contours)	**30db Reduction (within 70-75 DLN Noise Contours)**	**35db Reduction (within 75-80 DLN Noise Contours)**
Section 1237	**Section 1247**	**Section 1257**
A. Gypsum board or plaster ceilings at least 1/2 inch thick shall be provided where required by Section 1236 (B). Ceilings shall be substantially airtight with a minimum of penetrations.	A. Gypsum board or plaster ceilings at least 5/8 inch thick shall be provided where required by Section 1246 (B), above. Ceilings shall be substantially airtight with a minimum of penetrations.	A. Gypsum board or plaster ceilings at least 5/8 inch thick shall be provided where required by Section 1256 (B), above. Ceilings shall be substantially airtight with a minimum of penetrations. The ceiling panels shall be mounted on resilient clips or channels.
B. Glass fiber or mineral wool insulation at least R-19 shall be	B. Glass fiber or mineral wool insulation at least R-25 shall be	B. Glass fiber or mineral wool insulation at least R-30 shall be

DRAFT

provided above the ceiling between joists.	provided above the ceiling between joists.	provided above the ceiling between joists.
Floors		
25db Reduction (within 65-70 DLN Noise Contours)	**30db Reduction (within 70-75 DLN Noise Contours)**	**35db Reduction (within 75-80 DLN Noise Contours)**
Section 1238	**Section 1248**	**Section 1258**
A. Openings to any crawl spaces below the floor of the lowest occupied rooms shall not exceed 2% of the floor area of the occupied rooms.	A. The floor of the lowest occupied rooms shall be slab on fill, below grade, or over a fully enclosed basement or crawl space. All door and window openings in the fully enclosed basement shall be tightly fitted. Crawl space ventilation shall comply with section 1238.	A. The floor of the lowest occupied rooms shall be slab on fill or below grade.
Ventilation		
25db Reduction (within 65-70 DLN Noise Contours)	**30db Reduction (within 70-75 DLN Noise Contours)**	**35db Reduction (within 75-80 DLN Noise Contours)**
Section 1239	**Section 1249**	**Section 1259**
A. A mechanical ventilation system shall be installed that will provide the minimum air circulation and fresh air supply requirements for various uses in occupied rooms without the need to open any windows, doors or other openings to the exterior. The inlet and discharge openings shall be fitted with sheet metal transfer ducts of at least 20 gauge steel, which shall be lined with 1 inch thick coated glass fiber, and shall be at least 5 feet long with one 90 degree bend.	A. A mechanical ventilation system shall be installed that will provide the minimum air circulation and fresh air supply requirements for various uses in occupied rooms without the need to open any windows, doors or other openings to the exterior. The inlet and discharge openings shall be fitted with sheet metal transfer ducts of at least 20 gauge steel, which shall be lined with 1 inch thick coated glass fiber, and shall be at least 5 feet long with one 90 degree bend.	A. A mechanical ventilation system shall be installed that will provide the minimum air circulation and fresh air supply requirements for various uses in occupied rooms without the need to open any windows, doors or other openings to the exterior. The inlet and discharge openings shall be fitted with sheet metal transfer ducts of at least 20 gauge steel, which shall be lined with 1 inch thick coated glass fiber, and shall be at least 10 feet long with one 90 degree bend.
B. Gravity vent openings in attics shall not exceed code minimum in number and size, as practical.	B. Gravity vent openings in attics shall not exceed code minimum in number and size, as practical. The openings shall be fitted with transfer ducts at least 3 feet in length containing internal 1 inch thick coated fiberglass sound-absorbing duct lining. Each duct shall have a lined 90 degree bend in the duct such that there	B. Gravity vent openings in attics shall be as close to code minimum in number and size, as practical. The openings shall be fitted with transfer ducts at least 6 feet in length containing internal 1 inch thick coated fiberglass sound-absorbing duct lining. Each duct shall have a lined 90 degree bend in the duct

DRAFT

	is no direct line-of-sight from the exterior through the duct into the attic.	such that there is no direct line-of-sight from the exterior through the duct into the attic.
C. If a fan is used for forced ventilation, the attic inlet and discharge openings shall be fitted with sheet metal transfer ducts of at least 20 gauge steel, which shall be lined with coated glass fiber 1 inch thick, and shall be at least 5 ft long with one 90 degree bend.	C. If a fan is used for forced ventilation, the attic inlet and discharge openings shall be fitted with sheet metal transfer ducts of at least 20 gauge steel, which shall be lined with coated glass fiber 1 inch thick, and shall be at least 5 ft long with one 90 degree bend.	C. If a fan is used for forced ventilation, the attic inlet and discharge openings shall be fitted with sheet metal transfer ducts of at least 20 gauge steel, which shall be lined with 1 inch thick coated glass fiber, and shall be at least 10 ft long with one 90 degree bend.
D. All other vent ducts connecting the interior space to the outdoors, shall contain at least a 5-foot length of internal sound absorbing duct lining. Each duct shall be provided with a bend in the duct such that there is no direct line-of-sight through the duct from the venting cross-section to the room opening cross-section. Duct lining shall be coated glass fiber duct liner at least 1 inch thick approved and suitable for the intended use.	D. All other vent ducts connecting the interior space to the outdoors, shall contain at least a 10-foot length of internal sound-absorbing duct lining. Each duct shall be provided with a lined 90 degree bend in the duct such that there is no direct line-of sight through the duct from the venting cross-section to the room opening cross-section. Duct lining shall be coated glass fiber duct liner at least 1 inch thick approved and suitable for intended use.	D. All other vent ducts connecting the interior space to the outdoors, shall contain at least a 10-foot length of internal sound-absorbing duct lining. Each duct shall be provided with a lined 90 degree bend in the duct such that there is no direct line-of-sight through the duct from the venting cross section to the room-opening cross section. Duct lining shall be coated glass fiber duct liner at least 1 inch thick approved and suitable for intended use.
E. Domestic range exhaust ducts connecting the interior space to the outdoors shall contain a baffle plate across the exterior termination which allows proper ventilation. The dimensions of the baffle plate should extend at least one diameter beyond the line of sight into the vent duct. The baffle plate shall be of the same material and thickness as the vent duct material.	E. Domestic range exhaust ducts connecting the interior space to the outdoors shall contain a self-closing baffle plate across the exterior termination which allows proper ventilation. Each duct shall be provided with a bend in the duct such that there is no direct line-of sight through the duct from the venting cross-section to the room opening cross-section. The dimensions of the baffle plate should extend at least one diameter beyond the line of sight into the vent duct. The baffle plate shall be made of the same material and thickness as the vent duct material.	E. Domestic range exhaust ducts connecting the interior space to the outdoors shall contain a self-closing baffle plate across the exterior termination which allows proper ventilation. The dimensions of the baffle plate should extend at least one diameter beyond the line of sight into the vent duct. The baffle plate shall be of the same material and thickness as the vent duct material. The duct shall be offset such that there is no direct line-of-sight through the duct.
F. Fireplaces shall be provided with well fitted dampers as required for the type of fuel	F. Building heating units with flues or combustion air vents shall be located in a closet or	F. Building heating units with flues or combination air vents shall be located in a closet or

DRAFT

being used and tightly fitted glass doors.	room closed off from the occupied space by doors.	room closed off from the occupied space by doors.
	G. Doors between occupied space and mechanical equipment areas shall be solid core wood or 20 gauge insulated steel hollow metal at least 1-3/4 inch thick and shall be fully weather stripped.	G. Doors between occupied space and mechanical equipment areas shall be solid core wood or 20 gauge insulated hollow metal at least 1-3/4 inch thick and shall be fully weather stripped.

DRAFT

Maricopa Association of Governments Building Code Amendments and Standards Manual BCAS #2	
Title: **MAG Model Standard for Fireplaces, Wood Stoves, and Other Solid Fuel Burning Devices**	MARICOPA ASSOCIATION of GOVERNMENTS **BCAS Manual**
Originally Reviewed by MAG Building Codes Committee: **10/22/1997**	
Updated by MAG Building Codes Committee: **6/20/2012**	

DRAFT

Section 1 – Purpose
The purpose of this standard is to regulate fireplaces, woodstoves, or other solid-fuel burning devices to reduce the amount of air pollution cause by particulate matter and carbon monoxide.

Section 2 – Effective Date
The effective date of the regulations and prohibitions set forth in this standard shall take effect no earlier than December 31, 1998.

Section 3 – Definitions
In this standard, unless the context otherwise requires:

"Fireplace" means a built-in-place masonry hearth and fire chamber or a factory-built appliance, designed to burn solid fuel or to accommodate gas or electric log insert or similar device, and which is intended for occasional recreational or aesthetic use, not for cooking, heating, or industrial purposes.

"Solid Fuel" includes but is not limited to: wood, coal, or other nongaseous or non-liquid fuels, including those fuels defined by the Maricopa County Air Pollution Control Officer as "inappropriate fuel" to burn in residential wood-burning devices.

"Woodstove" means a solid fuel-burning heating appliance including a pellet stove, which is either freestanding or designed to be inserted into a fireplace.

Section 4 – Installation Restrictions

A. On or after the effective date, no person, firm, or corporation shall construct or install a fireplace or woodstove, and the Building Official shall not approve or issue a permit to construct or install a fireplace or woodstove, unless the fireplace or woodstove complies with one of the following:
    1. A fireplace which has a permanently installed gas or electric log;
    2. A fireplace, woodstove, or other solid fuel-burning appliance which has been certified by the United States Environmental Protection Agency (EPA) as conforming to 40 Code Federal Regulations Part 60, Subpart, AAA as in effect on July 1, 1990;

3. A fireplace, woodstove, or other solid fuel-burning appliance which has been tested and listed by a nationally recognized testing agency to meet performance standards equivalent to those adopted by 40 Code of Federal Regulations Part 60, Subpart AAA as in effect on July 1, 1990;
4. A fireplace, woodstove, or other solid fuel-burning appliance which has been determined by the Maricopa County Air Pollution Control Officer to meet the performance standards equivalent to those adopted by 40 Code of Federal Regulations Part 60, Subpart AAA as in effect on July 1, 1990; or
5. A fireplace which has a permanently installed woodstove insert which complies with subsection 2, 3, or 4 above.

B. The following installations are not regulated by this standard and are not prohibited by this standard:
   1. Furnaces, boilers, incinerators, kilns, and other similar space heating or industrial process equipment;
   2. Cookstoves, barbecue grills, and similar appliances designed primarily for cooking; or
   3. Fire pits, barbecue grills, and other outdoor fireplaces.

Section 5 – Fireplace or Woodstove Alterations Prohibited

A. On or after the effective date, no person, firm, or corporation shall alter or remove a gas or electric log insert or a woodstove insert from a fireplace for purposes of converting the fireplace to directly burn wood or other solid fuel.
B. On or after the effective date, no person, firm, or corporation shall alter a fireplace, woodstove or other solid fuel-burning appliance in any manner that would void its certification or operational compliance with the provisions of this standard.

Section 6 – Permits Required

In addition to the provisions and restrictions of this standard, construction, installation or alteration of all fireplaces, woodstoves, and other gas, electric, or solid fuel-burning appliances and equipment shall be done in compliance with provisions of the Construction Code and shall be subject to the permits and inspections required by the Construction Code.

DRAFT

Maricopa Association of Governments Building Code Amendments and Standards Manual BCAS #3	
Title: **Standards for Earthen Structures and Straw Bale Construction**	MARICOPA ASSOCIATION of GOVERNMENTS **BCAS Manual**
Originally Reviewed by MAG Building Codes Committee: **2/17/1999**	
Updated by MAG Building Codes Committee: **11/14/2012**	

DRAFT

Earthen Wall Structures

Section R614.1 General. Earthen wall structures in Seismic Design Category A, B or C with basic wind speed of 90 mph or less with wind exposure category of A, B, or C may be designed and constructed in accordance with the provisions of this standard.

This Section shall comply with the seismic requirements of the *International Residential Code.*

Exception: Structures with any site conditions may be designed with accepted engineering practice for earthen wall structures and the provisions of the approved Standard for IBC Earthen Structures.

Section R614.1.1 Earthen materials. This section shall establish minimum standards for safety for construction of earthen materials structures, collectively known as adobe, rammed earth, and hydraulic pressed unit construction.

Section R614.1.2 Professional registration not required. When the empirical design provisions of this section are used to design wall systems, project drawings, typical details and specifications are not required to bear the seal of an architect or engineer.

Section R614.1.3 Professional registration required. When the earthen structure exceeds the empirical design provisions of this standard, the plans and specifications shall be prepared by an Arizona Registrant. All such projects shall be designed in accordance with the approved Standard for IBC Earthen Structures.

Section R614.2 Dimensions of earth walls. Dimensions of earthen walls shall conform to the requirements of this section.

Section R614.2.1 Thickness and Height. The minimum thickness and maximum height of earthen walls and parapets shall be in accordance with Tables R614.2.1 (1 to 6) based upon the Sds value for the project site. Wall thickness shall be measured from face to face of walls with concave joints. Walls with rake joints shall be measured surface of joint to surface of joint. The thickness of wall sections shall not be combined without full cross bonding of the masonry units throughout the wall.

Exception: Walls supported only at ground level and only supported at the base of the wall shall be limited to a height of ½ that allowed by Tables R614.2.1 (1 to 6).

DRAFT

Table R614.2.1 (1)

Seismic Sites w/ Sds 0.00 TO 0.25

Assuming zero tension out-of-plane

Actual Wall Thickness (in)											
	10	11	12	13	14	15	16	18	20	22	24
Maximum Wall Height (in)											
Exterior	NP	83	99	116	135	144	144	144	144	144	144
Interior	127	140	144	144	144	144	144	144	144	144	144
Parapet	NP	22	24	26	28	30	32	36	40	44	48
Bond Beam Size and Steel Requirements											
All Bond Beams 8” Minimum Height											
Exterior Wall No Parapet											
Type “A”	2 - #4	2 - #4	2 - #5	2 - #5	2 - #5	2 - #5	2 - #4	2 - #4	2 - #4	2 - #4	2 - #4
Type “B”	2 - #5	2 - #5	2 - #5	4 - #4	4 - #4	4 - #4	2 - #5	2 - #4	2 - #4	2 - #4	2 - #4
Type “C”	NP	NP	NP	NP	NP	4 - #5	4 - #4	2 - #4	2 - #4	2 - #4	2 - #4
Exterior Wall w/ Full Parapet											
Type “A”	2 - #4	2 - #4	2 - #5	2 - #5	2 - #5	2 - #5	2 - #4	2 - #4	2 - #4	2 - #4	2 - #4
Type “B”	2 - #5	2 - #5	2 - #5	4 - #4	4 - #4	4 - #4	2 - #5	2 - #4	2 - #4	2 - #4	2 - #4
Type “C”	NP	NP	NP	NP	NP	4 - #5	4 - #4	2 - #4	2 - #4	2 - #4	2 - #4
Interior Wall w/ infill between beams											
Type “A”	2 - #4	2 - #4	2 - #5	2 - #5	2 - #5	2 - #5	2 - #4	2 - #4	2 - #4	2 - #4	2 - #4
Type “B”	2 - #5	2 - #5	2 - #5	4 - #4	4 - #4	4 - #4	2 - #5	2 - #4	2 - #4	2 - #4	2 - #4
Type “C”	NP	NP	NP	NP	NP	4 - #5	4 - #4	2 - #4	2 - #4	2 - #4	2 - #4

NP = This Wall is Not Permitted

DRAFT

Table R614.2.1 (2)

Seismic Sites w/ Sds 0.25 TO 0.30

Assuming zero tension out-of-plane

Actual Wall Thickness (in)											
	10	11	12	13	14	15	16	18	20	22	24
Maximum Wall Height (in)											
Exterior	NP	83	99	116	135	144	144	144	144	144	144
Interior	106	116	127	137	144	144	144	144	144	144	144
Parapet	NP	22	24	26	28	30	32	36	40	44	48
Bond Beam Size and Steel Requirements											
All Bond Beams 8” Minimum Height											
Exterior Wall No Parapet											
Type “A”	2 - #4	2 - #5	2 - #5	2 - #5	4 - #4	4 - #4	2 - #5	2 - #4	2 - #4	2 - #4	2 - #4
Type “B”	2 - #5	4 - #4	4 - #4	4 - #5	4 - #5	4 - #5	4 - #4	2 - #5	2 - #4	2 - #4	2 - #4
Type “C”	NP	NP	NP	NP	NP	4 - #5	4 - #5	2 - #5	2 - #4	2 - #4	2 - #4
Exterior Wall w/ Full Parapet											
Type “A”	2 - #4	2 - #5	2 - #5	2 - #5	4 - #4	4 - #4	2 - #5	2 - #4	2 - #4	2 - #4	2 - #4
Type “B”	2 - #5	4 - #4	4 - #4	4 - #5	4 - #5	4 - #5	4 - #4	2 - #5	2 - #4	2 - #4	2 - #4
Type “C”	NP	NP	NP	NP	NP	4 - #5	4 - #5	2 - #5	2 - #4	2 - #4	2 - #4
Interior Wall w/ infill between beams											
Type “A”	2 - #4	2 - #5	2 - #5	2 - #5	4 - #4	4 - #4	2 - #5	2 - #4	2 - #4	2 - #4	2 - #4
Type “B”	2 - #5	4 - #4	4 - #4	4 - #5	4 - #5	4 - #5	4 - #4	2 - #5	2 - #4	2 - #4	2 - #4
Type “C”	NP	NP	NP	NP	NP	4 - #5	4 - #5	2 - #5	2 - #4	2 - #4	2 - #4

Bond Beam Load	46	61	79	100	125	125	108	80	42	0	0
Bond Beam Load	81	103	130	160	194	204	198	194	183	171	203
Bond Beam Load	84	100	118	137	150	151	152	155	158	161	164

NP = This Wall is Not Permitted

DRAFT

Table R614.2.1 (3)

Seismic Sites w/ Sds 0.30 TO 0.35

Assuming zero tension out-of-plane

Actual Wall Thickness (in)											
	10	11	12	13	14	15	16	18	20	22	24
Maximum Wall Height (in)											
Exterior	NP	83	99	116	127	136	144	144	144	144	144
Interior	91	100	109	118	127	136	144	144	144	144	144
Parapet	NP	22	24	26	28	30	32	36	40	44	48
Bond Beam Size and Steel Requirements											
All Bond Beams 8” Minimum Height											
Exterior Wall No Parapet											
Type “A”	2 - #5	2 - #5	2 - #5	4 - #4	4 - #4	4 - #5	4 - #5	4 - #4	2 - #5	2 - #4	2 - #4
Type “B”	4 - #4	4 - #4	4 - #5	4 - #5	4 - #5	4 - #5	4 - #5	4 - #4	2 - #5	2 - #4	2 - #4
Type “C”	NP	NP	NP	NP	NP	4 - #6	4 - #6	4 - #5	4 - #4	2 - #5	2 - #4
Exterior Wall w/ Full Parapet											
Type “A”	2 - #5	2 - #5	2 - #5	4 - #4	4 - #4	4 - #5	4 - #5	4 - #4	2 - #5	2 - #4	2 - #4
Type “B”	4 - #4	4 - #4	4 - #5	4 - #5	4 - #5	4 - #5	4 - #5	4 - #4	2 - #5	2 - #4	2 - #4
Type “C”	NP	NP	NP	NP	NP	4 - #6	4 - #6	4 - #5	4 - #4	2 - #5	2 - #4
Interior Wall w/ infill between beams											
Type “A”	2 - #5	2 - #5	2 - #5	4 - #4	4 - #4	4 - #5	4 - #5	4 - #4	2 - #5	2 - #4	2 - #4
Type “B”	4 - #4	4 - #4	4 - #5	4 - #5	4 - #5	4 - #5	4 - #5	4 - #4	2 - #5	2 - #4	2 - #4
Type “C”	NP	NP	NP	NP	NP	4 - #6	4 - #6	4 - #5	4 - #4	2 - #5	2 - #4

Bond Beam Load	53	71	92	117	137	157	176	156	127	88	40
Bond Beam Load	94	121	151	186	218	250	281	289	291	287	277
Bond Beam Load	86	103	120	140	160	182	203	206	210	213	216

NP = This Wall is Not Permitted

DRAFT

Table R614.2.1 (4)

Seismic Sites w/ Sds 0.35 TO 0.40

Assuming zero tension out-of-plane

Actual Wall Thickness (in)											
	10	11	12	13	14	15	16	18	20	22	24
Maximum Wall Height (in)											
Exterior	NP	83	95	103	111	119	127	143	144	144	144
Interior	79	87	95	103	111	119	127	143	144	144	144
Parapet	NP	22	24	26	28	30	32	36	40	44	48
Bond Beam Size and Steel Requirements											
All Bond Beams 8” Minimum Height											
Exterior Wall No Parapet											
Type “A”	2 - #5	2 - #5	4 - #4	4 - #4	4 - #4	4 - #5	4 - #5	4 - #5	4 - #4	2 - #5	2 - #5
Type “B”	4 - #4	4 - #5	4 - #5	4 - #5	4 - #5	4 - #5	4 - #5	4 - #5	4 - #5	4 - #4	2 - #5
Type “C”	NP	NP	NP	NP	NP	4 - #6	4 - #6	4 - #6	4 - #5	4 - #5	2 - #5
Exterior Wall w/ Full Parapet											
Type “A”	2 - #5	2 - #5	4 - #4	4 - #4	4 - #4	4 - #5	4 - #5	4 - #5	4 - #4	2 - #5	2 - #5
Type “B”	4 - #4	4 - #5	4 - #5	4 - #5	4 - #5	4 - #5	4 - #5	4 - #5	4 - #5	4 - #4	2 - #5
Type “C”	NP	NP	NP	NP	NP	4 - #6	4 - #6	4 - #6	4 - #5	4 - #5	2 - #5
Interior Wall w/ infill between beams											
Type “A”	2 - #5	2 - #5	4 - #4	4 - #4	4 - #4	4 - #5	4 - #5	4 - #5	4 - #4	2 - #5	2 - #5
Type “B”	4 - #4	4 - #5	4 - #5	4 - #5	4 - #5	4 - #5	4 - #5	4 - #5	4 - #5	4 - #4	2 - #5
Type “C”	NP	NP	NP	NP	NP	4 - #6	4 - #6	4 - #6	4 - #5	4 - #5	2 - #5

Bond Beam Load	61	81	101	118	137	157	179	227	211	181	142
Bond Beam Load	108	138	168	198	229	263	299	379	399	409	412
Bond Beam Load	89	105	123	143	163	186	209	260	268	272	276

NP = This Wall is Not Permitted

DRAFT

Table R614.2.1 (5)

Seismic Sites w/ Sds 0.40 TO 0.45

Assuming zero tension out-of-plane

Actual Wall Thickness (in)											
	10	11	12	13	14	15	16	18	20	22	24
Maximum Wall Height (in)											
Exterior	NP	78	85	92	99	106	113	127	141	144	144
Interior	70	78	85	92	99	106	113	127	141	144	144
Parapet	NP	22	24	26	28	30	32	36	40	44	48
Bond Beam Size and Steel Requirements											
All Bond Beams 8” Minimum Height											
Exterior Wall No Parapet											
Type “A”	2 - #5	2 - #5	4 - #4	4 - #4	4 - #4	4 - #5	4 - #5	4 - #5	4 - #5	4 - #5	4 - #4
Type “B”	4 - #5	4 - #5	4 - #5	4 - #5	4 - #5	4 - #5	4 - #5	4 - #5	4 - #6	4 - #5	4 - #5
Type “C”	NP	NP	NP	NP	NP	4 - #6	4 - #6	4 - #6	4 - #6	4 - #6	4 - #5
Exterior Wall w/ Full Parapet											
Type “A”	2 - #5	2 - #5	4 - #4	4 - #4	4 - #4	4 - #5	4 - #5	4 - #5	4 - #5	4 - #5	4 - #4
Type “B”	4 - #5	4 - #5	4 - #5	4 - #5	4 - #5	4 - #5	4 - #5	4 - #5	4 - #6	4 - #5	4 - #5
Type “C”	NP	NP	NP	NP	NP	4 - #6	4 - #6	4 - #6	4 - #6	4 - #6	4 - #5
Interior Wall w/ infill between beams											
Type “A”	2 - #5	2 - #5	4 - #4	4 - #4	4 - #4	4 - #5	4 - #5	4 - #5	4 - #5	4 - #5	4 - #4
Type “B”	4 - #5	4 - #5	4 - #5	4 - #5	4 - #5	4 - #5	4 - #5	4 - #5	4 - #6	4 - #5	4 - #5
Type “C”	NP	NP	NP	NP	NP	4 - #6	4 - #6	4 - #6	4 - #6	4 - #6	4 - #5

Bond Beam Load	68	85	101	118	137	157	179	227	280	274	243
Bond Beam Load	121	149	177	208	241	276	314	398	491	530	548
Bond Beam Load	91	108	126	146	167	189	213	265	322	339	343

NP = This Wall is Not Permitted

DRAFT

Table R614.2.1 (6)

Seismic Sites w/ Sds 0.45 TO 0.50

Assuming zero tension out-of-plane

Actual Wall Thickness (in)											
	10	11	12	13	14	15	16	18	20	22	24
Maximum Wall Height (in)											
Exterior	NP	70	76	82	89	95	101	114	127	140	144
Interior	63	70	76	82	89	95	101	114	127	140	144
Parapet	NP	22	24	26	28	30	32	36	40	44	48
Bond Beam Size and Steel Requirements											
All Bond Beams 8” Minimum Height											
Exterior Wall No Parapet											
Type “A”	2 - #5	2 - #5	4 - #4	4 - #4	4 - #4	4 - #5	4 - #5	4 - #5	4 - #5	4 - #5	4 - #5
Type “B”	4 - #5	4 - #5	4 - #5	4 - #5	4 - #5	4 - #5	4 - #5	4 - #5	4 - #6	4 - #6	4 - #6
Type “C”	NP	NP	NP	NP	NP	4 - #6	4 - #6	4 - #6	4 - #6	4 - #6	4 - #6
Exterior Wall w/ Full Parapet											
Type “A”	2 - #5	2 - #5	4 - #4	4 - #4	4 - #4	4 - #5	4 - #5	4 - #5	4 - #5	4 - #5	4 - #5
Type “B”	4 - #5	4 - #5	4 - #5	4 - #5	4 - #5	4 - #5	4 - #5	4 - #5	4 - #6	4 - #6	4 - #6
Type “C”	NP	NP	NP	NP	NP	4 - #6	4 - #6	4 - #6	4 - #6	4 - #6	4 - #6
Interior Wall w/ infill between beams											
Type “A”	2 - #5	2 - #5	4 - #4	4 - #4	4 - #4	4 - #5	4 - #5	4 - #5	4 - #5	4 - #5	4 - #5
Type “B”	4 - #5	4 - #5	4 - #5	4 - #5	4 - #5	4 - #5	4 - #5	4 - #5	4 - #6	4 - #6	4 - #6
Type “C”	NP	NP	NP	NP	NP	4 - #6	4 - #6	4 - #6	4 - #6	4 - #6	4 - #6

Bond Beam Load	70	85	101	118	137	157	179	227	280	338	345
Bond Beam Load	129	156	185	218	252	290	330	417	515	623	683
Bond Beam Load	93	110	129	149	170	193	217	269	327	390	417

NP = This Wall is Not Permitted

DRAFT

Section R614.2.2 Maximum length. The maximum length of any earthen wall laterally braced by Bond Beams per Section R614.5.2 shall be 20 feet (6,096 mm) between perpendicular bracing walls. Any wall in excess of 20 feet (6,096 mm) shall be designed in accordance with the approved Standard for IBC Earthen Structures.

Section R614.3 Support conditions. Earthen walls shall be supported on a solid concrete, solid masonry foundation system the width of which shall be not be less than 1/2 inch narrower than the earthen wall which it supports. Earthen structures shall not be less than 6 inches above adjacent grade.

Section R614.3.1 Moisture barrier. A moisture barrier equal to 30 lb. asphalt impregnated building paper, or equivalent moisture resistant barrier, shall be installed between the supporting foundation and the earthen wall material.

Section R614.4 Allowable stresses. Allowable compressive, tensile and shear stresses in earthen walls shall not exceed the values prescribed in Table R614.4. In determining the stresses in masonry, the effects of all loads and conditions of loading and the influence of all forces affecting the design and strength of the several parts shall be taken into account. Bolts in shear shall be limited to those values in *International Building Code* Table 2109.3.3.1.

Section R614.4.1 Combined units. In walls composed of different kinds or grades of units, materials or mortars, the maximum stress shall not exceed the allowable stress for the weakest of the combination of units, materials and mortars of which the wall is composed. The net thickness of any facing unit of earthen materials used to resist stress shall not be less than 3 inches (76.2 mm).

When dissimilar materials, (e.g. concrete masonry or steel) are used to support earth wall construction, such elements shall be structurally isolated from other earth wall elements. The design shall recognize, with specific detailing, the effects shrinkage of the earth wall construction may have on the structural integrity of the structure.

DRAFT

Table R614.4	
Allowable Stresses for Empirical Design of Earthen Wall Structures	
Strength of Unit, Gross Area	**Allowable Stresses, Gross Sectional Area [1]**
Compression: 300 psi	Compressive Stress: 30 psi
Modulus of rupture: 50 psi	Allowable tension w/o tensile reinforcing: 0 psi
Shear: N/A	Shear with Special Inspection: 8 psi
	Shear w/o Special Inspection: 4 psi
Modulus of Elasticity: 60,000 psi	Allowable Deflection: Less than 0.5%
Notes:	
1. Gross cross-sectional area shall be calculated on the actual rather than the nominal dimensions.	

Section R614.5 Lateral support. Earthen walls constructed of earthen units shall be bonded and tied to intersecting earthen walls and laterally supported in the vertical direction in accordance with one of the methods in Section R614.5.2 or Section R614.5.3.

Section R614.5.2 Bond Beams. A continuous concrete bond beam system embedded in the earthen walls, designed to provide lateral support for the walls without the aid of additional bracing elements such as roof diaphragm. Bond beams shall be not less than the width of the wall minus 6 inches (152.4 mm) and a height of not less than 8 inches. Bond beams shall be reinforced as required by Tables R614.2.1 (1 to 6). Bars shall be placed not more than 1 ½" from the inside face of the form or veneer block as indicated in Figure R614.5.2.1.

Figure R614.5.2.1

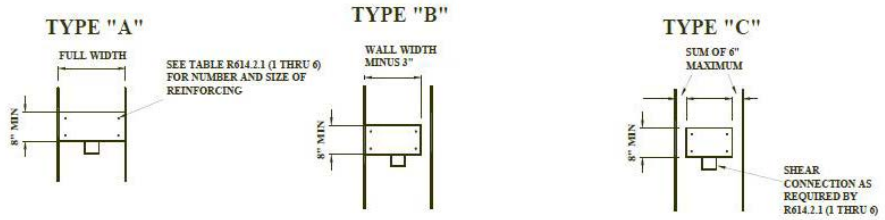

DRAFT

Section R614.5.2.2.1 Bond beam anchorage. Bond beams shall be anchored to earthen walls at intervals of not over 48 inches (1219 mm) by a connection with shear strength of not less than 200 lbs. per lineal foot plus an additional 25 lbs. per lineal foot for every inch of thickness in excess of 16" thick.

Section R614.5.3 Roof diaphragm. A roof diaphragm complying with the *International Residential Code* adequate to provide not less than 200 lbs. per lineal foot of lateral support may be used to brace earthen walls. Earthen walls shall be anchored to roof diaphragms with connections to resist loads of not less than 200 lbs. per lineal foot plus an additional 25 lbs. per lineal foot for every inch of thickness in excess of 16" thick. This anchorage shall be tie beams as specified in Section R614.5.3.2 or other anchorage methods of equal strength.

Section R614.5.3.1 Tie beams. A tie beam is a concrete or masonry, beam built into the earthen wall for the purpose of anchoring the roof diaphragm and transferring the lateral perpendicular and parallel forces. Tie beams shall be provided for all earthen walls laterally braced by a roof diaphragm. Tie beams shall be anchored to the roof diaphragm system at intervals not exceeding 4 feet (1219 mm).

Tie beams shall be not less than ½ the width of the earthen wall, a minimum of 8 inches (203.2 mm) high and reinforced with 2 - #4 reinforcing bars.

Section R614.5.3.2 Tie beam anchorage. Tie beams shall be anchored to earthen walls at intervals of not over 48 inches (1219 mm) by a connection with shear strength of not less than 200 lbs. per lineal foot plus an additional 25 lbs. per lineal foot for every inch of thickness in excess of 16" thick.

Section R614.6 Lintels. Earthen walls over openings shall be supported by steel lintels, reinforced concrete or masonry lintels or earthen arches designed to support load imposed. Lintels shall not be supported by rigid structural columns, frames or posts with rigidities greater than the earthen wall unless the design allows for the potential for differential settlements.

Small openings less than 12" may be constructed without structural lintels.

Section R614.7 Shear walls. earthen walls subject to in-plane loads shall be designed with at least one earthen wall shear panel, at least 4 feet long, free of openings, with a length as computed by Equation R614.7-1.

Equation R614.7-1

L = (Sqrt PL x Sds x 4)

Where:
L= Length of shear panel
PL = Sum of overall length of walls perpendicular to the panel.
Sds = Sds factor as determined by the International Building Code.

DRAFT

Section R614.8 Jambs at openings. Portions of walls between openings or corner shall be constructed with lengths of not less than 1 ½ times the thickness of the wall in which they occur.

Section R614.9 Piers. The thickness of isolated earthen piers shall be not less than 1 ½ times those wall thickness values indicated in Table R614.2.1 (1 to 6). When structural posts or columns are provided within the pier ties, attachments shall be provided to the earthen wall system to laterally secure it.

Section R614.9.1 Pier Cap. A solid concrete cap shall be provided at the top of load bearing piers under all concentrated loads. The cap shall cover not less than 50% of the top of the pier.

Section R614.10 Chases. Chases and recesses in earthen walls shall not be deeper than one-half the thickness of the wall. The maximum length of a horizontal chase or horizontal projection shall not exceed 4 feet (1219 mm), and shall have at least 8 inches (203.2 mm) of masonry in back of the chases and recesses and between adjacent chases or recesses and the jambs of openings.

Chases and recesses in earthen walls shall be designed and constructed so as not to reduce the required strength or required fire resistance of the wall and in no case shall a chase or recess be permitted within the required area of a pier. Masonry directly above chases or recesses wider than 12 inches (304.8 mm) shall be supported on noncombustible lintels.

Section R614.11 Stack bond. When the earthen wall is constructed of units, (e.g. adobe brick), units shall not be laid in stack bond. Units shall, in all locations throughout the wall system, overlap the courses below by not less than one-third the dimension of the units.

Section R614.12 Metal reinforcement. In addition to bonding earthen walls shall be anchored at their intersections, all walls shall be reinforced with joint reinforcement at vertical intervals of not more than 16 inches (406.4 mm). Horizontal reinforcement shall be continuous at the intersections. Reinforcement shall be not more than 4 inches narrower than the wall thickness.

Section R614.13 Veneer. All veneers using earthen materials shall be installed in accordance with this section. Such veneers shall be installed with a noncombustible foundation, over concrete masonry, a backing of wood or cold-formed steel and shall be limited to the first story above grade and be not less than 4 inches (101.6 mm) or greater than 8 inches (203.2 mm) in thickness. Veneers shall not exceed a height of over 20 times their thickness without structural vertical support.

Section R614.13.1 Anchorage. Earth units shall be anchored to the supporting wall with a corrosion-resistant veneer tie system mechanically attached to continuous horizontal joint reinforcement continuously installed in the veneer bed joint not less than 16 inches (406.4 mm) on center vertically. When earth mortar systems are used the tie system shall prevent the accumulation of mortar at the base of the veneer. Conventional brick ties shall not be used to anchor earth units.

Section R614.13.2 Air space. The veneer shall be separated from the sheathing by an air space of a

DRAFT

minimum of 1 inch (25.4 mm) but not more than 2 inches (50.8 mm). A moisture-resistant barrier or 15 lb. asphalt-saturated felt shall be provided except when veneer is applied over concrete masonry or concrete backing.

Section R614.13.3 Flashing. Approved corrosion-resistive flashing shall be provided in the exterior wall envelop in such a manner as to prevent entry of water into the wall cavity or penetration of water into the building structural framing components. The flashing shall extend to the surface of the exterior wall finish and shall be installed to prevent water from reentering the exterior wall envelope. Flashing shall be located beneath the first course of veneer, and at other points of support, including structural floors, shelf angles and lintels. Approved corrosion-resisting flashing shall be installed at all of the following locations:

1. At top of all exterior window and door openings in such a manner as to be leak proof.
2. At the intersection of chimneys or other masonry construction with frame or stucco walls, with projecting lips on both sides under stucco copings.
3. Under and at the ends of masonry, wood or metal copings and sills.
4. Where exterior porches, decks or stairs attach to a wall or floor assembly of wood–frame construction.
5. At wall and roof intersections.

Section R614.13.4 Weep holes. Weep holes shall be provided in the outside withe of masonry walls at a maximum spacing of 33 inches (838.2 mm) on center. Weep holes shall not be less than 3/16 inches (4.76 mm) in diameter. Weep holes shall be located immediately above the flashing.

Section R614.13.5 Plaster veneer. Both interior and exterior faces of earthen walls which are to be plastered with cement plaster shall be lathed and plastered in accordance with the International Residential Code.

Section R614.14 Buttresses. Earthen walls used as buttresses shall not extend beyond an average length perpendicular to the wall to be braced a distance of 6 feet (1829 mm) without consideration to out-of-plane bending of the buttress.

Section R614.15 Gable end walls. Gable end walls shall be constructed using veneer construction or shall be provided with lateral bracing to prevent overturn designed in accordance with the approved Standard for IBC Earthen Structures.

Section R614.16 Ledgers. Ledgers shall not be used to support vertical live and dead loads in excess of 75 lbs. per lineal foot.

Section R614.17 Construction documents. Drawings for earthen structures shall include the following:

1. The Sds number of the site.
2. The wind speed and site exposure coefficient of the site.
3. The material standard to which the earthen materials will comply.

DRAFT

4. The foundation supporting system and moisture barrier material.
5. The length, height and thickness in the actual dimensions of all earthen walls and parapets.
6. The bond beam or tie beam construction and attachment method to the earthen wall.
7. Lintel design, construction and end bearing area.
8. Veneer dimensions, attachment methods, moisture barrier and supporting structure.
9. Flashing materials and installation.
10. Metal reinforcement type and location.

Section R614.18 Corbeled wall elements. The maximum corbeled projection beyond the face of the wall shall not be more than one fourth of the wall thickness.

Section R614.19 Material standards. The materials used in earthen wall structures shall comply with the following material standards. For each of the tests prescribed in these standards, five full size sample units shall be selected at random from each lot of units or fraction thereof produced. Mass wall systems such as rammed earth shall provide at least five tests for each required standard test series.

Section R614.19.1 Manufacturers of earthen materials. Established manufacturers of earthen materials shall certify compliance with these standards. Copies of their periodic testing shall be supplied to the building official when requested. Literature, advertising and other information supplied by the manufacturer to designers and users of earthen materials shall include the actual dimensions of units, not nominal dimensions.

Section R614.19.2 Onsite earthen materials. Earthen units, mortar, rammed earth wall materials mined, mixed, formulated, and or molded on site shall be tested for compliance with these standards. For individual structures, a set of tests shall be provided for the first 2500 square feet of wall and an additional test for each additional 2500 square feet or portion thereof in the structure. At least one set of tests shall be made for each structure and for each 2500 square feet of patio wall. The fabricator of the materials used in the project shall certify in writing to the building official compliance with these standards. The certification shall include the number of units site molded, size of the units, volume of material used as mortar, dates of fabrication, and results of testing of the material. If materials from established manufacturers and onsite materials are used in the project, copies of records including sources, quantities, and location of use within the structure shall be provided to the building official upon request.

Section R614.19.3 Categories of earthen materials. Type I, II, III, and IV earthen materials are approved for use.
Exception: Type I adobe shall only be used for repairs and small additions in which new walls do not exceed 10% of the surface area of existing walls of Type I construction and for structures constructed of a similar material system and for projects requiring this class of materials to meet historic guidelines.

Required plaster veneer. Adobe of Type I and II shall be protected on the exterior with exterior plaster meeting the requirements of *International Residential Code* applied over wire lath. Type I and II adobe

DRAFT

shall not be used within 4 inches of the floor or at the top of parapet walls or near potential sources of water which may affect the stability of the earth wall system. Other Types of adobe may be left un-plastered and may be used without separation from the floor.

Adobe units and mortar. Moisture resistant stabilized adobe units and mortar shall meet the following testing standards as indicated in Table. Type S Portland cement mortar may be used for Type II, III, and IV adobe in lieu of earth mortar.

Table R614.19.3
Required Tests by Material Type

Material **Type**	Dry Compression	Wet Compression	Modulus of Rupture	Absorption <2.5%	Absorption <5.0%	Moisture Content
I	X		X			X
II	X		X		X	X
III	X		X	X		X
IV		X	X			X

X – Indicates that material must pass the test standards prescribed in this Section

Section R614.19.3.1 Dry compression strength. Determine the compressive strength of the required number of samples in accordance with the following:

1. Dry the specimen. Dry the specimen at a temperature of 85° F+-15° F in an atmosphere having relative humidity of not more than 50 percent. Weigh the specimen at one-day intervals until constant weight is attained.
2. Cap the specimen. The specimen may be suitably capped with calcined gypsum mortar or the bearing surfaces may be rubbed smooth and true. Then calcined gypsum is used for capping, conduct the test after the capping has set and the specimen has been dried to constant weight in accordance with item 1 of this section.
3. Test the Specimen. Test the specimens in the position in which the earthen unit is designed to be used. And bed on and cap with a felt pad not less than 1/8 inch or more than ¼ inch in thickness.
4. Testing equipment. The loading head shall completely cover the bearing area of the specimen and the applied load shall be transmitted through a spherical bearing block of proper design. The speed of the moving head of the testing machine shall not be more than 0.05 inch per minute.
5. Reporting results. Calculate the average compressive strength of the specimens tested and report this as the compressive strength of the block. Units shall have an average dry compressive strength of 300 psi and no individual unit may have a strength of less than 250 psi.

Section R614.19.3.2 Wet compression strength. Determine the compressive strength of the required number of specimen in accordance with the following:

1. Wetting the specimen. Submerge the specimen under water for not less than 8 hours or longer as required until fully saturated.

DRAFT

2. Test the specimen. Immediately test the specimen in the position in which the earthen unit is designed to be used. And bed on and cap with a felt pad not less than 1/8 inch or more than ¼ inch in thickness.
3. Testing equipment. The loading head shall completely cover the bearing area of the specimen and the applied load shall be transmitted through a spherical bearing block of proper design. The speed of the moving head of the testing machine shall not be more than 0.05 inch per minute.
4. Reporting results. Calculate the average compressive strength of the specimens tested and report this as the compressive strength of the block. Adobe units shall have an average wet compressive strength of 300 psi. Five samples shall be tested and no individual unit may have a wet compressive strength of less than 250 psi.

Section R614.19.3.3 Modulus of rupture. Adobe units shall have an average modulus of rupture of 50 psi when tested in accordance with the following procedure. Five samples shall be tested and no individual unit shall have a modulus of rupture of less than 35 psi.

Section R614.19.3.3.1 Support conditions. A cured unit shall be simply supported by 2-inch-diameter cylindrical supports located 2 inches in from each end and extending the full width of the unit.

Section R614.19.3.3.2 Loading conditions. A 2-inch-diameter cylinder shall be placed at mid-span parallel to the supports.

Section R614.19.3.3.3 Testing procedure. A vertical load shall be applied to the cylinder at the rate of 500 pounds per minute until failure occurs.

Section R614.19.3.3.4 Modulus of rupture determination. The modulus of rupture shall be determined by the formula:

Equation 2116.3.3.4-1
Fr = 3WLs/2bt2

Where, for the purposes of this section only:

b = Width of the test specimen measured parallel to the loading cylinder, inches.
fr = Modulus of rupture, psi.
Ls = Distance between supports, inches.
T = Thickness of the text specimen measured parallel to the direction of load, inches.
W = The applied load at failure, pounds.

Section R614.19.3.4 Absorption less than 2.5%. A 4-inch cube, cut from an adobe unit fried to a constant weight in a ventilated oven at 212 degrees F to 239 degrees F, shall not absorb more than 2 ½ percent moisture by weight when placed upon a constantly water-saturated, porous surface for 7 days. A minimum of five specimens shall be tested and each specimen shall be cut from a separate unit.

Section R614.19.3.5 Absorption less than 5.0%. A 4-inch cube, cut from an adobe unit fried to a constant weight in a ventilated oven at 212 degrees F to 239 degrees F, shall not absorb more than 5 percent moisture by weight when placed upon a constantly water-saturated, porous surface for 7 days. A minimum of five specimens shall be tested and each specimen shall be cut from a separate unit.

DRAFT

Section R614.19.3.6 Additional Requirements. All earthen units shall meet the following requirements:

1. Moisture content requirements. Earthen units shall have a moisture content not exceeding 4 percent by weight at the time of use.
2. Shrinkage cracks. All earthen units shall not contain more than three shrinkage cracks and any single shrinkage crack shall not exceed 3 inches in length or 1/8 inch in width.
3. Soil requirements. Soil used for moisture resisting adobe units and mortar shall be chemically compatible with the stabilizing material. The soil shall contain sufficient clay to bind the particles together without the aid of stabilizers. The soil shall contain not more than 0.2 percent of water-soluble salts.

Section R614.19.3.7 Cement Stabilized Rammed Earth. Cement stabilized Rammed Earth shall meet the following standards:

1. Testing before Construction. The installer of cement stabilized Rammed Earth shall provide the following testing before issuance of a building permit.
2. Materials from a Licensed Sand and Gravel Producer. A copy of Proctor ASTM D 698 shall be provided for each soil type and source or combination of sources. Periodic testing as provided by the supplier may be supplied to meet this requirement. The soil shall contain not more than 0.2 percent of water-soluble salts.
3. Material Mined and Mixed on Site. A copy of ASTM D 698, ASTM C 117, ASTM C 136, and ASTM D 4318 shall be provided for each soil type and source or combination of sources. Such tests shall be repeated as required to assure that all materials to be used have been tested and are represented by the tests. The soil shall contain not more than 0.2 percent of water-soluble salts.
4. Testing required during Construction. The installer of cement stabilized Rammed Earth shall provide the following tests made during the construction process. A certified testing laboratory shall provide field density tests for comparison to the pre-construction Proctor ASTM D 698, percent moisture ASTM D 2216, dry density ASTM D 698, and percent moisture ASTM D 1556. Cement Stabilized Rammed Earth walls shall meet or exceed 95% maximum dry density (ASTM D 698). Samples taken from the wall shall exceed 300 psi compression (ASTM D 1633) 14 days after placement.

DRAFT

Approved Standard for Earthen IBC Structures

EARTHEN STRUCTURES

Rated Fire-Resistance for Earthen Walls

Material	Item	Construction	4 hour	3 hour	2 hour	1 hour
1a Earthen Walls	1a – 1.1	Solid wall construction utilizing earth as the structural wall	14	12	10	8

Section 2114.1 General. Earthen structures with any site condition may be designed with accepted engineering practice for earthen wall structures and with the provisions of this standard.

Section 2114.1.1 Earthen materials. This section shall establish minimum standards for safety for construction of earthen materials structure, collectively known as adobe, burnt adobe, rammed earth, and hydraulic pressed unit construction.

Section 2114.1.2 Professional registration required. Plans and specifications designed under the provisions of this standard shall be prepared by an Arizona Registrant.

Section 2114.2. Minimum thickness. The minimum thickness of earthen structures shall be designed to limit tension to zero unless tensile reinforcement is provided. Walls shall be designed to meet forces prescribed by the *International Building Code*. The measurement of height of walls shall be the distance between points of lateral support. Wall thickness shall be measured from face to face of each wall withe. The thickness of walls using raked joints shall be the surface to surface distance of the mortar joints. The withes of wall sections shall not be combined without cross bonding of the masonry units throughout the structural element. Cross bonding shall mean overlapping of not less than 1/3 of the dimension of the masonry units.

Section 2114.3 Support conditions. Earthen structures shall be supported on a solid concrete, solid masonry foundation system the width of which shall be not greater than 1/6 inch narrower than the earthen structure which it supports. Earthen structures shall not be less than 6 inches above adjacent grade.

Section 2114.4 Corbeled wall elements. The maximum corbeled projection beyond the face of the wall shall not be more than 4 inches. Such corbeled projections shall add additional thickness to the wall, the opposite face of the wall remaining plane with the primary wall plane.

Section 2114.5 Moisture barrier. A moisture barrier equal to 30 lb. asphalt impregnated building paper, or equivalent moisture resistant barrier, shall be installed between the supporting foundation and the earthen material.

DRAFT

Section 2114.6 Allowable stresses. Allowable compressive, tensile and shear stresses in earthen structures shall not exceed the values prescribed in Table 2114.6.A. In determining the stresses, the effects of all loads and conditions of loading and the influence of all forces affecting the design and strength of the several parts shall be considered. Bolt values shall not exceed those set forth in *International Building Code* Table 2109.3.3.1.

Section 2114.6.1 Combined units. In walls composed of different kinds or grades of units, materials or mortars, the maximum stress shall not exceed the allowable stress for the weakest of the combination of units, materials and mortars of which the wall is composed. The net thickness of any facing unit of earthen materials used to resist stress shall not be less than 3 inches (76 mm).

When dissimilar materials, (e.g. concrete masonry or steel) are used to support earth wall construction, such elements shall be structurally isolated from other earth wall elements. The design shall recognize, with specific detailing, the effects shrinkage of the earth wall construction may have on the structural integrity of the structure.

Table 2114.6.A			
Allowable Stresses for Empirical Design of Earthen Wall Structures			
Strength of Unit, Gross Area		**Allowable Stresses, Gross Sectional Area [1]**	
Compression:	300 psi	Compressive Stress:	30 psi
Modulus of rupture:	50 psi	Allowable tension w/o tensile reinforcing:	0 psi
Shear:	N/A	Shear with Special Inspection:	8 psi
		Shear w/o Special Inspection:	4 psi
Modulus of Elasticity:	60,000 psi	Allowable Deflection:	Less than 0.5%
Notes:			
1. Gross cross-sectional area shall be calculated on the actual rather than the nominal dimensions.			

Section 2114.7 Lateral support. Earthen walls shall be laterally supported in the vertical direction and at intersection with other earthen walls. Support at the top of the wall shall in accordance with one of the methods in Section 2114.7.1 or Section 2114.7.2.

Section 2114.7.1 Bond beams. A continuous bond beam system embedded in the earthen walls, designed to provide lateral support for the walls without the aid of additional bracing elements such as roof diaphragm. Bond beams of concrete or masonry shall be not less than the width of the wall minus 6 inches (152.4 mm).

Section 2114.7.1.1 Bond beam anchorage. Bond beams shall be anchored to earthen walls at intervals of not over 48 inches (1219 mm) by a connection with shear strength of not less than the

DRAFT

shear forces in both directions. The shear between a cast in place concrete bond beam and the earthen wall shall not exceed 1/8 the dead load at the base of the bond beam unless alternate attachment is provided compatible with the allowable stresses in Table 2114.6.A or *International Building Code* Table 2109.3.3.1.

Section 2114.7.2 Roof diaphragm. A roof diaphragm complying with other provisions of this code adequate to provide lateral support may be used to brace earthen walls. Anchorage shall be tie beams as specified in Section 2114.7.2.2 or other anchorage methods of equal strength.

Section 2114.7.2.1 Tie beams. A tie beam is a beam built into the earthen wall for the purpose of anchoring the roof diaphragm and transferring the lateral perpendicular and parallel forces. Tie beams shall be provided for all earthen walls laterally braced by a roof diaphragm.

Section 2114.7.2.2 Tie beam anchorage. Tie beams shall be anchored to earthen walls at intervals of not over 48 inches (1219 mm) by a connection with shear strength of not less than the shear forces in both directions. The shear between a cast in place concrete or masonry tie beam and the earthen wall shall not exceed 1/8 the dead load at the base of the bond beam unless alternate attachment is provided compatible with the allowable stresses in Table 2114.6.A or *International Building Code* Table 2109.3.3.1.

Section 2114.8 Lintels. Earthen walls over openings shall be supported by steel lintels, reinforced concrete or masonry lintels or earthen material arches designed to support load imposed. Lintels shall not be supported by rigid structural columns, frames or posts with rigidities greater than the earthen wall unless the design allows for the potential for differential settlements. Small openings less than 12” (304.8 mm) may be constructed without structural lintels.

Section 2114.9 Shear walls. Earthen walls subject to in-plane loads shall be designed to be tension free unless tensile reinforcement is provided. Solid panels less than 4 feet (1219 mm) shall not be considered shear walls.

Section 2114.10 Opening jambs. Portions of walls between openings shall be constructed with lengths of not less than 1 ½ times the thickness of the wall in which they occur.

Section 2114.11 Freestanding piers. Piers independent of earthen walls shall be designed to support vertical and horizontal loads unless braced by other elements of the structure. Tensile reinforcement shall be provided where tension occurs. When structural posts or columns are provided within the pier ties, attachments shall be provided to the earthen wall system to laterally secure it.

Section 2114.11.1 Pier cap. A solid concrete cap shall be provided at the top of load bearing piers under all concentrated loads. The cap shall cover not less than 50% of the top of the pier.

Section 2114.12 Chases. Chases and recesses in earthen walls shall not be deeper than one-third the thickness of the wall thickness. The maximum length of a horizontal chase or horizontal projection shall not exceed 4 feet (1219 mm), and shall have at least 8 inches (203 mm) of earthen construction in back of the chases and recesses and between adjacent chases or recesses and at least 12 inches (305 mm) between the chase and the jambs of openings.
Chases and recesses in earthen walls shall be designed and constructed so as not to reduce the

DRAFT

required strength or required fire resistance of the wall and in no case shall a chase or recess be permitted within the required area of a pier. Earthen walls directly above chases or recesses wider than 16 inches (305 mm) shall be supported on noncombustible lintels.

Section 2114.13 Stack bond. When the earthen wall is constructed of units, (e.g. adobe brick), units shall not be laid in stack bond. Units shall, in all locations throughout the wall system, overlap the courses below by not less than one-third the dimension of the units.

Exception: Ornamental non-structural elements may be laid in stack bond if properly tied to the main structure.

Section 2114.14 Metal reinforcement. All walls shall be anchored at their intersections, at vertical intervals of not more than 16 inches (406 mm) with joint reinforcement of at least 9 gage when using earthen units (e.g. adobe block). Horizontal reinforcement shall be used throughout the wall system and be continuous at the intersections. Reinforcement used throughout the wall system shall be not more than 4 inches narrower than the wall thickness.

Section 2114.15 Veneer. All veneers using earthen materials shall be installed in accordance with this section. Such veneers shall be installed with a noncombustible foundation, over concrete masonry, a backing of wood or cold-formed steel and the veneer shall be not less than 4 inches (101 mm) or greater than 8 inches (203 mm) in thickness.

Section 2114.15.1 Anchorage. Earth units shall be anchored to the supporting wall with a corrosion- resistant veneer tie system mechanically attached to continuous horizontal joint reinforcement continuously installed in the veneer bed joint not less than 16 inches (406 mm) on center vertically. When earth mortar systems are used the tie system shall prevent the accumulation of mortar at the base of the veneer. Conventional brick ties shall not be used to anchor earth units.

Section 2114.15.2 Air space. The veneer shall be separated from the sheathing by an air space of a minimum of 1 inch (25 mm) but not more than 2 inches (51 mm). A weather-resistant membrane or 15 lb. asphalt-saturated felt shall be provided except when veneer is applied over concrete masonry or concrete backing.

Section 2114.15.3 Flashing. Approved corrosion-resistive flashing shall be provided in the exterior wall envelop in such a manner as to prevent entry of water into the wall cavity or penetration of water into the building structural framing components. The flashing shall extend to the surface of the exterior wall finish and shall be installed to prevent water from reentering the exterior wall envelope. Flashing shall be located beneath the first course of veneer, and at other points of support, including structural floors, shelf angles and lintels. Approved corrosion-resisting flashing shall be installed at all of the following locations:

- At top of all exterior window and door openings in such a manner as to be leak proof.
- At the intersection of chimneys or other masonry construction with frame or stucco walls, with projecting lips on both sides under stucco copings.
- Under and at the ends of masonry, wood or metal copings and sills.
- Where exterior porches, decks or stairs attach to a wall or floor assembly of wood – frame construction.

DRAFT

- At wall and roof intersections.

Section 2114.15.4 Weep holes. Weep holes shall be provided in the outside withe of masonry walls at a maximum spacing of 33 inches (838 mm) on center. Weep holes shall not be less than 3/16 inches (4.8 mm) in diameter. Weep holes shall be located immediately above the flashing.

Section 2114.16 Buttresses. Earthen walls used as buttresses shall not extend beyond an average length perpendicular to the wall to be braced a distance of 6 feet (1830 mm) without consideration to out-of-plane bending of the buttress.

Section 2114.17 Gable End Walls. Gable end walls shall be constructed using veneer construction as required by Section 2114.15 or shall be provided with lateral bracing to prevent overturn.

Section 2114.18 Ledgers. Ledgers shall not be used to support vertical live and dead loads in excess of 75 lbs. per lineal foot unless the tension in the wall due to bending from out-of-plane loads and the eccentric load from the ledger is zero.

Section 2114.19 Material standards. The materials used in earthen wall structures shall comply with the following material standards. For each of the tests prescribed in these standards, five full size sample units shall be selected at random from each lot of units or fraction thereof produced. Mass wall systems such as rammed earth shall provide five tests for each required standard test series.

Section 2114.19.1 Manufacturers of earthen materials. Established manufacturers of earthen materials shall certify compliance with these standards. Copies of their periodic testing shall be supplied to the building official when requested. Literature, advertising and other information supplied by the manufacturer to designers and users of earthen materials shall include the actual dimensions of units, not nominal dimensions.

Section 2114.19.2 Onsite earthen materials. Earthen units, mortar, rammed earth wall materials mined, mixed, formulated, and or molded on site shall be tested for compliance with these standards. For individual structures, a set of tests shall be provided for the first 2500 square feet of wall and an additional test for each additional 2500 square feet or portion thereof in the structure. At least one set of tests shall be made for each structure and for each 2500 square feet of patio wall. The fabricator of the materials used in the project shall certify in writing to the building official compliance with these standards. The certification shall include the number of units site molded, size of the units, volume of material used as mortar, dates of fabrication, and results of testing of the material. If materials from established manufacturers and onsite materials are used in the project, copies of records including sources, quantities, and location of use within the structure shall be provided to the building official upon request.

Section 2114.19.3 Categories of earthen materials. Type I, II, III, and IV earthen materials are approved for use in construction of projects designed in accordance with Section 2114.

Exception: Type I adobe shall only be used for repairs and small additions in which new walls do not exceed 10% of the surface area of existing walls of Type I construction and for structures constructed of a similar material system and for projects requiring this class of materials to meet historic guidelines.

Required plaster veneer. Adobe of Type I and II shall be protected on the exterior with exterior plaster

DRAFT

meeting the requirements of IBC Section 2512 applied over wire lath. Type I and II adobe shall not be used within 4 inches (102mm) of the floor or at the top of parapet walls or near potential sources of water which may affect the stability of the earth wall system. Other Types of adobe may be left unplastered and may be used without separation from the floor.

Adobe units and mortar. Moisture resistant stabilized adobe units and mortar shall meet the following testing standards as indicated in Table 2114.19. Type S portland cement mortar may be used for Type II, III, and IV adobe in lieu of earth mortar.

Table 2114.16.3.1

Material **Type**	Dry Compression	Wet Compression	Modulus of Rupture	Absorption <2.5%	Absorption <5.0%	Moisture Content
I	X		X			X
II	X		X		X	X
III	X		X	X		X
IV		X	X			X

X – Indicates that material must pass the test standards prescribed in this Section

Section 2114.19.4.1 Dry compression strength. Determine the compressive strength of the required number of samples in accordance with the following:

1. Dry the specimen. Dry the specimen at a temperature of 85° F+-15° F in an atmosphere having relative humidity of not more than 50 percent. Weigh the specimen at one-day intervals until constant weight is attained.
2. Cap the specimen. The specimen may be suitably capped with calcined gypsum mortar or the bearing surfaces may be rubbed smooth and true. Then calcined gypsum is used for capping, conduct the test after the capping has set and the specimen has been dried to constant weight in accordance with item 1 of this section.
3. Test the Specimen. Test the specimens in the position in which the earthen unit is designed to be used. And bed on and cap with a felt pad not less than 1/8 inch or more than ¼ inch in thickness.
4. Testing equipment. The loading head shall completely cover the bearing area of the specimen and the applied load shall be transmitted through a spherical bearing block of proper design. The speed of the moving head of the testing machine shall not be more than 0.05 inch (1.27mm) per minute.
5. Reporting results. Calculate the average compressive strength of the specimens tested and report this as the compressive strength of the block. Units shall have an average dry compressive strength of 300 psi (2068 kPa) and no individual unit may have a strength of less than 250 psi (1724 kPa).

Section 2114.19.4.2 Wet compression strength. Determine the compressive strength of the required number of specimen in accordance with the following:

DRAFT

1. Wetting the specimen. Submerge the specimen under water for not less than 8 hours or longer as required until fully saturated.
2. Test the specimen. Immediately test the specimen in the position in which the earthen unit is designed to be used. And bed on and cap with a felt pad not less than 1/8 inch (3.2mm)or more than ¼ inch (6.4mm) in thickness.
3. Testing equipment. The loading head shall completely cover the bearing area of the specimen and the applied load shall be transmitted through a spherical bearing block of proper design. The speed of the moving head of the testing machine shall not be more than 0.05 inch (1.27mm)per minute.
4. Reporting results. Calculate the average compressive strength of the specimens tested and report this as the compressive strength of the block. Adobe units shall have an average wet compressive strength of 300 psi (2068 kPa). Five samples shall be tested and no individual unit may have a wet compressive strength of less than 250 psi (1724 kPa).

Section 2114.19.5 Modulus of rupture. Adobe units shall have an average modulus of rupture of 50 psi (345 kPa) when tested in accordance with the following procedure. Five samples shall be tested and no individual unit shall have a modulus of rupture of less than 35 psi (241 kPa).

Section 2114.19.5.1 Support conditions. A cured unit shall be simply supported by 2-inch-diameter (51 mm) cylindrical supports located 2 inches (51 mm) in from each end and extending the full width of the unit.

Section 2114.19.5.2 Loading conditions. A 2-inch-diameter (51 mm) cylinder shall be placed at midspan parallel to the supports.

Section 2114.19.5.3 Testing procedure. A vertical load shall be applied to the cylinder at the rate of 500 pounds per minute (37 N/s) until failure occurs.

Section 2114.19.5.4 Modulus of rupture determination. The modulus of rupture shall be determined by Equation 2116.3.1.3.4-1.

Equation 2114.19.5.4
Fr = 3WLs/2bt2

Where, for the purposes of this section only:
b = Width of the test specimen measured parallel to the loading cylinder, inches (mm).
fr = Modulus of rupture, psi (Mpa).
Ls = Distance between supports, inches (mm).
t =Thickness of the test specimen measured parallel to the direction of load, inches (mm).
W =The applied load at failure, pounds (N).

Section 2114.19.6 Absorption less than 2.5%. A 4-inch (102 mm) cube, cut from an adobe unit fried to a constant weight in a ventilated oven at 212 degrees F to 239 degrees F , shall not absorb more than 2 ½ percent moisture by weight when placed upon a constantly water-saturated, porous surface for 7 days. A minimum of five specimens shall be tested and each specimen shall be cut from a separate unit.

Section 2114.19.7 Absorption less than 5.0%. A 4-inch (102 mm) cube, cut from an adobe unit fried to a constant weight in a ventilated oven at 212 degrees F to 239 degrees F, shall not absorb more than 5

DRAFT

percent moisture by weight when placed upon a constantly water-saturated, porous surface for 7 days. A minimum of five specimens shall be tested and each specimen shall be cut from a separate unit.

Section 2114.19.8 Additional requirements. All earthen units shall meet the following requirements:

1. Moisture content requirements. Earthen units shall have a moisture content not exceeding 4 percent by weight at the time of use.

2. Shrinkage cracks. All earthen units shall not contain more than three shrinkage cracks and any single shrinkage crack shall not exceed 3 inches (76.2mm) in length or 1/8 inch (3.2mm) in width.

3. Soil requirements. Soil used for moisture resisting adobe units and mortar shall be chemically compatible with the stabilizing material. The soil shall contain sufficient clay to bind the particles together without the aid of stabilizers. The soil shall contain not more than 0.2 percent of water-soluble salts.

Section 2114.19.9 Cement stabilized rammed earth. Cement stabilized Rammed Earth shall meet the following standards:

1. Testing before construction. The installer of cement stabilized Rammed Earth shall provide the following testing before issuance of a building permit.
2. Materials from a licensed sand and gravel producer. A copy of Proctor ASTM D 698 shall be provided for each soil type and source or combination of sources. Periodic testing as provided by the supplier may be supplied to meet this requirement. The soil shall contain not more than 0.2 percent of water-soluble salts.
3. Material mined and mixed on site. A copy of ASTM D 698, ASTM C 117, ASTM C 136, and ASTM D 4318 shall be provided for each soil type and source or combination of sources. Such tests shall be repeated as required to assure that all materials to be used have been tested and are represented by the tests. The soil shall contain not more than 0.2 percent of water-soluble salts.
4. Testing required during construction. The installer of cement stabilized Rammed Earth shall provide the following tests made during the construction process. A certified testing laboratory shall provide field density tests for comparison to the pre-construction Proctor ASTM D 698, percent moisture ASTM D 2216, dry density ASTM D 698, and percent moisture ASTM D 1556. Cement Stabilized Rammed Earth walls shall meet or exceed 95% maximum dry density (ASTM D 698). Samples taken from the wall shall exceed 300 psi compression (2068 kPa) (ASTM D 1633) 14 days after placement.

DRAFT

Approved Standard for Straw-Bale Construction

Straw-Bale Structures

Section 101 Purpose. The purpose of this appendix chapter is to establish minimum prescriptive standards of safety for the construction of structures which use baled straw as a load bearing or non-load bearing material.

Section 102 Scope. The provisions of this chapter shall apply to all structures utilizing straw-bales in the construction of wall systems.

Section 103 Definitions. For the purpose of this chapter, certain terms are defined as follows:

STRAW is the dry stems of cereal grains left after the seed heads have been removed.

BALES are rectangular compressed blocks of straw, bound by strings or wire.

FLAKES are slabs of straw removed from an untied bale. Flakes are used to fill small gaps between the ends of stacked bales.

LAID FLAT refers to stacking bales so that the sides with the largest cross-sectional area are horizontal and the longest dimension of this area is parallel with the wall plane.

LAID ON-EDGE refers to stacking bales so that the sides with the largest cross-sectional area are vertical and the longest dimension of this area is horizontal and parallel with the wall plane.

Section 104 Materials

Section 104.1 Specifications for Bales.

Section 104.1.1 Type of Straw. Bales of various types of straw, including, but not limited to, wheat, rice, rye, barley, oats and similar plants, shall be acceptable if they meet the minimum requirements for density, shape, moisture content, and ties.

Section 104.1.2 Shape. Bales shall be rectangular in shape.

Section 104.1.3 Dimensions. Bales used within a continuous wall shall be of consistent height and width to ensure even distribution of loads within wall systems.

Section 104.1.4 Ties. Bales shall be bound with ties of either polypropylene string or baling wire. Bales with broken or loose ties shall not be used unless the broken or loose ties are replaced with ties which restore the original degree of compaction of the bale.

Section 104.1.5 Moisture Content. Moisture content of bales, at time of installation, shall not exceed 20% of the total weight of the bale. Moisture content of bales shall be determined by one of the following:

DRAFT

1. Field Method. A suitable moisture meter, designed for use with baled straw or hay, and equipped with a probe of sufficient length to reach the center of the bale, shall be used to determine the average moisture content of 5 bales randomly selected from the bales to be used.
2. Laboratory Method. A total of 5 samples, taken from the center of each of 5 bales randomly selected from the bales to be used, shall be tested for moisture content by a recognized testing lab.

Section 104.1.6 Density. Bales in load-bearing structures shall have a minimum calculated dry density of 7.0 pounds per cubic foot (112.13kg/m^3). The calculated dry density shall be determined after reducing the actual bale weight by the weight of the moisture content, as determined in Section 104.1.5. The calculated dry density shall be determined by dividing the calculated dry weight of the bale by the volume of the bale.

Section 104.1.7 Custom Size Bales. Where custom-made partial bales are used, they shall be of the same density, same string or wire tension, and, where possible, use the same number of ties as the standard size bales.

Section 105 Construction and General Requirements

Section 105.1 General. Bale walls, when covered with plaster, drywall or stucco shall be deemed to have the equivalent fire resistive rating as wood frame construction with the same wall-finishing system.

Section 105.2 Wall Thickness. Nominal minimum bale wall thickness shall be 14 inches.

Section 105.3 Wall Height. Bale walls shall not exceed one story in height and the bale portion shall not exceed a height to width ratio of 5.6:1 (for example, the maximum height for the bale portion of a 23 inch thick wall would be 10 feet - 8 inches), unless the structure is designed by an Arizona Registrant. **Exception:** In the non-load bearing exterior end walls of structures with gable or shed roofs, an approved continuous assembly shall be required at the roof bearing assembly level.

Section 105.4 Unsupported Wall Length. The ratio of unsupported wall length to thickness, for bale walls, shall not exceed 13:1 (for a 23-inch thick wall, the maximum unsupported length allowed is 25 feet), unless the structure is designed by an Arizona Registrant.

Section 105.5 Allowable Loads. The allowable vertical load (live and dead load) on the top of bale walls shall not exceed 360 pounds per square foot (psf) (15.17kg/m^2) and the resultant load shall act at the center of the wall. Bale structures shall be designed to withstand all vertical and horizontal loads as specified in the *International Building Code* or the *International Residential Code.*

Section 105.6 Foundations. Foundations shall be sized to accommodate the thickness of the bale wall and the load created by the wall and roof live and dead loads. Foundation (stem) walls which support bale walls shall extend to an elevation of not less than 6 inches (152.4mm) above adjacent ground at all points. The minimum width of the footing shall be the width of the bale it supports, except that the bales may overhang the exterior edge of the foundation by not more than 3 inches (76.2mm) to accommodate rigid perimeter insulation. Footings shall extend a minimum of 12 inches (304.8mm) below natural, undisturbed soil, or to frost line, whichever is lower.

DRAFT

Section 105.7 Wall and Roof Bearing Assembly Anchorage

Section 105.7.1 General. Vertical reinforcing bars with a minimum diameter of 1/2" (12.7mm), shall be embedded in the foundation a minimum depth of 6 inches (152.4mm), and shall extend above foundation a minimum of 12 inches (304.8mm). These vertical bars shall be located along the centerline of the bale wall, spaced not more than 2 feet apart (609.6mm). A vertical bar shall also be located within 1 foot (304.8mm) of any opening or corner, except at locations occupied by anchor bolts.

Section 105.7.2 Intersecting Walls. Walls of other materials intersecting bale walls shall be attached to the bale wall by means of one or more of the following methods or an acceptable equivalent:

1. Wooden dowels at least 5/8" (15.88mm) in diameter of sufficient length to provide 12 inches (304.8mm) of penetration into the bale, driven through holes bored in the abutting stud, and spaced to provide one dowel connection per bale.
2. Pointed wooden stakes, at least 12 inches (304.8mm) in length and 1-1/2" (38.1mm) by 3-1/2" (88.9mm) at the exposed end, fully driven into each course of bales, as anchorage points.
3. Bolted or threaded rod connection of the abutting wall, through the bale wall, to a steel nut and steel or plywood plate washer, a minimum of 6 inches (152.4mm) square and a minimum thickness of 3/16" (4.76mm) for steel and 1/2" (12.7mm) for plywood, in at least three locations.

Section 105.7.3 Anchor Bolts. Load bearing bale walls shall be anchored to the foundation by 1/2" (12.7mm) diameter steel anchor bolts embedded at least 7 inches (177.8mm) in the foundation at intervals of 6 feet (1828.8mm) or less. A minimum of two anchor bolts per wall shall be provided with one bolt located within 36 inches (914.4mm) of each end of each wall. Sections of 1/2" (12.7mm) diameter threaded rod shall be connected to the anchor bolts, and to each other, by means of threaded coupling nuts and shall extend through the roof bearing assembly and be fastened with a steel washer and nut. Bale walls and roof bearing assemblies may be anchored to the foundation by means of other methods which are adequate to resist uplift forces resulting from the design wind load. There shall be a minimum of two points of anchorage per wall, spaced not more than 6 feet (1828.8mm) apart, with one located within 36 inches (914.4mm) of each end of each wall.

The dead load of the roof and ceiling systems will produce vertical compression of the bales. Regardless of the anchoring system used to attach the roof bearing assembly to the foundation, prior to installation of wall finish materials, bolts or straps shall be re-tightened to compensate for this compression.

Section 105.7.4 Moisture Barrier. A moisture barrier shall be used between the top of the foundation and the bottom of the bale wall to prevent moisture from migrating through the foundation into the bottom course of bales. This barrier shall consist of one of the following:

1. Cementitious waterproof coating;
2. Type 30 asphalt felt over an asphalt emulsion;
3. Sheet metal flashing, sealed at joints;
4. Other approved building moisture barrier. All penetrations through the moisture barrier, as well as all joints in the barrier, must be sealed with asphalt, caulking or an approved sealant.

DRAFT

Section 105.7.5 Stacking and Pinning. Bales in load-bearing walls shall be laid flat and stacked in running bond where possible, with each bale overlapping the two bales beneath it. Bales in non load- bearing walls may be laid either flat or on-edge and stacked in running bond where possible. Overlaps shall be a minimum of 12 inches (304.8mm). Gaps between the ends of bales which are less than 6 inches (152.4mm) in width can be filled by an untied flake inserted snugly into the gap.

The first course of bales shall be laid by impaling the bales on the vertical bars or threaded rods, if any, extending from the foundation. When the fourth course has been laid, #4 rebar pins, or an acceptable equivalent, long enough to extend through all four courses, shall be driven down through the bales, two in each bale, located so that they do not pass within 6 inches (152.4mm) of, or through the space between the ends of any two bales. The layout of these pins shall approximate the layout of the vertical bars extending from the foundation. As each subsequent course is laid, two such pins, long enough to extend through the course being laid and the three courses immediately below it, shall be driven down through each bale. This pinning method shall be continued to the top of the wall. In walls seven or eight courses high, pinning at the fifth course may be eliminated.

Only full-length bales shall be used at corners of load bearing walls, unless exceptions are designed by an Arizona Registrant.

Vertical #4 rebar pins, or an acceptable alternative, shall be located within 1 foot of all corners or door openings.

Staples, made of #3 or larger rebar formed into a “U” shape, at least 18 inches (457.2mm) long with two 6 inch (152.4mm) legs, shall be used at all corners of every course, driven with one leg into the top of each abutting corner bale. In lieu of staples, corner bales may be tied together, by a method approved by the building official.

Section 105.7.5.1 Alternative Pinning Method. When the third course has been laid, vertical #4 rebar pins, or an acceptable equivalent, long enough to extend through all three courses, shall be driven down through the bales, two in each bale, located so that they do not pass within 6 inches (152.4mm) of, or through the space between the ends of any two bales. The layout of these rebar pins shall approximate the layout of the rebar pins extending from the foundation. As each subsequent course is laid, two such pins, long enough to extend through that course and the two courses immediately below it shall be driven down through each bale. This pinning method shall be continued to the top of the wall.

Section 105.7.6 Roof Bearing Assembly. Load bearing bale walls shall have a roof bearing assembly at the top of the wall to bear the roof load and to provide a means of connecting the roof structure to the foundation. The roof bearing assembly shall be continuous along the tops of structural walls.

An acceptable roof bearing assembly option consists of two double 2” X 6” (50.8mm X 152.4mm), or larger, horizontal top plates, one located at the inner edge of the wall and the other at the outer edge. Connecting the two doubled top plates and located horizontally and perpendicular to the length of the wall shall be 2” X 6” (50.8mm X 152.4mm) cross members spaced no more than 72 inches (1828.8mm) center to center, and as required to align with the threaded rods extending from the anchor bolts in the foundation. The double 2” X 6” (50.8mm X 152.4mm) top plates shall be face nailed with 16d nails staggered at 16 inches (406.4mm) on center, with laps and intersections face nailed with four 16d nails. The cross members shall be face nailed to the top plates with four 16d nails at each end. Corner connections shall include overlaps nailed as above or an acceptable equivalent such as plywood gussets

DRAFT

or metal plates. Alternatives to this roof bearing assembly option must provide equal or greater vertical rigidity and provide horizontal rigidity equivalent to a continuous double 2" X 4" (50.8mm X 101.6mm) top plate.

The connection of roof framing members to the roof bearing assembly shall comply with the appropriate sections of the *International Residential Code* or *International Building Code*.

Section 105.7.7 Openings and Lintels. All openings in load bearing bale walls shall be a minimum of one full bale length from any outside corner, unless exceptions are designed by an Arizona Registrant.

Section 105.7.7.1 Openings. Openings in exterior bale walls shall not exceed 50 percent of the total wall area, based on interior dimensions, where the wall is providing resistance to lateral loads, unless the structure is designed by an Arizona Registrant.

Section 105.7.7.2 Lintels. Wall and/or roof load present above any opening shall be carried, or transferred to the bales below by one of the following:

1. A structural frame,
2. A lintel (such as an angle-iron cradle, wooden beam, wooden box beam). Lintels shall be at least twice as long as the opening is wide and extend at least 24" (609.6mm) beyond either side of the opening. Lintels shall be centered over openings, and shall not exceed the load limitations of Section 105.5 by more than 25 percent.

Section 105.7.8 Moisture Protection. All weather-exposed bale walls shall be protected from water damage. An approved building moisture barrier shall be used to protect at least the bottom course of bales, but not more than the lower one-third of the vertical exterior wall surface, in order to allow natural transpiration of moisture from the bales. The moisture barrier shall have its upper edge inserted at least 6 inches (152.4mm) into the horizontal joint between two courses of bales, and shall extend at least 3 inches (76.2mm) below the top of the foundation. Bale walls shall have special moisture protection provided at all window sills. Unless protected by a roof, the tops of walls shall also be protected. This moisture protection shall consist of a waterproof membrane, such as asphalt-impregnated felt paper, polyethylene sheeting, or other acceptable moisture barrier, installed in such manner as to prevent water from entering the wall system at window sills or at the tops of walls.

Section 105.7.9 Wall Finishes. Interior and exterior surfaces of bale walls shall be protected from mechanical damage, flame, animals, and prolonged exposure to water. Bale walls adjacent to bath and shower enclosures shall be protected by a moisture barrier.

Cement stucco shall be reinforced with galvanized woven wire stucco netting or an acceptable equivalent. Such reinforcement shall be secured by attachment through the wall at a maximum spacing of 24 inches (609.6mm) horizontally and 16 inches (406.4mm) vertically.

Where bales abut other materials, the plaster/stucco shall be reinforced with galvanized expanded metal lath, or an acceptable equivalent, extending a minimum of 6 inches (152.4mm) onto the bales.

Earthen and lime-based plasters may be applied directly onto the exterior and interior surface of bale walls without reinforcement, except where applied over materials other than straw. Weather-exposed earthen plasters shall be stabilized.

DRAFT

Lime based plasters may be applied directly onto the exterior surface of bale walls without reinforcement, except where applied over materials other than straw.

Section 105.7.10 Electrical. Type NM or UF cable may be used, or wiring may be run in metallic or nonmetallic conduit systems. Electrical boxes shall be securely attached to wooden stakes driven a minimum of 12 inches into the bales, or an acceptable equivalent.

Section 105.7.11 Plumbing. Water or gas pipes within bale walls shall be encased in a continuous pipe sleeve to prevent leakage within the wall. Where pipes are mounted on bale walls, they shall be isolated from the bales by a moisture barrier.

Section 106 Patio/Landscape Walls

Section 106.1 General. This section covers freestanding or attached bale privacy or landscape walls, not exceeding 6 feet (1828.8mm) in height, from final grade to top of wall. Bales may be stacked either flat or on- edge. Alternate methods, other than those listed in this section, may be approved by the building official.

Section 106.2 Foundations. The minimum foundation shall consist of an 8 inch thick reinforced concrete stem wall, over an approved footing. Minimum width of the stem wall shall be equal to the width of the bottom bale. Stem walls shall have continuous horizontal reinforcement consisting of two #4 bars with 24 inches (609.6mm) minimum lap at splices.

Section 106.2.1 Reinforcement. Vertical reinforcing bars, a minimum 3/8" (9.53mm) in diameter, shall be placed in the center of the stem wall, two per bale, and extend up a minimum of 24 inches (609.6mm), and be embedded a minimum of 4 inches (101.6mm) into the concrete stem wall. Bales shall be pinned, using two 3/8" (9.53mm) diameter bars per bale, and use pins long enough to provide at least one vertical bar from stem wall to top of wall, with a minimum of one full bale overlap where not continuous.

For the purpose of attaching stucco mesh to the wall, 12d or larger galvanized common double-headed nails shall be embedded in the concrete a minimum of 1 inch (25.4mm) below the top of the stem wall, with the heads embedded a minimum of 2 inches (50.8mm) into the concrete, and the points extending a minimum of 3/4" (19.05mm) from the face of the stem wall, and spaced a minimum of 6" (152.4mm) on center on both sides of the wall.

Section 106.2.2 Moisture Barrier. A moisture barrier shall be used between the top of the stem wall and the first course of bales. A moisture barrier shall also be used to protect the tops of bales at the top of walls, and shall extend 6 inches (152.4mm) down on either side of the wall.

Section 106.2.3 Stucco Mesh. Stucco mesh, 20 gauge or heavier, shall be attached by means of clinching the embedded nails on one side of the wall, stretching a continuous piece of netting tightly over the top of the wall, and fastening the netting in the same manner on the opposite side of the wall.

Section 106.2.4 Wall Finish. Walls shall be finished with cement stucco, or stabilized mud plaster, with a minimum thickness of7/8" (22.23mm).

DRAFT

Maricopa Association of Governments Building Code Amendments and Standards Manual **BCAS #4**	
Title: **Revision to International Residential Code Table R301.2(1)**	MARICOPA ASSOCIATION of GOVERNMENTS **BCAS Manual**
Originally Reviewed by MAG Building Codes Committee: **11/14/2001**	
Updated by MAG Building Codes Committee: **5/15/2013**	

Table R301.2(1), insert the following design criteria:

GROUND SNOW LOAD	0 psf
WIND DESIGN Speed	90 mph Exposure B
WIND DESIGN Topographic effects	NO
SEISMIC DESIGN CATEGORY	B
SUBJECT TO DAMAGE FROM Weathering	NEGLIGIBLE
SUBJECT TO DAMAGE FROM Frost Line Depth	12”
SUBJECT TO DAMAGE FROM Termite	MODERATE TO HEAVY
WINTER DESIGN TEMP	34 degrees F
ICE BARRIER UNDERLAYMENT REQUIRED	NO
FLOOD HAZARDS	National Flood Insurance Program 040049”
AIR FREEZING INDEX	0
MEAN ANNUAL TEMP	71.2 degrees F

In footnotes i and j delete “www.ncdc.noaa.gov/fpsf.html” and replace with www.ncdc.noaa.gov/oa/fpsf/AFI-pubreturn.pdf

DRAFT

Maricopa Association of Governments Building Code Amendments and Standards Manual **BCAS #5**	
Title: **Sample Agreement to Relocate a Gas Line without a Permit**	MARICOPA ASSOCIATION of GOVERNMENTS **BCAS Manual**
Originally Reviewed by MAG Building Codes Committee: **2/20/2002**	
Updated by MAG Building Codes Committee: **11/14/2012**	

To: Southwest Gas Corporation
From: _____ (Town, City or County Name)
Date: _____
Subject: House-line permitting and inspections

The _____ (Town, City or County) of _____ (Name) agrees to allow Southwest Gas Corporation and/or its contractors to extend above ground, external house-lines up to a maximum of twenty feet (20', one length of pipe with no elbows or couplings) without the need of permits or inspections - when conditions make it necessary to relocate company facilities. Southwest Gas Corporation or its contractors will not alter or make repairs to any other portion of the existing house-line without first obtaining a permit and inspection. A meter clock test or drop test will be performed on the customer's house-line and liquid leak detector (soap) will be used on all visible connections.

Southwest Gas Corporation will extend house-lines up to a maximum of twenty feet (20', one length of pipe with no elbows or couplings), without permits and inspections, only when the company generates the need. When the customer generates the need, Southwest Gas Corporation will follow the normal permitting and inspection process.

DRAFT

Maricopa Association of Governments Building Code Amendments and Standards Manual **BCAS #6**	
Title: **Permit Submittal Requirements for Residential Solar Domestic Hot Water Systems**	MARICOPA ASSOCIATION of GOVERNMENTS **BCAS Manual**
Originally Reviewed by MAG Building Codes Committee: **4/16/2003**	
Updated by MAG Building Codes Committee: **5/16/2012**	

This standard sets forth submittal requirements for securing the necessary plumbing/building permits for single-family residential Solar Domestic Hot Water systems.

1. The location of the solar panel system shall be indicated on the plans, including roof plan, elevation and mounting details for panel installation.
2. Structural analysis shall be required and/or on file for systems with water storage on roof (e. g. – integrated collector storage systems or thermosyphon systems).
3. Systems structural engineering analysis shall not be required for flat plate collectors whose weight does not exceed 20 lbs per square foot on roof slopes of 4/12 or less and 16 lbs per square foot on roof slopes greater than 4/12.
4. Standard plans (where permitted by local jurisdiction) shall be on file, including Solar Rating and Certification Corporation (SRCC) System Data (specification sheet).
5. Note on plans that Solar Domestic Water Heating equipment shall be installed in accordance with applicable plumbing codes and in accordance with SRCC and State of Arizona Guidelines.
6. Replacement of Solar Domestic Water Heating systems shall be treated the same as a water heater replacement.

<u>NOTE</u>:
Local planning and zoning regulations involving such requirements as setback, height limitations, color, reflectivity or other design considerations, may apply. See the local governing jurisdiction for further information.

DRAFT

Maricopa Association of Governments Building Code Amendments and Standards Manual **BCAS #7**	
Title: **Uniform Application for Fireblocking per Section 302.11 of the 2012 International Residential Code (IRC)**	MARICOPA ASSOCIATION of GOVERNMENTS **BCAS Manual**
Originally Reviewed by MAG Building Codes Committee: **5/21/2003**	
Updated by MAG Building Codes Committee: **6/20/2012**	

2012 IRC Section 302.11 states: "**Fireblocking.** In combustible construction, fireblocking shall be provided to cut off all concealed draft openings (both vertical and horizontal) and to form an effective fire barrier between stories, and between a top *story* and the roof space.
Fireblocking shall be provided in wood-frame construction in the following locations:

1. In concealed spaces of stud walls and partitions, including furred spaces and parallel rows of studs or staggered studs, as follows:
   1.1 Vertically at the ceiling and floor levels.
   1.2 Horizontally at intervals not exceeding 10 feet (3048 mm).
2. At all interconnections between concealed vertical and horizontal spaces such as occur at soffits, drop ceilings and cove ceilings.
3. In concealed spaces between stair stringers at the top and bottom of the run. Enclosed spaces under stairs shall comply with Section R302.7.
4. At openings around vents, pipes, ducts, cables and wires at ceiling and floor level, with an *approved* material to resist the free passage of flame and products of combustion. The material filling this annular space shall not be required to meet the ASTM E 136 requirements.
5. For the fireblocking of chimneys and fireplaces, see Section R1003.19.
6. Fireblocking of cornices of a two-family *dwelling* is required at the line of *dwelling unit* separation."

2012 IRC Section 302.11.1 states, "**Fireblocking materials.** Except as provided in Section R302.11, Item 4, fireblocking shall consist of the following materials:

1. Two-inch (51 mm) nominal lumber.
2. Two thicknesses of 1-inch (25.4 mm) nominal lumber with broken lap joints.
3. One thickness of 23/32-inch (18.3 mm) wood structural panels with joints backed by 23/32-inch (18.3 mm) wood structural panels.
4. One thickness of 3/4-inch (19.1 mm) particleboard with joints backed by 3/4-inch (19.1 mm) particleboard.
5. One-half-inch (12.7 mm) gypsum board.
6. One-quarter-inch (6.4 mm) cement-based millboard.
7. Batts or blankets of mineral wool or glass fiber or other *approved* materials installed in such a manner as to be securely retained in place.
8. Cellulose insulation installed as tested for the specific application."

DRAFT

2012 IRC Section 302.11.2 states, "**Fireblocking integrity.** The integrity of all fireblocks shall be maintained."

Analysis of discussion and recommendation

Based on the fact that foam products which are not tested to comply with ASTM E814 or ANSI/UL 1479 are not approved fire block material, the MAG Building Codes Committee consensus is to not allow the use of foam products that are not listed as such to maintain the fireblocking integrity required in the 2012 IRC Section 302.11.2.

DRAFT

Maricopa Association of Governments Building Code Amendments and Standards Manual **BCAS #8**	
Title: **Recommendations from the Phoenix Residential Post-Tension Round Table Committee**	MARICOPA ASSOCIATION of GOVERNMENTS **BCAS Manual**
Originally Reviewed by MAG Building Codes Committee: **10/14/2003**	
Updated by MAG Building Codes Committee: **6/20/2012**	

Prepared by: **Phoenix Residential Post-Tension Round Table Committee**

This document has been prepared by the Phoenix Residential Post-Tension Round Table Committee as a supplement to the Construction and Maintenance Procedures Manual, 2nd Edition, issued by the Post-Tensioning Institute. This document is intended as a recommended general guide for the design, placement, installation, inspection and maintenance of residential post-tensioned slabs-on-ground in the Phoenix area. The purpose of this document is to address the unique characteristics of residential post-tensioned slabs-on-ground in the Phoenix area.

Recommendations for All Stakeholders

1. Construction shall be performed in conformance with the approved plans and specifications.
2. Any deviation from plans and specification shall require the Engineer's written approval.
3. Any repairs shall require the Engineer's written approval.
4. Engineer shall be notified prior to any slab cutting.
5. Concrete cutting and removal should only be performed by a qualified concrete contractor or post-tension contractor.

Recommendations for the Concrete Contractor

1. Concrete shall be placed monolithically across the entire slab area to be post-tensioned.
2. Cold joints at the garage tire stop, garage stem walls or any other location are unacceptable without the approval of the Engineer of Record. Warm joints (still plastic) shall be squared off prior to subsequent pour.
3. The use of a vibrator or other means of concrete consolidation is critical during the placement of the concrete, especially around the stressing and fixed end anchorage zones. This process eliminates voids in these areas and greatly reduces the possibility of honeycombing, which may lead to concrete blowouts.
4. Tooled control joints may be used, when applicable, to control cracking prior to stressing or for aesthetic reasons. Joint depth shall not exceed 1/5 of slab thickness.
5. A warning stamp that reads "Post-Tension Slab Do Not Cut or Drill" shall be placed in a conspicuous location in the garage.
6. Sub-base shall be compacted to a smooth, level and firm base.

DRAFT

Recommendations for the Post-Tension Contractor

1. Corner bars shall be installed as shown or stated in the Plans.
2. Plumbing boxes shall be reinforced as shown or stated in the Plans.
3. All intersections of slab tendons shall be secured with tie wire *or other means (such as snap chairs)* to prevent displacement during placement of concrete.
4. If wedges are offset more than 1/8 inch, reseat wedges.

Recommendations for the Engineer-of-Record

1. Specify sub-base requirements and choose appropriate coefficient of friction.
2. Identify each tendon by number, with length and elongation range listed.
3. Minimum slab width to receive tendons shall be 10 feet. Any slab width less than 10 feet shall be conventionally reinforced rather than post-tensioned.
4. Perimeter details for equivalent thickness slabs shall show the tendons at mid-depth of the slab and should provide a minimum of 2 inches of concrete cover to the anchor.
5. Backup bars shall be in compliance with the ICBO Report for the specific anchors used in construction.
6. Re-entrant corner bars shall consist of one #5.
7. No reinforcement is required around plumbing pipe penetrations outside of the anchor zone.
8. Reinforcement for plumbing boxes shall be clearly defined.
9. Reinforcement for penetrations in the anchor zone shall be clearly defined.
10. Specify slab thickness tolerance limits.
11. Options should be clearly described and labeled.
12. Vertical concentrated loads associated with holdowns and/or posts shall be addressed in the post-tension slab design.
13. When the post-tension slab is designed by an engineer other than the Engineer-of-Record for the superstructure, the Engineer-of-Record shall review the slab design for conformance with the design of the superstructure.
14. GENERAL NOTES shall include the following:
    a. Reference to “Construction and Maintenance Procedures Manual for Post-Tensioned.
    b. Slab-on-Ground Construction”, 2nd Edition, by the Post-Tensioning Institute.
    c. Maximum plumbing box size shall be 12” x 12”, located a minimum of 6” from any edge.
    d. Plumbing shall be boxed and wrapped prior to post-tension installation.
    e. Slabs shall be formed and poured as monolithic slabs. If a cold joint occurs within a slab, contact Engineer of Record prior to proceeding with subsequent pour.
    f. Slabs shall be stressed prior to roof tile stocking.

Recommendations for the Special Inspector

1. Inspections shall be done under the direct supervision of an individual who has PTI certification.
2. Inspectors are required to be at stressing of slab.

Recommendations for the Home Builder

1. The condition of the building pad should meet the requirements of the geotechnical report prior to the start of foundation construction.

DRAFT

2. Pumping concrete is recommended to reduce tendon displacement, sub-base disruption and vehicular traffic on building pads.
3. Engineer of Record shall be notified who will be performing the Special Inspections.
4. Proper grading/slopes shall be installed on all sides of the home after the slab is poured. Proper grading/slopes shall be maintained through the course of construction and for the life of the structure.
5. The main water shut off valve shall have a tag of durable, non-corrosive metal, permanently attached identifying the building as having a post-tensioned slab.

Recommendations for the Municipal Plan Review

1. Identify each tendon by number, with length and elongation range listed.
2. All intersections of slab tendons shall be secured with tie wire or other means (such as snap chairs) to prevent displacement during placement of concrete.
3. Reinforcement for plumbing boxes shall be clearly defined.
4. Reinforcement for penetrations in the anchor zone shall be clearly defined.

DRAFT

Maricopa Association of Governments Building Code Amendments and Standards Manual **BCAS #9**	
Title: **Uniform Requirement of Pad Certification per Section R401.2 of the 2012 International Residential Code (IRC)**	MARICOPA ASSOCIATION of GOVERNMENTS **BCAS Manual**
Originally Reviewed by MAG Building Codes Committee: **12/16/2004**	
Updated by MAG Building Codes Committee: **11/14/2012**	

The requirements of the 2012 IRC Section R401.2, states "Fill soils that support footings and foundations shall be designed, installed and tested in accordance with accepted engineering practice."

Upon completion of the soils investigation, the testing agency may include an expiration date for pad certifications.

As local jurisdictions are unable to verify if the original pad certification is still current, each builder shall provide a current pad certification for all single-family lots in tract subdivisions at the time of the footing inspection.

DRAFT

Maricopa Association of Governments Building Code Amendments and Standards Manual **BCAS #10**	
Title: **Uniform Requirement of Weep Screed per Section R703.6.2.1 of the 2012 International Residential Code (IRC)**	MARICOPA ASSOCIATION of GOVERNMENTS **BCAS Manual**
Originally Reviewed by MAG Building Codes Committee: **12/16/2004**	
Updated by MAG Building Codes Committee: **11/14/2012**	

The requirements of the 2012 IRC Section R703.6.2.1, states "The weep screed shall be placed a minimum of 4 inches (102mm) above the earth or 2 inches (51 mm) above paved areas and shall be of a type that will allow trapped water to drain to the exterior of the building."

The clearance required above the paved areas cannot be maintained when the Builder provides a no step entry.

It is the purpose of this code section to allow excess moisture inside the wall to drain to the exterior of the building. As an alternate method, the installation of a deco drain directly below the weep screed meets this requirement.

DRAFT

Maricopa Association of Governments Building Code Amendments and Standards Manual BCAS #11	
Title: **Service Entry Section (SES) Installation Practices**	MARICOPA ASSOCIATION of GOVERNMENTS **BCAS Manual**
Originally Reviewed by MAG Building Codes Committee: **11/19/2005**	
Updated by MAG Building Codes Committee: **6/20/2012**	

DRAFT

Background

In 2005, Sections 312.5 and 314.17 of the 2002 National Electrical Code (NEC) and sections E3807.7 and E3806.1.1 of the 2003 International Residential Code (IRC) addressed cabinets, boxes and conduit bodies and the entry of said cabinets, boxes and conduit bodies by cables and conduit (*NOTE: the current code sections are 312.5 and 314.17 of the 2011 NEC and E3907.7 and E3906.1.1 of the 2012 IRC*). These sections required the enclosure of openings through which cables enter a cabinet, box or conduit body, required that nonmetallic cables be permitted to enter the top of a surface-mounted enclosure only and that the nonmetallic cable be protected at points of entry into a cabinet, box or conduit body from damage and abrasion, where cables are used, each cable be secured to the cabinet, cutout box or meter socket enclosure. At the time of original review by the Committee, these requirements had been largely ignored by installers and enforcers in the State of Arizona.

A code change proposal was submitted to the Code Making Panel of National Fire Protection Association (NFPA) to validate the method of installation traditionally occurring in this region. That code change proposal, 9-12 Log #463, was rejected by the Code Making Panel.

The Committee believed that the immediate and strict adherence to and enforcement of in their entirety these sections would pose a change in standard practice in this region and both industry and the enforcement community would benefit from a “phase-in” or transition period.

The Committee recommended that the abovementioned sections be enforced in their entirety so that each cable would be secured to the cabinet, cutout box or meter socket enclosure where it enters. This recommendation had an effective date of December 1, 2005.

Exhibit A

Reference the 2011 National Electrical Code and replace the first paragraph with the following (The remainder of Section 312.5 to remain the same)

312.5 Cabinets, Cutout Boxes, and Meter Socket Enclosures. Conductors entering enclosures within the scope of this article shall be protected from abrasion and shall comply with 312.5(A) through (C).

Exception: For one- and two-family dwellings, cables with entirely nonmetallic sheaths shall be permitted to enter the back of a surface-mounted enclosure through one or more nonflexible raceways not more than 75 mm (3 in.) in diameter, and not less than 75 mm (3 in.) and not more than 600 mm (24 in.) in length, provided all of the following conditions are met:

A. Each cable is fastened within 200 mm (8 in.), measured along the sheath of the outer end of the raceway.
B. The raceway extends directly into an enclosed wall space.
C. A fitting is provided on each end of the raceway to protect the cable(s) from abrasion.
D. The raceway is sealed or plugged using approved means so as to prevent access to the enclosure through the raceway.
E. The cable sheath is continuous through the raceway and extends into the enclosure beyond the fitting not less than 50 mm (2 in.).
F. The raceway, if greater than 305 mm (12 in.) is fastened at its outer end in accordance with the applicable article.
G. The raceway shall be permitted to be filled to 60 percent of its total cross sectional area, and 310.15(B)3 adjustment factors need not apply to this condition.

DRAFT

Maricopa Association of Governments Building Code Amendments and Standards Manual **BCAS #12**	
Title: **Storage Space Lighting**	MARICOPA ASSOCIATION of GOVERNMENTS **BCAS Manual**
Originally Reviewed by MAG Building Codes Committee: **6/21/2006**	
Updated by MAG Building Codes Committee: **11/14/2012**	

The storage or equipment spaces that are located underfloor or in attics would require lighting fixtures and shall be installed based on section E3903.4 of the 2012 International Residential Code (IRC). Some MAG jurisdictions have interpreted that under-stair spaces are to be considered as “underfloor” spaces and have required the installation of luminaires in such locations. The Committee has determined that the intent of the code is to require luminaires in storage spaces that are truly underfloor, namely crawl spaces only.

The Committee recommends that storage space located under stairs not be considered as underfloor spaces requiring lighting for the sake of consistency throughout Maricopa County.

The original effective date of this recommendation was July 1, 2006.

DRAFT

Maricopa Association of Governments Building Code Amendments and Standards Manual **BCAS #13**	
Title: **City of Phoenix Approved Steel Fabricators Program**	MARICOPA ASSOCIATION of GOVERNMENTS **BCAS Manual**
Originally Reviewed by MAG Building Codes Committee: **6/21/2006**	
Updated by MAG Building Codes Committee: **6/20/2012**	

The Uniform Building Code and International Building Code require special inspection for structural steel, subject to the requirements and alternatives established by the codes. These codes do not require the special inspections on shop-fabricated portions of structural steel if these items subject to special inspection are fabricated on the premises of an "approved" fabrication shop. The City of Phoenix administers a program that generates and maintains a list of approved steel fabricators that meet some or all of the following approvals: the American Institute of Steel Construction (AISC); City of Los Angeles, California; Clark County, Nevada; International Code Council (ICC); International Accreditation Service (IAS); or some other authority approved by the City of Phoenix. The City of Phoenix Approved Steel Fabricators program requires that each and every fabricated piece of steel shall be identified to indicate the shop of origin.

The Committee recommends that member jurisdictions recognize and accept the City of Phoenix Approved Structural Steel Fabricators program and list as meeting the special structural inspections alternatives for structural steel fabricated by an approved fabricator as allowed in the building codes.

The original effective date of this recommendation was July 1, 2006.

DRAFT

Maricopa Association of Governments Building Code Amendments and Standards Manual **BCAS #14**	
Title: **2007 Supplement to the International Residential Code**	MARICOPA ASSOCIATION of GOVERNMENTS **BCAS Manual**
Originally Reviewed by MAG Building Codes Committee: **6/18/2008**	
Updated by MAG Building Codes Committee: **6/20/2012**	

At the June 18, 2008, Building Codes Committee meeting, the Committee reviewed a supplement to the 2007 International Residential Code (IRC), which focused on story height and wall bracing requirements. The Committee voted to support the supplement.

At the June 20, 2012 meeting, the Committee noted that this supplement was incorporated into the 2009 IRC. The Committee also noted that a majority of jurisdictions were using codes older than 2009, and this supplement is still relevant to those jurisdictions.

DRAFT

CHAPTER 6
WALL CONSTRUCTION

Table R602.3(1) Change table and footnote h to read as shown: (RB170-06/07; S72-06/07 Part II, S75-06/07 Part II)

TABLE R602.3(1)
FASTENER SCHEDULE STRUCTURAL MEMBERS

DESCRIPTION OF BUILDING MATERIALS	DESCRIPTION OF FASTENER[b, c,e]	SPACING OF FASTENERS	
		Edges (Inches)	[i]Intermediate supports[c,e] (inches)
Wood structural panels, subfloor, roof and wall sheathing to framing, and particleboard wall sheathing to framing			
3/8" - 1/2□	6d common (2□ × 0.113□) nail (subfloor wall) 8d common (21/2□ × 0.131□) nail (roof)	6	12[g]
Other wall sheathing[h]			
1/2" structural cellulosic fiberboard sheathing	1 1/2" galvanized roofing nail, 7/16" crown or 1" crown staple 16 ga., 1 1/4" long	3	6
25/32" structural cellulosic fiberboard sheathing	1 3/4" galvanized roofing nail, 7/16" crown or 1" crown staple 16 ga., 1 1/2" long	3	6
1/2" gypsum sheathing[d]	1½" galvanized roofing nail; staple galvanized, 1 ½" long; 1 ¼" screws, Type W or S	4	8
5/8" gypsum sheathing[d]	1 3/4" galvanized roofing nail; staple galvanized, 1 5/8" long; 1 5/8" screws, Type W or S	4	8

For SI: 1 inch = 25.4 mm, 1 foot = 304.8 mm, 1 mile per hour = 0.447 m/s; 1ksi = 6.895 MPa.

h. Gypsum sheathing shall conform to ASTM C 1396 and shall be installed in accordance with GA 253. Fiberboard sheathing shall conform to ASTM C 208.

(Portions of table and footnotes not shown remain unchanged)

Table R602.3(3) Change table to read as shown: (S72-06/07 Part II)

TABLE R602.3(3)
WOOD STRUCTURAL PANEL WALL SHEATHING

Panel Span Rating	Panel Nominal Thickness (inch)	Maximum Stud Spacing (inches)	
		Siding nailed to:[a]	
		Stud	Sheathing
16/0, 20/0, or wall – 16 o.c.	3/8	16	16[b]
24/0, 24/16, 32/16 or wall – 24 o.c.	3/8, 7/10, 15/32, 1/2	24	24[c]

For SI: 1 inch = 25.4 mm.
a. Blocking of horizontal joints shall not be required.
b. Plywood sheathing 3/8-inch thick or less shall be applied with long dimension across studs.
c. Three-ply plywood panels shall be applied with long dimension across studs.

Section R602.6.1 Change to read as shown: (RB172-06/07)

R602.6.1 Drilling and notching of top plate. When piping or ductwork is placed in or partly in an exterior wall or interior load-bearing wall, necessitating cutting, drilling or notching of the top plate by more than 50 percent of its width, a galvanized metal tie of not less than 0.054 inch thick (1.37 mm) (16 ga) and 1 1/2 inches (38 mm) wide shall be fastened across and to the plate at each side of the opening with not less than eight 10d (0.148 inch diameter) nails having a minimum length of 1 1/2 inches (38 mm) nails at each side or equivalent. The metal tie must extend a minimum of 6 inches past the opening. See Figure R602.6.1.

Exception: When the entire side of the wall with the notch or cut is covered by wood structural panel sheathing.

DRAFT

Section R602.8 Change to read as shown: (RB176-06/07)

R602.8 Fireblocking required. Fireblocking shall be provided to cut off all concealed draft openings (both vertical and horizontal) and to form an effective fire barrier between stories, and between a top story and the roof space. Fireblocking shall be provided in wood-frame construction in the following locations.

1. In concealed spaces of stud walls and partitions, including furred spaces and parallel rows of studs or staggered studs; as follows:
   1.1. Vertically at the ceiling and floor levels.
   1.2. Horizontally at intervals not exceeding 10 feet(3048 mm).
2. At all interconnections between concealed vertical and horizontal spaces such as occur at soffits, drop ceilings and cove ceilings.
3. In concealed spaces between stair stringers at the top and bottom of the run. Enclosed spaces under stairs shall comply with Section R311.2.2.
4. At openings around vents, pipes, ducts, cables and wires at ceiling and floor level, with an approved material to resist the free passage of flame and products of combustion. The material filling this annular space shall not be required to meet the ASTM E 136 requirements.
5. For the fireblocking of chimneys and fireplaces, see SectionR1003.19.
6. Fireblocking of cornices of a two-family dwelling is required at the line of dwelling unit separation.

Sections R602.8.1 Change to read as shown: (FS146-06/07 Part II)

R602.8.1 Fireblocking materials. Except as provided in Section R602.8, Item 4, fireblocking shall consist of the following materials:

1. 2-inch (51 mm) nominal lumber.
2. Two thicknesses of 1-inch (25.4 mm) nominal lumber with broken lap joints.
3. One thickness of 23/32-inch (18.3 mm) wood structural panels with joints backed by 23/32-inch (18.3 mm) wood structural panels.
4. One thickness of 3/4-inch (19.1 mm) particleboard with joints backed by 3/4-inch (19.1 mm) particleboard.
5. 1/2-inch (12.7 mm) gypsum board.
6. 1/4-inch (6.4 mm) cement-based millboard.
7. Batts or blankets of mineral wool or glass fiber or other approved materials installed in such a manner as to be securely retained in place.

Section R602.8.1.1 Add new section to read as shown: (FS146-06/07 Part II)

R602.8.1.1 Batts or blankets of mineral or glass fiber. Batts or blankets of mineral or glass fiber or other approved nonrigid materials shall be permitted for compliance with the 10-foot (3048 mm) horizontal fireblocking in walls constructed using parallel rows of studs or staggered studs.

(Renumber subsequent sections)

Section R602.8.1.3 Add new section to read as shown: (FS146-06/07 Part II)

R602.8.1.3 Loose-fill insulation material. Loose-fill insulation material shall not be used as a fireblock unless specifically tested in the form and manner intended for use to demonstrate its ability to remain in place and to retard the spread of fire and hot gases.

(Renumber subsequent sections)

Sections R602.10, R602.11; Change to read as shown: (RB179-06/07, RB181-06/07, RB187-06/07, RB196-06/07, RB197-06/07, RB199-06/07, RB200-06/07, RB201-06/07, RB205-06/07, RB207-06/07, RB209-06/07, RB211-06/07, RB213-06/07, RB214-06/07, RB217-06/07, RB220-06/07, RB223-06/07, RB225-06/07, RB227-06/07, RB231-06/07, RB236-06/07, S72-06/07 Part II, S90-06/07 Part II)

(NOTE: The content of Sections R602.10 and R602.11 has been completely revised and reorganized. The text, tables and figures shown in this supplement replace the 2006 code text in its entirety.)

R602.10 Wall bracing. All exterior walls shall be braced in accordance with this section. In addition, interior braced wall lines shall be provided in accordance with Section R602.10.1. Where a building, or portion thereof, does not comply with one or more of the bracing requirements in this section, those portions shall be designed and constructed in accordance with accepted engineering practice.

DRAFT

Exception: Detached one-and two-family dwellings located in Seismic Design Category C are exempt from the seismic bracing requirements of this section. Wind speed provisions for bracing shall be applicable to detached one- and two-family dwellings.

R602.10.1 Braced wall lines. Braced wall lines, both interior and exterior, shall be provided with braced wall panels in the percentage and location specified in this section.

Braced wall panels shall be in accordance with one of the bracing methods specified in Section R602.10.2, the alternate braced wall method of Section R602.10.3.2, or the continuous structural panel sheathing method of Section R602.10.4. Bracing method shall be permitted to vary as follows:

1. Variation in bracing method from story to story is permitted.
2. Variation in bracing method from braced wall line to braced wall line within a story is permitted, except that continuous structural panel sheathing shall conform to the additional requirements of Section R602.10.4.
3. In Seismic Design Categories A and B, and detached dwellings in Seismic Design Category C, variation in bracing method within a braced wall line is permitted. The required sheathing percentage for the braced wall line with mixed sheathing types shall have the higher bracing percentage, in accordance with Table R602.10.1(1), of all types of bracing used. Wall lines using continuous wood structural panel sheathing shall conform to the additional requirements of Section R602.10.4.

R602.10.1.1 Percentage of bracing. The percentage of bracing along each braced wall line shall be in accordance with Table R602.10.1(1) and shall be the greater of that required by the Seismic Design Category or the design wind speed. Adjustments to the percent of braced wall specified in Table R602.10.1(1) shall be as specified in Table R602.10.1(2)

Section R602.10.1.2 Add new section to read as shown: (RB187-06/07)

R602.10.1.2 Angled corners. At corners, braced wall lines shall be permitted to angle out of plane up to 45 degrees with a maximum diagonal length of 8 feet (2438 mm). When determining the percentage of bracing, the length of each braced wall line shall be determined as shown in Figure R602.10.1.2. The placement of bracing for the braced wall lines shall begin at the point where the braced wall line, which contains the angled wall adjoins the adjacent braced wall line (Point A as shown in Figure R602.10.1.2). Where an angled corner is constructed at an angle equal to 45 degrees and the diagonal length is no more than 8 feet (2438 mm) in length, the angled wall may be considered as part of either of the adjoining braced wall lines, but not both. Where the diagonal length is greater than 8 feet (2438 mm), it shall be considered its own braced wall line and be braced in accordance with Section R602.10.1 and methods in Section R602.10.2.

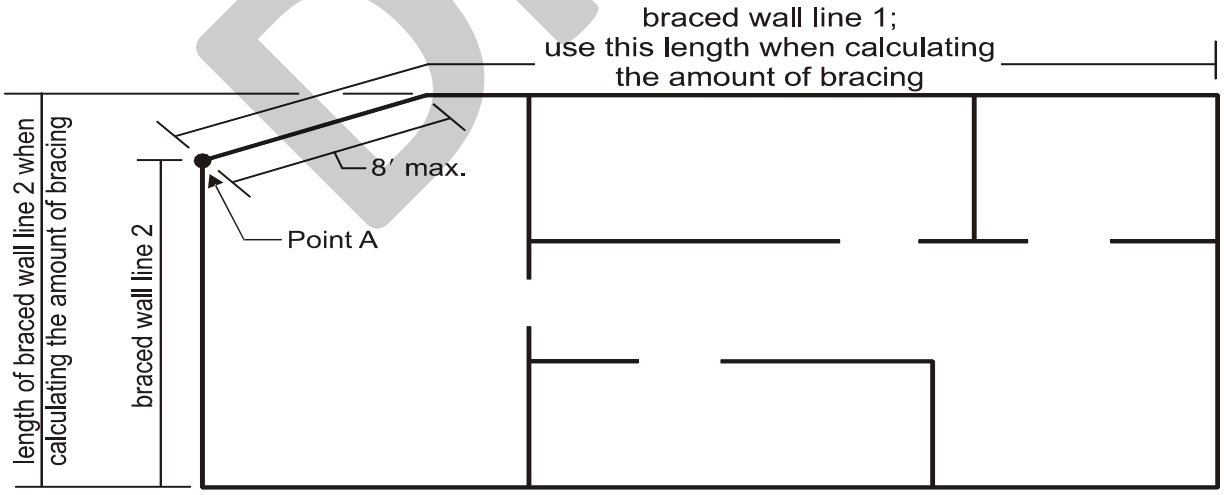

FIGURE R602.10.1.2
ANGLED CORNERS

DRAFT

TABLE R602.10.1(1)[a,b,c]
WALL BRACING

SEISMIC DESIGN CATEGORY (SDC) OR WIND SPEED	STORIES ABOVE BRACED WALL LINE[d]	METHOD OF BRACING PERMITTED	PERCENTAGE OF FULL-HEIGHT BRACING PER WALL LINE		MAXIMUM SPACING BETWEEN BRACED WALL LINES (FT)
			For Method 3 Bracing	For other methods permitted[e]	
SDC A and B (S_s 0.35g and S_{ds} 0.33g), . 100 mph	0	Methods 1-8	16%	16%	35 (See Section R602.10.1.4 for exceptions)
	1	Methods 1-8	16%	25%	
	2	Methods 2-8	25%	35%	
SDC C (S_s 0.6g and S_{ds} 0.53g), < 110 mph	0	Methods 1-8	16%	25%	
	1	Methods 2-8	30%	45%	
	2	Methods 2-8	45%	60%	
SDC D_0 & D_1 (S_s 1.25g and S_{ds} 0.83g), < 110 mph	0	Methods 2-8	20%	30%	25 (See Section R602.10.1.4.1 for exceptions)
	1	Methods 2-8	45%	60%	
	2	Methods 2-8	60%	85%	
SDC D_2, < 110 mph	0	Methods 2-8	25%	40%	
	1	Methods 2-8	55%	75%	
	Cripple wall	Method 3	75%	Not Permitted	

a. Wall bracing percentages are based on a soil site class "D." Interpolation of bracing percentage between the S_{ds} values associated with the Seismic Design Categories shall be permitted when a site-specific S_{ds} value is determined in accordance with Section 1613.5 of the *International Building Code*.
b. Foundation cripple wall panels shall be braced in accordance with Section R602.10.8.
c. Methods of bracing shall be as described in Section R602.10.2. The alternate braced wall panels described in Section R602.10.3.2 shall also be permitted
d. Stories above braced wall line. 0 = one story or top of two or three story. 1 = first story of two story or second story of three story. 2 = first story of three story.

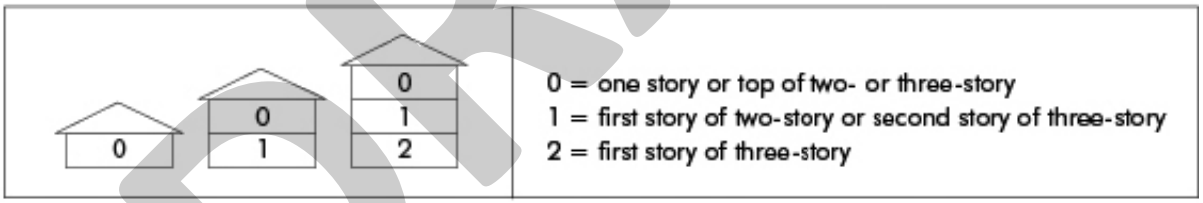

e. Method 1 bracing exempt from percentage bracing requirement.

DRAFT

TABLE R602.10.1(2)
ADJUSTMENT FACTORS TO THE PERCENTAGE OF REQUIRED WALL BRACING [a]

ADJUSTMENT BASED ON:			MULTIPLY PERCENTAGE OF BRACING PER WALL LINE BY:	APPLIES TO:
Story height[b] (Section 301.3)		10 ft	1.0	All bracing methods - R602.10.2
		> 10 12 ft	1.2	
Braced wall line spacing in SDC A-C[b,d]		35 ft	1.0	
		> 35 50 ft	1.43	
Wall dead load[e]		> 8 15	1.0	
		8 psf	0.85	
Roof/ceiling dead load for wall supporting [b,c]:	roof only or roof plus one story	15 psf	1.0	
	roof only	> 15 psf 25 psf	1.1	
	roof plus one story	> 15 psf 25 psf	1.2	
Walls with stone or masonry veneer in SDC C-D_2		See Section R703.7, Exception 1-4		
Cripple walls		See Section R 602.10.8		

a. The total percentage of bracing required for a given wall line is the product of all applicable adjustment factors.
b. Linear interpolation shall be permitted.
c. Bracing required for a site's wind speed shall not be adjusted for dead load.
d. Braced wall line spacing in excess of 35-ft shall be in accordance with R602.10.1.4.
e. The adjusted percentage of bracing shall not be less than that required for the site's wind speed.

R602.10.1.3 Braced wall panel location. Braced wall panels shall be located in accordance with Table R602.10.1(1) and Figure R602.10.1.3(1). Braced wall panels shall be located at least every 25 feet on center and shall begin no more than 12.5 feet (3810 mm) from each end of a braced wall line in accordance with Figure R602.10.1.3(2). Braced wall panels may be offset out-of-plane up to 4 feet (1219 mm) provided that the total out-to-out offset in any braced wall line is not more than 8 feet (2438 mm) in accordance with Figure R602.10.1.3(3).

R602.10.1.3.1 Braced wall panel location in Seismic Design Categories D_0, D_1 and D_2. Exterior braced wall lines shall have a braced wall panel located at each end of the braced wall line.

Exception: For braced wall panel construction Method 3 of Section R602.10.2, the braced wall panel shall be permitted to begin no more than 8 feet (2438 mm) from each end of the braced wall line provided one of the following is satisfied in accordance with Figure R602.10.1.3.1:

1. A minimum 24-inch-wide (610 mm) panel is applied to each side of the building corner and the two 24-inch-wide (610 mm) panels at the corner shall be attached to framing in accordance with Figure R602.10.4.3(1), or
2. The end of each braced wall panel closest to the corner shall have a tie-down device fastened to the stud at the edge of the braced wall panel closest to the corner and to the foundation or framing below. The tie-down device shall be capable of providing an uplift allowable design value of at least 1,800 pounds (8 kN). The tie-down device shall be installed in accordance with the manufacturer's recommendations.

DRAFT

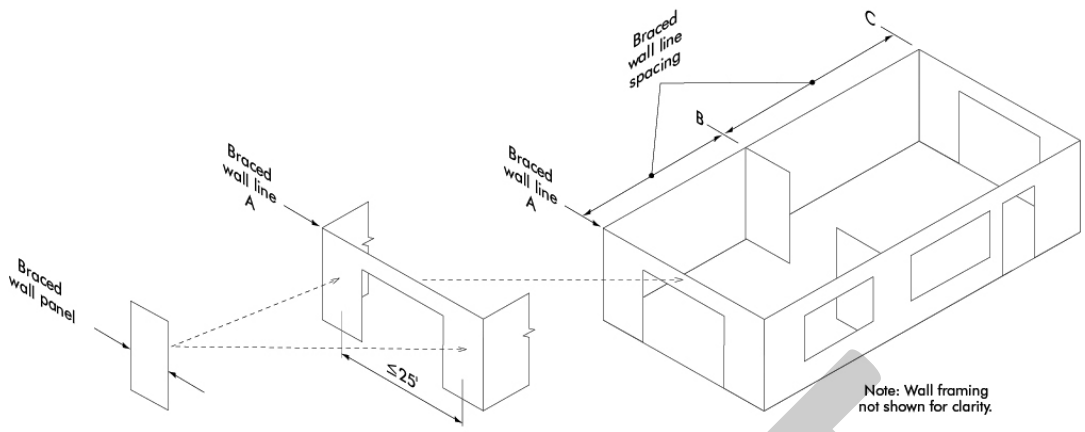

FIGURE R602.10.1.3 (1)
BRACED WALL PANELS AND BRACED WALL LINES

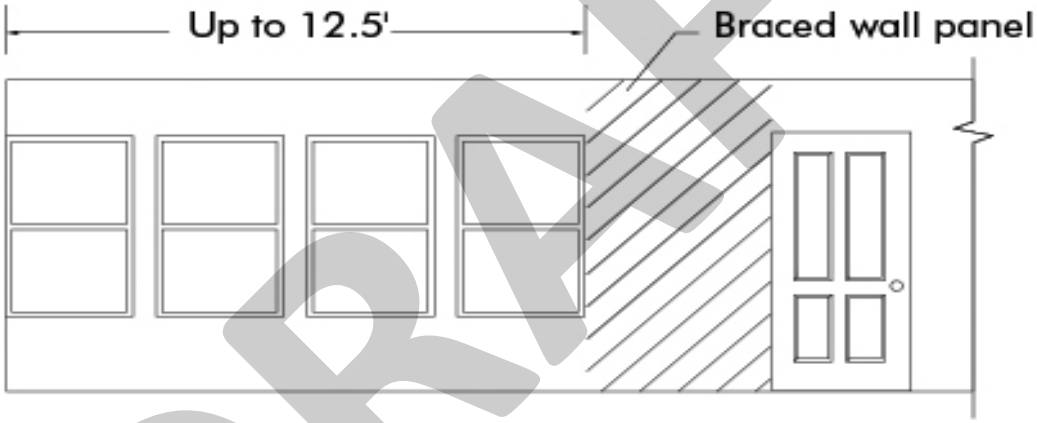

FIGURE R602.10.1.3(2)
PERMITTED BRACED WALL PANEL DISTANCES FROM ENDS OF A BRACED WALL LINE (SDC A, B and C)

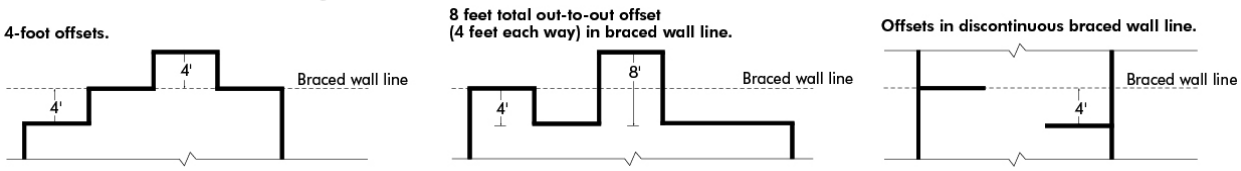

FIGURE R602.10.1.3(3)
OFFSETS PERMITTED FOR BRACED WALL LINES

DRAFT

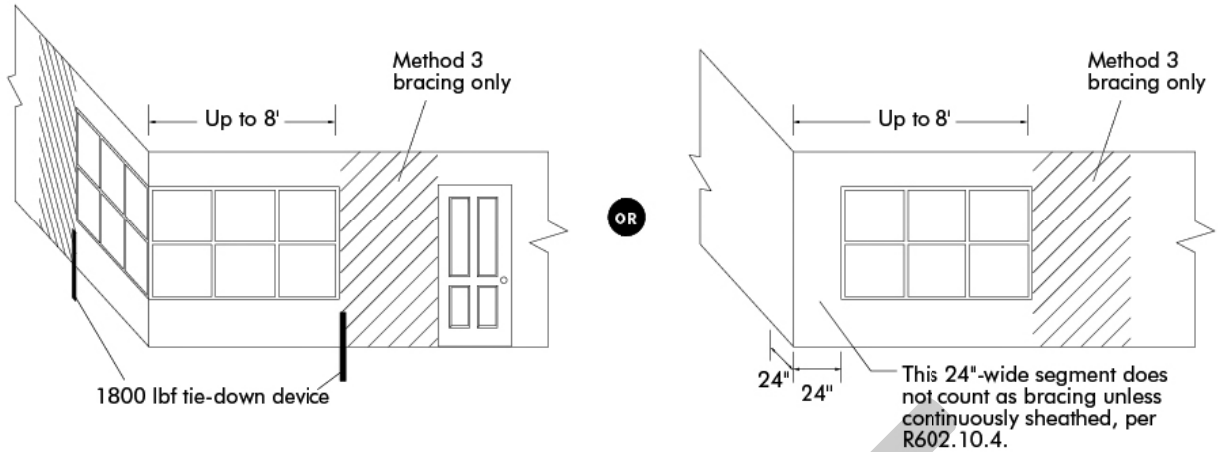

FIGURE R602.10.1.3.1
BRACED WALL PANELS AT BRACED WALL-LINE ENDS IN SEISMIC DESIGN CATEGORIES D_0, D_1 AND D_2

R602.10.1.4 Braced wall line spacing. Spacing of braced wall lines shall not exceed 35 feet (10 668 mm) on center in both the longitudinal and transverse direction in each story.

Exception: Spacing of braced wall lines not exceeding 50 feet (15 240 mm) shall be permitted where:

1. The wall bracing provided equals or exceeds the percentage of bracing required by Table R602.10.1(1) multiplied by a factor equal to the braced wall line spacing divided by 35 feet (10 668 mm), and
2. The length-to-width ratio for the floor/roof diaphragm as measured between braced wall lines does not exceed 3:1.

R602.10.1.4.1 Braced wall line spacing for Seismic Design Categories D_0, D_1 and D_2. Spacing between braced wall lines in each story shall not exceed 25 feet (7620 mm) on center in both the longitudinal and transverse directions.

Exception: In one-and two-story buildings, spacing between two adjacent braced wall lines shall not exceed 35 feet (10 668 mm) on center in order to accommodate one single room not exceeding 900 square feet (84 m^2) in each dwelling unit. Spacing between all other braced wall lines shall not exceed 25 feet (7 620 mm). A spacing of 35 feet (10 668 mm) or less shall be permitted between braced wall lines where the length of wall bracing required by Table R602.10.1(1) is multiplied by the appropriate adjustment factor from Table R602.10.1.4.1, the length-to-width ratio for the floor/roof diaphragm does not exceed 3:1, and the top plate lap splice face nailing shall be twelve 16d nails on each side of the splice.

TABLE R602.10.1.4.1
ADJUSTMENTS OF BRACING PERCENTAGE FOR BRACED WALL LINES GREATER THAN 25 FEET [a,b]

BRACED WALL LINE SPACING (feet)	MULTIPLY BRACING PERCENTAGE IN TABLE R602.10.1(1) BY:
25	1.0
30	1.2
35	1.4

For SI: 1 foot = 304.8 mm

Notes:
a. Linear interpolation is permissible.
b. For an interior braced wall, the adjustment for the larger spacing between braced wall lines shall be used.

R602.10.2 Braced wall panel construction methods. The construction of braced wall panels shall be in accordance with one of the following methods:

DRAFT

1. Nominal 1-inch-by-4-inch (19.1 mm by 88.9 mm) continuous diagonal braces let in to the top and bottom plates and the intervening studs or approved metal strap devices installed in accordance with the manufacturer's specifications. The let-in bracing shall be placed at an angle not more than 60 degrees (1.06 rad) or less than 45 degrees (0.79 rad) from the horizontal.
2. Wood boards of 5/8-inch (15.9 mm) net minimum thickness applied diagonally on studs spaced a maximum of 24 inches (610 mm). Diagonal boards shall be attached to studs in accordance with Table R602.3(1).
3. Wood structural panel sheathing with a thickness not less than 3/8 inch (9.5 mm) for 16-inch (406 mm) or 24-inch (610 mm) stud spacing. Wood Structural panels shall be installed in accordance with Table R602.3(3) and Table R602.3(1).
4. One-half-inch (12.7 mm) or 25/32-inch (19.8 mm) thick structural fiberboard sheathing applied vertically or horizontally on studs spaced a maximum of 16 inches (406 mm) on center. Structural fiberboard sheathing shall be installed in accordance with Table R602.3(1).
5. Gypsum board with minimum ½-inch (12.7 mm) thickness placed on studs spaced a maximum of 24 inches (610 mm) on center and fastened at panel edges including top and bottom plates at 7 inches (178 mm) on center with the size nails specified in Table R602.3(1) for sheathing and Table R702.3.5 for interior gypsum board.
6. Particleboard wall sheathing panels installed in accordance with Table R602.3(4) and Table R602.3(1).
7. Portland cement plaster on studs spaced a maximum of 16 inches (406 mm) on center and installed in accordance with Section R703.6.
8. Hardboard panel siding when installed in accordance with Table R703.4.

Exception: Alternate braced wall panels constructed in accordance with Sections R602.10.3.2.1 or R602.10.3.2.2 shall be permitted to replace any braced wall panel in any of the above methods of braced wall panels.

R602.10.2.1 Braced wall panel interior finish material. Braced wall panels shall have gypsum wall board installed on the side of the wall opposite the bracing material. Gypsum wall board shall be not less than ½ inch (12.7 mm) in thickness and be fastened in accordance with Table R702.3.5 for interior gypsum wall board.

Exceptions:

1. Wall panels that are braced in accordance with Method 5.
2. Wall panels that are braced in accordance with Section R602.10.3.2 .
3. When an approved interior finish material with an in-plane shear resistance equivalent to gypsum board is installed.
4. For Methods 2, 3, 4, 6, 7, and 8, gypsum wall board is permitted to be omitted provided the percentage of bracing in Table R602.10.1(1) is multiplied by a factor of 1.5.

R602.10.2.2 Adhesive attachment of sheathing in Seismic Design Categories C, D_0, D_1 and D_2. Adhesive attachment of wall sheathing shall not be permitted in Seismic Design Categories C, D_0, D_1 and D_2.

R602.10.3 Minimum length of braced panels. For Methods 2, 3, 4, 6, 7 and 8 above, each braced wall panel shall be at least 48 inches (1219 mm) in length, covering a minimum of three stud spaces where studs are spaced 16 inches (406 mm) on center and covering a minimum of two stud spaces where studs are spaced 24 inches (610 mm) on center. For Method 5 above, each braced wall panel and shall be at least 96 inches (2438 mm) in length where applied to one face of a braced wall panel and at least 48 inches (1219 mm) where applied to both faces. For Methods 2, 3, 4, 6, 7 and 8, for purposes of computing the percentage of panel bracing required in Table R602.10.1(1), the effective length of the braced wall panel shall be equal to the actual length of the panel. When Method 5 panels are applied to only one face of a braced wall panel, bracing percentages required in Table R602.10.1(1) for Method 5 shall be doubled.

Exceptions:

1. Lengths of braced wall panels for continuous wood structural panel sheathing shall be in accordance with Section R602.10.4.
2. Lengths of alternate braced wall panels shall be in accordance with Section R602.10.3.2.1 or Section R602.10.3.2.2.
3. For Methods 2, 3, 4, 6, 7 and 8 in Seismic Design Categories A, B, and C: Panels between 36 inches and 48 inches in length shall be permitted to count towards the required percentage of bracing in Table R602.10.1(1), and the effective contribution shall comply with Table R602.10.3.

DRAFT

TABLE R602.10.3
EFFECTIVE LENGTHS FOR BRACE WALL PANELS LESS THAN 48 INCHES IN ACTUAL LENGTH (BRACE METHODS 2, 3, 4, 6, 7, AND 8[a]

Actual Length of Braced Wall Panel (inches)	Effective Length of Braced Wall Panel (inches)		
	8-foot Wall Height	9-foot Wall Height	10-foot Wall Height
48	48	48	48
42	36	36	N/A
36	27	N/A	N/A

For SI: 1 inch = 25.4mm
Interpolation shall be permitted.

R602.10.3.1 Adjustment of length of braced panels. When story height (H), measured in ft, exceeds 10 feet (3048 mm), in accordance with Section R301.3, the minimum length of braced wall panels specified in Section R602.10.3 shall be increased by a factor H/10. See Table R602.10.3.1. Interpolation is permitted.

TABLE R602.10.3.1
MINIMUM LENGTH REQUIREMENTS FOR BRACED WALL PANELS

SEISMIC DESIGN CATEGORY AND WIND SPEED	BRACING METHOD	HEIGHT OF BRACED WALL PANEL				
		8 ft.	9 ft.	10 ft.	11 ft.	12 ft.
SDC A, B, C, D_o, D_1 and D_2 Wind speed < 110 mph	2,3,4,6,7,8 and Method 5 when double sided	4'-0"	4'-0"	4'-0"	4'-5"	4'-10"
	Method 5, single sided	8'-0"	8'-0".	8'-0"	8'-10"	9'-8"

For SI: I inch = 25.4mm, 1 foot = 305 mm

R602.10.3.2 Alternative bracing panels. As an alternate to the bracing methods in Section R602.10.2, wall bracing panels in accordance with Sections R602.10.3.2.1 and R602.10.3.2.2 shall be permitted.

R602.10.3.2.1 Alternate braced wall panels. Alternate braced wall panels constructed in accordance with one of the following provisions shall be permitted to replace each 4 feet (1219 mm) of braced wall panel as required by Section R602.10.3. The maximum height and minimum length and tie-down force of each panel shall be in accordance with Table R602.10.3.2.1:

1. In one-story buildings, each panel shall be sheathed on one face with 3/8-inch-minimum-thickness (9.5 mm) wood structural panel sheathing nailed with 8d common or galvanized box nails spaced in accordance with Table R602.3(1) and blocked at all wood structural panel sheathing edges. Two anchor bolts installed in accordance with Figure R403.1(1) shall be provided in each panel. Anchor bolts shall be placed 6 to 12 inches from each end of the plate. Each panel end stud shall have a tie-down device fastened to the foundation, capable of providing an uplift capacity in accordance with Table R602.10.3.2.1. The tie-down device shall be installed in accordance with the manufacturer's recommendations. The panels shall be supported directly on a foundation or on floor framing supported directly on a foundation, which is continuous across the entire length of the braced wall line. This foundation shall be reinforced with not less than one No. 4 bar top and bottom. When the continuous foundation is required to have a depth greater than 12 inches (305 mm), a minimum 12-inch-by-12-inch (305 mm by 305 mm) continuous footing or turned down slab edge is permitted at door openings in the braced wall line. This continuous footing or turned down slab edge shall be reinforced with not less than one No.4 bar top and bottom. This reinforcement shall be lapped 15 inches (381 mm) with the reinforcement required in the continuous foundation located directly under the braced wall line.
2. In the first story of two-story buildings, each braced wall panel shall be in accordance with Item 1 above, except that the wood structural panel sheathing edge nailing spacing shall not exceed four inches on center.

DRAFT

TABLE R602.10.3.2.1
MINIMUM LENGTH REQUIREMENTS AND TIE-DOWN FORCES FOR ALTERNATE BRACED WALL PANELS

SEISMIC DESIGN CATEGORY AND WIND SPEED		HEIGHT OF BRACED WALL PANEL				
		8 ft.	9 ft.	10 ft.	11 ft.	12 ft.
SDC A, B and C Wind speed < 110 mph	Minimum Sheathed Length	2'-4"	2'-8"	2'-10"	3'-2"	3'-6"
	R602.10.3.2.1, Item 1 Tie-down Force (lbs)	1800	1800	1800	2000	2200
	R602.10.3.2.1, Item 2 Tie-down Force (lbs)	3000	3000	3000	3300	3600
SDC D_o, D_1 and D_2 Wind speed < 110 mph	Minimum Sheathed Length	2'-8"	2'-8"	2'-10"	NP[a]	NP[a]
	R602.10.3.2.1, Item 1 Tie-down Force (lbs)	1800	1800	1800	NP[a]	NP[a]
	R602.10.3.2.1, Item 2 Tie-down Force (lbs)	3000	3000	3000	NP[a]	NP[a]

For SI: 1 inch = 25.4 mm, 1 foot = 305 mm, 1 pound = 4.44822 Newtons
a. NP = Not Permitted. Maximum height of 10 feet (3,048 mm).

R602.10.3.2.2 Alternate bracing wall panel adjacent to a door or window opening. Alternate braced wall panels constructed in accordance with one of the following provisions are also permitted to replace each 4 feet (1219 mm) of braced wall panel as required by Section R602.10.3 for use adjacent to a window or door opening with a full-length header:

1. In one-story buildings, each panel shall have a length of not less than 16 inches (406 mm) and a height of not more than 10 feet (3048 mm). Each panel shall be sheathed on one face with a single layer of 3/8-inch-minimum-thickness (9.5 mm) wood structural panel sheathing nailed with 8d common or galvanized box nails in accordance with Figure R602.10.3.2.2. The wood structural panel sheathing shall extend up over the solid sawn or glued-laminated header and shall be nailed in accordance with Figure R602.10.3.2.2. A built-up header consisting of at least two 2 X 12s and fastened in accordance with Table R602.3(1) shall be permitted to be used. A spacer, if used, shall be placed on the side of the built-up beam opposite the wood structural panel sheathing. The header shall extend between the inside faces of the first full-length outer studs of each panel. The clear span of the header between the inner studs of each panel shall be not less than 6 feet (1829 mm) and not more than 18 feet (5486 mm) in length. A strap with an uplift capacity of not less than 1000 pounds (4448 N) shall fasten the header to the side of the inner studs opposite the sheathing. One anchor bolt not less than 5/8-inch-diameter (16 mm) and installed in accordance with Section R403.1.6 shall be provided in the center of each sill plate. The studs at each end of the panel shall have a tie-down device fastened to the foundation with an uplift capacity of not less than 4,200 pounds (18 683 N). The tie-down devices shall be an embedded-strap type, installed in accordance with the manufacturer's recommendations.

   Where a panel is located on one side of the opening, the header shall extend between the inside face of the first full-length stud of the panel and the bearing studs at the other end of the opening. A strap with an uplift capacity of not less than 1,000 pounds (4448 N) shall fasten the header to the bearing studs. The bearing studs shall also have a tie-down device fastened to the foundation with an uplift capacity of not less than 1,000 pounds (4448 N).

   The panels shall be supported directly on a foundation, which is continuous across the entire length of the braced wall line. The foundation shall be reinforced with not less than one No. 4 bar top and bottom.

   Where the continuous foundation is required to have a depth greater than 12 inches (305 mm), a minimum 12-inch-by-12-inch (305 mm by 305 mm) continuous footing or turned down slab edge is permitted at door openings in the braced wall line. This continuous footing or turned down slab edge shall be reinforced with not less than one No. 4 bar top and bottom. This reinforcement shall be lapped not less than 15 inches (381 mm) with the reinforcement required in the continuous foundation located directly under the braced wall line.
2. In the first story of two-story buildings, each wall panel shall be braced in accordance with item 1 above, except that each panel shall have a length of not less than 24 inches (610 mm).

DRAFT

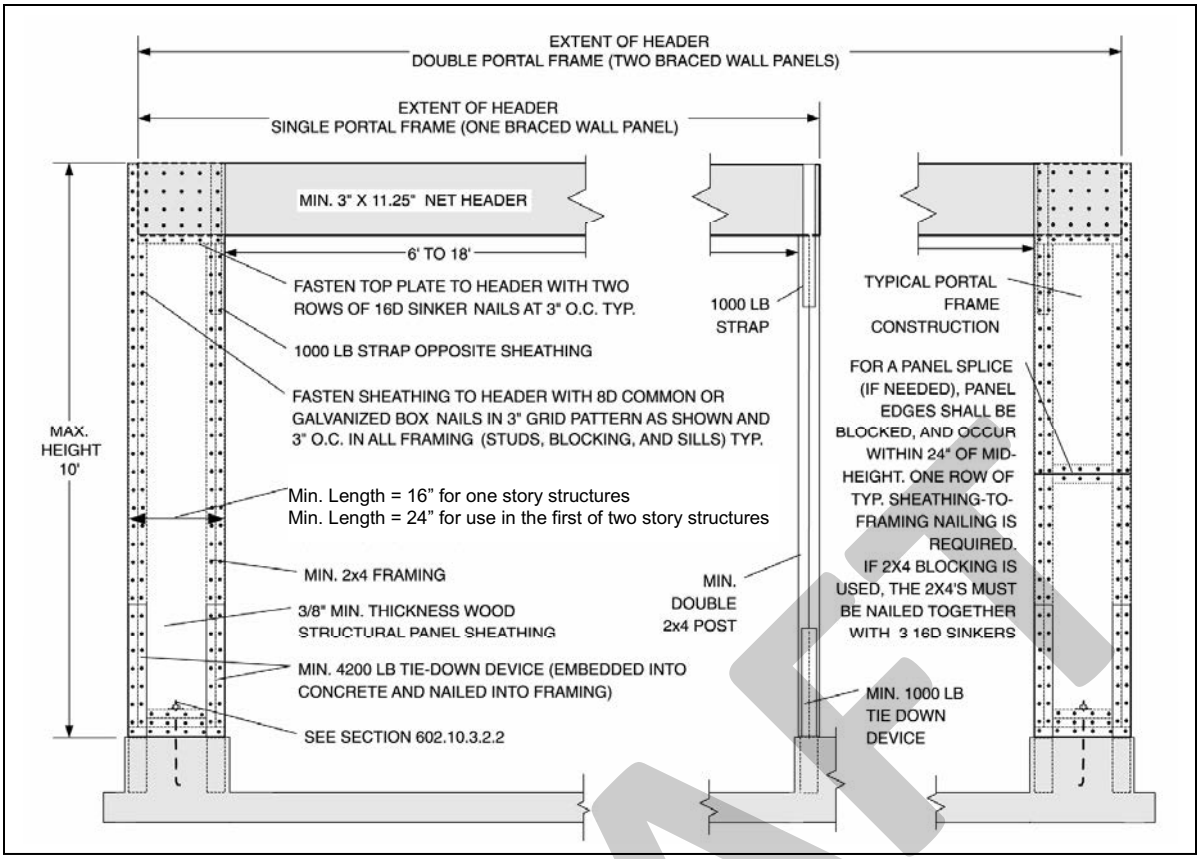

FIGURE R602.10.3.2.2
ALTERNATE BRACED WALL PANEL ADJACENT TO A DOOR OR WINDOW OPENING

For SI: 1 inch = 25.4 mm, 1 foot = 305 mm

R602.10.4 Continuously-sheathed braced wall line using Method 3 (wood structural panel). Continuously sheathed braced wall lines using wood structural panels shall comply with this section. Different bracing methods shall not be permitted within a continuously sheathed braced wall line. Other bracing methods prescribed by this code shall be permitted on other braced wall lines on the same story level or on different story levels of the building.

Exception: All exterior braced wall lines shall be continuously sheathed where required by Section R602.10.4.7.

R602.10.4.1 Continuously-sheathed braced wall line requirements. Continuously-sheathed braced wall line shall be in accordance with Figure R602.10.4(1) and shall comply with all of the following requirements:

1. Structural sheathing shall be applied to all exterior sheathable surfaces of a braced wall line including areas above and below openings.
2. Only full-height braced wall panels shall be used for calculating the braced wall percentage in accordance with Table R602.10.1(1).

DRAFT

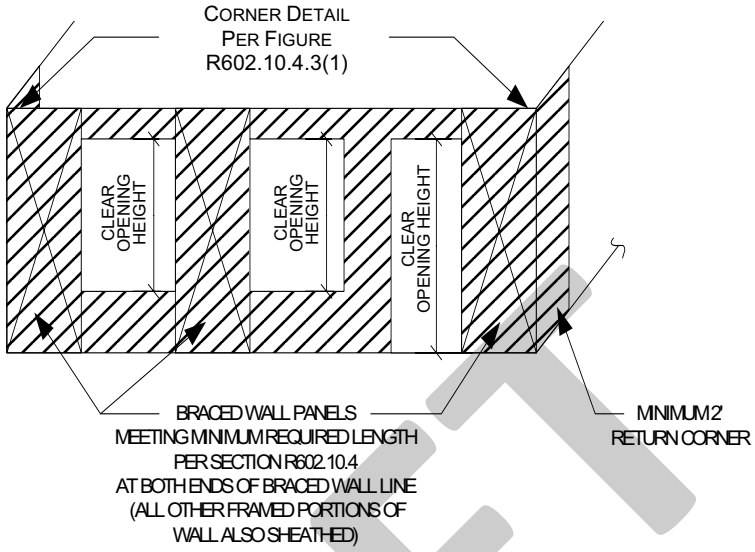

FIGURE R602.10.4(1)
CONTINUOUSLY-SHEATHED BRACED WALL LINE

R602.10.4.2 Braced wall panel length. In a continuously-sheathed wood structural panel braced wall line, the minimum braced wall panel length shall be permitted to be in accordance with Table R602.10.4.2.

TABLE R602.10.4.2
LENGTH REQUIREMENTS FOR BRACED WALL PANELS IN A CONTINUOUSLY SHEATHED WALL [a]

MINIMUM LENGTH OF BRACED WALL PANEL (inches)			MINIMUM OPENING CLEAR HEIGHT NEXT TO THE BRACED WALL PANEL (% of wall height)
8-foot wall	9-foot wall	10-foot wall	
48	54	60	100%
32	36	40	85%
24	27	30	67%

For SI: 1 inch = 25.4 mm, 1 foot = 305 mm
a. Interpolation shall be permitted.

R602.10.4.3 Braced wall panel location and corner construction. A braced wall panel shall be located at each end of a continuously-sheathed braced wall line. A minimum 24-inch (610 mm) wood structural panel corner return shall be provided at both ends of a continuously-sheathed braced wall line in accordance with Figure R602.10.4.3(1). In lieu of the corner return, a tie-down device with a minimum uplift design value of 800 lb shall be fastened to the corner stud and to the foundation or framing below in accordance with Figure R602.10.4.3(2).

Exception: The first braced wall panel shall be permitted to begin 12 feet 6 inches (3810 mm) from each end of the braced wall line in Seismic Design Categories A, B, and C and 8 feet in Seismic Design Categories D_0, D_1, and D_2 provided one of the following is satisfied:

1. A minimum 2-foot-long (610 mm), full-height wood structural panel is provided at both sides of a corner constructed in accordance with Figure R602.10.4.3(1) at the braced wall line ends in accordance with Figure R602.10.4.3(3), or
2. The braced wall panel closest to the corner shall have a tie-down device with a minimum uplift design value of 800 lb (36 kg) fastened to the stud at the edge of the braced wall panel closest to the corner and to the foundation or framing below in accordance with Figure R602.10.4.3(4).

DRAFT

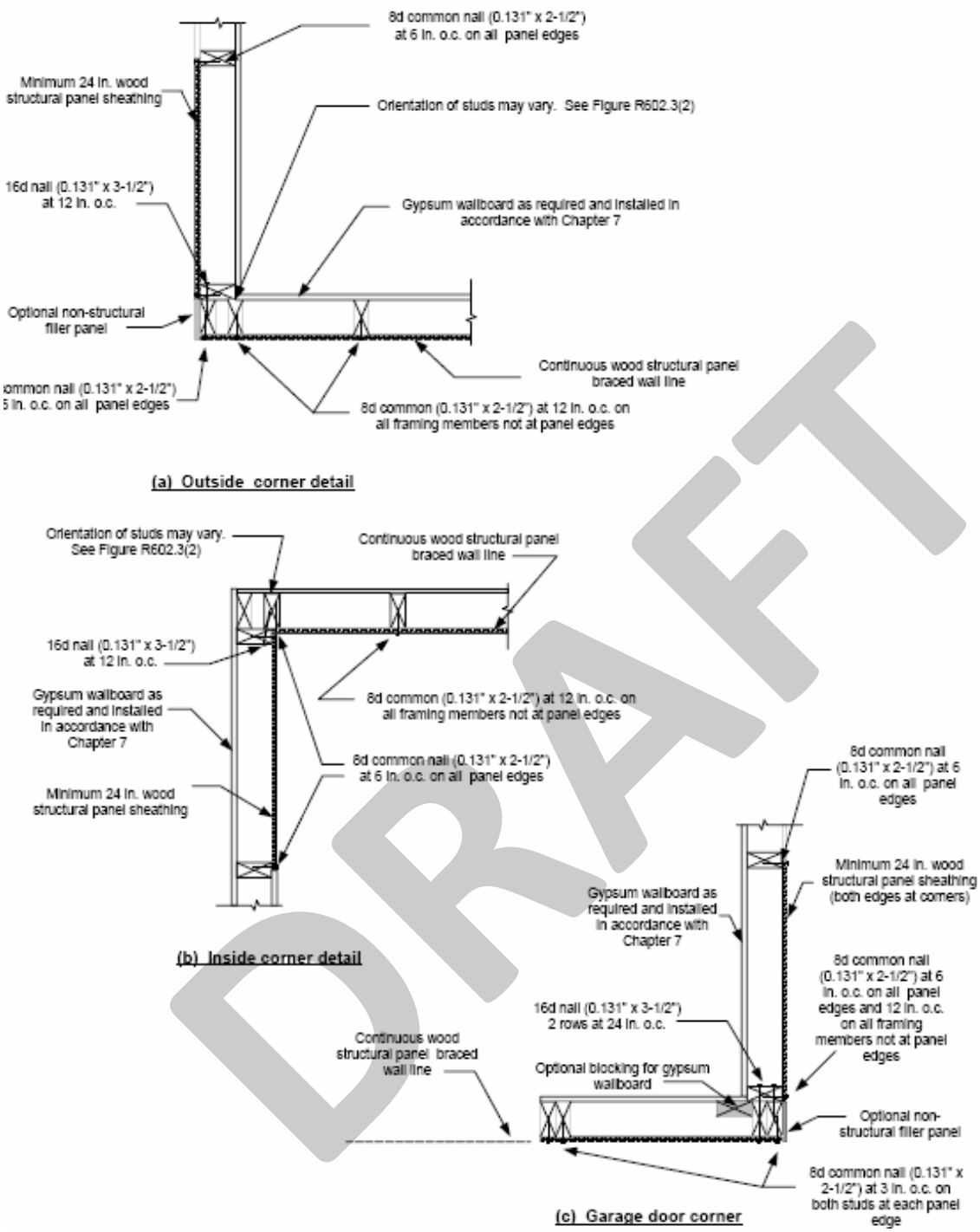

DRAFT

FIGURE R602.10.4.3(1)
TYPICAL EXTERIOR CORNER FRAMING FOR CONTINUOUS STRUCTURAL PANEL SHEATHING SHOWING REQUIRED STUD-TO-STUD NAILING

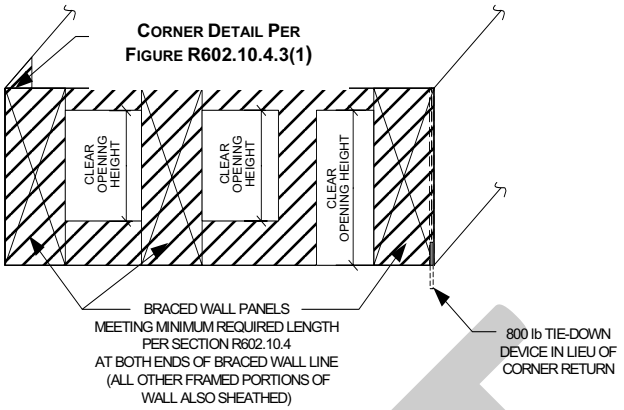

FIGURE R602.10.4.3(2)
CONTINUOUSLY SHEATHED BRACED WALL LINE – WITHOUT CORNER RETURN

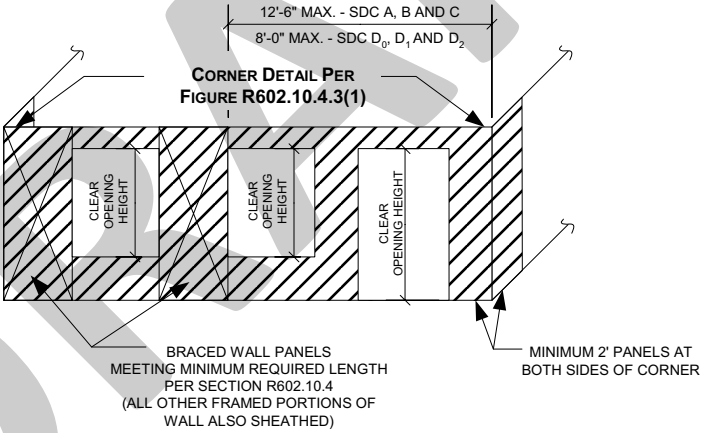

FIGURE R602.10.4.3(3)
CONTINUOUSLY SHEATHED BRACED WALL LINE – FIRST
BRACED WALL PANEL AWAY FROM END OF WALL LINE WITHOUT TIE DOWN

DRAFT

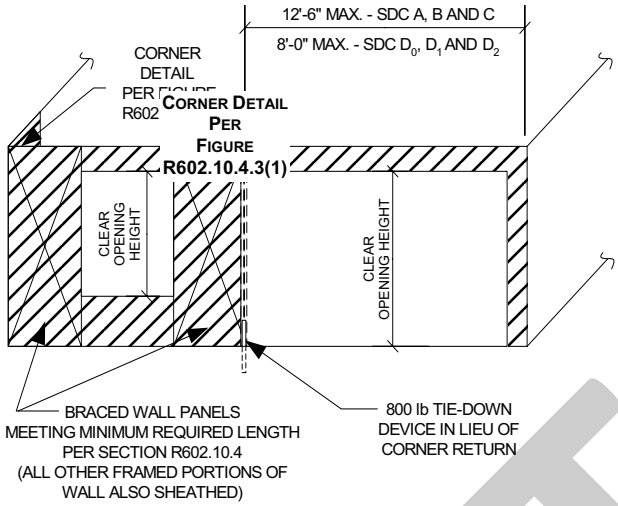

FIGURE R602.10.4.3(4)
CONTINUOUSLY SHEATHED BRACED WALL LINE – FIRST BRACED WALL PANEL AWAY FROM END OF WALL LINE WITH TIE DOWN

R602.10.4.4 Braced wall percentage. In addition to bracing percentage adjustments specified elsewhere in this code, the braced wall percentages for Method 3 from Table 602.10.1(1) shall be permitted to be multiplied by a factor in accordance with Table R602.10.4.4.

TABLE R602.10.4.4
ADJUSTMENT FACTORS TO THE PERCENTAGE OF REQUIRED BRACING PER WALL LINE – CONTINUOUSLY SHEATHED

ADJUSTMENT BASED ON MAXIMUM WALL CLEAR OPENING HEIGHT:		MULTIPLY PERCENTAGE OF BRACING PER WALL LINE BY:
Continuous wood structural panel sheathing when maximum opening height in wall line does not exceed [a] (Section 301.2.2.2.1)	85% of wall height	0.9
	67% of wall height	0.8

a. Percentage of bracing for continuous wood structural panel sheathing shall be based on Method 3 requirements.

R602.10.4.5 4:1 aspect ratio segments at garage door openings used with continuous structural panel sheathing. A 4:1 aspect ratio shall be permitted for full-height sheathed wall segments on either side of garage openings that support light frame roofs only, with roof covering dead loads of 3 psf (0.14 kN/m^2) or less. For purposes of calculating the percentage of panel bracing required by Table R602.10.1(1), the length of the full height sheathing segment shall be equal to its measured length. This option is limited to one wall of the garage.

R602.10.4.6 6:1 aspect ratio segments used with continuous structural panel sheathing. Wall segments having a maximum 6:1 height to width ratio shall be permitted to be built in accordance with Figure R602.10.4.6 The maximum 6:1 height-to-width ratio is based on height being measured from top of header to the bottom of the wall segment bottom-plate. For purposes of calculating the percentage of panel bracing required by Table R602.10.1(1), the width of the full-height sheathing segment shall be equal to its measured width. Corners at the ends of walls using this option shall be constructed in accordance with Figure R602.10.4.3(1). The reduction factors for continuously braced walls from Section R602.10.4.4 shall be applied when calculating applicable percentages of wall bracing. The number of wall segments having a maximum 6:1 height to width ratio in a wall line shall not exceed four. In multi-story buildings, wall segments having a maximum 6:1 height to width ratio are not permitted to be directly stacked vertically. For purposes of resisting wind pressures acting perpendicular to the wall, in accordance with Section R301.2, the minimum requirements of Figure R602.10.4.6 shall be sufficient for wind speeds less than 110 mph in Exposure Category B. For Exposure Categories C and D, the header to jack stud strap requirements and the number of additional jack studs shall be in accordance with Table R602.10.4.6.

R602.10.4.7 Continuously-sheathed braced wall lines. Where a continuously-sheathed braced wall line is used in Seismic Design Categories D_0, D_1, and D_2 or regions where the basic wind speed exceeds 100 miles per hour, all other exterior braced wall lines in the same story shall be continuously sheathed.

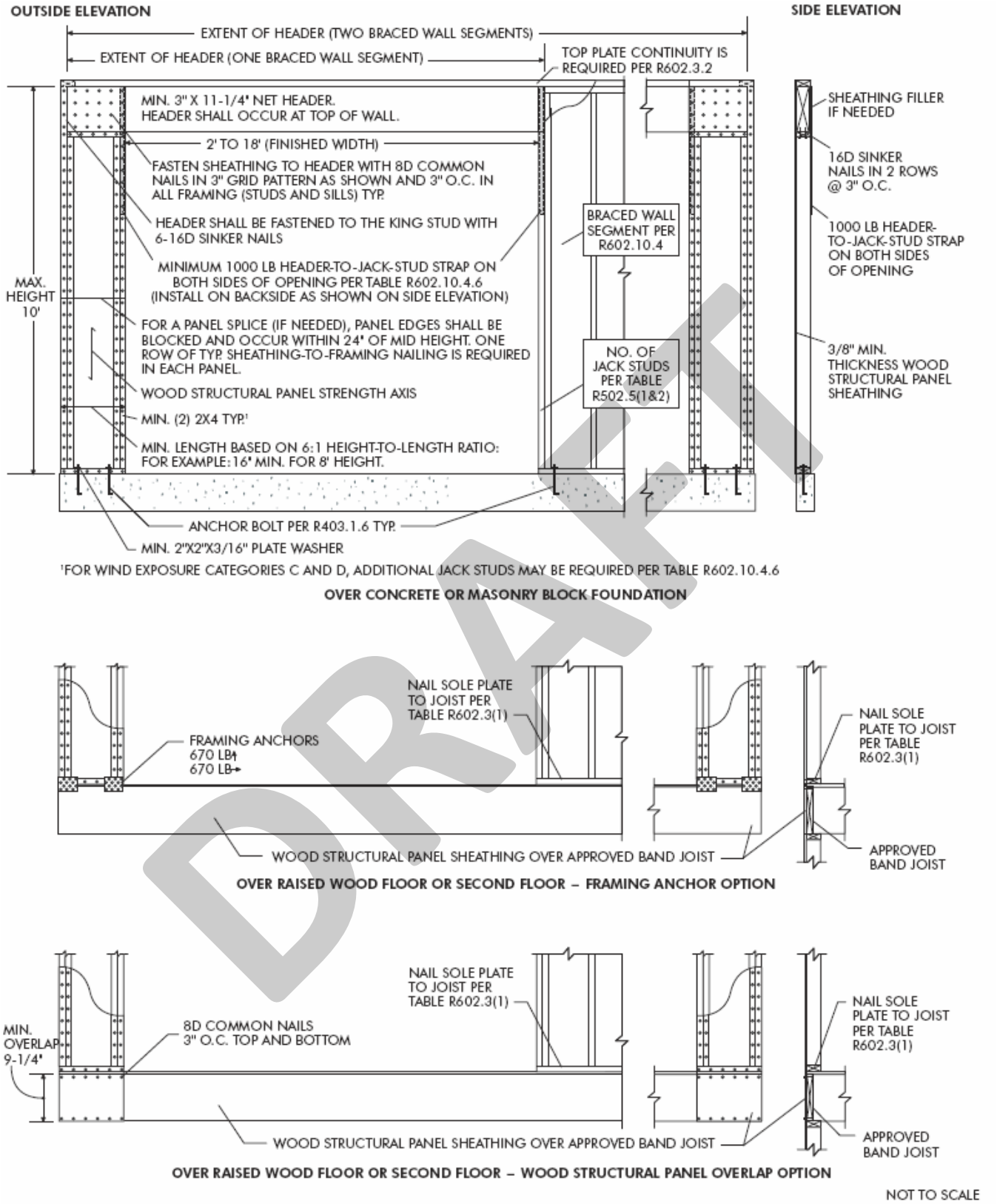

DRAFT

FIGURE R602.10.4.6
WALLS WITH 6:1 ASPECT RATIO USED WITH CONTINUOUS WOOD STRUCTURAL PANEL SHEATHING

TABLE R602.10.4.6
HEADER TO JACK STUD STRAP AND THE NUMBER OF ADDITIONAL JACK STUDS REQUIRED FOR RESISTING WIND PRESSURES PERPENDICULAR TO 6:1 ASPECT RATIO WALLS LOCATED IN WIND EXPOSURE CATEGORIES C AND D

Required	Wall Height (ft)	Wind Exposure Category C			Wind Exposure Category D		
		85 mph	90 mph	less than 110 mph	85 mph	90 mph	less than 110 mph
Strap Capacity(lb)[a]	10 and less	1000	1200	2275	1375	1750	3050
Number of additional 2x4 Jack Studs[b]	8	--	--	--	--	--	1
	9	--	--	1	--	1	2
	10	--	1	2	1	2	3

a. If 2x6 framing is used, then the required strap capacity may be multiplied by 0.65, but in no case shall the required strap capacity be less than 1,000 lb.
b. If 2x6 framing is used, then no additional framing shall be required.

R602.10.5 Braced wall panel support Braced wall panels shall be supported on floor framing or foundations as follows:

1. Where joists are perpendicular to braced wall lines above or below, blocking shall be provided between the joists at braced wall panel locations to permit fastening of wall plates in accordance with Table R602.3(1).
2. Where joists are parallel to braced wall lines above or below, a rim joist or other parallel framing member shall be provided at the wall to permit fastening of wall plates in accordance with Table R602.3(1)
3. Braced wall panels shall be permitted to be supported on cantilevered floor joists meeting the cantilever limits of Section R502.3.3 provided joists are blocked at the nearest bearing wall location, except such blocking shall not be required in Seismic Design Categories A, B, and C for cantilevers not exceeding 24 inches (610 mm) where a full height rim joist is provided.
4. Elevated post or pier foundations supporting braced wall panels shall be designed in accordance with accepted engineering practice.

R602.10.5.1 Interior braced wall panel connections for Seismic Design Categories D_0, D_1 and D_2. Interior braced wall lines shall be fastened to floor and roof framing in accordance with Table R602.3(1), to required foundations in accordance with Section R602.11.1, and in accordance with the following requirements:

1. Floor joists parallel to the top plate shall be toe-nailed to the top plate with at least 8d nails spaced a maximum of 6 inches (150 mm) on center.
2. Top plate laps shall be face-nailed with at least eight 16d nails on each side of the splice.

R602.10.6 Interior braced wall support. In Seismic Design Categories A through D_1, interior braced wall lines shall be supported as provided in Section R502.4.

R602.10.6.1 Interior braced wall support for Seismic Design Category D_2. In one-story buildings located in Seismic Design Category D_2, interior braced wall lines shall be supported on continuous foundations at intervals not exceeding 50 feet (15 240 mm). In two story buildings located in Seismic Design Category D_2, all interior braced wall panels shall be supported on continuous foundations.

Exception: Two-story buildings shall be permitted to have interior braced wall lines supported on continuous foundations at intervals not exceeding 50 feet (15 240 mm) provided that:

1. The height of cripple walls does not exceed 4 feet (1219 mm).
2. First-floor braced wall panels are supported on doubled floor joists, continuous blocking or floor beams.
3. The distance between bracing lines does not exceed twice the building width measured parallel to the braced wall line.

R602.10.7 Panel joints. All vertical joints of panel sheathing shall occur over, and be fastened to common studs. Horizontal joints in braced wall panels shall occur over, and be fastened to common blocking of a minimum 1-1/2 inch (38 mm) thickness.

DRAFT

Exceptions:

1. Blocking at horizontal joints shall not be required in wall segments that are not counted as braced wall panels.
2. Where the bracing percentage provided is at least twice the minimum percentage required by Table R602.10.1(1) blocking at horizontal joints shall not be required in braced wall panels constructed using Methods 3, 4, 5, 6, or 8.

R602.10.8 Cripple wall bracing. In Seismic Design Categories other than D_2, cripple walls shall be braced with a percentage and type of bracing as required for the wall above in accordance with Table R602.10.1(1) with the following modifications for cripple wall bracing:

1. The percentage of bracing as determined from Table R602.10.1(1) shall be multiplied by a factor of 1.15, and
2. The wall panel spacing shall be decreased to 18 feet (5486 mm) instead of 25 feet (7620 mm).

R602.10.8.1 Cripple wall bracing in Seismic Design Categories D_0, D_1 and D_2. In addition to the requirements of Section R602.10.8, where interior braced wall lines occur without a continuous foundation below, the length of parallel exterior cripple wall bracing shall be one and one-half times the length required by Table R602.10.1(1). Where cripple walls braced using Method 3 of Section R602.10.2 cannot provide this additional length, the capacity of the sheathing shall be increased by reducing the spacing of fasteners along the perimeter of each piece of sheathing to 4 inches (102 mm) on center.

In Seismic Design Category D_2, cripple walls shall be braced in accordance with Table R602.10.1(1).

R602.10.8.2 Redesignation of cripple walls. In any Seismic Design Category, cripple walls shall be permitted to be redesignated as the first story walls for purposes of determining wall bracing requirements. If the cripple walls are redesignated, the stories above the redesignated story shall be counted as the second and third stories respectively.

R602.11 Wall anchorage. Braced wall line sills shall be anchored to concrete or masonry foundations in accordance with Sections R403.1.6 and R602.11.1

602.11.1 Wall anchorage for all buildings in Seismic Design Categories D_0, D_1 and D_2 and townhouses in Seismic Design Category C. Plate washers, a minimum of 0.229 inch by 3 inches by 3 inches (5.8 mm by 76 mm by 76 mm) in size, shall be provided between the foundation sill plate and the nut except where approved anchor straps are used. The hole in the plate washer is permitted to be diagonally slotted with a width of up to 3/16 inch (5 mm) larger than the bolt diameter and a slot length not to exceed 1-3/4 inches (44 mm), provided a standard cut washer is placed between the plate washer and the nut.

R602.11.2 Stepped foundations in Seismic Design Categories D_0, D_1 and D_2. In all buildings located in Seismic Design Categories D_0, D_1 or D_2, where the height of a required braced wall line that extends from foundation to floor above varies more than 4 feet (1220 mm), the braced wall line shall be constructed in accordance with the following:

1. Where the lowest floor framing rests directly on a sill bolted to a foundation not less than 8 feet (2440 mm) in length along a line of bracing, the line shall be considered as braced. The double plate of the cripple stud wall beyond the segment of footing that extends to the lowest framed floor shall be spliced by extending the upper top plate a minimum of 4 feet (1219 mm) along the foundation. Anchor bolts shall be located a maximum of 1 foot and 3 feet (305 and 914 mm) from the step in the foundation. See Figure R602.11.3.
2. Where cripple walls occur between the top of the foundation and the lowest floor framing, the bracing requirements of Sections R602.10.8 and R602.10.8.1 shall apply.
3. Where only the bottom of the foundation is stepped and the lowest floor framing rests directly on a sill bolted to the foundations, the requirements of Sections R403.1.6 and R602.11.1 shall apply.

Section R606.3 Change to read as shown: (RB238-06/07)

R606.3 Corbeled masonry. Corbeled masonry shall be in accordance with Sections R606.3.1 through R606.3.3.

Section R606.3.1, R606.3.2, R606.3.3 Add new sections to read as shown: (RB238-06/07)

R606.3.1 Units. Solid masonry units or masonry units filled with mortar or grout shall be used for corbeling.

DRAFT

R301.2.2.3.5 Cold-formed steel framing in Seismic Design Categories D_0, D_1 and D_2. In Seismic Design Categories D_0, D_1 and D_2 in addition to the requirements of this code, cold-formed steel framing shall comply with the requirements of COFS/PM.

R301.2.2.3.6 Masonry chimneys. Masonry chimneys shall be reinforced and anchored to the building in accordance with Sections R1003.3 and R1003.4.

R301.2.2.3.7 Anchorage of water heaters. Water heaters shall be anchored against movement and overturning in accordance with Section M1307.2.

R301.2.2.4 Seismic Design Category E. Buildings in Seismic Design Category E shall be designed in accordance with the *International Building Code*, except when the seismic design category is reclassified to a lower seismic design category in accordance with Section R301.2.2.1.

Section R301.2.3 Change to read as shown: (RB34-06/07)

R301.2.3 Snow loads. Wood framed construction, cold-formed steel framed construction and masonry and concrete construction, and structural insulated panel construction in regions with ground snow loads 70 pounds per square foot (3.35 kPa) or less, shall be in accordance with Chapters 5, 6 and 8. Buildings in regions with ground snow loads greater than 70 pounds per square foot (3.35 kPa) shall be designed in accordance with accepted engineering practice.

Section R301.2.4 Change to read as shown: (RB48-06/07)

R301.2.4 Floodplain construction. Buildings and structures constructed in whole or in part in flood hazard areas (including A or V Zones) as established in Table R301.2(1) shall be designed and constructed in accordance with Section R324.

> **Exception:** Buildings and structures located in whole or in part in identified floodways shall be designed and constructed in accordance with *Flood Resistant Design and Construction* (ASCE 24).

Section R301.2.4.1 Add new section to read as shown: (RB48-06/07)

R301.2.4.1 Alternative provisions. As an alternative to the requirements in Section R324.3 for buildings and structures located in whole or in part in coastal high hazard areas (V Zones), ASCE 24 is permitted subject to the limitations of this code and the limitations therein.

Section R301.3 Change to read as shown: (S100-06/07 Part II)

R301.3 Story height. Buildings constructed in accordance with these provisions shall be limited to story heights of not more than the following:

1. For wood wall framing, the laterally unsupported bearing wall stud height permitted by Table R602.3(5) plus a height of floor framing not to exceed 16 inches.

   Exception: For wood framed wall buildings with bracing in accordance with Table R602.10.1, the wall stud clear height used to determine the maximum permitted story height may be increased to 12 feet (3658 mm) without requiring an engineered design for the building wind and seismic force resisting systems provided that the length of bracing required by Table R602.10.1 is increased by multiplying by a factor of 1.20. Wall studs are still subject to the requirements of this section.

2. For steel wall framing, a stud height of 10 feet (3048 mm), plus a height of floor framing not to exceed 16 inches (406 mm).
3. For masonry walls, a maximum bearing wall clear height of 12 feet (3658 mm) plus a height of floor framing not to exceed 16 inches (406 mm).

   Exception: An additional 8 feet (2438 mm) is permitted for gable end walls.

4. For insulating concrete form walls, the maximum bearing wall height per story as permitted by Section R611 tables plus a height of floor framing not to exceed 16 inches (406 mm).
5. For structural insulated panel walls, the maximum bearing wall height per story as permitted by Section 614 tables plus a height of floor framing not to exceed 10 feet (3048 mm).

DRAFT

Individual walls or walls studs shall be permitted to exceed these limits as permitted by Chapter 6 provisions, provided story heights are not exceeded. Floor framing height shall be permitted to exceed these limits provided the story height does not exceed 11 feet 7 inches (3531 mm). An engineered design shall be provided for the wall or wall framing members when they exceed the limits of Chapter 6. Where the story height limits are exceeded, an engineered design shall be provided in accordance with the *International Building Code* for the overall wind and seismic force resisting systems.

Table R301.5 Delete the row for "Exterior balconies" and Change row "Decks" and footnotes to read as shown: (RB49-06/07 and S9-06/07 Part II)

TABLE R301.5
MINIMUM UNIFORMLY DISTRIBUTED LIVE LOADS
(in pounds per square foot)

USE	LIVE LOAD
Balconies (exterior) and decks[e]	40

(Portions of table not shown remain unchanged)

For SI: 1 pound per square foot = 0.0479 kPa, 1 square inch = 645 mm2, 1 pound = 4.45 N.

a. Elevated garage floors shall be capable of supporting a 2,000-pound load applied over a 20-square-inch area.
b. Attics without storage are those where the maximum clear height between joist and rafter is less than 42 inches, or where there are not two or more adjacent trusses with the same web configuration capable of containing a rectangle 42 inches high by 2 feet wide, or greater, located within the plane of the truss. For attics without storage, this live load need not be assumed to act concurrently with any other live load requirements.
c. Individual stair treads shall be designed for the uniformly distributed live load or a 300-pound concentrated load acting over an area of 4 square inches, whichever produces the greater stresses.
d. A single concentrated load applied in any direction at any point along the top.
e. See Section R502.2.2 for decks attached to exterior walls.
f. Guard in-fill components (all those except the handrail), balusters and panel fillers shall be designed to withstand a horizontally applied normal load of 50 pounds on an area equal to 1 square foot. This load need not be assumed to act concurrently with any other live load requirement.
g. For attics with limited storage and constructed with trusses, this live load need be applied only to those portions of the bottom chord where there are two or more adjacent trusses with the same web configuration capable of containing a rectangle 42 inches high or greater by 2 feet wide or greater, located within the plane of the truss. The rectangle shall fit between the top of the bottom chord and the bottom of any other truss member, provided that each of the following criteria is met:
    1. The attic area is accessible by a pull-down stairway or framed opening in accordance with Section R807.1; and
    2. The truss has a bottom chord pitch less than 2:12.
    3. Required insulation depth is less than the bottom chord member depth.

    The bottom chords of trusses meeting the above criteria for limited storage shall be designed for the greater of the actual imposed dead load or 10 psf, uniformly distributed over the entire span.
h. Attic spaces served by a fixed stair shall be designed to support the minimum live load specified for sleeping rooms.
i. Glazing used in handrail assemblies and guards shall be designed with a safety factor of 4. The safety factor shall be applied to each of the concentrated loads applied to the top of the rail, and to the load on the in-fill components. These loads shall be determined independent of one another, and loads are assumed not to occur with any other live load.

DRAFT

Code Modification Attachment

A request is herby made for an appeal, interpretation or modification related to Section(s) IRC 2006 R301.3 Story Height & R602.10 Wall Bracing of the Construction Code, which require(s) that:

Story Height

R301.3 Story height, which requires that floor framing not exceed 16 inches in height.

Wall Bracing

R602.10 Wall bracing subsection *R602.10.5 Continuous wood structural panel sheathing*, which requires that sheathing be provided in accordance with Method 3 on all sheathable areas of all exterior walls, and interior braced wall lines, where required.

State the precise relief, remedy, or result requested:

Story Height

Remedy: Permit the use of 2007 IRC Supplement *R301.3 Story height* in lieu of 2006 IRC *R301.3 Story height.*

The 2006 IRC precludes the use of 20" deep floor framing that is commonly used for residential construction in the Phoenix metropolitan area. The 2007 Supplement permits the use of 20" floor framing stating:

> Individual walls or walls studs shall be permitted to exceed these limits [16" deep floor framing] as permitted by Chapter 6 provisions, provided story heights are not exceeded. Floor framing height shall be permitted to exceed these limits provided the story height does not exceed 11 feet 7 inches (3531 mm).

Wall Bracing

Remedy: Permit the use of 2007 IRC Supplement *R602.10.4 Continuously-sheathed braced wall line requirements* in lieu of IRC 2006 *R602.10.5 Continuous wood structural panel sheathing*.

The 2006 IRC section R602.10.5 requires the installation of sheathing on all exterior walls of a home. The 2007 Supplement permits the continuous sheathing method of bracing to be used on a wall line-by-wall line basis.

State the factual and/or legal basis for the appeal, interpretation, or modification. If a modification is requested, include the reason(s) why the proposed modification of the code meets the intent of the code.

Story Height & Wall Bracing

The 2007 IRC Supplement is a recognized model building code developed through the International Code Council's code development process. Permitting the use of provisions from the 2007 IRC Supplement is justifiable because it provides the latest development towards the code's purpose as stated in *R301.3 Purpose.*

A national builder seeks to submit home plans citing prescriptive construction methods to this city for the construction of new homes. The builder desires to employ prescriptive bracing via continuous sheathing on a wall line-by-wall line basis as a means of reducing construction costs and delays.

DRAFT

Maricopa Association of Governments Building Code Amendments and Standards Manual **BCAS #15**	
Title: **9.5 Course Wall Details for Wind Exposure B and C**	MARICOPA ASSOCIATION of GOVERNMENTS **BCAS Manual**
Originally Reviewed by MAG Building Codes Committee: **6/20/2012**	
Updated by MAG Building Codes Committee: **none**	

At the June 20, 2012 Building Codes Committee meeting, the Committee hosted representatives from the Arizona Masonry Guild, who presented a new standard detail for 4" masonry block walls. This detail was created and sealed by the Felten Group, and is intended to be used for free by contractors and homeowners who need an engineered wall detail as part of a building permit application. Using the detail would allow a contractor or homeowner to submit an engineered detail without needing to hire and pay an architect or engineer for the design.

At the August 15, 2012, meeting, the Committee voted to make the detail available to any member agency in order to distribute the detail to interested parties for their use as needed.

DRAFT

DETAIL DRAWN BY:

FELTEN GROUP
ENGINEERS • ARCHITECTS • DESIGNERS

18325 N. ALLIED WAY
SUITE 200
PHOENIX, AZ 85054

ARIZONA MASONRY GUILD

EXP. B WIND
9 1/2 COURSE FENCE STANDARD

REVISIONS	ENGINEERED BY / DATE
1	G.FELTEN / BMJ
2	06/05/12

PRESUMPTIVE SOIL

LATERAL SOIL PASSIVE PRESSURE OF 200 PSF/FT

SHEET

S1.1

Registered Professional Engineer (Structural)
CERTIFICATE NO.
34052
BRIAN M. JUEDES
Date Signed 6/5/2012
ARIZONA, U.S.A.
EXPIRES 09/30/14

* SEE SHEET GSN FOR GENERAL STRUCTURAL NOTES

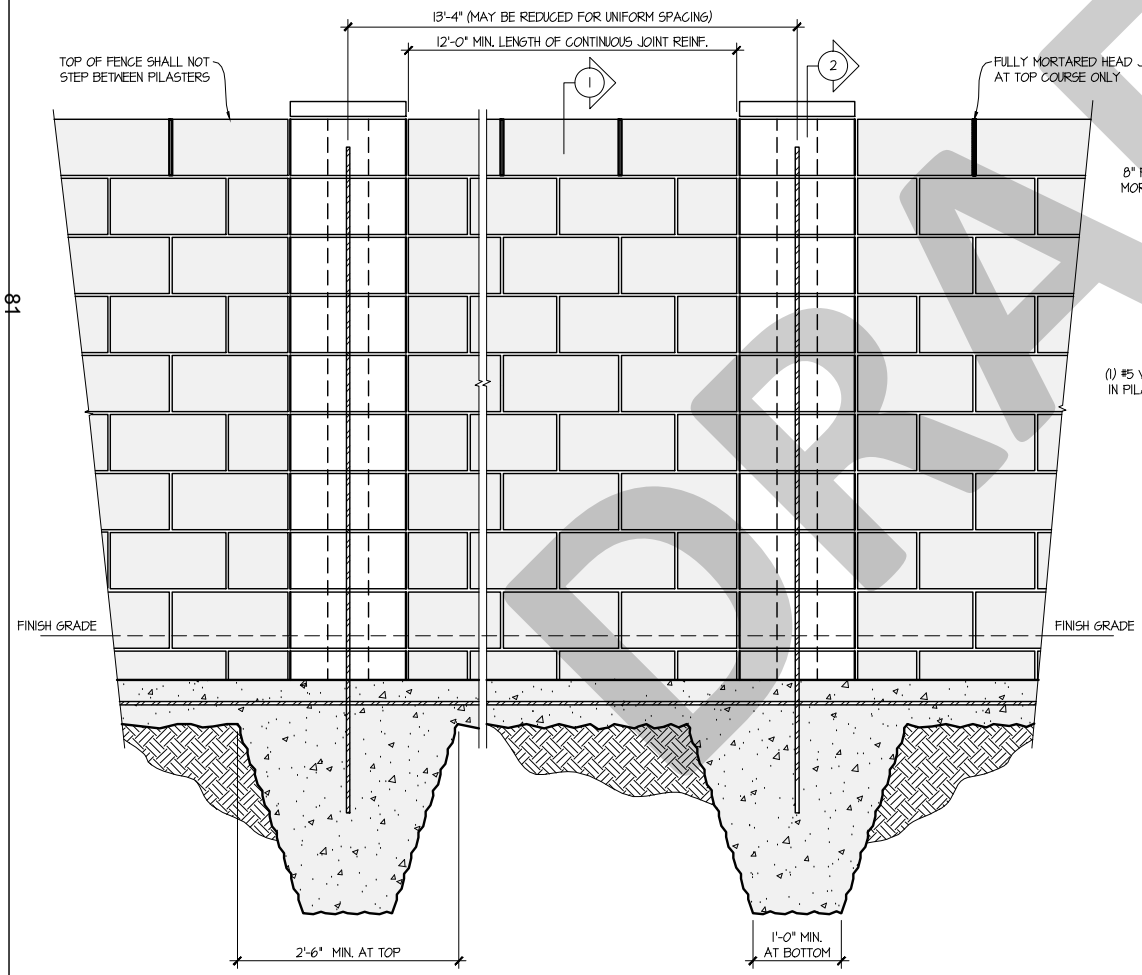

TOP VIEW
AT PILASTERS SHOWING
4" INTERSECTING WALL

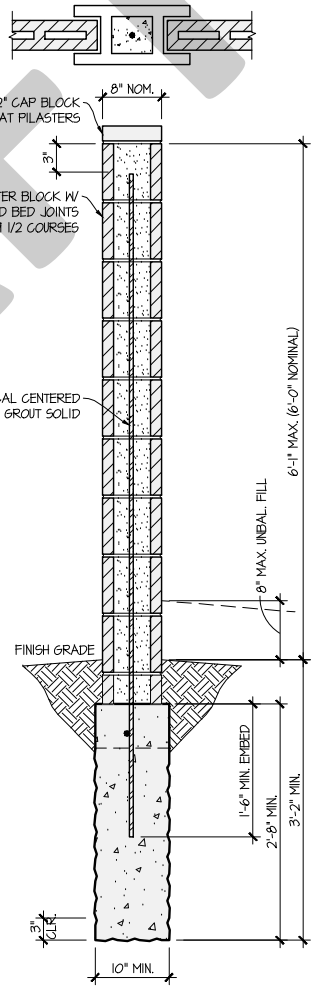

2 SECTION

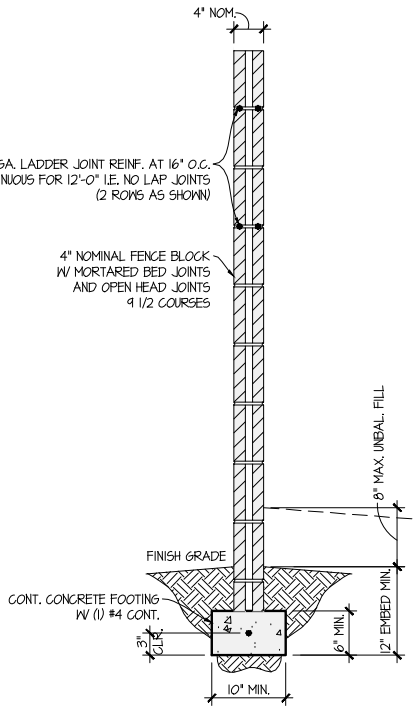

1 SECTION

4" INTERLOCKING BLOCK WALL W/ PILASTERS

SCALE: 1/2" = 1'-0"

DRAFT

DETAIL DRAWN BY:

FELTEN GROUP
ENGINEERS • ARCHITECTS • DESIGNERS

18325 N. ALLIED WAY
SUITE 200
PHOENIX, AZ 85054

ARIZONA MASONRY GUILD

EXP. C WIND
9 1/2 COURSE FENCE STANDARD

REVISIONS	ENGINEERED BY / DATE
1	G.FELTEN / BMJ
2	06/05/12

PRESUMPTIVE SOIL
LATERAL SOIL PASSIVE PRESSURE OF 200 PSF/FT

SHEET
S1.1

Registered Professional Engineer (Structural)
CERTIFICATE NO.
34052
BRIAN M. JUEDES
Date Signed 6/5/2012
ARIZONA, U.S.A.
EXPIRES 09/30/14

* SEE SHEET GSN FOR GENERAL STRUCTURAL NOTES

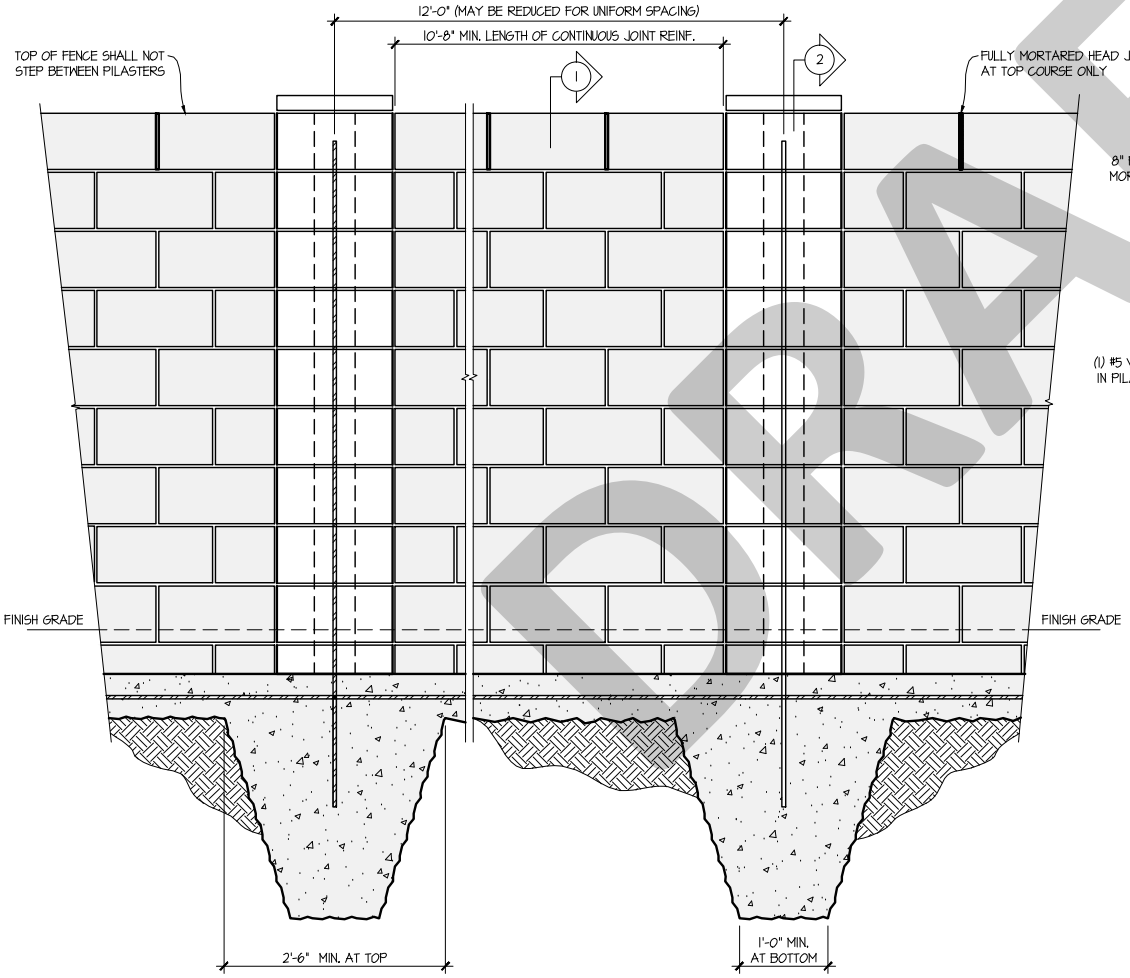

TOP VIEW
AT PILASTERS SHOWING
4" INTERSECTING WALL

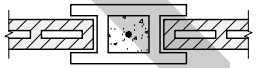

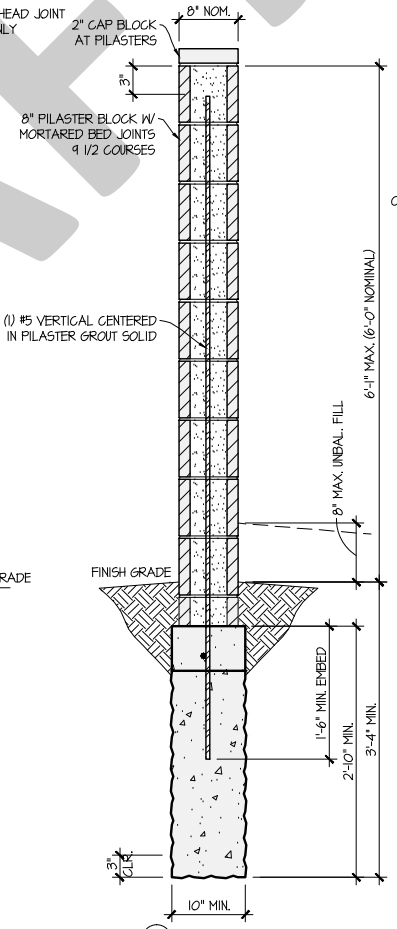

2 SECTION

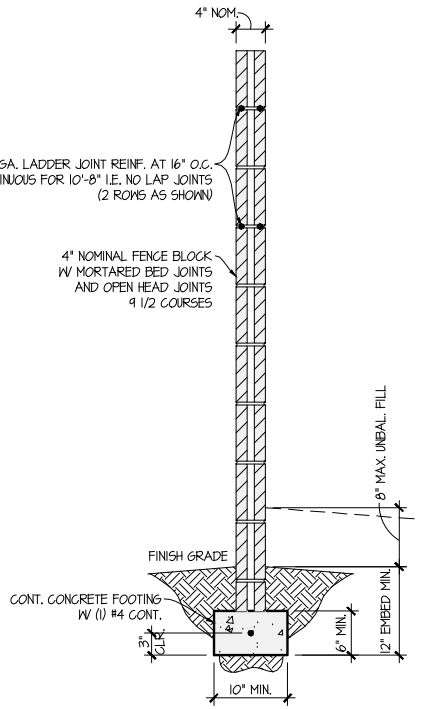

1 SECTION

4" INTERLOCKING BLOCK WALL W/ PILASTERS

SCALE: 1/2" = 1'-0"

DRAFT

DETAIL DRAWN BY:

FELTEN GROUP
ENGINEERS • ARCHITECTS • DESIGNERS

18325 N. ALLIED WAY
SUITE 200
PHOENIX, AZ 85054

ARIZONA MASONRY GUILD

GENERAL STRUCTURAL NOTES FOR MASONRY FENCES

REVISIONS	ENGINEERED BY / DATE
1	G.FELTEN / BMJ
2	06/21/12

SHEET

GSN

Registered Professional Engineer (Structural)
CERTIFICATE NO. 34052
BRIAN M. JUEDES
Date Signed 6/21/2012
ARIZONA, U.S.A.
EXPIRES 09/30/14

* SEE SHEET S1.1 FOR MASONRY FENCE DESIGN

CONCRETE

1. ALL MATERIALS, PROCEDURES, PLACEMENT, FORMWORK, LAPS, ETC. TO CONFORM TO THE LATEST ACI STANDARDS.
2. SHALL MEET ALL THE REQUIREMENTS OF ACI 301, TYPE II CEMENT U.N.O. MINIMUM STRENGTHS AT 28 DAYS SHALL BE AS FOLLOWS, U.N.O.:
   CONVENTIONAL FOUNDATIONS - 2500 PSI
3. MAXIMUM SIZE OF AGGREGATE SHALL BE 1 INCH. AGGREGATE PER ASTM C57 OR C33.
4. MAXIMUM SLUMP TO BE 8 INCHES.
5. CALCIUM CHLORIDE OR ADMIXTURES CONTAINING CALCIUM CHLORIDE SHALL NOT BE USED AS ADDITIVES.
6. FLYASH MAY BE USED PROVIDED IT MEETS ASTM C618 TYPE F AND DOES NOT EXCEED 20% OF THE WEIGHT OF TOTAL CEMENTITIOUS MATERIAL FOR CONCRETE STRENGTH UP TO AND INCLUDING 3000 PSI.
7. PROTECT CONCRETE FROM DAMAGE OR REDUCED STRENGTH FROM COLD OR HOT WEATHER IN COMPLIANCE WITH ACI 305 AND ACI 306.
8. THE CONTRACTOR SHALL PROVIDE PROPER CURING TO MINIMIZE SHRINKAGE CRACKING AND ENSURE PROPER STRENGTH GAIN.
9. EVALUATION AND ACCEPTANCE OF CONCRETE SHALL BE BASED ON CYLINDER STRENGTH TESTS AS OUTLINED IN THE APPLICABLE BUILDING CODE
10. CONCRETE THAT IS IN DIRECT CONTACT WITH NATIVE SOILS CONTAINING WATER-SOLUBLE SULFATES SHALL CONFORM TO THE FOLLOWING: FOR SULFATE CONCENTRATIONS GREATER THAN OR EQUAL TO 0.1% BUT LESS THAN 0.2% BY WEIGHT CONCRETE SHALL BE MADE WITH ASTM C 150 TYPE II CEMENT, OR AN ASTM C 595 OR C 1157 HYDRAULIC CEMENT MEETING MODERATE SULFATE-RESISTANT HYDRAULIC CEMENT (MS) DESIGNATION. FOR SULFATE CONCENTRATIONS EQUAL TO OR GREATER THAN 0.2% BY WEIGHT, CONCRETE SHALL BE MADE WITH ASTM C 150 TYPE V CEMENT OR AN ASTM C 595 OR C 1157 HYDRAULIC CEMENT MEETING HIGH SULFATE-RESISTANT HYDRAULIC CEMENT (HS) DESIGNATION AND SHALL HAVE A MINIMUM COMPRESSIVE STRENGTH OF 3000 PSI AT 28 DAYS.

MASONRY

1. ALL MATERIALS, PROCEDURES, PLACEMENT, LAPS, ETC. TO CONFORM TO THE LATEST ACI STANDARDS.
2. CONCRETE MASONRY UNITS - NET AREA COMPRESSIVE STRENGTH OF CMU = 1900 PSI, ASTM C90, F'm = 1500 PSI
3. GROUT - 2000 PSI CONFORMING TO ASTM C476.
4. MORTAR - TYPE S - 2000 PSI PORTLAND CEMENT / LIME OR MORTAR CEMENT CONFORMING TO ASTM C270. MORTAR MAY BE USED IN LIEU OF GROUT IN THE PILASTER CELL PROVIDED THAT THE MORTAR IS PLACED IN 8 INCH LIFTS AS THE FENCE IS BUILT
5. JOINT REINFORCING fy = 70000 PSI CONFORMING TO ASTM A951.
6. JOINT REINFORCING TO BE CONTINUOUS (NO SPLICES) AT THE BOTTOM OF THE FIRST AND THIRD COURSE FROM THE TOP OF THE WALL AS SHOWN IN THE DRAWINGS. AS AN ALTERNATE, JOINT REINFORCING MAY BE SPLICED WITH NO LAP, PROVIDED THAT AN ADDITIONAL ROW OF JOINT REINFORCING IS PLACED AT THE BOTTOM OF THE SECOND AND FORTH COURSE FROM THE TOP OF THE WALL AND PROVIDED THAT THE SPLICES BETWEEN ADJACENT ROWS OF JOINT REINFORCEMENT ARE STAGGERED BY A MINIMUM OF 4 FEET
7. ALL REINFORCED CELLS OR PILASTERS SHALL BE SOLID GROUTED.
8. MASONRY UNITS AND MORTAR THAT ARE IN DIRECT CONTACT WITH NATIVE SOILS CONTAINING WATER SOLUBLE SULFATES SHALL BE ADDRESSED BY THE CONTRACTOR.
9. CMU EXPOSURE TO WATER (BOTH ABOVE AND BELOW GRADE) IS NOT ADDRESSED IN THIS DESIGN AND SHALL BE ADDRESSED BY THE CONTRACTOR.

STEEL REINFORCEMENT

1. SHALL BE SUPPLIED AND INSTALLED PER THE LATEST ACI STANDARDS.
2. USE ASTM A615 GRADE 60
3. THE FOLLOWING MINIMUM CONCRETE COVER SHALL BE PROVIDED FOR REINFORCEMENT.
   CAST AGAINST AND PERMANENTLY EXPOSED TO EARTH 3"
   EXPOSED TO EARTH OR WEATHER 1 1/2"
   NOT EXPOSED TO WEATHER OR IN CONTACT WITH GROUND 3/4"
4. UNLESS NOTED OTHERWISE, LAP SPLICES SHALL BE 48 BAR DIAMETERS MINIMUM. STAGGER ALTERNATE SPLICES A MINIMUM OF 1 LAP LENGTH. PROVIDE BENT CORNER BARS TO MATCH AND LAP WITH HORIZONTAL BARS AT CORNERS AND INTERSECTIONS OF FOOTINGS AND WALLS.
5. SECURELY TIE ALL BARS IN LOCATION BEFORE PLACING CONCRETE.

GRADING AND DRAINAGE

1. PROPER GRADING SHALL BE PROVIDED DURING CONSTRUCTION AS WELL AS THROUGHOUT THE LIFE OF THE STRUCTURE.
2. LANDSCAPE WATERING SHOULD NOT LEAD TO MOISTURE INFILTRATION OR MOISTURE CONTENT FLUCTUATION IN THE SOILS UNDER THE FOUNDATION. IT IS RECOMMENDED THAT VEGETATION BE KEPT A MINIMUM OF 3 FEET FROM THE STRUCTURE AND THAT THE VEGETATION BE DESERT TYPE. (SHALLOW WATERING, MOISTURE NOT TO PENETRATE INTO THE SOIL MORE THAN 8 INCHES).
3. IT IS RECOMMENDED THAT TREES BE KEPT AWAY FROM THE STRUCTURE SUCH THAT THE DRIP LINE OF THE MATURE TREE DOES NOT OVERLAP THE FOUNDATION.

SOIL

1. SEE SHEET S1.1 FOR GEOTECHNICAL REPORT INFORMATION
2. IN THE ABSENCE OF A GEOTECHNICAL REPORT, PRESUMPTIVE SOIL DESIGN VALUES SHALL BE USED. THE CLIENT ACCEPTS FULL RESPONSIBILITY FOR THE ADEQUACY OF THE PRESUMPTIVE SOIL DESIGN VALUES USED FOR THE PROJECT. THE CLIENT ALSO ASSUMES FULL RESPONSIBILITY FOR THE ADEQUACY OF THE ASSUMED NON-EXPANCIVE, NON-COLLAPSABLE AND NON-CORROSIVE SOIL PROPERTIES
3. PRESUMPTIVE SOIL DESIGN VALUES ARE: ALLOWABLE SOIL BEARING = 1000 P.S.F. 12" BELOW GRADE, EQUIVALENT FLUID PRESSURE =35 psf/ft, PASSIVE PRESSURE =200 psf/ft, COEFFICIENT OF FRICTION =.35
4. SOIL IS ASSUMED TO BE NON-EXPANSIVE NON-COLLAPSABLE, AND NON-CORROSIVE.
5. ALL EXCAVATION, FILL (INCLUDING RETAINING COMPACTION, AND SOIL RELATED OPERATIONS SHALL BE PERFORMED ACCORDING TO THE GEOTECHNICAL REPORT.

WIND

1. 110 PSF LATERAL WIND PRESSURE. 2006/2009 IBC, 90 MPH, EXP. B ASCE 7-05/10 NOTE: ASCE 7-02 FIGURE 6-20 TO REPLACE 7-05 FIGURE 6-20 TO KEEP LATERAL WIND FORCE CONSISTENT FOR RESIDENTIAL FENCES AND IS A AN ACCEPTED PRACTICE FOR MANY JURISDICTIONS IN ARIZONA. (FOR EXAMPLE THE CITY OF PHOENIX ADDED EXCEPTION 5 TO 2006 IBC SECTION 1609.1.1 "FOR DESIGN WIND LOADS ON SOLID FREESTANDING WALLS AND SOLID SIGNS PER ASCE 7-05, SECTION 6.5.14, FIGURE 6-20 OF ASCE 7-02 MAY BE USED")

2. 125 PSF LATERAL WIND PRESSURE. 2006/2009 IBC, 90 MPH, EXP. C ASCE 7-05/10 NOTE: ASCE 7-02 FIGURE 6-20 TO REPLACE 7-05 FIGURE 6-20 TO KEEP LATERAL WIND FORCE CONSISTENT FOR RESIDENTIAL FENCES AND IS A AN ACCEPTED PRACTICE FOR MANY JURISDICTIONS IN ARIZONA. (FOR EXAMPLE THE CITY OF PHOENIX ADDED EXCEPTION 5 TO 2006 IBC SECTION 1609.1.1 "FOR DESIGN WIND LOADS ON SOLID FREESTANDING WALLS AND SOLID SIGNS PER ASCE 7-05, SECTION 6.5.14, FIGURE 6-20 OF ASCE 7-02 MAY BE USED")

DISCREPANCIES

1. THE CONTRACTOR SHALL BE RESPONSIBLE FOR VERIFICATION OF ALL DIMENSIONS AND CONDITIONS WITH THE DRAWINGS PRIOR TO START OF CONSTRUCTION. THE CONTRACTOR SHALL INFORM THE ARCHITECT OR ENGINEER OF ANY DISCREPANCIES OR OMISSIONS NOTED ON THE DRAWINGS. ANY SUCH DISCREPANCIES, OMISSIONS, OR VARIATION NOT REPORTED SHALL BE THE RESPONSIBILITY OF THE CONTRACTOR.
2. NOTED DIMENSIONS TAKE PRECEDENT OVER SCALED.

DAMPPROOFING

1. DAMPPROOFING OF THOSE PORTIONS OF FENCES BELOW GRADE IS NOT REQUIRED PER CODE, BUT MAY BE USED BY CONTRACTOR AT THEIR DISCRETION.
2. AS AN ALTERNATE TO DAMPPROOFING, INTEGRAL WATER REPELLANT UNITS AND WATER REPELLANT MORTAR MAY BE USED.

METHOD OF CONSTRUCTION

1. THE CONTRACTOR SHALL BE SOLELY RESPONSIBLE FOR CONSTRUCTION MEANS, METHODS, TECHNIQUES, SEQUENCES, AND PROCEDURE.
2. THE CONTRACTOR SHALL BE RESPONSIBLE FOR THE SAFETY OF THE STRUCTURE DURING CONSTRUCTION AND SHALL PROVIDE ADEQUATE SHORING AND BRACING DURING CONSTRUCTION. CONTRACTOR SHALL COMPLY WITH ALL APPLICABLE SAFETY REGULATIONS.
3. THE CONTRACTOR SHALL COORDINATE THE WORK OF ALL TRADES AND SHALL CHECK ALL DIMENSIONS. ANY DISCREPANCIES SHALL BE CALLED TO THE ATTENTION OF THE ARCHITECT OR ENGINEER AND SHALL BE RESOLVED BEFORE PRECEDING WITH THE WORK AFFECTED.

GENERAL

1. ALL WORK SHALL COMPLY WITH THE GENERAL NOTES, DRAWINGS, APPLICABLE BUILDING CODES AND ALL LOCAL ORDINANCES, LAWS, REGULATIONS, AND PROTECTIVE COVENANTS GOVERNING THE SITE OF WORK.
2. IN CASE OF CONFLICT, THE MORE STRINGENT REQUIREMENTS SHALL GOVERN
3. TYPICAL DETAILS SHALL APPLY UNLESS SHOWN OTHERWISE IN THE DRAWINGS.
4. NO STRUCTURAL MEMBERS SHALL BE CUT, NOTCHED OR OTHERWISE PENETRATED UNLESS SPECIFICALLY APPROVED BY THE STRUCTURAL ENGINEER IN ADVANCE OR AS SHOWN ON THESE DRAWINGS.
5. THE STANDARD OF CARE FOR ALL PROFESSIONAL ENGINEERING, AND RELATED SERVICES PERFORMED OF FURNISHED BY FELTEN GROUP, WILL BE THE CARE AND SKILL ORDINARILY USED BY MEMBERS OF THE SUBJECT PROFESSION PRACTICING UNDER SIMILAR CIRCUMSTANCES AT THE SAME TIME AND IN THE SAME LOCALITY. FELTEN GROUP MAKES NO WARRANTIES, EXPRESS OR IMPLIED, OR OTHERWISE, IN CONNECTION WITH FELTEN GROUP'S SERVICES. FELTEN GROUP AND ITS CONSULTANTS MAY USE OR RELY UPON THE DESIGN SERVICES OF OTHERS, INCLUDING, BUT NOT LIMITED TO, ENGINEERS, ARCHITECTS, DESIGNERS, CONTRACTORS, MANUFACTURERS, AND SUPPLIERS.
6. ALL DESIGN DOCUMENTS PREPARED OR FURNISHED BY FELTEN GROUP ARE INSTRUMENTS OF SERVICE, AND FELTEN GROUP RETAINS OWNERSHIP AND PROPERTY INTEREST (INCLUDING THE COPYRIGHT) IN SUCH DOCUMENTS, WHETHER OR NOT THE PROJECT IS COMPLETED. CLIENT SHALL NOT REUSE THE DOCUMENTS WITHOUT WRITTEN PERMISSION FROM FELTEN GROUP.
7. THE CONTRACTOR, NOT FELTEN GROUP, IS RESPONSIBLE FOR THE CONSTRUCTION OF THE PROJECT, AND FELTEN GROUP IS NOT RESPONSIBLE FOR THE ACTS OR OMISSIONS OF ANY CONTRACTOR, SUBCONTRACTOR OR MATERIAL SUPPLIER: FOR SAFETY PRECAUTIONS, PROGRAMS OR ENFORCEMENT; OR FOR CONSTRUCTION MEANS, METHODS, TECHNIQUES, SEQUENCES AND PROCEDURES EMPLOYED BY THE CONTRACTOR. FELTEN GROUP SHALL NOT AT ANY TIME SUPERVISE, DIRECT, OR HAVE CONTROL OVER ANY CONTRACTORS WORK
8. FELTEN GROUP NEITHER GUARANTEES THE PERFORMANCE OF ANY CONTRACTOR NOR ASSUMES RESPONSIBILITY FOR ANY CONTRACTOR'S FAILURE TO FURNISH AND PERFORM ITS WORK IN ACCORDANCE WITH THE CONTRACT BETWEEN CLIENT AND SUCH CONTRACTOR.
9. FELTEN GROUP WILL NOT HAVE CONTROL OVER NOR BE NEITHER RESPONSIBLE NOR LIABLE IN ANY WAY FOR SAFETY PROCEDURES, SAFETY TRAINING AND PROGRAMS OR OTHER SAFETY RELATED ASPECTS OF THE WORK OF THE PROJECT SINCE THESE ARE THE SOLE RESPONSIBILITY OF THE CONTRACTOR.
10. WALL HEIGHT SHOWN BASED ON ACTUAL 8" TALL BLOCK HEIGHT
11. TOP OF FENCE SHALL NOT STEP BETWEEN PILASTERS

SUBSTITUTIONS

1. ALL PRODUCT SUBSTITUTIONS SHALL BE SUBMITTED TO THE ENGINEER FOR REVIEW PRIOR TO CONSTRUCTION. CONTRACTOR TO SUBMIT DOCUMENTATION TO DEMONSTRATE THAT THE PROPOSED SUBSTITUTION IS EQUAL TO THE SPECIFIED PRODUCT. PRODUCT SUBSTITUTIONS MAY BE USED PROVIDED THEY ARE APPROVED BY THE ENGINEER OF RECORD IN WRITING.

SPECIAL INSPECTION

1. SPECIAL INSPECTION SHALL BE PROVIDED AS REQUIRED BY THE LOCAL BUILDING OFFICIAL

DRAFT

Maricopa Association of Governments Building Code Amendments and Standards Manual BCAS #16	
Title: **2012 IECC/IRC Residential Testing Protocols**	MARICOPA ASSOCIATION of GOVERNMENTS **BCAS Manual**
Originally Reviewed by MAG Building Codes Committee: **1/16/2013**	
Updated by MAG Building Codes Committee: **none**	

2012 IRC

Add Section N1102.1.2

N1102.1.2 RESNET Testing & Inspection Protocol. The Residential Energy Services Network (RESNET) Mortgage Industry National Home Energy Rating System Standards Protocol for third party testing and inspections shall be deemed to meet the requirements of sections N1102.4.1.1, N1102.4.1.2 and N1103.2.2 and shall meet the following conditions:

1. Third Party Testing and Inspections shall be completed by RESNET certified Raters or Rating Field Inspectors and shall be subject to RESNET Quality Assurance Field Review procedures.
2. Sampling in accordance with Chapter 6 of the RESNET Standards shall be performed by Raters or Rating Field Inspectors working under a RESNET Accredited Sampling Provider.
3. Third Party Testing is required for the following items:
   a. N1102.4.1.1 –Building Envelope – Thermal and Air Barrier Checklist
   b. N1102.4.1.2 –Testing – Air Leakage Rate
   c. N1103.2.2 – Sealing – Duct Tightness
4. The other requirements identified as “mandatory” in Chapter 4 shall be met.
5. Alternate testing and inspection programs and protocols shall be allowed when approved by the Code Official.

2012 IECC

Add Section R102.1.2

R102.1.2 RESNET Testing & Inspection Protocol. The Residential Energy Services Network (RESNET) Mortgage Industry National Home Energy Rating System Standards Protocol for third party testing and inspections shall be deemed to meet the requirements of sections R402.4.1.1, R402.4.1.2 and R403.2.2 and shall meet the following conditions:

1. Third Party Testing and Inspections shall be completed by RESNET certified Raters or Rating Field Inspectors and shall be subject to RESNET Quality Assurance Field Review procedures.
2. Sampling in accordance with Chapter 6 of the RESNET Standards shall be performed by Raters or Rating Field Inspectors working under a RESNET Accredited Sampling Provider.
3. Third Party Testing is required for the following items:
   d. R402.4.1.1 –Building Envelope – Thermal and Air Barrier Checklist
   e. R402.4.1.2 –Testing – Air Leakage Rate
   f. R403.2.2 – Sealing – Duct Tightness
4. The other requirements identified as “mandatory” in Chapter 4 shall be met.
5. Alternate testing and inspection programs and protocols shall be allowed when approved by the Code Official.

DRAFT