CITY OF PEORIA
STANDARD DETAIL PE-241-1
SIDEWALK RAMP NOTES

APPROVALS: 3/27/12
CITY ENGINEER DATE

NOTES:

1. CONTROL ELEVATIONS SHOWN ARE IN RELATION TO THE GUTTER AND ARE LOCATED RADIALLY. GUTTER ELEVATION = 0". RAMP CURBS SHALL BE FLUSH WITH GUTTER PAN WHERE INDICATED AT 0" AS WELL.

2. CONCRETE CURB AND GUTTER AT CURB RETURNS WITH RAMPS SHALL BE M.A.G. CLASS A. CONCRETE SIDEWALK AND RAMPS AT CURB RETURNS SHALL BE M.A.G. CLASS A. SUBGRADE PREPARATION SHALL BE PER MAG SPECIFICATIONS.

3. RAMP CURBS MAY BE POURED MONOLITHIC WITH A CONSTRUCTION JOINT.

4. EXPANSION JOINT FILLER SHALL BE 1/2" BITUMINOUS TYPE PREFORMED EXPANSION JOINT FILLER A.S.T.M. D-1751, INSTALLED AS SHOWN ON MAG DETAIL 230.

5. RAMP LANDINGS SHALL BE 8'-10' FOR MULTI-USE PATH CROSSINGS.

6. CONCRETE SHALL BE 9" THICK FOR ALL RAMPS ON ARTERIAL AND COLLECTOR STREET (OR OTHER LOCATIONS WHERE INDUSTRIAL/TRUCK TRAFFIC IS ANTICIPATED) AND 5" THICK FOR RAMPS ON ONLY LOCAL STREETS. THIS CONCRETE THICKNESS APPLIES TO RAMPS, LANDINGS, WINGS, AND ALL SIDEWALKS FROM PC TO PC.

7. SIDEWALK LOCATED BETWEEN BACK OF WALK AND RAMP SHALL BE 4', MINIMUM.

8. DUAL RAMPS TO BE INSTALLED AT ALL INTERSECTIONS ALONG ARTERIAL AND COLLECTOR STREETS, OR WHERE HIGH PEDESTRIAN VOLUMES ARE ANTICIPATED.

9. RAMPS MAY BE ROTATED AS NECESSARY TO PROVIDE SHORTEST TRAVEL PATH.

10. TRUNCATED DOMES MUST ALIGN ON BOTH SIDES OF THE CROSSING.

11. SOME MODIFICATION OF THE RAMP DETAILS WILL BE NECESSARY TO ACCOMMODATE CITY OF PEORIA SIDEWALK WIDTH REQUIREMENTS OR TO ALIGN RAMPS AND TRUNCATED DOMES.

12. TRUNCATED DOMES ARE TO BE *StrongGo* OR PREVIOUSLY APPROVED EQUAL.

13. TRAFFIC SIGNAL POLE FOUNDATIONS SHOULD BE FLUSH WITH SIDEWALK/RAMP LANDINGS WHEN POSSIBLE.

14. SIDEWALKS, RAMPS, AND LANDINGS SHOULD GENERALLY FOLLOW THE CONTOURS OF THE SURROUNDING AREA TO ENSURE SLOPE REQUIREMENTS ARE MET.

CITY OF PEORIA
STANDARD DETAIL PE-241-2
STANDARD CURB RAMP (SLOPES)
FOR ARTERIAL AND COLLECTOR STREETS

APPROVALS:

CITY ENGINEER — DATE 3/27/12

ELEMENT	RUNNING SLOPE		CROSS SLOPE	
	PREF	MAX	PREF	MAX
A	–	8.33%	1.5%	2%
B	–	8.33%	8.33%	10%
C	1.5%	2%	1.5%	2%
D	1.5%	5%	1.5%	2%

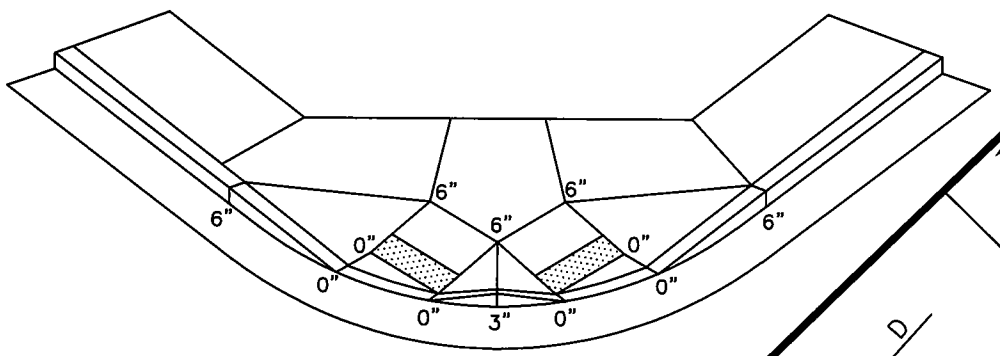

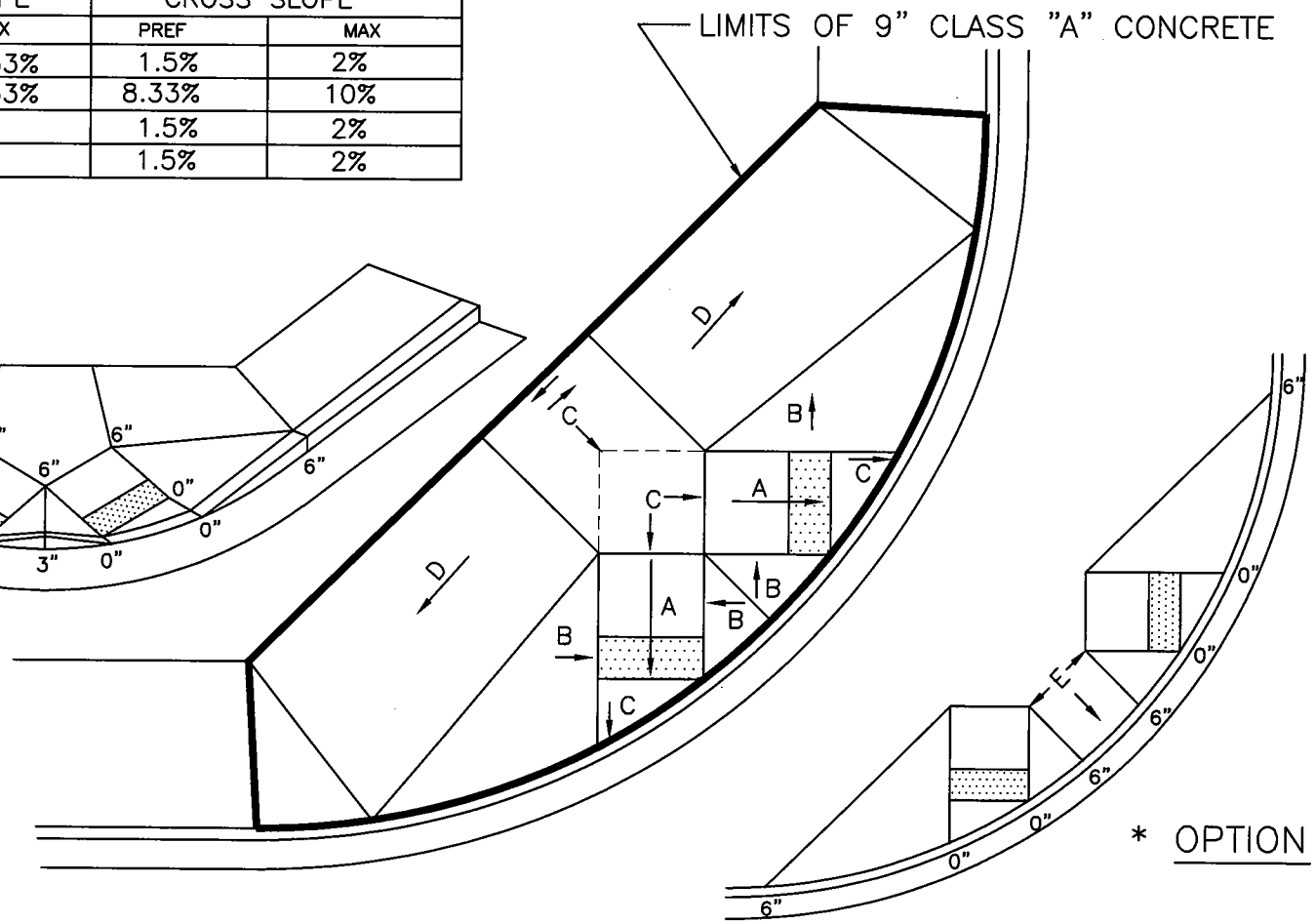

* POSITION OF EACH RAMP MAY SHIFT TO ALIGN WITH RAMP ON OPPOSITE SIDE

CITY OF PEORIA
STANDARD DETAIL PE-241-3
STANDARD DUAL CURB RAMP (DIMENSIONS) FOR ARTERIAL AND COLLECTOR STREETS

APPROVALS:

CITY ENGINEER — DATE 3/27/12

DIMENSION TABLE						
Radius (FC)	A (ft)	B (ft)	C (ft)	D (ft)	E (ft) BC–BW (APPROX)	F (ft)
20	5' PREF 4' MIN	6' MIN	5' MAX	6' PREF 4' MIN	13.5' PREF 11.5' MIN	4' MIN
25	5' PREF 4' MIN	6' MIN	5' MAX	6' PREF 5' MIN	14' PREF 12' MIN	4' MIN
30	5' PREF 4' MIN	6' MIN	5' MAX	8' PREF 5' MIN	16' PREF 13' MIN	4' MIN
35	5' PREF 4' MIN	6' MIN	5' MAX	8' PREF 5' MIN	16' PREF 13' MIN	4' MIN

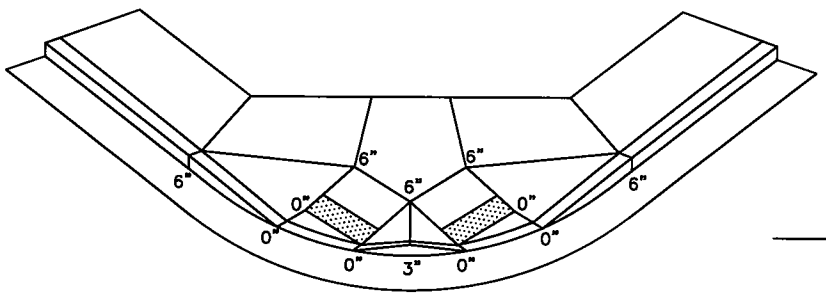

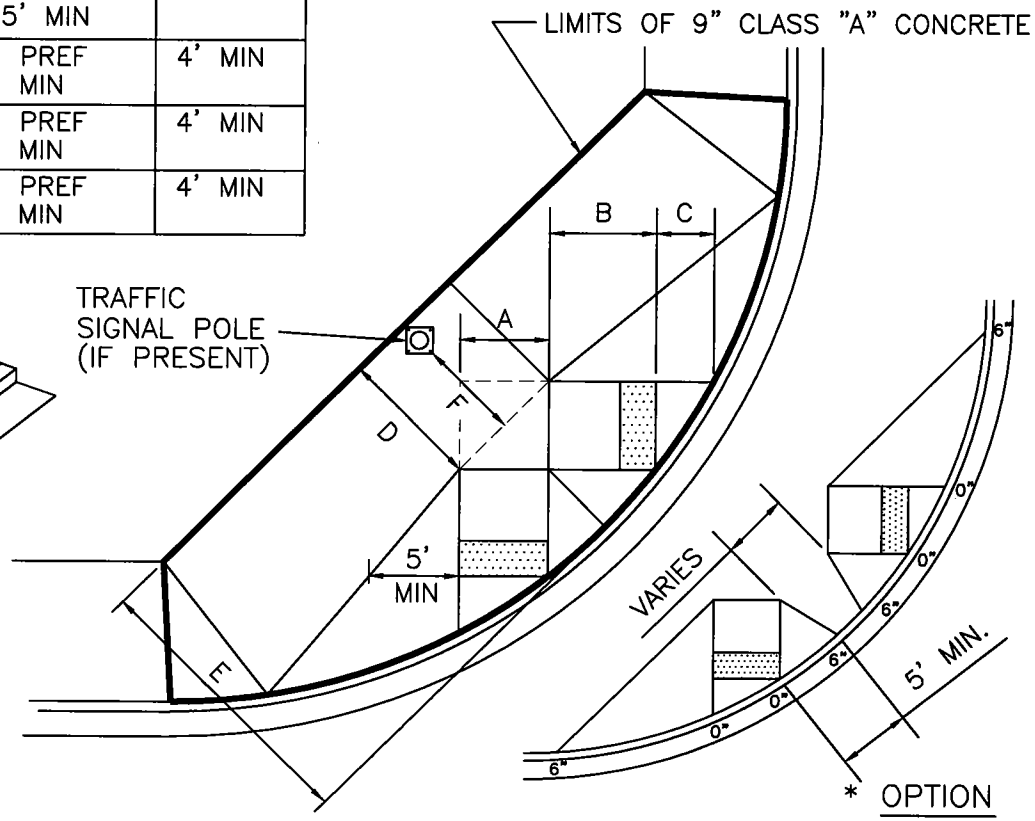

* POSITION OF EACH RAMP MAY SHIFT TO ALIGN WITH RAMP ON OPPOSITE SIDE

CITY OF PEORIA
STANDARD DETAIL PE-241-4
STANDARD DUAL CURB RAMP (DIMENSIONS) FOR ARTERIAL AND COLLECTOR STREETS

APPROVALS:

CITY ENGINEER — DATE 3/27/12

DIMENSION TABLE				
Radius(FC)	A(ft)	B(ft)	C(ft)	E(ft)
20	5' PREF 4' MIN	6' MIN	5' MAX	6' PREF 4' MIN
25	5' PREF 4' MIN	6' MIN	5' MAX	6' PREF 5' MIN
30	5' PREF 4' MIN	6' MIN	5' MAX	8' PREF 5' MIN
35	5' PREF 4' MIN	6' MIN	5' MAX	8' PREF 5' MIN

LS = LANDSCAPING

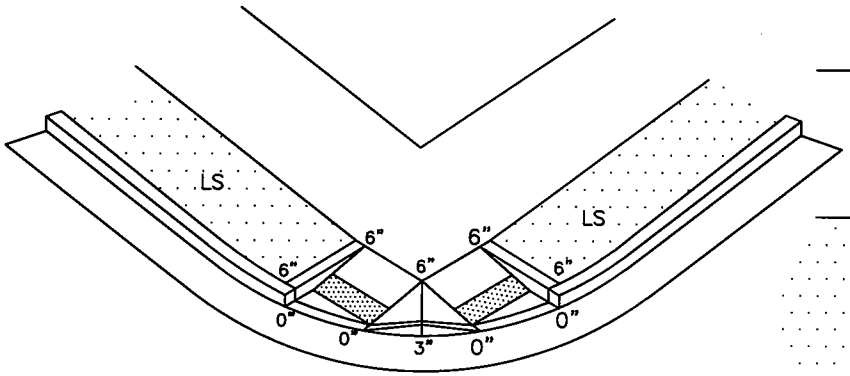

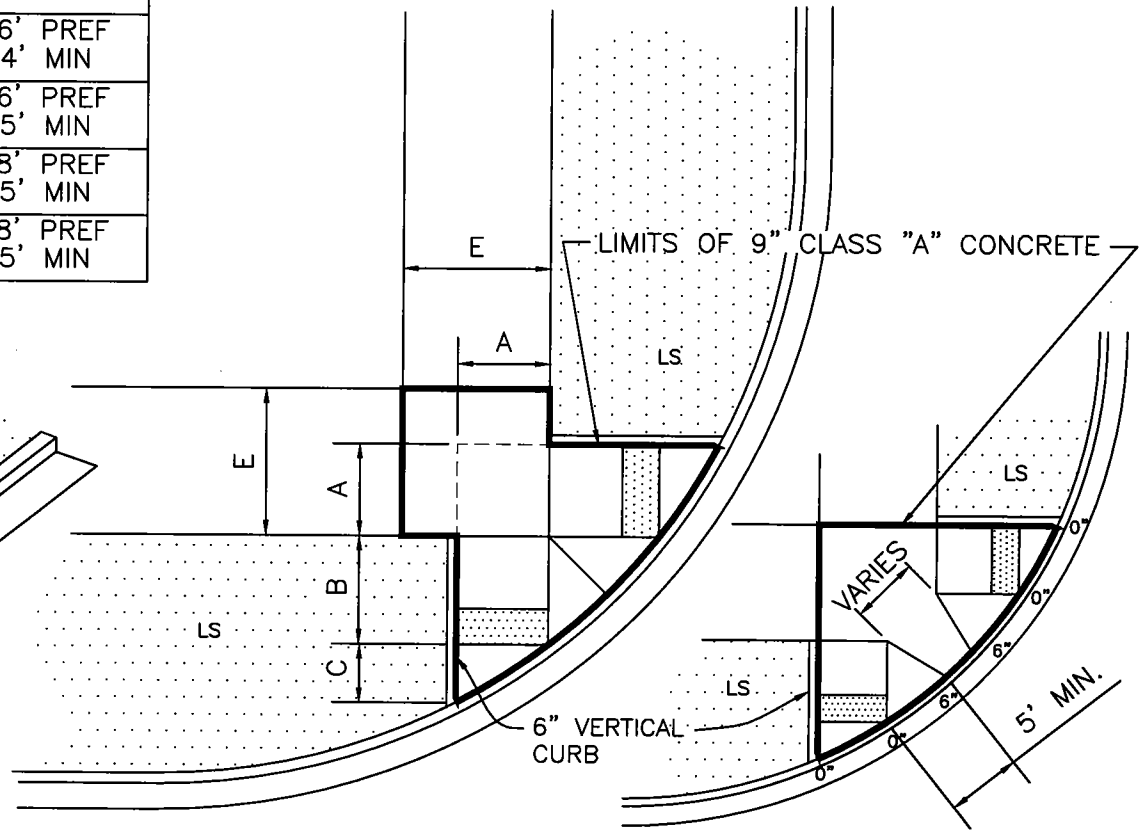

* POSITION OF EACH RAMP MAY SHIFT TO ALIGN WITH RAMP ON OPPOSITE SIDE.

* OPTION

CITY OF PEORIA
STANDARD DETAIL PE-241-5
STANDARD SINGLE CURB RAMP (DIMENSIONS) FOR ARTERIAL AND COLLECTOR STREETS

APPROVALS: 3/27/12

CITY ENGINEER DATE

DIMENSION TABLE					
Radius (FC)	A (ft)	B (ft)	C (ft)	D (ft)	E (ft) BC-BW (APPROX)
20	5' PREF 4' MIN	6' MIN	5' MAX	6' PREF 4' MIN	13.5' PREF 11.5' MIN
25	5' PREF 4' MIN	6' MIN	5' MAX	6' PREF 5' MIN	14' PREF 12' MIN
30	5' PREF 4' MIN	6' MIN	5' MAX	8' PREF 5' MIN	16' PREF 13' MIN
35	5' PREF 4' MIN	6' MIN	5' MAX	8' PREF 5' MIN	16' PREF 13' MIN

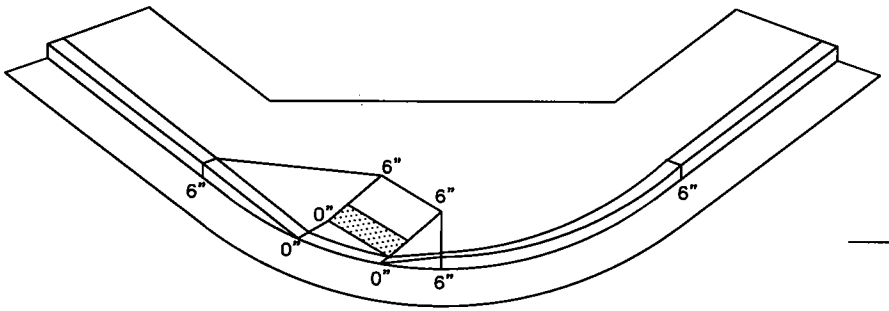

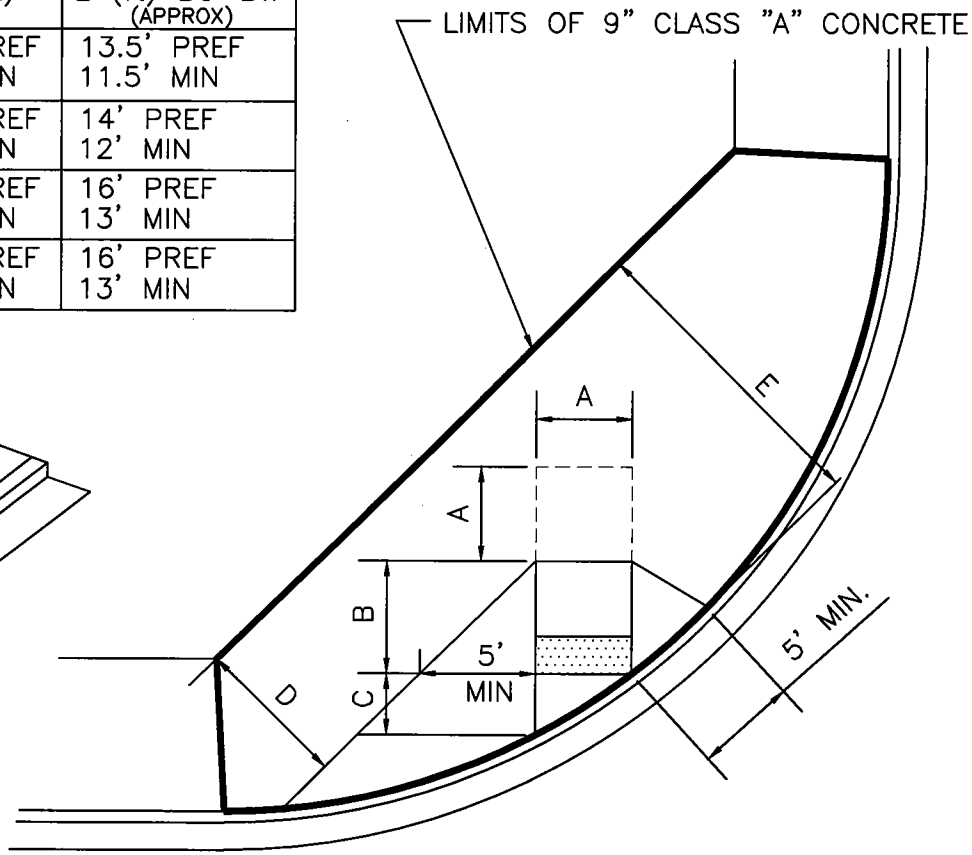

CITY OF PEORIA
STANDARD DETAIL PE-241-6
STANDARD SINGLE CURB RAMP (DIMENSIONS) FOR ARTERIAL AND COLLECTOR STREETS

APPROVALS:

CITY ENGINEER — DATE 3/27/12

DIMENSION TABLE				
Radius(FC)	A(ft)	B(ft)	C(ft)	E(ft)
20	5' PREF 4' MIN	6' MIN	5' MAX	6' PREF 4' MIN
25	5' PREF 4' MIN	6' MIN	5' MAX	6' PREF 5' MIN
30	5' PREF 4' MIN	6' MIN	5' MAX	8' PREF 5' MIN
35	5' PREF 4' MIN	6' MIN	5' MAX	8' PREF 5' MIN

LS = LANDSCAPING

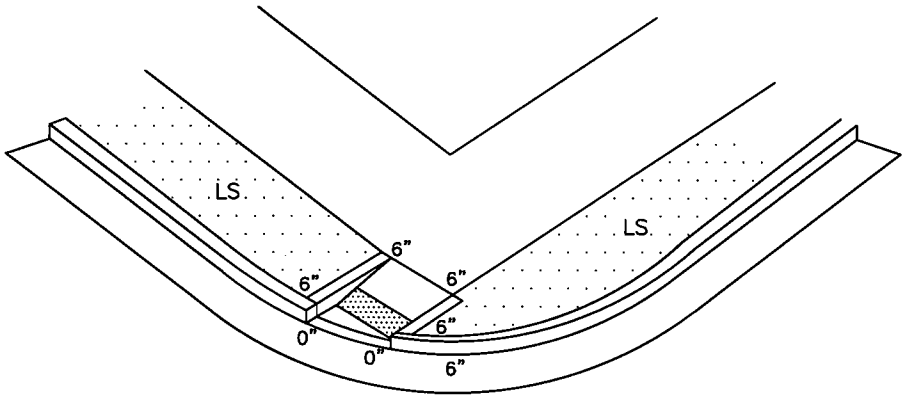

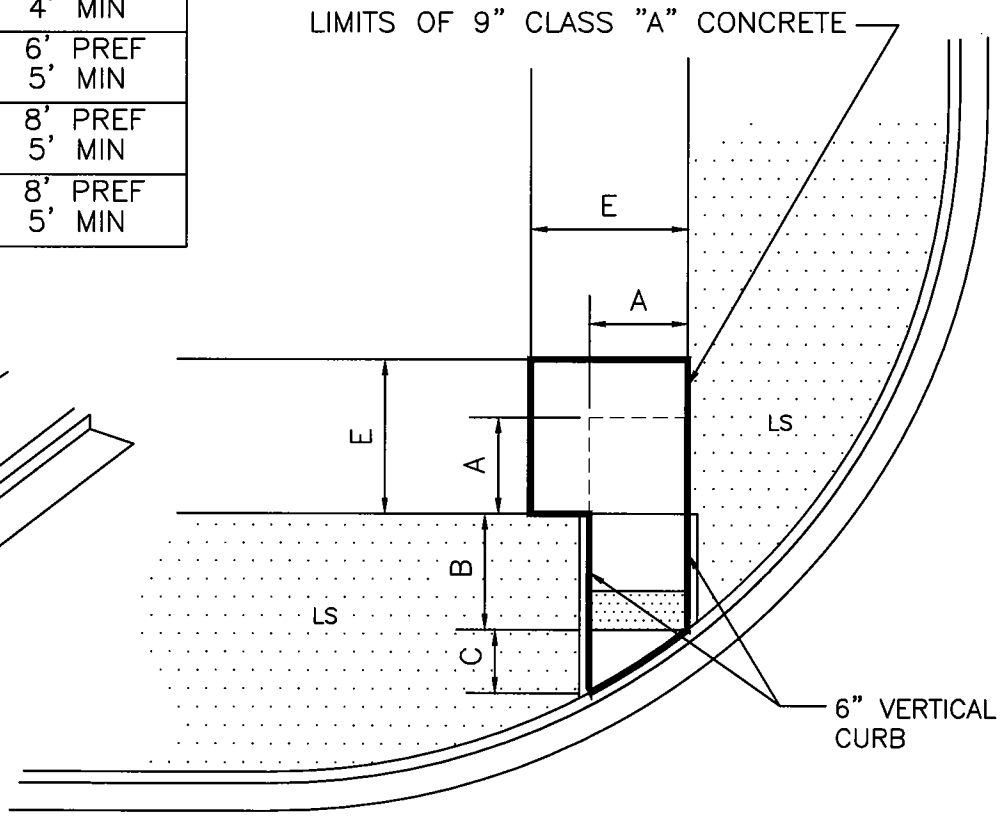

CITY OF PEORIA
STANDARD DETAIL PE-241-8
COMPACT RAMP (SLOPES)
FOR ARTERIAL AND COLLECTOR STREETS

APPROVALS:

CITY ENGINEER — DATE 3/27/12

ELEMENT	RUNNING SLOPE		CROSS SLOPE	
	PREF	MAX	PREF	MAX
A	–	8.33%	1.5%	2%
B	–	8.33%	8.33%	10%
C	1.5%	2%	1.5%	2%
D	5%	8.33%	1.5%	2%

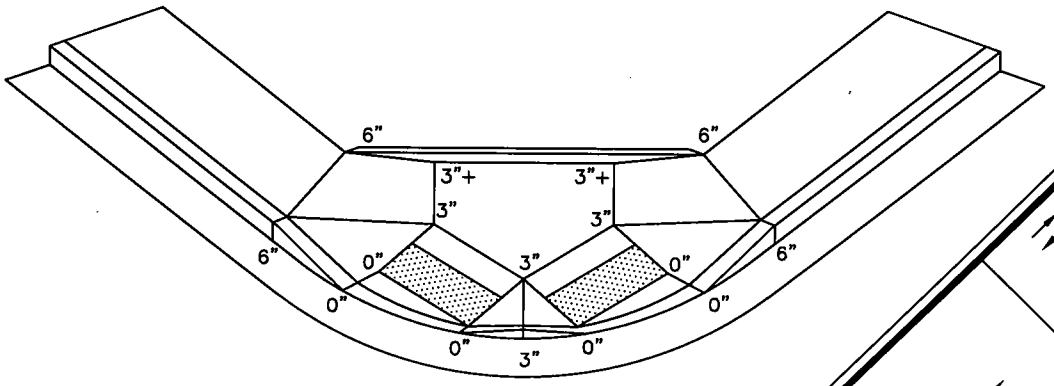

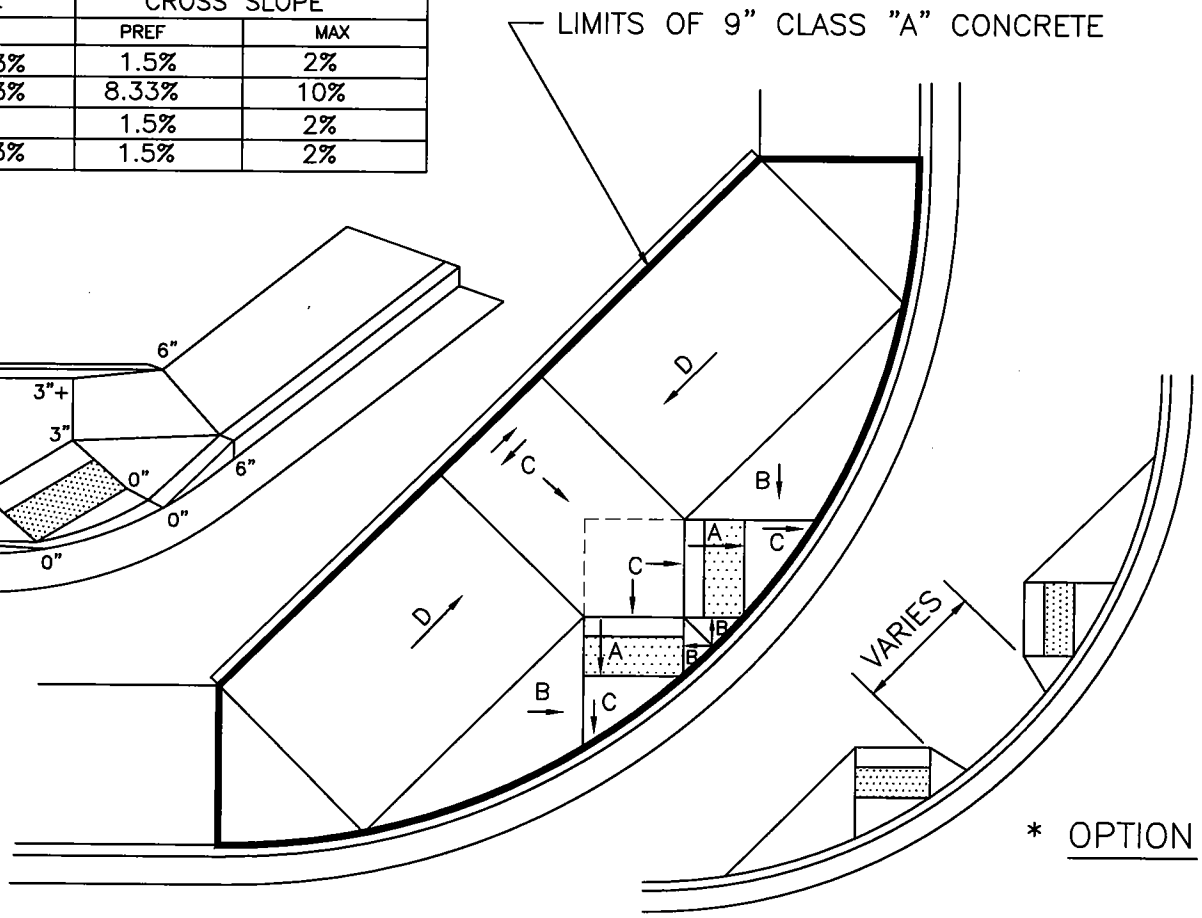

* POSITION OF EACH RAMP MAY SHIFT TO ALIGN WITH RAMP ON OPPOSITE SIDE

CITY OF PEORIA
STANDARD DETAIL PE-241-9
COMPACT DUAL CURB RAMP (DIMENSIONS) FOR ARTERIAL AND COLLECTOR STREETS

APPROVALS:

CITY ENGINEER — DATE 3/27/12

DIMENSION TABLE						
Radius (FC)	A (ft)	B (ft)	C (ft)	D (ft)	E (ft) BC–BW (APPROX)	F (ft)
20	5' PREF 4' MIN	4' MIN	5' MAX	6' PREF 4' MIN	12' PREF 10' MIN	4' MIN
25	5' PREF 4' MIN	4' MIN	5' MAX	6' PREF 5' MIN	12' PREF 11' MIN	4' MIN
30	5' PREF 4' MIN	4' MIN	5' MAX	8' PREF 5' MIN	14' PREF 11' MIN	4' MIN
35	5' PREF 4' MIN	4' MIN	5' MAX	8' PREF 5' MIN	14' PREF 11' MIN	4' MIN

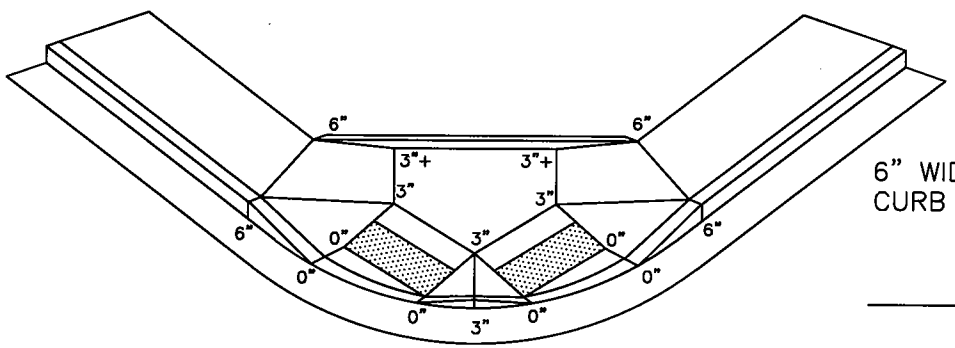

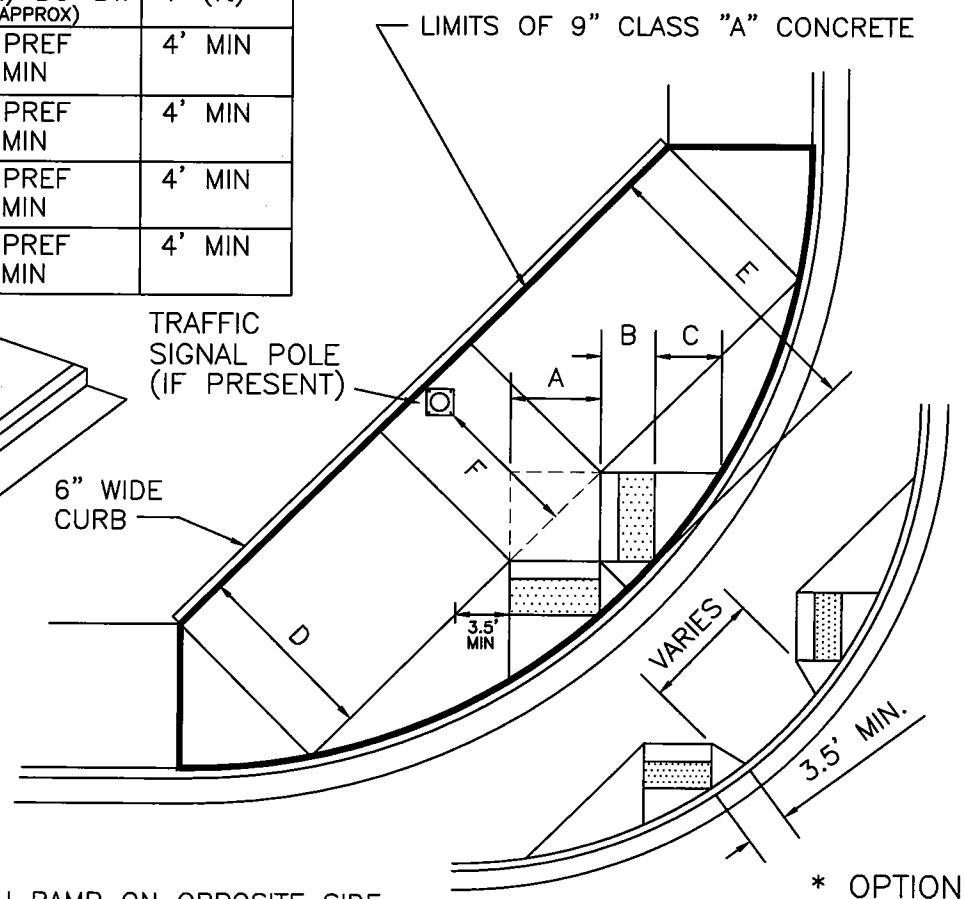

* POSITION OF EACH RAMP MAY SHIFT TO ALIGN WITH RAMP ON OPPOSITE SIDE

* OPTION

CITY OF PEORIA
STANDARD DETAIL PE-241-10
COMPACT SINGLE CURB RAMP (SLOPES)
FOR ARTERIAL AND COLLECTOR STREETS

APPROVALS:

CITY ENGINEER — DATE 3/23/12

ELEMENT	RUNNING SLOPE		CROSS SLOPE	
	PREF	MAX	PREF	MAX
A	–	8.33%	1.5%	2%
B	–	8.33%	8.33%	10%
C	1.5%	2%	1.5%	2%
D	5%	8.33%	1.5%	2%

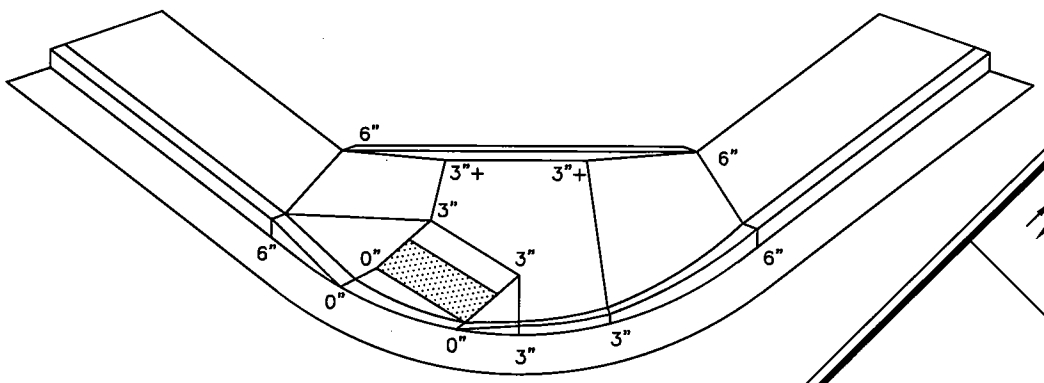

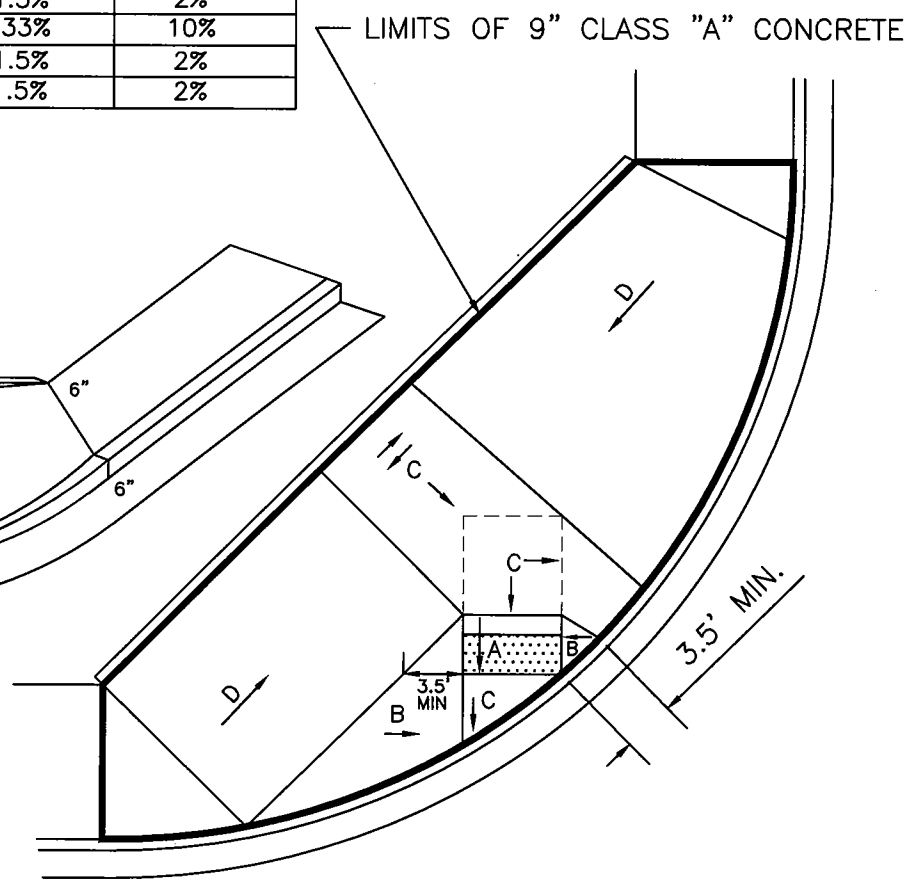

CITY OF PEORIA
STANDARD DETAIL PE-241-11
COMPACT SINGLE CURB RAMP (DIMENSIONS) FOR ARTERIAL AND COLLECTOR STREETS

APPROVALS:

CITY ENGINEER — DATE 3/23/12
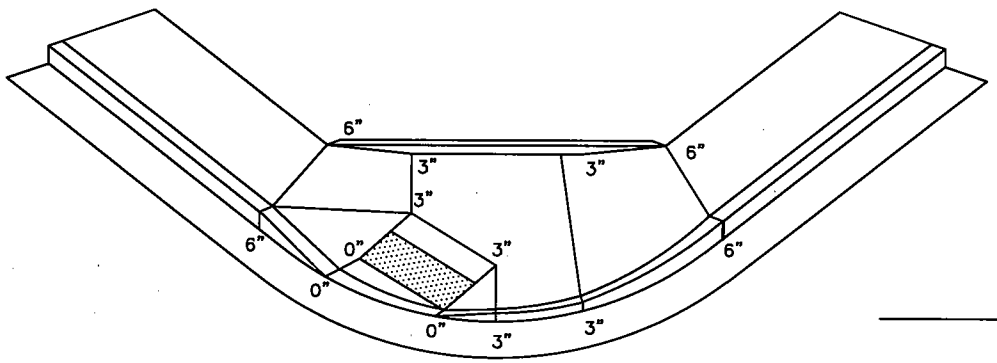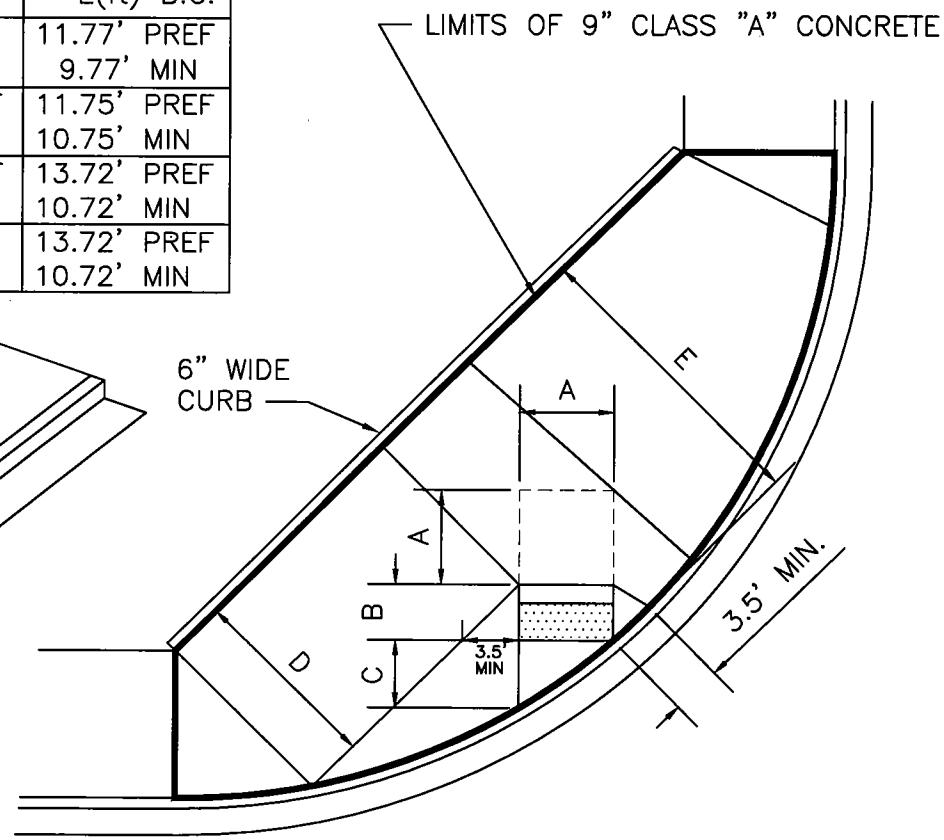
DIMENSION TABLE					
Radius(FC)	A(ft)	B(ft)	C(ft)	D(ft)	E(ft) B.C.
20	4'	4' MIN	0' MIN 5' MAX	6' PREF 4' MIN	11.77' PREF 9.77' MIN
25	5'	4' MIN	0' MIN 5' MAX	6' PREF 5' MIN	11.75' PREF 10.75' MIN
30	5'	4' MIN	0' MIN 5' MAX	8' PREF 5' MIN	13.72' PREF 10.72' MIN
35	5'	4' MIN	0' MIN 5' MAX	8' PREF 5' MIN	13.72' PREF 10.72' MIN