July 27, 2011

TO: Members of the MAG Standard Specifications and Details Committee

FROM: Troy Tobiasson, City of Goodyear, Chair

SUBJECT: MEETING NOTIFICATION AND TRANSMITTAL OF TENTATIVE AGENDA

Wednesday, August 3, 2011 at 1:30 p.m.
NOTE: CHANGE OF LOCATION.
Due to remodeling of the MAG second floor offices the meeting will be held at:
Arizona Rock Products Association (ARPA)
916 W Adams St, Ste 1, Phoenix, AZ 85007
Parking is available on the street and in a parking garage across Adams Street.

A meeting of the MAG Specifications and Details Committee has been scheduled for the time and place noted above. Members of the MAG Specifications and Details Committee may attend the meeting in person. A videoconference and/or telephone conference call is not available at this site. If you have any questions regarding the meeting, please contact Committee Chair Troy Tobiasson at 623-882-7979 or Gordon Tyus, MAG staff at 602-254-6300.

In 1996, the Regional Council approved a simple majority quorum for all MAG advisory committees. If the MAG Specifications and Details Committee does not meet the quorum requirement, no action can be taken. Your attendance at the meeting is strongly encouraged.

Pursuant to Title II of the Americans with Disabilities Act (ADA), MAG does not discriminate on the basis of disability in admissions to or participation in its public meetings. Persons with a disability may request a reasonable accommodation, such as a sign language interpreter, by contacting Gordon Tyus at the MAG office. Requests should be made as early as possible to allow time to arrange the accommodation.

It is requested (not required) that written comments on active cases be prepared in advance for distribution at the meeting.

MAG Standard Specifications and Details Committee
TENTATIVE AGENDA
August 3, 2011

	COMMITTEE ACTION REQUESTED
1. Call to Order and Introductions	
2. Call to the Audience An opportunity is provided to the public to address the MAG Specifications and Details Committee on items that are not on the agenda that are within the jurisdiction of MAG, or non-action agenda items that are on the agenda for discussion or information only. Citizens will be requested not to exceed a three minute time period for their comments. A total of 15 minutes will be provided for the Call to the Audience agenda item, unless the committee requests an exception to this limit. Please note that those wishing to comment on agenda items posted for action will be provided the opportunity at the time the item is heard.	2. Information.
3. Approval of July 13, 2011, Meeting Minutes	3. Review and approve minutes of the July 13, 2011 meeting.
Review of 2010 and 2011 Cases	
4. Case 10-05: Revise FOREWORD to clarify use of the MAG Specifications and Details for Public Works Construction document.	4. **Information, discussion and possible action.** Sponsor: Peter Kandaris, SRP
5. Case 11-01: Miscellaneous Corrections A. Correct typographical errors in Table 711-1. B. Correct typographical error in Table 705-1. C. Correct errors in Detail 212. D. Other potential corrections cases.	5. Information and discussion. Sponsors: Bob Herz, Maricopa County and Peter Kandaris, SRP
6. Case 11-02: Add an Asphalt Pavement Safety Edge option to Detail 201.	6. Information and discussion. Sponsor: Bob Herz, Maricopa County
7. Case 11-03: Replace cadmium plated bolts referenced in Section 610.13 with zinc plated bolts as described in ASTM-B633.	7. Information and discussion. Sponsor: Javier Setovich, Peoria
8. Case 11-04: Replace reference to MAG Detail 190 in MAG Section 301 with ASTM D4718. Delete MAG 190.	8. **Information, discussion and possible action.** Sponsor: Peter Kandaris, SRP

9.	Case 11-06: Remove sections and details of the MAG specifications that are no longer used or refer to outdated technologies.	9. Information and discussion. Sponsor: Scott Zipprich, Buckeye
10.	Case 11-07: Revise Section 327 Hot In-Place Recycling.	10. **Information, discussion and possible action.** Sponsor: Jeff Benedict, AGC
11.	Case 11-08: Revise Section 711 Paving Asphalt to update performance tables and reference AASHTO standards.	11. **Information, discussion and possible action.** Sponsor: Jeff Benedict, AGC
12.	Case 11-09: Preservative Seal for Asphalt Concrete – Revise sections 334 and 718.	12. **Information, discussion and possible action.** Sponsor: Jeff Benedict, AGC
13.	Case 11-10: Curb Ramp Modification for Radial Installations– Create new detail 234. Revise details 235-1, 235-2 and 235-3.	13. Information and discussion. Sponsor: Bob Herz, MCDOT
14.	Case 11-11: Superseded ASTM Specifications: A. Nuclear Density Testing of Soil. B. ASTM Reference for Chain Link Fence	14. Information and discussion. Sponsor: Peter Kandaris, SRP
15.	Case 11-13: Replace Manhole Frame and Cover Details 423, 424 and 523 with new updated versions.	15. **Information, discussion and possible action.** Sponsor: Scott Zipprich, Buckeye
16.	Case 11-14: Update Fire Hydrant Detail 360, and Add Wet Barrel Option and Details.	16. Information and discussion. Sponsor: Scott Zipprich, Buckeye
17.	Case 11-15: Modifications to Residential Speed Hump Detail 210. See item 20.	17. Information and discussion. Sponsor: Warren White, Chandler
18.	Cases 11-16 through 11-19 Cases submitted by the Outside ROW Working Group including: Steel Flexible Metal Guardrail, Steel and Aluminum Handrails, Removal of Exisiting Improvements and Detectable Warnings.	18. Information and discussion. Sponsor: Peter Kandaris, SRP

19.	Case 11-20 Update specifications for water line construction materials to meet federal low lead standards.	19. Information and discussion. Sponsor: Warren White, Chandler
20.	Case 11-21 Add new Section 623: Special Bedding for Mainline Storm Drain Pipe.	20. Information and discussion. Sponsor: Syd Anderson, Phoenix
21.	Cases 11-22 through 11-28 Cases submitted by the Asphalt Working Group.	21. Information and discussion. Sponsor: Jeff Benedict, AGC
22.	Cases 11-29 through 11-35 Cases submitted by the Materials Working Group.	22. Information and discussion. Sponsor: Brian Gallimore, AGC
General Discussion		
23.	Working Group Reports **A. Outside Right-of-Way Working Group** Report on 7/27/2011 meeting. **B. Asphalt Working Group** Summary of activities. **C. Materials Working Group** Summary of activities. **D. Water/Sewer Working Group** Report on 7/19/2011 meeting. **E. Concrete Working Group** Report on 7/20/2011 meeting	23. Information and discussion. A. Outside ROW Chair: Peter Kandaris, SRP B. Asphalt Chair: Jeff Benedict, AGC C. Materials Chair: Brian Gallamore, AGC D. Water/Sewer Chair: Jim Badowich, Avondale E. Concrete Chair: Jeff Hearne, ARPA
24.	Staff Reports Report on room location for September meeting. MAG committee Chair and Vice Chair procedures.	24. Information and discussion.
25.	Open General Discussion Members can report on any items of interest to the committee.	25. Information and discussion.
26.	Request for Future Agenda Items Topics or issues of interest that the Standard Specifications and Details Committee would like to have considered for discussion at a future meeting will be requested.	26. Information and discussion.
	Adjournment	

MEETING MINUTES FROM THE MARICOPA ASSOCIATION OF GOVERNMENTS STANDARD SPECIFICATIONS AND DETAILS COMMITTEE

July 13, 2011

Held at the Arizona Rock Products Association (ARPA) Office
916 W. Adams St. Phoenix, AZ 85007

AGENCY MEMBERS

Jim Badowich, Avondale
Scott Zipprich, Buckeye
Warren White, Chandler
* Dave Emon, El Mirage
Greg Crossman, Gilbert
Tom Kaczmarowski, Glendale
Troy Tobiasson, Goodyear, Chair
Bob Herz, MCDOT
* Mike Samer, Mesa
* Javier Setovich, Peoria
Syd Anderson, Phoenix (St. Trans.)
Jami Erickson, Phoenix (Water)
* Marc Palichuk, Queen Creek
Rodney Ramos, Scottsdale
* Jason Mahkovtz, Surprise
Tom Wilhite, Tempe, Vice Chair

ADVISORY MEMBERS

Jeff Benedict, AGC
Tony Braun, NUCA
* Kwigs Bowen, NUCA
Brian Gallimore, AGC
Jeff Hearne, ARPA
Peter Kandaris, SRP (via video)
Paul R. Nebeker, Independent
* Mike Smith, ARPA

MAG ADMINISTRATIVE STAFF

Gordon Tyus

* Members not attending or represented by proxy.

GUESTS/VISITORS

Arturo Chavarria, Hanson Pipe and Precast
Michael Neill, Infra-tect, LLC (NUCA)
Mo Rahman, ATC Associates (ARPA)
Jeff Raleigh, Blucor Contracting
Niranjan Vescio, Stronggo

1. Call to Order

   Chairman Troy Tobiasson called the meeting to order at 1:46 p.m.

2. Call to the Audience

   No members of the audience requested to address the committee.

3. Approval of Minutes

   The members reviewed the June 1, 2011 meeting minutes. Warren White introduced a motion to accept the minutes as written. Scott Zipprich seconded the motion. A voice vote of all ayes and no nays was recorded.

Review of 2010 and 2011 Cases

4. Case 10-05 – Revise FOREWORD

   Clarify use of the MAG Specifications and Details for Public Works document. Peter Kandaris said the final version was included in the packet, which basically added three paragraphs to the current Foreword. Mr. Tyus said there has not been a legal review. Mr. Kandaris noted in the second paragraph that 'climes' is an appropriate word for multiple climates. There were several comments on removing the references to private contractors, to avoid confusion since the document is being for public works projects. Mr. Kandaris said he could make the revisions and proposed to vote on the case at the August 3rd meeting.

5. Case 10-08 – Revise Section 717 Asphalt Rubber

   Revise Section 717 ASPHALT-RUBBER to obtain a uniform specification. Bob Herz said since the Asphalt Working Group was introducing more extensive changes to Section 717 in a new case, he proposed to withdraw this case, and make sure Maricopa County's concerns were addressed in the new draft case. (Later introduced as Case 11-22.)

6. Case 11-01: Miscellaneous Corrections

   a. **Case 11-01A – Correct the formula in Table 711-1.** No new comments provided.
   b. **Case 11-01B – Correct percentage in Table 705-1.** No new comments provided.
   c. **Case 11-01C – Correct reference in Detail 12.** No new comments provided.
   d. No new corrections were submitted.

   Mr. Tobiasson noted that new cases addressed these same sections, but that it would be a good idea to make the corrections here, in case the other revisions are not approved this year. Mr. Herz suggested waiting until September to vote on this case, so additional corrections could be added if necessary.

7. Case 11-02 – Safety Edge Detail

   Add an Asphalt Pavement Safety Edge option to Detail 201. Bob Herz said this case is still under review at the county, but additional changes are expected later.

8. Case 11-03 – Replace Cadmium Plated Bolts.

   Replace cadmium plated bolts referenced in Section 610.13 with zinc plated bolts as described in ASTM-B633. Javier Setovich was not in attendance but did provide a progress report memo addressing issues of health effects, quality of materials, and effects on the environment of cadmium bolts. The interim conclusion was the results did not currently warrant changing the specification. Since this conclusion was in opposition to the initial case, members discussed that even if replacing cadmium bolts was not necessary, it still may be a good idea to provide additional options for zinc, nickel or stainless steel bolts as long as they meet performance and corrosion requirements. Jami Erickson said Phoenix prefers stainless steel. Paul Nebeker noted that when making repairs, you typically do not remove the bolts anyway. Members agreed to continue research on developing a performance-based standard, and to get input from the Water/Sewer Working Group.

9. Case 11-04 – Deletion of Detail 190, Rock Correction Procedure

   Replace reference to MAG Detail 190 in MAG Section 301. Delete MAG Detail 190. Peter Kandaris asked for comments on the case, and suggested to schedule it for a vote at the next committee meeting.

10. Case 11-05 – Deletion of MAG Section 225, Watering

    Move MAG Section 225, Water Requirements into MAG Section 104.1.3. Peter Kandaris said no changes we made and called for a vote. Bob Herz moved and Scott Zipprich seconded a motion to approve Case 11-05 as presented. The case passed: 10 yes, 0 no, 0 abstain and 5 not present.

11. Case 11-06 – Deletion of Out of Date MAG Standards

    Remove sections and details that are no longer used or refer to outdated technologies. Scott Zipprich said he had been requested by the Outside ROW Working Group to add *Section 341 Terrazzo Sidewalks* and *Detail 204 Equipment Crossing* to the list of deletions. Terrazzo sidewalks are typically used outside the right-of-way, and could be added to that book in the future. He asked if anyone was still using detail 204 since canal crossing done by the utilities have their own details. Jeff Benedict asked if Section 323 Heater Remix was added, and Mr. Zipprich confirmed that it was included. Mr. Zipprich concluded that he would update the case to include the additional recommendations as well as the sample forms discussed at the previous meeting.

12. Case 11-07 – Revise Section 327: Hot In-Place Recycling

    Update section 327 to current industry standards. Jeff Benedict said there were no changes or comments since the last meeting and asked to vote on the case at the next meeting.

13. Case 11-08 – Revise Section 711: Paving Asphalt

    Update performance tables, references to ASTM standards, and revise Section 711 to meet current practices. Jeff Benedict said the revised specification adds two new binders to the table – a softer grade and a harder grade. Table 711-2 was removed and replaced with temperature limits. The section title also was changed to Asphalt Concrete. He suggested voting on the case at the next meeting.

14. Case 11-09 – Update Preservative Seal for Asphalt Concrete

    Revise Sections 334 and add new 718 to meet current industry materials and practice. Revisions to these sections included adding "plastic seal," "TRMSS" and conventional emulsified asphalts. Petroleum hydrocarbon resins and petroleum resin emulsions were removed because they are difficult to apply to pavements successfully – leading to bleeding and surface texture loss. Mr. Benedict proposed voting on this case at the next meeting.

15. Case 11-10 – Curb Ramp Modification for Radial Installations

    Add new detail 234 and modify existing ramp details to show curb modification. Bob Herz said there had been no changes and planned to include updates for the next meeting.

16. Case 11-11 – ASTM Revisions

    a. **Case 11-11A – Nuclear Density Testing of Soil.**
    b. **Case 11-11B – Chain Link Fence.** Mr. Kandaris introduced an update to an ASTM standard called out in section 772. ASTM A-569 has been replaced with ASTM A1011-10. All other ASTM references were correct. It was suggested to keep this case open until September in case additional ASTM corrections were found.

17. Case 11-12 – Modifications to Regulatory Requirements, MAG 107

    Add references to Arizona native plant requirements and update references to state statutes. Mr. Kandaris said the case needs time for additional progress and possibly a legal review. He suggested the case be carried over to 2012.

18. Case 11-13 – Replace Current Manhole Frame and Cover Details

    Replace Details 423, 424, 523-1 and 523-2 with new details of products that are currently being manufactured. Scott Zipprich said there were no new revisions or comments. Members discussed improvements to the detail drawings. Changes included making the dimension note size consistent and adding the utility type text shown on the bottom half of each cover. Bob

Herz wanted to make sure that the covers are not smooth in the logo area, and this could be clarified with a note. Typically rings are shown on 24" covers and "stipples" on the 30" versions. Mr. Zipprich said he would work with Rita Chihanik of Deeter/Neenah, who provided the draft details to make updates. He also proposed to schedule a vote on the case at the next committee meeting.

2011 New Cases

19. Case 11-14: Update Fire Hydrant Details

Update Detail 360-1, and add Wet Barrel Option (360-2) and Details (360-3). Scott Zipprich said the details were still in a rough draft stage, but he hoped to reduce the number of supplements by adding in most of the requirements and options used by different agencies. The water/sewer group will continue to provide feedback as well. The concrete collar was noted, and Jami Erickson said Phoenix uses concrete bases to keep the hydrants in place if driven into and for erosion resistance. Restrained joints could be used instead of thrust blocks as shown in note 7. Other comments included labeling the height to the pad, and allowing a round pad option. Mr. Zipprich said he also expects to create a plan view that shows required clearances, such as a three to seven foot working area. When asked about adding a hydrant lock detail, he said no, it was not planned to be included, although agencies could add their own detail if they wished.

20. Case 11-15: Modify Residential Speed Hump: Detail 210

Updated speed hump detail to be compliant with MUTCD marking requirements. Warren White said the current MAG detail is not compliant, and provided a new case with the proper markings on the speed hump. He also added a section view for 14' wide road in addition to the 12' section. Scott Zipprich asked about cuts in speed humps. Tom Kaczmarowski of Glendale said they include them at the request of their fire department. A table included in the case outlined the differences between agency details. The speed of traffic based on the size of the humps was also discussed. Bob Herz questioned whether the dimensions could be read to the hundredths of an inch as shown in the section view, and suggested the dimensions be checked for accuracy.

21. Case 11-16: Modify Section 415: Steel Flexible Metal Guardrail

Update Section 415 based on the Maricopa County Supplement. Delete Details 135-1 through 135-4. Peter Kandaris introduced this case based on recommendations of the Outside ROW Working Group. He said the MAG guardrail standards are out-of-date and not followed by MAG agencies. Some details may not be safe to use. The case modifies section 415 largely based on the county supplement, although he suggested it reference ADOT guardrail details when available and delete the details currently in MAG.

22. Case 11-17: Revise Section 520: Steel and Aluminum Handrails

Provide material requirements for aluminum handrails in subsection 520.2, change the title of Detail 145to "Steel Safety Rail" and update the welding references. Peter Kandaris explained that the current title of Section 520 included aluminum handrails, but no specifications were provided. The case adds them, and also clarifies that Detail 145 is for use with steel safety rails only. He also said that the reference to the welding standard was out of date, and would be revised to reference AASHTO/AWS Standard D1.5, Bridge Welding Code.

23. Case 11-18: Update Section 350: Removal of Existing Improvements

Add language in Section 350.2 for utility removal, and payment requirements. Peter Kandaris explained Section 350 needed to include more detailed information on removing utilities. There is no guidance dealing with the backfill of voids left from removal. He also thought that abandonment of utilities should not be permitted unless specified by the agency. Additionally payment for removals should identify specific items to ensure the scope is understood during the bid process. Mr. Kandaris asked for comments and proposed a possible vote in September.

24. Case 11-19: Modify Section 340: Detectable Warnings

Update Detail 360-1, and add Wet Barrel Option (360-2) and Details (360-3). Peter Kandaris introduced Niranjan Vescio, who participated in the Outside ROW meeting, to present updated information on detectable warning specifications. He referred to the case handouts and described the overall rationale, and major sections of the proposed detectable warning specifications. Mr. Vescio said the new spec addresses the areas of color/contrast, materials, strength & performance, and attachment methods. He described the case file that included supporting arguments and a revised section 340.2.1. He noted that although the current spec may meet legal requirements, it did not provide any detailed performance specifications. Mr. Vescio said having high compression strength was necessary to avoid damage and erosion – regular concrete strength is not sufficient. Tom Wilhite commented on problems with the strength of brick pavers. Mr. Vescio said Nevada wrote a position paper recommending 10,000 psi compression strength. He said the recommended strength in the revised spec doesn't exclude most of the detectable warning systems used by the agencies. Jim Badowich also discussed problems with bricks being difficult to install, prone to settlement and gaps. The Metro light rail system had problems with these blocks. Mr. Badowich also asked whether other materials were allowed such as fiberglass. Mr. Vescio noted that language stating, "All detectable warnings shall be approved by the local jurisdictional agency prior to installation." was included. Rod Ramos said cities often have a qualified provider list of approved products. Tom Wilhite asked about the applicability on retrofits such as bridges or crossings for multi-use paths. Members thought that for retrofit and special applications, special plans would be needed. Mr. Herz said retrofits could be done with metal pin replacements for the domes. Mr. Ramos said it typically was easier to remove and replace rather than retrofit an existing ramp. Mr. Badowich agreed.

25. Case 11-20: Update MAG Specifications for Low-lead Brass Water Line Materials

Update MAG specifications (610, 630, 631, 754, 755) referencing brass and bronze water line construction materials to meet new federal low lead standards. Warren White introduced this case based on recommendations from Michael Hinrick of A.Y. McDonald. He noted that the national standards were scheduled to take effect next year. Mr. Tyus said an overview of the NSF/ANSI standards were provided in the addendum packet. Bob Herz asked where the material being made in the USA or Canada is a requirement. Mr. White said he would review and revise the case into a more standard format to clarify the suggested changes.

26. Case 11-21: Add new Section 623: Special Bedding for Mainline Storm Drain Pipe

Incorporate City of Phoenix supplement 623 into the MAG standards. Syd Anderson introduced this case to incorporate the Phoenix supplement into MAG. Mr. Herz asked if it used cement slurry. Jeff Hearne suggested that the specification reference Section 728 for ½ sack slurry. Jim Badowich asked if they had problems with floating pipe. Mr. Anderson said they use an anchoring system using #4 rebar as pins. Mr. Tobiasson, concerned about cost, asked why it should be used. Mr. Anderson said to help avoid problems with settlement issues and difficulty in testing. Paul Nebeker said the thought this initially was done because the original HDPE pipe had problems with low joint strength, but that newer HDPE pipe does not have the degree of problems at the joints. Syd Anderson said they also had problems with ABC breaking the pipe. Mr. Badowich agreed that it was a problem to get in and do testing. Mr. Anderson welcomed additional comments.

Note: All of the following cases were introduced by the Asphalt and Materials Working Groups during the July 13, 2011 meeting. There was limited discussion on each case other than a brief introduction as they were passed out. A summary of each new case is provided below. General discussion following the introduction of the cases included asking agencies to review the cases, and prioritizing those which need to be completed this year, as well as those with minor updates that could also likely be completed and voted on in 2011.

27. Case 11-22: Revise Sections 325 and 717: Asphalt Rubber Specifications

Separate material and construction methods and give guidance to rubber specification. Jeff Benedict handed out the first in a series of new cases developed by the Asphalt and Materials Working Groups. This case incorporates binder issues brought forward by MCDOT, and updates the specifications to current standards. Revisions include: updated required equipment and density procedures; compaction procedures clarified; updated rubber materials along with physical properties.

28. Case 11-23: Revise Section 321: Asphalt Concrete Pavement

Address compaction issues and update Section 321. Jeff Benedict said revisions address differences between mix design limits and production design limits, as well as language corrections.

29. Case 11-24: Add new Section 337: Crack Sealing and Crack Filling

The purpose was to add an updated section with clear limits of its use and scope of crack sealing. A summary received from Jeff Benedict stated: MAG did not have any specifications for crack sealing. Crafco, a major vendor was consulted and helped write the specification. The Asphalt Working Group and agency members reviewed the draft case. This reflects a major change to the MAG specifications.

30. Case 11-25: Update Section 713: Emulsified Asphalt Materials

Update Section 713: Emulsified Asphalt Materials to include current products and standards. Jeff Benedict said minor changes were made to reference the correct ASTM requirements and revisions to tables. No major field changes were made, but this will allow labs to complete their work according to MAG specifications.

31. Case 11-26: Revise Section 332 and 715: Slurry Seal Material and Application

Revise Section 332 and 715: Slurry Seal Material and Application to include current practice and technologies. Mr. Benedict provided a summary of revisions: Moved job mix formula to 715 from 332 (in whole) cleaned up language and updated 715 to allow the use of the polymer modified emulsion binders. This will be a major change to both sections, though only the addition of the PMQSH is an addition. Tables are clearer and updated.

32. Case 11-27: Update Section 335: Hot Asphalt Rubber Seal

Update Section 335: Hot Asphalt Rubber Seal (Chip) to include current practice and technologies including blending of rubber binder. Mr. Benedict provided a summary of revisions including: revisions to binders, elimination of extender oils, and insertion of some current practices of blending the rubber binder.

33. Case 11-28: Revise Section 716: Cover Material

Revise Section 716: Cover Material to include a better description of "pre-coat" and method. Update references as needed. Jeff Benedict said this case had minor revisions. A better description of "pre-coat" and method was added. MAG sections were updated or eliminated as the references needed.

34. Case 11-29: Revise Section 701. Rock, Gravel and Sand (renamed Aggregates)

Revise Section 701. Change title from Rock, Gravel and Sand to Aggregates. Move materials to appropriate sections, and clarify types of aggregates. Update all references to Section 701. Brian Gallimore, chair of the Materials Working Group also introduced several new cases based on recommendations of the group. The first was a major revision to Section 701. The materials group thought it best to moved material to their respective corresponding

sections. Other revisions included: clarify course aggregate, boulders and cobbles, and remove quarry stone. In addition, a list of MAG specifications that reference Section 701 were handed out showing what references would need to be updated to the new version.

35. Case 11-30: Update Section 702: Base Material.

    Update Section 702: Base Material. Revise for current standards. Brian Gallimore sponsored this case from the Materials Working Group. The main revisions were to move all ABC material to Section 310. It also removed AB order of preference. Other references to Section 702 would also need to be updated.

36. Case 11-31: Revise Section 703: Rip Rap.

    Revise Section 703: Rip Rap. Indicate proper aggregate size and testing methods. The case defined properties of the material and consolidated section references to rip rap.

37. Case 11-32: Modify Section 309: Lime Slurry Stabilization

    Modify Section 309: Lime Slurry Stabilization to include the use of hydrated lime, add mix criteria, testing procedures and payment. Brian Gallimore

38. Case 11-33: Revise Section 311: Soil Cement Base Course

    Revise Section 311: Soil Cement Base Course. Clarify and update the construction methods of cement treated subgrade. Brian Gallimore said the case allows for hydrated lime, and changes the specifications to be more up to date. It will allow methods currently in use by the county.

39. Case 11-34: Revise Section 312: Cement Treated Base

    Revise Section 312: Cement Treated Base to add provisions for measuring moisture content and update density testing procedures. Brian Gallimore discussed the moisture content and method of mechanical distribution.

40. Case 11-35: Revise Section 310: Untreated Base Course

    Revise Section 310: Untreated Base Course. Change title to clarify meaning, address conflicting construction and evaluation process. Brian Gallimore said the Materials Working Group had one more additional case that was undergoing final revisions, but that he wished to introduce it as a case now so that it could be reviewed this year. *Note: Later that week Mr. Gallimore provided the draft case which included revisions to classify compaction guidelines and update deficiency, corrective action and construction methods.*

41. Potential Cases

    Any additional cases could be added to a queue for work in 2012.

42. Working Group Reports
(Note: detailed written meeting notes were provided in the agenda and addendum packets.)

a. **Specifications and Details Outside the Right-of-Way Working Group**
Peter Kandaris said the next meeting is scheduled for Wednesday July 27, at 1:30 p.m. at the ARPA office. It would focus on summarizing the progress and beginning prioritization.

b. **Asphalt Working Group**
Jeff Benedict said they had completed most of the revisions (that were provided as new cases) except for RAP which they plan to work on next year.

c. **Materials Working Group**
Brian Gallimore said he would finish up revisions to Section 310, and then the group would be done for the year. Next year they would like to look at RAP for ABC and crushed concrete.

d. **Water/Sewer Issues Working Group**
Jim Badowich he would like to get more contractors to the meetings. In addition to the fire hydrant details the group discussed valve box frames and covers. Thicker covers and other types were discussed including plastic varieties Phoenix is considering. The next meeting of the water/sewer working group is scheduled for July 19 at 1:30 in the MAG Agave Room. (1st floor of the MAG building.)

e. **Concrete Working Group (5/18/11)**
Jeff Hearne said the new cases have superseded some of the sections the working group was reviewing, so the group can provide comments to current cases. The next concrete working group meeting is scheduled for July 20th at 1:30 p.m. at the ARPA office.

43. Staff Reports

Mr. Tyus brought up the question of the next meeting location. Due to remodeling of the MAG offices, members agreed to meet at ARPA again for the August 3, 2011 committee meeting.

44. Open General Discussion

Warren White said information on ADA requirements was due to be released July 26th. He said there was a seminar scheduled, and that Chandler would set up for it. Bob Herz said MCDOT was also setting up a conference room to participate on August 9th. Additional information would be provided.

45. Adjournment:

Chairman Tobiasson adjourned the meeting at 4:09 p.m.

2011 PROPOSED REVISIONS TO MAG SPECIFICATIONS AND DETAILS

(Updated information can be found on the website: http://www.azmag.gov/Projects/Project.asp?CMSID=1055&CMSID2=1136

CASE	DESCRIPTION	PROPOSED BY	MEMBER	SUBMITTAL DATE Last Revision	VOTE DATE	VOTE	
10-05	Case 10-05: Revise FOREWORD to clarify use of the *MAG Specifications and Details for Public Works Construction* document.	Peoria/ SRP	Javier Setovich Peter Kandaris	03/03/2010 07/13/2011	Scheduled for: 08/03/2011	0 0 0	Yes No Abstain
10-08	Case 10-08: Re-write Section 717 ASPHALT-RUBBER.	MCDOT	Bob Herz	05/05/2010 02/18/2011	Withdrawn 07/13/2011	0 0 0	Yes No Abstain
10-12	Case 10-12: New Section 361 – Shallow Depth Fiber Optic Micro-Conduit Installation.	Scottsdale	Rod Ramos	05/05/2010 02/02/2011	Withdrawn 05/04/2011	0 0 0	Yes No Abstain
11-01	Case 11-01: Miscellaneous Corrections. A. Correct typographical errors in Table 711-1. B. Correct typographical error in Table 705-1. C. Correct errors in Detail 212.	MCDOT/ SRP	Bob Herz Peter Kandaris	01/05/2011 04/06/2011		0 0 0	Yes No Abstain
11-02	Case 11-02: Add an Asphalt Pavement Safety Edge option to Detail 201.	MCDOT	Bob Herz	01/05/2011 04/06/2011		0 0 0	Yes No Abstain
11-03	Case 11-03: Replace cadmium plated bolts referenced in Section 610.13 with zinc plated bolts as described in ASTM-B633.	Peoria	Javier Setovich	02/02/2011 07/13/2011		0 0 0	Yes No Abstain
11-04	Case 11-04: Replace reference to MAG Detail 190 in MAG Section 301 with ASTM D4718. Delete MAG Detail 190.	OROW WG/ SRP	Peter Kandaris	03/02/2011 05/23/2011	Scheduled for: 08/03/2011	0 0 0	Yes No Abstain
11-05	Case 11-05: Move MAG Section 225 Water Requirements into MAG Section 104.1.3.	OROW WG/ SRP	Peter Kandaris	03/02/2011 05/04/2011	Approved 07/13/2011	10 0 0	Yes No Abstain
11-06	Case 11-06: Remove sections and details of the MAG specifications that are no longer used or refer to outdated technologies.	OROW WG/ Buckeye	Scott Zipprich	03/02/2011 06/01/2011		0 0 0	Yes No Abstain
11-07	Case 11-07: Revisions to Section 327 - Hot In-Place Recycling.	AGC/ Asphalt WG	Jeff Benedict	05/04/2011 05/13/2011	Scheduled for: 08/03/2011	0 0 0	Yes No Abstain

2011 PROPOSED REVISIONS TO MAG SPECIFICATIONS AND DETAILS

(Updated information can be found on the website: http://www.azmag.gov/Projects/Project.asp?CMSID=1055&CMSID2=1136

CASE	DESCRIPTION	PROPOSED BY	MEMBER	SUBMITTAL DATE Last Revision	VOTE DATE	VOTE	
11-08	Case 11-08: Revise Section 711 Paving Asphalt to update performance tables and reference AASHTO standards.	AGC/ Asphalt WG	Jeff Benedict	05/04/2011 07/13/2011	Scheduled for: 08/03/2011	0 0 0	Yes No Abstain
11-09	Case 11-09: Preservative Seal for Asphalt Concrete – Revise sections 334 and 718.	AGC/ Asphalt WG	Jeff Benedict	05/04/2011 07/13/2011	Scheduled for: 08/03/2011	0 0 0	Yes No Abstain
11-10	Case 11-10: Curb Ramp Modification for Radial Installations – Create new Detail 234. Revise details 235-1, 235-2 and 235-3.	MCDOT	Bob Herz	05/04/2011		0 0 0	Yes No Abstain
11-11	Case 11-11: Superseded ASTM Specifications: A. Nuclear Density Testing of Soil B. Section 772 Chain Link Fence	OROW WG/ SRP	Peter Kandaris	05/04/2011 07/13/2011		0 0 0	Yes No Abstain
11-12	Case 11-12: Modifications to Regulatory Requirements, MAG 107.	OROW WG/ SRP	Peter Kandaris	05/04/2011	Carry forward to 2012	0 0 0	Yes No Abstain
11-13	Case 11-13: Replace Manhole Frame and Cover Details 423, 424 and 523 with new updated versions: 423-1, 423-2, 424-1, 424-2, 523-2 and 523-3.	Water/Sewer WG/ Buckeye	Scott Zipprich	06/01/2011	Scheduled for: 08/03/2011	0 0 0	Yes No Abstain
11-14	Case 11-14: Update Fire Hydrant Detail 360-1, and add Wet Barrel Option (360-2) and Details (360-3).	Water/Sewer WG/ Buckeye	Scott Zipprich	07/13/2011		0 0 0	Yes No Abstain
11-15	Case 11-15: Modify Residential Speed Hump: Detail 210.	Chandler	Warren White	07/13/2011		0 0 0	Yes No Abstain
11-16	Case 11-16: Modify Section 415: Steel Flexible Metal Guardrail.	OROW WG/ SRP	Peter Kandaris	07/13/2011		0 0 0	Yes No Abstain
11-17	Case 11-17: Revise Section 520: Steel and Aluminum Handrails.	OROW WG/ SRP	Peter Kandaris	07/13/2011		0 0 0	Yes No Abstain

2011 PROPOSED REVISIONS TO MAG SPECIFICATIONS AND DETAILS

(Updated information can be found on the website: http://www.azmag.gov/Projects/Project.asp?CMSID=1055&CMSID2=1136

CASE	DESCRIPTION	PROPOSED BY	MEMBER	SUBMITTAL DATE Last Revision	VOTE DATE	VOTE	
11-18	Case 11-18: Update Section 350: Removal of Existing Improvements.	OROW WG/ SRP	Peter Kandaris	07/13/2011		0 0 0	Yes No Abstain
11-19	Case 11-19: Modify Section 340: Detectable Warnings.	OROW WG/ SRP	Peter Kandaris w/ N. Vescio	07/13/2011		0 0 0	Yes No Abstain
11-20	Case 11-20: Update MAG specifications for brass and bronze water line construction materials to meet federal low lead standards.	Chandler	Warren White	07/13/2011		0 0 0	Yes No Abstain
11-21	Case 11-21: Add new Section 623: Special Bedding for Mainline Storm Drain Pipe.	Phoenix	Syd Anderson	07/13/2011		0 0 0	Yes No Abstain
11-22	Case 11-22: Revise Sections 325 and 717: Asphalt Rubber Specifications.	AGC/ Asphalt WG	Jeff Benedict	07/13/2011		0 0 0	Yes No Abstain
11-23	Case 11-23: Revise Section 321: Asphalt Concrete Pavement	AGC/ Asphalt WG	Jeff Benedict	07/13/2011		0 0 0	Yes No Abstain
11-24	Case 11-24: Add new Section 337: Crack Sealing and Crack Filling	AGC/ Asphalt WG	Jeff Benedict	07/13/2011		0 0 0	Yes No Abstain
11-25	Case 11-25: Update Section 713: Emulsified Asphalt Materials to include current products and standards.	AGC/ Asphalt WG	Jeff Benedict	07/13/2011		0 0 0	Yes No Abstain
11-26	Case 11-26: Revise Section 332 and 715: Slurry Seal Material and Application to include current practice and technologies.	AGC/ Asphalt WG	Jeff Benedict	07/13/2011		0 0 0	Yes No Abstain
11-27	Case 11-27: Update Section 335: Hot Asphalt Rubber Seal (Chip) to include current practice and technologies including blending of rubber binder.	AGC/ Asphalt WG	Jeff Benedict	07/13/2011		0 0 0	Yes No Abstain

2011 PROPOSED REVISIONS TO MAG SPECIFICATIONS AND DETAILS

(Updated information can be found on the website: http://www.azmag.gov/Projects/Project.asp?CMSID=1055&CMSID2=1136

CASE	DESCRIPTION	PROPOSED BY	MEMBER	SUBMITTAL DATE Last Revision	VOTE DATE	VOTE	
11-28	Case 11-28: Revise Section 716: Cover Material to include a better description of "pre-coat" and method. Update references as needed.	AGC/ Asphalt WG	Jeff Benedict	07/13/2011		0 0 0	Yes No Abstain
11-29	Case 11-29: Revise Section 701. Change title from Rock, Gravel and Sand to Aggregates. Move materials to appropriate sections, and clarify types of aggregates. Update all references to Section 701.	AGC/ Materials WG	Brian Gallimore	07/13/2011		0 0 0	Yes No Abstain
11-30	Case 11-30: Update Section 702: Base Material. Moved all ABC material to Section 310. Removed AB order of preference. Revise for current standards. Update all references to Section 702.	AGC/ Materials WG	Brian Gallimore	07/13/2011		0 0 0	Yes No Abstain
11-31	Case 11-31: Revise Section 703: Rip Rap. Indicate proper aggregate size and testing methods.	AGC/ Materials WG	Brian Gallimore	07/13/2011		0 0 0	Yes No Abstain
11-32	Case 11-32: Modify Section 309: Lime Slurry Stabilization to include the use of hydrated lime, add mix criteria, testing procedures and payment.	AGC/ Materials WG	Brian Gallimore	07/13/2011		0 0 0	Yes No Abstain
11-33	Case 11-33: Revise Section 311: Soil Cement Base Course. Clarify and update the construction methods of cement treated subgrade.	AGC/ Materials WG	Brian Gallimore	07/13/2011		0 0 0	Yes No Abstain
11-34	Case 11-34: Revise Section 312: Cement Treated Base to add provisions for measuring moisture content and update density testing procedures.	AGC/ Materials WG	Brian Gallimore	07/13/2011		0 0 0	Yes No Abstain
11-35	Case 11-35: Revise Section 310: Untreated Base Course. Change title to clarify meaning, address conflicting construction and evaluation process.	AGC/ Materials WG	Brian Gallimore	07/13/2011		0 0 0	Yes No Abstain

FOREWORD

Publication of these Uniform Standard Specifications and Details for Public Works Construction fulfills the goal of a group of agencies who joined forces in 1966 to produce such a set of documents. Subsequently, in the interest of promoting county-wide acceptance and use of these standards and details, the Maricopa Association of Governments accepted their sponsorship and the responsibility of keeping them current and viable.

These specifications and details, representing the best professional thinking of representatives of several Public Works Departments, reviewed and refined by members of the construction industry, were written to fulfill the need for uniform rules governing public works construction performed for Maricopa County and the various cities and public agencies within Maricopa County ~~in the county. It further fulfills the need for adequate standards by the smaller communities and agencies~~ who could not afford to promulgate such standards for themselves. Agencies in other regions or climes within the state of Arizona wishing to apply these specifications may need to make adjustments for local conditions.

~~A uniform set of specifications and details, updated and embracing the most modern materials and construction techniques will redound to the benefit of the public and the private contracting industry. Uniform specifications and details will eliminate conflicts and confusion, lower construction costs, and encourage more competitive bidding by private contractors.~~

These uniform specifications and details are intended to aid in the construction industry in providing modern materials and construction techniques, eliminate conflicts and confusion, lower construction costs and encourage more competitive bidding by contractors for the benefit of public works construction in the right-of-way. Use of these standards for projects outside of the right-of-way should be reviewed by professional engineers and architects and applied with care to insure relevance to the planned work.

Specifications and details contained herein should be incorporated into project plans and specifications after careful review by the design engineer or architect of specific project needs. Not all specifications will apply to all projects as these standards are developed to meet a variety of public works needs. Prepared plans and specifications should clearly call out specific uniform specifications and details required for the project.

Uniform specifications and details are not a substitute for good engineering judgment. Unique conditions will arise that are outside the scope of these standards. When this happens, professional engineers and architects are required to use their judgment to amend these standards to best meet site-specific project needs in accordance with the rules set forth by the State of Arizona and policy statements made by the Arizona State Board of Technical Registration.

The Uniform Standard Specifications and Details for Public Works Construction will be revised periodically and reprinted to reflect advanced thinking and the changing technology of the construction industry. To this end a Specifications and Details Committee has been established as a permanent organization to continually study and recommend changes to the Specifications and Details. Interested parties may address suggested changes and questions to:

Standard Specifications & Details Committee
c/o Maricopa Association of Governments
302 North First Avenue, Suite 300
Phoenix, Arizona, 85003.

These suggestions will be reviewed by the committee and appropriate segments of the industry and cumulative annual revisions will be published the first of each year. A copy of this publication is available for review on the internet at the website listed below. Please follow the links to the publications page and look for *Uniform Standard Specifications for Public Works Construction and/or Uniform Standard Details for Public Works Construction Within Public Rights of Way*:

www.mag.maricopa.gov

While in the interest of regional uniformity, it is hoped that all using agencies will adopt these standards with as few changes as possible, it is recognized that because of charter requirements and for other reasons, some agencies will find it necessary to modify or supplement certain requirements. In the interest of reducing a proliferation of agency specific modifications, it is strongly recommended that the agency representatives to MAG bring their modifications for consideration by the committee for inclusion into these standards.

MARICOPA COUNTY
Department of Transportation

MEMORANDUM

Date: Jan 5, 2011

To: MAG Specifications and Details Committee

From: Robert Herz, MCDOT Representative

Subject: Proposed addition to Standard Detail 201 – Pavement Section at Termination **Case 11-02**

PURPOSE: Add an Asphalt Pavement Safety Edge option to Detail 201

REVISION: Add Asphalt Pavement Safety Edge Detail.

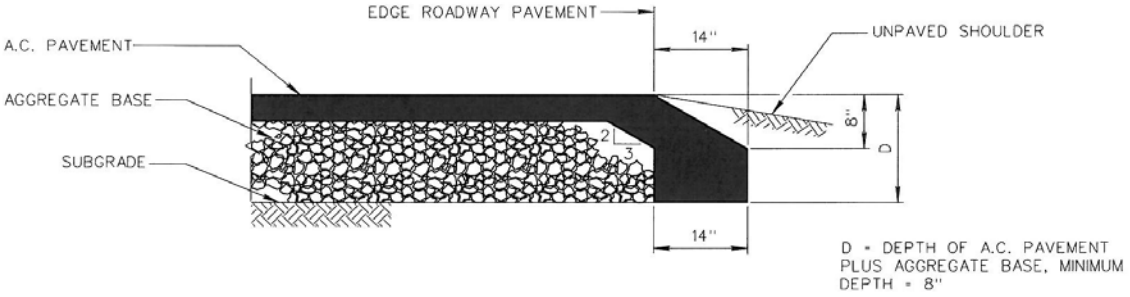

2901 West Durango Street Phoenix, Arizona 85009 Phone: 602-506-4760 Fax: 602-506-5969

Add the following to Section 321:

321.8.8 Safety Edge: Prior to commencing paving operations that require construction of a safety edge, the Contractor shall submit for the Engineer's approval construction procedures to be used for placement and compaction of the safety edge.

The finished safety edge slope shall be planar and form a 30° ± 5° angle with the horizontal plane. Due to the required final edge slope of the safety edge, compaction as required by sections 321.8.4 and 321.10 may not be attainable. When the approved procedures for placement and compaction of the safety edge are followed, the safety edge compaction shall be considered acceptable.

When the depth of the safety edge extends two inches or more below the bottom of the asphalt pavement base course, the portion below the base course shall be placed and compacted as a separate construction operation. The remaining portions of the safety edge shall be constructed as part of each successive asphalt lift (base, intermediate, and finishing courses). Construction of the base course may immediately follow compaction of the lower portion of the safety edge.

When the depth of the safety edge extends less than two inches below the bottom of the asphalt pavement base course, the portion below the base course may be placed and compacted with the base course in a single operation. The remaining portions of the safety edge shall be constructed as part of each successive asphalt lift (intermediate and finishing courses).

P.O. Box 52025
Phoenix, AZ 85072-2025
(602) 236-5900

Case 11-04

DATE: May 23, 2011

TO: MAG Specifications and Details Committee Members

FROM: Peter Kandaris, SRP Representative
Outside of Right-of-Way Working Group

RE: **Rock Correction Procedure – Revised for Comments**

Purpose: MAG Detail 190, "Rock Correction Procedure for Maximum Density Determination," is not a construction detail, but a design guide for use by quality control technicians. The procedure does not belong in a construction specification. MAG 190 is referenced only in MAG Section 301 and can be replaced by the standard Arizona rock correction method, ARIZ 227c.

Revisions:

- Replace reference to MAG Detail 190 in MAG Section 301 with ARIZ 227c.
- Replace reference to ASTM D2922 & 3017 in MAG Section 301 with ASTM D6938 (superseded in 2007).
- Delete MAG 190.
- Include the following in Section 101, "Abbreviations and Definitions"

101.1 ABBREVIATIONS:

ARIZ Arizona Department of Transportation test method

101.2 DEFINITIONS AND TERMS:

Arizona Test Method: Arizona Department of Transportation Materials Testing Manual test method.

SECTION 301

SUBGRADE PREPARATION

301.1 DESCRIPTION:

This section shall govern the preparation of natural, or excavated areas prior to the placement of sub-base material, pavement, curbs and gutters, driveways, sidewalks or other structures. It shall include stripping and disposal of all unsuitable material including existing pavement and obstructions such as stumps, roots, rocks, etc., from the area to be paved.

301.2 PREPARATION OF SUBGRADE:

With the exception of areas where compacted fills have been constructed as specified in Section 211, in the areas where new construction is required, the moisture content shall be brought to that required for compaction by the addition of water, by the addition and blending of dry, suitable material or by the drying of existing material. The material shall then be compacted to the specified relative density. If pumping subgrade should become evident at any time prior to paving, the Engineer may require proof rolling with a pneumatic-tire roller or other approved equipment in order to identify the limits of the unacceptable area. The proof rolling will be performed at no additional cost to the Contracting Agency.

Subgrade preparation shall also include preparing the subgrade to the required line and grade for paved or unpaved shoulders, tapers, turnouts, and driveways, and at all other project locations where aggregate base and/or select material courses are used in accordance with the Project Plans.

301.2.1 The Contractor may use removed existing asphalt concrete and other existing bituminous roadway surfacing materials originating on the project site, as embankment fill. All materials used shall be thoroughly crushed to sizes not exceeding four inches, or as approved by the Engineer. These asphalt/bituminous materials shall be placed not less than two feet below finished subgrade elevation.

Project earthwork quantities when included as separate contract pay items will include removed asphalt/bituminous material volumes, unless otherwise specified in the Special Provisions.

All unsuitable material and all excess material shall be disposed of in accordance with the requirements of Sections 205.2 and 205.6, respectively. When additional material is required for fill, it shall conform to Section 210.

301.3 RELATIVE COMPACTION:

The subgrade shall be scarified and loosened to a depth of 6 inches. Rock 6-inches or greater in size that becomes exposed due to scarification shall be removed from the scarified subgrade. When fill material is required, a layer of approximately 3 inches may be spread and compacted with the subgrade material to provide a better bond. The subgrade cut and fill areas shall be constructed to achieve a uniform soil structure having the following minimum compaction, measured as a percentage of maximum dry density when tested in accordance with AASHTO T-99, Method A, and T-191 or ~~ASTM D-2922 and D-3017~~ ASTM D-6938 with the percent of density adjusted in accordance with the rock correction procedures for maximum density determination, ~~Standard Detail 190~~ARIZ 227c [(1)], to compensate for the rock content larger than that which will pass a No. 4 sieve. Unless otherwise noted in the project plans or project

[(1)] Arizona Department of Transportation test method

specifications, compaction shall be performed within 2 percentage points of the optimum moisture content.

(A) Below pavement, curb & gutter, attached sidewalk, roadway shoulders, and other areas within right-of-way subject to vehicular traffic	95 percent
(B) Below detached sidewalk not subject to vehicular traffic	85 percent

301.4 SUBGRADE TOLERANCES:

Subgrade upon which pavement, sidewalk, curb and gutter, driveways, or other structures are to be directly placed shall not vary more than 1/4 inch from the specified grade and cross-section. Subgrade upon which sub-base or base material is to be placed shall not vary more than 3/4 inch from the specified grade and cross-section. Variations within the above specified tolerances shall be compensating so that the average grade and cross-section specified are met.

301.5 GRADING OF AREAS NOT TO BE PAVED:

Areas where grade only is called for on the plan shall be graded to meet the tolerances for the subgrade where subbase or base material is to be placed. The surface shall be constructed to a straight grade from the finished pavement elevations shown on the plans to the elevation of the existing ground at the extremities of the area to be graded.

301.6 PROTECTION OF EXISTING FACILITIES:

The Contractor shall exercise extreme caution to prevent debris from falling into manholes or other structures. In the event that debris should fall into a structure it shall immediately be removed.

301.7 MEASUREMENT:

Measurement for Subgrade Preparation will be by the square yard. The area to be measured will be the total accepted area of new asphalt or Portland cement pavement, including paved shoulders, tapers, and turnouts, and unpaved roadway shoulders. Measurement will also include driveways that are paved or are surfaced with aggregate base or select materials. The area under concrete curb and gutter, sidewalk, concrete driveway entrances, and concrete alley entrances will not be included in this pay item.

Project earthwork quantities for Roadway Excavation, Borrow Excavation, and Fill Construction shall not be separately measured when they are not listed as separate line items on the fee proposal form. In such case, unless otherwise specified, payment for said earthwork items shall be included in the unit price for Subgrade Preparation.

301.8 PAYMENT:

Payment for Subgrade Preparation will be made only when it is performed for street or roadway paving projects.

Payment shall be compensation in full for stripping, scarifying, grading, excavating, hauling, filling, compacting, and disposing of excess or unsuitable materials, together with all costs incidental thereto.

DRAFT

Date: July 15, 2011

To: MAG Specification and Detail Committee members

From: Jeff Benedict

RE: case 11-07 section 327 “Hot in Place Recycling”

Purpose: To update this section with clear limits of its use and scope.
The depth of use is now clear and understandable. Typos have been corrected.

This reflects minor changes to the current MAG section.

SECTION 327

HOT IN-PLACE RECYCLING

327.1 DESCRIPTION

This work shall consist of rehabilitating the surface layer of existing asphalt concrete pavement. Rehabilitation shall be accomplished with specially designed equipment in a simultaneous multistep process of heating, scarifying, applying an asphalt recycling agent and thoroughly remixing and reshaping the old asphalt concrete surface to an average depth of 1", and then placing an overlay of new hot mix asphalt concrete in compliance with the lines, grades, thickness and typical cross sections shown on the plans (typically 1 " to 2 "). NOTE: This work shall be performed with a single machine that heats, scarifies, recycles and spreads new asphalt concrete hot mix, all in one continuous pass. Additional preheaters may be utilized to achieve specified depth and temperature.

327.2 MATERIALS:

Asphalt Recycling Agent used to restore the existing pavement shall be approved by the Engineer prior to use. A manufacturer's certification shall be submitted for each load of recycling agent delivered to the project.

Hot Mix Asphalt Concrete (HMAC) shall meet the requirements of section 710 or section 717.

327.3 EQUIPMENT

The Contractor shall specify, in the bid proposal, the type of equipment intended for use. The equipment shall be on the project in operating condition a minimum of 2 days before beginning operations to allow evaluation by the Engineer. The Engineer reserves the right to reject equipment deemed not suitable for the intended purpose, at no additional cost to the Agency.

The recycling equipment shall meet the following minimum requirements:

Repaver: The equipment for this work shall be a self-contained, self-propelled, automated unit capable of heating, scarifying (or milling), mixing, redistributing and leveling the existing asphalt concrete pavement to the specified depth, all in a single pass.

It shall have a means of automatically applying an asphalt recycling agent at a uniform rate as shown on the plans, special provisions, or as requested by the Engineer. It shall be capable of applying a new HMAC layer over the hot, partially compacted recycled mixture.

Heating Unit: This unit shall be hooded to prevent damage to adjacent property, including trees and shrubs. It shall be capable of heating the pavement surface to a temperature high enough (375° - 400° F.) to allow scarification to the required depth without breaking aggregate particles or charring the pavement surface.

Scarifying or Milling Units: The scarifiers or rotary millers shall be able to penetrate the pavement surface to a depth shown, up to a maximum of one inch in one pass. Scarifiers or millers shall be equipped with separate, automatic height adjustments which allow clearance over manholes and other obstructions.

Recycling Agent Applicator: This system shall automatically add recycling agent to the scarified material at a uniform rate as shown on the plans, special provisions or as requested by the Engineer. The application rate shall be synchronized with the machine's forward speed to maintain a tolerance, within 5% of the specified rate.

Conveying System: Shall consist of a receiving hopper and conveying system to collect and transport new hot mix asphalt concrete material to the finishing unit.

Recycling Unit: A system that mixes, distributes and levels the scarified material over the width processed to produce a uniform cross-section of recycled material.

Finishing Unit: This unit shall have automatic screed controls to produce a surface conforming to that shown on the plans. The unit shall be capable of producing a uniform slope, grade and texture.

327.4 CONSTRUCTION METHODS:

The pavement to be treated shall be cleaned of trash, debris, earth or other deleterious substances present in sufficient quantity to interfere with the work to be performed.

The heating shall be sufficient to soften the pavement to the extent that it can be scarified or milled to the depth specified. Due to the varying properties of the existing asphalt pavement, depth of the scarification material may be varied, if requested by the Engineer. Heating shall be done in a manner that will assure uniform softening and will not char the asphalt.

The Contractor shall be responsible for protecting the area adjacent to the work from heat damage. If damage occurs, the Contractor shall replace all damaged areas, landscape, curb, parked vehicles, etc. at no cost to the Agency.

To provide a welded longitudinal joint, the standing edge of the adjoining asphalt pavement shall be fully heated to a width at least 2 inches beyond the width to be scarified and recycled.

Immediately following heating, the pavement surface shall be scarified (or milled) to the specified depth. The scarified material shall have a temperature between 225° F. and 265° F. unless otherwise requested by the Engineer. The material shall be leveled, mixed and treated with a recycling agent. The application rate shall be as shown on the plans, special provisions or as requested by the Engineer. Application rate for the recycling agent may be adjusted as necessary to maintain a uniform mixture.

The reclaimed material shall be gathered by a leveling device and spread to a uniform depth over the width being processed. After it is placed and while it still has a residual temperature of at least 190° F., a layer of new HMAC conforming to the job mix formula shall be placed over it. The application rate of new material shall be sufficient to provide the required pavement thickness.

Construction, compaction and smoothness of the surface shall be in accordance with Section 321 except as modified in this section

327.5 WEATHER CONDITIONS:

This work shall not be done when it is raining or if there is a threat of rain. The ambient temperature shall be at least 50° F. and rising and the application shall cease when the temperature reaches 55° F. and falling.

327.6 AIR QUALITY:

The equipment and process shall meet all Arizona Department of Environmental Quality (ADEQ) and County air quality regulations and the Contractor shall have the appropriate ADEQ air quality control permit prior to the issuance of the notice to proceed.

327.7 MEASUREMENT:

Pavement Recycling will be measured by the square yard completed and accepted. Recycling Agent will measure by the gallon of actual material used in place. Hot Mix Asphalt Concrete (HMAC) will be measured by the ton in place.

327.8 PAYMENT:

The accepted quantities of pavement recycling will be paid at the contract unit price per square yard. Payment shall include cleaning the existing pavement surface and heating, scarifying, redistributing, leveling and compacting HMAC pavement. Asphalt Recycling Agent will be paid for by the gallon used in place. Hot Mix Asphalt concrete (HMAC) will be paid for by the ton in place.

Date: July 15, 2011

To: MAG Specification and Detail Committee members

From: Jeff Benedict

RE: case 11-08 section 711 “Paving Asphalt

Purpose: To bring section into compliance with ASTM and AASHTO current specifications into this section.

Revisions: Two binders were added to the table, one heavier (PG76-16) and one softer, (PG 58-22) minor revisions to test procedures due to typos not caught in the original or current specification. The PAV test temperatures are clear and not open to interpretation.
Minor revisions. The title is changed to conform to current practices.

SECTION 711

PAVING ASPHALT

711.1 GENERAL:

The asphalt shall be produced from crude asphalt petroleum or a mixture of refined liquid asphalt and refined solid asphalt. It shall be free from ad-mixture with any residues obtained by the artificial distillation of coal, coal tar, or paraffin oil and shall be homogeneous and free from water.

Asphalt shall not be heated during the process of its manufacture, storage, or during construction so as to cause injury as evidence by the formation of carbonized particles.

711.2 TESTING REQUIREMENTS:

Paving asphalt shall be classified by the Performance Grading System and shall conform to the requirements set forth in Table 711-1 and AASHTO M320 with the PAV temperature changes noted herein this table.

TABLE 711-1				
PERFORMANCE GRADING SYSTEM				
	PG 58-22	**PG 64-16**	**PG 70-10**	**PG-76-16**
Original Asphalt				
Viscosity, ASTM D4402 (Note 1) Max. 3 Pa·s, Test Temp, °C	135	135	135	135
Dynamic Shear (Note 2) G*/Sinδ, Min., 1.0 kPa Test Temp. @ 10 rad/s, °C	58	64	70	76
Rolling Thin Film Oven Residue (AASHTO T240)				
Mass Loss, Maximum % Dynamic Shear G*/sinδ, Min., 2.20 kPa Test Temp. @ 10 rad/s, °C	1.0 58	1.0 64	1.0 70	1.0 76
Pressure Aging Vessel Residue (AASHTO R28)				
PAV Aging Temperature, °C	100	100	110	110
Dynamic Shear G*sinδ, Max., 5000 kPa Test Temp. @ 10 rad/s, °C	22	28	34	34
Creep Stiffness, AASHTO T313 S, Maximum, 300 MPa *m*-value, Minimum, 0.300 Test Temp. @60s, °C	-12	-6	0	-6
Direct Tension, (Note 3) Failure Strain, Minimum 1.0% Test Temp. @ 1.0 mm/min. °C	-12	-6	0	-6

On all Grades Flash Point Temperature T48: Minimum 230 °C and Mass Loss, Maximum 1.00 percent.

NOTES:

(1) This requirement may be waved at the discretion of the specifying agency if the supplier warrants that the asphalt binder can be adequately pumped and mixed at temperatures that meet all applicable safety standards.

(2) For quality control of unmodified asphalt cement production, measurement of the viscosity of the original asphalt cement may be substituted for dynamic shear measurements of G*/sinδ at test temperatures when the asphalt is a Newtonian fluid. Any suitable standard means of viscosity measurement may be used, including vacuum capillary or rotational viscometer (T202 or T316).

(3) If the Creep Stiffness is below 300 MPa, the direct tension test is not required. If the Creep Stiffness is between 300 and 600 MPa, the direct tension failure strain requirement can be used in lieu of the Creep Stiffness requirement. The m-value requirement must be satisfied in all cases.

Design Note: Performance Grade Asphalts are selected for certain reliabilities with respect to high and low pavement temperatures. The specified characteristics are based upon a loading frequency that approximates vehicle speeds of approximately 90 km/hr. Since all binders are frequency dependent, the designer may consider increasing the high temperature requirement for slow transient and standing loads, such as intersection loading. The high temperature requirement may also be increased for excessive numbers of equivalent single axle loads.

711.3 TEST REPORT AND CERTIFICATION:

At the time of delivery of each shipment of asphalt, the supplier supplying the material shall deliver to the purchaser 3 certified copies of the test report which shall indicate the name of the refinery and supplier, type and grade of asphalt delivered, date and point of delivery, quantity delivered, delivery ticket number, purchase order number, and results of the above specified tests. The test report shall be signed by an authorized representative of the supplier certifying that the product delivered conforms to the specifications for the type and grade indicated.

Until the certified test reports and samples of the material have been checked by the Engineer, that material will be only tentatively accepted by the Contracting Agency. Final acceptance will be dependent upon the determination of the Engineer that the material involved fulfills the requirements prescribed. The certified test reports and the testing required in connection with the reports shall be at no additional cost to the Contracting Agency.

711.4 TEMPERATURES:

Unless otherwise specified in these specifications or in the special provisions, the various grades of paving asphalt shall not exceed 340**°F.** ~~be applied within the temperature range indicated in Table 711-2.~~ The exact temperature shall be determined by the Engineer.

At no time, after loading into a tank car or truck for transportation from the refinery to the purchaser, shall the temperature of the paving asphalt be raised above 400 degrees F.

~~**TABLE 711-2**~~				
~~**APPLICATION TEMPERATURE OF PAVING ASPHALTS**~~				
~~**Grade of Material**~~	~~**Pug Mill Mixing Asphalt Temperature °F.**~~		~~**Distributor Application Temperature °F.**~~	
	~~**Min.**~~	~~**Max.**~~	~~**Min.**~~	~~**Max.**~~
~~PG 58-22~~	~~275~~	~~325~~	~~300~~	~~390~~
~~PG 64-16~~	~~275~~	~~325~~	~~300~~	~~390~~
~~PG 70-10~~	~~275~~	~~325~~	~~300~~	~~390~~
~~PG 76-16~~	~~290~~	~~340~~	~~310~~	~~390~~

Paving asphalt shall be heated in such a manner that steam or hot oils will not be introduced directly into the paving asphalt during heating.

711.5 DISTRIBUTING EQUIPMENT:

Distributing Equipment shall meet the requirements of Section 330.

711.6 CONVERSION OF QUANTITIES:

When pay quantities of paving asphalt are determined from volumetric measurements, the volumetric measurement at any temperature shall be reduced to the volume the material would occupy at 60 degrees F. in accordance with ASTM D-1250. In converting volume to weight, the computations shall be based on Table 711-3.

TABLE 711-3		
PAVING ASPHALT QUANTITY CONVERSION		
Grade of Material	**Gals. Per Ton of 60 °F.**	**Lbs. Per Gal at 60 °F.**
PG 58-22	235	8.5
PG 64-16	235	8.5
PG 70-10	235	8.5
PG 76-16	233	8.6

Date: July 15, 2011

To: MAG Specification and Detail Committee members

From: Jeff Benedict

RE: case 11-09 section 334, 718 “Preservative seal”

Purpose: To bring section into current available products and practices used in the MAG area of use. Current products have been added and now conform to MAG standard

Revisions: added “plastic seal”, “TRMSS” and conventional emulsified asphalts. We removed “petroleum hydrocarbon resins, and Petroleum resin emulsions. These products are difficult to apply to pavements successfully. Bleeding and surface texture loss are typical results of these product applications. Revisions to the 718 table reflect the new products and current test methods.
This would be considered a major change.

SECTION 334

PRESERVATIVE SEAL FOR ASPHALT CONCRETE

334.1 DESCRIPTION:

The asphalt concrete preservative seal shall be composed of an emulsified asphalt or ~~penetrating softening agent and~~ asphalt sealant to ~~rejuvenate and~~ preserve the asphalt concrete pavement.

Preservative seals are applicable for ~~new and existing~~ asphalt pavements as directed on the plans, special provisions, or the Engineer.

334.2 MATERIALS:

The preservative seal shall be as specified by the engineer.
They shall be one of the following materials:
Acrylic polymer emulsion (section 718, type A)
CSS-1, or SS-1h (section 713)
A "filled" asphalt sealer such as Sealmaster's TRMSS or equal (section 718 type C)

334.3 CONSTRUCTION METHOD:

The material shall be approved by the Engineer in accordance to this specification. The application rates, dilution and curing shall be directed by the Engineer in accordance with this specification.

The application rate will be based upon a typical surface condition test site with application rate trials to determine the needed rate. All application rates specified in Section 712 shall be a diluted 50-50 ~~preservative seal~~ emulsified asphalt and water, except as recommended by the manufacturer for Type C ~~D~~. Any over applied seal will be sanded as directed by the Engineer. Application equipment shall be in accordance with Section 330.

Before opening a treated area to traffic, the surface shall be checked for slipperiness and/or tackiness. If the treated portion of the roadway must be opened to traffic prior to the disappearance of slipperiness and/or tackiness, the surface shall be sanded with a minimum of 1 ½ pounds per square yard or as directed by the Engineer. Sand Blotter shall comply with Section 333.

334.4 MEASUREMENT:

Preservative seal for asphalt concrete will be measured by the gallon or ton applied ~~including dilutent~~.

334.5 PAYMENT:

Payment will be made on the basis of the unit price bid in the proposal. Payment shall be full compensation for preservative seal complete and in place.

SECTION 718
PRESERVATIVE SEAL FOR ASPHALT CONCRETE PAVEMENT

718.1 GENERAL

Asphalt Concrete preservative seal shall be one of the following types or equal, with typical application rates.
TYPE A- Acrylic polymer, modified emulsion. Diluted to the manufacture's recommendation and applied at a rate of .10 to .20 gallons per square yard.

TYPE B- Emulsified asphalt, type SS-1h orCSS-1h. Diluted to 1:1 with hot water, and applied at a rate of .10 to .15 gallons per square yard. Material shall meet all requirements in section 713 as well as those specified in table 718-1.

Type C- Sealmaster's TRMSS or equal not diluted, and applied at a rate of .10 to .20 gallons per square yard.

718.2 TEST METHODS AND REQUIREMENTS

Preservative seal for asphalt concrete material, shall meet type A, B, or C on table 718-1by certification from the manufacturer.

All tests shall be performed by AMRL accredited laboratory, accredited in the specified test being performed.

Table 718-1

Properties *(note 2)		Type-A	Type-B	Type -C
Saybolt Viscosity @77F (sfs)	AASHTO T12	15-40	20-100	45-55(KU)*(note 1)
Residue by evaporation 138C		53min.	57 min.	30-40
Sieve test %		.10 max.	.10 max.	N/A
Test on residue from evaporation AASHTO t59				
Flash point F		450F	450F	450F
Softening point		130 F min.		130F min
Accelerated weathering test		Report (note 3)		Report *(note 3)
Ductility(@77F)100g 5 sec.		20 min.	40 min.	N/A
Storage stability, test 1 day%		N/A	97.5 min	N/A

Notes:
1, Kreb units (ASTM D562)
2. A full set of tests shall be performed by as specified by the special provisions in the undiluted condition. These tests and any other specified will be performed at the contractor's expense.
3.The Ultraviolet resistance testing results will be provided at no cost to the engineer.

MARICOPA COUNTY
Department of Transportation

MEMORANDUM

Date: May 4, 2011

To: MAG Specifications and Details Committee

From: Robert Herz, MCDOT Representative

Subject: Curb Ramp Modification for Radial Installations **Case 11-10**

PURPOSE: Eliminate concrete spalling that may occur in the narrow circular segment between the back of curb and the detectable warnings for curb ramps installed within a curb return.

REVISION: Modify the back of curb to include the circular segment area between the back of curb and the detectable warnings. This proposed revision involves the creation of the attached new Detail 234 showing the curb modification and also revising Type A, B, and C Curb Ramps shown in Details 235-1, 235-2 and 235-3.

2901 West Durango Street Phoenix, Arizona 85009 Phone: 602-506-4760 Fax: 602-506-5969

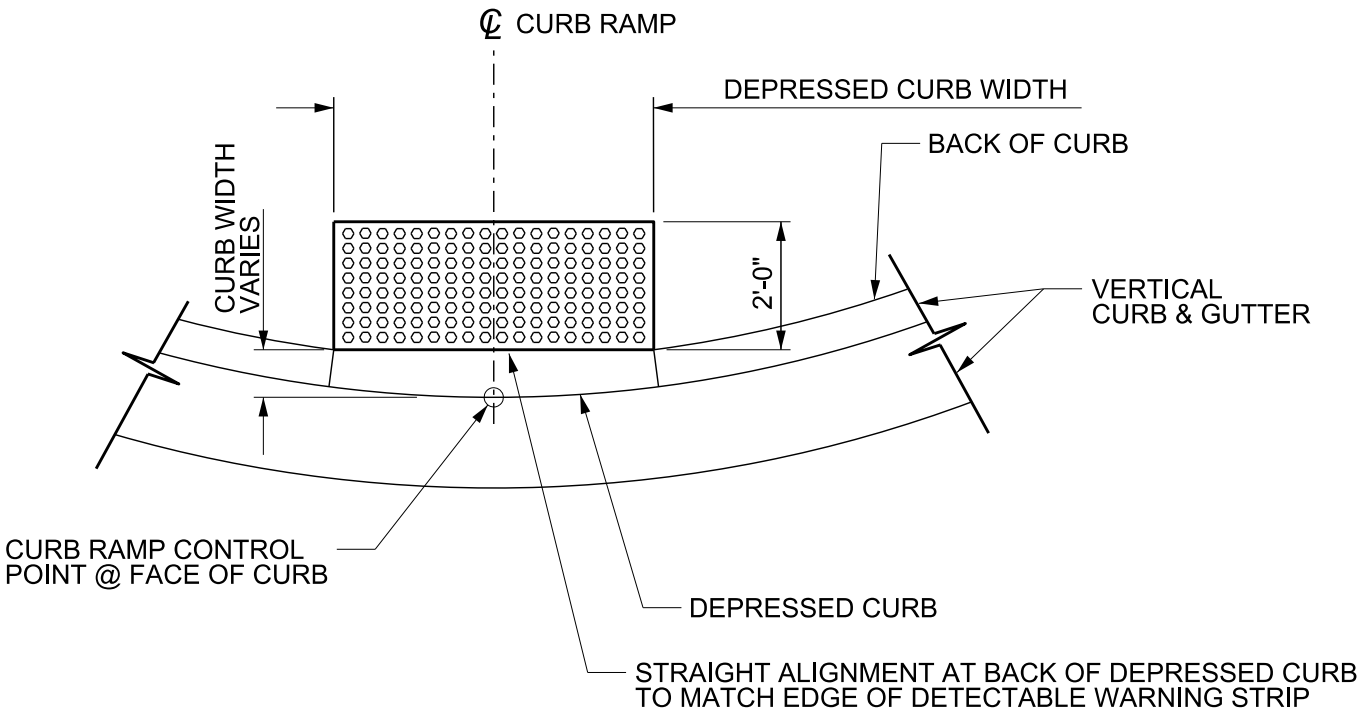

PLAN VIEW

DETAIL NO.				REVISED	DETAIL NO.
234	MARICOPA ASSOCIATION of GOVERNMENTS	STANDARD DETAIL ENGLISH	CURB MODIFICATION @ DETECTABLE WARNING		234

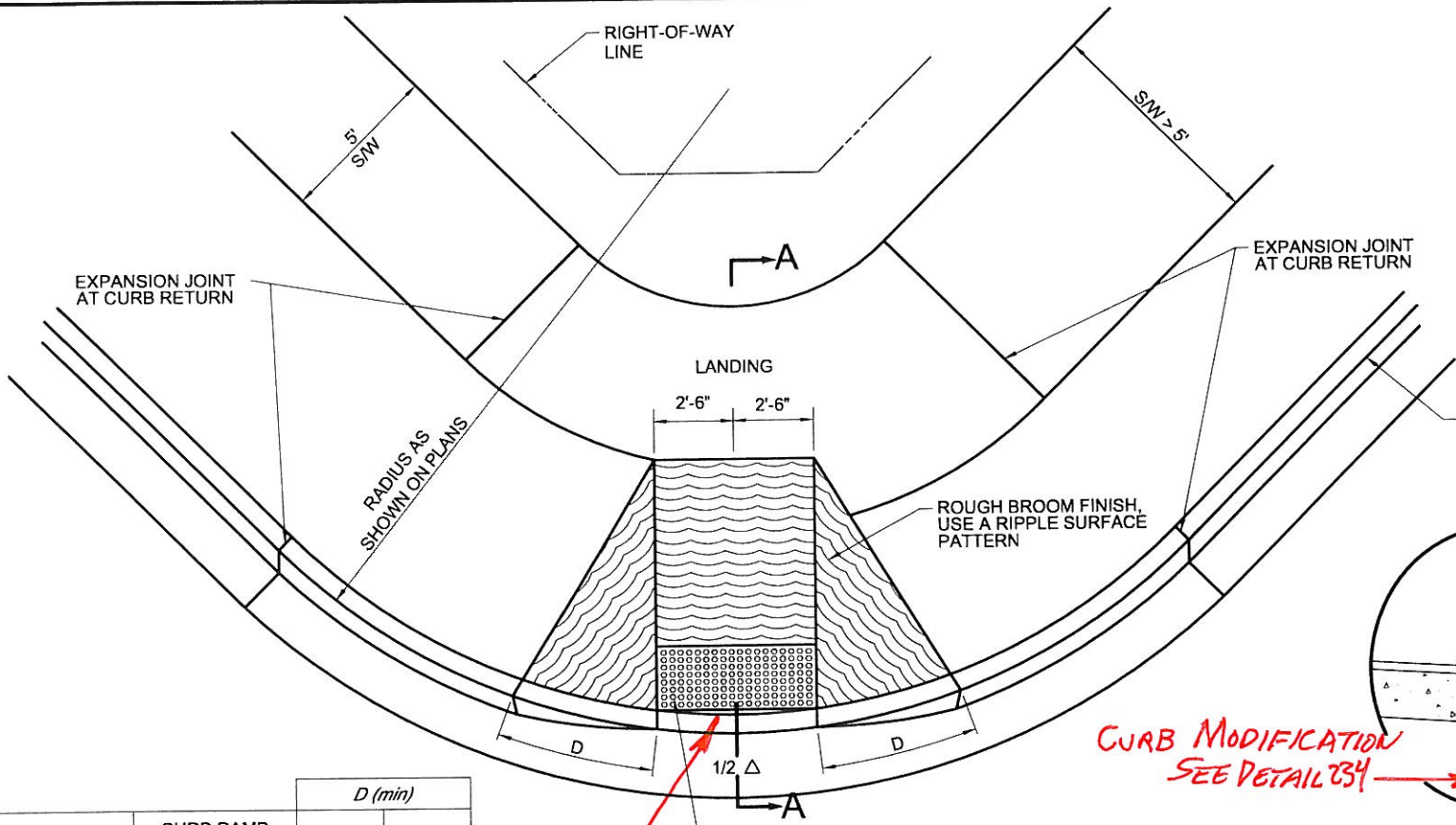

CURB HEIGHT	CURB RAMP MINIMUM LENGTH	D (min) $S_G \leq 1\%$	D (min) $S_G \leq 2\%$
4"	5'	4.0'	4.5'
6"	7½'	6.0'	6.5'
7"	9'	6.5'	7.5'

S_G =MAXIMUM GUTTER SLOPE WITHIN RAMP LIMITS

DRAFTING NOTE
REMOVE ARC

NOTES:

1. CLASS 'B' CONCRETE PER SECTION 725.
2. EXPANSION JOINTS SHALL CONFORM TO SECTION 340.
3. SIDEWALK SURFACE TO MATCH 1½% SLOPE FROM TOP OF CURB
4. DETECTABLE WARNING IS TO COMPLY WITH THE JURISDICTIONAL AGENCY'S REQUIREMENTS.
5. DETAIL IS ADA COMPLIANT FOR $S_G \leq 2\%$.

TYPE 'A' (DETACHED SIDEWALK)

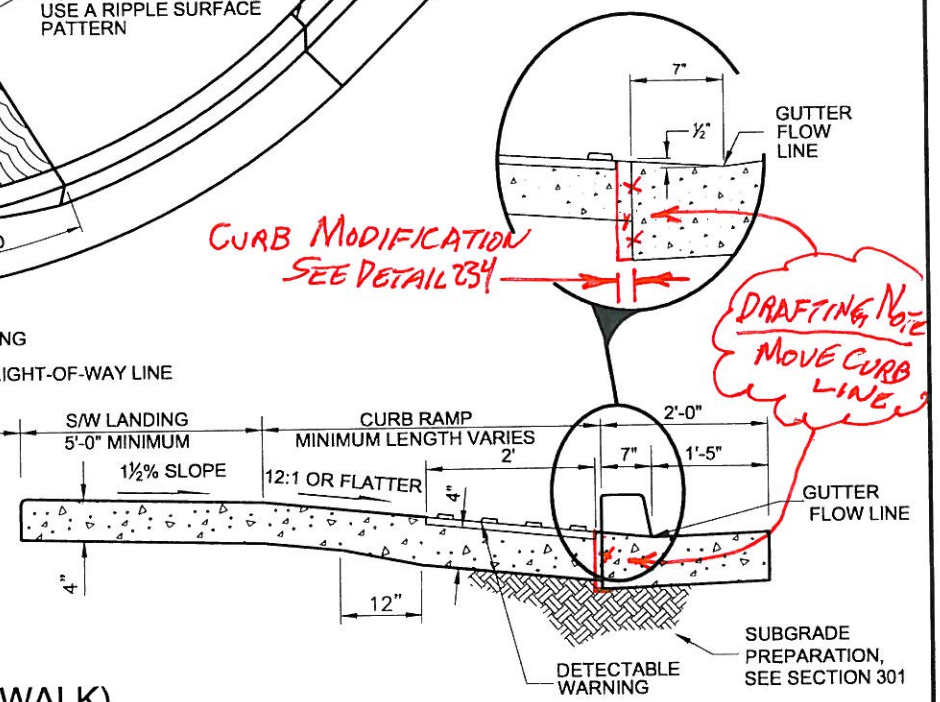

SECTION A-A

DETAIL NO.		STANDARD DETAIL		REVISED	DETAIL NO.
235-1	MARICOPA ASSOCIATION of GOVERNMENTS	ENGLISH	CURB RAMPS	01–01–2011	235-1

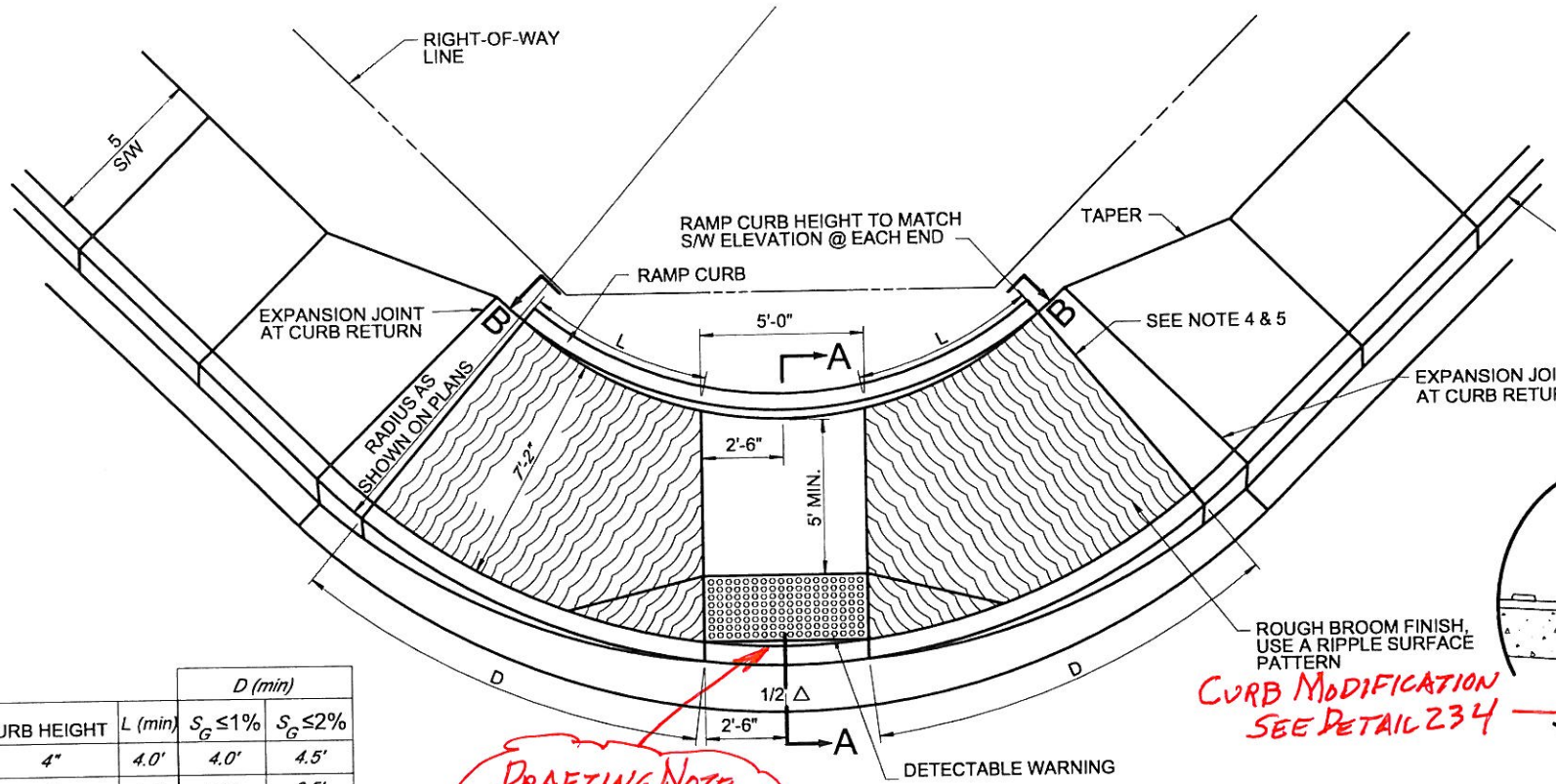

CURB MODIFICATION SEE DETAIL 234

DRAFTING NOTE REMOVE ARC

CURB HEIGHT	L (min)	D (min) $S_G \leq 1\%$	D (min) $S_G \leq 2\%$
4"	4.0'	4.0'	4.5'
6"	6.0'	6.0'	6.5'
7"	7.0'	6.5'	7.5'

S_G=MAXIMUM GUTTER SLOPE WITHIN RAMP LIMITS

NOTES:

1. CLASS 'B' CONCRETE PER SECTION 725.
2. EXPANSION JOINTS SHALL CONFORM TO SECTION 340.
3. DETECTABLE WARNING IS TO COMPLY WITH THE JURISDICTIONAL AGENCY'S REQUIREMENTS.
4. INCREASE 'L' OR 'D' AS NEEDED TO HAVE THE TOP OF RAMP FORM A RADIAL LINE.
5. WHEN TOP OF RAMP IS LESS THAN 4' FROM CURB RETURN, EXTEND RAMP TO THE CURB RETURN.
6. DETAIL IS ADA COMPLIANT FOR $S_G \leq 2\%$.

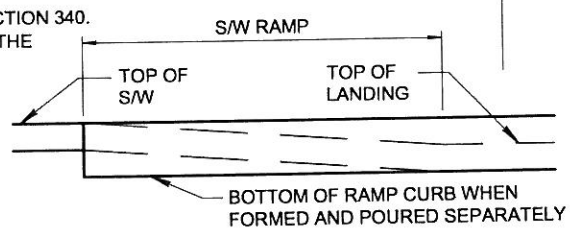

SECTION B-B

TYPE 'B'

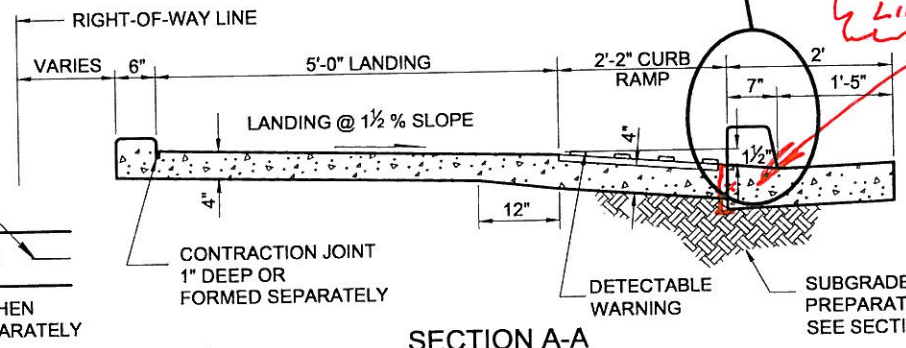

SECTION A-A

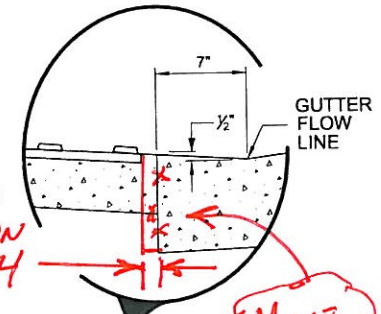

MOVE CURB LINE

DETAIL NO.			REVISED	DETAIL NO.
235-2	MARICOPA ASSOCIATION of GOVERNMENTS — STANDARD DETAIL ENGLISH	CURB RAMPS	01-01-2011	235-2

NOTES:

1. CLASS 'B' CONCRETE CONSTRUCTION PER SECTION 725.
2. DETECTABLE WARNING IS TO COMPLY WITH THE JURISDICTIONAL AGENCY'S REQUIREMENT.
3. RAMP LONGITUDINAL SLOPE SHALL BE 12:1 OR FLATTER.
4. RAMP CROSS SLOPE SHALL BE 1½%.
5. DETAIL IS ADA COMPLIANT FOR CURB RADII ≥ 20' AND GUTTER SLOPE ≤ 2.0%.

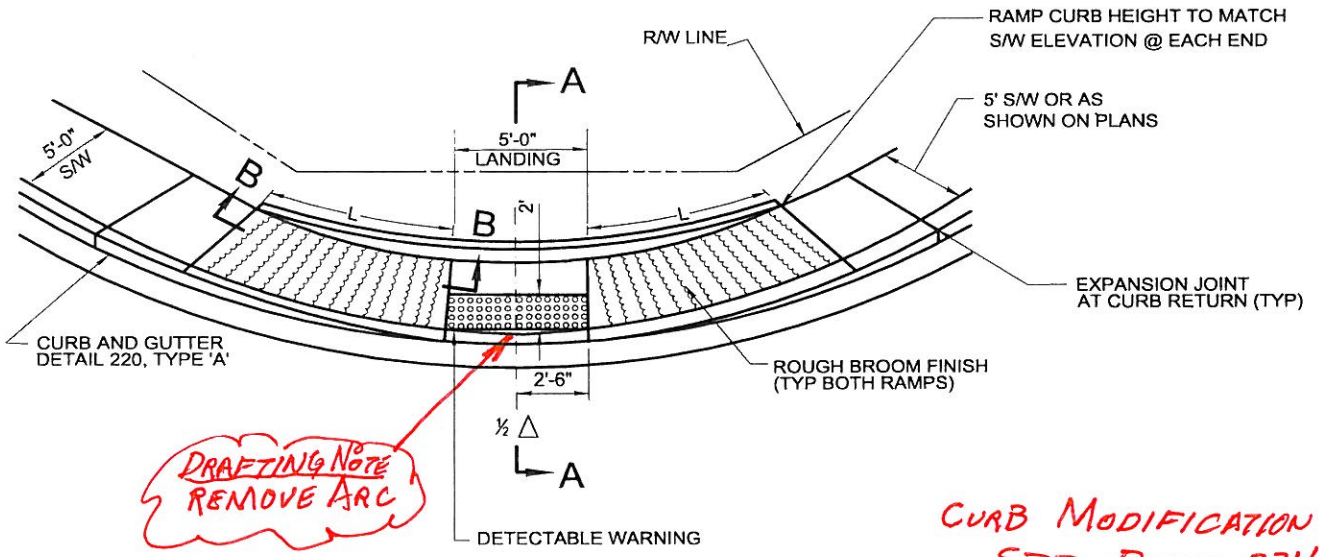

	L (min)	
CURB HEIGHT	$S_G \leq 1\%$	$S_G \leq 2\%$
4"	5.0'	6.0'
6"	7.0'	8.5'

S_G =MAXIMUM GUTTER SLOPE WITHIN RAMP LIMITS

DETAIL

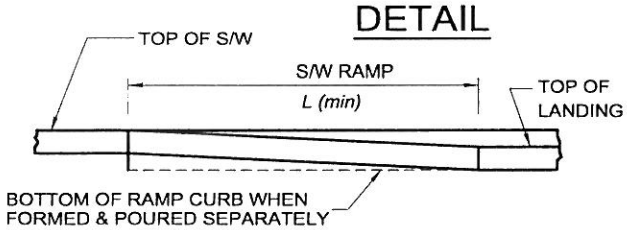

SECTION B-B

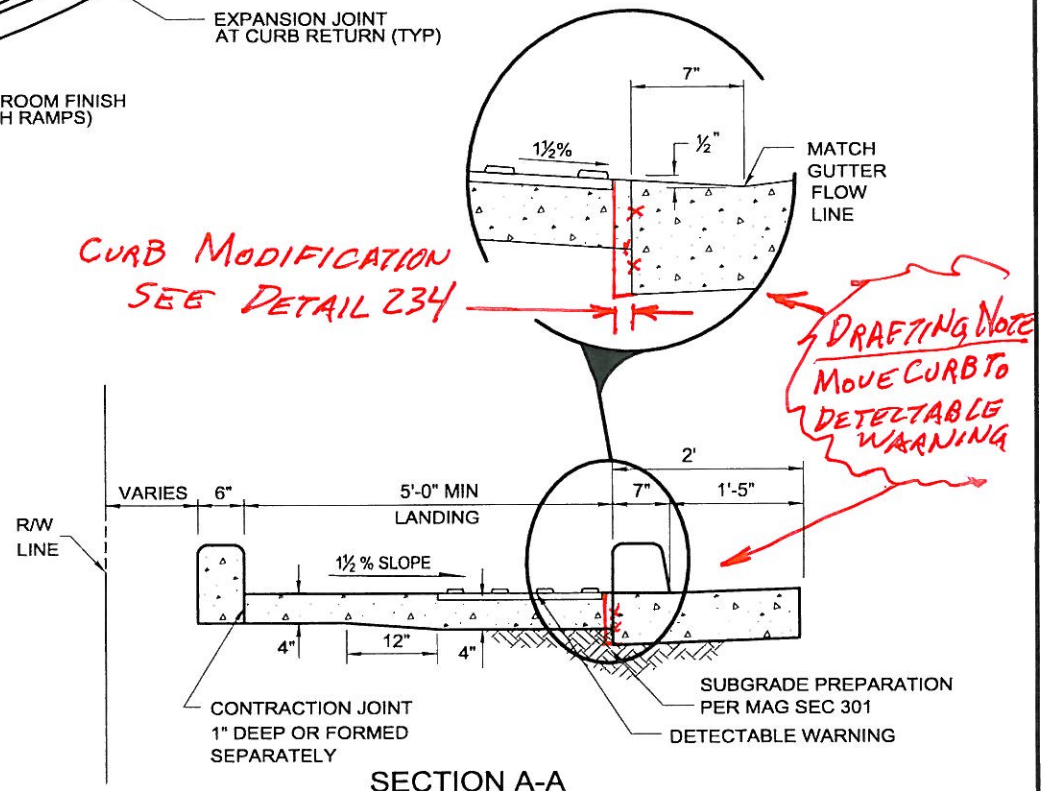

SECTION A-A

TYPE 'C'

DETAIL NO.			REVISED	DETAIL NO.
235-3	MARICOPA ASSOCIATION of GOVERNMENTS — STANDARD DETAIL ENGLISH	CURB RAMPS	01-01-2011	235-3

P.O. Box 52025
Phoenix, AZ 85072-2025
(602) 236-5900

Case 11-11(a)

DATE: May 4, 2011

TO: MAG Specifications and Details Committee Members

FROM: Peter Kandaris, SRP Representative

RE: **Superseded ASTM Specification: Nuclear Density Testing of Soil**

Purpose: ASTM standard D3017, "Standard Test Method for Water Content of Soil and Rock in Place by Nuclear Methods (Shallow Depth)," and standard D2922, "Standard Test Methods for Density of Soil and Soil-Aggregate in Place by Nuclear Methods (Shallow Depth)" were withdrawn in 2007 and replaced with ASTM D6938, "Standard Test Method for In-Place Density and Water Content of Soil and Soil-Aggregate by Nuclear Methods (Shallow Depth)."

Revisions: Replace references to ASTM D3017 & D2922 with ASTM D6938 in the following MAG specification pages and paragraphs:

Page	Paragraph
211-2	211.4
301-1	301.3
311-2	311.4.4
312-1	312.3
313-2	313.8
601-2	601.2.5
601-5	601.4.4
620-1	620.3.1

ASTM D3017-05

Withdrawn Standard: ASTM D3017-05 Standard Test Method for Water Content of Soil and Rock in Place by Nuclear Methods (Shallow Depth) (Witthdrawn 2007)

Developed by Subcommittee: D18.08

WITHDRAWN, REPLACED BY D6938

Buy Standard (PDF) more info 5 pages $ 46.80

Withdrawn Rationale:

This test method covers the determination of water content of soil and rock by the thermalization or slowing of fast neutrons where the neutron source and the thermal neutron detector both remain at the surface.

Formerly under the jurisdiction of ASTM Committee D18 on Soil and Rock, his test method was discontinued in May 2007.

1. Scope

1.1 This test method covers the determination of water content of soil and rock by the thermalization or slowing of fast neutrons where the neutron source and the thermal neutron detector both remain at the surface.

1.2 The water content in mass per unit volume of the material under test is determined by comparing the detection rate of thermalized or slow neutrons with previously established calibration data.

1.3 The values stated in SI units are to be regarded as the standard. The inch-pound equivalents may be approximate.

1.3.1 It is common practice in the engineering profession to concurrently use pounds to represent both a unit of mass (lbm) and of force (lbf). This implicitly combines two systems of units, that is, the absolute system and the gravitational system. This test method has been written using the absolute system for water content (kilograms per cubic metre) in SI units. Conversion to the gravitational system of unit weight in lbf/ft^3 may be made by multiplying by 0.06243 or in kN/m^3 by multiplying by 9.807. The recording of water content in pound-force per cubic foot should not be regarded as non-conformance with this test method although the use is scientifically incorrect.

This standard does not purport to address all of the safety concerns, if any, associated with its use. It is the responsibility of the user of this standard to establish appropriate safety and health practices and determine the applicability of regulatory limitations prior to use.

Withdrawn Standard: ASTM D2922-05 Standard Test Methods for Density of Soil and Soil-Aggregate in Place by Nuclear Methods (Shallow Depth) (Withdrawn 2007)

Developed by Subcommittee: D18.08

WITHDRAWN, REPLACED BY D6938

Buy Standard (PDF) more info 6 pages $ 46.80

Withdrawn Rationale:

These test methods cover the determination of the total or wet density of soil and soil-rock mixtures by the attenuation of gamma radiation where the source and detector(s) remain on the surface (Backscatter Method) or the source or detector is placed at a known depth up to 300 mm (12 in.) while the detector(s) or source remains on the surface (Direct Transmission Method).

Formerly under the jurisdiction of ASTM Committee D18 on Soil and Rock, these test methods were discontinued in May 2007.

1. Scope

1.1 These test methods cover the determination of the total or wet density of soil and soil-rock mixtures by the attenuation of gamma radiation where the source and detector(s) remain on the surface (Backscatter Method) or the source or detector is placed at a known depth up to 300 mm (12 in.) while the detector(s) or source remains on the surface (Direct Transmission Method).

1.2 The density in mass per unit volume of the material under test is determined by comparing the detected rate of gamma radiation with previously established calibration data.

1.3 The values tested in SI units are to be regarded as the standard. The inch-pound equivalents may be approximate.

1.4 It is common practice in the engineering profession to concurrently use pounds to represent both a unit of mass (lbm) and a unit of force (lbf). This implicitly combines two separate systems of units; that is, the absolute system and the gravitational system. It is scientifically undesirable to combine the use of two separate sets of inch-pound units within a single standard. These test methods have been written using the gravitational system of units when dealing with the inch-pound system. In this system the pound (lbf) represents a unit of force (weight). However, the use of balances or scales recording pounds of mass (lbm), or the recording of density in lbm/ft^3 should not be regarded as nonconformance with these test methods.

P.O. Box 52025
Phoenix, AZ 85072-2025
(602) 236-5900

Case 11-11(b)

DATE: July 11, 2011

TO: MAG Specifications and Details Committee Members

FROM: Peter Kandaris, SRP Representative
Outside of Right-of-Way Working Group

RE: **Superseded ASTM Specification: Section 772 Chain Link Fence**

Purpose: Review ASTM standards referenced in MAG Section 772. Find outdated standards and recommend replacement standards.

Revisions: Below is a table of the ASTM standards referenced in Section 772. Replace withdrawn standard ASTM A569 with ASTM A1011. All other standards are current.

MAG Section 772 – Chain Link Fence
Referenced ASTM Standards:

ASTM F-1083	Standard Specification for Pipe, Steel, Hot-Dipped Zinc-Coated (Galvanized) Welded, for Fence Structures
ASTM A-569	**Withdrawn – replaced with ASTM A1011-10** Standard Specification for Steel, Sheet and Strip, Hot-Rolled, Carbon, Structural, High-Strength Low-Alloy, High-Strength Low-Alloy with Improved Formability, and Ultra-High Strength
ASTM A-500	Standard Specification for Cold-Formed Welded and Seamless Carbon Steel Structural Tubing in Rounds and Shapes
ASTM F-1043	Standard Specification for Strength and Protective Coatings on Steel Industrial Fence Framework
ASTM A-653	Standard Specification for Steel Sheet, Zinc-Coated (Galvanized) or Zinc-Iron Alloy-Coated (Galvannealed) by the Hot-Dip Process
ASTM A-924	Standard Specification for General Requirements for Steel Sheet, Metallic-Coated by the Hot-Dip Process
ASTM A-789	Standard Specification for Seamless and Welded Ferritic/Austenitic Stainless Steel Tubing for General Service
ASTM A-392	Standard Specification for Zinc-Coated Steel Chain-Link Fence Fabric
ASTM A-491	Standard Specification for Aluminum-Coated Steel Chain-Link Fence Fabric
ASTM A-824	Standard Specification for Metallic-Coated Steel Marcelled Tension Wire for Use With Chain Link Fence
ASTM F-626	Standard Specification for Fence Fittings
ASTM A-121	Standard Specification for Metallic-Coated Carbon Steel Barbed Wire

TOWN OF BUCKEYE

Date:	June 1, 2011
To:	MAG Specifications and Details Committee
From:	Scott Zipprich, Town of Buckeye Representative
Subject:	Detail 423, 424, 523-1, 523-2
Case:	11-13

PURPOSE: To replace the current manhole frame and cover details with updated details of products that are currently being manufactured. This also includes referencing the proper Class and AASHO references.

REVISION: The revisions will consist of replacement details 423-1, 423-2, 424-1, 424-2, 523-1 and 523-2.

530 East Monroe Avenue • Buckeye, Arizona 85326
Phone 623-349-6200 • Fax 623-349-6222 • www.buckeyeaz.gov

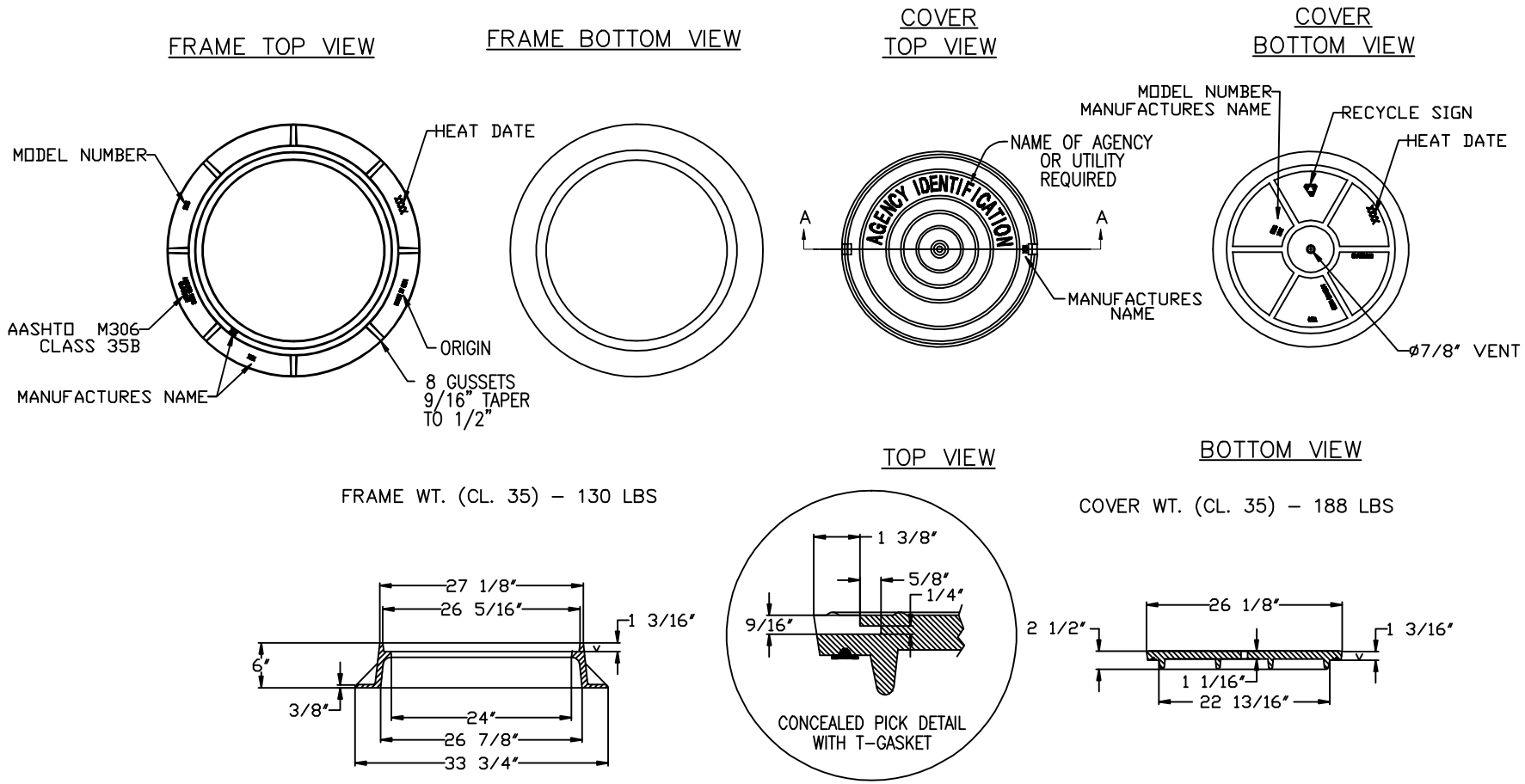

24" MANHOLE FRAME AND COVER

NOTE:

LETTERING ON MANHOLE COVER TO CONTAIN NAME OF AGENCY AND UTILITY FOR WHICH MANHOLE IS NEEDED, (I.E. "PHOENIX SANITARY SEWER"), OR AS DIRECTED. THE TOTAL WIDTH OF INDIVIDUAL LETTERS TO BE SUCH THAT LETTERS AND WORDS ARE EQUALLY SPACED AND BALANCED TO FORM A COMPLETE CIRCLE WITH SPACERS BEFORE AND AFTER THE WORD IDENTIFYING THE AGENCY INVOLVED. LETTERS TO BE 2" IN HEIGHT AND RAISED FLUSH W/ TOP OF COVER. TYPE OF LETTERS TO BE SUBMITTED FOR APPROVAL. WEIGHT OF CASTINGS SHALL BE NO MORE THAN 2% LESS THAN THE APPROXIMATE WEIGHT SPECIFIED. CASTINGS SHALL CONFORM TO ASTM A-48, CLASS 35 AND AASHTO M306. THE BEARING SURFACES OF THE FRAMES AND COVERS SHALL BE MACHINED AND THE COVERS SHALL SEAT FIRMLY WITHOUT ROCKING.

DETAIL NO.				REVISED	DETAIL NO.
423-1	MARICOPA ASSOCIATION of GOVERNMENTS	STANDARD DETAIL ENGLISH	WATER TIGHT 24" CAST IRON MANHOLE FRAME AND COVER	05-26-2011	423-1

FRAME TOP VIEW

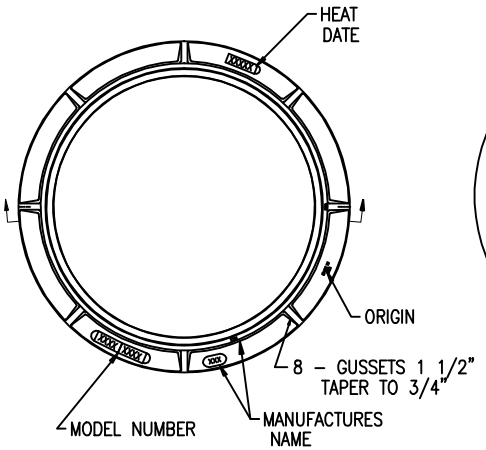

FRAME BOTTOM VIEW

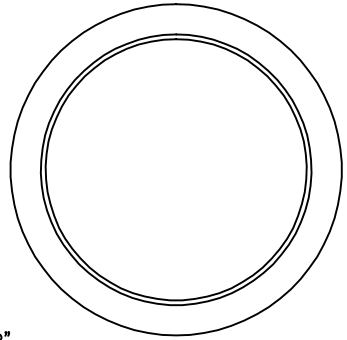

COVER TOP VIEW

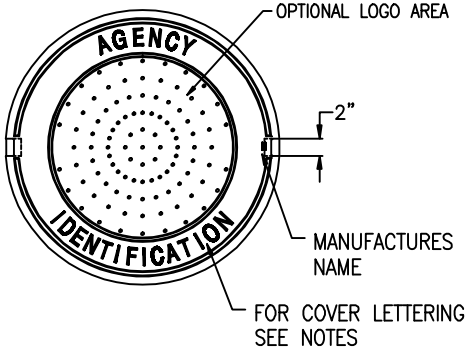

COVER BOTTOM VIEW

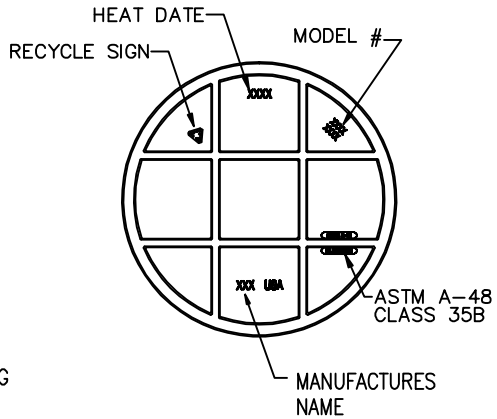

COVER WT. (CL. 35) – 210 LBS

FRAME WT. (CL. 35) – 227 LBS

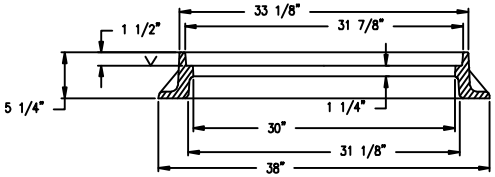

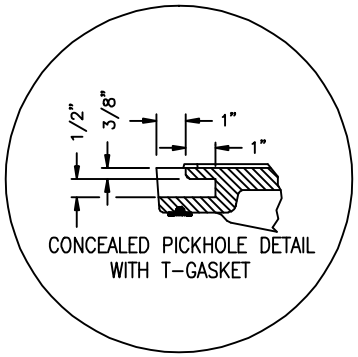

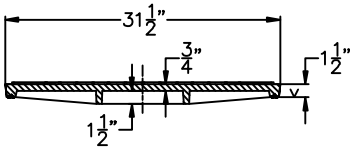

30" MANHOLE FRAME AND COVER

NOTE:

LETTERING ON MANHOLE COVER TO CONTAIN NAME OF AGENCY AND UTILITY FOR WHICH MANHOLE IS NEEDED, (I.E. "PHOENIX SANITARY SEWER"), OR AS DIRECTED. THE TOTAL WIDTH OF INDIVIDUAL LETTERS TO BE SUCH THAT LETTERS AND WORDS ARE EQUALLY SPACED AND BALANCED TO FORM A COMPLETE CIRCLE WITH SPACERS BEFORE AND AFTER THE WORD IDENTIFYING THE AGENCY INVOLVED. LETTERS TO BE 2" IN HEIGHT AND RAISED FLUSH W/ TOP OF COVER. TYPE OF LETTERS TO BE SUBMITTED FOR APPROVAL. WEIGHT OF CASTINGS SHALL BE NO MORE THAN 2% LESS THAN THE APPROXIMATE WEIGHT SPECIFIED. CASTINGS SHALL CONFORM TO ASTM A-48, CLASS 35 AND AASHTO M306. THE BEARING SURFACES OF THE FRAMES AND COVERS SHALL BE MACHINED AND THE COVERS SHALL SEAT FIRMLY WITHOUT ROCKING.

DETAIL NO.				REVISED	DETAIL NO.
423-2	MARICOPA ASSOCIATION of GOVERNMENTS	STANDARD DETAIL ENGLISH	WATER TIGHT 30" CAST IRON MANHOLE FRAME AND COVER	05-26-2011	423-2

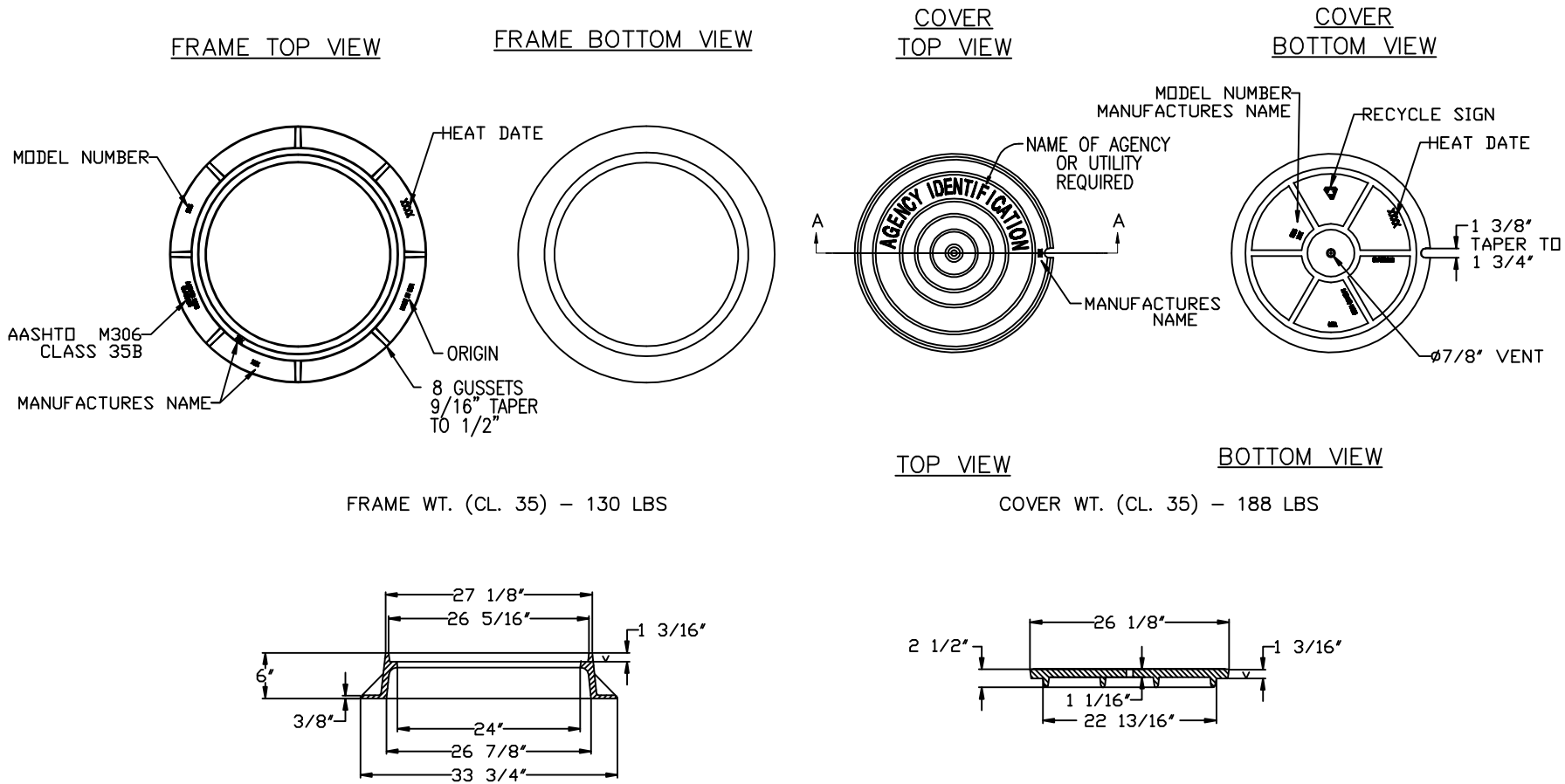

24" MANHOLE FRAME AND COVER

NOTE:

LETTERING ON MANHOLE COVER TO CONTAIN NAME OF AGENCY AND UTILITY FOR WHICH MANHOLE IS NEEDED, (I.E. "PHOENIX SANITARY SEWER"), OR AS DIRECTED. THE TOTAL WIDTH OF INDIVIDUAL LETTERS TO BE SUCH THAT LETTERS AND WORDS ARE EQUALLY SPACED AND BALANCED TO FORM A COMPLETE CIRCLE WITH SPACERS BEFORE AND AFTER THE WORD IDENTIFYING THE AGENCY INVOLVED. LETTERS TO BE 2" IN HEIGHT AND RAISED FLUSH W/ TOP OF COVER. TYPE OF LETTERS TO BE SUBMITTED FOR APPROVAL. WEIGHT OF CASTINGS SHALL BE NO MORE THAN 2% LESS THAN THE APPROXIMATE WEIGHT SPECIFIED. CASTINGS SHALL CONFORM TO ASTM A-48, CLASS 35 AND AASHTO M306. THE BEARING SURFACES OF THE FRAMES AND COVERS SHALL BE MACHINED AND THE COVERS SHALL SEAT FIRMLY WITHOUT ROCKING.

DETAIL NO.				REVISED	DETAIL NO.
424-1	MARICOPA ASSOCIATION of GOVERNMENTS	STANDARD DETAIL ENGLISH	24" CAST IRON MANHOLE FRAME AND COVER	05-26-2011	424-1

FRAME TOP VIEW

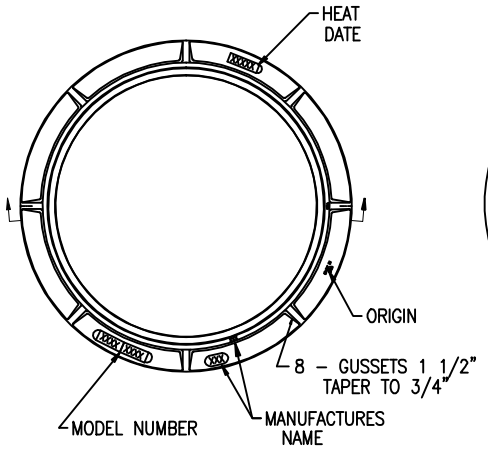

FRAME BOTTOM VIEW

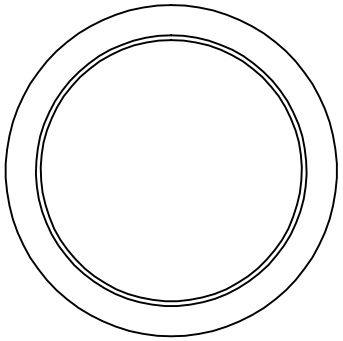

COVER TOP VIEW

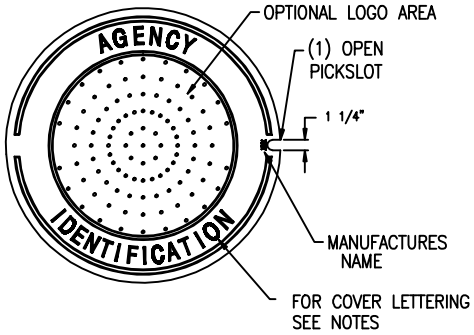

COVER BOTTOM VIEW

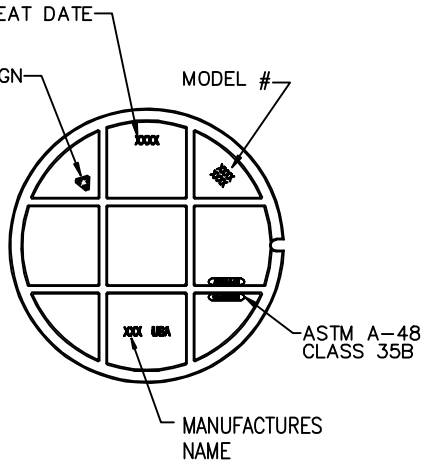

COVER WT. (CL. 35) – 210 LBS

FRAME WT. (CL. 35) – 227 LBS

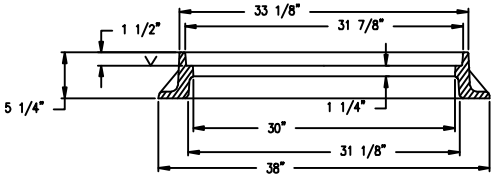

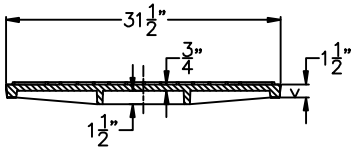

30" MANHOLE FRAME AND COVER

NOTE:

LETTERING ON MANHOLE COVER TO CONTAIN NAME OF AGENCY AND UTILITY FOR WHICH MANHOLE IS NEEDED, (I.E. "PHOENIX SANITARY SEWER"), OR AS DIRECTED. THE TOTAL WIDTH OF INDIVIDUAL LETTERS TO BE SUCH THAT LETTERS AND WORDS ARE EQUALLY SPACED AND BALANCED TO FORM A COMPLETE CIRCLE WITH SPACERS BEFORE AND AFTER THE WORD IDENTIFYING THE AGENCY INVOLVED. LETTERS TO BE 2" IN HEIGHT AND RAISED FLUSH W/ TOP OF COVER. TYPE OF LETTERS TO BE SUBMITTED FOR APPROVAL. WEIGHT OF CASTINGS SHALL BE NO MORE THAN 2% LESS THAN THE APPROXIMATE WEIGHT SPECIFIED. CASTINGS SHALL CONFORM TO ASTM A–48, CLASS 35 AND AASHTO M306. THE BEARING SURFACES OF THE FRAMES AND COVERS SHALL BE MACHINED AND THE COVERS SHALL SEAT FIRMLY WITHOUT ROCKING.

DETAIL NO.				REVISED	DETAIL NO.
424–2	MARICOPA ASSOCIATION of GOVERNMENTS	STANDARD DETAIL ENGLISH	30" CAST IRON MANHOLE FRAME AND COVER	05–26–2011	424–2

BOTH 24" AND 30" FRAMES TO BE ANCHORED AS FOLLOWS:

1. 1/2" HOLE IN FILLET.
2. 1/4" STAINLESS STEEL CABLE. SECURE WITH CABLE CLAMPS
3. 1/2"x9" HOOK AND EYE TURNBUCKLE.
4. 1/2" EYE BOLT WITH 1" DIA. EYE.
5. TRIPLE WRAP TURNBUCKLES AND CABLE CLAMPS WITH 1" WIDE TAPE, SAFE-T-CLAD, F.O.S. 655, OR APPROVED EQUAL.

FOR ANCHORING INSTALL 3 CABLES FOR 24" AND 4 CABLES FOR 30"

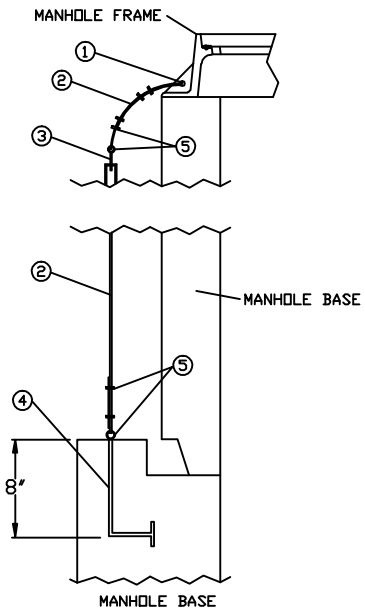

FRAME TOP VIEW

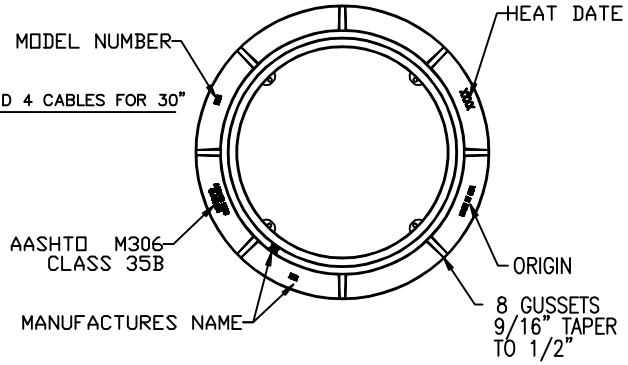

COVER TOP VIEW

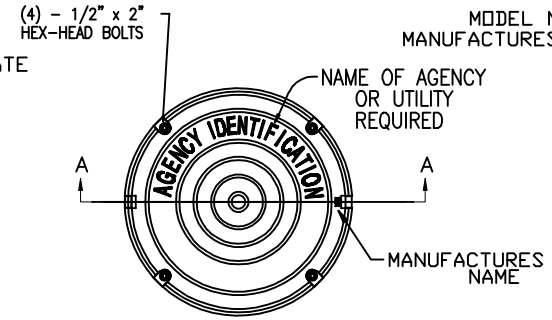

COVER BOTTOM VIEW

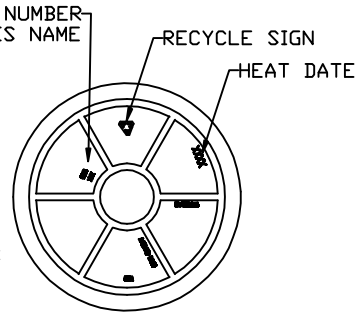

FRAME WT. (CL. 35) - 130 LBS

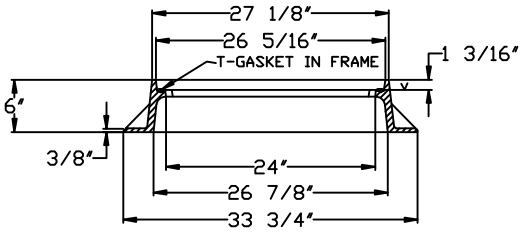

TOP VIEW

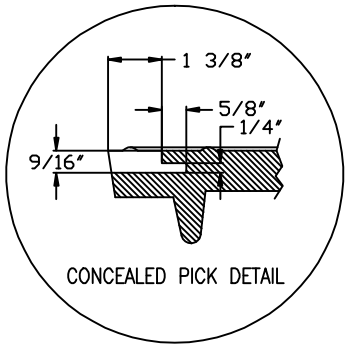

BOTTOM VIEW

COVER WT. (CL. 35) - 188 LBS

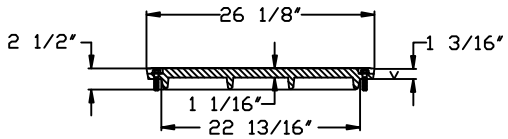

24" PRESSURE MANHOLE FRAME AND COVER

NOTE:

LETTERING ON MANHOLE COVER TO CONTAIN NAME OF AGENCY AND UTILITY FOR WHICH MANHOLE IS NEEDED, (I.E. "PHOENIX SANITARY SEWER"), OR AS DIRECTED. THE TOTAL WIDTH OF INDIVIDUAL LETTERS TO BE SUCH THAT LETTERS AND WORDS ARE EQUALLY SPACED AND BALANCED TO FORM A COMPLETE CIRCLE WITH SPACERS BEFORE AND AFTER THE WORD IDENTIFYING THE AGENCY INVOLVED. LETTERS TO BE 2" IN HEIGHT AND RAISED FLUSH W/ TOP OF COVER. TYPE OF LETTERS TO BE SUBMITTED FOR APPROVAL. WEIGHT OF CASTINGS SHALL BE NO MORE THAN 2% LESS THAN THE APPROXIMATE WEIGHT SPECIFIED. CASTINGS SHALL CONFORM TO ASTM A-48, CLASS 35 AND AASHTO M306. THE BEARING SURFACES OF THE FRAMES AND COVERS SHALL BE MACHINED AND THE COVERS SHALL SEAT FIRMLY WITHOUT ROCKING.

FRAME AND COVER TO BE DRILLED AND TAPPED IN SETS.
FOR ANCHORING INSTALL 3 CABLES FOR 24" AND 4 CABLES FOR 30"

DETAIL NO.				REVISED	DETAIL NO.
523-2	MARICOPA ASSOCIATION of GOVERNMENTS	STANDARD DETAIL ENGLISH	WATER TIGHT 24" CAST IRON PRESSURE MANHOLE FRAME AND COVER	05-26-2011	523-2

FRAME TOP VIEW

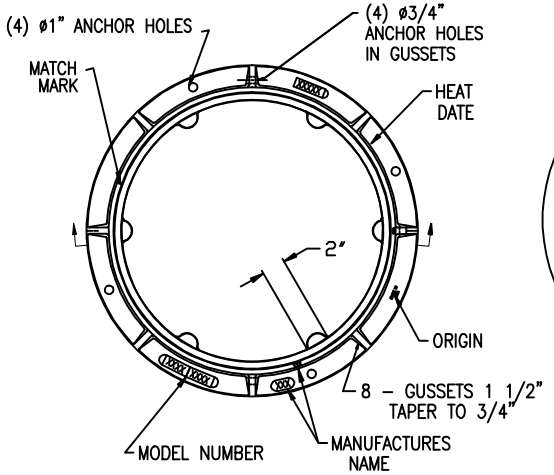

FRAME BOTTOM VIEW

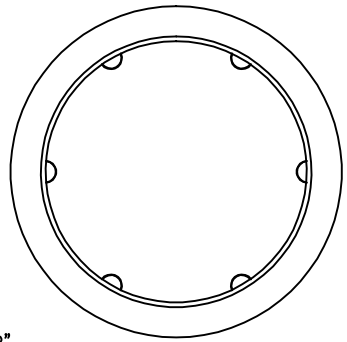

COVER TOP VIEW

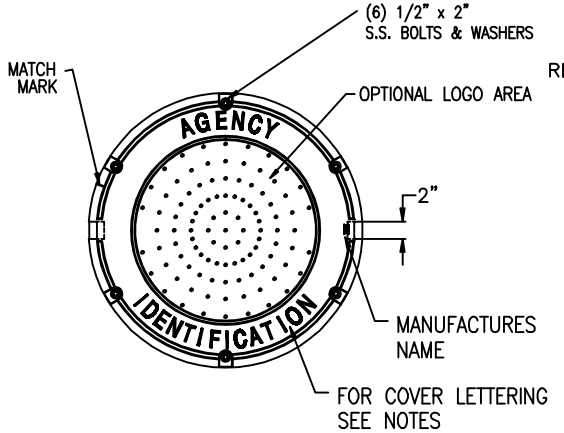

COVER BOTTOM VIEW

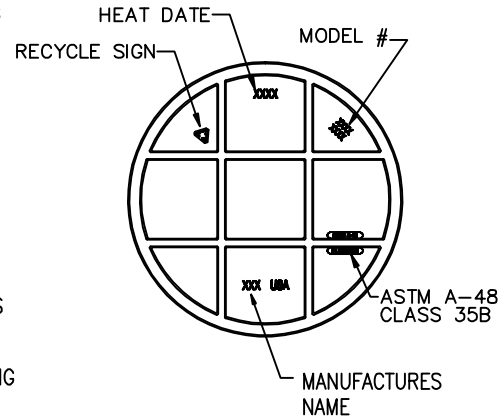

COVER WT. (CL. 35) – 210 LBS

FRAME WT. (CL. 35) – 227 LBS

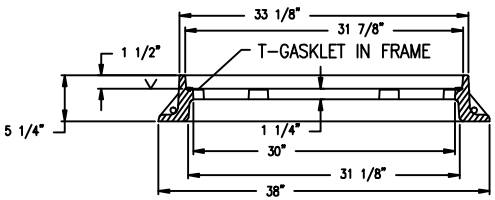

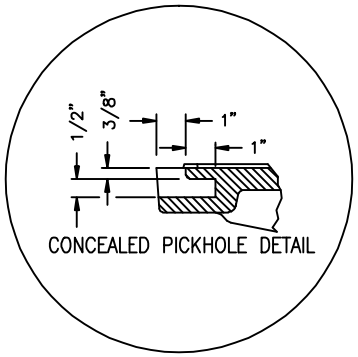

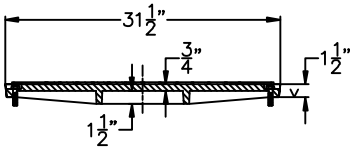

30" PRESSURE MANHOLE FRAME AND COVER

NOTE:

LETTERING ON MANHOLE COVER TO CONTAIN NAME OF AGENCY AND UTILITY FOR WHICH MANHOLE IS NEEDED, (I.E. "PHOENIX SANITARY SEWER"), OR AS DIRECTED. THE TOTAL WIDTH OF INDIVIDUAL LETTERS TO BE SUCH THAT LETTERS AND WORDS ARE EQUALLY SPACED AND BALANCED TO FORM A COMPLETE CIRCLE WITH SPACERS BEFORE AND AFTER THE WORD IDENTIFYING THE AGENCY INVOLVED. LETTERS TO BE 2" IN HEIGHT AND RAISED FLUSH W/ TOP OF COVER. TYPE OF LETTERS TO BE SUBMITTED FOR APPROVAL. WEIGHT OF CASTINGS SHALL BE NO MORE THAN 2% LESS THAN THE APPROXIMATE WEIGHT SPECIFIED. CASTINGS SHALL CONFORM TO ASTM A-48, CLASS 35 AND AASHTO M306. THE BEARING SURFACES OF THE FRAMES AND COVERS SHALL BE MACHINED AND THE COVERS SHALL SEAT FIRMLY WITHOUT ROCKING.

DRILL AND TAP (6) 1/2" x 2" BOLTS AND S.S. WASHERS. COVER AND FRAME MUST BE MATCH MARKED, DRILLED AND TAPPED IN SETS. DIM.'S, WEIGHTS LETTERING AND MATERIALS SHALL CONFORM TO DET. 424. REFER TO 523-2 FOR INSTALLATION PROCEDURES.

DETAIL NO.				REVISED	DETAIL NO.
523-3	MARICOPA ASSOCIATION of GOVERNMENTS	STANDARD DETAIL ENGLISH	WATER TIGHT 30" CAST IRON PRESSURE MANHOLE FRAME AND COVER	05-26-2011	523-3

Case 11-20

DATE: July 13, 2011

TO: MAG Specifications and Details Committee Members

FROM: Warren White, City of Chandler

RE: **Update MAG specifications for brass and bronze water line construction materials to meet federal low lead standards.**

Purpose: Modify MAG specifications to meet the national standards based on the new NSF 61-8 Annex F & G (effective on July 1, 2012) and the new Federal Law S. 3874 (effective on January 4, 2014).

Revisions: Modify Sections 610, 630, 631, 754 and 755 as noted herein.

SECTION 610

WATER LINE CONSTRUCTION

610.1 DESCRIPTION:

The construction of all water lines shall conform to applicable standard specifications and details, except as otherwise required on the plans or as modified in the special provisions.

610.2 GENERAL:

All pipe shall be delivered, handled and installed in accordance with the manufacturer's recommendations and/or applicable provisions of AWWA standards for installation of the various types of water mains specified, insofar as such recommendations and provisions are not in variance with the standard specifications and details.

Where water lines are to be constructed in new subdivisions or in conjunction with street repaving projects, the streets shall be pre-graded to within 6 inches of the new street subgrade prior to trenching or cut stakes shall be set for trenching.

610.3 MATERIALS:

All pipe for water lines shall be of the classes shown on the plans or as specified below.

(A) The 4 inches through 16 inches diameter pipe may be asbestos-cement or ductile iron, except where a particular material is specified. All pipe shall be minimum 150 P.S.I. design unless otherwise specified.

(B) Pipe 16 inches and larger may be either ductile iron, or concrete pressure pipe-steel cylinder type.

Ductile iron water pipe and fittings - Section 750. Asbestos-cement water pipe and fittings - Section 752. Concrete pressure pipe-steel cylinder type - Section 758.

Service Material containing Brass or Bronze must comply with the current NSF 61-8 Standards at the time the Project begins.

All Brass or Bronze service material must meet the current AWWA C-800 Standards and be made in the USA or Canada.

Any product used in water line construction containing brass or bronze that comes in contact with potable water shall meet the current NSF Standards and Federal Law

610.4 CONSTRUCTION METHODS:

All water mains in major streets shall have a minimum cover of 48 inches over the top of the pipe. Water mains in other locations shall have a minimum cover over the top of the pipe as follows:

(A) 36 inches for mains smaller than 12 inches.

(B) 48 inches for mains 12 inches and larger.

Cover for water mains will be measured from existing or proposed finished grade of pavement or from natural ground, whichever is deeper.

No water main shall be deflected, either vertically or horizontally, in excess of that recommended by the manufacturer of the pipe or coupling, without the appropriate use of bends or offsets.

If adjustment of the position of a length of pipe is required after it has been laid, it shall be removed and rejoined as for a new pipe.

Every precaution shall be taken to prevent foreign material from entering the pipe. When on the project site, the ends of the pipe section shall be plugged, wrapped or tarped at all times when pipe laying is not in progress, which includes storage and staging at the site. The pipe shall be stored on a pallet, blocking or other means to prevent foreign materials from entering

Valves 20 inches and smaller may be furnished with flanged ends, mechanical joint ends, or push-on joint ends compatible with the type of pipe used, unless otherwise noted.

630.3.2 Supplements Specifically Relating to Valve Sizes:

(A) Valves smaller than 3 inches:

Valves shall ~~be Jones, Ford, Hayes, Mueller or an approved equal, and shall~~ be threaded, all bronze, standard double disc, non-rising stem with wheel handles ~~-~~or brass ball style.

Service Material containing Brass or Bronze must comply with the current NSF 61-8 Standards at the time the Project begins.

All Brass or Bronze service material must meet the current AWWA C-800 Standards and be made in the USA or Canada.

(B) Valves 3 inches through 12 inches:

Valves shall be iron body resilient-seated gate valves in accordance with the latest revision of AWWA C-509 or AWWA C-515.

The valve shall be designed to work equally well with pressure on either side of the gate.

The valve shall be equipped with o-ring packing.

(C) Valves. 14 inches through 20 inches:

Valves shall be iron body resilient-seated gate valves in accordance with the latest revision of AWWA C-509 or AWWA C-515, or shall be double-disc gate in accordance with AWWA C-500.

Valves designed in accordance with AWWA C-509 shall be designed to work equally well with pressure on either side of the gate

Valves designed in accordance with AWWA C-500 shall be equipped with bronze tracks, rollers and scrapers. The bolts, nuts, studs, etc., used with the gear case shall conform the requirements for Bonnet Bolting in AWWA C-500.

Valves shall be for operation in a horizontal position. The valve shall have bevel gears. The gears and stuffing box shall be enclosed in a watertight iron case, for operation in a buried location. The case shall be filled with grease at the factory.

By-pass valves shall be furnished and installed on each valve unless otherwise indicated on the approved plans. See Table 630-1 for by-pass valve sizes.

(D) Valves 24 inches and larger:

Valves shall be double-disc gate in accordance with AWWA C-500.

Valves shall be for operation in the horizontal position and equipped with bronze tracks, rollers and scrapers. Valves shall have bevel gears. The gears and stuffing box shall be enclosed in a watertight iron case, for operation in a buried location. Bolts, nuts, studs, etc., used with the gear case shall conform to the requirements for Bonnet Bolting in AWWA C-500. The case shall be filled with grease to the factory.

By-pass valves shall be furnished and installed on each valve unless otherwise indicated on the approved plans. See Table 630-1 for by-pass valve sizes.

630.4 TAPPING SLEEVES AND VALVES:

SECTION 631

WATER TAPS AND METER SERVICE CONNECTIONS

631.1 DESCRIPTION:

This specification covers work by Contractors installing water services in new subdivisions by Permit and in projects under Contract. All the materials used shall comply with applicable standard specifications and the work performed in accordance with these specifications and standard details. The service connections shall be complete and all material shall be furnished by the Contractor except for the water meter.

All water service connections shall be constructed of Type K copper tubing or ultra high molecular weight polyethylene pipe of nominal iron pipe outside diameter.

All new subdivision water lines shall be staked for line and grade at 100 foot intervals by the Developer's Engineer prior to construction. All meter locations shall be staked by setting two stakes for line and marking one of the stakes for grade.

631.2 MATERIALS:

Copper pipe, tubing and fittings shall conform with Section 754. Polyethylene pipe shall conform with Section 755.

All fittings, pipe and tubing for polyethylene and copper pipe shall be as noted on standard details and as indicated in Section 610.3 Materials.

631.3 INSTALLATIONS:

631.3.1 General: Installation of copper tubing for meter service connections shall be in accordance with Section 754.

Meter service connection with copper tubing shall be in accordance with standard details.

The water service connection shall include the tap on the main, the corporation stop, the saddle if applicable, service pipe, appurtenant fittings, the curb stop, meter box and meter box cover, in accordance with standard details. Water meter boxes shall be installed in accordance with standard details to line and grade set by the Developer's Engineer. Upon acceptance, the Developer shall be responsible for damage to water meter boxes and covers until such time as the meters are installed by the Contracting Agency.

After the installation and acceptance of the water main and meter service pipe connections the water meter will be installed by the Contracting Agency upon proper application and payment of prevailing fees.

631.3.2 Standards: Except as otherwise specified all work shall be done in accordance with Sections 601 and 610.

631.3.3 Excavation and Backfill: The backfilling and compaction may be done as soon as the service line is installed, except backfilling and compaction shall not be completed around the corporation stop at the main water line until after inspection and recording of all tap locations. Trench bottom must be smooth and free of sharp objects. The minimum width of trench for water service pipe shall be 3 inches. The minimum depth of service pipe shall be 30 inches below the finished paving grade.

631.3.4 Polyethylene Pipe: Polyethylene pipe shall not be kinked, gouged or damaged during installation and backfilling operations. The pipe shall be placed in the trench allowing at least 12 inches per 100 feet for thermal contraction and expansion. Polyethylene pipe has a high thermal expansion and should never be confined under tension. The pipe should not be stored in the sun or left in the trench under abnormal high temperature. The pipe shall be carefully snaked in the trench bottom and covered up with uniform slack throughout its length. In trenches less than 8 inches in width, the expansion shall be obtained by making the tap on the opposite side of the main from the water meter and providing a loop of slack service pipe back over the top of the water main. Before installing, inspect pipe to detect any damage that may be caused by shipping, storage or handling. Damage spots can be cut out and pipe recoupled with Ford C-66-33, C-66-44, or approved equal brass compression fitting to form a continuous length. Damaged pipe shall not be used. Polyethylene pipe shall be cut only with a tubing cutter with rollers properly designated for the size of pipe being cut. When polyethylene pipe is used, the meter box setting must be placed parallel to the back of the sidewalk in accordance with standard details. Polyethylene pipe shall be installed with large sweeping bends with radius of not less than 18 inches. Polyethylene pipe has a cold flow

SECTION 754

COPPER PIPE, TUBING AND FITTINGS

754.1 PIPE AND TUBING:

All copper pipe and tubing shall be new seamless copper pipes and tubes, designed for underground water services, plumbing purposes, etc. They shall conform to all the requirements of ASTM B-88, Type K.

All pipe or tubing shall be made of copper free from cuprous oxide, as determined by microscopic examination at a magnification of 75 diameters.

Type K tubing, when furnished in coil, shall be annealed after coiling.

754.2 FITTINGS:

All fittings used in connection with copper pipe or tubing, shall be copper or bronze fittings ~~as manufactured by Jones, Mueller, or approved equal,~~ as shown on standard details.

Service Material containing Brass or Bronze must comply with the current NSF 61-8 Standards at the time the Project begins.

All Brass or Bronze service material must meet the current AWWA C-800 Standards and be made in the USA or Canada.

SECTION 755

POLYETHYLENE PIPE FOR WATER DISTRIBUTION

755.1 GENERAL:

This specification is intended to describe water service pipe with a hydrostatic design stress of 620 psi for water at 73.4 °F. produced from a high density ultrahigh molecular weight polyethylene pipe compound. Polyethylene pipe used for water distribution shall conform to all the requirements of ASTM D-2239 and with the additional provisions listed herein. This specification describes pipe of the nominal I.D. and O.D. size as manufactured by Carlon, Celanese, Orangeburg, Phillips 66 Drisco pipe and Triangle Aycee and shall provide a water pressure tight joint when used with compression type fittings ~~furnished by Hays, Haystite, Ford Meter Box, Ford Pack Joint, or approved equal.~~

Service Material containing Brass or Bronze must comply with the current NSF 61-8 Standards at the time the Project begins.

All Brass or Bronze service material must meet the current AWWA C-800 Standards and be made in the USA or Canada.

Pipe may be rejected for failure to comply with any requirements of these specifications.

755.2 MATERIAL:

The polyethylene extrusion compound from which the pipe is extruded shall meet the requirements of Type III, Grade 34, Class C, material as described in ASTM D-1248, except that the melt index shall be determined under a higher temperature than ASTM D-1238. The test condition shall be as specified below under tests of pipe.

The pipe shall be homogeneous throughout and free of visible cracks, holes, foreign inclusions or other defects. The pipe shall be uniform in color, opacity, density, and other physical properties.

755.3 PIPE DIMENSION AND TOLERANCES:

The average inside diameters, wall thickness, and respective tolerances shall be, for any cross section, as shown in ASTM D-2239, when measured in accordance with ASTM D-2122.

The standard thermoplastic pipe dimension ratio (SDR), the ratio of the pipe diameter to wall thickness, shall not exceed 7 for 160 psi design pressure.

755.4 MINIMUM BURST PRESSURE:

The minimum burst pressure for pipe made from Type III, Grade 34, Class C, polyethylene compound, Designation Code: PE-3406, when determined with at least 5 specimens shall be at least equal to 630 psi for water at 73.4°F. Pressures shall be determined in accordance with ASTM D-1599.

755.5 SUSTAINED PRESSURE:

In addition to passing the sustained pressures given in ASTM D-2239 for a temperature of 100°F. and 73.4°F. the pipe shall withstand, without failing, ballooning, bursting or weeping for a period of at least 300 hours, at 194 ± 2°F., 113 psi test pressure for 3/4 inch pipe and 112 psi for 1 inch pipe. These test pressures have been calculated on a basis of a 450 psi fiber stress. The test procedure outlined in ASTM D-1598, shall be followed.

755.6 TESTS OF PIPE:

The pipe must be able to meet all tests that are specified in ASTM D-2239, and the following test for melt index, as determined in ASTM D-1238. Pellets of the original resin, placed into the testing device shall have flow rates as follows:

(A) Less than 0.5 grams per 10 minutes at 310°C with a plunger load of 27.5 pounds for pipe or tubing extruded by the Allied Chemical Process.

Case 11-21

Incorporate Phoenix Supplement Section 623

Sponsor: Syd Anderson, City of Phoenix

SECTION 623

SPECIAL BEDDING FOR MAINLINE STORM DRAIN PIPE
Adding in entirety

The Contractor **shall** utilize a commercial-source cement-enriched slurry aggregate base course bedding from the outside bottom of the pipe to the springline of the pipe for all mainline storm drain pipe, except cast-in-place pipe. The slurry aggregate base course shall be per MAG Specification Section 728. The slurry shall have a minimum 8-inch slump, and a minimum of 25 psi compressive strength and a maximum of 100 psi based on a 28 day test. Cement slurry aggregate base course bedding is not required for catch basin connector pipes.

Only commercial-source cement-enriched slurry ABC will be allowed. Batch mixing of slurry on-site by the Contractor will not be allowed. The Contractor shall submit the commercial source mix design for cement-enriched slurry ABC at the pre-construction meeting, along with all other required commercial mix designs.

The Contractor, **at his option**, may excavate a trench having a cross-section with a rounded bottom rather than a flat bottom. If this option is chosen, the trench cross-section must maintain a minimum of 6-inches between the outside wall of the pipe and the trench wall. The minimum trench width at the springline for each side of the pipe, as specified in Section 601, may be reduced to 6-inches for all pipe sizes if this option is used.

The Contractor, **at his option**, may use cement-enriched slurry aggregate base course for the bedding material specified in the City of Phoenix Supplement to MAG Section 601.3.2 **from the springline to one (1) foot over the outside top of pipe**.

If the Contractor elects to use corrugated steel (CSP) or high density polyethylene (HDPE) storm drain pipe, the Contractor shall use cement-enriched slurry aggregate base course material for the entire pipe bedding, to one (1) foot over the outside top of pipe—no option.

There will be no separate measurement or payment for special cement-enriched slurry aggregate base course bedding. The cost shall be considered incidental to the cost of the pipe.

Case 11-22

DATE: July 13, 2011

TO: MAG Specification and Details Committee Members

FROM: Jeff Benedict, Asphalt Working Group/AGC

RE: Section 325 and 717

PURPOSE: Separate material and construction methods and give guidance to rubber specification

REVISIONS:
a) Updated required equipment and density procedures
b) Compaction procedures clarified
c) Updated rubber materials along with physical properties

SECTION 325

PLACEMENT AND CONSTRUCTION OFASPHALT-RUBBER CONCRETE OVERLAY, GAP GRADED

325.1 DESCRIPTION:

Asphalt-rubber concrete consists of supplying, placing and compaction of plant-mixed, gap-graded asphalt-rubber concrete over asphalt surfaces. The thickness of the finished asphalt-rubber concrete overlay shall be within the range of one to two inches as shown on the plans or as specified in the special provisions. ~~Asphalt-Rubber Concrete Mixes may be used for low or high traffic conditions, as determined by the agency. Low traffic conditions are conditions where the asphalt mix will be subject to low volume and low weight vehicle usage. Examples of this condition are residential streets, most parking lots and residential minor collector streets. High traffic conditions are conditions where the asphalt mix will be subject to high volume and/or heavy weight vehicle usage as found on major collector, arterial and commercial streets. Street classifications (i.e. minor collector and major collector) shall be determined by the specifying agency.~~

325.2 MATERIALS:

Asphalt-rubber concrete shall consist of a mixture of aggregate, mineral admixture and asphalt-rubber binder as specified in Section 717.

325.2.1 Mixing of Asphalt-Rubber: The temperature of the asphalt-cement shall be between 375°F and 425°F prior to the addition of rubber. No agglomerations of rubber particles in excess of 2" in the least dimension shall be allowed in the mixing chamber. The ground rubber and asphalt-cement shall be accurately proportioned in accordance with the asphalt-rubber binder design and thoroughly mixed prior to the beginning of the one-hour reaction period. Reaction time may be decreased to 45-minutes if documentation is provided that the physical properties of the mix design requirements are consistently met using a 45-minute reaction period. The Contractor or supplier shall document that the proportions are accurate and that the rubber has been uniformly incorporated into the mixture. Additionally, the Contractor or supplier shall demonstrate that the rubber particles have been thoroughly mixed such that they have been "wetted." The occurrence of rubber floating on the surface or agglomerations of rubber particles shall be evidence of insufficient mixing. The temperature of the asphalt-rubber immediately after mixing shall be between 350°F and 400°F. Reaction time shall start after all of the material for the batch has been mixed and the minimum reaction temperature of 350°F has been achieved.

Prior to use, the viscosity of the asphalt-rubber shall be tested by the use of a rotational viscometer, which is to be furnished by the Contractor or supplier. The Contractor or supplier shall provide a qualified person to perform the testing.

325.2.2Handling of Asphalt-Rubber: Once the asphalt-rubber binder has been mixed, it shall be kept thoroughly agitated during periods of use to prevent settling of the rubber particles. During the production of asphaltic concrete the temperature of the asphalt-rubber binder shall be maintained between 163°C (325°F) and 204°C (400°F). However, in no case shall the asphalt-rubber binder be held for more than 10 hours at these temperatures. It shall be allowed to cool to a temperature of 121°C (250°F) or less and held at that temperature for not more than four days. The process of cooling and reheating shall not be allowed more than one time for a batch of asphalt rubber binder.

For each load or batch of asphalt-rubber binder, the Contractor or supplier shall provide the Engineer with the following documentation:

(A) The source, grade, amount and temperature of the asphalt cement prior to the addition of rubber.

(B) The source and amount of rubber and the rubber content expressed as percent by the weight of total asphalt rubber binder.

(C) Times and dates of the rubber additions and resultant viscosity test.

(D) A record of the temperature, with time and date reference for each load or batch. The record shall begin at the time of the addition of rubber and continue until the load or batch is completely used. Readings and recordings shall be made at every temperature change in excess of 20°F, and as needed to document other events which are significant to batch use and quality.

325.3 WEATHER AND MOISTURE CONDITIONS:

Asphalt-rubber concrete shall be placed only when the surface is dry, and when the atmospheric temperature in the shade is 55°F or above. No asphalt-rubber concrete shall be placed when the weather is foggy or rainy. Asphalt-rubber concrete shall be placed only when the Engineer determines that weather conditions are suitable.

325.4 APPLICATION OF TACK COAT:

A tack coat shall be applied to all existing and to each new course of asphalt concrete prior to the placing of a succeeding lift of asphalt-rubber concrete. The tack coat may be deleted when a succeeding layer of asphalt-rubber concrete is being applied over a freshly laid course that has been subjected to very little traffic when approved by the Engineer.

The application of the tack coat shall comply with Section 329. The grade of emulsified asphalt shall be SS-1h or CSS-1h as specified in Section 713.

The same material that is specified above for the tack coat shall be applied to the vertical surfaces of existing pavements, curbs, and gutters, against which asphalt concrete is to be placed.

The surface to be covered may require repair or patching as directed by the Engineer. This shall be addressed in the project specifications prior to the bidding of the project.

325.5 MIX PRODUCTION:

All materials shall be proportioned by weight in a hot mix asphalt plant in the proportions required by the mix design to provide a homogeneous and workable mass. Each hot mix asphalt plant shall be inspected in accordance with the provisions contained in the 'Hot Mix Asphalt Production Facilities' by the Arizona Rock Products Association and shall have a current inspection certificate. All measuring devices shall be calibrated at least annually by a technician licensed by the Arizona Bureau of Weights & Measures. Mixing plants shall conform to the requirements of AASHTO M-156, except as modified herein.

325.6 TRANSPORTATION:

Petroleum distillates or other substances that will have a detrimental effect on the asphalt concrete shall not be used as a release agent.

The beds of all transportation units shall be clean and smooth to allow the free flow of material into the paving machine's hopper.

Tarpaulins shall be furnished on all trucks and used when weather condition warrant, or if directed by the Engineer.

325.7 PLACEMENT:

325.7.1 Surface Preparation:

Before placing asphalt-rubber concrete on existing pavements, severely raveled areas or cracked areas that are depressed more than 3/4" from the adjoining pavement shall be cut out and patched at least 48 hours prior to the resurfacing operation. Over-asphalted (bleeding or flushing) areas or rough high spots shall be removed by burning

or blading. Large shrinkage cracks shall be filled with asphalt sealing compound acceptable to the Engineer. The entire surface shall be cleaned with a power broom. Raveled areas that do not require removing shall be cleaned by hand brooming. The above surface cleaning requirements are included as part of the Asphalt-Rubber Concrete paving operations, and the cost thereof shall be included in the Asphalt-Rubber Concrete pay item. Pavement repairs and crack sealing when required are to be compensated for by other appropriate contract pay items.

Prior to placing the asphalt-rubber concrete on milled surfaces, pot-holes left by the milling operation shall be repaired by the Contractor, as a related non-pay item and as required by the Engineer. The milled area shall be swept.

After surfaces have been prepared to the satisfaction of the Engineer, they shall receive a tack coat as specified in Section 325.~~5~~4.

Traffic will not be permitted over surfaces which have received a tack coat. When the overlay is to extend onto a concrete surface, the concrete surface shall be thoroughly cleaned of loose dust and cement particles and shall be tack coated.

325.7.2 Placing and Construction Methods:

All courses of asphalt-rubber concrete shall be placed and finished by means of a self-propelled paving machine equipped with an automatically actuated control system, except under certain conditions or at locations where the Engineer deems the use of a self-propelled paving machine impracticable.

The control system shall control the elevation of the screed at each end by controlling the elevation of one end directly and the other end indirectly either through controlling the transverse slope or alternatively when directed, by controlling the elevation of each end independently.

The control system shall be capable of working with one of the following devices:

(A) Ski or non-contact device of not less than 30 feet in length, supported throughout its entire length
(B) Taut stringline or wire set to grade
(C) Short ski or sonar sensing units from curb control
(D) Joint matching shoe

Failure of the control system to function properly shall be cause for the suspension of asphalt concrete production. In order to achieve a continuous operation, the speed of the paving machine shall be coordinated with the hot mix plant and transport units.

If the asphalt-rubber concrete is dumped from the hauling vehicles directly into the paving machine, care shall be taken to avoid jarring the machine or moving it out of alignment. No vertical load shall be exerted on the paving machine by the truck.

If asphalt-rubber concrete is dumped upon the surface being paved and subsequently loaded in the paving machine, the loading equipment shall be self-supporting and shall not exert any vertical load on the paving machine. Substantially all of the asphalt concrete shall be picked up and loaded into the paving machine. If asphalt-rubber concrete is placed in a windrow during paving, the windrow shall not exceed a distance greater than 150 feet in front of the paving machine.

Self-propelled paving machines shall spread the mixture without segregation or tearing, true to line, grade and crown indicated on the Project plans. Pavers shall be equipped with hoppers and augers that will distribute the mixture uniformly in front of an adjustable floating screed. The raising of the hopper wings must be minimized and the paving machine will not be operated when in an empty condition.

Screeds shall include any strike-off device operated by tamping or vibrating action which is effective, without tearing, shoving or gouging the mixture and which produces a course with a uniform texture and density for the full width being paved. Screeds shall be adjustable as to height and crown and shall be equipped with a controlled heating device for use when required. In the case of the screed, auger extensions and vibrators shall be installed wherever the screed is extended more than one (1) foot beyond the end of the base auger or auger extension.

However, when placing material against an extremely uneven curb or edge over a short distance, the Engineer may waive the auger extensions and vibrators.

325.7.3 Compaction: It is the contractor's responsibility to perform any desired Quality Control monitoring and/or testing during compaction operations to achieve the required compaction. The temperature of the asphalt-rubber concrete immediately behind the laydown machine shall be at least 275 °F. A probe type electronic thermometer with a current calibration sticker attached will be used to measure the temperature of the asphalt concrete mixture. When measuring the temperature of the mat, the probe shall be inserted at mid-depth and as horizontal as possible to the mat. When the pavement lift is less than 1.5-inches, the temperature of the material shall be measured in the truck by inserting a calibrated probe type electronic thermometer, or other approved measuring device, to a point at least 6" below the surface of material.

Asphalt compaction equipment shall be of sufficient size and weight to accomplish the required compaction. All compaction equipment shall be operated and maintained in accordance with the manufacturer's recommendations and the project requirements. Pneumatic tired compactors shall not be used.

The Engineer will determine the acceptability of the pavement compaction in accordance with Section 325.10. At any place not accessible to the roller, the mixture shall be thoroughly compacted with tampers to provide a uniform and smooth layer over the entire area compacted in this manner.

325.7.4 Lime Water: An application of lime water shall be applied by the Contractor to the compacted asphalt rubber concrete surface after final compaction, prior to opening the roadway to traffic, or when requested by the Engineer to cool the pavement to prevent tracking and pick-up. The lime water solution shall be applied at the rate of approximately ½ gallon/square yard. The lime shall be mixed using a minimum of (1) one 50-pound bag per 3,000 gallons of water.

325.7.5 Adjustments: After installation of an overlay course all necessary frame and cover adjustments for manholes, valve boxes, survey monuments, sewer clean-outs, etc., shall be completed by the Contractor within the given segments being surfaced.

On roads without curb and gutter, the existing shoulder elevation shall be adjusted by the Contractor to match the elevation at the edge of new overlay and slope away from the new pavement surface at a rate that the existing quantity of shoulder material will allow. Shoulder material includes the existing shoulder, millings, untreated base materials, or a granular material approved by the Engineer. Shoulder material shall be compacted to a minimum of 95% of maximum density, determined in accordance with section 301.3.

325.8 QUALITY CONTROL:

It is the contractor's responsibility to perform Quality Control monitoring and/or testing during asphalt-rubber concrete production to achieve the required compaction and to perform Quality Control monitoring and/ or testing during asphalt-rubber concrete production to achieve the required mix properties. The Engineer may obtain samples of any portion of any material at any point of the operations for his own use. Also, the Engineer may order that the use of any drying, proportioning and mixing equipment or the handling of any material be discontinued which, in his/her opinion, fails to produce a satisfactory mixture.

The asphalt-rubber concrete produced shall conform to the requirements of the production tolerances established in section 325.~~10~~9. When the asphalt-rubber concrete does not conform to the production tolerances, it shall be reported to the Engineer, and corrective quality control measures shall be implemented, or production shall cease immediately at no additional cost to the contracting Agency or Engineer.

325.9 ACCEPTANCE:

325.9.1 Acceptance Criteria: Unless otherwise specified, asphalt-rubber concrete will be divided into 500 ton increments for the purpose of acceptance. Generally, a minimum of one sample will be obtained from each 500 tons of production or fraction thereof for determination of binder content and gradation. Tests used to determine acceptance will be performed by the Engineer or a laboratory employed by the Engineer. In either case the laboratory shall be accredited by the AASHTO Accreditation Program (AAP), for the tests being performed. All acceptance samples shall be taken using random tonnages, locations or times as designated by the Engineer in

accordance with ASTM D 3665. Acceptance testing results will be furnished to the contractor within five working days of receipt of samples by the acceptance laboratory.

325.9.2 Gradation, Binder Content and Air Voids:

325.9.2.1 Mineral Aggregate Gradation: For each approximate 500 tons of asphalt-rubber concrete produced, at least one sample of mineral aggregate will be taken. Samples will be taken in accordance with the requirements of Arizona Test Method 105 on a random basis. For batch plants, the sample shall be taken from the hot bins. For plants other than batch plants, the sample shall be taken from the cold feed belt. Samples will be taken by means of a sampling device which is capable of obtaining representative samples. The device, which shall be approved by the Engineer, shall be furnished by the contractor. In any shift that the production of asphalt-rubber concrete is less than 500 tons, at least one sample will be taken.

Samples will be tested for conformance with the mix design gradation, with or without mineral admixture as appropriate, in accordance with the requirements of Arizona Test Method 201.

During production, the allowable deviations from the mix design gradation targets are listed in ~~the t~~Table~~s~~ 325-1 below. The allowable production tolerances may fall outside of the mix design gradation bands.

~~**TABLE 325-1**~~
~~**GRADATION ACCEPTANCE LIMITS FOR ASPHALT-RUBBER MIXES**~~

TABLE 325-1		
GRADATION ACCEPTANCE LIMITS FOR ASPHALT-RUBBER MIXES		
Sieve Size	1" & 1 ½" Lift Thickness	~~Asphalt-Rubber Mix~~2" Lift Thickness
1 inch	100%	~~±7~~100%
¾ inch	100%	±6%
~~⅜~~ ½ inch	±6%	±6%
~~⅜ inch~~	~~±6%~~	~~±6%~~
No. 4	±6%	±6%
No. 8	±6%	±6%
No. 30	±4%	±4%
No. 200	±2%	±2%

If the results from a single acceptance sample fall outside of the acceptance limits in Table 325-~~4~~1 a second sample shall be taken and if the second acceptance sample is also outside of the acceptance limits in Table 325-~~4~~1 the Contractor shall cease production of asphalt concrete. Production shall not begin again until calibration test results verify that adjustments made to materials or proportions yield a gradation that falls within acceptance limits in Table 325-~~4~~1.

325.9.2.2 Binder Content: During production of asphalt-rubber concrete, the contractor shall maintain at the plant site a nuclear asphalt content gauge calibrated and operated in accordance with Arizona Test Method 421. At the discretion of the Engineer, the Owner may choose to prepare the calibration samples for use by the contractor. Under the observation of the Engineer, the contractor shall determine the asphalt-rubber binder content by means of the nuclear asphalt content gauge a minimum of four times per full shift. The Engineer shall determine the times that the samples are taken. The contractor's technicians performing the testing, including the calibration of the nuclear gauge, shall meet the technician requirements given in the Arizona Department of Transportation (ADOT) System for the Evaluation of Testing Laboratories. The requirements may be obtained from ADOT Materials Group, 1221 North 21st Avenue, Phoenix, AZ 85009.

Production of asphalt-rubber concrete shall cease immediately and the plant and/or the nuclear asphalt content gauges re-calibrated if any single test result varies by an amount greater than ± 0.60, or the average of three consecutive test results varies by an amount greater than ± 0.40, from the amount determined by the mix design. Material that has already been produced may be used on the project if the single test value representative of that material varies by an amount from ± 0.61 to ± 0.75, inclusive, from the amount determined by the mix design. Material that has already been produced may not be used on the project if the single test value representative of that

material varies by an amount greater than ± 0.75 from the amount determined by the mix design unless, by retesting, the material is found to be acceptable.

When there is cause to question the asphalt-rubber binder content being obtained via nuclear asphalt content gauge, or if approved by the Engineer, the asphalt-rubber binder content may be determined using inventory data provided by the supplier as detailed in the following paragraphs. This will only apply for plants providing asphalt-rubber concrete exclusively for the subject project or if an asphalt cement tank is dedicated for the shift of asphalt-rubber concrete production.

The determination of the actual asphalt-rubber binder content by inventory methods may include weighing of asphalt cement deliveries, invoice quantities, volumetric tank measurements using a calibrated rod (tank stickings) corrected for temperature, computerized mass-flow meter, and accounting for wasted materials. If a computerized mass-flow meter is used, documentation of its calibration shall be submitted to the Engineer prior to asphalt-rubber concrete production. At any time during asphalt-rubber concrete production, the Engineer may require that a new calibration of the mass-flow meter be performed.

If there is a difference of greater than 0.2 percent asphalt-rubber binder between the asphalt-rubber binder content measured by nuclear asphalt content gauge testing and the actual asphalt-rubber binder content as determined by inventory, the contractor may request that the asphalt-rubber binder content be determined by inventory. The contractor must make such a request in writing within two working days after receiving the test results for the first day of asphalt-rubber concrete production.

325.9.2.3 Marshall Air Voids: For purposes of determining Marshall air voids, the acceptance laboratory will take one sample of the asphalt-rubber concrete in accordance with the requirements of Section 2(h) of Arizona Test Methods 104 or AASHTO T168 for each day's production or as directed by the Engineer's. The minimum weight of the sample shall be 45 pounds. The bulk density shall be tested in accordance with AASHTO T245. The maximum theoretical density shall be tested in accordance with the requirements of AASHTO T209, including fan drying per AASHTO T-209 Section 11. Effective voids determined on the laboratory compacted specimens will be determined in accordance with the requirements of AASHTO T269. Should the testing for effective air voids not meet the "Full Payment" or "No Corrective Action" requirements of Table 325-~~5~~2, additional testing for laboratory air voids on additional samples will be performed as necessary to determine the extent of the deficiency.

TABLE 325-2		
LABORATORY VOIDS ACCEPTANCE AND PENALTIES		
Marshall Air Voids (Measured at 75 blows) Deviation from Mix Design Target	When the contracting agency is the owner: Payment Reduction ($ per ton of asphalt concrete)	When the contracting agency is not the owner (i.e. permits): Corrective Action
± 0% to 1.8%	Full Payment	No corrective action
± 1.9% to 2.9%	$1.00	EA (see 321.10.6)
± 3.0% to 4.0%	$2.50	EA (see 321.10.6)
± Greater than 4.0%	Removal* or EA per 325.10.4	Removal* or EA per 325.10.4

Comment [DL1]: Consider expanding this to ±0 to2.0% due to the touchy nature of rubberized mixes.

Comment [DL2]: If the above is agreed upon, change this to ±2.1 to ±2.9%

325.~~10~~9.3 Density: The temperature of asphalt-rubber concrete just prior to compaction shall be at least 275 °F. ~~The wheels of compactors shall be wetted with water, or if necessary soapy water, or a product approved by the Engineer to prevent the asphalt-rubber concrete from sticking to the steel wheels during rolling.~~ The Engineer may change the rolling procedure if in the Engineer's judgment the change is necessary to prevent picking up of the asphalt-rubber concrete.

325.~~10~~9.3.1 Equipment: Asphalt compaction equipment shall be of sufficient size and weight to accomplish the required compaction. All compaction equipment shall be operated and maintained in accordance with the manufacturer's recommendations and the project requirements. ~~For courses greater than one inch in nominal thickness, a minimum of one static steel-wheel compactor and two vibratory steel-wheel compactors shall be provided; however, sufficient vibratory steel-wheel compactors shall be provided so that the drums of the compactors when staggered will cover the entire width of the paving machine. For courses of one inch or less in nominal thickness, a minimum of three static steel-wheel compactors shall be provided; however, sufficient~~

~~compactors must be provided so that the drums of the compactors when staggered will cover the entire width of the paving machine on the initial forward pass while a static compactor remains to complete final rolling. If the asphalt-rubber concrete production rate exceeds 250 tons per hour, an additional static steel-wheel compactor shall be provided. The compactors shall weigh not less than eight tons.~~

The compactors shall be self-propelled and shall be operated with the drive wheel in the forward position. The compactors shall weigh not less than eight tons. ~~Vibratory rollers shall be used in the mode required by the Engineer. Vibratory c~~Compactors shall not be used in the vibratory mode for courses of one inch or less in nominal thickness. The wheels of compactors shall be wetted with water, or if necessary soapy water, or a product approved by the Engineer to prevent the asphalt-rubber concrete from sticking to the steel wheels during rolling.
~~Pneumatic rollers shall not be used.~~

325.~~10~~9.3.2 Compaction Procedures

325.9.3.2.1 Pavement Lift Thickness 1 ½ Inches or Less: A minimum of three static steel-wheel compactors shall be provided; however, sufficient compactors must be provided so that the drums of the compactors when staggered will cover the entire width of the paving machine on the initial forward pass while a static compactor remains to complete final rolling. The roller(s) for final compaction shall follow as closely behind the initial breakdown as practical, such that a uniformly smooth surface is achieved. As many passes as are possible shall be made with the compactors before the temperature of the asphalt-rubber concrete falls below 220 °F.

325.9.3.2.2 Pavement Lift Thickness Greater than 1 ½ Inches:~~Rolling Procedure:~~ Achieving the required compaction is the responsibility of the contractor. The number and types of rollers is the contractor's responsibility and shall be sufficient to meet these requirements. ~~Vibratory compactors shall be used for initial breakdown on courses greater than one inch in nominal thickness. Static steel wheel compactors, or vibratory compactors in the static mode, shall be used for initial breakdown on courses one inch or less in nominal thickness.~~ Initial breakdown rollers shall follow as closely behind the ~~be maintained no more than 300 feet behind the~~ paving machine as practical. The roller~~-~~(s) for final compaction shall follow as closely behind the initial breakdown as practical~~-~~, such that a uniformly smooth surface is achieved. ~~As many passes as are possible shall be made with the compactors before the temperature of the asphalt-rubber concrete falls below 220 °F~~.

~~325.9.3.3~~ Compaction will be determined using a correlated thin lift n~~N~~uclear d~~D~~ensity g~~G~~auge and will be monitored for acceptability continuously during construction. The density of the compacted mixture shall not be less than 95% of the laboratory unit weight composed of the same mixture compacted by the 75 blow method of AASHTO T245 at the job mix design specified compaction temperature. The outside one foot of each pass of the pavement course or any unconfined edge will be excluded from testing. The Engineer may exclude areas from the compaction lot that are not accessible by normal compaction equipment. ~~Correlation for Compaction:~~

Nuclear Density Gauge Correlation - ~~On~~ During placement of the test strip or on the first day of paving~~lacement and compaction~~, the pavement surface shall be tested with a thin lift nuclear density gauge at a minimum of four locations. These same locations shall ~~immediately~~ then be cored, using a 4-inch diameter core barrel, and tested for bulk density (AASHTO T166-A, or T275) and a correlation value developed between the nuclear density gauge and the asphalt cores. ~~Remaining compaction of the asphalt rubber concrete shall be based upon the correlated thin lift nuclear density gauge.~~

~~The density of the compacted mixture shall not be less than 95% of the laboratory unit weight composed of the same mixture compacted by the 75 blow method of AASHTO T 245 at the job mix design specified compaction temperature.~~

Comment [pdf3]: I decided to use Marshall compaction, based on all the problems ADOT had with their 415 End Product using in-place air voids.

~~All edges shall be compacted by methods approved by the Engineer, while the mixture is still hot.~~

325.~~10~~9.3.~~3~~34 Compacting Miscellaneous Items and Surfaces: Asphalt-rubber concrete used in the construction of miscellaneous items and surfaces shall be compacted using compactors, hot-hand tampers, smoothing irons, mechanical vibrating hand tampers, or with other devices to the extent considered necessary by the Engineer.

325.~~10~~9.4 Engineering Analysis (EA): Within 10 working days after receiving notice that a lot or sublot of asphalt-rubber concrete is deficient and is found to fall within the "Removal or EA" band per Table(s) 325-~~5~~2, the contractor may submit a written proposal (Engineering Analysis) to accept the material in place at the applicable penalties along with possible remediation(s) listed in the "Removal or EA" category. An Engineering Analysis can

also be proposed for non-removal categories of "Corrective actions" when the contracting agency is not the owner (i.e. permits).

The Engineering Analysis shall contain an analysis of the anticipated performance of the asphalt-rubber concrete if left in place. The Engineering Analysis shall also detail the effect of any proposed corrective action to the material(s) in place as it relates to the in-place material's performance. The Engineering Analysis shall be performed by a professional engineer experienced in asphalt concrete testing and mix designs. If the lot or sublot is submitted for referee testing by the contractor, the ten working days allowed to prepare an engineering analysis will begin upon notification of referee test results.

When an Engineering Analysis recommends that a specific lot or sublot should not be removed, the Engineering Analysis will recommend that the following penalties (Table 325-~~6~~3) be paid when the contracting agency is the owner, for the specific criteria being reviewed by the EA.

TABLE 325-3~~6~~

ENGINEERING ANALYSIS PENALTIES for REMOVAL* LOTS/SUBLOTS LEFT IN-PLACE

Acceptance Criteria	Acceptance Limits	Penalty When Contracting Agency is the Owner ($/Ton)
Laboratory Air Voids (Measured at 75 blows)	Deviation from Target Greater Than ± 4.0%	$3.75

Within 15 working days, the Engineer will determine whether or not to accept the contractor's proposed Engineering Analysis.

325.11 REFEREE:

In the event the contractor elects to question the acceptance test results for laboratory air voids, the Contractor may make a written request for additional testing of the affected material. Any request for referee testing must describe the contractor's reasons for questioning the validity of the original acceptance results and must clearly describe which set of acceptance tests are in question. The Contractor will engage an independent laboratory who is accredited by AAP in all of the acceptance test methods. The independent laboratory shall be acceptable to the Engineer and shall perform a new set of acceptance tests as required by Section 325.~~10~~9.2.3 representing the area or set of tests in question. The results of these determinations will be binding on both the contractor and the agency. If the test results obtained by the independent laboratory result in elimination or reduction of the magnitude of the applicable penalty the contracting Agency will bear the cost of the referee testing. If the applicable penalty remains unchanged or increases, the cost for verification testing will be deducted from payments that were to be made to the contractor.

These tests will include Marshall unit weight, maximum theoretical unit weight, and laboratory air voids. Samples for referee testing shall come from representative samples obtained from the completed pavement, as directed by the Engineer.

The number of samples taken will be the same as specified in Section 325.~~10~~9.2.3. The independent laboratory shall compile the test results and transmit them to both the Engineer and the contractor. The independent laboratory shall include a report signed by an Engineer registered in the State of Arizona, who is experienced in asphalt concrete testing and mix design development. The signed report shall give an opinion that the material evaluated either does or does not comply with project specifications, shall clearly describe any deficiencies, and the results will be binding between all parties.

325.12 MEASUREMENT:

Asphalt-Rubber Concrete shall be measured by the ton, for the mixture actually used, which shall include the required quantities of mineral aggregates, filler material, asphalt-rubber binder and admixture.

Application of Lime Water shall be measured by the square yard. The measured area shall be the area of asphalt-rubber pavement to which the lime water is applied. The measured area shall only be counted one time regardless of the number of applications applied to the asphalt-rubber pavement section.

Shoulder adjustment to match the new pavement surface elevation shall not be measured. The cost of this work shall be included in the price paid for Asphalt-Rubber Concrete or other related pay items.

325.13 PAYMENT:

Payment for Asphalt Milling will be as specified in Section 317.

Payment for tack coat will be by the ton diluted, based on the rate of application, as directed by the Engineer.

Payment for Asphalt-Rubber Concrete will be at the contract unit price, complete in place.

Application of Lime Water as approved by the Engineer will be paid at the contract unit price.

Payment for frame and cover adjustments will be at the contract unit prices specified in the proposal.

SECTION 717

ASPHALT- RUBBER ASPHALT CONCRETE

717.1 DESCRIPTION:

The work under this section shall consist of furnishing, proportioning and mixing all the ingredients necessary to produce an asphalt-rubber material. Asphalt-Rubber Concrete Mixes may be used for low or high traffic conditions, as determined by the agency. Low traffic conditions are conditions where the asphalt mix will be subject to low volume and low weight vehicle usage. Examples of this condition are residential streets, most parking lots and residential minor collector streets. High traffic conditions are conditions where the asphalt mix will be subject to high volume and/or heavy weight vehicle usage as found on major collector, arterial and commercial streets. Street classifications (i.e. minor collector and major collector) shall be determined by the specifying agency.

717.2 MATERIALS:

717.2.1 Asphalt-Rubber Binder:

717.2.1.1 Asphalt Cement: Asphalt cement shall conform to the requirements of Section 711.

717.2.1.2Crumb Rubber: Crumb Rubber shall meet the gradation requirements as shown in Table 717-1 below when tested in accordance with Arizona Test Method 714.

TABLE 717-1	
GRADATION REQUIREMENTS~~Ts~~ OF CRUMB RUBBER	
Sieve	Percent Passing
Size	Type B
2.36 mm (#8)	
2.00 mm (#10)	100
1.18 mm (#16)	65 - 100
600 µm (#30)	20 - 100
300 µm (#50)	0 - 45
75 µm (#200)	0 - 5

The rubber shall have a specific gravity of 1.15 ± 0.05 and shall be free of wire or other contaminating materials, and shall contain not more than 0.5 percent fabric. Calcium carbonate, up to four percent by weight of the granulated rubber, may be added to prevent the particles from sticking together.

Certificates of Compliance conforming to Arizona State Department of Transportation Standard Specifications for Road and Bridge Construction Section 106.05 shall be submitted. In addition, the Certificates shall confirm that the rubber is a crumb rubber, derived from processing at ambient temperature, whole scrap tires or shredded tire materials; and the tires from which the crumb rubber is produced is taken from automobiles, trucks, or other equipment owned and operated in the United States. The Certificates shall also verify that the processing does not produce, as a waste product, casings or other round tire material that can hold water when stored or disposed of above the ground.

717.2.1.3 Asphalt-Rubber Proportions and Properties: Ground rubber in asphalt-rubber binder shall be a minimum of 18 percent by weight of total binder, and processed by ambient grinding.

Asphalt-rubber binder shall be Type 1 unless otherwise specified and conform to the requirements of Table 717-2 below:

TABLE 717-2	
PHYSICAL PROPERTIES OF ASPHALT RUBBER BINDER	
Property	Requirement

	Type I	Type 2	Type 3
Grade of base asphalt cement	**PG 64-16**	**PG 58-22**	**PG 52-28**
Rotational Viscosity*; 177°C (3510°F),; Pascal seconds (cps)	1.5-4.0 (1500-4000)	1.5-4.0 (1500-4000)	1.5-4.0 (1500-4000)
Penetration; 4°C (39°F), 200g, 60 sec. (ASTM D 5); dmm (in), min	10 (0.04)	15 (0.06)	25 (0.10)
Softening Point; (ASTM D 36); °C (°F), min.	57 (135)	54 (129)130	52 (126125)
Resilience;25°C (77°F) (ASTM D 3407); %,min	25	20	15

* The Viscometer used must be a hand held rotational viscometer, such as a Rion (formerly Haake) Model VT – 04, or an equivalent, using Rotor No. 1 . The rotor, while in the off position, shall be completely immersed in the binder at a temperature from 350 to 355 degrees F for a minimum heat equilibrium period of 60 seconds, and an average viscosity determined from three separate constant readings (± 0.5 pascal-seconds) taken within a 30 second time frame with the viscotester level during testing and turned off between readings. Continuous rotation of the rotor may cause thinning of the material immediately in contact with the rotor, resulting in erroneous results.

717.2.1.4 Asphalt-Rubber Binder Design: At least two weeks prior to the use of asphalt-rubber, the Contractor shall submit an asphalt-rubber binder design prepared by an ADOT approved laboratory. Such design shall meet the requirements specified herein. The design shall show the values obtained from the required tests, along with the following information: percent, grade and source of the asphalt cement used; and percent, gradation and source(s) of rubber used.

325.2.1 Asphalt-Rubber Binder: The asphalt-rubber binder shall conform to Section 717.

325.2.2717.2.2 Aggregate: Coarse and fine aggregates shall conform to the applicable requirements of this sectionTables 325-3 and 325-4 below. Coarse mineral aggregate shall consist of crushed gravel, crushed rock, or other approved inert material with similar characteristics, or a combination thereof, conforming to the requirements of these specifications.

Coarse aggregate is material retained above the Number 8 sieve and fine aggregate is material passing the Number 8 sieve. Aggregates shall be free of deleterious materials, clay balls, and adhering films or other material that prevent thorough coating with the asphalt cement. Mineral aggregate shall conform to the following requirements when tested in accordance with the applicable test methods.

Comment [DLC4]: Coarse & fine aggregates based on #8 or #4 sieve? Note difference in FFC vs. UV & SE.

Table 325-1717-3 **Mix Design Gradation Requirements**		
MIX DESIGN GRADATION REQUIREMENTS		
Overlay Thickness	**1" & 1- ½"**	**2"**
Sieve Size	**Percent Passing**	**Percent Passing**
1" (25 mm)	100	100
¾" (19 mm)	100	95-100
½" (12.5 mm)	95-100	78-92
⅜" (9.5 mm)	78-92	61-75
No. 4 (4.75 mm)	28-45	30-40
No. 8 (2.36 mm)	15-25	15-25
No. 30 (600 µm)	5-15	5-15
No. 200 (75 µm)	3.0-7.0	2.0-6.0

The combined aggregate properties shall conform to the requirements of Table 325-2 below.

Table 325-2
Coarse/Fine Aggregate Requirements

Table 717-4
COARSE/FINE AGGREGATE REQUIREMENTS

Characteristics	Test Method	Requirements
Fractured Faces, % (Plus No. 8 ~~mat'l~~)	~~Ariz~~ ARIZ 212	85, 1 or more
Uncompacted Voids, %	~~Ariz~~ ARIZ 247	45.0 (High Traffic Volume) 42.0 (Low Traffic Volume)
Sand Equivalent (Minus No. 4 ~~mat'l~~)	AASHTO T-176	65 minimum
Plasticity Index	AASHTO T89 & T-90	Non Plastic
L.A. Abrasion, % Loss	AASHTO T-96	9 max. @ 100 Rev. 40 max. @ 500 Rev.
Combined Bulk Specific Gravity	AI MS-2	2.35-2.85
Combined Water Absorption, %	AI MS-2	0-2.5

~~325~~717.2.3 Mineral Admixture: Mineral admixture used in asphalt-rubber concrete shall be dry hydrated lime conforming to the requirements of ASTM C 1097 or Portland cement conforming to ASTM C 150 for Type II, or ASTM C 595 for Type IP. The minimum mineral admixture content will be 1.000 percent, by weight of total aggregate.

~~325~~717.3 MIX DESIGN REQUIREMENT:

~~325~~717.3.1 General: The mix design for asphalt-rubber concrete shall be prepared by a laboratory that is accredited through the AASHTO Accreditation Program (AAP) in Hot Mix Asphalt Aggregates and Hot Mix Asphalt. The laboratory shall be under the direct supervision of a Civil Engineer, registered by the State of Arizona, and who is listed by ADOT as a "Qualified Asphalt Concrete Mix Design Engineer" within ADOT's latest list of approved laboratories. The latest list of approved laboratories is available on ADOT's web page http://www.azdot.gov/highways/materials/quality_assurance.asp. The date of the design shall not be older than two years from the date of submittal, unless supportive documentation is provided and approved by the Engineer.

The mix design method used shall be in accordance with the Marshall Mix procedure, 75 blows, as described in Arizona Test Method 832 "Marshall Mix Design Method for Asphalt-rubber Concrete (Asphalt Rubber)". Mix designs are subject to approval by the Engineer.

~~325~~717.3.2 Mix Design Criteria: The mix shall comply with the criteria in Table 325-~~3~~5 below.

Table ~~325-3~~717-5
~~Marshall Mix Design Criteria~~
MARSHALL MIX DESIGN CRITERIA

Criteria	Low Volume Traffic	High Volume Traffic
Asphalt Rubber Binder Content 1" and 1-1/2" Overlay Thickness 2" Overlay Thickness	 8.4% minimum N/A	 8.0% minimum 7.0% minimum
Mixture Air Voids, %	3.5-4.5	4.5-5.5
Voids in Mineral Aggregate, %	19.0 min	19.0 min
Tensile Strength Ratio, AASHTO T-283	65% minimum	65% minimum
Marshall Stability, pounds minimum	600	600
Marshall Flow, 0.01 inch minimum	16	16

The mix design report shall include the following elements as a minimum.

(1) The name and address of the testing organization and the person responsible for the mix design report.

(2) The mix plant identification and/or location, as well as the supplier or producer name.

(3) The traffic condition (low or high traffic) and lift thickness.

(4) A description of all products that are incorporated in the asphalt-rubber concrete along with the sources of all products, including asphalt binder, crumb rubber, mineral aggregate, and admixtures.

(5) The results of all testing, determinations, etc., such as: specific gravity and gradation, water absorption, sand equivalent, loss on abrasion, fractured coarse aggregate particles, Tensile Strength Ratio (AASHTO T-283), Marshall bulk density, stability and flow, asphalt absorption, percent air voids, voids in mineral aggregate. Historical abrasion values may be supplied on existing sources. The submittal should include a plot of the

Comment [DL5]: Consistent with 710

Comment [DL6]: Consistent with 710

Comment [DL7]: Some discussion about requiring 1.5% admix. Is this necessary considering there is now a TSR specification in the design process?

Comment [DL8]: Consistent with 710

Comment [DL9]: Consistent with 710

Comment [DL10]: Slightly wider mixture void range due to the nature of ARAC compared to conventional mix.

gradation on the Federal Highway Administration's 0.45 Power Gradation Chart and plots of the compaction curves.

(6) The laboratory mixing and compaction temperature ranges for the supplier and grade of asphalt binder used within the mix design.

(7) A specific recommendation for design asphalt-rubber binder content and any limiting conditions that may be associated with the use of the design, such as minimum percentages of crushed or washed fine aggregate.

(8) The supplier's product code, the laboratory Engineer's seal (signed and dated), and the date the design was completed.

(9) The Asphalt-Rubber Binder (ARB) blend design.

The mix design shall be submitted to the Agency or Engineer by the Contractor/Supplier for which it was developed as part of his project submittals. Once the mix design has been approved by the agency or Engineer, the Contractor and/or his supplier shall not change plants nor utilize additional mixing plants without prior approval of the Engineer. Any changes in the plant operation, the producer's pit, the asphalt binder, including modifiers in the asphalt binder, or any other item that will cause an adjustment in the mix, shall be justification for a new mix design to be submitted.

End of Section

Case 11-23

DATE: July 13, 2011

TO: MAG Specification and Details Committee Members

FROM: Jeff Benedict, Asphalt Working Group/AGC

RE: Section 321 - Asphalt Concrete Pavement

PURPOSE: Address compaction

REVISIONS:

a) Updated allowable self-directed target changes
b) Specify asphalt temperature for pavement fabric
c) Installed requirements if asphalt binder and or air voids do not meet target value
d) Changed sample frequency

SECTION 321

ASPHALT CONCRETE PAVEMENT

321.1 DESCRIPTION:

This section is to provide specifications for furnishing all materials, mixing at a plant, hauling and placing a mixture of aggregate materials, mineral admixture and asphalt binder to form a pavement course for placement upon a previously prepared base or sub base.

321.2 MATERIALS AND MANUFACTURE:

The materials shall conform to Section 710 for the type specified. The specific required mix type shall be called out in the contract documents or as directed by the Engineer.

321.3 WEATHER AND MOISTURE CONDITIONS:

Asphalt concrete shall be placed only when the surface is dry, and when the atmospheric temperature in the shade is 40 degrees F. (50 degrees F for Asphalt Concrete lift less than 2 inch thick) or above. No asphalt concrete shall be placed when the weather is foggy or rainy, or when the base or sub base on which the material is to be placed is unstable. Asphalt concrete shall be placed only when the Engineer determines that weather conditions are suitable.

321.4 APPLICATION OF TACK COAT:

A tack coat shall be applied to all existing and to each new course of asphalt concrete prior to the placing of a succeeding lift of asphalt concrete. The tack coat may be deleted when a succeeding layer of asphalt concrete is being applied over a freshly laid course that has been subjected to very little traffic when approved by the Engineer.

The application of the tack coat shall comply with Section 329. The grade of emulsified asphalt shall be SS-1 h or CSS-1 h as specified in Section 713.

The same material that is specified above for the tack coat shall be applied to the vertical surfaces of existing pavements, curbs, and gutters, against which asphalt concrete is to be placed.

The surface to be covered may require repair or patching as directed by the Engineer. This shall be addressed in the project specifications prior to the bidding of the project.

321.5 MIX DESIGN

The mix design shall be submitted to the Engineer at least five working days prior to the start of asphalt concrete production. Mix designs provided by the agency may be utilized on projects at the Engineer's discretion. The Engineer will review and approve the mix design to assure it contains all of the required information as outlined in Section 710.3.1. The target values for gradations, binder contents, and air voids will be established as the accepted Job Mix Formula (JMF) based upon the mix design. Mix designs not containing all of the information will be returned within five working days of receipt of all mix design information, for action and resubmission by the contractor.

Once the mix design has been approved by the agency and the mixing plant selected, the Contractor and/or his supplier shall not change plants nor utilize additional mixing plants without prior approval of the Engineer.

If the contractor elects to change its source of material, the contractor shall furnish the Engineer with a new mix design, which meets the requirements of Section 710, as amended by the Project Specifications.

The contractor may make self-directed target changes to the approved mix design within the limits shown below. Requests for self-directed target changes shall be made in writing and acknowledged by the Engineer prior to the start of production of a lot and will remain in effect until such time as any additional changes are implemented.

The self-directed target changes must meet the contract requirements for mix design criteria and gradation limits.

TABLE 321-1 ALLOWABLE SELF-DIRECTED TARGET CHANGES	
MEASURED CHARACTERISTICS	ALLOWABLE SELF-DIRECTED TARGET CHANGES
Gradation (Sieve Size)	
3/8 inch	± ~~4~~2% from mix design target value
No 8	± ~~4~~2% from mix design target value
No ~~30~~40	± ~~2~~1% from mix design target value
No 200	~~None~~±0.5% from mix design target value
Binder Content	± 0.2% from mix design target value
Effective Air Voids	None

Comment [JB1]: Matches ADOT requirements

The contractor may propose target changes, other than self-directed changes, to the approved mix design for the approval of the Engineer. The Engineer will determine if the proposed target change will result in mix production that meets the contract requirements for mix design criteria and gradation limits. The target changes will not be retroactive for the purpose of acceptance.

321.6 MIX PRODUCTION:

All materials shall be proportioned by weight in a hot mix asphalt plant in the proportions required by the mix design to provide a homogeneous and workable mass. Each hot mix asphalt plant shall be inspected in accordance with the provisions contained in the 'Hot Mix Asphalt Production Facilities' by the Arizona Rock Products Association and shall have a current inspection certificate. All measuring devices shall be calibrated at least annually by a technician licensed by the Arizona Bureau of Weights & Measures. Mixing plants shall conform to the requirements of AASHTO M 156, except as modified herein.

In drum mix plants the mineral admixture shall be added and thoroughly mixed with the mineral aggregate by means of a mechanical mixing device prior to the mineral aggregate and mineral admixture entering the dryer. The moisture content of the combined mineral aggregate shall be a minimum of three percent by weight of the aggregate during the mixing process.

For drum-mix plants, the mineral admixture shall be weighed across a weigh belt, or other approved alternative weighing system, with a weight totalizer prior to entry into the mechanical mixing device. The mechanical mixing device shall be a pugmill type mixer that is in good working condition. The rate of the aggregate feed shall not exceed the mixing device's capacity in ton per hour. The mixer shall be constructed to minimize the loss of mineral admixture and shall be located in the aggregate delivery system at a location where the mixed material can be readily inspected. The mixing device shall be capable of effective mixing in the full range of the asphalt concrete production rates.

The hot plant and equipment shall be constructed and operated to prevent loss of mineral admixture through the dust collection system of the plant.

A positive signal system shall be provided and utilized during production whereby the mixing shall automatically be stopped if the mineral admixture is not introduced into the mineral aggregate. The plant will not be permitted to operate unless the signal system is in good working condition.

The introduction of bituminous material shall be controlled by an automated system fully integrated with the controls or the mineral aggregate and mineral admixture. The production of the plant shall be controlled by the rate

required to obtain a uniform mixture of all components. Drying and heating shall be accomplished in such a manner as to preclude the mineral admixture from becoming coated with un-spent fuel. The completed asphalt concrete may be held in storage for up to 12 hours in insulated or heated silos, providing the minimum temperature noted herein for placement and compaction is met behind the placement device. If the Engineer determines that there is an excessive amount of heat, heat loss, drain down, segregation and/or oxidation of the mixture due to temporary storage, use of surge bins or storage bins will be discontinued.

The temperature of the asphalt concrete, with unmodified binders, upon discharge from the mixer shall not exceed 335 degrees F. The discharge temperature may be increased on the recommendation of the binder supplier, when approved by the Engineer. If the asphalt concrete is discharged from the mixer into a hopper, the hopper shall be constructed so that segregation of the asphalt concrete will be minimized.

321.7 TRANSPORTATION:

Petroleum distillates or other substances that will have a detrimental effect on the asphalt concrete shall not be used as a release agent.

The beds of all transportation units shall be clean and smooth to allow the free flow of material into the paving machine's hopper.

Tarpaulins shall be furnished on all trucks and used when weather condition warrant, or if directed by the Engineer.

321.8 PLACEMENT:

321.8.1 Placing: All courses of asphalt concrete shall be placed and finished by means of a self-propelled paving machine equipped with an automatically actuated control system, except under certain conditions or at locations where the Engineer deems the use of a self-propelled paving machine impracticable.

The control system shall control the elevation of the screed at each end by controlling the elevation of one end directly and the other end indirectly either through controlling the transverse slope or alternatively when directed, by controlling the elevation of each end independently.

The control system shall be capable of working with one of the following devices:

(A) Ski or non-contact device of not less than 30 feet in length, supported throughout its entire length
(B) Taut stringline or wire set to grade
(C) Short ski or sonar sensing units from curb control
(D) Joint matching shoe

Failure of the control system to function properly shall be cause for the suspension of asphalt concrete production. In order to achieve a continuous operation, the speed of the paving machine shall be coordinated with the hot mix plant and transport units.

If the asphalt concrete is dumped from the hauling vehicles directly into the paving machine, care shall be taken to avoid jarring the machine or moving it out of alignment. No vertical load shall be exerted on the paving machine by the truck.

If asphalt concrete is dumped upon the surface being paved and subsequently loaded in the paving machine, the loading equipment shall be self-supporting and shall not exert any vertical load on the paving machine. Substantially all of the asphalt concrete shall be picked up and loaded into the paving machine.

Self-propelled paving machines shall spread the mixture without segregation or tearing, true to line, grade and crown indicated on the Project plans. Pavers shall be equipped with hoppers and augers that will distribute the mixture uniformly in front of an adjustable floating screed. The raising of the hopper wings must be minimized and the paving machine will not be operated when in an empty condition.

Screeds shall include any strike-off device operated by tamping or vibrating action which is effective, without tearing, shoving or gouging the mixture and which produces a course with a uniform texture and density for the full width being paved. Screeds shall be adjustable as to height and crown and shall be equipped with a controlled heating device for use when required. In the case of the screed, auger extensions and vibrators shall be installed wherever the screed is extended more than one (1) foot beyond the end of the base auger or auger extension. However, when placing material against an extremely uneven curb or edge over a short distance, the Engineer may waive the auger extensions and vibrators.

At any place not accessible to the roller, the mixture shall be thoroughly compacted with tampers to provide a uniform and smooth layer over the entire area compacted in this manner.

321.8.2 Joints: Transverse joints, before a surface course is placed in contact with a cold transverse construction joint, the cold existing asphalt concrete shall be trimmed to a vertical face for its full depth and exposing a fresh face. After placement and finishing the new asphalt concrete, both sides of the joint shall be dense and the joint shall be smooth and tight. The surface in the area of the joint shall not deviate more than ¼ inch from a 12-foot straightedge, when tested with the straightedge placed across the joint, parallel to the centerline.

Longitudinal Joints of each course shall be staggered a minimum of 6 inches with relation to the longitudinal joint of the immediate underlying course cold transverse construction joint, the cold existing asphalt concrete shall be trimmed to a vertical face for its full depth and exposing a fresh face. The fresh face shall be tacked prior to placement of the adjacent course. After placement and finishing the new asphalt concrete, both sides of the joint shall be dense and the joint shall be smooth and tight. The surface in the area of the joint shall not deviate more than ¼ inch from a 12-foot straightedge, when tested with the straightedge placed across the joint, parallel to the centerline. The joint will be tack coated if required by the Engineer.

321.8.3 Asphalt Leveling Course: A leveling course shall be used when specified, or as directed in writing by the Engineer, to bring existing pavement to a uniform grade prior to placing an overlay or other course. If a leveling course is being applied on an Asphalt surface, a tack coat shall be applied. The compaction requirements contained in Section 321.10 do not apply to leveling courses.

321.8.4 Compaction; Asphalt Base Course and Surface Course: It is the contractor's responsibility to perform any desired Quality Control monitoring and/or testing during compaction operations to achieve the required compaction. ~~Asphalt~~The temperature of the asphalt concrete immediately behind the laydown machine shall ~~be referenced to~~ meet the minimum requirements of Table 321-2. ~~3. The~~ 2. A probe type ~~thermocouple~~electronic thermometer ~~shall have~~with a current calibration sticker attached~~.~~ will be used to measure the temperature of the asphalt concrete mixture. When measuring the temperature of the mat, the probe shall be inserted at mid-depth and as horizontal as possible to the mat.

TABLE 321-2

MINIMUM ASPHALT CONCRETE PLACEMENT TEMPERATURE

Base [1] Temp (°F)	Mat Thickness (inches)					
	½	¾	1	1 ½	2	3 and greater
40 – 50	---	---	310	300	285	275
50 – 60	---	310	300	295	280	270
60 – 70	310	300	290	285	275	265
70 – 80	300	290	285	280	270	265
80 – 90	290	280	270	270	265	260

±90	280	275	265	265	260	255

(1) Base on which mix is to be placed

Asphalt compaction equipment shall be of sufficient size and weight to accomplish the required compaction. All compaction equipment shall be operated and maintained in accordance with the manufacturer's recommendations and the project requirements. During the rolling operation, the speed of the roller shall not exceed 3 miles per hour, unless otherwise approved by the Engineer.

Pneumatic tired compactors shall be equipped with skirt-type devices mounted around the tires so that the temperature of the tires will be maintained during the compaction process.

The Engineer will determine the acceptability of the pavement compaction in accordance with Section 321.10.

321.8.5 Smoothness: The completed surfacing shall be thoroughly compacted, smooth and true to grade and cross-section and free from ruts, humps, depressions or irregularities. An acceptable surface shall not vary more than one-fourth (¼) inch from the lower edge of a 12-foot straightedge when the straightedge is placed parallel to the centerline of the roadway.

321.8.6 Asphalt Concrete Overlay: Asphalt concrete overlay consists of the placing and compacting plant mix asphalt concrete over existing asphalt concrete paving. The thickness of the overlay shall be as shown on the plans or as specified in the special provisions. Preliminary preparation of existing surfaces will be required except when accomplished by the Contracting Agency, and it is so stipulated in the special provisions. With the exception of those which have been preheated and remixed only, existing surfaces shall receive a tack coat.

Asphalt concrete mix aggregate gradation and percentage of asphalt binder shall be in accordance with Section 710 using a 1/2-inch Marshall-Low Traffic asphalt concrete mix designation for overlay more than one and one-half inch in thickness and a 3/8-inch Marshall-Low Traffic asphalt concrete mix designation for overlay one and one-half inch or less in thickness, unless otherwise shown or specified in the special provisions.

Except when they have been preheated and remixed, pavement surfaces shall be prepared as follows:

(a) Before placing asphalt concrete overlay, severely raveled areas or cracked areas that are depressed more than 3/4-inch from the adjoining pavement shall be cut out and patched at least 48 hours prior to the resurfacing operation. Over-asphalted areas or rough high spots shall be either milled or cut out and patched. Large shrinkage cracks shall be filled with asphalt sealing compound acceptable to the Engineer. The entire surface shall be cleaned with a power broom. Raveled areas that do not require removing shall be cleaned by hand brooming. The above are incidental, and the cost thereof shall be included in the bid items.

Revised 2010 2009 1999

(b) Before placing asphalt concrete overlay, milling shall be done as shown on the plans or specified in the special provisions and shall be in accordance with Section 317.

(c) After surfaces have been prepared to the satisfaction of the Engineer, they shall receive a tack coat per Section 321.4. Traffic will not be permitted to travel over surfaces which have received a tack coat. When the overlay is to extend onto the concrete gutter, the gutter shall be ~~throughly~~thoroughly cleaned of loose dust and cement particles and shall be tack coated.

Asphalt concrete overlay shall be placed as specified in Section 321.8.1 and compacted as specified in Section 321.8.4. The surface smoothness shall meet the tolerances specified in Section 321.8.5.

Manholes shall be built up and the frames set flush with the finished surface of the new paving, and tops of value boxes, clean-outs and other existing structures shall be adjusted to finish grade. In the event the base course and original paving have been removed or disturbed in order to build up the manhole, they shall be replaced with

approved materials which shall be ~~throughly~~thoroughly compacted. The asphalt concrete around the manhole frame shall be completed and made flush with the adjacent overlay.

321.8.7 Pavement Fabric Interlayer: Pavement fabric interlayer shall be used only when specified on the plans or in the specifications.

Pavement fabric interlayer shall be in accordance with Table 796-1 and be the class designated on the plans or in the specifications.

Asphalt binder coat used to bond the fabric to the pavement shall be paving asphalt PG 70-10 asphalt cement conforming to the requirements of Section 711. The application and distributing equipment for the asphalt binder shall conform to the requirements of Section 330. The asphalt binder coat shall be uniformly spray applied to the prepared pavement surface at the rate of 0.20 gallons per square yard for Class B fabric or at the rate of 0.25 gallons per square yard for Class A fabric. Some underlying surfaces may require a higher or lower application rate. A test strip may be necessary to determine the proper application rate. The width of liquid asphalt cement application shall be the fabric width, plus six inches.

Neither the asphalt binder coat or fabric interlayer shall be placed when weather conditions, in the opinion of the Engineer, are not suitable. The asphalt binder and fabric interlayer shall only be placed when the pavement is dry, the ambient air temperature is 50 degrees F and rising, and pavement temperature is 40 degrees F and rising.

Equipment for placing the fabric shall be mechanized and capable of handling full rolls of fabric. The equipment shall be able to lay the fabric smoothly to maximize pavement contact and remove air bubbles. Stiff bristle brooms shall be used to smooth the fabric. The equipment used to place the fabric shall be in good working order and is subject to approval by the Engineer.

Pavement fabric interlayer shall not be placed if the in-place binder is hotter than 325 degrees F or has cooled to 180 degrees F or below (as determined by non-contact thermometer).

Pavement fabric interlayer shall be placed onto the asphaltic binder with the heat bonded side up with a minimum amount of wrinkling or folding. Remaining wrinkles or folds 1-inch and larger shall be removed or slit and shingle-lapped in the direction of paving. Burning or torching of wrinkles is not allowed. Fabric shall overlap three to six inches to insure full closure of the joint. Transverse joints shall be shingle-lapped in the direction of paving to prevent edge pickup by the paver. A second application of hand-placed asphalt binder may be required at laps and repairs as determined by the Engineer to ensure proper binding of the narrow double fabric layer.

All areas where fabric has been placed shall be paved with asphaltic concrete during the same workshift. Placement of the asphaltic concrete shall closely follow fabric lay down. The temperature of the asphaltic concrete immediately behind the laydown machine shall not exceed 325 degrees F. In the event that the asphalt binder coat bleeds through the fabric causing construction problems before the overlay is placed, the affected areas shall be sanded with a sand blotter in compliance with Section 333. Excess sand shall be removed before beginning the paving operation. In the event of rainfall prior to the placement of the asphaltic concrete, the fabric shall be allowed to dry before the asphalt concrete is placed.

Turning of the paving machine or of other vehicles on the fabric shall be gradual and kept to a minimum to avoid damage to the fabric. Should equipment tires stick to the fabric during pavement operations, small quantities of paving asphalt concrete shall be broadcast on the fabric to prevent pick-up. Decrease of binder rate in order to minimize pick-up on tires is not allowed.

~~TABLE 321.2~~

~~MINIMUM ASPHALT CONCRETE PLACEMENT TEMPERATURE~~						
~~Base (1) Temp (°F)~~	~~Mat Thickness (inches)~~					
	~~½~~	~~¾~~	~~1~~	~~1½~~	~~2~~	~~3 and greater~~
~~40 – 50~~	~~---~~	~~---~~	~~310~~	~~300~~	~~285~~	~~275~~
~~50 – 60~~	~~---~~	~~310~~	~~300~~	~~295~~	~~280~~	~~270~~
~~60 – 70~~	~~310~~	~~300~~	~~290~~	~~285~~	~~275~~	~~265~~
~~70 – 80~~	~~300~~	~~290~~	~~285~~	~~280~~	~~270~~	~~265~~
~~80 – 90~~	~~290~~	~~280~~	~~270~~	~~270~~	~~265~~	~~260~~
~~+90~~	~~280~~	~~275~~	~~265~~	~~265~~	~~260~~	~~255~~

~~(1) Base on which mix is to be placed~~

321.9 QUALITY CONTROL:

It is the contractor's responsibility to perform Quality Control monitoring and/or testing during asphalt concrete production to achieve the required compaction and to perform Quality Control monitoring and/ or testing during asphalt concrete production to achieve the required mix properties. The Engineer may obtain samples of any portion of any material at any point of the operations for his own use. Also, the Engineer may order the use of any drying, proportioning and mixing equipment or the handling of any material discontinued which, in his/her opinion, fails to produce a satisfactory mixture.

The asphalt concrete produced shall conform to the ~~properties~~requirements of the ~~mix design.~~production tolerances established in section 321.10. When the asphalt concrete does not conform to the ~~approved mix design properties~~production tolerances, it shall be reported to the Engineer, and corrective quality control measures shall be implemented, or production shall cease immediately at no additional cost to the contracting Agency or Engineer.

321.10 ACCEPTANCE:

321.10.1 Acceptance Criteria: Unless otherwise specified, asphalt concrete will be divided into lots for the purpose of acceptance. A lot shall be considered to be one day's production. When the quantity of asphalt concrete placed in a day exceeds 500 tons but is less than 2000 tons, the lot shall be divided into 500 ton sublots or fraction thereof. Where the quantity of asphalt concrete placed in a day exceeds 2000 tons, the day's production will be divided into four (4) approximately equal sublots. A minimum of one sample will be obtained from each lot. Tests used to determine acceptance will be performed by the Engineer or a laboratory employed by the Engineer. In either case the laboratory shall be accredited by the AASHTO Accreditation Program (AAP), for the tests being performed. The acceptance laboratory will take representative samples of the asphalt concrete from each sublot to allow for gradation, binder content, air voids, pavement thickness and compaction of base and surface course. Each sublot will be accepted based upon the test data from the sample(s) from that sublot. All acceptance samples shall be taken using random locations or times designated by the Engineer in accordance with ASTM D 3665.

321.10.2 Gradation, Binder Content and Air Voids: The acceptance laboratory will take a sample of the asphalt concrete in accordance with the requirements of Section 2 or 4 of Arizona Test Methods 104 or AASHTO T168 from each sublot. The minimum weight of the sample shall be 45 pounds. Asphalt binder content and gradation shall be determined in accordance with AASHTO T308 using the ignition furnace for each sublot. The acceptance laboratory is responsible for obtaining the necessary materials and performing an ignition furnace calibration as outlined in AASHTO T308 for each asphalt concrete mixture utilized on the project. The correction factor used for each test shall be clearly indicated on the report. The bulk density for Marshall Mix designs shall be tested in accordance with AASHTO T 245. The bulk density for Gyratory mix designs shall be tested in accordance with AASHTO T312. The maximum theoretical density shall be tested in accordance with the requirements of AASHTO T209~~.~~ including fan drying per AASHTO T 209 Section 11. Effective voids determined on the laboratory compacted specimens will be determined at a minimum of once per lot in accordance with the requirements of AASHTO T269. Should the testing for effective air voids not meet the "Full Payment" or "No Corrective Action" requirements of Table 321-5, additional testing for laboratory air voids on the remaining sublots will be performed as necessary to determine the extent of the deficiency. Acceptance testing results will be furnished to the contractor within five working days of receipt of samples by the acceptance laboratory. **The acceptance laboratory shall ensure that the supplier is provided copies of all reports of acceptance testing performed on asphalt concrete samples taken to determine compliance with specifications.**

~~The allowable deviations for acceptable production of each measured characteristic from the values established in the JMF for each sublot are as follows:~~

During production, the allowable deviations from the mix design gradation targets are listed in the tables below. The allowable production tolerances may fall outside of the mix design gradation bands.:

TABLE 321-~~3~~3A
GRADATION ACCEPTANCE LIMITS FOR MARSHALL MIXES

~~ACCEPTANCE LIMITS FOR ASPHALT CONCRETE~~Sieve Size	⅜ inch Mix	½ inch Mix	¾ inch Mix	Base Mix
~~Maximum Aggregate Size~~1 inch	~~100% passing~~---	---	---	±7%
~~Nominal Maximum Aggregate Size~~¾ inch	~~±7%~~---	---	±7%	±6%
½ inch	---	±7%	---	---
⅜ inch	±7%	±6%	±6%	±6%
~~No. 8 Sieve to the Nominal Maximum Aggregate Size~~No. 8	±6%	±6%	±6%	±6%
No. ~~100 and No. 30 Sieves~~40	±4%	±4%	±4%	±4%
No. 200 ~~Sieve~~	±2%	±2%	±2%	±2%

Inserted Cells
Inserted Cells
Inserted Cells
Inserted Cells
Inserted Cells
Inserted Cells
Inserted Cells

TABLE 321-3B
GRADATION ACCEPTANCE LIMITS FOR GYRATORY MIXES

Sieve Size	⅜ inch Mix	½ inch Mix	¾ inch Mix
¾ inch	---	---	±7%
½ inch	---	±7%	±6%

⅜ inch	±7%	±6%	---
No. 8	±6%	±6%	±6%
No. 40	±4%	±4%	±4%
No. 200	±2%	±2%	±2%

If the results from a single acceptance sample fall outside of the acceptance limits in Table 321-3 a second sample shall be taken and if the second acceptance sample is also outside of the acceptance limits in Table 321-3 the Contractor shall cease production of asphalt concrete. Production shall not begin again until calibration test results verify that adjustments made to materials or proportions yield a gradation that falls within acceptance limits in Table 321-3.

~~The asphalt binder content shall be considered acceptable if it is within ± 0.40% of the mix design target value.~~
If the asphalt binder content is within ± 0.40% of the mix design target value**, the asphalt concrete will be paid for at the contract unit price. If the asphalt binder content is greater than ± 0.40% from the mix design target value, the deficient area will be evaluated within the sublot by coring at maximum intervals of 100 feet from the deficient sample. The asphalt content of the original deficient sample will be averaged with the asphalt binder content of the cores taken for re-evaluation to determine compliance with the acceptance requirements. If the resulting average of the asphalt binder content is greater than ± 0.40% from the mix design target value, then Table 321-4 shall apply to the sublot. Additional cores may be required to define the limits of the deficient area, and shall not be used for re-evaluating acceptance.**

TABLE 321-4		
ASPHALT BINDER CONTENT ~~CORRECTIVE ACTION FOR DEVIATIONS~~ACCEPTANCE AND PENALTIES		
Deviation from that permitted	When the contracting agency is the owner: Payment Reduction ($ per ton of asphalt concrete)	When the contracting agency is not the owner (i.e. permits): Corrective Action
Over 0.0 to 0.1% points	$2.00	EA (see 321.10.6)
Over 0.1 to 0.2% points	$6.00	EA (see 321.10.6)
Over 0.2% points	Removal* or EA per 321.10.6	Removal* or EA per 321.10.6

~~Note: Removal* refers to Section 321-10.6~~

If the laboratory air voids fall within a range of 2.8% to 6.2%, the asphalt concrete will be paid for at the contract unit price. If the laboratory air voids are outside of this range, the deficient area will be evaluated within the sublot by coring at maximum intervals of 100 feet from the deficient sample. The laboratory air voids of the original deficient sample will be averaged with the laboratory air voids obtained from each of the cores taken for re-evaluation to determine compliance with the acceptance requirements. If the resulting average of the laboratory air voids is outside the indicated range, then Table 321-5 shall apply to the sublot. Additional cores may be required to define the limits of the deficient area, and shall not be used for re-evaluating acceptance.

TABLE 321-5		
LABORATORY VOIDS ACCEPTANCE AND PENALTIES		
Laboratory Air Voids (Measured at N_{des} or 75 blows as applicable)	When the contracting agency is the owner: Payment Reduction ($ per ton of asphalt concrete)	When the contracting agency is not the owner (i.e. permits): Corrective Action

Less than 1.5%	Removal* or EA per 321.10.6	Removal* or EA per 321.10.6
1.5-2.0%	$2.50	EA (see 321.10.6)
2.1-2.7%	$1.00	EA (see 321.10.6)
2.8-6.2%	Full Payment	No corrective action
6.3-6.9%	$1.00	EA (see 321.10.6)
7.0-8.0%	$2.50	EA (see 321.10.6)
Greater than 8.0%	Removal* or EA per 321.10.6	Removal* or EA per 321.10.6

~~Note: Removal* refers to Section 321-10.6~~

Revised 2011 1999

If an agency or Engineer is purchasing asphalt concrete directly from a commercial material supplier, the agency or Engineer will use Section 321.10 and specifically Tables 321-3, 321-4 and 321-5 from Section 321.10 when determining the acceptance of the asphalt concrete with the material supplier.

321.10.3 Surface Testing: If directed by the Engineer surface drainage test shall be performed. The completed surfacing shall be thoroughly compacted, smooth and true to grade and cross-section and free from ruts, humps, depressions or irregularities. An acceptable surface shall not vary more than 1/4 inch from the lower edge of a 12-foot straightedge when the straightedge is placed parallel to the centerline of the roadway. The straightedge shall be furnished by the contractor and shall be acceptable to the Engineer.

All streets shall be water tested for drainage in the presence of the Engineer or designated representative before final acceptance. Any areas not draining properly shall be corrected to the Engineer's satisfaction at the Contractor's expense. Water for this testing shall be provided and paid for by the Contractor.

When deviations in excess of the above tolerance are found, humps or depressions shall be corrected to meet the specified tolerance, or shall be cut out along neat straight lines and replaced with fresh hot mixture and thoroughly compacted to conform with and bond to the surrounding area. Materials and work necessary to correct such deviations shall be at no additional cost to the Contracting Agency.

321.10.4 Asphalt Pavement Thickness: Asphalt Pavement thickness will be determined from cores secured from each sublot for this purpose. Such cores will be taken and measured by the Asphalt Concrete Coring Method. This method can be found at in Section 321.14. Each core location will be patched by the party responsible for the testing.

If the pavement thickness is deficient from the target thickness by 0.25 inches or less, it will be paid for at the contract unit price. If the pavement thickness deficiency is greater than 0.25 inches and the contracting agency is not the owner (i.e. permits) the following steps will apply:

(1) If the thickness deficiency of the pavement exceeds 0.25 inch, the limits of the deficient area will be ~~isolated~~evaluated by coring at maximum intervals of 100 feet from the deficient core. The thicknesses of the original deficient core will be averaged with the thicknesses of the cores taken from 100 feet on each side of it to determine compliance with the acceptance requirements**. If the resulting average thickness deficiency is greater than 0.25 inch, then Table 321-6 shall apply to the sublot. Additional cores may be required to define the limits of the deficient area, and shall not be used for re-evaluating acceptance.**

(2) If the pavement thickness from step one above deviates from the target thickness by more than 0.25 inch but not more than 0.50 inch, corrective action will be required. This corrective action will consist of application of a Type II slurry seal coat in accordance to Section 715. The Contractor may present an engineering analysis outlining other proposed remedial measures for the consideration of the Engineer. The Engineer will review the engineering analysis and decide within 30 working days whether to accept the proposed remedial measures.

(3) If the pavement thickness from step one above deviates from the target thickness by more than 0.50 inch, corrective action will be required. The deficient area will be overlaid with no less than 1 inch thick lift, for the full width of the pavement to meet or exceed the designed thickness, with the appropriate end and edge milling, with a mixture approved by the Engineer. The Contractor may present an engineering analysis outlining other proposed remedial measures for the Engineer's consideration. The Engineer will review the engineering analysis and decide within 10 working days whether to accept the proposed remedial measures. If the Engineer chooses to reject the engineering analysis, the indicated overlay will be constructed by the Contractor at no additional cost to the Owner.

If the pavement thickness deficiency is greater than 0.25 inches and the contracting agency is the owner, Table 321-6 will apply.

TABLE 321-6	
ASPHALT PAVEMENT THICKNESS PAYMENT REDUCTION For Thickness Deficiency of More Than 0.25 inches and less than 0.50 inches	
Specified ~~Mat~~Pavement Thickness	**Reduction in Payment or Corrective Action**
Less than 1.5 inches	50%
1.50 inches to 1.99 inches	33%
2.00 inches to 2.49 inches	25%
2.50 inches to 2.99 inches	20%
3.00 inches and over	17%

321.10.5 Density:

321.10.5.1 Pavement Thickness 1-1/2 Inches or Less in Nominal Thickness:

Compaction shall consist of a "Rolling Method Procedure" using an established sequence of coverage with specified types of compactors. A pass shall be defined as one movement of a compactor in either direction. Coverage shall be the number of passes as are necessary to cover the entire width being paved.

The rolling sequence, the type of compactor to be used, and the number of coverages required shall be as follows:

Rolling Sequence	Type of Compactor		No. of Coverages	
	Option No. 1	Option No. 2	Option No.1	Option No. 2
Initial	Static Steel	Vibrating Steel	1	1
Intermediate	Pneumatic Tired	Vibrating Steel	4	2- 4*
Finish	Static Steel	Static Steel	1-3	1-3
* Based on the roller pattern which exhibits the best performance.				

The **Contractor** shall select the option for compaction and, when pneumatic-tired compactors are used, will designate the tire pressure. Steel wheel compactors shall not be used in the vibratory mode for courses of one inch or less in thickness nor when the temperature of the asphaltic concrete falls below 180 degrees F. Initial and intermediate compaction shall be accomplished before the temperature of the asphaltic concrete falls below 200 degrees F.

Compaction will be deemed to be acceptable on the condition that the asphaltic concrete is compacted using the type of compactors specified, ballasted and operated as specified, and with the number of coverages of the compactors as specified.

321.10.5.2 Pavement Thickness Greater than 1-1/2 Inches in Nominal Thickness:

Achieving the required compaction is the responsibility of the contractor. The number and types of rollers is the contractor's responsibility and shall be sufficient to meet these requirements.

In-place air voids shall be determined in accordance with AASHTO T269 utilizing cores taken from the finished pavement. The maximum theoretical density used in the determination of in-place air voids will be the average value from the acceptance samples determined for the Lot as outlined in 321.10.1.

The Engineer will designate ~~two~~ one random test location~~s~~ for each sublot and the acceptance laboratory will obtain ~~two cores~~one core from ~~each~~ that location. ~~The two cores will be averaged for acceptance.~~ The outside one foot of each pass of the pavement course or any unconfined edge will be excluded from testing. The Engineer may exclude areas from the compaction lot that are not accessible by normal compaction equipment.

The Contractor will provide the traffic control to facilitate any coring operations necessary for compaction acceptance.

Cores will be taken per the Asphalt Concrete Coring Method. This method can be found in Section 321.14. ~~The acceptance laboratory will furnish test~~Acceptance testing results will be furnished to the contractor within ~~three~~five working days of receipt of ~~the cores~~ samples by the acceptance laboratory.

If the pavement density has in-place voids of 8.0% or less, the asphalt concrete will be paid for at the contract unit price. If the pavement density has in-place voids greater than 8.0%, the ~~limits of the~~ deficient area will be ~~isolated~~evaluated within the sublot by coring at maximum intervals of 100 feet from the deficient core~~.~~(s) **If both cores in a sublot are deficient, 3 to 4 additional cores may be necessary to re-evaluate acceptance.** The in-place voids of all the original ~~deficient~~ core**(s),** whether deficient or acceptable, will be averaged with the in-place voids of the cores taken ~~from 100 feet on each side of it~~ **for re-evaluation** to determine compliance with the acceptance requirements. If the average of the in-place voids is greater than 8.0% then Table 321-~~6~~7 shall apply to the sublot. **Additional cores may be required to define the limits of the deficient area, and shall not be used for re-evaluating acceptance.**

TABLE 321-7		
PAVEMENT DENSITY PENALTIES		
Limits of In-place Air Voids ~~Less~~for lift thicknesses greater than 1.5 inches	When the contracting agency is the owner: Payment Reduction ($ per ton of asphalt concrete)	When the contracting agency is not the owner (i.e. permits): Corrective Action
8.1% to 9.0%	$4.00	EA
9.1% to 10.0%	$6.00	EA and Type II Surry Seal
10.1% to 11.0%	Removal* or EA per 321.10.6	Removal* or EA per 321.10.6

Greater than 11.0%	Removal	Removal

Notes: Removal refers to Section 321-.10.6. The Contractor shall remove and replace the entire sublot that is deficient. Removal for In-place Air Voids greater than 11.0% is not eligible for Section 321.10.6.

321.10.6 Engineering Analysis (EA): Within 10 working days after receiving notice that a lot or sublot of asphalt concrete is deficient ~~for~~ and is found to fall within the "Removal~~" by the Engineer,~~ or EA" band per Table(s) 321-6, and 321-8 the contractor may submit a written proposal (Engineering Analysis) to accept the material in place at the applicable penalties along with possible remediation(s) listed in the "Removal or EA" category. Engineering Analysis can also be proposed for non-removal categories of "Corrective actions" when the contracting agency is not the owner (i.e. permits).

The Engineering Analysis shall contain an analysis of the anticipated performance of the asphalt concrete if left in place. The Engineering Analysis shall also detail the effect of any proposed corrective action ~~on~~to the material(s) in place as it relates to the in-place material's performance. The Engineering Analysis shall be performed by a professional engineer experienced in asphalt concrete testing and mix designs. If the lot or sublot is submitted for referee testing by the contractor, the ten working days allowed to prepare an engineering ~~analysis~~ will begin upon notification of referee test results.

When an Engineering Analysis recommends that a specific lot or sublot should not be removed, the Engineering Analysis will recommend that the following penalties (Table 321-8) be paid when the contracting agency is the owner, for the specific criteria being reviewed by the EA.

TABLE 321-8

ENGINEERING ANALYSIS PENALTIES for REMOVAL* LOTS/SUBLOTS LEFT IN-PLACE

Acceptance Criteria	Acceptance Limits	Penalty When Contracting Agency is the Owner ($/Ton)
Asphalt Binder Content	Over 0.2% points from that Permitted	$9.00
Laboratory Air Voids (Measured at N_{des} or 75 blows as applicable)	Less than 1.5% or Greater Than 8.0%	$3.75
Limits of In-place Air Voids	10.1% to 11.0%	$9.00

Within 15 working days, the Engineer will determine whether or not to accept the contractor's proposed Engineering Analysis.

321.11 REFEREE:

In the event the contractor elects to question the acceptance test results for either asphalt binder content, laboratory air voids, density or a combination thereof for a sublot, the Contractor may make a written request for additional testing of that sublot. Any request for referee testing must describe the contractor's reasons for questioning the validity of the original acceptance results and must clearly describe which set of acceptance tests are in question. The Contractor will engage an independent laboratory ~~(at the Contractors own expense) who Is~~who is accredited by AAP in all of the acceptance ~~tests.~~test methods. The independent laboratory shall be acceptable to the Engineer and shall perform a ~~complete~~ new set of acceptance tests ~~(~~as required by Section 321.10 representing the area or set of tests in question~~)~~. The results of these determinations will be binding on both the contractor and the agency. If the test results obtained by the independent laboratory result in elimination or reduction of the magnitude of the applicable penalty the contracting Agency will bear the cost of the referee testing. If the applicable penalty remains unchanged or increases, the cost for verification testing will be deducted from payments that were to be made to the contractor.

These tests ~~shall~~may include asphalt binder content, aggregate gradation, Marshall or Gyratory unit weight, ~~and~~ maximum theoretical unit weight~~.~~, laboratory air voids and in-place air voids (compaction). Samples for referee testing shall come from representative samples obtained from the completed pavement, as directed by the Engineer.

The number of samples taken will be the same as specified in Section 321.10. The independent laboratory shall compile the test results and transmit them to both the Engineer and the ~~Contractor.~~contractor. The independent laboratory shall include a ~~letter~~report signed by an Engineer registered in the State of Arizona, who is experienced in asphalt concrete testing and mix ~~designs.~~design development. The signed ~~letter~~report shall give an opinion that the material evaluated either does or does not comply with project specifications, ~~and~~ shall clearly describe any deficiencies, and the results will be binding between all parties.

321.12 MEASUREMENT:

Asphalt concrete pavement will be measured by the ton, or by the square yard, for the mixture actually used as allowed above, which shall include the required quantities of mineral aggregates, asphalt binder, and mineral admixture. Measurement shall include any tonnage used to construct intersections, roadways, streets, or other miscellaneous surfaces indicated on the plans or as directed by the Engineer.

321.13 PAYMENT:

The asphalt concrete measured as provided above will be paid for at the contract price per ton or square yard, as adjusted per Section 321.10, which price shall be full compensation for the item complete, as herein described and specified.

Payment for tack coat will be by the ton diluted, based on the rate of application, as directed by the Engineer.

No payment will be made for any overrun in quantity of asphalt concrete in excess of 10 percent based on actual field measurement of area covered, design thickness, and the mix design unit weight. The calculations and payment for overrun will be by individual pay item. To compensate or adjust for a thickness deficiency in an underlying asphalt concrete course, the Engineer may authorize a quantity increase in excess of 10 percent for a subsequent asphalt concrete course. In such cases, the quantity in excess of 10 percent will be paid for at the lowest unit price.

Except as otherwise specified in the special provisions, no separate payment will be made for work necessary to construct miscellaneous items or surfaces of asphalt concrete.

321.14 ASPHALT CORE METHOD: Core Drilling of Hot Mix Asphalt (HMA) for Specimens of 4" or 6" diameter

321.14.1 Scope: This method is to establish a consistent method of the use of a diamond bit core to recover specimens of 4 or 6 inch diameter for laboratory analysis and testing. The method will require the use of: water, ice (bagged or other suitable type), dry ice, and a water-soap solution to be utilized when coring asphalt rubber concrete. Individuals doing the specimen recovery should be observing all safety regulations from the equipment manufacturer as well as the required job site safety requirements for actions, and required personal protective equipment.

321.14.2 Core Drilling Device: The core drilling device will be powered by an electrical motor, or by an acceptable gasoline engine. Either device used shall be capable of applying enough effective rotational velocity to secure a drilled specimen. The specimen shall be cored perpendicularly to the surface of pavement, and that the

sides of the core are cut in a manner to minimize sample distortion or damage. The machinery utilized for the procedure shall be on a mounted base, have a geared column and carriage that will permit the application of variable pressure to the core head and carriage throughout the entire drilling operation. The carriage and column apparatus shall be securely attached to the base of the apparatus; and the base will be secured with a mechanical fastener or held in place by the body weight of the operator. The core drilling apparatus shall be equipped with a water spindle to allow water to be introduced inside of the drill stem while operating. The cutting edge of the core drill bit shall be of

hardened steel or other suitable material with embedded diamond chips in the cutting surface. The core barrel shall be of sufficient diameter to secure a specimen that is a minimum of four or six inches or whichever is prescribed for necessary testing. The core barrel shall not be missing more than one of the teeth used for cutting; if so it shall be discarded and another barrel shall be used. The core barrel shall also be a minimum of two inches longer than the anticipated depth of pavement in accordance with project paving plans.

321.14.3 Accessory Equipment: A sufficient supply of ice and dry ice shall be provided to sufficiently cool the pavement prior to securing the samples from the designated areas in the pavement. The ice should also be used to adjust the temperature of the water used to cool the core bit. A water supply (usually a plastic 35 – 55 gal drum) with sufficient hose to introduce the water into and through the spindle of the coring device by gravity feed. The drum should be white or light in color to minimize excessive thermal heating of the water (*for coring of asphalt rubber cores see Note 1*). At no time shall the water utilized in the coring operation exceed 65° F during the coring operation. Ice shall be utilized o e nsure the temperature control of the water being introduced during the cutting operation. An ice chest or other suitably insulated container that can maintain a temperature of less than 70° F shall be used to secure the specimens during transport. The container will be equipped with flat shelving that will support the drilled cores throughout the entire specimen dimension during transport back to the testing facility.

Miscellaneous hand tools to remove the drilled specimen from the drill hole or the core barrel taking great care in not disturbing the specimen more than necessary (refer to fig. 1 in ASTM D 5361-05).

321.14.4 Process: The pavement surface at the time of coring shall not exceed a temperature of 90° F, the pavement shall be conditioned with ice or dry ice to ensure that this requirement is met. Immediately after it has been ensured that the pavement has dropped to the required temperature, core drilling shall begin. The operator will then apply an even and continuous pressure (Note 2) to penetrate through the full depth of the pavement. The operator will concurrently ensure that enough water is moving over the core surface as to adequately remove any and all cuttings that could damage the drilled core. After the pavement thickness has been penetrated the core shall be carefully removed from either the drill hole or the core barrel and be immediately transferred to an ice chest or other suitable container. Each individual core shall be placed on a shelf in the cooler with the exposed side of the specimen facing down, or the "top side" down. If the specimen is a two lift core, the only acceptable means of separating lifts is with a power or other acceptable wet saw type of equipment (conforming to ASTM D 5361-05); however, at no time shall cores be split using a mallet and screwdriver or metal straight edge when being tested for bulk density. Perpendicularity of the specimen shall be checked in the field after the specimen has been extracted from the surface. The core operator shall hold the core up to eye level and place the core top side down in a "speed square" or small carpenters square. The specimen placed in the square shall not depart from perpendicular to the axis more than 0.5^{o} (approximately equivalent to 1/16 of an inch in 6 inches). If the specimen is outside of this distance from square it shall be discarded in the field and another sample cored that falls within tolerance. The cores upon arriving at the laboratory for testing shall be carefully cleaned and measured for thickness in accordance with ASTM D 3549. A speed square shall be utilized to measure squareness as compared to a 90° degree angle and shall not depart from perpendicular to the axis more than 0.5^{o} (approximately equivalent to 1/16 of an inch in 6 inches). All remaining testing shall be done within the parameters of the current project and / or agency required specification.

End of Section

End of Section

• **Note 1** – It should be noted that when the material to be cored is a rubberized asphalt mixture a wetting agent such as liquid dish soap shall be added to the water barrel to hinder the material from sticking or allowing the binder to spread during coring.

• **Note 2** – This refers to pressure exerted on the core barrel and machine during the coring process. Too much pressure can cause damage to the core barrel and the motor; and too little pressure can cause a glazing of the diamonds, reducing cutting efficiency and premature wear of the barrel.

Date: July 15, 2011

To: MAG Specification and Detail Committee members

From: Jeff Benedict

RE: case 11-24 section 337 “Crack sealing”

Purpose: To add an updated section with clear limits of its use and scope of crack sealing. The MAG did not have any specifications for crack sealing. Crafco, a major vendor was consulted and helped write the specification. We then reviewed it and had agency members review.
This reflects a major change to the current MAG section.

SECTION ~~336~~337

Crack Sealing and Crack Filling

~~336~~337.1 GENERAL:

This work shall consist of an application of hot applied, single component polymer modified asphalt rubber, supplied in solid form used to seal or fill cracks or joints in asphalt concrete or portland cement concrete pavements. Cracks or joints that will be sealed shall be a minimum of ¼ inch wide at time of work, and have a maximum width of 1-1/2 inches ~~wide~~.

The work involves furnishing and placing all materials on existing pavement surfaces in accordance with this specification.

~~336~~337.2 MATERIALS:

Materials shall be a premixed, single component mixture of asphalt cement, aromatic extender oils, polymers, and granulized rubber in a closely controlled manufacturing process. Materials will conform to the following specifications when heated in accordance to ASTM D5078 to the Manufactures maximum safe heating temperatures.

Test	Specification
Cone Penetration (ASTM D5329)	20-40
Resilience (ASTM D5329)	30% Minimum
Softening Point (ASTM D113)	210°F (99°C) Minimum
Ductility, 77F (25C) (ASTM D113)	30 cm Minimum
Flexibility (ASTM D3111 *Modified)	Pass at 30°F (-1°C)
Flow 140°F (60°C) (ASTM D5329)	3 mm Maximum
Brookfield Viscosity, 400°F (204°C) (ASTM D2669)	100 Poise Maximum
Asphalt Compatibility (ASTM D5329)	Pass
Bitumen Content (ASTM D4)	60% Minimum
Tensile Adhesion (ASTM D5329)	400% Minimum
Maximum Heating Temperature	400°F (204°C)
Minimum Heating Temperature	380°F (193°C)

*Specimen bent 90° over a 1-inch mandrel within 10 seconds

~~336~~337.2.1 CERTIFICATION AND QUALITY ASSURANCE:

Prior to application, the Contractor shall submit certification of compliance to the Engineer for all materials to be used in the work.

~~336~~337.3 EQUIPMENT:

The melter applicator unit shall be a self-contained double boiler device with the transmittal of heat through heat transfer oil. It must be equipped with an on board automatic heat controlling device to permit the attainment of a predetermined temperature, and then maintain that temperature as long as required. The unit shall also have a means to vigorously and continuously agitate the sealant to meet the requirements of Appendix X1.1 of ATSM D6690. The sealant shall be applied to the pavement under pressure supplied by a gear pump with a hose and wand and direct connecting applicator tip. The pump shall have sufficient pressure to apply designated sealant at a rate of at least three (3) gallons (11.4 L) per minute. Melter applicators shall be approved for use by the sealant manufacturer.

~~336~~337.4 APPLICATION:

The sealant shall be applied in the crack or joint reservoir uniformly ~~solid~~ from bottom to top and shall be filled without formation of entrapped air or voids.

The crack or joint shall be slightly overfilled then leveled with a 3" sealing disk or v-shaped squeegee to create a neat band aid extending ± 1" on each side of the crack or joint for surface strength and waterproofing. The band aid shall not be more than 1/8 inch in thickness above the pavement surface.

If the pavement being sealed will be overlaid with Hot Mix Asphalt within six months of sealant application, cracks shall be routed, and sealant placement shall be recessed ¼" (6 mm) in the crack or joint reservoir with no over band. If routing is not used, the sealant over band thickness and width should be kept as narrow and thin as possible.

~~336~~337.5 CLEANING AND PREPARING CRACKS OR JOINTS:

Prior to application of polymer modified asphalt rubber, all cracks or joints shall be cleaned out of any debris and dust. As directed by the Engineer, final cleaning of the ~~Cracks~~ cracks or joints shall be ~~cleaned~~ by blowing or vacuuming. Routing Cracks and joints ~~may~~will~~will~~ extend crack sealant life and performance. Most cracks in Maricopa County have less than 1/8" movement over the course of a year. On cracks that have spacing which creates more than 1/8" movement it is recommended that cracks be routed.

~~336~~337.5.1 ROUTING:

Routing operation should be used to create a sealant reservoir. Cutting should remove at least 1/8" (3 mm) from each side and produce vertical, intact surfaces with no loosely bonded aggregate. Joints and cracks should be routed to a ¾" (19mm) W x ¾" (19mm) D configuration for a typical application. ~~A low profile~~

~~configuration of 1 ½" (40mm) W x 3/8" (10mm) D may be used in colder climates however studies also suggest a 2:1 maximum ratio for enhanced thermal movement performance. If crack sealing is performed on a previously chip sealed or slurried surface, the low profile configuration depth should be 5/8" (15mm) D. The pavement should be sound enough to resist significant spalling during cutting. Final reservoir width should not exceed twice the cutter width or 1 ½" (38mm) maximum.~~

~~336~~337.5.2 BLOWING:

Final cleaning shall use high pressure 90 psi (620 ~~kpa~~kPa) minimum, dry, oil free compressed air to remove any remaining dust. Both sides of the crack or joint shall be cleaned. Surfaces will be inspected to assure adequate cleanliness and dryness.

~~336~~337.5.3 VACUUMING:

Final cleaning shall thoroughly clean cracks and joints to a minimum of 1". The vacuum unit shall use high pressure 90 psi (620 ~~kpa~~kPa) minimum, dry, oil free compressed air to remove any remaining dust, directly attached to a vacuum unit to collect the dust and residue. Both sides of the crack or joint shall be cleaned. Surfaces will be inspected to assure adequate cleanliness and dryness.

~~336~~337.6 OPENING TO TRAFFIC:

Material shall not be exposed to traffic until fully cured. If sealed area must be open to traffic a blotter material can be applied to surface of polymer modified asphalt rubber.

~~336~~337.6.1 BLOTTER:

On two lane roads or where traffic may be likely to come in contact with the hot sealant before it cures, a blotter or specialized detackifying material may be required to prevent asphalt bleed and/or pickup of sealant by vehicular traffic. Blotter material should be compatible with crack sealant and any surface treatment being used.

~~336~~337.7 PAVEMENT TEMPERATURES

Polymer modified asphalt rubber shall be applied when pavement temperature exceeds 40°F (4°C). Lower temperatures may result in reduced adhesion due to the presence of moisture or ice. If pavement temperature is lower that 40°F (4°C), it may be warmed using a heat lance that puts no direct flame on the pavement. If installing at lower pavement temperatures that 40°F (4°C), extreme care should be used to insure that cracks or joints are dry and free from ice and

other contaminates. Product temperatures should be maintained at the maximum heating temperature recommended by the manufacture. If installing at night, ensure that dew is not forming on the pavement surface. Applied product should be checked by qualified personnel to ensure that adhesion is adequate.

~~336~~337.8 MEASUREMENT:

The cleaning and sealing of cracks and joints shall be measured by the lineal foot.

~~336~~337.9 PAYMENT:

Payment will be full compensation for furnishing and placing all materials specified and used, with no allowance for waste, and shall include labor, equipment, tools, and incidentals to complete the work as prescribed and as directed by the Engineer.

No payment will be made for materials rejected due to improper placement, improper proportions of materials. Or material found to be defective or out of specifications.

Date: July 15, 2011

To: MAG Specification and Detail Committee members

From: Jeff Benedict

RE: case 11-25 section 713 “Emulsified Asphalt Materials ”

Purpose: To updated this section with current specifications. The MAG section did not have a PMQSH product that is used in slurry applications. This was added. We had slurry producers review as well as the emulsion manufacturers reviewed it. Minor changes to the specification table to bring it in to current standards.

This reflects a minor change to the current MAG section.

SECTION 713

EMULSIFIED ASPHALT~~S~~ MATERIALS

713.1 GENERAL:

Emulsified asphalts shall be composed of a paving asphalt base uniformly emulsified with water and an emulsifying or stabilizing agent. It shall be homogeneous throughout and if stored, shall show no separation of ingredients within 30 days after delivery. Emulsified asphalt shall be classified as quick setting, rapid setting, medium setting or slow setting type in either anionic or cationic emulsions.

Emulsified asphalt shall be specified as follows:

(A) Penetration type and high viscosity type emulsion shall be designated by the letters RS-Rapid Setting.

(B) Mixing type emulsion shall be designated by the letters SS-Slow Setting, MS-Medium Setting and QS-Quick Setting.

713.2 TESTING REQUIREMENTS:

The emulsified asphalt shall conform to the requirements set forth in Table 713-1.

713.3 TESTS REPORT AND CERTIFICATION:

Test reports and certifications shall be made in accordance with Section 711.

TABLE 713-1

REQUIREMENTS FOR ANIONIC EMULSIFIED ASPHALT (Specification Designation)

Type	Rapid-Setting				Medium-Setting						Slow-Setting			
Grade	RS-1		RS-2h		MS-1		MS-2		MS-2h		SS-1		SS-1h	
	Min.	Max.	Min.	Max.	Min.	Max.	Min.	Max.	Min.	Max.	Min.	Max.	Min.	Max.
Tests on emulsions Viscosity, Saybolt Furol at 77°F (25°C.), sec	20	100			20	100	100		100		20	100	20	100
Viscosity, Saybolt Furol at 122°F (50°C.), sec			75	400										
~~Settlement, 24 hour day, percent~~		~~1~~		~~1~~		~~1~~		~~1~~		~~1~~		~~1~~		~~1~~
Demulsibility, 35 ml. 0.02 N. $CaCl_2$, percent	60		60											
Coating ability and water resistance														
Coating, dry and aggregate					good		good		good					
Coating, after spraying					fair		fair		fair					
Coating, wet aggregate					fair		fair		fair					
Coating, after spraying					fair		fair		fair					
Cement mixing test, percent												2		2
Sieve test, percent		0.1		0.1		0.1		0.1		0.1		0.1		0.1
Residue by distillation, percent	55		63		55		65		65		57		57	
Tests on Residue from Distillation Test: Penetration 77°F (25°C), 100g, 5 s	100	200	40	90	100	200	100	200	40	90	100	200	40	90
Ductility, 77°F (25°C), 5 cm/min. cm.	40		40		40		40		40		40		40	
Solubility in trichloroethylene, %	97.5		97.5		97.5		97.5		97.5		97.5		97.5	

TABLE 713-1 (continued)

REQUIREMENTS FOR ANIONIC/CATIONIC EMULSIFIED ASPHALT
(Specification Designation)

Type	Quick Setting				Rapid Setting				Medium Setting				Slow Setting				Quick Setting
Grade	QSH		CQSH		CRS-1		CRS-2h		CMS-2		CMS-2h		CSS-1		CSS-1h		PMCQS-1h
	Min	Max	Min	Max	Min	Max	Min	Max	Min	Max	Min	Max	Min	Max	Min	Max	Min Max
Tests on emulsions:																	
Visc., Saybolt Furol at 77°F., sec.	20	100	20	100									20	100	20	100	20 100
Visc., Saybolt Furol at 122°F., sec					20	100	100	400	50	450	50	450					
~~Settlement, 24 hour day, percent~~Storage Stability Test, 1 day, %	1		1		1	~~1~~	1	~~1~~	1	~~1~~	1	~~1~~	1	~~1~~	1	~~1~~	1
Demulsibility, 35 ml 0.8% sodium dioctyl sulfosucinate, %					40		40										
Coating ability and water resistance:																	
Dry aggregate									Good		Good						
after spraying									Fair		Fair						
wet aggregate									Fair		Fair						
after spraying									Fair		Fair						
Particle charge test	~~Negative~~		Positive		Positive		Positive		Positive		Positive		Positive		Positive		Positive
Sieve Test, %	0.10		0.10		0.10		0.10		0.10		0.10		0.10		0.10		
Cement Mixing test, %														2.0		2.0	
Distillation:																	
Oil distillate, by volume of emulsion, %						3		3		12		12					
Residue, %	57		57		60		65		65		65		57		57		60
Test on Residue from distillation test:																	
Penetration, 25°C (77°F), 100 g. 5 sec.	40	110	40	110	100	250	40	90	100	250	40	90	100	250	40	90	55 75
Ductility, 25°C (77°F.) 5 cm per min, cm.	40		40		40		40		40		40		40		40		40
Ring and Ball Softening Point, AASHTO T53																	130
Elastic Recovery, % AASTHO T30																	55
Solubility in trichloroethylene, %	98		98		98		98		98		98		97.5		97.5		97.5
~~Storage Stability Test, 1 day, %~~	~~1~~		~~1~~														

* If the Particle Charge Test result is inconclusive for CSS-1 ~~and~~or CSS-1h, material having a maximum ~~pil~~ph value of 6.7 will be accepted.

* If using PMCQS-1h the Residue from distillation shall be obtained from ARIZ 504.

713.4 TEMPERATURES:

Unless otherwise specified, the various grades of emulsified asphalt shall be applied at temperatures within the limits specified in Table 713-2 the exact temperature to be determined by the Engineer. Emulsified asphalt shall be reheated if necessary. But at no time, after loading into a tank car or truck for transportation to the work site, shall the temperature of the emulsion be raised above the maximum temperature shown in Table 713-2. During all reheating operations, the emulsified asphalt shall be agitated to prevent localized overheating. Emulsified asphalt shall not be permitted to cool to a temperature of less than 40 degrees F.

TABLE 713-2		
APPLICATION TEMPERATURE OF EMULSIFIED ASPHALT		
Grade of Emulsified Asphalt	**Minimum °F.**	**Maximum °F.**
RS-1, MS-1, SS-1, SS-Ih, CSS-1, CSS-1h	70°F.	140°F.
RS-2, MS-2, MS-2h, CRS~~ers~~-1, PMCQS-1h CRS-1h, CRS-2h, CMS-2, CMS-2h, QSH, CQSH	125°F.	185°F.

Emulsified asphalt shall be heated in such a manner that steam or hot oils will not be introduced directly into the emulsified asphalt during heating.

713.5 CONVERSION OF QUANTITIES:

When pay quantities of emulsified asphalt are determined from volumetric measurements, the volumetric measurement at any temperature shall be reduced to the volume the material would occupy at 60 degrees F. in accordance with ASTM D-1250. In converting volume to weight, the computations shall be based on Table 713-3.

TABLE 713-3		
EMULSIFIED ASPHALTS QUANTITY CONVERSION		
Grade of Material	**Gals Per Ton at 60°F.**	**Lbs Per Gal. at 60°F.**
All grades	240	8.33

Date: July 15, 2011

To: MAG Specification and Detail Committee members

From: Jeff Benedict

RE: case 11-26 section 332 and 715 Slurry Seal material and application

Purpose: This case has moved material items into 715 and updated 332 applications sections to bring specification into current practice and technologies.

Revisions: Moved job mix formula to 715 from 332 (in whole) cleaned up language and updated 715 to allow the use of the polymer modified emulsion binders.
This will be a major change to both sections, though only the addition of the PMQSH is an addition. Tables are clearer and updated.

SECTION 332

PLACEMENT AND CONSTRUCTION OF ASPHALT EMULSION SLURRY SEAL COAT

332.1 DESCRIPTION:

The work covered by this specification consists of furnishing all labor, equipment, and materials necessary to perform all operations required for the application of an asphalt emulsion slurry surface.

NOTE . . . THESE SPECIFICATIONS DO NOT COVER THE APPLICATION OF COAL TAR SLURRY SEALS.

332.2 MATERIALS:

The asphalt emulsion material, mineral aggregate and mineral filler shall be as specified in Section 715.

~~**332.3 DETERMINATION OF JOB MIX:**~~

~~The job mixture shall be designed to provide a suitable surface for traffic conditions, climate and curing. All materials shall be pre-tested in a qualified laboratory to determine their suitability for use in the slurry seal. The Wet Track Abrasion Test (W.T.A.T.) will be used for design purposes to establish the mix design to be used in the specified slurry seal.~~

~~The test will show a maximum wear loss of 75 grams per square foot. Samples of materials to be used on the job shall be used to run the W.T.A.T. The test will be performed in accordance with ASTM D-3910 Design Testing and Construction of Slurry Seal.~~

~~**332.3.1 Composition of Slurry Seal Mixtures:** The job mixture shall conform to the requirements of the contract documents. The mixture shall attain an initial set in not less than 5 minutes not more than one hour. In cases where the surface is not critical to be open to traffic, a longer set time may be allowed, however not to exceed 12 hours. The setting time may be adjusted by the addition or removal of approved mineral fillers or chemical agents. The mixture shall be one of three types whose combined aggregates conform to the graduation requirements of Table 715-1. The mixture shall be sufficiently free flowing to fill cracks in the pavement. The mixture shall not segregate during or after laydown. The mixture shall produce a skid-resistant surface.~~

~~**332.3.2 Trial Applications:** The Contractor shall place a test strip of 60 square yards in the area designated by the Engineer. The test section shall be placed using the same equipment and methods as will be used on the job. The slurry mixture placed in a test strip shall conform to the design mix as determined by the W.T.A.T. with minor variations to obtain crack filling, set time, pavement bond and a skid resistant texture. If the materials do not meet the requirements for fluidity, non-segregation, or surface texture, a new job mix shall be formulated and tested. Work shall not proceed before approval of design mix and acceptance following the placing of a test strip.~~

332.3~~4~~ EQUIPMENT:

332.3~~4~~.1 General: When requested by the Engineer, descriptive information on the slurry seal mixing and applications equipment to be used will be submitted for approval no less than 7 days before the work starts.

332.3~~4~~.2 Self Contained Slurry Machine: The mixing machine will be a continuous flow type. It will be capable of accurately delivering a predetermined proportion of pre-wetted aggregate, mineral filler, water and asphalt emulsion to the mixing chamber and discharging the thoroughly blended mixture on a continuous basis. The mixing machine will be equipped with a mineral filler feeder. The feeder will have an accurate metering device or method to introduce a predetermined proportion into the mixer. The filler will be introduced into the mixing chamber at the same time and location as the aggregate.

The mixing machine will be equipped with a water pressure system and fog-type spray bar, adequate for complete water fogging of the surface to be sealed.

The mixing machine will be mounted on a truck or other vehicle capable of producing evenly controlled low rates of speed throughout the operation to ensure the slurry is spread evenly and all cracks are filled.

332.34.3 Slurry Spreading Equipment: Attached to the mixer machine shall be a mechanical type squeegee spreader equipped with flexible material in contact with the surface to prevent loss of slurry from the distributor. It shall be maintained to prevent loss of slurry on varying grades and crown by adjustments to assure uniform spread. There shall be a steering device and a flexible strike-off. The spreader box shall have an adjustable width. The box shall be kept clean. Build-up of asphalt and aggregate on the box shall not be permitted. The use of burlap drags or other drags shall be approved by the Engineer.

332.34.4 Rollers: Rollers shall be approved by the Engineer.

332.34.5 Cleaning Equipment: Power brooms, pick-up brooms, air compressors, water flushing equipment, and hand brooms shall be suitable for cleaning the surface and cracks of the old surface.

332.34.6 Auxiliary Equipment: Hand squeegees, shovels, and other equipment shall be provided as necessary to perform the work.

332.45 PREPARATION OF THE SURFACE:

332.5.1 Immediately before applying the slurry, the area to be surfaced shall be cleaned of dirt, loose material, and other objectionable material. In urban areas, the surface shall be cleaned with a self-propelled pick-up sweeper. In rural areas, power brooms may be used. When necessary, cleaning shall be supplemented by hand brooms. Water flushing will not be permitted in areas where cracks are present in the pavement surface.

The slurry shall not be applied until an inspection of the surface has been made by the Engineer and he has determined that it is suitable.

332.45.2 Tack Coat: When specified, a tack coat shall be applied in accordance with Section 329 using the same type and grade of asphalt emulsion as specified for the slurry seal.

332.45.3 Water Fogging: When required by local conditions, the surface, directly ahead of the slurry box, shall be pre-wetted by fogging. The fogging shall be accomplished in such a manner that the entire surface is damp with no apparent flowing water or puddles.

332.56 WEATHER LIMITATIONS:

The slurry seal shall not be applied unless the pavement temperature is at least 45°F. and rising. The mixture shall not be applied during unsuitable weather.

332.67 PROTECTION OF UNCURED SURFACE:

Adequate methods such as barricades, flagmen, pilot cars, etc., shall be used to protect the uncured slurry surface from all types of traffic.

332.78 MIXING AND APPLICATION:

The mixing time shall not exceed four minutes. Excessive mixing will not be allowed. The resulting mixture shall have the desired consistency, when placed on the surface. If breaking, hardening, segregation, balling or lumping occurs during the mixing process, the batch will be discarded.

A sufficient amount of slurry shall be carried in all parts of the spreader at all times so that a complete coverage is obtained.

No streaks caused by oversized aggregate shall be left in the finished surface. Build-up on longitudinal and transverse joints will be kept to a minimum. Approved squeegees shall be used to spread slurry in areas nonaccessible to the slurry mixer.

332.8~~9~~ ROLLING:

As soon as the asphalt slurry has been set sufficiently to prevent any material from being picked up, it shall be rolled until all ridges have been ironed out and a uniform surface is obtained.

332.9~~10~~ MEASUREMENT:

Quantities and materials for this work will be paid for at the contract price per unit of measurement for each of the following pay items as indicated in the proposal.

(A) Bituminous tack coat if specified	Ton (Diluted)
(B) Emulsified asphalt for slurry	Ton (Undiluted)
(C) Aggregate for slurry	Ton (Surface Dry)

SECTION 715

SLURRY SEAL MATERIALS

715.1 GENERAL:

Slurry seal shall consist of a properly proportioned mixture of emulsified asphalt, mineral aggregate, mineral fillers, additives (if necessary), and water.

All material sources must be approved prior to their use. The Contractor will submit a job mix formula and if requested prequalifications for materials~~ samples~~ at least seven days prior to start of ~~construction. When~~construction. When requested, additional samples will be furnished during the construction period at no cost to the Contracting Agency. This is a non-pay item.

715.2 AGGREGATE:

715.2.1 Mineral Filler: Mineral filler shall consist of finely divided matter, such as hydrated lime, ~~portland~~Portland cement, limestone dust or fly ash, conforming to the requirements of ASTM D-4318. Mineral filler shall be used only when needed to reduce the setting time, to improve the workability or to reduce the stripping characteristics of the aggregate emulsion mixture. The minimum amount of the required filler will be used and it will be considered as part of the blended aggregate. The expected range shall be between .25% and 2.0% by weight of aggregate.

715.2.2 Mineral Aggregate: Mineral aggregate shall consist of sound and durable sand and/or crushed stone as per MAG Section 701 combined with an approved mineral filler where it is required. The mineral filler will be considered as part of the blended aggregate. The material shall be non-plastic (ASTM D-4318) with a sand equivalent (ASTM D-2419) of at least 50. The abrasion loss (ASTM C-131) shall not exceed 35 percent. Historical test data from source aggregate may be used that was run within the past two years.~~Ninety percent of the aggregate retained on the No. 50 sieve shall have at least one fractured face.~~ Mineral aggregates used shall be 100% crushed. No natural sand shall be allowed. The gradation of ~~material~~mineral aggregate without mineral filler shall conform to Table 715-1.

TABLE 715-1			
SLURRY SEAL AGGREGATE			
SIEVE SIZE	Type I % PASSING	Type II % PASSING	Type III % PASSING
3/8	100	100	100
No. 4	100	85/100	70/90
No. 8	90/100	65/90	45/70
No. 16	65/90	45/70	28/50
No. 30	40/60	30/50	19/34
No. 50	25/42	18/30	12/25
No. 100	15/30	10/21	7/18
No. 200	10/20	5/15	5/15
Emulsified Asphalt content as a % of Dry Wt. Of Aggregate (approx.) ASTM D-3910 (W.T.A.T. TEST)	18	16	14
Residual Asphalt Range requirements % of Dry Wt. of Aggregate ASTM D-3910 (W.T.A.T. TEST)	10-16	7.5-13	6.5-12

Pounds of Aggregate per Square Yard (approx.)	8-10	12-18	18-25

715.3 BITUMINOUS MATERIAL:

The emulsified asphalt used for seal coating shall be quick setting or slow setting as per Section 713. Polymer modified cationic quick setting emulsion (PMCQS-1h) may be used when approved by the Engineer.

The quick setting emulsified asphalt shall be of the anionic or cationic quick set type such as QSH, ~~or~~ CQSH, or PMCQS-1h that will react to chemically active mineral fillers such as ~~p~~Portland cement in such a way that the applied slurry mixture can support controlled traffic in 45-60 minutes after application. The amount of chemically active filler shall be determined by job mix formula~~mix design~~ and field performance.

Polymer modified cationic quick setting emulsion (PMCQS1-h) shall be homogeneous and the polymer used shall consist of either a solid polymer milled / blended into the asphalt or latex blended into the emulsifier solution prior to the emulsification process. The PMCQS-1h shall contain a minimum of three percent polymer and shall conform to section 713.

Slow setting emulsion may be used when traffic control is not a critical item.

Quick Set Emulsion Mix Properties	
Slurry Seal Mixing, 70-85 degree F., Sec.	120 Sec. Min.
Slurry Seal Setting text, 70-85 degree F., 1 hour cure	No Brown Stain
Slurry Seal Water Resistance Test, 70-85 degree F., 30 minute cure	No More Than Slight Discoloration

~~Slow setting emulsion may be used when traffic control is not a critical item.~~

Placement of slurry seal is temperature dependent and should be tested under field conditions.

715.4 WATER:

Water shall be potable and be compatible with the slurry ingredients used.

714.5 DETERMINATION OF JOB MIX FORMULA:

The job mixture shall be designed to provide a suitable surface for traffic conditions, climate and curing. All materials shall be pre-tested in a qualified laboratory to determine their suitability for use in the slurry seal. The Wet Track Abrasion Test (W.T.A.T.) will be used for design purposes to establish the mix design to be used in the specified slurry seal.

The test will show a maximum wear loss of 75 grams per square foot. Samples of materials to be used on the job shall be used to run the W.T.A.T. The test will be performed in accordance with ASTM D-3910 Design Testing and Construction of Slurry Seal.

715.5.1 Composition of Slurry Seal Mixtures: The job mixture shall conform to the requirements of the contract documents. The mixture shall attain an initial set in not less than 5 minutes not more than one hour. In cases where the surface is not critical to be open to traffic, a longer set time may be allowed, however not to exceed 12 hours. The setting time may be adjusted by the addition or removal of approved mineral fillers or chemical agents. The mixture shall be one of three types whose combined aggregates conform to the graduation requirements of Table 715-1. The mixture shall be sufficiently free flowing to fill cracks in the pavement. The mixture shall not segregate during or after laydown. The mixture shall produce a skid-resistant surface.

715.5.2 Trial Applications: The Contractor shall place a test strip of 60 square yards in the area designated by the Engineer. The test section shall be placed using the same equipment and methods as will be used on the job. The slurry mixture placed in a test strip shall conform to the design mix as determined by the W.T.A.T. with minor variations to obtain crack filling, set time, pavement bond and a skid resistant texture. If the materials do not meet the requirements for fluidity, non-segregation, or surface texture, a new job mix shall be formulated and tested. Work shall not proceed before approval of design mix and acceptance following the placing of a test strip.

715.~~5~~6 TEST CERTIFICATES & REPORTS:

Test certificates and reports for the bituminous material shall be furnished in accordance with Section 711.

715.~~6~~7 CONVERSION OF QUANTITIES:

Volumetric conversions shall be accomplished in accordance with Section 713.

~~**TABLE 715-1**~~			
~~**SLURRY SEAL AGGREGATE**~~			
~~**SIEVE SIZE**~~	~~**Type I % PASSING**~~	~~**Type II % PASSING**~~	~~**Type III % PASSING**~~
~~3/8~~	~~100~~	~~100~~	~~100~~
~~No. 4~~	~~100~~	~~85/100~~	~~70/90~~
~~No. 8~~	~~90/100~~	~~65/90~~	~~45/70~~
~~No. 16~~	~~65/90~~	~~45/70~~	~~28/50~~
~~No. 30~~	~~40/60~~	~~30/50~~	~~19/34~~
~~No. 50~~	~~25/42~~	~~18/30~~	~~12/25~~
~~No. 100~~	~~15/30~~	~~10/21~~	~~7/18~~
~~No. 200~~	~~10/20~~	~~5/15~~	~~5/15~~
~~Emulsified Asphalt content as a % of Dry Wt. Of Aggregate (approx.) ASTM D-3910 (W.T.A.T. TEST)~~	~~18~~	~~16~~	~~14~~
~~Residual Asphalt Range requirements % of Dry Wt. of Aggregate ASTM D-3910 (W.T.A.T. TEST)~~	~~10-16~~	~~7.5-13~~	~~6.5-12~~
~~Pounds of Aggregate per Square Yard (approx.)~~	~~8-10~~	~~12-18~~	~~18-25~~

Date: July 15, 2011

To: MAG Specification and Detail Committee members

From: Jeff Benedict

RE: case 11-27 section 335 “Hot asphalt rubber seal (chip)

Purpose: to bring specification into current practice and technologies. Elimination of extender oils and insertion of some current practices of blending the rubber binder.

Revisions: many to binder and elimination of versions of asphalt rubber binder. There is only one version in this specification

SECTION 335

PLACEMENT AND CONSTRUCTION OF **HOT ASPHALT-RUBBER SEAL**

335.1 DESCRIPTION~~GENERAL~~:

This work shall consist of applying an application of asphalt-rubber binder, a combined mixture of hot paving grade asphalt and ~~ground tire~~crumb rubber modifier. It shall be immediately covered with a cover material.

The work involves furnishing and placing all materials on existing pavement surfaces in accordance with this specification.

~~This specification includes the two approved processes for the production of Asphalt Rubber. Method A uses ground reclaimed vulcanized rubber and a extender oil. Method B uses ground reclaimed vulcanized rubber and a kerosene dilutent. Either method is acceptable based on proper compliance with the specifications and certifications of materials.~~

335.2 MATERIALS:

The asphalt~~, granulated~~ rubber ~~,~~binder ~~extender oil, and kerosene~~ shall comply with Section 717. Sand Blotter shall comply with Section 333. Cover material shall be precoated and comply with Section 716 ~~(PRECOATED)~~. ~~Tack coat shall comply with Section 329. Flush~~ Fog seal coats shall comply with Section 333.

335.2.1 Certification and Quality Assurance: Prior to application, the Contractor shall submit certification of compliance to the Engineer at least 7 days prior to application for all materials to be used in the work. For example: Asphalt-rubber binder designs (section 717), cover material test results (section 716), sand blotter material (section 333), fog seal coats (section 333), and any additional materials used on the project.

335.3 EQUIPMENT:

335.3.1 General: The method and equipment for combining the crumb rubber modifier and hot paving grade asphalt shall be so designed and accessible that the Engineer can readily determine the percentage by weight of each of two materials being incorporated into the mixture.

All equipment shall meet requirements of Section 330 with the following modifications:

(A) Pneumatic-tired rollers: At least three pneumatic-tired rollers shall be used. Each roller shall carry a minimum of 5,000 pounds on each wheel and a minimum of 90 psi in each tire. Rollers shall not travel in excess of 12 mph.

(B) Distributor: The distributor must be equipped with a mechanical mixing device.

335.3.2 Mechanical Pre-Blender: Crumb ~~R~~rubber modifier and the hot paving grade asphalt ~~(and extender oil in Method A)~~ for the asphalt-rubber binder~~blend~~ may be pre-blended prior to introduction of the blend into the distributor.

The mechanical pre-blender shall be equipped with an asphalt totalizing meter in gallons and a flow rate meter in gallons per minute.

335.4 MIXING:

~~The percentage of rubber shall be 22% plus or minus 2% by weight of the total mixture. Mixing shall continue in the temperature range of 250 degrees F. to 450 degree F. until the consistency of the mixture approaches that of a semi-fluid material (i.e., reaction is complete). At the lower temperature, it will require approximately 30 minutes for the reaction to take place after the start of the addition of rubber. At the high temperature, the reaction will take place within approximately five minutes. Therefore, the temperature used will depend on the type of application and the~~

~~methods used by the Contractor. Viscosity of the asphalt rubber shall be more than 500 centipoises and less than 4000 centipoises at the time of application (ASTM D-2994).~~ Mixing shall be done in accordance with section 717. Application shall proceed immediately upon the asphalt-rubber binder requirements being met.~~reaching the proper consistency.~~

~~**335.4.1 Adjustment to Spraying Viscosity with Diluent:** After the full reaction described in MIXING – Section 335.4 has occurred, the mix can be diluted with a kerosene type diluent. The amount of diluent used shall be less than 7.5 percent by volume of the hot asphalt rubber composition as required for adjusting viscosity for spraying or better wetting of the cover aggregate. Temperature of the hot composition shall not exceed the kerosene initial boiling point at the time of adding diluent.~~

335.5 CONSTRUCTION:

Prior to placing the hot asphalt-rubber binder~~seal coat~~, soil and other objectionable materials shall be removed from the pavement surface. ~~and a tack coat applied as specified in Section 329.~~

The application rate of the hot asphalt-rubber binder~~mixture~~ shall be 0.55 to ~~0.65~~0.70 gallons per square yard or as directed by the Engineer based on field conditions. Material shall be applied at temperatures of 350~~375~~ degrees F. to 400~~425~~ degrees F. ~~for Method A and 300 degrees F. to 350 degrees F. for Method B.~~ The application of the cover material shall follow as close as possible behind the distributor truck.

The cover material shall be preheated immediately prior to application and precoated as specified in Section 716 - PRECOATED. The temperature of the precoated chips shall be in accordance with Section 330.

Hot asphalt-rubber binder~~seal~~ with hot precoated cover aggregate shall be placed only when the ambient temperature is at least 60 degrees F. and rising, on a dry surface and there is no imminent threat of rain.

The rate of application of the cover material shall be from ~~25~~18 to ~~35~~25 pounds per square yard for the ~~1/4 inch nominal size~~ Low Volume Chip or ~~30~~28 to ~~40~~35 pounds per square yard for the ~~3/8 inch nominal size~~ High Volume Chip, or as directed by the Engineer.

The rolling of the cover material shall proceed immediately after application in order to insure maximum embedment of the aggregate. Sufficient rollers shall be used for the initial rolling to cover the width of the aggregate spread with one pass. The first pass shall be made immediately behind the aggregate spreader. If the spreading is stopped for an extended period, the spreader shall be moved ahead or off to the side so that all cover material may be immediately rolled. Three (3) complete passes with rollers shall be made with all rolling completed within one (1) hour after the application of the cover material.

The Contractor shall sweep all joint edges clean of overlapping cover material prior to the adjacent application of asphalt-rubber binder~~material~~. Transverse joints shall be made by placing building paper over the ends of the previous applications. The joining application shall start on the building paper. Once the application process has progressed beyond the paper, the paper shall be removed and disposed of to the satisfaction of the Engineer. All reasonable precautions shall be taken to avoid skips and overlaps at joints and to protect the surfaces of adjacent structures, trees and shrubs, etc., from being spattered or marred. Correction of any such defects will be required at no additional cost to the Contracting Agency.

Traffic will not be permitted on the surface until after sweeping operations have finished and the cover aggregate has set. Traffic control shall be in accordance with Section 401 as supplemented by the Contracting Agency.

At signalized intersections, an application of 2 to 5 pounds of sand blotter per square yard shall be applied through the intersection and for a distance of 200 feet each way from the near curb returns after rolling and before opening a lane to traffic. Sand Blotter shall meet requirements of section 333.

After sweeping and prior to striping, a fog seal~~flush~~ coat shall be applied to the asphalt-rubber seal~~treatment~~ consisting of 0.05 to 0.10 gallons per square yard according to Section 333. The application of the fog seal~~flush~~ coat may be delayed to facilitate curing or to avoid placement under unfavorable high temperature conditions.

Note: The fog seal~~flush~~ coat shall not be applied to the area 200 feet either side of and through signalized intersections.

335.6 MEASUREMENT:

Certified weight slips of all materials shall be delivered to the Engineer before the materials are applied.

Certified weight slips of any bituminous material being weighed back in for credit shall be delivered to the Engineer for the next day.
Quantities of materials for this work will be paid for at the contract price per unit of measurement for each of the following pay items actually used on the project.

(A) ~~Hot Precoated Chips~~Cover Material (Precoated) Ton

(B) Asphalt Rubber Binder Ton

(C) Emulsified Asphalt (Fog Seal) Ton (diluted)

(D) Sand Blotter Ton (surface dry)

335.7 PAYMENT:

Payment will be full compensation for furnishing and placing all materials specified and used, with no allowance for waste, and shall include labor, equipment, tools, and incidentals necessary to complete the work as prescribed in the specifications -and as directed by the Engineer.

Asphalt cement for precoating chips will be included in the price per ton for hot precoated chips.

No payment will be made for materials rejected due to improper placing, improper proportions of materials, or materials found to be defective.

Date: July 15, 2011

To: MAG Specification and Detail Committee members

From: Jeff Benedict

RE: case 11-28 section 716 “Cover material (chips)

Purpose: To bring current practices and specifications into this section.

Revisions: Minor revisions only. A better description of “pre-coat” and method. MAG sections were updated or eliminated as the references needed.
Screens size and passing requirements remained the same.

SECTION 716

COVER MATERIAL

716.1 GENERAL:

Cover material "chips" shall consist of precoated or uncoated aggregate spread in conjunction with a bituminous or asphalt-rubber seal coat.

716.2 ~~STONE CHIPS~~COVER MATERIAL AGGREGATE:

~~**716.2.1 General:** The stone chips shall be crushed rock as per Section 701 except as modified below.~~

716.2.12 ~~Tests~~Properties:

1. ~~The chips' weight loss~~ When tested in accordance with AASHTO T 96, the loss shall not exceed 40 percent ~~of~~ at 500 revolutions ~~where tested in accordance with ASTM C-131~~.
1.

2. ~~The chips shall not show a loss in excess of 12 percent~~ W~~w~~hen tested in accordance with AASHTO T-104 (Sodium Sulfate Soundness), the loss shall not exceed 12 percent
2.

When tested in accordance with Ariz 212,

3. a~~A~~ minimum of 75 percent, by weight, of the material~~, by weight,~~ retained on the No. 8 sieve, shall have at least one fractured face ~~produced by the crushing operation~~.

716.2.3 Gradation: When tested in accordance with ~~ASTM~~ AASHTO T 27 and T 11~~C-136 and C-117~~, the gradation shall comply with Table 716-1 and/or Table 716-2.

TABLE 716-1	
COVER MATERIAL (CHIPS) GRADATION For Low Volume Traffic Only	
Sieve Size	Percent Passing
½ inch	100
3/8 inch	97/100
1/4 inch	70/100
#8	0-5
#200	0-2

Table 716-2	
COVER MATERIAL (CHIPS) GRADATION For High Volume Traffic	
Sieve Size	Percent Passing
3/4 inch	100
½ inch	97/100
3/8 inch	70/100
1/4 inch	0-10
#8	0-5
#200	0-2

716.3 PRECOATED CHIPS:

When specified, the aggregate shall be heated and precoated with asphalt cement as specified in Section 711. The quantity of bituminous material used shall not be less than 0.30 percent or greater than 0.70 percent of the combined weight of the bituminous material and the aggregate to achieve a "salt and pepper" appearance..

The final percentage of asphalt used for coating shall be as directed by the Engineer. The precoating shall be done in a drum mix hot plant. With approval of the Engineer,a pug mill mixing facility may be used ~~for a minimum of 30 seconds or until the asphalt is present on the aggregate, whichever is greater. With approval of the Engineer, a drum mix plant may be used, however, the end result shall produce a uniform, dust free product~~.

716.4 UNCOATED CHIPS:

When liquid or paving grade asphalt is used as the bituminous binder, the uncoated chips shall not contain moisture in excess of a saturated surface dry condition.

When emulsified asphalt is used as the bituminous binder, the uncoated chips shall be surface wet but free from running water.

Case 11-29

DATE: July 13, 2011

TO: MAG Specification and Details Committee Members

FROM: Brian Gallimore, Materials Working Group/AGC

RE: Section 701 – Rock, gravel and sand

PURPOSE: Moved material to their respective corresponding sections

REVISIONS:
a) Clarify course aggregate, boulders and cobbles
b) Removed quarry stone

SECTION 701

AGGREGATE

701.1 GENERAL:

The definitions for coarse and fine aggregates are per ASTM D2487. Material property requirements for specific uses are listed in the applicable MAG section.

701.2 COARSE AGGREGATE:

Coarse Aggregate shall be clean, hard, sound, durable, uniform in quality, and free of any detrimental quantity of soft, friable, thin elongated, or laminated pieces, disintegrated material, organic matter, oil, alkali, or other deleterious substance. Aggregate sources shall include but not be limited to alluvial deposits, terrace aggregates, quarried stone, or other suitable sources including recycled products as approved by the Engineer. Classification shall be made by size as noted below.

701.2.1 Boulders: Particles of rock as defined above that will not pass a 12-in. square opening.

701.2.2 Cobbles: Particles of rock as defined above that will pass a 12-in. square opening, but will be retained on a 3-in. square opening.

701.2.3 Coarse Gravel: Particles of rock as defined above that will pass a 3 -in. U.S. standard sieve, but will be retained on a 3/4-in. U.S. standard sieve.

701.2.4 Fine Gravel: Particles of rock as defined above that will pass a 3 /4-in. U.S. standard sieve, but will be retained on a No. 4 U.S. standard sieve.

701.3 FINE AGGREGATE (SAND):

Fine Aggregate (Sand) shall be fine granular material produced by the crushing of rock or gravel or naturally produced by disintegration of rock and shall be sufficiently free of organic material, mica, loam, clay, and other deleterious substances to be thoroughly suitable for the purpose for which it is intended. Sand particles are defined as passing a No. 4 U.S. standard sieve and retained on a No. 200 U.S. standard sieve.

End of Section

SECTION 701

~~ROCK, GRAVEL, AND SAND~~
AGGREGATE

701.1 GENERAL:

The ~~following specifications set forth the~~ definitions ~~and requirements~~ for coarse and fine aggregates ~~acceptable for use as defined below. These definitions~~ are per ASTM D-2487. ~~crushed rock, gravel, sand, and quarry stone. Samplings and sieve analysis shall be performed in accordance with ASTM D-75 and ASTM C-136. Sand equivalents shall be determined in accordance with AASHTO T-176. The liquid limit and plasticity index shall be determined in accordance with AASHTO T-89 and T-90.~~ Material property requirements for specific uses are listed in the applicable MAG section.

701.2 ~~CRUSHED ROCK AND GRAVEL~~COARSE AGGREGATE:

~~Rock and gravel~~Coarse Aggregate shall be clean, hard, sound, durable, uniform in quality, and free of any detrimental quantity of soft, friable, thin elongated, or laminated pieces, disintegrated material, organic matter, oil, alkali, or other deleterious substance. Aggregate sources shall include but not be limited to alluvial deposits, terrace aggregates, quarried stone, or other suitable sources including recycled products as approved by the Eengineer. ~~Further c~~Classification shall be made by size as noted below.

~~The loss by abrasion in the Los Angeles abrasion machine, determined as prescribed in ASTM C-131, Grading A, shall not exceed 10 percent, by weight, after 100 revolutions nor 40 percent after 500 revolutions.~~

701.2.1 ~~Crushed Rock~~Boulders: Particles of rock as defined above that will not pass a 12-in. square opening. ~~Crushed rock shall consist of the product obtained by crushing rock, stone, or gravel so that at least 50 percent by weight of aggregate retained on the No. 4 sieve for 3/4 inch or larger maximum sizes, and 50 percent retained on the No. 8 sieve for maximum sizes less than 3/4 inch shall consist of particles which have at least one rough, angular surface produced by crushing. All material that will pass a grizzly with bars spaced 15 inches apart, clear opening, shall be crushed when producing from the Contracting Agency's source.~~

~~The gradation of crushed rock shall comply with ASTM D-448.~~

701.2.2 ~~Gravel~~Cobbles: ~~:~~ Particles of rock as defined above that will pass a 12-in. square opening, but will be retained on a 3-in. square opening.~~Material designated herein as gravel shall be composed entirely of particles that are either fully or partially rounded and water-worn. Crushed rock obtained by crushing rock which exceeds ASTM D-448 maximum gradation sizes may be combined provided it is uniformly distributed throughout and blended with the gravel. The quality and gradation requirements shall be as stated in this specification.~~

701.2.3 Coarse Gravel: Particles of rock as defined above that will pass a 3-in. U.S. standard sieve, but will be retained on a 3/4-in. U.S. standard sieve.

701.2.4 Fine Gravel: Particles of rock as defined above that will pass a 3/4-in. U.S. standard sieve, but will be retained on a No. 4 U.S. standard sieve.

701.3 FINE AGGREGATE (SAND):

Fine Aggregate (Sand)~~Sand~~ shall be fine granular material produced by the crushing of rock or gravel or naturally produced by disintegration of rock and shall be sufficiently free of organic material, mica, loam, clay, and other deleterious substances to be thoroughly suitable for the purpose for which it is intended. Sand particles are defined as ~~will~~ passing a No. 4 U.S. standard sieve and ~~be~~ retained on a No. 200 U.S. standard sieve.

701.3.1 Sand for Asphalt Concrete Pavement: Sand for asphalt concrete pavement shall comply with AASHTO M-29 except that grading requirements shall be deleted and have a minimum sand equivalent of not less than 50 and shall be non-plastic when tested in accordance with AASHTO T-89 and T-90.

701.3.2 Sand for Mortar and Plaster: It shall be thoroughly and uniformly washed and shall be entirely free from oil and deleterious substances.

The average value of sand equivalent determined on 3 successive samples shall not be less than 70. No individual sample shall have a sand equivalent less than 65.

The size and grading of sand to be used in mortar, and plaster shall be such as to conform with the requirements specified as follows:

Mortar: ASTM C-144

Plaster: ASTM C-35

701.3.3 Aggregate for Portland Cement Concrete: Coarse and fine aggregate shall conform to the applicable requirements of ASTM C-33.
Coarse aggregate grading requirements shall conform to the appropriate rock size designation in the Grading Requirements for Coarse Aggregate Table. Fine aggregate grading requirements shall conform to the Fine Aggregate Grading section.

The average value of 3 successive sand equivalent samples shall not be less than 70 when tested in accordance with AASHTO T-176. No individual sample shall have a sand equivalent less than 65.

The loss by abrasion in the Los Angeles abrasion machine, determined as prescribed in ASTM C-131, Grading A, shall not exceed 10 percent, by weight, after 100 revolutions nor 40 percent after 500 revolutions.

701.3.4 Aggregate for Masonry Grout: The size and grading of the fine or coarse aggregate to be used in masonry grout shall conform to ASTM C-404.

701.3.5 Aggregate for Controlled Low Strength Material: Coarse aggregate shall conform to ASTM C-33 grading size No. 57. The size and gradation of fine aggregates (sand) shall conform to ASTM C-33.

701.4 QUARRY STONE:

701.4.1 General: Quarry stone shall be angular, sound, durable, hard, resistant to abrasion; free from laminations, weak cleavages, and undesirable weathering, leaching, exfoliation tendencies, and slaking; and of such character that it will not disintegrate from the action of air, water, or the conditions to be met in handling and placing. Stone shall be clean and free from deleterious impurities, including alkali, earth, clay, refuse, and adherent coatings. Suitable tests and/or service records will be used to determine the acceptability of the stone. Tests to which the material may be subjected include petrographic analysis, X-ray diffraction, specific gravity, absorption, abrasion, rock drop, soundness, wetting and drying, and such other tests as may be considered necessary to demonstrate to the Engineer that the materials are acceptable for use in the work. In connection therewith, the Contractor shall notify the Engineer in writing at least 60 days prior to use of the intended sources of quarry stone.

701.4.2 Test Requirements: Quarry stone shall meet the following requirements except as may be otherwise provided on the plans and in the special provisions:

(A) Apparent specific gravity: 2.65 minimum.

Comment [DR1]: Is taken care of in 710

Comment [DR2]: Would have to be included in section 776 if deleted.

Comment [DR3]: Would have to be included in section 725.3 if deleted.

Comment [DR4]: Would have to be included in section 776 if deleted.

Comment [DR5]: Would have to be included in section 728 if deleted.

~~(B) Breakdown:~~

~~Rock drop breakdown: 5 percent maximum~~

~~Abrasion breakdown at 1000 revolutions: 40 percent maximum~~

~~Breakdown after 10 cycles of wetting and drying: 5 percent maximum~~

~~Solubility in water, breakdown, or softening: None~~

~~**701.4.3 Test Methods:** Unless otherwise specified in the special provisions or indicated on the plans, test methods for quarry stone shall be as follows:~~

~~(A) Apparent specific gravity per ASTM C-127.~~

~~(B) Abrasion characteristics to be determined by either Rock Drop Test or Los Angeles Rattler, ASTM C-131, as required on the plans or the special provisions.~~

~~(1) Standard Rock Drop Test. Tests shall be made on groups of 5 accurately weighed sizes of rocks: No. 1, ranging from 75 to 100 lbs.; No. 2, 100 to 125 lbs.; No. 3, 125 to 150 lbs.; No. 4, 150 to 175 lbs.; No. 5, 175 to 225 lbs.~~

~~Revised 2010~~
~~Each rock of the 5 sizes shall be dropped 3 times on the group of the other 4, in an enclosure, from successive heights of 10, 15, and 18 feet. The enclosure shall have a flexible medium weight galvanized iron floor or equivalent, set on a solid foundation.~~

~~Order of dropping shall be Nos. 3, 2, 4, 1, 5. All rock passing a 3 inch square mesh screen after test shall be weighed and recorded~~
~~as a percentage of the total initial weight of the 5 rocks.~~
~~(2) Los Angeles abrasion machine, per ASTM C-131, Grading B.~~

~~(C) Wetting and drying. The stone shall be crushed, screened, and 1000 or 1500 grams of the 3/4 inch to 3/8 inch fraction taken for the test.~~

~~The crushed and graded stone shall be submerged in water for 18 hours at room temperature, after which the sample shall be drained and oven-dried at 140°F. When dry, the sample shall be cooled to room temperature. This would complete one cycle.~~

~~The percent loss shall be determined by screening the tested sample on a No. 4 sieve and shall be computed as follows:~~

$$\frac{\textit{100 x Weight of Materials Passing No. 4 Sieve}}{\textbf{Total Weight of Sample}} = \textit{\% Loss}$$

~~(D) Accelerated water breakdown and solubility test. Air-dry samples of representative stone weighing approximately 1 lb. each shall be immersed for 8 hours at 140°F., in distilled water, local tap water, or 3.5 percent sodium chloride solution.~~

End of Section

Case 11-30

DATE: July 13, 2011

TO: MAG Specification and Details Committee Members

FROM: Brian Gallimore, Materials Working Group/AGC

RE: Section 702 – Base Material

PURPOSE: Moved all ABC material to 310 section

REVISIONS: a) Removed AB order of preference

SECTION 702

BASE MATERIALS

702.1 GENERAL:

Base materials shall consist of appropriately sized aggregate as defined in section 701, or other approved inert materials of similar characteristics, including recycled material, and materials that have been treated for plasticity index mitigation. Base materials shall be clean and free from vegetable matter and other deleterious substances. The Contractor shall notify the Engineer, in writing, at least 10 days prior to use of the material unless the material is currently acceptable for use as determined by the Engineer.

702.1.1 Aggregate base course shall be used primarily in roadway applications or where otherwise specified by project special provisions.

702.1.2 Select material shall be primarily used, but not limited to applicable structure and pipe backfill installations, shoulders, turnouts, driveways, and tapers or where otherwise specified by project special provisions.

702.2.1 The base material shall meet the physical properties listed in Table 702-2.

Table 702-1			
Sieve Analysis Test Methods AASHTO T-27, T-11			
Sieve Size	Accumulative Percentage Passing Sieve, by Weight		
	Select Material		Aggregate Base Course
	Type A	Type B	
3 in.	100	- -	- -
1-1/2 in.	- -	100	100
1 in.	- -	- -	90 – 100
No. 4	30 - 75	30 - 70	38 - 65
No. 8	20 - 60	20 - 60	25 – 60
No. 30	10 - 40	10 - 40	10 – 40
No. 200	0 - 12	0 - 12	3 – 12
Plasticity Index Test Methods AASHTO T-89 Method A, T-90, T146 Method A			
Maximum allowable value	5	5	5
Fractured Face Test Method ARIZ 212, One Face			
Minimum required value	30	30	30
Resistance to Degradation Test Method AASHTO T-96			
Maximum allowable value at 100 revolutions	10	10	10
Maximum allowable value at 500 revolutions	40	40	40

702.2.2: Base material that does not meet Table 702-2 properties may be approved, at the Engineer's discretion, if the R-Value is a minimum of 70 when determined by test method AASHTO T-190.

End of Section

SECTION 702

BASE MATERIALS

702.1 GENERAL:

~~Materials for use as aggregate base shall be classified in the order of preference as follows:~~ Base materials shall consist of appropriately sized aggregate as defined in section 701, or other approved inert materials of similar characteristics, including recycled material, and materials that have been treated for plasticity index mitigation. Base materials shall be clean and free from vegetable matter and other deleterious substances. The Contractor shall notify the Engineer, in writing, at least 10 days prior to use of the material unless the material is currently acceptable for use as determined by the Engineer.

~~(A) Crushed Aggregate.~~

~~(B) Processed Natural Material.~~

~~(C) Processed Steel Slag.~~

~~(D) Decomposed Granite.~~

~~When base material without further qualification is specified, the Contractor shall supply crushed aggregate. When a particular classification of base material is specified, the Contractor may substitute any higher classification of base material for the specified classification.~~

702.1.1 Aggregate base course ~~material~~ shall be used primarily in roadway applications ~~except~~ or where otherwise specified by project special provisions. ~~Aggregate base shall conform to the requirements listed below.~~

702.1.2 Select material shall be primarily used, but not limited to applicable structure and pipe backfill installations, shoulders, turnouts, driveways, and tapers or where otherwise specified by project special provisions. ~~Select material shall meet the requirements listed below.~~

~~Except where base materials are being obtained from a previously approved source, the Contractor shall give the Engineer 10 days advance notice, in writing, of the source of the base material he intends to use in order to allow sufficient time to perform the necessary tests.~~

~~702.2 CRUSHED AGGREGATE~~PHYSICAL PROPERTIES~~:~~

~~Crushed aggregate shall consist of crushed rock or crushed gravel or a combination thereof as defined in Section 701.~~

~~**702.2.1 Soundness**~~**Abrasion:** ~~The percentage of wear of crushed aggregate to be used as base will be determined as in Section 701, except that~~using ~~Grading B of ASTM C-131,~~ grading B ~~shall be used. The percentage of wear of the material shall not exceed 40 after 500 revolutions.~~

Comment [DR6]: Included in table?

~~702.2.2 **Angularity:** The amount of coarse aggregate particles retained n the No. 4 sieve shall be a minimum of 50% as determined in accordance with test method Ariz 212.~~

Comment [DR7]: Included in table?

702.2.~~2~~.1~~3~~. ~~Grading:~~ ~~-~~The ~~aggregate~~ base material shall ~~be well graded when tested in accordance with ASTM C-136 and C-117. The percentage composition by weight shall be within Table 702-1.~~ meet the physical properties listed in Table 702-2.

Table 702-1~~2~~			
Sieve Analysis Test Methods AASHTO T-27, T-11			
Sieve Size	Accumulative Percentage Passing Sieve, by Weight		
	Select Material		Aggregate Base Course
	Type A	Type B	
3 in.	100	- -	- -
1-1/2 in.	- -	100	100
1 in.	- -	- -	90 – 100
No. 4	30 - 75	30 - 70	38 - 65
No. 8	20 - 60	20 - 60	25 – 60
No. 30	10 - 40	10 - 40	10 – 40
No. 200	0 - 12	0 - 12	3 – 12
Plasticity Index Test Methods AASHTO T-89 Method A, T-90, T146 Method A			
Maximum allowable value	5	5	5
Fractured Face Test Method ARIZ 212, One Face			
Minimum required value	30	30	30~~50~~
Resistance to Degradation Test Method AASHTO T-96			
Maximum allowable value at 100 revolutions	10	10	10
Maximum allowable value at 500 revolutions	40	40	40

~~Table 702-1~~

~~CRUSHED AGGREGATE GRADATION~~

~~Percentage by Weight Passing Sieve~~

~~Sieve Sizes (Square Openings)~~	~~Select Material~~ ~~Type A~~	~~Type B~~	~~Aggregate Base~~
~~3"~~	~~100~~		
~~1 ½"~~		~~100~~	
~~1 ¼"~~			~~100~~
~~No. 4~~	~~30-75~~	~~30-70~~	~~38-65~~
~~No. 8~~	~~20-60~~	~~20-60~~	~~25-60~~
~~No. 30~~	~~10-40~~	~~10-40~~	~~10-40~~
~~No. 200~~	~~0-12~~	~~0-12~~	~~3-12~~

702.2.2: Base material that does not meet Table 702-2 properties may be approved, at the Engineer's discretion, if the R-Value is a minimum of 70 when determined by test method AASHTO T-190.

~~**702.2.3 Plasticity Index:** Unless otherwise noted, the Plasticity Index as tested in accordance with AASHTO T-146 Method A (Wet Preparation), T-89 and T-90 shall not be more than 5.~~

Comment [DR8]: Table to be re-written by Mike Whitman

~~**702.3 PROCESSED NATURAL MATERIAL:**~~

~~**702.3.1 General:** Processed natural material shall consist of hard, durable fragments of stone or gravel and a filler of sand or other finely divided mineral matter. It shall be free from an excess of soft or disintegrated pieces, alkali, adobe, vegetable matter, loam, or other deleterious substances.~~

~~**702.3.2 Physical Requirements:** When sampled and tested in accordance with standard test methods, the aggregate shall meet the following requirements:~~

~~(A) Percentage of Wear: When tested in accordance with ASTM C-131, the percentage of wear shall not exceed 40 percent after 500 revolutions.~~

~~(B) Plasticity Index: When tested in accordance with AASHTO T-146 Method A (Wet Preparation), T-89 and T-90, the plasticity index shall not be more than 5.~~

~~(C) Liquid Limit: When tested in accordance with AASHTO T-89, the liquid limit shall not be more than 25 percent.~~

~~**702.3.3 Crushed Material:** Crushed material is not required, but may be incorporated in the finished product.~~

~~**702.3.4 Grading:** The aggregate shall conform to the sieve analysis in this specification except that the least dimension of the maximum particle size shall not exceed 2/3 of the compacted thickness of the specified lift being placed.~~

~~**702.4 DECOMPOSED GRANITE:**~~

~~Decomposed granite shall be any granitoid igneous rock which has been weathered in place and which has as principal constituents granular fragments of quartz and feldspar. It may also contain fragments of granitic rock not yet broken down into the component minerals. This material shall remain stable when saturated with water. Particles larger than 3 inches, which will not be broken in the process of rolling and tamping during construction, shall not be used.~~

SECTION ~~701~~703

~~Decomposed granite shall conform to the following requirements:~~

~~(A) When tested in accordance with this specification, not more than 20 percent shall pass the No. 200 mesh sieve.~~

~~(B) The P.I. of material passing the No. 200 sieve prior to testing shall not be less than 3 nor greater than 10. The Plasticity Index shall be tested in accordance with AASHTO T-146 Method A (Wet Preparation), T-89 and T-90.~~

~~**702.4.1 Preparation of Test Specimens:** A quantity of sufficient size to have a dry weight of 15 pounds shall be selected and dried to constant weight at a temperature between 215°F. and 230°F. Fifteen pounds of this material shall then be subjected to 500 revolutions in a Los Angeles abrasion machine, as described in Section 701, except that nothing shall be placed in the drum other than the material to be tested.~~

~~The material that has been subjected to the breakdown shall be tested in accordance with ASTM C-117 to determine the percentage of material finer than a No. 200 mesh sieve by washing.~~

End of Section

Case 11-31

DATE: July 13, 2011

TO: MAG Specification and Details Committee Members

FROM: Brian Gallimore, Materials Working Group/AGC

RE: Section 703 – Rip Rap

PURPOSE: Defined properties of material. Consolidated other section references to rip rap.

REVISIONS:
a) Define new section number
b) Indicate proper aggregate size
c) Specify testing methods

SECTION 703

RIPRAP

703.1 ~~STONE:~~ GENERAL:

Aggregate for grouted and ungrouted riprap shall meet the requirements of Section 703.2 unless otherwise stated in the project specifications. . Aggregate shall be sound and resistant to degradation. Service records may be used to determine the acceptability of the stone. The Engineer may require additional testing to approve the material source. . The Contractor shall notify the Engineer, in writing, at least 10 days prior to use of the material unless the material is currently acceptable for use as determined by the Engineer.

703.2 PHYSICAL PROPERTIES:

(A) The maximum aggregate size shall be 150% of the indicated D_{50} size and the minimum aggregate size shall be 50% of the indicated D_{50} size.
(B) Aggregate shall be not exceed 3:1 ratio for flat and/or elongated pieces when determined by test method ASTM D-4791.
(C) Apparent specific gravity shall be a minimum 2.65 when determined by test method AASHTO T-85.
(D) Resistance to degradation shall be a maximum of 40 percent loss when determined by test method ASTM C-535 at 1000 revolutions.

End of Section

SECTION ~~701~~703

RIPRAP

703.1 ~~STONE:~~ GENERAL:

~~Stone~~ Aggregate for ~~plain and~~ grouted and ungrouted riprap shall meet the requirements of Section ~~701.4~~703.2 unless otherwise stated in the project specifications. ~~3~~. ~~Stone shall be angular, rounded stone shall only be allowed when specified. Flat or needle shapes will not be acceptable unless the thickness of the piece is more than 1/3 the length.~~ Stone Aggregate shall be sound and ~~, durable, hard,~~ resistant to degradation. ~~abrasion; free from laminations, weak cleavages, and undesirable weathering, leaching, exfoliation tendencies, and slaking; and of such character that it will not disintegrate from the action of air, water, or the conditions to be met in handling and placing. Stone shall be clean and free from deleterious impurities, including alkali, earth, clay, refuse, and adherent coatings. Suitable tests and/or s~~ Service records ~~will~~ may be used to determine the acceptability of the stone. ~~Tests to which the material may be subjected include petrographic analysis, X-ray diffraction, specific gravity, absorption, abrasion, rock drop, soundness, wetting and drying, and such other tests as may be considered necessary to demonstrate to t~~ The Engineer may require additional testing to approve the material source. ~~that the materials are acceptable for use in the work. In connection therewith, the Contractor shall notify the Engineer in writing at least 60 days prior to use of the intended sources of quarry stone~~. The Contractor shall notify the Engineer, in writing, at least 10 days prior to use of the material unless the material is currently acceptable for use as determined by the Engineer.

~~Stone shall be color-matched with adjacent landscape aggregate if specified on the plans or in the special provisions.~~

703.2 ~~SIZE OF STONE:~~ PHYSICAL PROPERTIES:

(A) ~~Unless otherwise indicated t~~ The maximum ~~stone~~aggregate size shall be 150% of the indicated D_{50} size and the minimum ~~stone~~ aggregate size shall be 50% of the indicated D_{50} size.
(B) Aggregate shall be not exceed 3:1 ratio for flat and/or elongated pieces when determined by test method ASTM D-4791.
(C) Apparent specific gravity shall be a minimum 2.65 when determined by test method AASHTO T-85.
(D) Resistance to degradation shall be a maximum of 40 percent loss when determined by test method ASTM C-535 at 1000 revolutions.

~~**703.3 Test Requirements:** Riprap shall meet the following requirements except as may be otherwise provided on the plans and in the special provisions:~~

~~(A) Apparent specific gravity: 2.65 minimum, as determined by ASTM C-127.~~

~~(B) Breakdown~~Abrasion: ~~Abrasion characteristics to be determined by either Rock Drop Test or Los Angeles Rattler, ASTM C-131, as required on the plans or the special provisions.~~

~~(1) Rock drop breakdown shall be 5 percent maximum when tested as listed below.~~

~~Standard Rock Drop Test. Tests shall be made on groups of 5 accurately weighed sizes of rocks: No. 1, ranging from 75 to 100 lbs.; No. 2, 100 to 125 lbs.; No. 3, 125 to 150 lbs.; No. 4, 150 to 175 lbs.; No. 5, 175 to 225 lbs.~~

~~Each rock of the 5 sizes shall be dropped 3 times on the group of the other 4, in an enclosure, from successive heights of 10, 15, and 18 feet. The enclosure shall have a flexible medium weight galvanized iron floor or equivalent, set on a solid foundation.~~

~~Order of dropping shall be Nos. 3, 2, 4, 1, 5. All rock passing a 3 inch square mesh screen after test shall be weighed and recorded as a percentage of the total initial weight of the 5 rocks.~~
~~Rock drop breakdown: 5 percent maximum~~

(2) Los Angeles abrasion shall be 40 percent maximum at 1000 revolutions when tested in accordance with ASTM C-535.

Abrasion breakdown at 1000 revolutions: 40 percent maximum

(C) Wetting and Drying: The breakdown after 10 cycles of wetting and drying shall be 5 percent maximum when tested and calculated as detailed below.

Wetting and drying. The stone shall be crushed, screened, and 1000 or 1500 grams of the 3/4 inch to 3/8 inch fraction taken for the test.

The crushed and graded stone shall be submerged in water for 18 hours at room temperature, after which the sample shall be drained and oven-dried at 140°F. When dry, the sample shall be cooled to room temperature. This would complete one cycle.

The percent loss shall be determined by screening the tested sample on a No. 4 sieve and shall be computed as follows:

$$\frac{100 \times \text{Weight of Materials Passing No. 4 Sieve}}{\text{Total Weight of Sample}} = \%\ \text{Loss}$$

Breakdown after 10 cycles of wetting and drying: 5 percent maximum

(D) Solubility in water, breakdown, or softening: Test samples shall exhibit no change when subjected to the accelerated water breakdown and solubility test. To test, air-dry samples of representative stone weighing approximately 1 lb. each, and immerse for 8 hours at 140°F., in distilled water, local tap water, or 3.5 percent sodium chloride solution.

None

701.4.3 Test Methods: Unless otherwise specified in the special provisions or indicated on the plans, test methods for quarry stone shall be as follows:
(A) Apparent specific gravity per ASTM C-127.

(B) Abrasion characteristics to be determined by either Rock Drop Test or Los Angeles Rattler, ASTM C-131, as required on the plans or the special provisions.

(1) Standard Rock Drop Test. Tests shall be made on groups of 5 accurately weighed sizes of rocks: No. 1, ranging from 75 to 100 lbs.; No. 2, 100 to 125 lbs.; No. 3, 125 to 150 lbs.; No. 4, 150 to 175 lbs.; No. 5, 175 to 225 lbs.

Each rock of the 5 sizes shall be dropped 3 times on the group of the other 4, in an enclosure, from successive heights of 10, 15, and 18 feet. The enclosure shall have a flexible medium weight galvanized iron floor or equivalent, set on a solid foundation.

Order of dropping shall be Nos. 3, 2, 4, 1, 5. All rock passing a 3 inch square mesh screen after test shall be weighed and recordedas a percentage of the total initial weight of the 5 rocks.
(2) Los Angeles abrasion machine, per ASTM C-131, Grading B.

(C) Wetting and drying. The stone shall be crushed, screened, and 1000 or 1500 grams of the 3/4 inch to 3/8 inch fraction taken for the test.

~~The crushed and graded stone shall be submerged in water for 18 hours at room temperature, after which the sample shall be drained and oven-dried at 140°F. When dry, the sample shall be cooled to room temperature. This would complete one cycle.~~

~~The percent loss shall be determined by screening the tested sample on a No. 4 sieve and shall be computed as follows:~~

$$\frac{\textit{100 x Weight of Materials Passing No. 4 Sieve}}{\textbf{Total Weight of Sample}} = \textit{\% Loss}$$

~~(D) Accelerated water breakdown and solubility test. Air-dry samples of representative stone weighing approximately 1 lb. each shall be immersed for 8 hours at 140°F., in distilled water, local tap water, or 3.5 percent sodium chloride solution.~~

Comment [DR9]: Changes pulled from section 701.4 and re-formatted. MAG 220.2 refers to 703 for riprap materials properties, and 703 formerly referred to 701.4 which has been deleted.

End of Section

Case 11-32

DATE: July 13, 2011

TO: MAG Specification and Details Committee Members

FROM: Brian Gallimore, Materials Working Group/AGC

RE: Section 309 – Lime Slurry Stabilizing

PURPOSE: Section 309 needed to be modified to include the use of hydrated lime and not just be a slurry spec. Allow the spec to be used for soil modifications.

REVISIONS:
a) Revise title to include soil modification
b) Add mix design criteria
c) Add additional testing procedures
d) Specify equipment to be used to spread material more accurately
e) Be non-specific on compaction equipment
f) Payment for lime materials

SECTION 309

LIME ~~SLURRY~~ STABILIZATION OR MODIFICATION OF SUBGRADE

309.1 DESCRIPTION:

This section shall consist of constructing a mixture of soil, lime and water for the stabilization or modification of subgrade soils. ~~or base materials.~~ The work shall be performed in conformity with the lines, grades thickness, and typical cross sections shown on the plans.

Lime Stabilization involves improving soil conditions as defined within this specification. Lime Modification can be allowed by the Engineer in the event only limited soil improvement is required.

309.2 MATERIALS:

309.2.1 Soil or Subgrade: For Lime Stabilization applications, t~~T~~he soil or subgrade material used for this work shall consist of materials on the site or imported and shall be free of roots, sod, weeds and stones larger than 3 inches and have a Plasticity Index (PI) greater than 10, when tested in accordance with AASHTO T-89 & T-90. For Lime Modification applications, the allowable soil or subgrade properties will be determined by the Engineer.

309.2.2 Quicklime and Hydrated Lime: Lime used to manufacture the commercial lime slurry specified herein, shall be either quick lime or hydrated lime and shall conform to the requirements of ASTM C-977. ~~Lime may only be used in the production of a lime slurry. The direct use of dry hydrated lime or quicklime to the soil material is strictly prohibited.~~ All lime shall come from a single source. If a source change is requested, a new mix design shall be submitted using lime from the proposed new source. The new design must be approved by the Engineer prior to use.

309.2.3 Commercial Lime Slurry: Commercial lime slurry shall be a pumpable suspension of solids in water. The water or liquid portion of the slurry shall not contain dissolved material in sufficient quantity naturally injurious or objectionable for the purpose intended. The solids portion of the mixture, when considered on the basis of solids content, shall consist principally of hydrated lime of a quality and fineness sufficient to meet the following requirements as to chemical composition and residue.

(A) Chemical Composition: The solids content of the lime slurry shall consist of a minimum of 90% by weight, of calcium and magnesium oxides (Ca0 and Mg0), as determined by ASTM C-25.

(B) Residue: The percent by weight of residue retained in the solids content of lime slurry shall conform to the following requirements:

Residue retained on a No. 6 sieve	Max.	0.2%
Residue retained on a No. 30 sieve	Max	4.0%

(C) Grade: Commercial lime slurry shall conform to a dry solids content as approved by the Engineer.

A certificate of compliance and a field summary of lime slurry produced shall be provided to the Engineer for each load of slurry.

309.2.4 Water: Water used for mixing or curing shall be reasonable clean and free of oil, salt, acid, alkali, sugar, vegetable, or other substances injurious to the finished product. Water shall be tested in accordance with and shall meet the suggested requirements of AASHTO T-26. Water known to be of potable quality may be used without test.

309.3 COMPOSITION:

309.3.1 Lime~~ Slurry~~: Lime ~~slurry~~ shall be applied at the mix design rate for the depth of subgrade stabilization or modification shown on the plans or requested by the Engineer.

309.3.2 Mix Design: Before commencing lime treatment work, the Contractor shall submit for approval by the Engineer, a proposed mix design. The proposed mix design shall be prepared by a testing laboratory under the direction and control of a registered Professional Engineer. The mix design shall be determined using the soils or subgrade material to be stabilized or modified and lime from the proposed supplier and shall determine the following:

(a) Percent of lime and rate of application of quicklime or lime slurry in the treated soil or subgrade material to meet the design specifications.
(b) Optimum water content during mixing, curing and compaction.
(c) Gradation of in-situ mixture after treatment.
(d) Additional mixing or equipment requirements.
(e) Sulfate content. The sulfate content of the subgrade soil shall be determined by ARIZ 733, AASHTO T290, or ASTM C1580. This result will be reported in the design. The sulfate content will allow the mix designer to recommend the appropriate mellowing time.
(f~~e~~) Mellowing time requirements to provide the contractor with the appropriate time frames for the lime reaction with the soil to be effective.~~, if needed.~~

For Stabilization applications, ~~T~~the mix design shall comply with the following requirements:
(a) pH: Minimum 12.4 after compaction of initial mixing with lime at ambient temperature, in accordance with Eades-Grimm pH test method (ASTM C 977 APPENDIX or ASTM D6276).
(b) Plasticity Index: Less than 3, per AASHTO T-89 & T-90.
(c) Swell Potential: ~~One (1) percent or less vertical expansion of an air dried soil when inundated with water and allowed to swell at a confined pressure of 60 psf.~~Maximum expansive potential (%) of 1.0. The maximum expansive potential shall be determined on a sample compacted to approximately 95 percent of the ASTM D698 maximum dry density at approximately 2% below optimum moisture content. The sample should be confined under a 100 psf surcharge and submerged/inundated.
(d) Hydrated Lime Content: The design engineer shall ~~specify~~designate the m~~M~~inimum ~~5.0~~ percentage of lime by dry weight of the combined lime/soil mixture to ~~accomplish~~satisfy the criteria above. The percentage of ~~cement~~lime specified shall ~~also~~ be sufficient to ~~overcome~~allow for expected variations during the mixing process~~, per ASTM D-3155~~.
(e) Unconfined Compressive Strength: Minimum 160 psi in five days curing at 100°F. when tested in accordance with ASTM D-1633 Method A or an alternate compressive strength method approved by the Engineer~~.~~

For Soil Modification purposes only, the mix design shall specify the minimum amount of quicklime or ~~Hydrated~~hydrated lime slurry required to meet the desired improved soil properties.

309.3.3 Tolerance: At final Compaction, the lime and water content for each course of subgrade treatment shall conform to the approved mix design with the following tolerance:

Material	**Tolerance**
Lime	+0.5% of design, (ASTM C-114)
Water	~~+4%, -0% of o~~Optimum to optimum +4%, (ASTM D-698)

309.4 CONSTRUCTION:

309.4.1 General: It is the primary requirement of this specification to secure a completed subgrade containing a uniform lime mixture, free from loose segregated areas, of uniform density and moisture content, well bound for its full depth, and with a smooth surface suitable for placing subsequent courses.

Prior to beginning any lime ~~slurry~~ stabilization or modification, the subgrade shall be constructed and brought to grade and shall be shaped to conform to the typical sections, lines and grades as shown on the plans.

When the design requires treatment to a depth greater than 12 inches, the subgrade soil shall be treated in equal layers. The top layer(s) of soil shall be removed and stockpiled. The lower layer of soil to be treated shall then be treated and allowed to cure in place. After final mixing, the lower layer shall be compacted in maximum 12 inch thick compacted lifts. The stockpiled soil shall then be placed, treated, mixed and compacted in successive maximum 12 inch thick compacted lifts.

309.4.2 Weather Limitation: Lime ~~slurry~~ treated subgrade shall not be constructed if the ~~atmospheric~~ ambient temperature is below 40° F. or when conditions indicate that temperatures may fall below 40° F. within 24 hours.

309.4.3 Equipment: Contractor shall provide all equipment necessary to complete the work including grading and scarifying equipment, a spreader of the lime, ~~slurry (gravity feed spreader, will not be permitted),~~ mixing and pulverizing equipment, sheepsfoot and pneumatic rollers, sprinkling equipment and trucks. Gravity feed or tailgate spreading, defined as not having automatic controls, will not be permitted. The spreader shall demonstrate the ability to maintain a consistent spread rate over variable travel speeds. ~~When using dry hydrate to make slurry, agitators are mandatory in distributor trucks.~~ All equipment used for this work is subject to approval by the Engineer.

309.4.4 Application: Lime ~~slurry~~ shall be spread only on that area where the mixing operation can be completed during the same working day. ~~The application and mixing of lime with the soil shall be accomplished by the methods hereinafter described as Slurry Placing.~~

309.4.4.1 Dry Hydrated Lime or Dry Quicklime Application: Hydrated lime or quicklime shall only be applied by approved spreader trucks equipped with operating dust collectors to minimize dust issues while loading. Additionally, dust control measures must be observed during the spreading and soil mixing of dry lime.

309.4.4.2 Slurry Application: ~~Slurry Placing:~~ Lime slurry shall be mixed in a portable mixing unit and spread with trucks equipped with an approved distribution system as a slurry. Commercial lime slurry shall be applied at the ~~with a~~ lime percentage determined by the mix design. ~~not less than specified herein. The distribution of lime slurry shall be attained by successive passes over a measured section of subgrade until the proper amount of lime has been spread, as determined in the job mix design~~. ~~The rate of application shall be verified using the methods outlined by ASTM D 3155.~~ The contractor shall provide the Engineer with the daily production quantities for the lime slurry.

Thickness: The thickness of the lime ~~slurry~~ treated subgrade shall be determined by visual inspection and/or by depth tests taken at intervals so that each test shall represent no more than 1000 square yards per layer. If more than one layer, the method used to remove material to determine the depth of lime treatment may be by shovel and/or pick, coring or other method approved by the Engineer. Phenolphthalein solution shall be used to detect the presence of lime. When the grade deficiency is more than 1 inch, the Contractor shall correct such areas in a manner satisfactory to the Engineer. Contractor shall replace, at no cost to the Agency, the material where depth tests are taken.

No traffic other than the mixing equipment will be allowed to pass over the spread of lime ~~slurry~~ until after completion of mixing.

The Engineer reserves the right to vary the rate of application of lime from the specified application rates during the progress of construction as necessary to maintain a pH of the lime/soil mixture above 12.0~~4~~ and the desired characteristics of the treated subgrade.

309.4.5 Mixing: The full depth of the treated subgrade shall be mixed with an approved mixing machine. The use of disc plows or blades are strictly prohibited except in areas specified by the engineer. To insure a complete chemical reaction of the lime and soil or subgrade, water shall be used as required to maintain a minimum moisture content 4% above the optimum prior to beginning compaction and held at optimum to +4% of ~~0-4% above~~ optimum during compaction. During the interval of time between application and mixing, lime that has been applied, unmixed and exposed to the open air for 10 hours or more will not be accepted.

After mixing and prior to compaction, clay lumps shall meet the following criteria:

	Percent
Minimum of clay lumps passing 1-1/2 inch sieve	100
Minimum of clay lumps passing No. 4 sieve	60

309.4.6 Compaction: Compaction of the mixture shall begin after final mixing and shall be accomplished in accordance with the design specifications. ~~Sheepsfoot or segmented sheel rollers shall be used during initial compaction. Steel wheel or pneumatic tired rollers shall be used only during final compaction.~~ Areas inaccessible to conventional rolling equipment ~~rollers~~ shall be compacted to the required density by methods approved by the Engineer.

The material shall be aerated or watered as necessary to provide and maintain required moisture content. The field density of the compacted mixture shall be at least 95 percent of the maximum wet density at optimum to + 4% of ~~0-4% above~~ optimum moisture content. A composite of untreated soil or subgrade materials from a minimum of five (5) random locations, per soil type, within the area to be stabilized shall be used to determine the maximum wet density and optimum moisture content in accordance with ASTM D-558. The in-place ~~filed~~ compacted field density shall be determined in accordance with ASTM D-1556, ASTM D-2167 or ASTM D-6938~~2922~~. The adjustment for rock larger than the no. 4 sieve shall be performed in accordance with ARIZ 227c.

After each section is completed, tests will be made by the Engineer. If the material fails to meet the density requirements, it shall be reworked to meet requirements.

If pumping subgrade should become evident at any time prior to paving, the Engineer may require proof rolling with a pneumatic-tire roller or other approved equipment in order to identify the limits of the unacceptable area. The proof rolling will be performed at no additional cost to the Contracting Agency.

All irregularities, depressions, or weak spots which develop shall be corrected immediately by scarifying the areas affected, adding or removing material as required, and reshaping and recompacting. The surface of the course shall be maintained in a smooth condition, free from undulations and ruts, until other work is placed thereupon or the work is accepted. Compaction and finishing shall be done in such a manner as to produce a smooth dense surface free of compaction planes, cracks, ridges or loose materials.

Throughout this entire operation, the shape of the course shall be maintained by blading, and the surface upon completion, shall be smooth and shall conform with the typical section shown on the plans and to the established lines and grades. Should the material, due to any reason or cause, lose the required stability, density, and finish before the next course is placed or the work is accepted, it shall be recompacted and refinished at no cost to the Agency.

309.4.7 Finishing and Curing: After the final layer or course of lime treated subgrade has been compacted, it shall be brought to the required lines and grades in accordance with the plans. The completed section shall then be finished by rolling with a pneumatic or other suitable roller.

~~The final~~Each layer of lime treated subgrade shall be maintained in a moist condition until the next layer of pavement structure is placed. If required, a fog seal for curing, in compliance with MAG S~~s~~ection 333, shall be furnished and applied to the surface of the final layer of the lime stabilized material as soon as possible after the completion of final rolling and before the temperature falls below 40° F. Curing seal shall be applied at a rate between 0.10 and 0.20 gallons per square yard of surface. The exact rate will be determined by the Engineer.

After curing begins, all traffic, except necessary construction equipment shall be kept off the lime stabilized subgrade for a minimum of 7 days or until the final pavement structure layer(s) are placed. As an alternative, the contractor may place a loose lift of aggregate base course over the curing subgrade. The aggregate base course should be kept moist during the curing process.

309.4.8 Maintenance: The Contractor shall maintain, at his/her own expense, the entire lime ~~slurry~~ treated subgrade in good condition from the start of work until all the work has been completed, cured and accepted by the Engineer.

309.5 MEASUREMENT:

The quantity of lime slurry treated soils shall be measured by the square yard, measured in place, treated, compacted, to the proper depth, and accepted.

The quantity of curing seal shall be measured by the ton.

309.6 PAYMENT:

The lime ~~slurry~~ treated soils measured as provided above, will be paid for at the contract price per square yard, which price shall be full compensation for the item complete, as herein described and specified.

The Owner or Engineer reserves the option to pay for the lime separately. Should this option be chosen, the lime treated soils measured as provided above will be paid for at the contract price per square yard which shall include full compensation for the item less lime, as herein described and specified. The Lime materials will be paid for by the contract price per ton based on hydrated lime. If quicklime is used there will be an additional pay factor of 1.3 applied to determine the actual amount of hydrated lime placed.

Payment for curing seal will be by the ton, based on the rate of application as requested by the Engineer.

Case 11-33

DATE: July 13, 2011

TO: MAG Specification and Details Committee Members

FROM: Brian Gallimore, Materials Working Group/AGC

RE: Section 311 - Soil Cement Base Course

PURPOSE: Clarify and update the construction methods of cement treated subgrade

REVISIONS:
a) Clarify title description of cement treated base course to subgrade
b) Spreading of cement
c) Update testing criteria for moisture and density
d) Add thickness deficiency procedure
e) Remove bituminous curing seal for environmental reasons

SECTION 311

PLACEMENT AND CONSTRUCTION OF CEMENT TREATED SUBGRADE~~SOIL CEMENT BASE COURSE~~

311.1 DESCRIPTION:

This item shall consist of a cement treated ~~subgrade~~sub grade ~~base course~~ composed of a mixture of local soil, portland cement, and water compacted at optimum moisture content.

311.2 MATERIALS:

Portland cement and water shall comply with Sections 725 and 225. The soil for the mixture shall consist of the material in the area to be paved. The material shall not contain more than 5 percent gravel or stone retained on a 3 inches sieve. It shall be demonstrated by laboratory tests that the plasticity and strength~~hardening~~ characteristics as defined in Section 311.4.5 of the soil will be adequately modified by the specified cement content.

311.3 EQUIPMENT:

An ample number of machines, combination of machines and equipment shall be provided and used to produce the complete soil cement treated laye~~rbase course r~~ meeting the requirements for soil pulverization, cement distribution, water application, incorporation of materials, compaction, finishing, and for application of the curing material as provided in these specifications.

Mixing shall be accomplished by means of multiple-pass soil-cement mixer, single-pass soil-cement mixer or central plant mixer.

Water may be applied through the mixer or with the water trucks equipped with pressure sprays. Water trucks providing fine fog-type sprays shall be furnished for finishing and curing. Properly adjusted garden type nozzles on a pressure bar may be used to produce fog spray if approved by the Engineer.

Cement spreader shall be a specially constructed device to distribute bulk cement at the specified rate. The spreader shall have the ability to maintain a consistent spread rate over variable travel speeds. ~~uniformly at rate specified either in windrows or on the flat as determined by method of mixing.~~

311.4 CONSTRUCTION METHODS:

Prior to ~~Before undertaking~~ construction, the contractor shall remove all deleterious material, organic material, and particles retained on the 3 inch sieve from the area to be treated. ~~of the soil~~. The soil ~~of the cement base course, the area to be paved~~ shall be brought to a compacted condition, true to line and grade as directed by the Engineer or as shown on the plans. ~~During this process any unsuitable soil or material, including excess material retained on a 3 inches sieve, shall be removed and replaced with acceptable material. The compacted surface shall be at the proper elevation as specified, shown on the plans, or as directed by the Engineer, for the top of the soil cement base. At completion of this phase, the material and surface shall be approved by the Engineer before proceeding with the next step.~~ The compacted soil and surface shall be approved by the Engineer prior to proceeding with mixing.

The material shall be scarified, pulverized, mixed with water and cement, compacted, ~~and~~ finished and cured in lengths permitting the full roadway width to be complete in not more than 4 hours from the time that cement is exposed to water. Such lengths will generally be not less than 600 feet or the length of one City block and preferably more. Where a gutter section exists the material shall be pulled back from the gutter face for the full depth of the course before processing.

SECTION 311

311.4.1 Pulverizing: ~~Before~~ Prior to application of cement, soil to be processed shall be scarified to depth of base. The material ~~should~~ shall be damp at time of scarifying to reduce the dust generation ~~to a minimum~~ and to aid in pulverization. ~~If the soil contains clods, it~~ Soil shall be pulverized until not less than 80 percent, exclusive of gravel or stone, will pass a No. 4 sieve.

311.4.2 Application of Cement: The quantity of cement shall be by weight as a percentage of the dry weight of the soil as determined by the laboratory and/or as directed by the Engineer and shall be applied uniformly on the soil in a manner satisfactory to the Engineer. The allowable deviation in uniformity shall not exceed 10 percent. The entire operation of spreading and mixing shall be conducted in such a manner as will result in a uniform soil cement and water mixture for the full design width and depth.

The percentage of moisture in the soil, at the time of cement application, shall not exceed the quantity that will permit a uniform and intimate mixture of the soil and cement during mixing operations, and it shall not exceed the specified optimum moisture content for the soil cement mixture.

311.4.3 Mixing: Mixing with addition of water as required shall be continued until the product is uniform in color and at optimum moisture content to + 4% of optimum moisture content as determined in accordance with ASTM D-558. Any mixture of soil and cement which has not been compacted and finished shall not remain undisturbed for more than 30 minutes but shall be agitated by remixing.

311.4.4 Optimum Moisture: Optimum moisture requirements and field tests of moisture density shall be determined in accordance with ~~AASHTO T-134, T-191, T-217, or~~ ASTM D-558, ~~D-2922, D-3017~~ and D6938 on representative samples of soil cement mixture obtained from the area being processed. At the time of compaction~~laydown~~, the moisture content shall not be below optimum moisture, and shall be less than that quantity which will cause the base course to become unstable during the compaction and finishing process. Any area which becomes so unstable shall be removed and replaced with new cement stabilized material.

311.4.5 Compressive Strength: Laboratory compressive strength testing of the cement~~ed~~ treated subgrade is required to evaluate the proposed amount of cement and/or verify the compressive strength achieved during construction. Laboratory compressive strength testing shall be done in accordance with ARIZ 241~~a~~.

311.4.6~~5~~ Compaction: After mixing is complete, the mixture shall be carefully placed in a uniform loose depth which will provide a surface true to grade and section when compacted. Unless otherwise directed by the Engineer, initial compaction shall be by means of a tamping, grid, or pneumatic roller. After the tamping roller has partially walked out, pneumatic rollers shall be used. Density of final product shall be not less than 95 percent as determined by ~~AASHTO or~~ ASTM standards as specified above.

SECTION 311

311.4.7~~6~~ Finishing: As compaction nears completion, the surface of the base course shall be shaped to required lines, grades and cross-section. When required, the surface shall be lightly scarified with spike tooth harrows or other approved equipment to remove imprints left by equipment or to prevent slippage planes. During the finishing process the surface shall be kept moist by means of fog-type sprays. Surface finish and final compaction shall be completed in not more than 2 hours from the time the cement is exposed to water~~time of laydown~~. The completed base course shall be true to line, grade, cross-section and shall not vary more than ½ inch in thickness and not more than 1 inch in surface tolerance when tested with a 10 foot straight edge. It shall be free of surface cleavage planes, cracks, or loose material. As a final operation, the surface shall be very lightly scalped with a motor grader, wet with a fog spray and rolled with a pneumatic roller as directed by the Engineer.

311.4.8~~7~~ Thickness Deficiency: ~~When in the opinion of the Engineer there is reason to believe that a deficiency in thickness exists, cores will be taken in the same pattern as that defined in Section 321. If the base has been covered or it is otherwise impractical to correct the deficiency, the corrective measures, listed in Table 310-1 for Type I or II deficiencies, shall be taken by the Contractor at no additional cost to the Contracting Agency.~~The Engineer may choose to have cores obtained to evaluate the thickness of the treated cement stabilized subgrade layer. Should the thickness of the treated layer not meet the project specifications, the Engineer may require the contractor to submit an Engineering Analysis (EA) to address the pavement section. The EA will provide an opinion as to the anticipated performance of the pavement section as a result of the reduced cement treated layer thickness.

311.4.9~~8~~ Curing: ~~After completion of the final finishing process, the soil-cement shall be cured with a bituminous curing seal applied at the end of each construction day. This seal may be either an emulsion or cut-back asphalt applied at a minimum rate of 0.20 gal./sq. yd. The finished soil-cement shall be kept continuously moist until the bituminous cure seal is applied, using fog or gravity bar spray. The spray equipment shall be approved by the Engineer before construction is begun.~~~~The final~~Each layer of cement treated subgrade shall be maintained in a moist condition until the next layer of pavement structure is placed. If required, a fog seal for curing~~,~~ in compliance with MAG Section 333, shall be furnished and applied to the surface of the final layer of the cement stabilized material as soon as possible after completion of final rolling and before the ambient temperature falls below 40º F. Curing seal shall be applied at a rate between 0.10 and 0.20 gallons per square yard of surface. The exact rate shall be determined by the Engineer.

After curing begins, all traffic, except necessary construction equipment shall be kept off the cement stabilized subgrade for a minimum of 7 days or until the final pavement structure layer(s) are placed. As an alternative, the contractor may place a loose lift of aggregate base course over the curing subgrade. The aggregate base course shall be kept moist during the curing process.

311.4.10~~9~~ Construction Joints: At the end of each day's work, a construction joint shall be made transverse to the centerline of the road by cutting back into the work to provide a full depth vertical joint. Except where specifically authorized by the Engineer, no other construction joints will be permitted. Where authorized, such joints shall be full depth vertical joints.

311.4.11~~10~~ Maintenance: The Contractor shall maintain the surface until it has been covered with the designated bituminous wearing course. In case it is necessary to replace any soil cement, it shall be for the full depth. No skin patches or soil cement will be permitted. Minor surface pits may be filled with compacted bituminous surfacing, if authorized by the Engineer. Immediately prior to the placing of the bituminous wearing course, the surface shall be broomed to removed all loosened material from the surface.

311.5 MEASUREMENT:

SECTION 311

Measurement of soil cement will be the number of square yards constructed to the required depth, completed and accepted.

Measurement of portland cement will be the number of tons of cement mixed with local soil.

311.6 PAYMENT:

Payment will be made for the applicable items at the contract unit prices bid in the proposal, and shall constitute full payment for furnishing all material, equipment, tools, labor and incidentals necessary to complete the work and for carrying out the maintenance provisions.

No measurement or payment will be made for any imported earth materials.

End of Section

Case 11-34

DATE: July 13, 2011

TO: MAG Specification and Details Committee Members

FROM: Brian Gallimore, Materials Working Group/AGC

RE: Section 312 - Cement Treated Base

PURPOSE: Section 312 need update testing procedures

REVISIONS:
a) Added provisions for measuring moisture content
b) Updated density testing methods procedures

SECTION 312

CEMENT TREATED BASE

312.1 DESCRIPTION:

Cement treated base shall consist of a combination of base material and portland cement as specified in Section 705.

312.2 GENERAL:

When the mixing of cement treated base in a stationary mixer is required, it will be so specified. Otherwise, cement treated base may be mixed in either a traveling plant or in a stationary plant, at the option of the Contractor.

If the cement treated aggregate is mixed in a central plant, it shall not contain moisture in excess of 1 percent above or below optimum at the time of delivery on the grade. Certain types of transit mixers will not discharge such material unless it is greatly in excess of optimum moisture. Use of such mixers will not be permitted.

If the material is mixed in place, the machine or combination of machines used shall be capable of thoroughly mixing the cement and aggregate, when using the granular material specified, in a single pass. No lift thickness shall exceed 8 inches. If the thickness required is in excess of 8 inches, it shall be mixed in 2 separate lifts of equal thickness.

312.3 CONSTRUCTION METHODS:

Mixing of materials, regardless of the type of mixer used or method employed, shall be continued until the cement and water are evenly distributed throughout the aggregate, and a mixture of uniform appearance is obtained.

The amount of cement used shall conform to requirements of Section 705. Cement delivered in standard sacks from commercial producers will be assumed to weigh 94 pounds per sack and need not be weighed. Bulk cement or fractional sacks of cement shall be weighed.

The amount of water used shall be that required to give optimum moisture content. A portion of the required water may be added to the aggregate prior to the addition of the cement, if approved. Moisture content of the material delivered to the grade shall be checked for moisture content a minimum of four times per shift using AASHTO T-217. Batch adjustments shall be made as necessary to correct for deficiencies.

After spreading, the cement treated base shall be compacted to a density of at least 95 percent of the maximum density as determined by ~~AASHTO T-134, T-191, T-217 or ASTM D-558, D-2922, D-3017~~the mix design. Density testing shall be performed using ~~either AASHTO T-191 or~~ ASTM D-2922 and D-3017.

Compressive strength of the cement treated base material shall be tested a minimum of twice per shift using Arizona ~~test method~~ARIZ 241. Strength specimens shall be compacted on site and protected from moisture loss or disturbance by any practical means. Specimens shall be kept in this manner on site for 18-24 hours inside a hard outer shelled container that will protect the specimens from external environmental elements. The specimens shall be carefully transported to the laboratory for moist curing after this initial 18-24 hour cure.

After compaction, the surface of the cement treated base course shall not deviate at any point more than 3/8 inch from the lower edge of a 10-foot straightedge laid parallel to the centerline of the roadway.

A construction joint shall be made at the end of each day's construction by trimming the end of the compacted mixture to a straight vertical plane, normal to the centerline of the roadway and with the vertical edge in thoroughly compacted material.

Cement shall not be added to more material than will be mixed, compacted and sealed the same day. Cement treated base shall not be mixed or placed when either the aggregate or subgrade is frozen. The air temperature shall be at least 40°F. in the shade and rising at the time of mixing.

In areas which are inaccessible to the mixing, spreading or compacting equipment designated herein, other methods and equipment acceptable to the Engineer may be utilized.

The mixed material shall not remain undisturbed on the subgrade for more than 30 minutes and not more than 3 hours shall elapse between the time water is added to the mixture and final compaction is accomplished.

The mixed materials shall be spread for the full width of the base under construction, either by one spreader or by several spreaders operating in a staggered position across the subgrade, unless permission is granted to do part-width construction. Should permission be granted for part-width construction, not more than 30 minutes shall elapse between the times of placing the material in adjacent lanes at any location, and the longitudinal joint against which additional mixed material is to be placed shall be trimmed to a straight vertical plane parallel to the centerline of the roadway. Trimming shall be done in such a manner as to cause the least possible loosening of the compacted base material and to leave no loose material on the subgrade. The material cut away in trimming may be used in the construction of the shoulders or the adjacent lanes if approved, or shall be disposed of in a satisfactory manner.

During mixing, spreading and compacting and until the application of the curing seal, any moisture lost by evaporation shall be replaced by the addition of water by means of a light fog or fine spray.

The mixed base materials shall be covered as soon as possible after final compaction and shall be cured in accordance with this specification.

312.4 TRAVELING PLANT MIXING:

312.4.1 Placing Aggregate: The aggregate to be treated shall be placed on the roadway either as a uniform layer which, when compacted, will produce a base of the depth and width shown on the plans or as one or more windrows which, when spread, will yield a uniform layer which will compact to the prescribed dimensions. If the aggregate is placed in one or more windrows, a windrow sizer will be required. The number and size of the windrows may vary, depending on the width and depth of treatment and on the capacity of the machine, but regardless of size, the windrow shall be uniform in cross-section and shall not be larger than can be handled by the plant.

Care shall be exercised during the placement of the aggregate to prevent segregation of the fine and coarse portion of the aggregate.

312.4.2 Placing Cement: Cement shall be added to the uniform layer or windrow of aggregate by means of mechanized equipment which will spread the cement in correct and uniform quantities. For any section of roadway, the quantity of cement placed by mechanical spreaders shall not deviate more than 10 percent from the computed quantity for the section. When cement is applied to a windrow, the top of the windrow shall be slightly trenched to retain the spread of cement.

If storm winds cause a loss of spread cement, spreading operations shall be halted until such winds subside and, at the first indication of losses, prompt action shall be taken to avoid further losses. If cement losses are deemed excessive, the deficient quantity shall be furnished and added in the proper amount by the Contractor at no additional cost to the Contracting Agency.

312.4.3 Mixing: Mixing shall be accomplished by means of an approved single pass traveling continuous mixing machine, or combination of machines, of the pug or auger type. The machine shall be so constructed that the device for picking up or mixing the aggregate can be controlled and during the mixing operations it shall be set to mix the aggregate, cement and water to the design depth without cutting into or disturbing the subgrade or picking up any material other than that material to be processed. The machine shall be equipped so that water may be introduced at the time of mixing through a metering device which will accurately and uniformly control and measure the amount of water being used.

The cement and aggregate shall be mixed in the machine simultaneously with the adding, through the machine, of the additional amount of water required.

The material shall be spread immediately after mixing, in reasonably close conformity to the lines, grades and dimensions established or shown on the plans.

312.4.4 Stationary Plant Mixing: If the stationary plant method of mixing is employed, the aggregate, cement and water shall be mixed at a central plant using either a batch pug mill type or a continuous type mixer. Dead areas in the mixer, in which the material does not move or is not sufficiently agitated, shall be corrected, either by a reduction in the weight of materials or by other adjustments.

312.4.5 Batch Mixing: If a batch pug mill type mixer is used, the aggregate and cement shall be proportioned by batch weights. Cement shall be weighed on separate scales from the aggregate batching scales.

The weight of the charge in a batch mixer shall not exceed that which will permit complete mixing of all materials. The period of mixing shall not be less than 30 seconds from the time all materials are in the mixer. Water may be proportioned by volume or by weight.

312.4.6 Continuous Mixing: If a continuous type mixer is used, the materials shall be proportioned by volume.

The continuous type mixer shall be equipped with metering devices and feeders which will introduce the cement, aggregate and water into the mixer in the specified proportions. The water pump shall be equipped with a means of varying the rate of delivery. The metering devices and feeders shall be interlocked and so synchronized as to maintain a constant ratio of cement and water to the aggregate.

The rate of feed to a continuous type mixer shall not exceed that which will permit complete mixing of all the material.

312.4.7 Spreading: The treated material shall be transported from the plant to the prepared subgrade in approved equipment.

The surface on which the material is to be placed shall be thoroughly moistened and kept moist, but not excessively wet, until covered by the material.

Plant mixed cement treated base shall be spread by approved spreader boxes or finishing machines. The machines shall be constructed and operated so as to produce a layer of uniform density and cross-section an in sufficient quantity to provide a compacted base reasonably conforming to the lines, grades and cross-sections established or shown on the plans.

312.4.8 Compacting: Initial compaction shall begin immediately after mixing and spreading. Successive passes of compacting equipment shall overlap the previous adjacent pass by at least 25 percent of its width. Following initial compaction and before final compaction, the treated material shall be bladed with a motor grader or a Planning machine to obtain a surface reasonably true to the lines, grades and cross-sections established or shown on the plans. During and immediately following the shaping operations, if required, the Contractor shall lightly scarify the surface with a nail drag or other approved equipment to prevent the formation of surface compaction planes.

Extreme care shall be exercised by the Contractor during the blading operation so that no more material than is necessary is disturbed and so that this operation can be completed as quickly as possible. Material thus cut shall be wasted if so directed. Compaction shall proceed without interruption, except as stated above, until the required degree of compaction is obtained.

312.5 INVERTED SECTION:

Where the cement treated base is to be covered with an aggregate base material to prevent shrinkage crack reflection and overloading of the cement treated base, the minimum thickness of the aggregate base shall be 4 inches, unless otherwise specified in the special provisions. In order to provide for free internal drainage of the aggregate base course overlaying the cement treated material, it shall be non-plastic and the percentage of material passing the No. 200 sieve shall not exceed 8. The cement treatment shall be held back approximately 1 foot from each curb line so

as to permit drainage of any water that may become trapped between the cement treated base material and the bituminous surfacing.

312.6 CURING:

The mixed cement treated base materials shall be covered as soon as possible after final compaction with a bituminous curing seal. Application shall be by means of a pressure distributor in accordance with the requirements of Section 330. The approximate quantity of bituminous material to be used shall be as specified; however, the exact amount will be determined by the Engineer at the time of application.

After the bituminous curing seal has been applied, the cement treated base course shall be kept free of equipment and traffic for a period of at least 7 days or until it will not pick up under traffic. Curing seal shall conform to the requirement of Section 712 or 713 for the type specified.

In lieu of the curing seal, the Contractor may, at his option, keep the surface of the compacted base continuously moist until overlaid with the aggregate base course. The aggregate base or the surfacing, may be placed as soon as the cement treated base has been compacted. The spray equipment on the water truck shall be approved by the Engineer prior to the use of this equipment to spray the soil cement base course. The spray equipment must produce a fine, even spray to prevent washing of the surface of the base course. A cement treated section may be opened to all traffic immediately after placement and compaction of the surfacing.

312.7 DEFICIENCY:

When, in the opinion of the Engineer, there is reason to believe that a deficiency in thickness exists in the cement treated base, cores will be taken in the same pattern as that defined in Section 321. If the base has been covered or it is otherwise impractical to correct the deficiency of ½ inch or more in thickness, the corrective measure listed in Table 310-1 for Type II deficiency shall be taken by the Contractor at no additional cost to the Contracting Agency.

312.8 PAYMENT:

Payment for the portland cement will be made by the tons of cement complete in place.

Payment for base material will be made by the tons of aggregate complete in place including mixing, spreading, and compacting.

No separate payment will be made for curing.

SECTION 705

PORTLAND CEMENT TREATED BASE

705.1 GENERAL:

The cement treated base shall consist of aggregate, cement, and water. Use of other types of materials must be approved by the Engineer. ~~of furnishing all materials in accordance with these specifications. The estimated cement requirement is 3 ½ percent by weight of the dry aggregate~~The cement content shall be sufficient to yield ~~compressive strength of 500 psi plus one percent overdesign after 7 days of curing.~~ . The compressive strength requirement shall be determined by the project specifications. The amount of cement used in the mix design shall be determined by the project specifications.~~The cement shall be Type II, low alkali.~~

705.2 AGGREGATE FOR CEMENT TREATED BASE:

The aggregate for cement treated base shall conform to the requirements of Section 702-2 Aggregate Base Course. ~~701 except the plasticity of the material passing the No. 40 sieve shall not exceed 5 and the grading shall be per Table 705-1.~~

~~**TABLE 705-1**~~	
~~**CEMENT TREATED BASE GRADATION**~~	
~~**Sieve Size**~~	~~**Percentage By Weight Passing Screen**~~
~~1 ½ inches~~	~~100~~
~~No. 4~~	~~40-70~~
~~No. 40~~	~~30 Max.~~
~~No. 200~~	~~38000~~

Comment [DR10]: Table to be re-written by Mike Whitman.

705.3 PORTLAND CEMENT AND WATER:

Portland cement and water shall conform to the requirements of Section 725.

705.4 ~~COMPRESSIVE STRENGTH OF CEMENT TREATED BASE~~ CEMENT TREATED BASE MIX DESIGN:

~~The minimum compressive strength at 7 days shall not be less than 500 psi when tested in accordance with ASTM D-1633.~~A cement treated base mix design incorporating the proposed materials shall be completed prior to the start of work. ~~—~~The mix design shall be performed in accordance with Arizona Department of Transportation test methods ARIZ-220, ARIZ-221, and ARIZ-222. Compressive strength specimens shall be tested in accordance with ARIZ~~riz~~ 241. The final report shall include the following elements: ~~at minimum:~~

1. The source and supplier of the aggregate ~~as well as the virgin aggregate~~ including gradation and plasticity index testing.
2. The source, supplier, and type of cement.
3. The cement content required to meet the project specifications. ~~500 psi plus one percent overdesign strength after 7 days of curing as per Ariz 220.~~ Cement content shall be calculated by the dry weight of the combined aggregate-cement mixture.
4. The optimum moisture and maximum dry density of the proposed blend at the target cement content as determined by Arizona test method 221.

5. The rock corrected optimum moisture and maximum dry density of the proposed blend at the target cement content as determined by Arizona test method 222.
6. A summary of design compressive strength testing including a graph plotting cement content as the x-axis and compressive strength as the y-axis.

~~**705.5 BITUMINOUS MATERIAL FOR CURING SEAL:**~~

~~Bituminous material for curing seal shall conform to the requirements of Sections 712 or 713 for the type specified.~~

SECTION 705

PORTLAND CEMENT TREATED BASE

705.1 GENERAL:

The cement treated base shall consist of aggregate, cement, and water. Use of other types of materials must be approved by the Engineer. The compressive strength requirement shall be determined by the project specifications. The amount of cement used in the mix design shall be determined by the project specifications.

705.2 AGGREGATE FOR CEMENT TREATED BASE:

The aggregate for cement treated base shall conform to the requirements of Section 702-2 Aggregate Base Course.

705.3 PORTLAND CEMENT AND WATER:

Portland cement and water shall conform to the requirements of Section 725.

705.4 CEMENT TREATED BASE MIX DESIGN:

A cement treated base mix design incorporating the proposed materials shall be completed prior to the start of work. The mix design shall be performed in accordance with Arizona Department of Transportation test methods ARIZ-220, ARIZ221, and ARIZ-222. Compressive strength specimens shall be tested in accordance with ARIZ 241. The final report shall include the following elements:

1. The source and supplier of the aggregate including gradation and plasticity index testing.
2. The source, supplier, and type of cement.
3. The cement content required to meet the project specifications. Cement content shall be calculated by the dry weight of the combined aggregate-cement mixture.
4. The optimum moisture and maximum dry density of the proposed blend at the target cement content as determined by Arizona test method 221.
5. The rock corrected optimum moisture and maximum dry density of the proposed blend at the target cement content as determined by Arizona test method 222.
6. A summary of design compressive strength testing including a graph plotting cement content as the x-axis and compressive strength as the y-axis.

Case 11-35

DATE: July 13, 2011

TO: MAG Specification and Details Committee Members

FROM: Brian Gallimore, Materials Working Group/AGC

RE: Section 310-Untreaded Base Course

PURPOSE: Change title to clarify meaning. Addressed construction and evaluation process conflicting.

REVISIONS:
a) Classified compaction guidelines
b) Updated deficiency, corrective action and construction methods

SECTION 310

~~UNTREATED~~ PLACEMENT AND CONSTRUCTION OF AGGREGATE BASE COURSE

310.1 DESCRIPTION:

~~Untreated base, i.e., select or a~~Aggregate base course~~,~~ shall comply with Subsection 702~~.2~~ unless the use of a different type of material is specifically authorized in the special provisions.

310.2 ~~PLACING~~PLACEMENT AND CONSTRUCTION:

The compacted lift thickness shall not exceed 6 inches, unless approved by the Engineer. Based on ~~Aggregate~~ Untreated base ~~course shall be placed in lifts the height of which shall not exceed that which can be effectively compacted depending on~~ the type of material, type of equipment and compaction methods used, the Contractor may propose a greater lift thickness. ~~6 inches or less in compacted thickness may be placednot to exceed 12" in a single layer. Lifts in excess ofand those more than 6 inches in thickness shall be built up in successive layers of approximately equal compacted thickness not to exceed a maximum thickness of 6 inches. . The requirements which follow are applicable to all types of material.~~

After distributing, the aggregate base course material shall first be watered and then ~~immediately~~ graded~~bladed~~ to a uniform layer that will net, after compacting~~rolling~~, the required thickness. ~~If the materials deposited are not uniformly blended together, t~~The grading~~blading~~ operation shall be continued to such extent as may be necessary to minimize~~eliminate~~ segregation. The quantity of water applied shall be that amount which will assure proper compaction resulting in the~~a relative~~ density ~~of not less than 100 percent as determined under Section 301~~as required by Section 310.3.

~~Care shall be exercised in connection with watering operations to avoid wetting the subgrade or any lower base course to detrimental extent.~~

~~Upon completion~~After placement, the aggregate base course surface shall be true, even and uniform conforming to the grade and cross-section specified.

In no case shall the ~~Untreated~~a~~A~~ggregate base course ~~may~~ vary by~~not~~ more than ½ inch above or below required grade. ~~and cross-section.~~

310.3 COMPACTION

The contractor is responsible for providing appropriate equipment and techniques to achieve the compaction results required by this specification. The aggregate base course shall be compacted in lift thicknesses as allowed by Section 310.2.

~~The AASHTO procedures described in the section will be utilized unless the Engineer allows the corresponding ARIZ or ASTM procedure to be substituted.~~ The laboratory maximum dry density and optimum moisture content for the aggregate base course material shall be determined in accordance with ~~one of the following procedures: ARIZ 245, AASHTO T-99, or ASTM D698~~AASHTO T-99. Field 'one-point' maximum dry density and optimum moisture procedures shall only be allowed upon approval of the E~~e~~ngineer.

The in-place density shall be determined in the field by nuclear density testing in accordance with AASHTO T-310 ~~sandcone density testing and/or nuclear density testing. Sandcone density testing shall be performed in accordance with one of the following procedures: ARIZ 238, AASHTO T191, or ASTM D 1556 and/~~or~~.~~ sandcone density testing in accordance with AASHTO T-191~~Nnuclear density testing shall be performed in accordance with ARIZ 235, AASHTO T310, or ASTM D6 938~~. In the event nuclear density testing is selected, a minimum of one sandcone correlation shall be performed for each 10 nuclear density tests.

SECTION 310

A rock correction, to compensate for rock content larger than the #4 or ¾ inch sieves (as required by the laboratory maximum dry density and optimum moisture procedure selected), shall be performed in accordance with ~~one of the following procedures: ARIZ 227, AASHTO T224, or ASTM D4718~~AASHTO T-224. Care should be taken to account for the specific gravity of the oversize particles ~~especially~~particularly if recycled materials are utilized for aggregate base course. The specific gravity shall be determined –in accordance with ~~the one of the following procedures: ARIZ 210, AASHTO T85, or ASTM C127~~AASHTO T-85, as applicable.~~(How can you run C-127 on RAP or Asphalt Millings~~

~~One field density test shall be performed on each lift of aggregate base course.~~ For roadway construction, one field density test shall be performed ~~for~~per lift per ~~each~~ 66~~5~~0 feet per lane ~~width (Is this consistent)~~. For other aggregate base course applications, a minimum of 1 field density test shall be performed for each 800 square yards. ~~More or less frequent testing may be performed at the approval of the Engineer.~~

Unless otherwise noted in the project plans or project specifications, the moisture content of the aggregate base course at the time of compaction shall be the optimum moisture content ~~to~~ +/- ~~2~~3% ~~of optimum moisture content~~.

SECTION 310

The following percent compaction is required:

(A) Below asphalt concrete pavement 100%

(B) Below Portland cement concrete pavement, curb & gutter, attached sidewalk, roadway Shoulders, and other areas of the right-of-way subject to vehicular traffic 95%

(C) ~~Below detached sidewalk or other flatwork~~All other areas not subject to vehicular traffic ~~85~~85~~90~~%

Areas which fail initial ~~field density~~ testing for density and/or moisture content shall be reworked until passing tests for density and/or moisture content are achieved. L~~l~~ower moisture content percentages at the time of field density testing may~~-~~ be allowed if significant time has passed since the time of compaction and the required density has been achieved.

310.4~~3~~ THICKNESS AND/OR PLASTICITY INDEX DEFICIENCY:

When in the opinion of the Engineer there is reason to believe that a deficiency in thickness, or an excess of plasticity exists, measurements or samples will be taken in the same pattern as that defined in Section 321. If the base has been covered or it is otherwise impractical to correct the deficiency, the corrective measures in Table 310-1 shall be taken by the Contractor at no additional cost to the Contracting Agency.

TABLE 310-1

THICKNESS AND PLASTICITY DEFICIENCY

Type	Deficiency	Corrective Measure
I	Less than ½ inch of the required thickness	No corrective measure required.
II	½ inch or more but less than 1inch of the required thickness	~~Place asphalt chip seal using precoated chips in accordance with Section 330 for the full roadway width over the area involved but for not less than 660 feet or one City block in length.~~(1) The contractor may choose to add additional material and rework the grade to meet the specification requirements. ~~An Engineering Analysis (EA) shall be prepared by the contractor to evaluate the expected performance of the reduced aggregate base course layer. The EA may provide mitigation options for the Engineer to consider. If the Engineer accepts the in-place thickness as a result of the EA, a penalty of $1/ton shall be applied to the subject aggregate base coursethe Contractor shall reimburse the Agency for reduced aggregate base course quantities.~~ (2) The contractor may choose to ~~i~~increase the thickness of asphalt concrete by the amount of the aggregate base course thickness deficiency at no additional cost to the Owner. Required grade shall be met.
III	~~1 inch or more in t~~Thickness deficiency by greater than 1 inch	~~Place an additional asphalt concrete overlay, a 9.5 mm mix, of ½ the thickness of the deficiency in thickness for the full roadway width over the area involved, not less than 660 feet or one City block in length.~~(1) The contractor will remove the ~~A~~aggregate base course ~~removed~~ and regrade the sub~~b~~grade ~~regraded~~ to

		allow the required aggregate base course layer thickness to be constructed. (2) If grades allow, the ~~Engineer~~ contractor may propose that~~allow~~ the thickness of asphalt concrete ~~to~~ be increased by the amount of the aggregate base course deficiency at no additional cost to the Owner.
IV~~III~~	A plasticity index of 6 to 7 inclusive~~*~~	~~Place an asphalt concrete overlay ½ inch in thickness over the same total area as required for Type I and II.~~ (1) An Engineering Analysis (EA) ~~shall~~may be prepared by the contractor to evaluate the expected performance of the aggregate base course layer. The EA may provide mitigation options for the Engineer to consider. If the Engineer accepts the plasticity index as a result of the EA, the material will be accepted at full payment. If the Engineer rejects the EA, the contractor will perform either option 2 or 3 below. (2) The contractor may choose to reprocess or treat the existing material to bring it within specification limits or remove deficient material from affected area and replace with material complying with the specifications. (3) If grades allow, the contractor may increase the thickness of asphalt concrete by ½-inch at no additional cost to the Owner.~~If the Engineer accepts the in-place thickness as a result of the EA, a penalty of $1/ton shall be applied to the subject aggregate base course.~~
~~I~~V	A plasticity index of over 7~~*~~	(1) The contractor may choose to reprocess or treat the existing material to bring it within specification limits or ~~R~~remove deficient material from affected area and replace with material complying with the specifications.

~~* The plasticity index shall be in accordance with AASHTO T-146 Method A (wet preparation), T-89 and T-90.~~

310.4 PAYMENT:

Payment for aggregate ~~untreated~~ base course will be made on the basis of the contract unit price per ton unless an alternate basis of payment is provided in the proposal.

MAG Concrete Working Group

Meeting Notes

Thursday, July 20, 2011, 1:30 pm at the ARPA Offices

Present:

See attached attendance sheet.

Discussion:

The following were emailed or handed out to members for review and comments:

	Meeting notes from 6-9-11 with attendance sheet
701	Rock, Gravel, and Sand
702	Base Materials
703	Riprap Construction Rip Rap
220	Rip Rap Construction
623	Special Bedding for Mainline Storm Drain Pipe
705	Portland Cement Treated Base
309	Lime Stabilization or Modification of Sub grade
310	Untreated Base Course
311	Soil Cement Base Course
312	Cement Treated Base

1) The proposed revision of Section 701 was discussed with clarifications from Don Cornelison and Peter Kandaris. It was determined that additional work was needed in Sections 728, 725, and 776 to go along with the proposed modifications. Jeff Hearne will work on the appropriate draft revisions for possible inclusion in Case 11-29.
2) The proposed revision of Section 702 was discussed with clarifications from Don Cornelison and Peter Kandaris. The need for 2 types of base materials was discussed with no real changes to the draft proposed.
3) The proposed revision of Section 703 was discussed with clarifications from Don Cornelison and Peter Kandaris. The group also went over the latest draft section 220, pertaining to Riprap Construction – specifically discussing the two options proposed for the table on grout requirements. Several ways to simplify the table and associated notes was proposed with Jeff Hearne to re-draft the Section for possible inclusion in Case 11-31.
4) The draft of new Section 623 was discussed with potential revisions relating to CSLM being proposed. Jeff Hearne will re-draft the wording and submit to Syd Anderson for review.
5) The drafts of Sections 705, 309, 310, 311, and 312 were very briefly discussed with no proposed changes.

Date and Agenda for Next Meeting:

The next meeting is scheduled for **Wednesday, August 17th at 1:30 in the ARPA Offices**. We will finalize draft versions of several sections for case submittal and continue to discuss specific revisions to other sections being reviewed.