July 31, 2013

TO: Members of the MAG Standard Specifications and Details Committee

FROM: Tom Wilhite, City of Tempe, Chair

SUBJECT: MEETING NOTIFICATION AND TRANSMITTAL OF TENTATIVE AGENDA

Wednesday, August 7, 2013 at 1:30 p.m.
MAG Office, Suite 200 (Second Floor), Ironwood Room
302 North 1st Avenue, Phoenix

A meeting of the MAG Specifications and Details Committee has been scheduled for the time and place noted above. Members of the MAG Specifications and Details Committee may attend the meeting either in person, by videoconference or by telephone conference call. If you have any questions regarding the meeting, please contact Committee Chair Tom Wilhite at 480-350-2921 or Gordon Tyus, MAG staff at 602-254-6300.

In 1996, the Regional Council approved a simple majority quorum for all MAG advisory committees. If the MAG Specifications and Details Committee does not meet the quorum requirement, no action can be taken. Attendance at the meeting is strongly encouraged.

Pursuant to Title II of the Americans with Disabilities Act (ADA), MAG does not discriminate on the basis of disability in admissions to or participation in its public meetings. Persons with a disability may request a reasonable accommodation, such as a sign language interpreter, by contacting Gordon Tyus at the MAG office. Requests should be made as early as possible to allow time to arrange the accommodation.

It is requested (not required) that written comments on active cases be prepared in advance for distribution at the meeting.

MAG Standard Specifications and Details Committee
TENTATIVE AGENDA
August 7, 2013

COMMITTEE ACTION REQUESTED

1. Call to Order and Introductions

2. Call to the Audience
An opportunity is provided to the public to address the MAG Specifications and Details Committee on items that are not on the agenda that are within the jurisdiction of MAG, or non-action agenda items that are on the agenda for discussion or information only. Citizens will be requested not to exceed a three minute time period for their comments. A total of 15 minutes will be provided for the Call to the Audience agenda item, unless the committee requests an exception to this limit. Please note that those wishing to comment on agenda items posted for action will be provided the opportunity at the time the item is heard.

2. Information.

3. Approval of June 5, 2013, Meeting Minutes

3. **Review and approve minutes of the July 10, 2013 meeting.**

4. ASTM Portal Update:
Jim Thomas, ASTM International

4. Information and discussion.

New Cases for 2013

5. Case 13-01 Miscellaneous Corrections:
A. Revise title of Section 324
B. Section 505.6.3.3 (4) Typing error correction
C. Section 735.4 (D) Delete reference to AASHTO M-315
D. Correction to Detail 501-5
E. Correct typo in Section 311 Title
F. Remove reference to Section 702.4 in Subsection 795.8.4 Decomposed Granite
G. Revise Section 107.4 to change the Arizona Revised Statue reference 41-846 to 41-865.
H. Remove "AND" in the title of Section 725 so it reads "Portland Cement Concrete"
I. Section 108.8 Correction: Change "or" to "and" in first line.
J. Add missing superscript on 301.3 and correct typo in 321.14.3
K. Correct Detail 391-1.
L. Change "finished" to "furnished" in Section 735.1 (second paragraph)

5. **Information, discussion and possible action.**
Sponsors: Bob Herz, Maricopa County
Peter Kandaris, DGA,
Jeff Hearne, Concrete WG
Rod Ramos, Scottsdale
(Updated with new corrections case L)

6. Case 13-08:
Revision to Section 321.8.8 Thickened Edge. Eliminate references to 'base course' to clarify the surface being referenced.

6. **Information, discussion and possible action.**
Sponsor: Bob Herz, Maricopa County
(Updated)

7. Case 13-09:
Revision to Section 321 Asphalt Penalty Tables based on City of Mesa Supplements.

7. Information and discussion.
Sponsor: Bob Draper, City of Mesa
(Updated)

8. Case 13-12:
Revisions to Section 340: Concrete Curb, Gutter, Sidewalk, Sidewalk Ramps, Driveway and Alley Entrance.

8. **Information, discussion and possible action.**
Sponsor: Peter Kandaris,
Concrete Working Group
(Updated)

9. Case 13-14:
Revisions to Section 711 Paving Asphalt to update tests and add new polymer modified section.

9. **Information, discussion and possible action.**
Sponsor: Jeff Benedict, Asphalt Working Group
(Updated)

10. Case 13-15:
Revisions to MAG Sections 603, 615 and 618 for flexible pipe.

10. Information and discussion.
Sponsor: Warren White, Chandler

11. Case 13-16:
Revision to Section 602; Trenchless Installation of Steel Casing.

13. Information and discussion.
Sponsor: Jim Badowich, Avondale
(Updated)

12. Case 13-19:
Revisions to Section 345 - Adjusting Frames, Covers, Valve Boxes, and Water Meter Boxes.

12. Information and discussion.
Sponsor: Brian Gallimore, Materials WG

13. Case 13-20:
Make Section 610 Hydrostatic Test Methods consistent with AWWA C600-10.

13. **Information, discussion and possible action.**
Sponsor: Troy Tobiasson, Goodyear

14. Case 13-21:
Create a new Section 742 Pre Cast Manhole Bases. Add details for construction and installation.

14. Information and discussion.
Sponsor: Craig Sharp, Buckeye

15. Case 13-22:
Update Sections 625 and 775 to remove references to steps and the use of bricks in manholes.

15. Information and discussion.
Sponsor: Craig Sharp, Buckeye

16. Case 13-23:
Update and Revise Section 309 – Lime Stabilization or Modification of Subgrade.

16. Information and discussion.
Sponsor: Brian Gallimore, Materials WG

17. Case 13-24:
Update Detail 270 Frame and Cover to make the depth of the cover 4", remove the chain attachment, and make drafting corrections.

17. Information and discussion.
Sponsor: Bob Herz, Maricopa County
(Updated)

18. Case 13-25:
Revise Section 729 Expansion Joint Filler.

18. Information and discussion.
Sponsor: Jeff Hearne, Concrete WG
(Updated)

General Discussion

19. Working Group Reports

19. Information and discussion.
Water/Sewer Chair: Jim Badowich, Avondale
Asphalt Chair: Jeff Benedict
Materials Chair: Brian Gallimore
Concrete Chair: Jeff Hearne
Outside ROW: Peter Kandaris

20. General Discussion

20. Information and discussion.

21. Request for Future Agenda Items

21. Information and discussion.

Adjournment

MEETING MINUTES FROM THE MARICOPA ASSOCIATION OF GOVERNMENTS STANDARD SPECIFICATIONS AND DETAILS COMMITTEE

July 10, 2013

Maricopa Association of Governments Office, Ironwood Room
302 North First Avenue
Phoenix, Arizona

AGENCY MEMBERS

Jim Badowich, Avondale, Vice Chair
Craig Sharp, Buckeye (proxy)
Sheina Hughes, Chandler (proxy)
* Antonio Hernandez, El Mirage
Tom Condit, Gilbert
Mark Ivanich, Glendale
Troy Tobiasson, Goodyear
Bob Herz, MCDOT
Bob Draper, Mesa
Dan Nissen, Peoria
Syd Anderson, Phoenix (St. Trans.)
Jami Erickson, Phoenix (Water)
Rodney Ramos, Scottsdale
Jason Mahkovtz, Surprise
Ken Halloran, Tempe, (proxy)
* Harvey Estrada, Valley Metro
* Gregory Arrington, Youngtown

ADVISORY MEMBERS

Jeff Benedict, ARPA
Tony Braun, NUCA
Slade Ottney, NUCA
Amanda McGennis, AGC (proxy)
Brian Gallimore, AGC
Jeff Hearne, ARPA
Peter Kandaris, Independent
Paul R. Nebeker, Independent
* Jacob Rodriguez, SRP

MAG ADMINISTRATIVE STAFF

Gordon Tyus

* Members not attending or represented by proxy.

GUESTS/VISITORS

John Bacigalupi, Contech
Jared Dusha, Contech
Art Glover, FCDMC
Mike Hook, ACPA
John Kanzlemar, Contech
Yannick Mets, Gilbert
Arvid Veidmark, Specialized Services Co.
Steve Waller, Rinker

1. Call to Order

   Vice Chair Jim Badowich called the meeting to order at 1:32 p.m. Mr. Badowich welcomed Sheina Hughes, proxy for Warren White of Chandler and Ken Halloran, proxy for Tom Wilhite of Tempe.

2. Call to the Audience

   Vice Chair Badowich opened the call to the audience. No members of the audience requested to speak.

3. Approval of Minutes

   The members reviewed the June 5, 2013 meeting minutes. Troy Tobiasson introduced a motion to accept the minutes as written. Bob Herz seconded the motion. A voice vote of all ayes and no nays was recorded.

Review of 2012 Carry Forward Cases

4. Case 12-12: Steel Reinforced Polyethylene Pipe

   Add new Section 739 for Steel Reinforced Polyethylene (SRPE) Pipe. Sponsor Rod Ramos said the latest draft was in the agenda packet. It addressed a few minor comments from the previous meeting and was discussed during the last water/sewer working group meeting. He noted there had been some discussion about limiting the size of the pipe. He said the material references ASTM and the design uses AASHTO bridge specifications. Mr. Ramos reviewed existing pipe sections and reported that MAG did not limit the size of reinforced concrete pipe, since it references ASTM C76, which already specifies size limitations. He said the same is true of non-reinforced concrete pipe in Section 736 which references ASTM C14. The HDPE specification currently has a limit of 120". He said Scottsdale has used SRPE up to 72" in diameter and he thought Glendale has also used larger sizes.

   To be consistent with other sections, Mr. Ramos suggested removing any mention of size limitations, so that the MAG specs would not have to be updated as the ASTM that it references is updated. He asked for a straw poll of voting members to judge their preference on the size limitations of the pipe: none, 120" or 60" in diameter. Bob Herz said he was okay with the 120" size. Dan Nissen suggested not specifying a size in order to be consistent with other pipe sections. Jim Badowich noted that there were size limitations on other pipes such as for water distribution. Bob Draper moved to accept the case with the removal of the size limitation. Rod Ramos seconded the motion. Further discussion continued.

   Bob Herz requested to add the requirement that the pipe design comply with the AASHTO LRFD Bridge Design Specifications. John Kanzlemar said he had no problem adding the reference, stating that SRPE currently meets AASHTO LRFD Bridge Design Specifications, Section 12.

Mike Hook, representing the Concrete Pipe Association, said they do not recommend using the pipe for sizes greater than 60" because it has not been approved by AASHTO highway specifications. He asked why the county thought of limiting the size during last month's discussion, but now does not. Mr. Herz said he did further research since the last meeting and found the increased size to be acceptable. Rod Ramos said he wants to increase competitive bidding on larger diameter jobs, and believes the concrete pipe manufactures object to the use of SRPE at larger sizes as a way to reduce competition in this area. Mr. Hook asked how many manufacturers there are for SRPE. Mr. Herz said that currently he knows of one, but said that by including the material specifications in MAG, it would open up the market to more manufacturers. That is one of the reasons he wanted to add the reference to the AASHTO design requirements in the new specification to ensure that other manufacturers using it will design pipe comparable to that currently being used.

Jim Badowich said the water/sewer working group is working on the installation and testing requirements and believes the testing will be more stringent. Peter Kandaris summarized the changes to the case to remove the size limit of 120" and add the requirement for pipe design to comply with the AASHTO LRFD Bridge Design Specifications. The maker of the motion and second agreed to the changes and Vice Chair Badowich called for a vote. A voice vote was taken. The case was approved, 10 yes, 0 no, 3 not present. Three members abstained, Avondale, Buckeye and Phoenix.

New 2013 Cases

5. Case 13-01 A-L: Miscellaneous Corrections

   One new corrections case was added, 13-01K, which corrected some text display errors in Detail 391-1. Rod Ramos said that in his review of other pipe sections, he found an error in the second paragraph of Section 735.1. The text says "to be finished" when it should say "to be furnished." He suggested adding this to the list of corrections as letter L. Since this was the last month to add new cases, Troy Tobiasson suggested the committee vote on all the correction cases at the next meeting.

6. Case 13-08: Revision to Section 321.8.8 Thickened Edge

   Eliminate references to 'base course' to clarify the surface being referenced. Bob Herz said he passed out a new version before the meeting that had one change, and included a couple of photos showing the installation of the thickened edge on a new roadway. The change to the text in Section 321.8.8 was to add the following sentence in order to clarify the asphalt timing issue discussed at the last meeting. "Placement of tack coat on the surface of the compacted thickened edge asphalt may be omitted when additional asphalt pavement is placed on the same day and the Engineer agrees that the surface of the thickened edge asphalt has remained clean."

Since there was no further discussion, Mr. Herz proposed to vote on the case at the next meeting.

7. Case 13-09: Revision to Section 321 Asphalt Penalty Tables

   Raise penalties in tables based on City of Mesa supplement. Bob Draper said that he missed the last asphalt working group meeting where the case was discussed, and received a modified version from the working group. He has been reviewing it and will be at the next asphalt working group meeting to hash out differences and hopefully come back with an updated version in August for the committee to discuss, with the goal to vote on the case during the September meeting.

8. Case 13-10: Revision to Section 301.7 (Subgrade Preparation) MEASUREMENT

   Add subgrade preparation measurement for graded non-surfaced areas designated for vehicle traffic (driveways and roadways). Bob Herz said the there were no changes since the last meeting, and if there was no further discussion, he would move to accept the case as submitted. Bob Draper seconded the motion. Rod Ramos asked if it was clear what was meant by the phrase "accepted surface area." Other members thought it was clear to them. A voice vote was taken. The motion passed: 12 yes, 0 no, 1 abstain, 3 not present.

9. Case 13-12: Revisions to Section 340: Concrete Curb, Gutter, Sidewalk, Sidewalk Ramps, Driveway and Alley Entrance

   Incorporate agency supplements and update Section 340 to current practice. Peter Kandaris provided a new handout during the meeting that incorporated comments from the last meeting. He went over the changes that were summarized on the cover memo provided. Per suggestion from the water/sewer group, he changed the reference for concrete curb cuts to Section 336.2.2.

   There was extensive discussion on the second point describing changes related to subgrade preparation. He discussed how he tried simplifying Section 340.3.1. Section 301 is the controlling section for subgrade preparation, but there were two concepts to be addressed in Section 340. The first was soft and unsuitable materials. These would be dealt with in the same manner as in Section 301. The second was expansive soils. A table showed different remedies based on the percentage of swell, including removal of 24" of subgrade for expansive soils. This requirement was taken from the county supplement. Brain Gallimore thought that 24" was excessive and many members agreed, since they typically remove between 6" to 12". Bob Draper asked who identifies when a soil is expansive – what tests are done? Jim Badowich said most cities require a soil report on developments. Craig Sharp said inspectors can do a swell test if they believe the soil is expansive. One suggestion was to make the removal 6" in either case of unsuitable or expansive soils. Mr. Kandaris said Section 301 does not address expansive soils, so you would still need options for marginally expansive soil treatments. Bob Draper suggested relating it to the P.I. to determine the limits. Peter Kandaris said he would research this option further.

He then went on to highlight the other changes including deleting the 25' spacing of joints in curves, adding language to require contraction joints in curbs and gutters to match sidewalks, and deleting the ADA ramp repair guidelines. Bob Herz clarified that matching the joints in curbs would only be necessary when the sidewalk is attached. He also thought the details drawings, such as 221, be reviewed to ensure they match any changes made to the joint spacing. Mr. Kandaris said he would review the details as well, and planned to discuss the case further at the next concrete working group meeting. He hoped to finalize any changes to the case so it could be voted on next month.

10. Case 13-13: Revisions to Section 415 Flexible Metal Guardrail

    The purpose was to allow use of either 8"x8" or 6"x8" wood posts for continuous guardrails, and delete reference to manufacturer's recommendations. Bob Herz said there were no changes since the last meeting, and asked for any comments. Seeing no further discussion Mr. Herz moved and Troy Tobiasson seconded a motion to accept case 13-13 as presented. A voice vote was taken. The motion passed: 13 yes, 0 no, 0 abstain, 3 not present.

11. Case 13-14: Revisions to Section 711 Paving Asphalt

    Revise Section 711 to update AASHTO references and add a new polymer modified section. Jeff Benedict said he received comments today from Maricopa County suggesting addition of a parameter for solubility testing. Mr. Benedict said due to these comments he would like to postpone the vote until next month so they can discuss the changes at the next asphalt working group meeting. Ms. McGinnis advised against adding solubility tests because she believed it would shut out certain kinds of materials and limit competition.

12. Case 13-15: Revisions to MAG Sections 603, 615 and 618 for Flexible Pipe.

    Update pipe installation requirements to allow for flexible pipe types. Sheina Hughes, filling in for Warren White, reviewed a handout provided at the meeting that gave additional information on the progress of the case. She explained that the goal was to separate rigid and flexible pipe installation and to update the specifications. This included definitions and details. The handout included a page of definitions that clarify the trench excavation and backfill terms and more closely match those used by ASTM. The terminology would be updated in the specifications and also details. Suggested changes to Details 200-1 and 200-2 were provided, which included a new trench cross-section detail.

    Jim Badowich said the water/sewer working group was continuing to review and update this case. He talked about deliberations over the best location for specifications relating to initial backfill and final backfill, and asked the committee for input.

    Rod Ramos asked if you could limit the pavement removal based on thickness of the pavement. He said they have some areas of very thick pavement, and do not always want to remove it. Peter Kandaris said he still had a table from a previous case updating detail 200-1 and would review it.

Bob Herz asked how you can test compaction at the haunches. Bob Draper said you can test it at the spring line, and use that as a proxy, but he agreed there is no perfect way to test the haunches area. Jim Badowich said that is why many agencies are using CLSM as a backfill option. The case would continue to be reviewed by the working group.

13. Case 13-16: Revision to Section 602; Trenchless Installation of Steel Casing

    Retitle and revise Section 602 to match current industry standards. Jim Badowich said there were no changes at the last working group meeting. He asked Arvid Veidmark, who helped develop the case, if he had any comments. He said that they added the option of mechanical seals instead of bulkheads. When asked about the use of grout in a current project, he suspected that they were just following the existing Section 602 requirements, but that it was recommended in the revised specifications to use spacers and 3/8" pea gravel instead. Jami Erickson asked if any details were included. Mr. Veidmark said details for the bulkheads and spacers could be included. Jim Badowich said he was getting feedback from others in Avondale and planned for a final version for review next month with a vote planned for the September meeting.

14. Case 13-17: Revision to Section 430.4 DECOMPOSED GRANITE AREA

    Eliminate placement of polyethylene below decomposed granite. Since there were no changes or comments, Bob Herz moved to accept the case as presented. Rod Ramos seconded the motion. A voice vote was taken. The motion passed: 13 yes, 0 no, 0 abstain, 3 not present.

15. Case 13-18: Revisions to Detail 250-1 Driveway Entrances with Detached Sidewalk.

    Incorporate 2012 revisions made to Detail 250-2 into Detail 250-1. Bob Herz said there were no changes since last month, only that the detail drawing had been updated to include the proposed changes. Brian Gallimore asked about the 2% maximum slope. Mr. Herz said that was the maximum now allowed by ADA. Dan Nissen noticed that the word "FOR" was removed on the note on the plan view, but not on the elevation view. Mr. Herz agreed it should be deleted to be consistent. Jason Mahkovtz asked if there could be a conflict between keeping a 2% slope on the driveway portion and having it match the top of curb. Rod Ramos suggested removing the 2% and just showing that it is sloped was enough to ensure drainage and allow the driveway to be designed as needed for the site. Mr. Herz moved to accept the case with the two changes described. Rod Ramos seconded the motion. A voice vote was taken. The motion passed: 13 yes, 0 no, 0 abstain, 3 not present.

16. Case 13-19: Revisions to Section 345 - Adjusting Frames, Covers, Valve Boxes, and Water Meter Boxes.

    Add the process of lowing and update the section for current practices. Brian Gallimore said he received comments from Maricopa County regarding pre-lowering utilities for new roadways in addition to milling operations. He questioned if this was necessary on new construction. There were also questions about the use of rebar in concrete collars, used to increase their strength. Jami Erickson asked if he was planning to make any changes to Detail

391. If not the water/sewer group would likely be revising the detail in the future. He said he currently was not changing the detail, but encouraged the working group to review it. Mr. Gallimore said they planned to discuss the case at the next working group meeting. Mark Ivanich asked about waiting to make adjustments before the final lift. Examples were given on past Phoenix developments where the final asphalt paving was not done until home construction was completed. Brian Gallimore also noted that some cities don't want the collars raised so they are not seen. Jami Erickson said it actually makes manholes easier to identify when the collars are visible.

17. Case 13-20: Make Section 610 Hydrostatic Test Methods consistent with AWWA C600-10.

Update MAG Test Methods to match AWWA standards. Troy Tobiasson described that the main purpose of the changes to Section 610 were to meet AWWA standards. There were some other minor changes he noted such as removing asbestos pipe and adding PVC pipe. Bob Herz recommended removing the text "the current" and "at the time the Project begins" from the 3rd sentence of 610.3 (B). There was also a question about what a "major" street is under 610.4. Jami Erickson said most subdivisions do not have section plans for water lines. Members discussed how to ensure minimum cover above water lines. Mr. Herz asked about including PVC pipe in the specification. Mr. Badowich said it is used occasionally in developments and fire lines.

Mr. Tobiasson then went on to describe the changes to the hydrostatic testing formula. The new formula is used by Phoenix and meets AWWA standards. The current formula in MAG allows for more leakage. The revised specification has testing allowances, but does not refer to leakage allowance. He said the test is designed with no more the 5% above the 200 psi testing pressure to stop contractors from raising the pressure high enough to still be above 200 psi after the test, even with greater pressure loss. Paul Nebeker said testing pressure can vary greatly based on the temperature. Craig Sharp said they had problems with freezing water when testing in Northern Arizona, and had to heat the pipe during the test. Mr. Nebeker said much of the testing came about due to inferior pipe that is no longer used. He also said that ductile iron pipe can be fragile. If not handled correctly, it can break and leaks can result.

Mr. Tobiasson said the case would be reviewed again at the water/sewer working group. He planned to get a final version of the case ready for a vote during the next meeting, focusing on updating MAG to meet the AWWA requirements. He said he is continuing to review Section 610 as a whole, and would appreciate other comments and corrections, although they may have to wait to be incorporated in a new case next year.

18. Case 13-21: Create a new Section 742 Pre Cast Manhole Bases. Add detail drawings for construction and installation.

Create a new section and details for pre-cast manhole bases. Craig Sharp introduced the case at the last meeting and asked for comments. Seeing no comments he went on to discuss the next, related case.

19. Case 13-22: Update Sections 625 and 775 to remove references to the use of bricks in manholes and remove references to manhole steps.

    Update Sections 625 Manhole Construction to remove references to the use of bricks and manhole steps. Also remove these references in Section 775Brick and Concrete Masonry Units. Craig Sharp said the second case removed references to bricks and steps in manholes. Bob Herz said the detail drawings would need to be reviewed so they don't reference non-existing specifications. Jim Badowich said they were planning updating the manhole details 420-1 and 420-2 as well and adding them to this case. Details 421 and 422 also will need to be reviewed.

    Bob Herz asked for any reference to "bid price" be changed to "contract unit price" since not all contracts are bid.

    There was discussion if agencies have separate pay items for installing the manholes and adjusting them. Glendale and Mesa representatives said they don't pay separately, while other agencies did. Mr. Badowich said Avondale has them as separate pay items because they are typically done by different contractors. Also, it was difficult to track which manholes where new installs, and which were adjusted only.

    Jeff Hearne alerted Mr. Sharp to a typo in the precast section. Mr. Badowich said the case would be discussed at the water/sewer meeting and the related details would also be revised.

20. Case 13-23: Update and Revise Section 309 – Lime Stabilization or Modification of Subgrade.

    Clarify use of lime for stabilization and modification purposes. Brain Gallimore said he received a new comment from the city of Phoenix, and planned on reviewing the case and making final updates at the next materials working group meeting.

21. Case 13-24: Update Detail 270 Frame and Cover.

    Make the depth of the cover 4", remove the chain attachment, and make drafting corrections to Detail 270. Bob Herz presented a new copy of the case at the meeting. The main purpose was to remove the chain attachment. The hole in the lid for attachment of the chain caused a weak spot in the lid which would sometimes break.Increasing the cover to 4" in depth would assist in making certain the lid would stay in place. The update included a manufacturer's drawing of the frame and cover for informational purposes. The depiction of the Detail 270 frame and cover shown in Detail 391-1 is to be revised to show the increased lid depth. He also explained additional changes that the city of Phoenix made in their supplemental detail.

    Members discussed the methods used by the Phoenix detail to strengthen the concrete collar including using rebar, scoring and high-early concrete. The purpose of these measures was to allow traffic back on the road more quickly. The Phoenix revisions are not being included as part of the proposed changes.

Bob Draper suggested combining Section A-A and B-B on one drawing. Mr. Herz said the fillet dimensions could be shown on a blow-up. He hoped to have revisions to the drawings ready for the next meeting.

22. Case 13-25: Revise Section 729 Expansion Joint Filler.

Delete out of date specifications, and reference current active ASTM standards. Jeff Hearne explained that most of the material in this section was out of date, so the case deletes most of it, but it does leave in references to active ASTM standards. Bob Herz suggested the pour type joint filler requirements be modified to add the ADOT restrictions. Mr. Hearne said the case would be discussed at the next concrete working group meeting.

23. New Cases for 2013

No additional new cases were introduced.

24. Working Group Reports

Vice Chair Badowich began the working group reports.

a. **Water/Sewer Issues Working Group**
Jim Badowich said the group met June 18th at 1:30 p.m. in the MAG Chaparral Room. He said most cases the group reviewed were already discussed. He said one of the new items discussed was a method of valve box stabilization. Jamie Erickson described a product the City of Phoenix is using that helps keep valves installed vertically, rather than leaning at an angle. The group will continue to review active cases, as well as work on manhole details. The next meeting is scheduled for July 23rd at 1:30 p.m. in the MAG office.

b. **Asphalt Working Group**
Jeff Benedict said the group met June 13th at noon at the ARPA offices, and that the notes were included in packet. He said they would be reviewing the penalty tables and other cases discussed during the meeting. The next asphalt working group meeting is planned for July 25th at noon at the ARPA office.

c. **Materials Working Group**
Brian Gallimore said they would be working on finalizing the lime specification and the specifications for adjusting manholes. The meeting would follow the asphalt working group.

d. **Concrete Working Groups**
Jeff Hearne said the meeting notes were included in the package. He said they would continue to review active cases for Section 340 and Section 729. He said the changes to Section 324 were tabled while the active cases are completed. The next meeting is scheduled for July 25th at ARPA following the materials working group at about 1:30 p.m.

e. **Outside Right-of-Way Working Group**
Peter Kandaris said he met with members before the committee meeting. He noted that as the MAG specifications have been updated, they seem to be less of a need for modifications just for the outside ROW. The main area of difference seems to be in the earthwork section. He suggested that instead of creating a separate document, we may just want a supplemental section to the MAG book that focuses on agency supplements made for areas outside the right-of-way. Jim Badowich asked about including backfill protection. Mr. Kandaris said he currently doesn't have information on them. Mr. Badowich commented that some fire lines are using reduced pressure when fire retardant additives are used. Mr. Kandaris said the next meeting will be on August 8th at 12:30 p.m. prior to the regular committee meeting.

25. General Discussion

Vice chair Badowich asked for general discussion items. Bob Herz said he was reviewing Case 13-05 that was approved last month, and asked if he could get a copy of the currently unpublished AASHTO M 330 standard that was referenced. Sheina Hughes (Chandler) said she would provide Mr. Herz the information.

26. Adjournment:

Seeing no further business, the vice chair adjourned the meeting at 4:10 p.m.

2013 PROPOSED REVISIONS TO MAG SPECIFICATIONS AND DETAILS

(Updated information can be found on the website: http://www.azmag.gov/Committees/Committee.asp?CMSID=1055)

CASE	DESCRIPTION	PROPOSED BY	MEMBER	SUBMITTAL DATE Last Revision	VOTE DATE	VOTE	
	CARRY FORWARD CASES FROM 2012						
12-12	Case 12-12: New Section 739 – Steel Reinforced Polyethylene Pipe (SRPE).	Scottsdale	Rod Ramos	07/11/2012 07/10/2013	Approved 07/10/2013	10 0 3	Yes No Abstain
	NEW CASES FOR 2013						
13-01	**Case 13-01: Miscellaneous Corrections:** A. Revise title of Section 324 B. Section 505.6.3.3 (4) Typing error correction C. Section 735.4 (D) Delete obsolete reference to AASHTO M-315 D. Correction to Detail 501-5 E. Correct typo in Section 311 Title F. Remove reference to Section 702.4 in Subsection 795.8.4 Decomposed Granite G. Revise Section 107.4 to change the Arizona Revised Statue reference 41-846 to 41-865. H. Remove the word "AND" in the title of Section 725 so it reads "PORTLAND CEMENT CONCRETE" I. Section 108.8 Correction: Change "or" to "and" in first line. J. Add missing superscript in 301.3 and correct typo in 321.14.3. K. Correct errors in Detail 391-1. L. Change the word "finished" to "furnished" in the second paragraph of 735.1.	MCDOT	Bob Herz Peter Kandaris Jeff Hearne Rod Ramos	01/02/2012 07/10/2013	Scheduled for: 08/07/2013	0 0 0	Yes No Abstain
13-02	Case 13-02: Revision to Section 337 CRACK SEALING to obtain compatibility with Maricopa County requirements.	MCDOT	Bob Herz	01/02/2012 04/04/2013	Approved 05/01/2013	14 0 0	Yes No Abstain
13-03	Case 13-03: Revision to Section 321.8.6 Asphalt Concrete Overlay to obtain uniformity with Maricopa County requirements.	MCDOT	Bob Herz	02/06/2013 04/04/2013	Approved 05/01/2013	14 0 0	Yes No Abstain

2013 PROPOSED REVISIONS TO MAG SPECIFICATIONS AND DETAILS

(Updated information can be found on the website: http://www.azmag.gov/Committees/Committee.asp?CMSID=1055)

CASE	DESCRIPTION	PROPOSED BY	MEMBER	SUBMITTAL DATE Last Revision	VOTE DATE	VOTE	
13-04	Case 13-04: Revision to Detail 120 SURVEY MARKER.	MCDOT	Bob Herz	02/06/2013 04/08/2013	Approved 05/01/2013	14 0 0	Yes No Abstain
13-05	Case 13-05: New Section 740 Polypropylene Pipe and Fittings for Gravity Storm Drain and Sanitary Sewer.	Chandler	Warren White	02/06/2013 05/22/2013	Approved 06/05/2013	12 0 2	Yes No Abstain
13-06	Case 13-06: Modify Part 600 title to include Storm Drain and Irrigation.	Phoenix	Jami Erickson	03/06/2013 04/04/2013	Approved 05/01/2013	13 0 0	Yes No Abstain
13-07	Case 13-07: Revisions to Detail 201 ASPHALT PAVEMENT EDGE DETAILS. Correct miscellaneous errors and change the Type B thickened edge depth dimension from “8 inch minimum” to “8 inches.”	MCDOT	Bob Herz	04/03/2013	Approved 06/05/2013	14 0 0	Yes No Abstain
13-08	Case 13-08: Revision to Section 321.8.8 Thickened Edge. Eliminate references to ‘base course’ to clarify the surface being referenced.	MCDOT	Bob Herz	04/03/2013 07/10/2013	Scheduled for: 08/07/2013	0 0 0	Yes No Abstain
13-09	Case 13-09: Revision to Section 321 Asphalt Penalty Tables based on City of Mesa Supplements.	Mesa/ Asphalt WG	Bob Draper	04/03/2013 07/29/2013		0 0 0	Yes No Abstain
13-10	Case 13-10: Revision to Section 301.7 (Subgrade Preparation) MEASUREMENT.	MCDOT	Bob Herz	04/03/2013 05/06/2013	Approved 07/10/2013	12 0 1	Yes No Abstain
13-11	Case 13-11: Delete Section 737 ASBESTOS-CEMENT PIPE AND FITTINGS FOR STORM DRAIN AND SANITARY SEWER.	MCDOT	Bob Herz	05/01/2013	Approved 06/05/2013	14 0 0	Yes No Abstain
13-12	Case 13-12: Revisions to Section 340: Concrete Curb, Gutter, Sidewalk, Sidewalk Ramps, Driveway and Alley Entrance.	Concrete WG	Peter Kandaris	05/01/2013 07/31/2013	Scheduled for: 08/07/2013	0 0 0	Yes No Abstain
13-13	Case 13-13: Revisions to Section 415 Flexible Metal Guardrail.	MCDOT	Bob Herz	05/01/2013	Approved 07/10/2013	13 0 0	Yes No Abstain

2013 PROPOSED REVISIONS TO MAG SPECIFICATIONS AND DETAILS

(Updated information can be found on the website: http://www.azmag.gov/Committees/Committee.asp?CMSID=1055)

CASE	DESCRIPTION	PROPOSED BY	MEMBER	SUBMITTAL DATE Last Revision	VOTE DATE	VOTE	
13-14	Case 13-14: Revisions to Section 711 Paving Asphalt to update tests and add new polymer modified section.	Asphalt WG	Jeff Benedict	05/01/2013 07/25/2013	Scheduled for: 08/07/2013	0 0 0	Yes No Abstain
13-15	Case 13-15: Revisions to MAG Sections 603, 615 and 618 for flexible pipe.	Chandler/ Water-Sewer WG	Warren White	05/01/2013 07/10/2013		0 0 0	Yes No Abstain
13-16	Case 13-16: Revision to Section 602; Encasement of Water or Sewer Pipe by Jacking or Tunneling Operation.	Avondale/ Water-Sewer WG	Jim Badowich	05/01/2013 07/30/2013		0 0 0	Yes No Abstain
13-17	Case 13-17: Revision to Section 430.4 DECOMPOSED GRANITE AREA. Eliminate placement of polyethylene below decomposed granite.	MCDOT	Bob Herz	05/01/2013	Approved 07/10/2013	13 0 0	Yes No Abstain
13-18	Case 13-18: Revisions to Detail 250-1 Driveway Entrances with Detached Sidewalk.	MCDOT	Bob Herz	06/05/2013 06/26/2013	Approved 07/10/2013	13 0 0	Yes No Abstain
13-19	Case 13-19: Revisions to Section 345 - Adjusting Frames, Covers, Valve Boxes, and Water Meter Boxes.	Materials WG	Brian Gallimore	06/05/2013		0 0 0	Yes No Abstain
13-20	Case 13-20: Make Section 610 Hydrostatic Test Methods consistent with AWWA C600-10.	Goodyear/ Water-Sewer WG	Troy Tobiasson	06/05/2013 07/30/2013	Scheduled for: 08/07/2013	0 0 0	Yes No Abstain
13-21	Case 13-21: Create a new Section 742 Pre Cast Manhole Bases. Add detail drawings for construction and installation.	Buckeye/ Water-Sewer WG	Craig Sharpe	06/05/2013		0 0 0	Yes No Abstain
13-22	Case 13-22: Update Sections 625 and 775 to remove references to steps and the use of bricks in manholes.	Buckeye/ Water-Sewer WG	Craig Sharpe	06/05/2013 07/30/2013		0 0 0	Yes No Abstain
13-23	Case 13-23: Update and Revise Section 309 – Lime Stabilization or Modification of Subgrade.	Materials WG	Brian Gallimore	07/10/2013		0 0 0	Yes No Abstain

2013 PROPOSED REVISIONS TO MAG SPECIFICATIONS AND DETAILS

(Updated information can be found on the website: http://www.azmag.gov/Committees/Committee.asp?CMSID=1055)

CASE	DESCRIPTION	PROPOSED BY	MEMBER	SUBMITTAL DATE Last Revision	VOTE DATE	VOTE	
13-24	Case 13-24 Update Detail 270 Frame and Cover to make the depth of the cover 4", remove the chain attachment, and make drafting corrections.	MCDOT	Bob Herz	07/10/2013 07/16/2013		0 0 0	Yes No Abstain
13-25	Case 13-25: Revise Section 729 Expansion Joint Filler.	Concrete WG	Jeff Hearne	07/10/2013 07/25/2013		0 0 0	Yes No Abstain

MARICOPA COUNTY
Department of Transportation

MEMORANDUM

Date: December 27, 2012

To: MAG Specifications and Details Committee

From: Robert Herz, MCDOT Representative

Subject: Revise title of Section 324 **Case 13-01 A**

PURPOSE: Rigid pavement is commonly referred to as portland cement concrete pavement or PCCP. Although PCCP is a commonly used acronym, MAG specifications do not clearly identify a specification for PCCP. Revising the title of section 324 will clearly identify the specification as being for portland cement concrete pavement (PCCP).

REVISION:
Change section title from *PORTLAND CEMENT CONCRETE STREET PAVEMENT* to *PORTLAND CEMENT CONCRETE PAVEMENT (PCCP)*.

2901 West Durango Street Phoenix, Arizona 85009 Phone: 602-506-4760 Fax: 602-506-5969

MARICOPA COUNTY
Department of Transportation

MEMORANDUM

Date: December 27, 2012

To: MAG Specifications and Details Committee

From: Robert Herz, MCDOT Representative

Subject: Miscellaneous Corrections **Case 13-01 B and C**

PURPOSE: Correct minor errors.

REVISION:

B. Section 505.6.3.3 (4) Typing error correction

Change "Armor: All steel forcast-in-place deck joint …" to "Armor: All steel for cast-in-place deck joint …"

C. Section 735.4 (D) Delete obsolete reference as noted:

(D) Rubber gaskets shall be in accordance with ASTM C443 ~~or AASHTO M 315~~.

2901 West Durango Street Phoenix, Arizona 85009 Phone: 602-506-4760 Fax: 602-506-5969

MARICOPA COUNTY
Department of Transportation

MEMORANDUM

Date: January 15, 2013

To: MAG Specifications and Details Committee

From: Robert Herz, MCDOT Representative

Subject: Correction to Detail 501-5 **Case 13-01 D**

PURPOSE: Correct depicted distance B and E shown on PLAN view of Detail 501-5.

REVISION:

Variable distance B and E shown on the PLAN view are presently shown to the outside edge of the inlet basin wall, they should be shown to the inside edge of the inlet basin wall. (Distances E and F are the legs of a right triangle with hypotenuse K.)

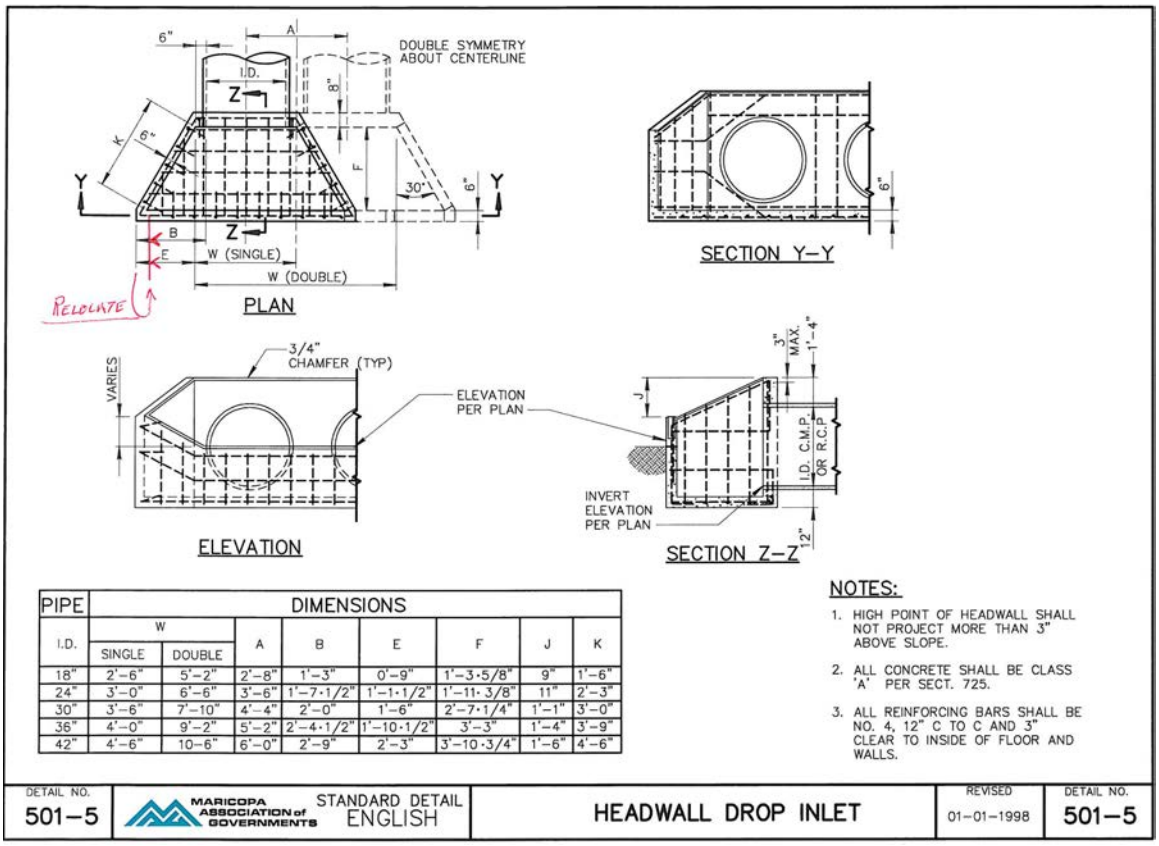

PIPE	DIMENSIONS							
I.D.	W		A	B	E	F	J	K
	SINGLE	DOUBLE						
18"	2'–6"	5'–2"	2'–8"	1'–3"	0'–9"	1'–3·5/8"	9"	1'–6"
24"	3'–0"	6'–6"	3'–6"	1'–7·1/2"	1'–1·1/2"	1'–11·3/8"	11"	2'–3"
30"	3'–6"	7'–10"	4'–4"	2'–0"	1'–6"	2'–7·1/4"	1'–1"	3'–0"
36"	4'–0"	9'–2"	5'–2"	2'–4·1/2"	1'–10·1/2"	3'–3"	1'–4"	3'–9"
42"	4'–6"	10–6"	6'–0"	2'–9"	2'–3"	3'–10·3/4"	1'–6"	4'–6"

2901 West Durango Street Phoenix, Arizona 85009 Phone: 602-506-4760 Fax: 602-506-5969

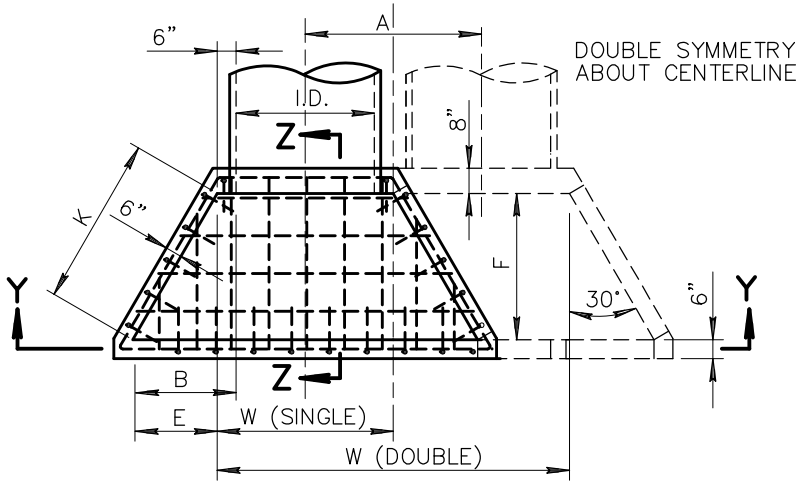

PLAN

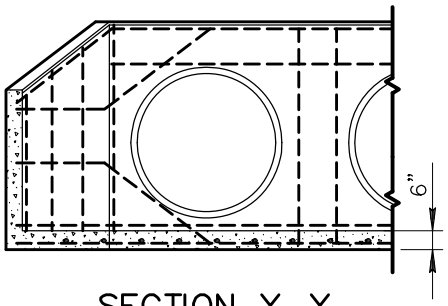

SECTION Y–Y

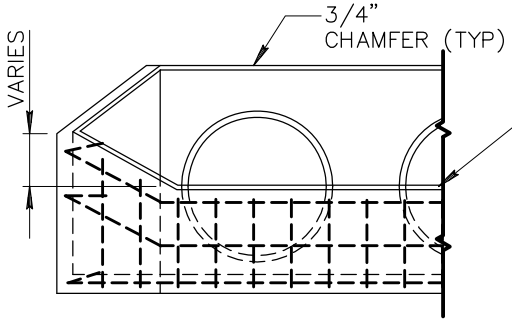

ELEVATION

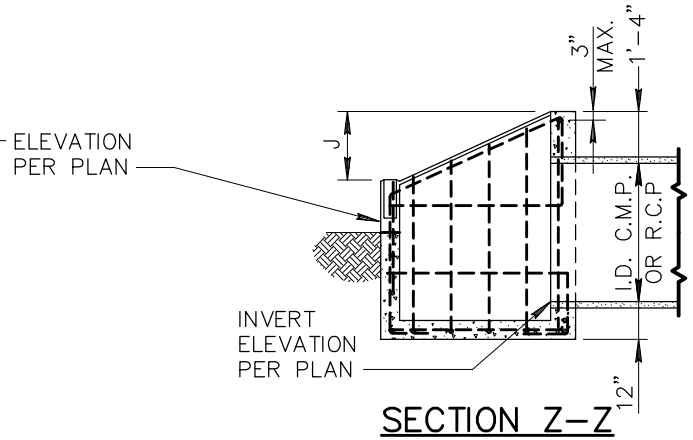

SECTION Z–Z

PIPE	DIMENSIONS							
I.D.	W		A	B	E	F	J	K
	SINGLE	DOUBLE						
18"	2'–6"	5'–2"	2'–8"	1'–3"	0'–9"	1'–3·5/8"	9"	1'–6"
24"	3'–0"	6'–6"	3'–6"	1'–7·1/2"	1'–1·1/2"	1'–11· 3/8"	11"	2'–3"
30"	3'–6"	7'–10"	4'–4"	2'–0"	1'–6"	2'–7·1/4"	1'–1"	3'–0"
36"	4'–0"	9'–2"	5'–2"	2'–4·1/2"	1'–10·1/2"	3'–3"	1'–4"	3'–9"
42"	4'–6"	10–6"	6'–0"	2'–9"	2'–3"	3'–10·3/4"	1'–6"	4'–6"

NOTES:

1. HIGH POINT OF HEADWALL SHALL NOT PROJECT MORE THAN 3" ABOVE SLOPE.
2. ALL CONCRETE SHALL BE CLASS 'A' PER SECT. 725.
3. ALL REINFORCING BARS SHALL BE NO. 4, 12" C TO C AND 3" CLEAR TO INSIDE OF FLOOR AND WALLS.

DETAIL NO.				REVISED	DETAIL NO.
501–5	MARICOPA ASSOCIATION of GOVERNMENTS	STANDARD DETAIL ENGLISH	HEADWALL DROP INLET	01–01–2014	501–5

Case 13-01E

SECTION 311

PLACEMENT AND CONSTRUCTON OF CEMENT TREATED SUBGRADE

I

311.1 DESCRIPTION:

This item shall consist of a cement treated subgrade composed of a mixture of local soil, Portland cement, and water compacted at optimum moisture content.

311.2 MATERIALS:

Portland cement and water shall comply with Sections 725. The soil for the mixture shall consist of the material in the area to be paved. The material shall not contain more than 5 percent gravel or stone retained on a 3 inches sieve. It shall be demonstrated by laboratory tests that the plasticity and strength characteristics as defined in Section 311.4.5 of the soil will be adequately modified by the specified cement content.

311.3 EQUIPMENT:

An ample number of machines, combination of machines and equipment shall be provided and used to produce the complete soil cement treated layer meeting the requirements for soil pulverization, cement distribution, water application, incorporation of materials, compaction, finishing, and for application of the curing material as provided in these specifications.

Mixing shall be accomplished by means of multiple-pass soil-cement mixer, single-pass soil-cement mixer or central plant mixer.

Water may be applied through the mixer or with the water trucks equipped with pressure sprays. Water trucks providing fine fog-type sprays shall be furnished for finishing and curing. Properly adjusted garden type nozzles on a pressure bar may be used to produce fog spray if approved by the Engineer.

Cement spreader shall be a specially constructed device to distribute bulk cement at the specified rate. The spreader shall have the ability to maintain a consistent spread rate over variable travel speeds.

311.4 CONSTRUCTION METHODS:

Prior to construction, the contractor shall remove all deleterious material, organic material, and particles retained on the 3 inch sieve from the area to be treated. The soil shall be brought to a compacted condition, true to line and grade as directed by the Engineer or as shown on the plans. The compacted soil and surface shall be approved by the Engineer prior to proceeding with mixing.

The material shall be scarified, pulverized, mixed with water and cement, compacted, finished and cured in lengths permitting the full roadway width to be complete in not more than 4 hours from the time that cement is exposed to water. Such lengths will generally be not less than 600 feet or the length of one City block and preferably more. Where a gutter section exists the material shall be pulled back from the gutter face for the full depth of the course before processing.

311.4.1 Pulverizing: Prior to application of cement, soil to be processed shall be scarified to depth of base. The material shall be damp at time of scarifying to reduce the dust generation and to aid in pulverization. Soil shall be pulverized until not less than 80 percent, exclusive of gravel or stone, will pass a No. 4 sieve.

311.4.2 Application of Cement: The quantity of cement shall be by weight as a percentage of the dry weight of the soil as determined by the laboratory and/or as directed by the Engineer and shall be applied uniformly on the soil in a manner satisfactory to the Engineer. The allowable deviation in uniformity shall not exceed 10 percent. The entire operation of spreading and mixing shall be conducted in such a manner as will result in a uniform soil cement and water mixture for the full design width and depth.

The percentage of moisture in the soil, at the time of cement application, shall not exceed the quantity that will permit a uniform and intimate mixture of the soil and cement during mixing operations, and it shall not exceed the specified optimum moisture content for the soil cement mixture.

MARICOPA COUNTY
Department of Transportation

MEMORANDUM

Date: February 20, 2013

To: MAG Specifications and Details Committee

From: Robert Herz, MCDOT Representative

Subject: Correction to Section 795.8.4 **Case 13-01 F**

PURPOSE: Delete non-existent reference located within Section 795 LANDSCAPE MATERIAL. The testing that was required in the 2012 specification section 702.4 is not needed when decomposed granite is used for general landscaping purposes.

REVISION:

795.8.4 Decomposed Granite: ~~Decomposed granite shall be as per Subsection~~ **~~702.4~~** ~~with the following exceptions.~~ All material used for a specific project or location shall be from a single source and shall present a uniform appearance. The gradation shall be as shown below. If a specific color or type is required, it will be so indicated in the Contracting Agency's specifications.

Sieve Size	Percent Passing
3/4 inch	100%
1/2 inch	60-70
No. 40	5-20

2901 West Durango Street Phoenix, Arizona 85009 Phone: 602-506-4760 Fax: 602-506-5969

MARICOPA COUNTY
Department of Transportation

MEMORANDUM

Date: March 6, 2013

To: MAG Specifications and Details Committee

From: Robert Herz, MCDOT Representative

Subject: Revision to Section 107.4 **Case 13-01 G**

PURPOSE: Change the Arizona Revised Statue reference 41-846 to 41-865.

REVISION:

107.4 ARCHAEOLOGICAL REPORTS:

Attention is directed to Sections 41-844 and 41-~~846~~ 865 Arizona Revised Statues. In view of the above, it shall be a provision of every contract that when archaeological features are encountered or unearthed in the excavation of material pits or of the roadway prism, or other excavation, the Contractor shall report promptly to the Director of the Arizona State Museum and the Contracting Agency. The Contractor will be allowed extra time as appropriate in accordance with the provisions of Section 108.

2901 West Durango Street Phoenix, Arizona 85009 Phone: 602-506-4760 Fax: 602-506-5969

Case 13-01H

SECTION 725

PORTLAND ~~AND~~ CEMENT CONCRETE

725.1 GENERAL:

Portland cement concrete shall be composed of cementitious materials, fine and coarse aggregates, water, and, if specified or allowed, certain chemical admixtures and additives.

TABLE 725-1		
CONCRETE CLASSES - MINIMUM REQUIREMENTS		
Class of Concrete	Minimum Cementitious Materials Content (lbs. per cubic yard)	Minimum Compressive Strength (1) at 28 Days (psi)
AA	600	4000
A	520	3000
B	470	2500
C	420	2000

(1) In accordance with section 725.8.

725.2 CEMENTITIOUS MATERIALS:

Cementitious materials to be used or furnished under this specification shall be:

Portland cement, meeting the requirements of ASTM C150
Type II, low alkali, when no other specific type is specified
Type III, low alkali, for high early strength, when applicable or specified
Type V, low alkali, when specified in the special provisions for applications requiring high sulfate resistance

Portland Pozzolan Cement ASTM C595
Type IP (MS), when no other specific type is specified

Supplementary Cementitious Materials (SCM) shall not be used as an additional cementitious materials replacement in concrete in combination with Portland Pozzolan Cement.

Cementitious materials shall be sampled and tested as prescribed in the applicable ASTM specifications. The Contractor shall obtain and deliver to the Engineer a certification of compliance signed by the material manufacturer, identifying the cementitious material and stating that the cementitious material delivered to the batching site complies with the appropriate specifications. When requested by the Engineer, the Contractor shall furnish three copies of the cementitious materials certification. The cost of furnishing tested cementitious materials shall be considered as included in the contract bid price and no additional allowance will be made therefore.

When suitable facilities, as recommended by the Concrete Plant Manufacturer's Bureau, and approved by the Engineer, are available for handling and weighing bulk cementitious materials, such facilities shall be used. Otherwise the cementitious material shall be delivered in original unopened sacks that bear the name or brand of the manufacturer. The type of cementitious material, and the weight contained in each sack shall be plainly marked thereon.

Cementitious materials shall be stored in such manner as to permit ready access for the purpose of inspection and identification, and so as to be suitably protected against damage by contamination or moisture. Should any lot of bulk cementitious material be delivered to the site show evidence of contamination, the Engineer may require that such lot be removed from the site.

725.2.1 Supplementary Cementitious Materials (Pozzolans): Supplementary Cementitious Materials to be used in concrete or furnished under this specification shall conform to the appropriate ASTM requirements as follows:

Fly ash or natural pozzolan	ASTM C618 and C311
Silica Fume	ASTM C1240

MARICOPA COUNTY
Department of Transportation

MEMORANDUM

Date: March 18, 2013

To: MAG Specifications and Details Committee

From: Robert Herz, MCDOT Representative

Subject: Section 108.8 Correction **Case 13-01 I**

PURPOSE: Change "or" to "and".

REVISION:

108.8 GUARANTEE AND WARRANTY PROVISIONS:

The Contractor shall guarantee the work against defective workmanship ~~or~~ and materials for a period of one year from the date of its final acceptance under the contract, ordinary wear and tear and unusual abuse or neglect excepted.

2901 West Durango Street Phoenix, Arizona 85009 Phone: 602-506-4760 Fax: 602-506-5969

Case 13-01J

SECTION 301

SUBGRADE PREPARATION

301.1 DESCRIPTION:

This Section shall govern the preparation of natural or excavated areas prior to the placement of sub-base material, pavement, curbs and gutters, driveways, sidewalks or other structures. It shall include stripping and disposal of all unsuitable material including existing pavement and obstructions such as stumps, roots, rocks, etc., from the area to be paved.

301.2 PREPARATION OF SUBGRADE:

With the exception of areas where compacted fills have been constructed as specified in Section 211, in the areas where new construction is required, the moisture content shall be brought to that required for compaction by the addition of water, by the addition and blending of dry, suitable material or by the drying of existing material. The material shall then be compacted to the specified relative density. If pumping subgrade should become evident at any time prior to paving, the Engineer may require proof rolling with a pneumatic-tire roller or other approved equipment in order to identify the limits of the unacceptable area. The proof rolling will be performed at no additional cost to the Contracting Agency.

Subgrade preparation shall also include preparing the subgrade to the required line and grade for paved or unpaved shoulders, tapers, turnouts, and driveways, and at all other project locations where aggregate base and/or select material courses are used in accordance with the Project Plans.

301.2.1 The Contractor may use removed existing asphalt concrete and other existing bituminous roadway surfacing materials originating on the project site, as embankment fill. All materials used shall be thoroughly crushed to sizes not exceeding four inches, or as approved by the Engineer. These asphalt/bituminous materials shall be placed not less than two feet below finished subgrade elevation.

Project earthwork quantities when included as separate contract pay items will include removed asphalt/bituminous material volumes, unless otherwise specified in the Special Provisions.

All unsuitable material and all excess material shall be disposed of in accordance with the requirements of Sections 205.2 and 205.6, respectively. When additional material is required for fill, it shall conform to Section 210.

301.3 RELATIVE COMPACTION:

The subgrade shall be scarified and loosened to a depth of 6 inches. Rock 6-inches or greater in size that becomes exposed due to scarification shall be removed from the scarified subgrade. When fill material is required, a layer of approximately 3 inches may be spread and compacted with the subgrade material to provide a better bond. The subgrade cut and fill areas shall be constructed to achieve a uniform soil structure having the following minimum compaction, measured as a percentage of maximum dry density when tested in accordance with AASHTO T-99, Method A, and T191 or ASTM D6938 with the percent of density adjusted in accordance with the rock correction procedures for maximum density determination, ARIZ-227c to compensate for the rock content larger than that which will pass a No. 4 sieve. Unless otherwise noted in the project plans or project specifications, compaction shall be performed within 2 percentage points of the optimum moisture content.

(A) Below pavement, curb & gutter, attached sidewalk, roadway shoulders, and other areas within right-of-way subject to vehicular traffic	95 percent
(B) Below detached sidewalk not subject to vehicular traffic	85 percent

301.4 SUBGRADE TOLERANCES:

Subgrade upon which pavement, sidewalk, curb and gutter, driveways, or other structures are to be directly placed shall not vary more than 1/4 inch from the specified grade and cross-section. Subgrade upon which sub-base or base material is to be placed shall not vary more than 3/4 inch from the specified grade and cross-section. Variations within the above specified tolerances shall be compensating so that the average grade and cross-section specified are met.

ADD MISSING REFERENCE TO ARIZ-227c

(1) Arizona Department of Transportation test method.

Revised 2012

321.14.2 Core Drilling Device: The core drilling device will be powered by an electrical motor, or by an acceptable gasoline engine. Either device used shall be capable of applying enough effective rotational velocity to secure a drilled specimen. The specimen shall be cored perpendicularly to the surface of pavement, and that the sides of the core are cut in a manner to minimize sample distortion or damage. The machinery utilized for the procedure shall be on a mounted base, have a geared column and carriage that will permit the application of variable pressure to the core head and carriage throughout the entire drilling operation. The carriage and column apparatus shall be securely attached to the base of the apparatus; and the base will be secured with a mechanical fastener or held in place by the body weight of the operator. The core drilling apparatus shall be equipped with a water spindle to allow water to be introduced inside of the drill stem while operating. The cutting edge of the core drill bit shall be of hardened steel or other suitable material with embedded diamond chips in the cutting surface. The core barrel shall be of sufficient diameter to secure a specimen that is a minimum of four or six inches or whichever is prescribed for necessary testing. The core barrel shall not be missing more than one of the teeth used for cutting; if so it shall be discarded and another barrel shall be used. The core barrel shall also be a minimum of two inches longer than the anticipated depth of pavement in accordance with project paving plans.

To

321.14.3 Accessory Equipment: A sufficient supply of ice and dry ice shall be provided to sufficiently cool the pavement prior to securing the samples from the designated areas in the pavement. The ice should also be used to adjust the temperature of the water used to cool the core bit. A water supply (usually a plastic 35 – 55 gal drum) with sufficient hose to introduce the water into and through the spindle of the coring device by gravity feed. The drum should be white or light in color to minimize excessive thermal heating of the water (*for coring of asphalt rubber cores see Note 1*). At no time shall the water utilized in the coring operation exceed 65° F during the coring operation. Ice shall be utilized o ensure the temperature control of the water being introduced during the cutting operation. An ice chest or other suitably insulated container that can maintain a temperature of less than 70° F shall be used to secure the specimens during transport. The container will be equipped with flat shelving that will support the drilled cores throughout the entire specimen dimension during transport back to the testing facility.

Miscellaneous hand tools to remove the drilled specimen from the drill hole or the core barrel taking great care in not disturbing the specimen more than necessary (refer to fig. 1 in ASTM D5361-05).

321.14.4 Process: The pavement surface at the time of coring shall not exceed a temperature of 90° F; the pavement shall be conditioned with ice or dry ice to ensure that this requirement is met. Immediately after it has been ensured that the pavement has dropped to the required temperature, core drilling shall begin. The operator will then apply an even and continuous pressure (Note 2) to penetrate through the full depth of the pavement. The operator will concurrently ensure that enough water is moving over the core surface as to adequately remove any and all cuttings that could damage the drilled core. After the pavement thickness has been penetrated the core shall be carefully removed from either the drill hole or the core barrel and be immediately transferred to an ice chest or other suitable container. Each individual core shall be placed on a shelf in the cooler with the exposed side of the specimen facing down, or the "top side" down. If the specimen is a two lift core, the only acceptable means of separating lifts is with a power or other acceptable wet saw type of equipment (conforming to ASTM D5361-05); however, at no time shall cores be split using a mallet and screwdriver or metal straight edge when being tested for bulk density. Perpendicularity of the specimen shall be checked in the field after the specimen has been extracted from the surface. The core operator shall hold the core up to eye level and place the core top side down in a "speed square" or small carpenters square. The specimen placed in the square shall not depart from perpendicular to the axis more than 0.5° (approximately equivalent to 1/16 of an inch in 6 inches). If the specimen is outside of this distance from square it shall be discarded in the field and another sample cored that falls within tolerance. The cores upon arriving at the laboratory for testing shall be carefully cleaned and measured for thickness in accordance with ASTM D3549. A speed square shall be utilized to measure perpendicularity as compared to a 90° degree angle and shall not depart from perpendicular to the axis more than 0.5° (approximately equivalent to 1/16 of an inch in 6 inches). All remaining testing shall be done within the parameters of the current project and / or agency required specification.

- End of Section -

*Note 1 – It should be noted that when the material to be cored is a rubberized asphalt mixture a wetting agent such as liquid dish soap shall be added to the water barrel to hinder the material from sticking or allowing the binder to spread during coring.

*Note 2 – This refers to pressure exerted on the core barrel and machine during the coring process. Too much pressure can cause damage to the core barrel and the motor; and too little pressure can cause a glazing of the diamonds, reducing cutting efficiency and premature wear of the barrel.

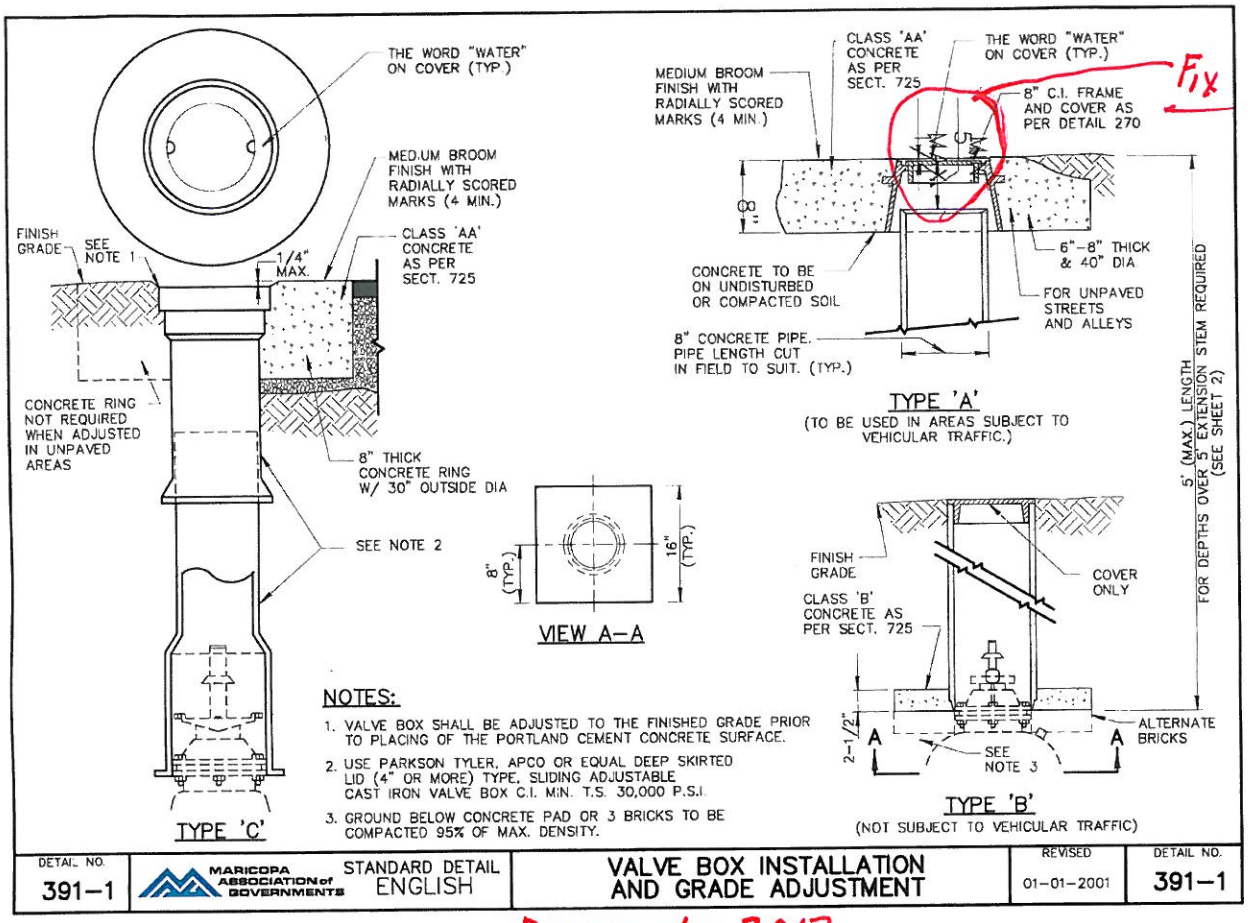

NOTES:

1. VALVE BOX SHALL BE ADJUSTED TO THE FINISHED GRADE PRIOR TO PLACING OF THE PORTLAND CEMENT CONCRETE SURFACE.
2. USE PARKSON TYLER, APCO OR EQUAL DEEP SKIRTED LID (4" OR MORE) TYPE, SLIDING ADJUSTABLE CAST IRON VALVE BOX C.I. MIN. T.S. 30,000 P.S.I.
3. GROUND BELOW CONCRETE PAD OR 3 BRICKS TO BE COMPACTED 95% OF MAX. DENSITY.

DETAIL NO.		STANDARD DETAIL		REVISED	DETAIL NO.
391–1	MARICOPA ASSOCIATION of GOVERNMENTS	ENGLISH	VALVE BOX INSTALLATION AND GRADE ADJUSTMENT	01–01–2001	391–1

DETAIL IN 2013

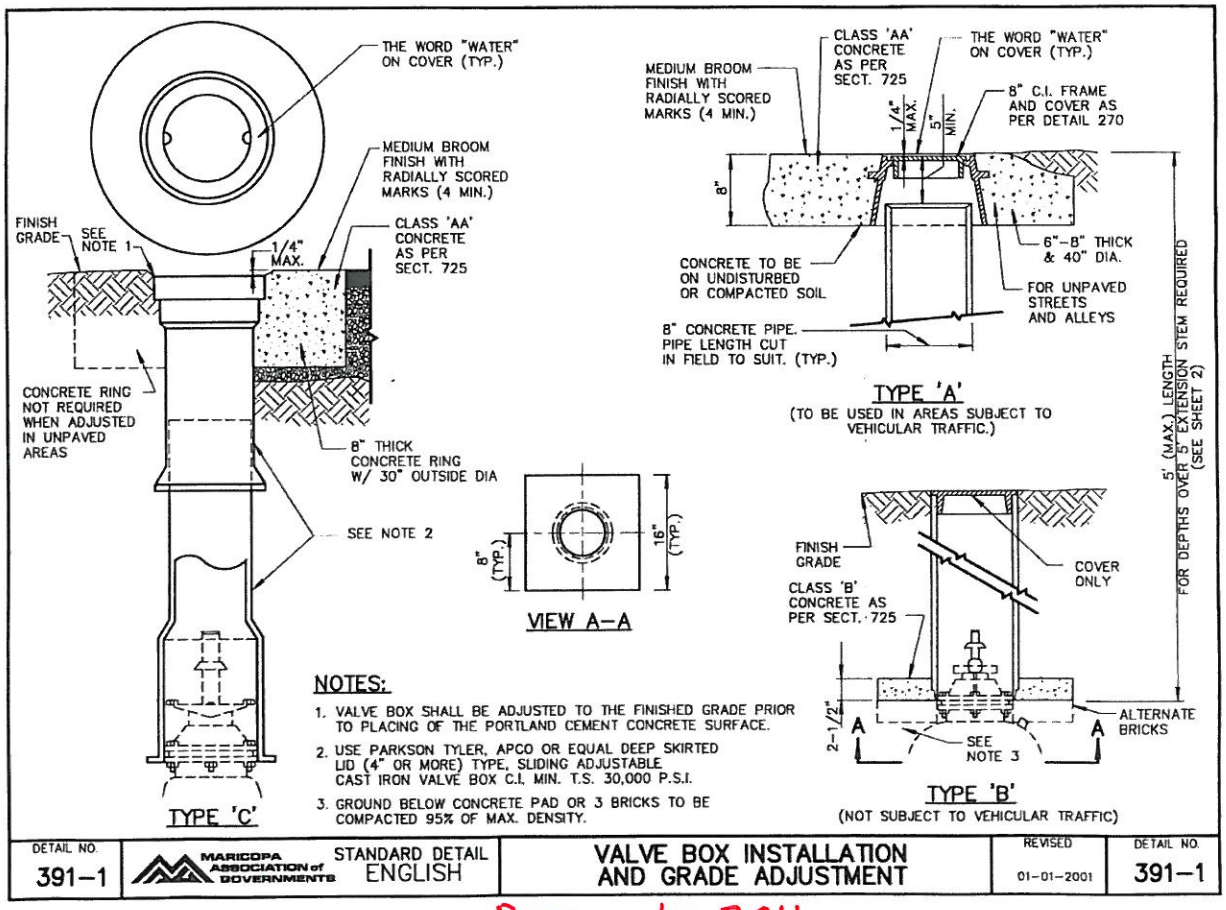

NOTES:

1. VALVE BOX SHALL BE ADJUSTED TO THE FINISHED GRADE PRIOR TO PLACING OF THE PORTLAND CEMENT CONCRETE SURFACE.
2. USE PARKSON TYLER, APCO OR EQUAL DEEP SKIRTED LID (4" OR MORE) TYPE, SLIDING ADJUSTABLE CAST IRON VALVE BOX C.I. MIN. T.S. 30,000 P.S.I.
3. GROUND BELOW CONCRETE PAD OR 3 BRICKS TO BE COMPACTED 95% OF MAX. DENSITY.

DETAIL NO.		STANDARD DETAIL		REVISED	DETAIL NO.
391–1	MARICOPA ASSOCIATION of GOVERNMENTS	ENGLISH	VALVE BOX INSTALLATION AND GRADE ADJUSTMENT	01–01–2001	391–1

DETAIL IN 2011

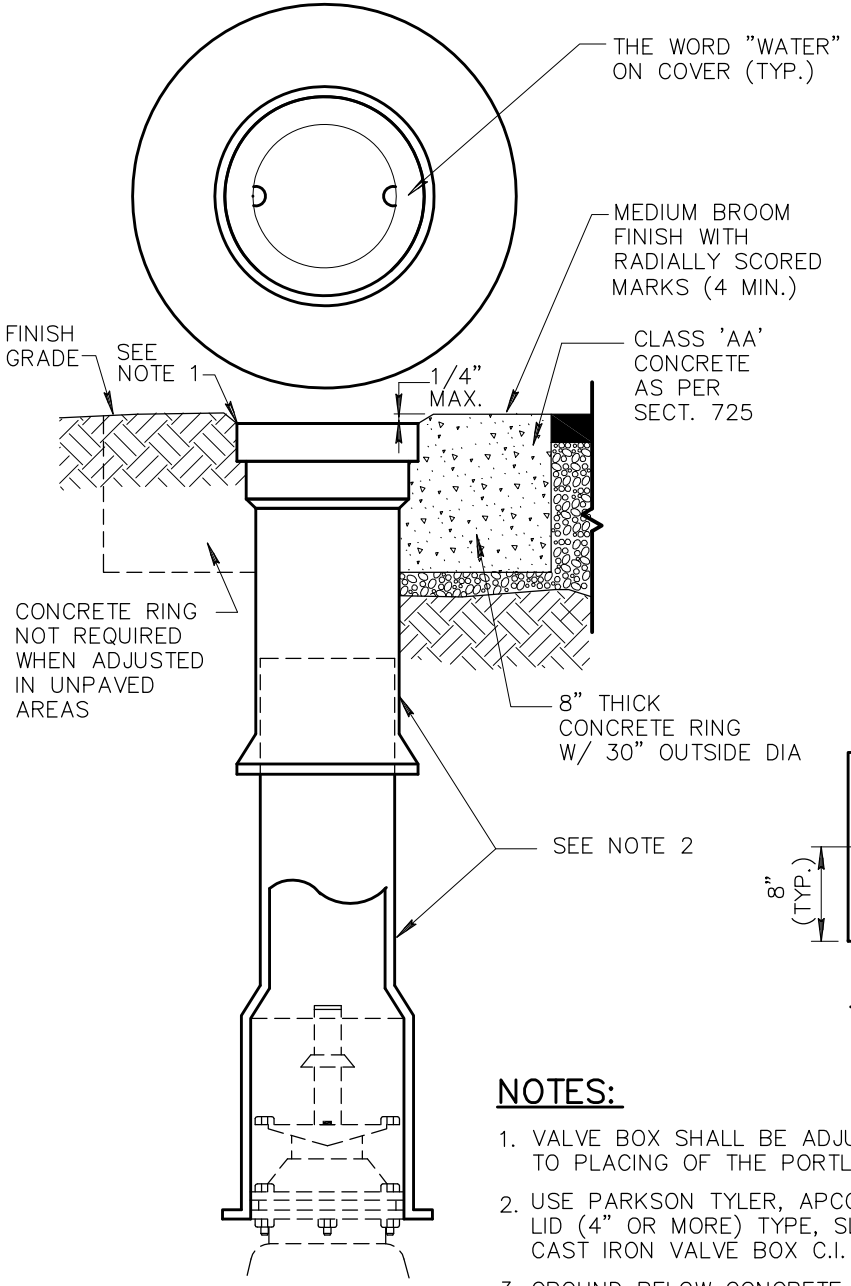

TYPE 'C'

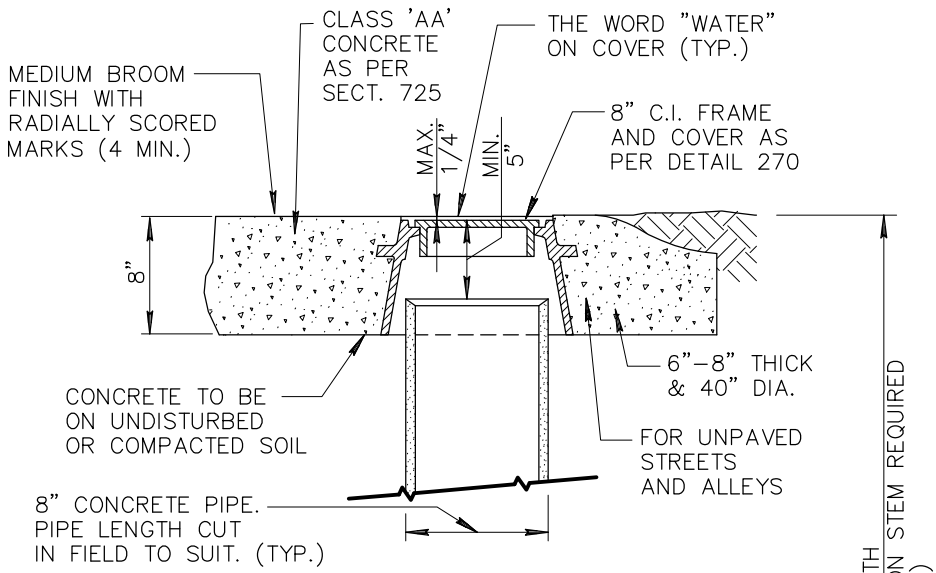

TYPE 'A'

(TO BE USED IN AREAS SUBJECT TO VEHICULAR TRAFFIC.)

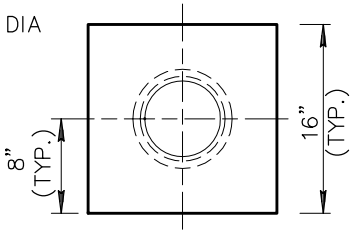

VIEW A–A

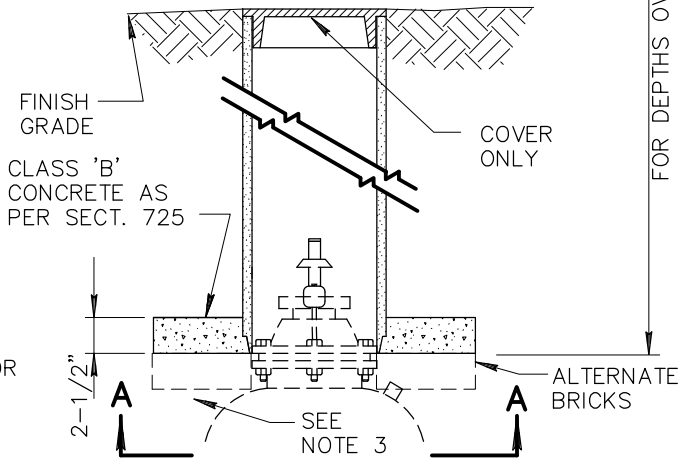

TYPE 'B'

(NOT SUBJECT TO VEHICULAR TRAFFIC)

NOTES:

1. VALVE BOX SHALL BE ADJUSTED TO THE FINISHED GRADE PRIOR TO PLACING OF THE PORTLAND CEMENT CONCRETE SURFACE.
2. USE PARKSON TYLER, APCO OR EQUAL DEEP SKIRTED LID (4" OR MORE) TYPE, SLIDING ADJUSTABLE CAST IRON VALVE BOX C.I. MIN. T.S. 30,000 P.S.I.
3. GROUND BELOW CONCRETE PAD OR 3 BRICKS TO BE COMPACTED 95% OF MAX. DENSITY.

DETAIL NO.				REVISED	DETAIL NO.
391–1	MARICOPA ASSOCIATION of GOVERNMENTS	STANDARD DETAIL ENGLISH	VALVE BOX INSTALLATION AND GRADE ADJUSTMENT	01–01–2014	391–1

SECTION 735

REINFORCED CONCRETE PIPE

735.1 GENERAL:

These specifications cover reinforced concrete pipe and related structures intended to be used for conveyance of sewage, industrial waste, and storm and irrigation water.

furnished

The size, type, and D-load of the concrete pipe to be ~~finished~~ shall be as shown on the plans, or as specified under the item of work for the project of which the pipe is a part and shall be for pipe installed by the open-cut method of construction.

When specified in the special provisions, four sets of pipe line layout drawings shall be furnished to the Engineer prior to the manufacture of the concrete pipe. Catch basin connector pipe need not be included in the pipe line layout; however, pipe stubs shall be included. In lieu of including catch basin connector pipe in the pipe layout, a list of catch basin connector pipes shall accompany the layout. The connector pipe list shall contain the following information.

(A) Size and D-load of pipe.

(B) Station at which pipe joins main line.

(C) Number of section of pipe, length of section, type of sections (straight, horizontal bevel, vertical bevel, etc.).

The pipe layouts will be used by the Contracting Agency for reference only, but their use shall in no way relieve the Contractor of the responsibility for the correctness of the layout.

(D) All pipe installed in tunnels shall be ASTM C76, Class III. Pipe stronger than that specified may be furnished at the Contractor's option, and at no additional cost to the Contracting Agency, provided such pipe conforms in all other respects to the applicable provisions of these specifications.

Whatever struts or other protective methods proved necessary to furnish and install the pipe to meet the limitation of cracks as specified herein, shall be provided and maintained throughout pipe handling and transportation.

735.2 QUALITY:

Reinforced concrete pipe shall be manufactured and tested in conformance with the requirements of ASTM C76, except as modified herein.

All reinforced concrete pipes less than 36 inch inside diameter shall include an area of reinforcing steel in the bell not less than the area required for the circumferential reinforcement in the wall of the pipe.

735.3 CURVES, BENDS AND CLOSURES:

Horizontal and vertical long-radius curves shall be formed by bevel adapters or by beveling the straight pipe joint. The bevel of the pipe shall not exceed 5 degrees and the total angular deflection, for beveled pipe, shall not exceed 10 degrees. Small angular changes may be made with straight pipe provided that the joint opening does not exceed 3/4 inch. Short radius curves and closures shall be formed with fabricated specials; however, the angular deflection of any segment of the fabricated section shall not exceed 10 degrees.

735.4 MATERIALS:

Except when otherwise permitted by the Engineer, no materials other than water, Portland cement, Pozzolanic materials, mineral aggregates and steel shall be used in the manufacturing of the pipe, conforming to ASTM C76, with the following exceptions:

(A) Portland Cement: Portland cement shall comply with ASTM C150, Type II, and low alkali. The pipe manufacturer shall supply a cement mill certificate in triplicate for each load of cement delivered, showing the specification, type, chemical analysis, and quantity. In lieu of the above, on stockpiled pipe the manufacturer shall certify that the type of cement used meets

MARICOPA COUNTY
Department of Transportation

MEMORANDUM

Date: March 18, 2013 Revised 7/8/2013

To: MAG Specifications and Details Committee

From: Robert Herz, MCDOT Representative

Subject: Revision to Section 321.8.8 Thickened Edge Case 13-08

PURPOSE: Eliminate references to 'base course' to clarify the surface being referenced, increase the depth of asphalt thickened edge that can be placed with the asphalt pavement, and to delete an unnecessary Contractor submittal.

REVISIONS:

Proposed changes:

321.8.8 Thickened Edge: ~~Prior to commencing paving operations that require construction of a thickened edge, the Contractor shall submit for the Engineer's approval construction procedures to be used for placement and compaction of the thickened edge.~~

When the depth of the thickened edge extends ~~two~~ four inches or more below the bottom of the asphalt pavement ~~base course~~, the portion of the thickened edge extending below the asphalt pavement ~~base course~~ shall be placed and compacted prior to placement of the asphalt pavement. Placement of tack coat on the surface of the compacted thickened edge asphalt may be omitted when additional asphalt pavement is placed on the same day and the Engineer agrees that the surface of the thickened edge asphalt has remained clean.~~as a separate construction operation. Construction of the base course may immediately follow compaction of the lower portion of the thickened edge.~~

When the depth of the thickened edge extends less than ~~two~~ four inches below the bottom of the asphalt pavement ~~base course~~, the portion below the asphalt pavement ~~base course~~ may be placed and compacted with the asphalt pavement ~~base course~~ in a single operation.

Proposed Modified Specification in final form:

321.8.8 Thickened Edge: When the depth of the thickened edge extends four inches or more below the bottom of the asphalt pavement, the portion of the thickened edge extending below the asphalt pavement shall be placed and compacted prior to placement of the asphalt pavement. Placement of tack coat on the surface of the compacted thickened edge asphalt may be omitted

2901 West Durango Street Phoenix, Arizona 85009 Phone: 602-506-4760 Fax: 602-506-5969

when additional asphalt pavement is placed on the same day and the Engineer agrees that the surface of the thickened edge asphalt has remained clean.

When the depth of the thickened edge extends less than four inches below the bottom of the asphalt pavement, the portion below the asphalt pavement may be placed and compacted with the asphalt pavement in a single operation.

1200 S
LeeBoy
PATCHING

SECTION 321 CASE 13-09 rev 7-29-13

PLACEMENT AND CONSTRUCTION OF ASPHALT CONCRETE PAVEMENT

321.1 DESCRIPTION:

This section is to provide specifications for furnishing all materials, mixing at a plant, hauling and placing a mixture of aggregate materials, mineral admixture and asphalt binder to form a pavement course for placement upon a previously prepared base or sub base.

321.2 MATERIALS AND MANUFACTURE:

The materials shall conform to Section 710 for the type specified. The specific required mix type shall be called out in the contract documents or as directed by the Engineer.

321.3 WEATHER AND MOISTURE CONDITIONS:

Asphalt concrete shall be placed only when the surface is dry, and when the atmospheric temperature in the shade is 40 degrees F. (50 degrees F for Asphalt Concrete lift less than 2 inch thick) or above. No asphalt concrete shall be placed when the weather is foggy or rainy, or when the base or sub base on which the material is to be placed is unstable. Asphalt concrete shall be placed only when the Engineer determines that weather conditions are suitable.

321.4 APPLICATION OF TACK COAT:

A tack coat shall be applied to all existing and to each new course of asphalt concrete prior to the placing of a succeeding lift of asphalt concrete. The tack coat may be deleted when a succeeding layer of asphalt concrete is being applied over a freshly laid course that has been subjected to very little traffic when approved by the Engineer.

The application of the tack coat shall comply with Section 329. The grade of emulsified asphalt shall be SS-1 h or CSS-1 h as specified in Section 713.

The same material that is specified above for the tack coat shall be applied to the vertical surfaces of existing pavements, curbs, and gutters, against which asphalt concrete is to be placed.

The surface to be covered may require repair or patching as directed by the Engineer. This shall be addressed in the project specifications prior to the bidding of the project.

321.5 MIX DESIGN

The mix design shall be submitted to the Engineer at least five working days prior to the start of asphalt concrete production. Mix designs provided by the agency may be utilized on projects at the Engineer's discretion. The Engineer will review and approve the mix design to assure it contains all of the required information as outlined in Section 710.3.1. The target values for gradations, binder contents, and air voids will be established as the accepted Job Mix Formula (JMF) based upon the mix design. Mix designs not containing all of the information will be returned within five working days of receipt of all mix design information, for action and resubmission by the contractor.

Once the mix design has been approved by the agency and the mixing plant selected, the Contractor and/or his supplier shall not change plants nor utilize additional mixing plants without prior approval of the Engineer.

If the contractor elects to change its source of material, the contractor shall furnish the Engineer with a new mix design, which meets the requirements of Section 710, as amended by the Project Specifications.

The contractor may make self-directed target changes to the approved mix design within the limits shown below. Requests for self-directed target changes shall be made in writing and acknowledged by the Engineer prior to the start of production of a lot and will remain in effect until such time as any additional changes are implemented. The self-directed target changes must meet the contract requirements for mix design criteria and gradation limits.

TABLE 321-1 ALLOWABLE SELF-DIRECTED TARGET CHANGES	
MEASURED CHARACTERISTICS	ALLOWABLE SELF-DIRECTED TARGET CHANGES
Gradation (Sieve Size)	
3/8 inch	± 4% from mix design target value
No 8	± 4% from mix design target value
No 40	± 2% from mix design target value
No 200	+0.5% from mix design target value
Binder Content	± 0.2% from mix design target value
Effective Air Voids	None

The contractor may propose target changes, other than self-directed changes, to the approved mix design for the approval of the Engineer. The Engineer will determine if the proposed target change will result in mix production that meets the contract requirements for mix design criteria and gradation limits. The target changes will not be retroactive for the purpose of acceptance.

321.6 MIX PRODUCTION:

All materials shall be proportioned by weight in a hot mix asphalt plant in the proportions required by the mix design to provide a homogeneous and workable mass. Each hot mix asphalt plant shall be inspected in accordance with the provisions contained in the 'Hot Mix Asphalt Production Facilities' by the Arizona Rock Products Association and shall have a current inspection certificate. All measuring devices shall be calibrated at least annually by a technician licensed by the Arizona Bureau of Weights & Measures. Mixing plants shall conform to the requirements of AASHTO M-156, except as modified herein.

In drum mix plants the mineral admixture shall be added and thoroughly mixed with the mineral aggregate by means of a mechanical mixing device prior to the mineral aggregate and mineral admixture entering the dryer. The moisture content of the combined mineral aggregate shall be a minimum of three percent by weight of the aggregate during the mixing process.

For drum-mix plants, the mineral admixture shall be weighed across a weight belt, or other approved alternative weighing system, with a weight totalizer prior to entry into the mechanical mixing device. The mechanical mixing device shall be a pugmill type mixer that is in good working condition. The rate of the aggregate feed shall not exceed the mixing device's capacity in ton per hour. The mixer shall be constructed to minimize the loss of mineral admixture and shall be located in the aggregate delivery system at a location where the mixed material can be readily inspected. The mixing device shall be capable of effective mixing in the full range of the asphalt concrete production rates.

The hot plant and equipment shall be constructed and operated to prevent loss of mineral admixture through the dust collection system of the plant.

A positive signal system shall be provided and utilized during production whereby the mixing shall automatically be stopped if the mineral admixture is not introduced into the mineral aggregate. The plant will not be permitted to operate unless the signal system is in good working condition.

The introduction of bituminous material shall be controlled by an automated system fully integrated with the controls or the mineral aggregate and mineral admixture. The production of the plant shall be controlled by the rate required to obtain a uniform mixture of all components. Drying and heating shall be accomplished in such a manner as to preclude the mineral admixture from becoming coated with un-spent fuel. The completed asphalt concrete may be held in storage for up to 12 hours in insulated or heated silos, providing the minimum temperature noted herein for placement and compaction is met behind the placement device. If the Engineer determines that there is an excessive amount of heat, heat loss, drain down, segregation and/or oxidation of the mixture due to temporary storage, use of surge bins or storage bins will be discontinued.

The temperature of the asphalt concrete, with unmodified binders, upon discharge from the mixer shall not exceed 335 degrees F. The discharge temperature may be increased on the recommendation of the binder supplier, when approved by the Engineer. If the asphalt concrete is discharged from the mixer into a hopper, the hopper shall be constructed so that segregation of the asphalt concrete will be minimized.

321.7 TRANSPORTATION:

Petroleum distillates or other substances that will have a detrimental effect on the asphalt concrete shall not be used as a release agent.

The beds of all transportation units shall be clean and smooth to allow the free flow of material into the paving machine's hopper.

Tarpaulins shall be furnished on all trucks and used when weather condition warrant, or if directed by the Engineer.

321.8 PLACEMENT:

321.8.1 Placing: All courses of asphalt concrete shall be placed and finished by means of a self-propelled paving machine equipped with an automatically actuated control system, except under certain conditions or at locations where the Engineer deems the use of a self-propelled paving machine impracticable.

The control system shall control the elevation of the screed at each end by controlling the elevation of one end directly and the other end indirectly either through controlling the transverse slope or alternatively when directed, by controlling the elevation of each end independently.

The control system shall be capable of working with one of the following devices:

(a) Ski or non-contact device of not less than 30 feet in length, supported throughout its entire length
(b) Taut stringline or wire set to grade
(c) Short ski or sonar sensing units from curb control
(d) Joint matching shoe

Failure of the control system to function properly shall be cause for the suspension of asphalt concrete production. In order to achieve a continuous operation, the speed of the paving machine shall be coordinated with the hot mix plant and transport units.

If the asphalt concrete is dumped from the hauling vehicles directly into the paving machine, care shall be taken to avoid jarring the machine or moving it out of alignment. No vertical load shall be exerted on the paving machine by the truck.

If asphalt concrete is dumped upon the surface being paved and subsequently loaded in the paving machine, the loading equipment shall be self-supporting and shall not exert any vertical load on the paving machine. Substantially all of the asphalt concrete shall be picked up and loaded into the paving machine.

Self-propelled paving machines shall spread the mixture without segregation or tearing, true to line, grade and crown indicated on the Project plans. Pavers shall be equipped with hoppers and augers that will distribute the mixture uniformly in front of an adjustable floating screed. The raising of the hopper wings must be minimized and the paving machine will not be operated when in an empty condition.

Screeds shall include any strike-off device operated by tamping or vibrating action which is effective, without tearing, shoving or gouging the mixture and which produces a course with a uniform texture and density for the full width being paved. Screeds shall be adjustable as to height and crown and shall be equipped with a controlled heating device for use when required. In the case of the screed, auger extensions and vibrators shall be installed wherever the screed is extended more than one (1) foot beyond the end of the base auger or auger extension. However, when placing material against an extremely uneven curb or edge over a short distance, the Engineer may waive the auger extensions and vibrators.

At any place not accessible to the roller, the mixture shall be thoroughly compacted with tampers to provide a uniform and smooth layer over the entire area compacted in this manner.

321.8.2 Joints: Transverse joints, before a surface course is placed in contact with a cold transverse construction joint, the cold existing asphalt concrete shall be trimmed to a vertical face for its full depth and exposing a fresh face. After placement and finishing the new asphalt concrete, both sides of the joint shall be dense and the joint shall be smooth and tight. The surface in the area of the joint shall not deviate more than 1/4 inch from a 12-foot straightedge, when tested with the straightedge placed across the joint, parallel to the centerline.

Longitudinal Joints of each course shall be staggered a minimum of 6 inches with relation to the longitudinal joint of the immediate underlying course cold transverse construction joint, the cold existing asphalt concrete shall be trimmed to a vertical face for its full depth and exposing a fresh face. The fresh face shall be tacked prior to placement of the adjacent course. After placement and finishing the new asphalt concrete, both sides of the joint shall be dense and the joint shall be smooth and tight. The surface in the area of the joint shall not deviate more than ¼ inch from a 12-foot straightedge, when tested with the straightedge placed across the joint, parallel to the centerline. The joint will be tack coated if required by the Engineer.

321.8.3 Asphalt Leveling Course: A leveling course shall be used when specified, or as directed in writing by the Engineer, to bring existing pavement to a uniform grade prior to placing an overlay or other course. If a leveling course is being applied on an Asphalt surface, a tack coat shall be applied. The compaction requirements contained in Section 321.10 do not apply to leveling courses.

321.8.4 Compaction; Asphalt Base Course and Surface Course: It is the contractor's responsibility to perform any desired Quality Control monitoring and/or testing during compaction operations to achieve the required compaction. The temperature of the asphalt concrete immediately behind the laydown machine shall meet the minimum requirements of Table 321-2. A probe type electronic thermometer with a current calibration sticker attached will be used to measure the temperature of the asphalt concrete mixture. When measuring the temperature of the mat, the probe shall be inserted at mid-depth and as horizontal as possible to the mat.

TABLE 321-2

MINIMUM ASPHALT CONCRETE PLACEMENT TEMPERATURE

Base (1) Temp (°F)	Mat Thickness (inches)					
	1/2	3/4	1	1 1/2	2	3 and greater
40 – 50	---	---	310	300	285	275
50 – 60	---	310	300	295	280	270
60 – 70	310	300	290	285	275	265
70 – 80	300	290	285	280	270	265
80 – 90	290	280	270	270	265	260
+90	280	275	265	265	260	255

(1) Base on which mix is to be placed

Asphalt compaction equipment shall be of sufficient size and weight to accomplish the required compaction. All compaction equipment shall be operated and maintained in accordance with the manufacturer's recommendations and the project requirements. During the rolling operation, the speed of the roller shall not exceed 3 miles per hour, unless otherwise approved by the Engineer.

Pneumatic tired compactors shall be equipped with skirt-type devices mounted around the tires so that the temperature of the tires will be maintained during the compaction process.

The Engineer will determine the acceptability of the pavement compaction in accordance with Section 321.10.

321.8.5 Smoothness: The completed surfacing shall be thoroughly compacted, smooth and true to grade and cross-section and free from ruts, humps, depressions or irregularities. An acceptable surface shall not vary more than one-fourth (¼) inch from the lower edge of a 12-foot straightedge when the straightedge is placed parallel to the centerline of the roadway.

321.8.6 Asphalt Concrete Overlay: Asphalt concrete overlay consists of the placing and compacting plant mix asphalt concrete over existing asphalt concrete paving. The thickness of the overlay shall be as shown on the plans or as specified in the special provisions. Preliminary preparation of existing surfaces will be required except when accomplished by the Contracting Agency, and it is so stipulated in the special provisions. With the exception of those which have been preheated and remixed only, existing surfaces shall receive a tack coat.

Asphalt concrete mix aggregate gradation and percentage of asphalt binder shall be in accordance with Section 710 using a 1/2-inch Marshall-Low Traffic asphalt concrete mix designation for overlay more than one and one-half inch in thickness and a 3/8-inch Marshall-Low Traffic asphalt concrete mix designation for overlay one and one-half inch or less in thickness, unless otherwise shown or specified in the special provisions.

Except when they have been preheated and remixed, pavement surfaces shall be prepared as follows:

(a) Before placing asphalt concrete overlay, severely raveled areas or cracked areas that are depressed more than 3/4-inch from the adjoining pavement shall be cut out and patched at least 48 hours prior to the resurfacing operation. Over-asphalted areas or rough high spots shall be either milled or cut out and patched. Large shrinkage cracks shall be filled with asphalt sealing compound acceptable to the Engineer. The entire surface shall be cleaned with a power broom. Raveled areas that do not require removing shall be cleaned by hand brooming. The above are incidental, and the cost thereof shall be included in the bid items.

(b) Before placing asphalt concrete overlay, milling shall be done as shown on the plans or specified in the special provisions and shall be in accordance with Section 317.

(c) After surfaces have been prepared to the satisfaction of the Engineer, they shall receive a tack coat per Section 321.4. Traffic will not be permitted to travel over surfaces which have received a tack coat. When the overlay is to extend onto the concrete gutter, the gutter shall be thoroughly cleaned of loose dust and cement particles and shall be tack coated.

Asphalt concrete overlay shall be placed as specified in Section 321.8.1 and compacted as specified in Section 321.8.4. The surface smoothness shall meet the tolerances specified in Section 321.8.5.

Manholes shall be built up and the frames set flush with the finished surface of the new paving, and tops of valve boxes, clean-outs and other existing structures shall be adjusted to finish grade. In the event the base course and original paving have been removed or disturbed in order to build up the manhole, they shall be replaced with approved materials which shall be thoroughly compacted. The asphalt concrete around the manhole frame shall be completed and made flush with the adjacent overlay.

321.8.7 Pavement Fabric Interlayer: Pavement fabric interlayer shall be used only when specified on the plans or in the specifications.

Pavement fabric interlayer shall be in accordance with Table 796-1 and be the class designated on the plans or in the specifications.

Asphalt binder coat used to bond the fabric to the pavement shall be paving asphalt PG 70-10 asphalt cement conforming to the requirements of Section 711. The application and distributing equipment for the asphalt binder shall conform to the requirements of Section 330. The asphalt binder coat shall be uniformly spray applied to the prepared pavement surface at the rate of 0.20 gallons per square yard for Class B fabric or at the rate of 0.25 gallons per square yard for Class A fabric. Some underlying surfaces may require a higher or lower application rate. A test strip may be necessary to determine the proper application rate. The width of liquid asphalt cement application shall be the fabric width, plus six inches.

Neither the asphalt binder coat or fabric interlayer shall be placed when weather conditions, in the opinion of the Engineer, are not suitable. The asphalt binder and fabric interlayer shall only be placed when the pavement is dry, the ambient air temperature is 50 degrees F and rising, and pavement temperature is 40 degrees F and rising.

Equipment for placing the fabric shall be mechanized and capable of handling full rolls of fabric. The equipment shall be able to lay the fabric smoothly to maximize pavement contact and remove air bubbles. Stiff bristle brooms shall be used to smooth the fabric. The equipment used to place the fabric shall be in good working order and is subject to approval by the Engineer.

Pavement fabric interlayer shall not be placed if the in-place binder is hotter than 325 degrees F or has cooled to 180 degrees F or below (as determined by non-contact thermometer).

Pavement fabric interlayer shall be placed onto the asphaltic binder with the heat bonded side up with a minimum amount of wrinkling or folding. Remaining wrinkles or folds 1-inch and larger shall be removed or slit and shingle-lapped in the direction of paving. Burning or torching of wrinkles is not allowed. Fabric shall overlap three to six inches to insure full closure of the joint. Transverse joints shall be shingle-lapped in the direction of paving to prevent edge pickup by the paver. A second application of hand-placed asphalt binder may be required at laps and repairs as determined by the Engineer to ensure proper binding of the narrow double fabric layer.

All areas where fabric has been placed shall be paved with asphaltic concrete during the same workshift. Placement of the asphaltic concrete shall closely follow fabric lay down. The temperature of the asphaltic concrete immediately behind the laydown machine shall not exceed 325 degrees F. In the event that the asphalt binder coat bleeds through the fabric causing construction problems before the overlay is placed, the affected areas shall be sanded with a sand blotter in compliance with Section 333. Excess sand shall be removed before beginning the paving operation. In the event of rainfall prior to the placement of the asphaltic concrete, the fabric shall be allowed to dry before the asphalt concrete is placed.

Turning of the paving machine or of other vehicles on the fabric shall be gradual and kept to a minimum to avoid damage to the fabric. Should equipment tires stick to the fabric during pavement operations, small quantities of paving asphalt concrete shall be broadcast on the fabric to prevent pick-up. Decrease of binder rate in order to minimize pick-up on tires is not allowed.

321.8.8 Thickened Edge: Prior to commencing paving operations that require construction of a thickened edge, the Contractor shall submit for the Engineer's approval construction procedures to be used for placement and compaction of the thickened edge.

When the depth of the thickened edge extends two inches or more below the bottom of the asphalt pavement base course, the portion below the base course shall be placed and compacted as a separate construction operation. Construction of the base course may immediately follow compaction of the lower portion of the thickened edge.

When the depth of the thickened edge extends less than two inches below the bottom of the asphalt pavement base course, the portion below the base course may be placed and compacted with the base course in a single operation.

321.8.9 Safety Edge: The finished safety edge slope shall be planar forming a 30° ± 5° angle with the adjacent roadway surface and extend a minimum of five inches (5") below the roadway pavement's finished surface.

The safety edge shall be constructed with the top or final paving lift of a new pavement or overlay using a device that is mounted to or is a part of the screed portion of the laydown machine. The safety edge device shall be capable of constraining the asphalt concrete material to increase density of the extruded profile by reducing the volume. A conventional single strike-off plate is not acceptable. Compaction obtained from the extruded safety edge shall be acceptable when the extruded shape conforms to the specified shape.

During laydown operations if the extruded safety edge does not conform to the specified shape, the Contractor shall take immediate actions to correct the deficiency and to repair all non-compliant sections of safety edge. The Contractor shall stop paving operations until corrections to the laydown operation have been made and resumption of paving is approved by the Engineer or his designated representative.

321.9 QUALITY CONTROL:

It is the contractor's responsibility to perform Quality Control monitoring and/or testing during asphalt concrete production to achieve the required compaction and to perform Quality Control monitoring and/or testing during asphalt concrete production to achieve the required mix properties. The Engineer may obtain samples of any portion of any material at any point of the operations for his own use. Also, the Engineer may order the use of any drying, proportioning and mixing equipment or the handling of any material discontinued which, in his/her opinion, fails to produce a satisfactory mixture.

The asphalt concrete produced shall conform to the requirements of the production tolerances established in section 321.10. When the asphalt concrete does not conform to the production tolerances, it shall be reported to the Engineer, and corrective quality control measures shall be implemented, or production shall cease immediately at no additional cost to the contracting Agency or Engineer.

321.10 ACCEPTANCE:

321.10.1 Acceptance Criteria: Unless otherwise specified, asphalt concrete will be divided into lots for the purpose of acceptance. A lot shall be considered to be one day's production. When the quantity of asphalt concrete placed in a day exceeds 500 tons but is less than 2000 tons, the lot shall be divided into 500 ton sublots or fraction thereof. Where the quantity of asphalt concrete placed in a day exceeds 2000 tons, the day's production will be divided into four (4) approximately equal sublots. A minimum of one sample will be obtained from each lot. Tests used to determine acceptance

will be performed by the Engineer or a laboratory employed by the Engineer. In either case the laboratory shall be accredited by the AASHTO Accreditation Program (AAP), for the tests being performed. The acceptance laboratory will take representative samples of the asphalt

concrete from each sublot to allow for gradation, binder content, air voids, pavement thickness and compaction of base and surface course. Each sublot will be accepted based upon the test data from the sample(s) from that sublot. All acceptance samples shall be taken using random locations or times designated by the Engineer in accordance with ASTM D3665.

321.10.2 Gradation, Binder Content and Air Voids: The acceptance laboratory will take a sample of the asphalt concrete in accordance with the requirements of Section 2 or 4 of Arizona Test Methods 104 or AASHTO T-168 from each sublot. The minimum weight of the sample shall be 45 pounds. Asphalt binder content and gradation shall be determined in accordance with AASHTO T-308 using the ignition furnace for each sublot. The acceptance laboratory is responsible for obtaining the necessary materials and performing an ignition furnace calibration as outlined in AASHTO T-308 for each asphalt concrete mixture utilized on the project. The correction factor used for each test shall be clearly indicated on the report. The bulk density for Marshall Mix designs shall be tested in accordance with AASHTO T-245. The bulk density for Gyratory mix designs shall be determined in accordance with AASHTO T-312. The maximum theoretical density shall be determined in accordance with the requirements of AASHTO T-209 including fan drying per AASHTO T209 Section 15. Effective voids of the laboratory compacted specimens will be determined at a minimum of once per lot in accordance with the requirements of AASHTO T-269. Should the testing for effective air voids not meet the "Full Payment" or "No Corrective Action" requirements of Table 321-5, additional testing for laboratory air voids on the remaining sublots will be performed as necessary to determine the extent of the deficiency. Acceptance testing results will be furnished to the contractor and the supplier within five working days of receipt of samples by the acceptance laboratory.

During production, the allowable deviations from the mix design gradation targets are listed in the tables below. The allowable production tolerances may fall outside of the mix design gradation bands.

TABLE 321-3A
GRADATION ACCEPTANCE LIMITS FOR MARSHALL MIXES

Sieve Size	3/8 inch Mix	1/2 inch Mix	3/4 inch Mix	Base Mix
1 inch	---	---	---	±7%
3/4 inch	---	---	±7%	±6%
1/2 inch	---	±7%	---	---
3/8 inch	±7%	±6%	±6%	±6%
No. 8	±6%	±6%	±6%	±6%
No. 40	±4%	±4%	±4%	±4%
No. 200	±2%	±2%	±2%	±2%

TABLE 321-3B
GRADATION ACCEPTANCE LIMITS FOR GYRATORY MIXES

Sieve Size	3/8 inch Mix	1/2 inch Mix	3/4 inch Mix
3/4 inch	---	---	±7%
1/2 inch	---	±7%	±6%
3/8 inch	±7%	±6%	---
No. 8	±6%	±6%	±6%
No. 40	±4%	±4%	±4%
No. 200	±2%	±2%	±2%

If the results from a single acceptance sample fall outside of the acceptance limits in Table 321-3A or 321-3B as applicable, a second sample shall be taken and if the second acceptance sample is also outside of the acceptance limits the Contractor shall cease production of asphalt concrete. Production shall not begin again until calibration test results verify that adjustments made to materials or proportions yield a gradation that falls within acceptance limits in Table 321-3A or 321-3B as applicable.

If the asphalt binder content is within ± 0.40% of the mix design target value, the asphalt concrete will be paid for at the

contract unit price. If the asphalt binder content deviates by more than ± 0.40% from the mix design target value, the deficient area will be evaluated within the sublot by coring at maximum intervals of 100 feet from the deficient sample. The asphalt content of the original deficient sample will be averaged with the asphalt binder content of the cores taken for re-evaluation to determine compliance with the acceptance requirements. If the resulting average of the asphalt binder content deviates by more than ±

0.40% from the mix design target value, then Table 321-4 shall apply to the sublot. Additional cores may be required to define the limits of the deficient area, and shall not be used for re-evaluating acceptance.

~~TABLE 321-4~~		
~~ASPHALT BINDER CONTENT ACCEPTANCE AND PENALTIES~~		
~~Deviation from that permitted~~	~~When the contracting agency is the owner: Payment Reduction ($ per ton of asphalt concrete)~~	~~When the contracting agency is not the owner (i.e. permits): Corrective Action~~
~~Over 0.0 to 0.1% points~~	~~$2.00~~	~~EA (see 321.10.6)~~
~~Over 0.1 to 0.2% points~~	~~$6.00~~	~~EA (see 321.10.6)~~
~~Over 0.2% points~~	~~Removal* or EA per 321.10.6~~	~~Removal* or EA per 321.10.6~~

TABLE 321-4		
ASPHALT BINDER CONTENT ACCEPTANCE AND PENALTIES		
Deviation from that permitted	When the contracting agency is the owner: Payment Reduction ($ per ton of asphalt concrete)	When the contracting agency is not the owner (i.e. permits): Corrective Action
Over 0.2% above that permitted	Removal* or EA	Removal* or EA
Over 0.1% to 0.2% above that permitted	$6.00	EA
Over 0.0% to0.1% above that permitted	$2.00	EA
Within permitted range	Full Payment	Full Payment
Over 0.0% to0.1% below that permitted	$2.00	EA
Over 0.1% to 0.2% below that permitted	$6.00	EA
Over 0.2% below that permitted	Removal* or EA	Removal* or EA

NOTES: *The Contractor shall remove and replace the entire sublot that is deficient
EA = Engineering Analysis per Section 321.10.6

If the laboratory air voids fall within a range of 2.8% to 6.2%, the asphalt concrete will be paid for at the contract unit price. If the laboratory air voids are outside of this range, the deficient area will be evaluated within the sublot by coring at maximum intervals of 100 feet from the deficient sample. The laboratory air voids of the original deficient sample will be averaged with the laboratory air voids obtained from each of the cores taken for re-evaluation to determine compliance with the acceptance requirements. If the resulting average of the laboratory air voids is outside the indicated range, then Table 321-5 shall apply to the sublot. Additional cores may be required to define the limits of the deficient area, and shall not be used for re-evaluating acceptance.

~~TABLE 321-5~~		
~~LABORATORY VOIDS ACCEPTANCE AND PENALTIES~~		
~~Laboratory Air Voids (Measured at N_{des} or 75 blows as applicable)~~	~~When the contracting agency is the owner:~~ ~~Payment Reduction~~ ~~($ per ton of asphalt concrete)~~	~~When the contracting agency is not the owner (i.e. permits):~~ ~~Corrective Action~~
~~Less than 1.5%~~	~~Removal* or EA per 321.10.6~~	~~Removal* or EA per 321.10.6~~
~~1.5-2.0%~~	~~$2.50~~	~~EA (see 321.10.6)~~
~~2.1-2.7%~~	~~$1.00~~	~~EA (see 321.10.6)~~
~~2.8-6.2%~~	~~Full Payment~~	~~No corrective action~~
~~6.3-6.9%~~	~~$1.00~~	~~EA (see 321.10.6)~~
~~7.0-8.0%~~	~~$2.50~~	~~EA (see 321.10.6)~~
~~Greater than 8.0%~~	~~Removal* or EA per 321.10.6~~	~~Removal* or EA per 321.10.6~~

TABLE 321-5		
LABORATORY VOIDS ACCEPTANCE AND PENALTIES		
Laboratory Air Voids (Measured at N_{des} or 75 blows as applicable)	**When the contracting agency is the owner:** **Payment Reduction** **($ per ton of asphalt concrete)**	**When the contracting agency is not the owner (i.e. permits):** **Corrective Action**
Less than 1.5%	**Removal* or EA**	**Removal* or EA**
1.5-2.0%	**$5.00**	**EA**
2.1-2.7%	**$2.00**	**EA**
2.8-6.2%	**Full Payment**	**No corrective action**
6.3-6.9%	**$2.00**	**EA**
7.0-8.0%	**$5.00**	**EA**
Greater than 8.0%	**Removal* or EA per 321.10.6**	**Removal* or EA**

NOTES: *The Contractor shall remove and replace the entire sublot that is deficient
EA = Engineering Analysis per Section 321.10.6

If an agency or Engineer is purchasing asphalt concrete directly from a commercial material supplier, the agency or Engineer will use Section 321.10, and specifically Tables 321-3A or 321-3B as applicable, 321-4 and 321-5 from Section 321.10, when determining the acceptance of the asphalt concrete with the material supplier.

321.10.3 Surface Testing: If directed by the Engineer surface drainage test shall be performed. The completed surfacing shall be thoroughly compacted, smooth and true to grade and cross-section and free from ruts, humps, depressions or irregularities. An acceptable surface shall not vary more than 1/4 inch from the lower edge of a 12-foot straightedge when the straightedge is placed parallel to the centerline of the roadway. The straightedge shall be furnished by the contractor and shall be acceptable to the Engineer.

All streets shall be water tested for drainage in the presence of the Engineer or designated representative before final acceptance. Any areas not draining properly shall be corrected to the Engineer's satisfaction at the Contractor's expense. Water for this testing shall be provided and paid for by the Contractor.

When deviations in excess of the above tolerance are found, humps or depressions shall be corrected to meet the specified tolerance, or shall be cut out along neat straight lines and replaced with fresh hot mixture and thoroughly compacted to conform with and bond to the surrounding area. Materials and work necessary to correct such deviations shall be at no additional cost to the Contracting Agency.

321.10.4 Asphalt Pavement Thickness: Asphalt Pavement thickness will be determined from cores secured from each sublot for this purpose. Such cores will be taken and measured by the Asphalt Concrete Coring Method. This method can be found at in Section 321.14. Each core location will be patched by the party responsible for the testing.

If the pavement thickness is deficient from the target thickness by 0.25 inches or less, it will be paid for at the contract unit price. If the pavement thickness deficiency is greater than 0.25 inches and the contracting agency is not the owner (i.e. permits) the following steps will apply:

(1) If the thickness deficiency of the pavement exceeds 0.25 inch, the limits of the deficient area will be evaluated by coring at maximum intervals of 100 feet from the deficient core. The thicknesses of the original deficient core will be averaged with the thicknesses of the cores taken from 100 feet on each side of it to determine compliance with the acceptance requirements. If the resulting average thickness deficiency is greater than 0.25 inch, additional cores may be required to define the limits of the deficient area, and shall not be used for re-evaluating acceptance.

(2) If the pavement thickness from step one above deviates from the target thickness by more than 0.25 inch but not more than 0.50 inch, corrective action will be required. This corrective action will consist of application of a Type II slurry seal coat in accordance to Section 715. The Contractor may present an engineering analysis outlining other proposed remedial measures for the consideration of the Engineer. The Engineer will review the engineering analysis and decide within 30 working days whether to accept the proposed remedial measures.

(3) If the pavement thickness from step one above deviates from the target thickness by more than 0.50 inch, corrective action will be required. The deficient area will be overlaid with no less than 1 inch thick lift, for the full width of the pavement to meet or exceed the designed thickness, with the appropriate end and edge milling, with a mixture approved by the Engineer. The Contractor may present an engineering analysis outlining other proposed remedial measures for the Engineer's consideration. The Engineer will review the engineering analysis and decide within 10 working days whether to accept the proposed remedial measures. If the Engineer chooses to reject the engineering analysis, the indicated overlay will be constructed by the Contractor at no additional cost to the Owner.

If the pavement thickness deficiency is greater than 0.25 inches and the contracting agency is the owner, Table 321-6 will apply.

TABLE 321-6	
ASPHALT PAVEMENT THICKNESS PAYMENT REDUCTION For Thickness Deficiency of More Than 0.25 inches and less than 0.50 inches	
Specified Pavement Thickness	**Reduction in Payment or Corrective Action**
Less than 1.5 inches	50%
1.50 inches to 1.99 inches	33%
2.00 inches to 2.49 inches	25%
2.50 inches to 2.99 inches	20%
3.00 inches and over	17%

321.10.5 Density:

321.10.5.1 Pavement 1-1/2 Inches or Less in Nominal Thickness:

Compaction shall consist of a "Rolling Method Procedure" using an established sequence of coverage with specified types of compactors. A pass shall be defined as one movement of a compactor in either direction. Coverage shall be the number of passes as are necessary to cover the entire width being paved.

The rolling sequence, the type of compactor to be used, and the number of coverages required shall be as shown in Table 321-7.

TABLE 321-7				
ROLLING SEQUENCE FOR LIFT THICKNESS 1½" OR LESS				
Rolling Sequence	**Type of Compactor**		**No. of Coverages**	
	Option No. 1	**Option No. 2**	**Option No.1**	**Option No. 2**
Initial	Static Steel	Vibrating Steel	1	1
Intermediate	Pneumatic Tired	Vibrating Steel	4	2- 4*
Finish	Static Steel	Static Steel	1-3	1-3
* Based on the roller pattern which exhibits the best performance.				

The Contractor shall select the option for compaction and, when pneumatic-tired compactors are used will designate the tire pressure. Steel wheel compactors shall not be used in the vibratory mode for courses of one inch or less in thickness nor when the temperature of the asphaltic concrete falls below 180 degrees F. Initial and intermediate compaction shall be accomplished before the temperature of the asphaltic concrete falls below 200 degrees F.

Compaction will be deemed to be acceptable on the condition that the asphaltic concrete is compacted using the type of compactors specified, ballasted and operated as specified, and with the number of coverages of the compactors as specified.

321.10.5.2 Pavement Greater than 1-1/2 Inches in Nominal Thickness:

Achieving the required compaction is the responsibility of the contractor. The number and types of rollers is the contractor's responsibility and shall be sufficient to meet these requirements.

In-place air voids shall be determined in accordance with AASHTO T-269 utilizing cores taken from the finished pavement. The maximum theoretical density used in the determination of in-place air voids will be the average value from the acceptance samples determined for the Lot as outlined in 321.10.1.

The Engineer will designate one random test location for each sublot and the acceptance laboratory will obtain one core from that location. Regardless of sublot quantities or boundaries, a minimum of one core will be obtained per residential str

a minimum of one core per travel lane for collector and arterial streets. The outside one foot of each pass of the pavement course or any unconfined edge will be excluded from testing. The Engineer may exclude areas from the compaction lot that are not accessible by normal compaction equipment.

The Contractor will provide the traffic control to facilitate any coring operations necessary for compaction acceptance.

Cores will be taken per the Asphalt Concrete Coring Method. This method can be found in Section 321.14. Acceptance testing results will be furnished to the contractor within five working days of receipt of samples by the acceptance laboratory.

If the pavement density has in-place voids of 8.0% or less, the asphalt concrete will be paid for at the contract unit price. If the pavement density has in-place voids greater than 8.0%, the deficient area will be evaluated within the sublot by coring at maximum intervals of 100 feet from the deficient core(s). If both cores in a sublot are deficient, 3 to 4 additional cores may be necessary to re-evaluate acceptance. The in-place voids of all the original core(s), whether deficient or acceptable, will be averaged with the in-place voids of the cores taken for re-evaluation to determine compliance with the acceptance requirements. If the average of the in-place voids is greater than 8.0% then Table 321-8 shall apply to the sublot. Additional cores may be required to define the limits of the deficient area, and shall not be used for re-evaluating acceptance.

~~TABLE 321-8~~		
~~PAVEMENT DENSITY PENALTIES~~		
~~Limits of In-place Air Voids for lift thicknesses greater than 1.5 inches~~	~~When the contracting agency is the owner:~~ ~~Payment Reduction~~ ~~($ per ton of asphalt concrete)~~	~~When the contracting agency is not the owner (i.e. permits):~~ ~~Corrective Action~~
~~8.1% to 9.0%~~	~~$4.00~~	~~EA~~
~~9.1% to 10.0%~~	~~$6.00~~	~~EA and Type II Surry Seal~~
~~10.1% to 11.0%~~	~~Removal* or EA per 321.10.6~~	~~Removal* or EA per 321.10.6~~
~~Greater than 11.0%~~	~~Removal~~	~~Removal~~

~~*Notes: The Contractor shall remove and replace the entire sublot that is deficient. Removal for In-place Air Voids greater than 11.0% is not eligible for Section 321.10.6.~~

TABLE 321-8		
PAVEMENT DENSITY PENALTIES		
Limits of In-place Air Voids for lift thicknesses 1.5 inches and greater	**When the contracting agency is the owner:** **Payment Reduction** **($ per ton of asphalt concrete)**	**When the contracting agency is not the owner (i.e. permits):** **Corrective Action**
Below 3.0%	**Removal* or EA**	**Removal* or EA**
3.0% to below 4.0%	**$10.00**	**EA and Type II Surry Seal**
4.0% to 8.0%	**Full Payment**	**Full Payment**
Greater than 8.0% to less than 9.0%	**$6.00**	**EA**
9.0% to 10.0%	**$10.00**	**EA and Type II Surry Seal**
Greater than 10.0%	**Removal* or EA**	**Removal* or EA**

NOTES: *The Contractor shall remove and replace the entire sublot that is deficient.
EA = Engineering Analysis per Section 321.10.6
Removal for In-place Air Voids greater than 11.0% is not eligible for Section 321.10.6.

321.10.6 Engineering Analysis (EA): Within 10 working days after receiving notice that a lot or sublot of asphalt concrete is deficient and is found to fall within the "Removal or EA" band per Table(s) 321-4, 321-5, and/or 321-8 the contractor may submit a written proposal (Engineering Analysis) to accept the material in place at the applicable penalties along with possible remediation(s) listed in the "Removal or EA" category. Engineering Analysis can also be proposed for non-removal categories of "Corrective actions" when the contracting agency is not the owner (i.e. permits).

The Engineering Analysis shall contain an analysis of the anticipated performance of the asphalt concrete if left in place. The Engineering Analysis shall also detail the effect of any proposed corrective action to the material(s) in place as it relates to the in-place material's performance. The Engineering Analysis shall be performed by a professional engineer experienced in asphalt concrete testing and mix designs. If the lot or sublot is submitted for referee testing by the contractor, the ten working days allowed to prepare an engineering will begin upon notification of referee test results.

When an Engineering Analysis recommends that a specific lot or sublot should not be removed, the Engineering Analysis will recommend that the following penalties (Table 321-9) be paid when the contracting agency is the owner, for the specific criteria being reviewed by the EA.

TABLE 321-9		
ENGINEERING ANALYSIS PENALTIES for REMOVAL* LOTS/SUBLOTS LEFT IN-PLACE		
Acceptance Criteria	**Acceptance Limits**	**Penalty When Contracting Agency is the Owner ($/Ton)**
Asphalt Binder Content	Over 0.2% points from that Permitted	$9.00
Laboratory Air Voids (Measured at N_{des} or 75 blows as applicable)	Less than 1.5% or Greater Than 8.0%	$3.75
Limits of In-place Air Voids	10.1% to 11.0%	$9.00

Within 15 working days, the Engineer will determine whether or not to accept the contractor's proposed Engineering Analysis.

321.11 REFEREE:

In the event the contractor elects to question the acceptance test results for either asphalt binder content, laboratory air voids, density or a combination thereof for a sublot, the Contractor may make a written request for additional testing of that sublot. Any request for referee testing must describe the contractor's reasons for questioning the validity of the original acceptance results and must clearly describe which set of acceptance tests are in question. The Contractor will engage an independent laboratory (at the Contractors own expense) who is accredited by AAP in all of the acceptance test methods. The independent laboratory shall be acceptable to the Engineer and shall perform a new set of acceptance tests as required by Section 321.10 representing the area or set of tests in question. The results of these determinations will be binding on both the contractor and the agency.

These tests may include asphalt binder content, aggregate gradation, Marshall or Gyratory unit weight, maximum theoretical unit weight, laboratory air voids and in-place air voids (compaction). Samples for referee testing shall come from representative samples obtained from the completed pavement, as directed by the Engineer.

The number of samples taken will be the same as specified in Section 321.10. The independent laboratory shall compile the test results and transmit them to both the Engineer and the contractor. The independent laboratory shall include a report signed by an Engineer registered in the State of Arizona, who is experienced in asphalt concrete testing and mix design development. The signed report shall give an opinion that the material evaluated does or does not comply with project specifications, shall clearly describe any deficiencies, and the results will be binding between all parties.

321.12 MEASUREMENT:

Asphalt concrete pavement will be measured by the ton, or by the square yard, for the mixture actually used as allowed above, which shall include the required quantities of mineral aggregates, asphalt binder, and mineral admixture. Measurement shall include any tonnage used to construct intersections, roadways, streets, or other miscellaneous surfaces indicated on the plans or as directed by the Engineer.

321.13 PAYMENT:

The asphalt concrete measured as provided above will be paid for at the contract price per ton or square yard, as adjusted per Section 321.10, which price shall be full compensation for the item complete, as herein described and specified.

Payment for tack coat will be by the ton diluted, based on the rate of application, as directed by the Engineer.

No payment will be made for any overrun in quantity of asphalt concrete in excess of 10 percent based on actual field measurement of area covered, design thickness, and the mix design unit weight. The calculations and payment for overrun will be by individual pay item. To compensate or adjust for a thickness deficiency in an underlying asphalt concrete course, the Engineer may authorize a quantity increase in excess of 10 percent for a subsequent asphalt concrete course. In such cases, the quantity in excess of 10 percent will be paid for at the lowest unit price.

Except as otherwise specified in the special provisions, no separate payment will be made for work necessary to construct miscellaneous items or surfaces of asphalt concrete.

321.14 ASPHALT CORE METHOD: Core Drilling of Hot Mix Asphalt (HMA) for Specimens of 4" or 6" diameter

321.14.1 Scope: This method is to establish a consistent method of the use of a diamond bit core to recover specimens of 4 or 6 inch diameter for laboratory analysis and testing. The method will require the use of: water, ice (bagged or other suitable type), dry ice, and a water-soap solution to be utilized when coring asphalt rubber concrete. Individuals doing the specimen recovery should be observing all safety regulations from the equipment manufacturer as well as the required job site safety requirements for actions, and required personal protective equipment.

321.14.2 Core Drilling Device: The core drilling device will be powered by an electrical motor, or by an acceptable gasoline engine. Either device used shall be capable of applying enough effective rotational velocity to secure a drilled specimen. The specimen shall be cored perpendicularly to the surface of pavement, and that the sides of the core are cut in a manner to minimize sample distortion or damage. The machinery utilized for the procedure shall be on a mounted base, have a geared column and carriage that will permit the application of variable pressure to the core head and carriage throughout the entire drilling operation. The carriage and column apparatus shall be securely attached to the base of the apparatus; and the base will be secured with a mechanical fastener or held in place by the body weight of the operator. The core drilling apparatus shall be equipped with a water spindle to allow water to be introduced inside of the drill stem while operating. The cutting edge of the core drill bit shall be of hardened steel or other suitable material with embedded diamond chips in the cutting surface. The core barrel shall be of sufficient diameter to secure a specimen that is a minimum of four or six inches or whichever is prescribed for necessary testing. The core barrel shall not be missing more than one of the teeth used for cutting; if so it shall be discarded and another barrel shall be used. The core barrel shall also be a minimum of two inches longer than the anticipated depth of pavement in accordance with project paving plans.

321.14.3 Accessory Equipment: A sufficient supply of ice and dry ice shall be provided to sufficiently cool the pavement prior to securing the samples from the designated areas in the pavement. The ice should also be used to adjust the temperature of the water used to cool the core bit. A water supply (usually a plastic 35 – 55 gal drum) with sufficient hose to introduce the water into and through the spindle of the coring device by gravity feed. The drum should be white or light in color to minimize excessive thermal heating of the water (*for coring of asphalt rubber cores see Note 1*). At no time shall the water utilized in the coring operation exceed 65° F during the coring operation. Ice shall be utilized o ensure the temperature control of the water being introduced during the cutting operation. An ice chest or other suitably insulated container that can maintain a temperature of less than 70° F shall be used to secure the specimens during transport. The container will be equipped with flat shelving that will support the drilled cores throughout the entire specimen dimension during transport back to the testing facility.

Miscellaneous hand tools to remove the drilled specimen from the drill hole or the core barrel taking great care in not disturbing the specimen more than necessary (refer to fig. 1 in ASTM D5361-05).

321.14.4 Process: The pavement surface at the time of coring shall not exceed a temperature of 90° F; the pavement shall be conditioned with ice or dry ice to ensure that this requirement is met. Immediately after it has been ensured that the pavement has dropped to the required temperature, core drilling shall begin. The operator will then apply an even and continuous pressure (Note 2) to penetrate through the full depth of the pavement. The operator will concurrently ensure that enough water is moving over the core surface as to adequately remove any and all cuttings that could damage the drilled core. After the pavement thickness has been penetrated the core shall be carefully removed from either the drill hole or the core

barrel and be immediately transferred to an ice chest or other suitable container. Each individual core shall be placed on a shelf in the cooler with the exposed side of the specimen facing down, or the "top side" down. If the specimen is a two lift core, the only acceptable means of separating lifts is with a power or other acceptable wet saw type of equipment (conforming to ASTM D5361-05); however, at no time shall cores be split using a mallet and screwdriver or metal straight edge when being tested for bulk density. Perpendicularity of the specimen shall be checked in the field after the specimen has been extracted from the surface. The core operator shall hold the core up to eye level and place the core top side down in a "speed square" or small carpenters square. The specimen placed in the square shall not depart from perpendicular to the axis more than 0.5^{o} (approximately equivalent to 1/16 of an inch in 6 inches). If the specimen is outside of this distance from square it shall be discarded in the field and another sample cored that falls within tolerance. The cores upon arriving at the laboratory for testing shall be carefully cleaned and measured for thickness in accordance with ASTM D3549. A speed square shall be utilized to measure perpendicularity as compared to a 90° degree angle and shall not depart from perpendicular to the axis more than 0.5^{o} (approximately equivalent to 1/16 of an inch in 6 inches). All remaining testing shall be done within the parameters of the current project and / or agency required specification.

- End of Section -

*Note 1 – It should be noted that when the material to be cored is a rubberized asphalt mixture a wetting agent such as liquid dish soap shall be added to the water barrel to hinder the material from sticking or allowing the binder to spread during coring.

*Note 2 – This refers to pressure exerted on the core barrel and machine during the coring process. Too much pressure can cause damage to the core barrel and the motor; and too little pressure can cause a glazing of the diamonds, reducing cutting efficiency and premature wear of the barrel

Case 13-12

DATE: July 31, 2013

TO: MAG Specifications and Details Committee Members

FROM: Peter Kandaris, Advisory Member

RE: Revisions to Section 340 – Concrete Curb, Gutter, Sidewalk, Sidewalk Ramps, Driveway and Alley Entrance – *Modifications to 7/10/13 draft*

Modifications to the 7/10/13 draft of the revised specification are attached. Comments received to date have been incorporated as follows (adds/mods shown in yellow highlights):

- Section 340.3.1 – Expansive soil testing has been changed to typical index test methods (sieve, PI, liquid limit). See attached documentation for new parameters. Expansive soil is now treated the same way as unsuitable soil (6" removal and replacement).

- Section 340.4.2 – Modified language to note curb/gutter contraction joints are to match adjacent *attached* sidewalks.

- Section 340.3.7 – Added language to note retooling joints as needed to prevent groove bonding.

- Section 340.3.7 – Contractor stamping is now noted to be placed on sidewalks and sidewalk ramps (not on curbs and gutters).

- Section 340.3.9 – Noted that sidewalk tolerance measurements are to done in all directions.

- Added modifications to Details 221 and 230 to change score marks references to contraction joints.

323 E. Southern Ave, #109, Tempe, AZ 85282 ● Telephone 480.273.9445 ● Fax 480.393.7005
www.dgacon.com

SECTION 340

CONCRETE CURB, GUTTER, SIDEWALK, SIDEWALK RAMPS, DRIVEWAY AND ALLEY ENTRANCE

340.1 DESCRIPTION:

The various types of concrete curb, gutter, sidewalk, sidewalk ramps, driveways, and alley entrances shall be constructed to the dimensions indicated on the plans and standard detail drawings.

340.2 MATERIALS:

Concrete shall be ~~class B unless otherwise~~as noted on the standard details. Concrete shall conform to the requirements of Section 725.

Expansion joint filler shall be ½-inch thick preformed bituminous material in compliance ~~comply~~ with Section 729, unless otherwise noted.

340.2.1 Detectable Warnings: Truncated dome dimensions and spacing for detectable warnings are defined by the Americans with Disabilities Act Accessibilities Guidelines (ADAAG) for optimal detectability and public safety. Detectable warnings shall consist of raised truncated domes aligned in a square grid pattern in conformity to the ADAAG. Truncated domes shall have the following nominal dimensions: base diameter of 1.0 inches (0.9 inches minimum) top diameter of 50 percent of the base diameter minimum to 65 percent of the base diameter maximum, and height of 0.2 inches. Dome center-to-center spacing of 2.35 inches, measured between the most adjacent domes on the square grid. Dome center-to-center spacing for radial installations shall be 1.6 inches minimum and 2.4 inches maximum with a base-to-base spacing of 0.65 inches minimum. Detectable warning edges shall be sized and installed so that dome spacing is maintained across adjoining edges. Each dome shall have a~~n~~ minimum static friction of coefficient of 0.8 as tested per ASTM C1028.

340.2.1.1 Color and Contrast: Detectable warnings shall contrast visually with adjoining surfaces, either light-on-dark or dark-on-light. Specific colors to be used shall be approved by the local jurisdictional agency prior to installation. Detectable warnings shall have integral color throughout.

340.2.1.2 Materials: Detectable warning materials shall be durable with a non-slip surface not subject to spalling, chipping, delamination, or separation. All detectable warnings shall be approved by the local jurisdictional agency prior to installation.

340.2.1.3 Attachment System: Detectable warnings shall be either placed in freshly poured concrete (wet-set) or recessed into pre-formed concrete. Detectable warnings using wet-set placement shall have an anchoring method that assures constant contact of the detectable warning bottom surface with the concrete as it cures, thus rendering the ramp a single monolithic structure. The thicker and heavier detectable warnings lowered into pre-formed recesses in the concrete substrate must demonstrate a firm fitting into metal reinforced frames without gaps along the edges that can channel water, sand, or debris. They must also be able to resist movement (i.e. sliding, rocking, or lifting) once in service. All attachment systems shall be approved by the local jurisdictional agency.

340.3 CONSTRUCTION METHODS:

Existing pavements and concrete that are joined by new construction shall be cut in accordance with Section ~~601~~336.2.2.

340.3.1 Subgrade Preparation: The subgrade shall be constructed and compacted true to grades and lines shown on the plans and as specified in Section 301. All soft or unsuitable material shall be removed to a depth of not less than 6 inches below subgrade elevation and replaced with material satisfactory to the Engineer. Removal and replacement of soft or unsuitable materials will be paid for as extra work.

When the Engineer determines that the existing subgrade consists of soils with questionable swelling characteristics, subgrade shall be tested in accordance with Table 340-1. The upper 6 inches of marginally expansive soils shall be compacted per Section 301.3 at a moisture content between 0% to 3% above optimum moisture per ASTM D698. Expansive soils shall be considered unsuitable and removed and replaced in accordance with the preceding paragraph. Alternate corrective measures may be submitted to the Agency by the Contractor or Permitee for review. The submittal must include recommendation affixed with the professional seal of an Arizona registered engineer

Table 340-1			
Description	Percent Fines (-#200 sieve) (1)	Plasticity Index (2)	Liquid Limit (3)
Non-expansive	> 20%	≤ 15	≤ 25
Marginally expansive		> 15 and ≤ 30	> 25 and ≤ 50
Expansive		> 30	> 50

(1) Tested in accordance with ASTM C117
(2) Tested in accordance with AASHTO T90 (wet prep per AASHTO T146)
(3) Tested in accordance with AASHTO T89 (wet prep per AASHTO T146)

~~the moisture content shall be brought as close as possible to the optimum required for compaction. This shall be done by the addition of water, by the addition and blending of dry suitable material or by the drying of existing material. The subgrade shall then be compacted to a relative density of 75% minimum to 85% maximum with 80% as ideal.~~

~~Material displaced in the~~ Material removed for construction shall not be placed on the base and/or surfacing material already in place on the roadway nor shall the excavated material be placed in such a manner as to interfere with access to property or traffic flow in the street.

~~Existing concrete sidewalks and driveways which abut the new sidewalks and driveway entrances shall be removed to a distance required to maintain a slope as indicated by standard details or not to exceed 1 inch per foot where sidewalks are concerned. Sawcutting is required at the match lines and payment will be made under the respective pay items as provided in the proposal.~~

340.3.2 Formwork: Concrete curbs, gutters and sidewalks shall be constructed by the conventional use of forms, or may be constructed by means of an appropriate machine when approved by the Engineer.

If machines designed specifically for such work and approved by the Engineer are used, the results must be equal to or better than that produced by the use of forms. If the results are not satisfactory to the Engineer, the use of the machine shall be discontinued and the Contractor shall make necessary repairs at his own expense. All applicable requirements of construction by use of forms shall apply to the use of machines.

Forms conforming to the dimensions of the curb, gutter, sidewalk, sidewalk ramps, driveway, and alley entrance shall be carefully set to line and grade, and securely staked in position. The forms and subgrade shall be watered immediately in advance of placing concrete.

Forms shall be thoroughly cleaned each time they are used, and shall be coated with a light oil, or other releasing agent of a type which will not discolor the concrete.

340.3.3 Concrete Placement: The concrete shall be thoroughly spaded away from the forms so that there will be no rock pockets next to the forms. The concrete may be compacted by mechanical vibrators approved by the Engineer. Tamping or vibrating shall continue until the mortar flushes to the surface, and the coarse aggregate is below the concrete surface. The surface shall then be struck off and worked to grade and cross section with a float.

If machine placement is used, the machine shall place, consolidate and finish the concrete in one complete pass, requiring a minimum of hand finishing producing a dense and homogeneous section. A form shall trail behind the machine for such a distance that no appreciable concrete slumping will occur. Final finishing shall be as specified hereinafter.

340.3.4 Joints: Shall be constructed in a straight line, vertical plane and perpendicular to the longitudinal line of the sidewalk, curb and gutter, single curb, etc., except in cases of curved alignment, where they shall be constructed along the radial lines of the curve.

340.3.4.1 Expansion Joints: ~~Unless otherwise specified, expansion joints s~~Shall be installed at all radius points, at both sides of each driveway, at both sides of each alley entrance, ~~at adjoining structures and~~ at every change of depth in the concrete and shall provide for complete separation of adjoining structures. The maximum distance between expansion joints shall be 50 feet. ~~Expansion joints shall be constructed in a straight line, vertical plane and perpendicular to the longitudinal line of the sidewalk, curb and gutter, single curb, etc., except in cases of curved alignment, where they will be constructed along the radial lines of the curve. Expansion joints shall be placed to match the joints of the adjacent concrete such as sidewalk to the curb and gutter or single curb, etc.~~

Expansion joints shall be constructed to the full depth and width of the concrete and shall match joints in adjacent pavement, sidewalk, curb or gutter. The expansion joint material shall extend fully through the concrete and one inch into the subgrade with the top of the expansion joint material one-quarter inch below the top surface~~ as depicted in Detail 230~~. Expansion joint material shall be secured in place prior to placement of concrete. ~~Unless otherwise specified, all expansion joints installed against newly placed concrete, sawcut or other smooth surfaces shall comply with Section 729.1 - Premolded Joint Filler per ASTM D1751, ½ inch, Bituminous Type. Expansion joints installed against existing uneven surfaces shall be per Section 729.2 - Pour Type Joint Filler.~~

340.3.4.2 Contraction Joints: ~~Contraction joints, u~~Unless otherwise specified, the large aggregate in contraction joints shall be separated to either side of the joint for a minimum depth equal to 25% of the concrete thickness; the finished depth shall be a minimum of ¾ inch.~~shall be constructed in accordance with the standard details, and in a straight line and vertical plane perpendicular to the longitudinal line of the sidewalk, sidewalk ramp or curb and gutter, except in cases of curved alignment when they will be constructed along the radial lines of the curb~~.

Contraction joints in curbs and gutters shall match contraction joints in adjacent attached sidewalks.

~~Sidewalk or sidewalk ramp score marks, unless otherwise specified, shall be constructed in accordance with the standard detail.~~

340.3.5 Edges: All exposed edges shall be shaped with a suitable tool so form~~ed as to round the~~ edges ~~to a radius~~having the shape as indicated on the ~~standard~~referenced detail~~s~~.

~~**340.3.1 Detectable Warnings:** The detectable warning surface shall be located so that the edge nearest the curb line is 6 inches minimum and 8 inches maximum back from the face of curb. Detectable warning surfaces for railroads shall be located so that the edge nearest the rail crossing is 6 inches minimum and 8 inches maximum from the vehicle dynamic envelope.~~

340.3.6 Detectable Warnings: Detectable warnings shall be installed perpendicular to the direction of pedestrian/wheelchair travel and have a minimum width of 24 inches measured perpendicular to the edge of the roadway or rail crossing. The base surface of detectable warnings shall be installed flush with the adjacent walkway surface; the truncated domes shall extend above the walkway surface. The boundary between detectable warnings and the adjacent walkway shall provide a flush uniform surface that will not cause ponding of water nor present a tripping hazard. Partial domes at the edge of the detectable warning shall be made flush to match the base surface of the detectable warning. Detectable warnings installed on curb ramps shall extend the full width of the ramp depression.

Detectable warnings installed on sidewalk ramps shall modify the sidewalk concrete thickness at the detectable warning to provide a minimum concrete thickness of four-inches (4”). When detectable warnings are modules inset into the sidewalk ramp, the bottom surface of the sidewalk shall be lowered a distance equal to or greater than the module thickness to maintain the minimum sidewalk thickness. The sidewalk bottom surface shall have a minimum transition taper length of 12” between the thickened and normal depth sections of sidewalk. The detectable warning surface shall be located so that the edge nearest the curb line is 6 inches minimum and 8 inches maximum back from the face of curb.

Detectable warning surfaces for pedestrian at-grade rail crossings not located within a street or highway shall be installed on each side of the rail crossing, located as shown on plans. Detectable warnings shall extend the full width of the pedestrian walkway.

340.3.7 Form Removal and Finishing: The front face form shall not be removed before the concrete has taken ~~the~~ initial set and has sufficient strength to carry its own weight.~~,~~ ~~g~~Gutter forms and rear forms shall not be removed until concrete has hardened sufficiently to prevent damage to the edges. ~~Special care shall be taken to prevent any damage.~~ Any portion of concrete damaged while stripping forms shall be repaired or ~~if the damage is severe,~~ replaced at no additional cost to the Contracting Agency.

After the forms are removed, the joints shall be tooled and the surface finished with a float to remove all imperfections. As needed, retool joints after finishing to prevent groove bonding. In all cases, the resulting surface shall be smooth and of uniform color with all rough spots, projections, and form stakes removed. No plastering of the concrete will be allowed. The concrete work shall have a true surface; shall be free from sags, twists, or warps; have a uniform appearance; and be true to the lines, grades, and configurations indicated on the drawings.

Surfaces shall be light broom finished.

The Contractor shall stamp ~~his~~the company name and year ~~on all work done by him,~~ on each end of the ~~curb, gutter,~~ sidewalk or sidewalk ramp constructed. The letters shall not be less than 3/4 inch in height.

340.3.8 Curing: As soon after the completion of the finishing operations as the condition of the concrete will permit, all exposed surface shall either be sprayed with a pigmented curing compound or sealed with a material conforming to Section 726. Curing compound shall be applied under pressure through a spray nozzle in such manner and quantity as to entirely seal all exposed concrete surfaces with a uniform film. The membrane shall be applied in two applications for a total coverage of 150 square feet per gallon. Concrete surfaces shall be kept damp until the curing compound is applied. Should the curing compound

seal be broken or damaged before the expiration of 10 days after the placing of the concrete, the break shall be immediately repaired by the application of additional curing compound over the damaged area. If due to weather conditions, materials used, or for any other reason, there is any likelihood of the fresh concrete checking or cracking before the curing operations, it shall be kept damp (not wet) by indirect fine spray of water until such danger is past, or until curing operations are started in the particular area affected. The need for adequate continuous curing is greatest during the first few hours after placement of concrete.

340.3.9 Tolerances: The face, top, back, and flow line of the curb and gutter shall not deviate in excess of ¼-inch over 10 feet, as~~be~~ tested with a 10-foot straightedge or curve template, longitudinally along the surface. ~~Any deviation in excess of 1/4 inch shall be corrected at no additional cost to the Contracting Agency.~~

The surface of concrete sidewalk or sidewalk ramp in all directions shall not deviate in excess of 1/8-inch over 5 feet as ~~be~~ tested with a 5-foot straightedge except for the ¼-inch recess of the preformed material in expansion joints. ~~Any deviation in excess of 1/8 inch shall be corrected at no additional cost to the Contracting Agency.~~

All finished concrete elevations shall not deviate from the elevations shown on the plans, or indicated by typical sections or standard details referenced within the construction documents, by more than 1/2 inch.

When required by the Engineer, gutters ~~having a slope of 0.8 foot per hundred feet or less, or where unusual or special conditions cast doubt on the capability of the gutters to drain, they~~ shall be water tested. ~~Water testing shall consist of~~The Contractor shall establish~~ing~~ flow in the length of gutter to be tested by supplying and distributing water from a hydrant, tank truck or other source. ~~One hour a~~After the supply of water is shut off~~,~~ and water has stopped flowing, the gutter shall be inspected for evidence of ponding or improper shape. The work shall be deemed deficient if ~~In the event~~ water is found ponded in the gutter to a depth greater than ½ inch~~,~~ or ponding extends onto the adjacent asphalt pavement~~, the defect or defects shall be corrected in a manner acceptable to the Engineer without additional cost to the Contracting Agency~~.

Areas between elevations shown on the plans shall be straight graded or smoothly transitioned through a vertical curve in a manner approved by the Engineer or as otherwise indicated on the construction documents.

340.3.10 Deficiencies: Any section of the work deficient in depth or not conforming to the plans or specifications shall be removed and replaced by the Contractor at no additional cost to the Contracting Agency. Replacement or reconstruction shall be from joint to joint.

Concrete work that deviates in straightness as specified in Section 340.3.9 shall be removed and replaced.

Remove and replace gutters that exceed the ponding tolerance in Section 340.3. Grinding shall only be allowed if approved by the Engineer.

Remove and replace all work that exceeds the elevation tolerance in Section 340.3.
~~Finishing and Curing of the concrete shall be done in the manner specified in Section 505.~~

~~**340.3.1 Detectable Warnings:** The detectable warning surface shall be located so that the edge nearest the curb line is 6 inches minimum and 8 inches maximum back from the face of curb. Detectable warning~~

~~surfaces for railroads shall be located so that the edge nearest the rail crossing is 6 inches minimum and 8 inches maximum from the vehicle dynamic envelope.~~

~~Detectable warnings shall be installed perpendicular to the direction of pedestrian/wheelchair travel and have a minimum width of 24 inches measured perpendicular to the edge of the roadway or rail crossing. The base surface of detectable warnings shall be installed flush with the adjacent walkway surface; the truncated domes shall extend above the walkway surface. The boundary between detectable warnings and the adjacent walkway shall provide a flush uniform surface that will not cause ponding of water nor present a tripping hazard. Partial domes at the edge of the detectable warning shall be made flush to match the base surface of the detectable warning. Detectable warnings installed on curb ramps shall extend the full width of the ramp depression.~~

~~Detectable warnings installed on sidewalk ramps shall modify the sidewalk concrete thickness at the detectable warning to provide a minimum thickness of four inches (4"). When detectable warnings are modules inset into the sidewalk ramp, the bottom surface of the sidewalk shall be lowered a distance equal to or greater than the module thickness to maintain the minimum sidewalk thickness. The sidewalk bottom surface shall have a minimum transition taper length of 12" between the thickened and normal depth sections of sidewalk.~~

340.4 BACKFILLING:

Unless otherwise specified the Contractor shall backfill behind the curbs, sidewalk or sidewalk ramps with soil native to the area to the lines and grades shown on the plans.

340.5 MEASUREMENT:

Concrete curbs and gutters of the various types shown on the plans and in the proposal, will be measured along gutter flow line through inlets, catch basins, driveways, sidewalk ramps, etc., by the lineal foot to the nearest foot for each type, complete in place. Measurement for curb terminations and transitions shall be included with the linear measurement of the various types of curb or curb and gutter as shown on the plans and in the proposal.

Curb and gutter type shall be based on the configuration of the final exposed surfaces. The increased curb and gutter depth required at valley gutter aprons or driveways shall not be measured as a separate pay item; any additional Contractor cost shall be included in the unit cost associated with the valley gutter, driveway or other associated item.

Concrete sidewalks~~, sidewalk ramps~~, driveways, alley intersections, valley gutters and aprons will be measured to the nearest square foot complete in place. ~~When concrete sidewalk, sidewalk ramps, driveways, alley intersections, valley gutters, and/or aprons are cut during trenching operations, the square foot measurement for payment will be in accordance with Section 336.~~

Detectable warnings shall not be measured for payment. Detectable warnings are considered integral to the walking surface that they form a part of and the cost is included in the related pay item.

Curb ramp installations shall be measured as complete installed units and shall include the ramp curb and the walking surfaces between the ramp curb and back of curb and gutter or single curb. Single curb or curb and gutter located at the edge of roadway shall be paid for separately. The surface area of curb ramps shall not be included in the measured quantity for sidewalks.

340.6 PAYMENT:

Payment ~~for the above named items~~ will be made in accordance with the unit prices or lump sums as set forth in the proposal. Such payment shall include full compensation for furnishing all labor, material, tools and equipment and accomplishing all work in conformance with the contract documents.

Payment for curb ramps shall include the ramp curb and the walking surfaces between the ramp curb and back of curb and gutter or single curb.

Over-excavation of soft, expansive or unsuitable materials and installation granular materials will be paid as a separate pay item, not included with the above measured pay items.

SECTION 340

CONCRETE CURB, GUTTER, SIDEWALK, SIDEWALK RAMPS, DRIVEWAY AND ALLEY ENTRANCE

340.1 DESCRIPTION:

The various types of concrete curb, gutter, sidewalk, sidewalk ramps, driveways, and alley entrances shall be constructed to the dimensions indicated on the plans and standard detail drawings.

340.2 MATERIALS:

Concrete shall be as noted on the standard details. Concrete shall conform to the requirements of Section 725.

Expansion joint filler shall be ½-inch thick preformed bituminous material in compliance with Section 729, unless otherwise noted.

340.2.1 Detectable Warnings: Truncated dome dimensions and spacing for detectable warnings are defined by the Americans with Disabilities Act Accessibilities Guidelines (ADAAG) for optimal detectability and public safety. Detectable warnings shall consist of raised truncated domes aligned in a square grid pattern in conformity to the ADAAG. Truncated domes shall have the following nominal dimensions: base diameter of 1.0 inches (0.9 inches minimum) top diameter of 50 percent of the base diameter minimum to 65 percent of the base diameter maximum, and height of 0.2 inches. Dome center-to-center spacing of 2.35 inches, measured between the most adjacent domes on the square grid. Dome center-to-center spacing for radial installations shall be 1.6 inches minimum and 2.4 inches maximum with a base-to-base spacing of 0.65 inches minimum. Detectable warning edges shall be sized and installed so that dome spacing is maintained across adjoining edges. Each dome shall have a minimum static friction of coefficient of 0.8 as tested per ASTM C1028.

340.2.1.1 Color and Contrast: Detectable warnings shall contrast visually with adjoining surfaces, either light-on-dark or dark-on-light. Specific colors to be used shall be approved by the local jurisdictional agency prior to installation. Detectable warnings shall have integral color throughout.

340.2.1.2 Materials: Detectable warning materials shall be durable with a non-slip surface not subject to spalling, chipping, delamination, or separation. All detectable warnings shall be approved by the local jurisdictional agency prior to installation.

340.2.1.3 Attachment System: Detectable warnings shall be either placed in freshly poured concrete (wet-set) or recessed into pre-formed concrete. Detectable warnings using wet-set placement shall have an anchoring method that assures constant contact of the detectable warning bottom surface with the concrete as it cures, thus rendering the ramp a single monolithic structure. The thicker and heavier detectable warnings lowered into pre-formed recesses in the concrete substrate must demonstrate a firm fitting into metal reinforced frames without gaps along the edges that can channel water, sand, or debris. They must also be able to resist movement (i.e. sliding, rocking, or lifting) once in service. All attachment systems shall be approved by the local jurisdictional agency.

340.3 CONSTRUCTION METHODS:

Existing pavements and concrete that are joined by new construction shall be cut in accordance with Section 336.2.2.

340.3.1 Subgrade Preparation: The subgrade shall be constructed and compacted true to grades and lines shown on the plans and as specified in Section 301. All soft or unsuitable material shall be removed to a depth of not less than 6 inches below subgrade elevation and replaced with material satisfactory to the Engineer. Removal and replacement of soft or unsuitable materials will be paid for as extra work.

When the Engineer determines that the existing subgrade consists of soils with questionable swelling characteristics subgrade shall be tested in accordance with Table 340-1. The upper 6 inches of marginally expansive soils shall be compacted per Section 301.3 at a moisture content between 0% to 3% above optimum moisture per ASTM D698. Expansive soils shall be considered unsuitable and removed and replaced in accordance with the preceding paragraph. Alternate corrective measures may be submitted to the Agency by the Contractor or Permitee for review. The submittal must include recommendation affixed with the professional seal of an Arizona registered engineer

Table 340-1			
Description	Percent Fines (-#200 sieve) (1)	Plasticity Index (2)	Liquid Limit (3)
Non-expansive	> 20%	≤ 15	≤ 25
Marginally expansive		> 15 and ≤ 30	> 25 and ≤ 50
Expansive		> 30	> 50

(1) Tested in accordance with ASTM C117
(2) Tested in accordance with AASHTO T90 (wet prep per AASHTO T146)
(3) Tested in accordance with AASHTO T89 (wet prep per AASHTO T146)

Material removed for construction shall not be placed on the base and/or surfacing material already in place on the roadway nor shall the excavated material be placed in such a manner as to interfere with access to property or traffic flow in the street.

340.3.2 Formwork: Concrete curbs, gutters and sidewalks shall be constructed by the conventional use of forms, or may be constructed by means of an appropriate machine when approved by the Engineer.

If machines designed specifically for such work and approved by the Engineer are used, the results must be equal to or better than that produced by the use of forms. If the results are not satisfactory to the Engineer, the use of the machine shall be discontinued and the Contractor shall make necessary repairs at his own expense. All applicable requirements of construction by use of forms shall apply to the use of machines.

Forms conforming to the dimensions of the curb, gutter, sidewalk, sidewalk ramps, driveway, and alley entrance shall be carefully set to line and grade, and securely staked in position. The forms and subgrade shall be watered immediately in advance of placing concrete.

Forms shall be thoroughly cleaned each time they are used, and shall be coated with a light oil, or other releasing agent of a type which will not discolor the concrete.

340.3.3 Concrete Placement: The concrete shall be thoroughly spaded away from the forms so that there will be no rock pockets next to the forms. The concrete may be compacted by mechanical vibrators approved by the Engineer. Tamping or vibrating shall continue until the mortar flushes to the surface, and the coarse aggregate is below the concrete surface. The surface shall then be struck off and worked to grade and cross section with a float.

If machine placement is used, the machine shall place, consolidate and finish the concrete in one complete pass, requiring a minimum of hand finishing producing a dense and homogeneous section. A form shall trail behind the machine for such a distance that no appreciable concrete slumping will occur. Final finishing shall be as specified hereinafter.

340.3.4 Joints: Shall be constructed in a straight line, vertical plane and perpendicular to the longitudinal line of the sidewalk, curb and gutter, single curb, etc., except in cases of curved alignment, where they shall be constructed along the radial lines of the curve.

340.3.4.1 Expansion Joints: Shall be installed at all radius points, at both sides of each driveway, at both sides of each alley entrance, at every change of depth in the concrete and shall provide for complete separation of adjoining structures. The maximum distance between expansion joints shall be 50 feet.

Expansion joints shall be constructed to the full depth and width of the concrete and shall match joints in adjacent pavement, sidewalk, curb or gutter. The expansion joint material shall extend fully through the concrete and one inch into the subgrade with the top of the expansion joint material one-quarter inch below the top surface. Expansion joint material shall be secured in place prior to placement of concrete.

340.3.4.2 Contraction Joints: Unless otherwise specified, the large aggregate in contraction joints shall be separated to either side of the joint for a minimum depth equal to 25% of the concrete thickness; the finished depth shall be a minimum of ¾ inch..

Contraction joints in curbs and gutters shall match contraction joints in adjacent attached sidewalks.

340.3.5 Edges: All exposed edges shall be shaped with a suitable tool so form edges having the shape as indicated on the referenced detail.

340.3.6 Detectable Warnings: Detectable warnings shall be installed perpendicular to the direction of pedestrian/wheelchair travel and have a minimum width of 24 inches measured perpendicular to the edge of the roadway or rail crossing. The base surface of detectable warnings shall be installed flush with the adjacent walkway surface; the truncated domes shall extend above the walkway surface. The boundary between detectable warnings and the adjacent walkway shall provide a flush uniform surface that will not cause ponding of water nor present a tripping hazard. Partial domes at the edge of the detectable warning shall be made flush to match the base surface of the detectable warning. Detectable warnings installed on curb ramps shall extend the full width of the ramp depression.

Detectable warnings installed on sidewalk ramps shall modify the sidewalk concrete thickness at the detectable warning to provide a minimum concrete thickness of four-inches (4”). When detectable warnings are modules inset into the sidewalk ramp, the bottom surface of the sidewalk shall be lowered a distance equal to or greater than the module thickness to maintain the minimum sidewalk thickness. The sidewalk bottom surface shall have a minimum transition taper length of 12” between the thickened and normal depth sections of sidewalk. The detectable warning surface shall be located so that the edge nearest the curb line is 6 inches minimum and 8 inches maximum back from the face of curb.

Detectable warning surfaces for pedestrian at-grade rail crossings not located within a street or highway shall be installed on each side of the rail crossing, located as shown on plans. Detectable warnings shall extend the full width of the pedestrian walkway.

340.3.7 Form Removal and Finishing: The front face form shall not be removed before the concrete has taken initial set and has sufficient strength to carry its own weight. Gutter forms and rear forms shall not

be removed until concrete has hardened sufficiently to prevent damage to the edges. Any portion of concrete damaged while stripping forms shall be repaired or replaced at no additional cost to the Contracting Agency.

After the forms are removed, the joints shall be tooled and the surface finished with a float to remove all imperfections. As needed, retool joints after finishing to prevent groove bonding. In all cases, the resulting surface shall be smooth and of uniform color with all rough spots, projections, and form stakes removed. No plastering of the concrete will be allowed. The concrete work shall have a true surface; shall be free from sags, twists, or warps; have a uniform appearance; and be true to the lines, grades, and configurations indicated on the drawings.

Surfaces shall be light broom finished.

The Contractor shall stamp the company name and year on each end of the sidewalk or sidewalk ramp constructed. The letters shall not be less than 3/4 inch in height.

340.3.8 Curing: As soon after the completion of the finishing operations as the condition of the concrete will permit, all exposed surface shall either be sprayed with a pigmented curing compound or sealed with a material conforming to Section 726. Curing compound shall be applied under pressure through a spray nozzle in such manner and quantity as to entirely seal all exposed concrete surfaces with a uniform film. The membrane shall be applied in two applications for a total coverage of 150 square feet per gallon. Concrete surfaces shall be kept damp until the curing compound is applied. Should the curing compound seal be broken or damaged before the expiration of 10 days after the placing of the concrete, the break shall be immediately repaired by the application of additional curing compound over the damaged area.
If due to weather conditions, materials used, or for any other reason, there is any likelihood of the fresh concrete checking or cracking before the curing operations, it shall be kept damp (not wet) by indirect fine spray of water until such danger is past, or until curing operations are started in the particular area affected. The need for adequate continuous curing is greatest during the first few hours after placement of concrete.

340.3.9 Tolerances: The face, top, back, and flow line of the curb and gutter shall not deviate in excess of ¼-inch over 10 feet, as tested with a 10-foot straightedge or curve template, longitudinally along the surface.

The surface of concrete sidewalk or sidewalk ramp in all directions shall not deviate in excess of 1/8-inch over 5 feet as tested with a 5-foot straightedge except for the ¼-inch recess of the preformed material in expansion joints.

All finished concrete elevations shall not deviate from the elevations shown on the plans, or indicated by typical sections or standard details referenced within the construction documents, by more than 1/2 inch.

When required by the Engineer, gutters shall be water tested. The Contractor shall establish flow in the length of gutter to be tested by supplying and distributing water from a hydrant, tank truck or other source. After the supply of water is shut off and water has stopped flowing, the gutter shall be inspected for evidence of ponding or improper shape. The work shall be deemed deficient if water is found ponded in the gutter to a depth greater than ½ inch or ponding extends onto the adjacent asphalt pavement.

Areas between elevations shown on the plans shall be straight graded or smoothly transitioned through a vertical curve in a manner approved by the Engineer or as otherwise indicated on the construction documents.

340.3.10 Deficiencies: Any section of the work deficient in depth or not conforming to the plans or specifications shall be removed and replaced by the Contractor at no additional cost to the Contracting Agency. Replacement or reconstruction shall be from joint to joint.

Concrete work that deviates in straightness as specified in Section 340.3.9 shall be removed and replaced.

Remove and replace gutters that exceed the ponding tolerance in Section 340.3. Grinding shall only be allowed if approved by the Engineer.

Remove and replace all work that exceeds the elevation tolerance in Section 340.3.

340.4 BACKFILLING:

Unless otherwise specified the Contractor shall backfill behind the curbs, sidewalk or sidewalk ramps with soil native to the area to the lines and grades shown on the plans.

340.5 MEASUREMENT:

Concrete curbs and gutters of the various types shown on the plans and in the proposal, will be measured along gutter flow line through inlets, catch basins, driveways, sidewalk ramps, etc., by the lineal foot to the nearest foot for each type, complete in place. Measurement for curb terminations and transitions shall be included with the linear measurement of the various types of curb or curb and gutter as shown on the plans and in the proposal.
Curb and gutter type shall be based on the configuration of the final exposed surfaces. The increased curb and gutter depth required at valley gutter aprons or driveways shall not be measured as a separate pay item; any additional Contractor cost shall be included in the unit cost associated with the valley gutter, driveway or other associated item.

Concrete sidewalks, driveways, alley intersections, valley gutters and aprons will be measured to the nearest square foot complete in place.

Detectable warnings shall not be measured for payment. Detectable warnings are considered integral to the walking surface that they form a part of and the cost is included in the related pay item.

Curb ramp installations shall be measured as complete installed units and shall include the ramp curb and the walking surfaces between the ramp curb and back of curb and gutter or single curb. Single curb or curb and gutter located at the edge of roadway shall be paid for separately. The surface area of curb ramps shall not be included in the measured quantity for sidewalks.

340.6 PAYMENT:

Payment will be made in accordance with the unit prices or lump sums as set forth in the proposal. Such payment shall include full compensation for furnishing all labor, material, tools and equipment and accomplishing all work in conformance with the contract documents.

Payment for curb ramps shall include the ramp curb and the walking surfaces between the ramp curb and back of curb and gutter or single curb.

Over-excavation of soft, expansive or unsuitable materials and installation granular materials will be paid as a separate pay item, not included with the above measured pay items.

CURB TRANSITION TYPE 'A' TO TYPE 'C'

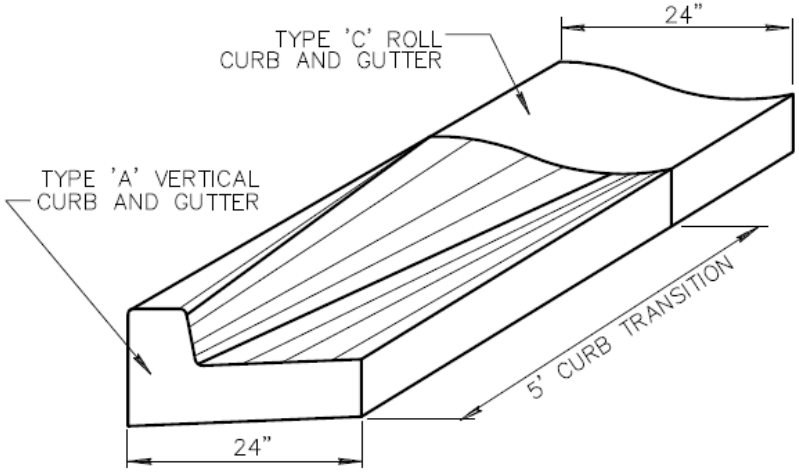

CURB AND GUTTER TRANSITION

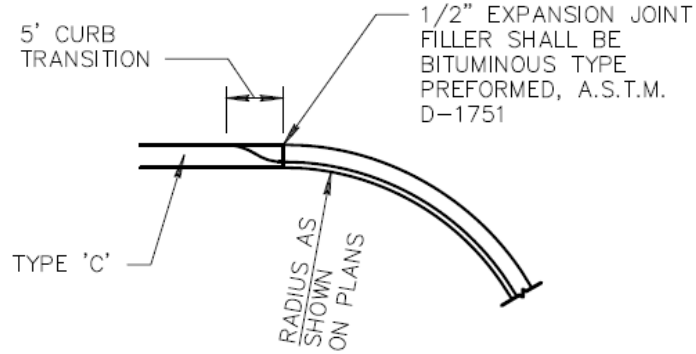

INTEGRAL ROLL CURB, GUTTER AND SIDEWALK

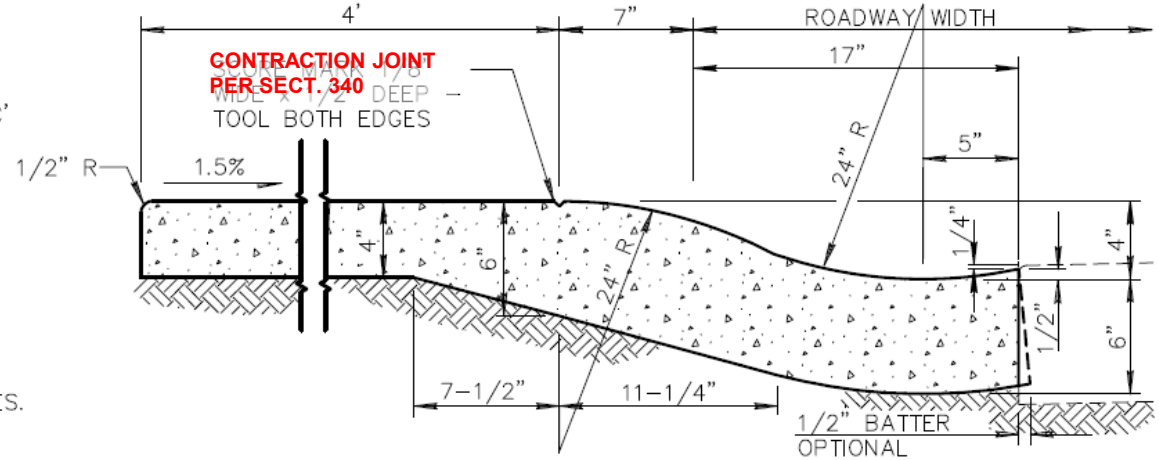

NOTES: (CURB AND GUTTER TRANSITIONS)

1. TRANSITIONS WILL BE PAID FOR AS THE PREDOMINANT TYPE OF CURB AND GUTTER BEING TRANSITIONED. WHEN TYPE 'A' CURB AND GUTTER ARE USED AT CURB RETURNS AND TYPE 'C' CURB AND GUTTER IS PREDOMINANTLY USED ELSEWHERE, THE TYPE 'A' TO TYPE 'C' TRANSITIONS SHALL BE MEASURED AND PAID FOR AS TYPE 'C' CURB AND GUTTER.
2. WHERE PROPOSED CONSTRUCTION IS TO BE CONNECTED TO EXISTING CURB AND GUTTER, THE TRANSITION SHALL BE INDICATED ON PLANS.
3. CLASS 'B' CONCRETE PER SECT. 725.
4. TRANSITION BETWEEN TYPICAL SECTIONS SHALL BE ACCOMPLISHED BY THE USE OF DIRECT STRAIGHT LINE TRANSITIONS OF THE FLOW LINE AND OTHER SURFACE FEATURES.

NOTES: (INTEGRAL ROLL CURB, GUTTER AND SIDEWALK)

1. CONCRETE TO BE MONOLITHIC POUR. EXPOSED SURFACE FINISH AS PER SIDEWALK AND GUTTER DETAIL.
2. CONTRACTION JOINT SPACING 5' MAXIMUM.
3. EXPANSION JOINTS PER SECT. 340.
4. CLASS 'B' CONCRETE PER SECT. 725.

DETAIL NO.				REVISED	DETAIL NO.
221	MARICOPA ASSOCIATION of GOVERNMENTS	STANDARD DETAIL ENGLISH	CURB AND GUTTER TRANSITION TYPE A TO TYPE C INTEGRAL ROLL CURB, GUTTER AND SIDEWALK	01-01-2011	221

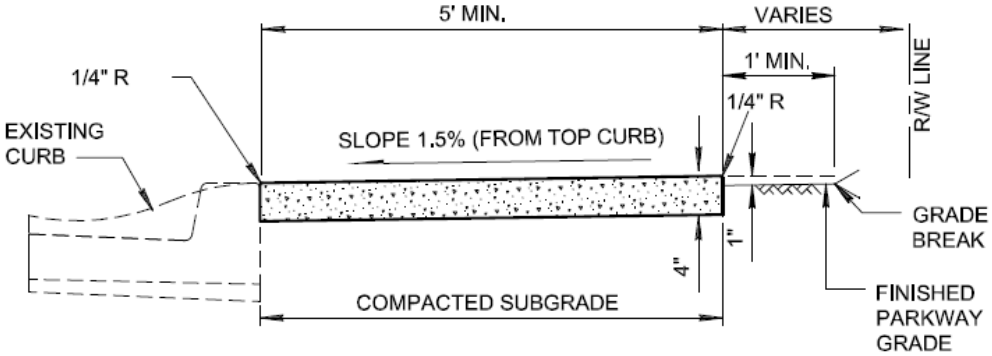

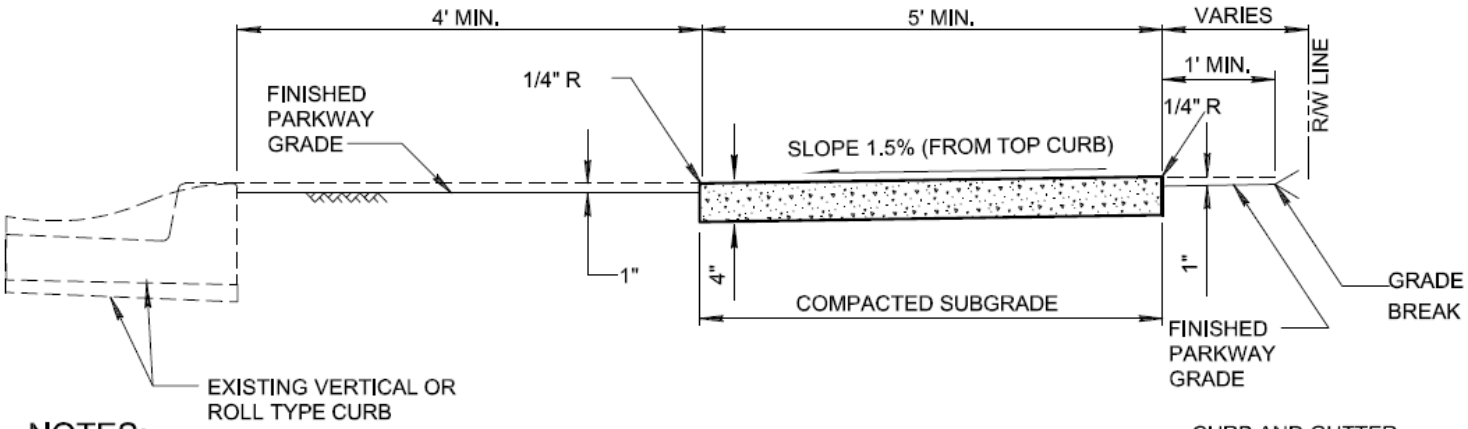

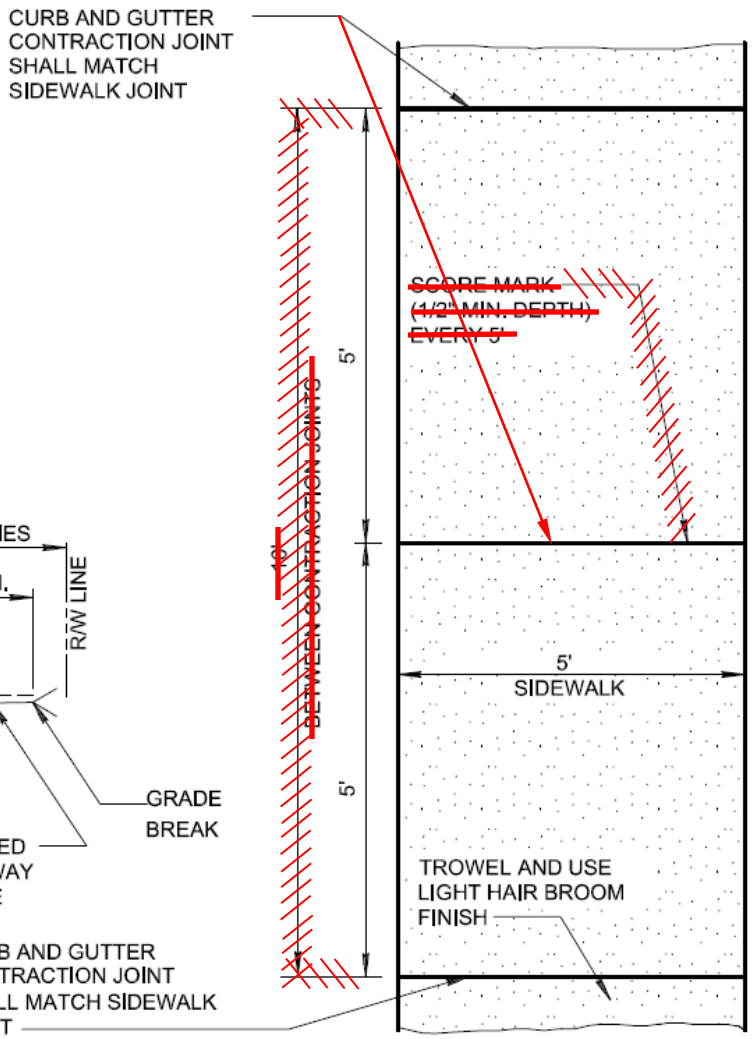

NOTES:

1. SIDEWALK CONSTRUCTION SHALL CONFORM TO SECTION 340.
2. EXPANSION JOINTS SHALL BE 1/2" BITUMINOUS TYPE PREFORMED EXPANSION JOINT FILLER, A.S.T.M. D-1751.
3. LARGE AGGREGATE, IN CONTRACTION JOINT SHALL BE SEPARATED TO A DEPTH OF 1", FINISH DEPTH SHALL BE A MINIMUM OF 3/4".
4. EXPANSION JOINTS SHALL CONFORM TO SECTION 340, BE INSTALLED PRIOR TO CONCRETE PLACEMENT, AND AT A MAXIMUM SPACING OF 50'. THE EXPANSION JOINT MUST PROVIDE COMPLETE SEPERATION OF THE SIDEWALK FROM ADJOINING CONCRETE.
5. CONCRETE SHALL BE CLASS 'B' PER SECTION 725.
6. WHEN SIDEWALK AND ADJACENT CURB ARE INSTALLED MONOLITHICALLY, THE MID-POINT SCORE LINE SHALL EXTEND ACROSS THE CURB.

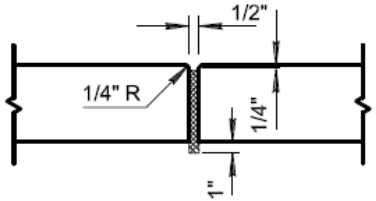

EXPANSION JOINT

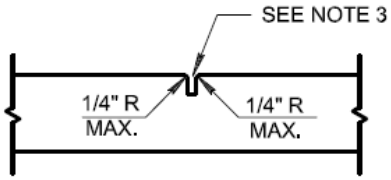

CONTRACTION JOINT

DETAIL NO.				REVISED	DETAIL NO.
230	MARICOPA ASSOCIATION of GOVERNMENTS	STANDARD DETAIL ENGLISH	SIDEWALKS	01-01-2011	230

Relationship of Map Unit Variability to Shrink–Swell Indicators

P.J. Thomas, J.C. Baker, L.W. Zelazny and D.R. Hatch

A study was conducted in the Culpeper Basin in northern Virginia to quantify soil shrink–swell indicators, to relate the indicators to soil properties, and to partition variability into map unit components.

UNIFIED SOIL CLASSIFICATION CHART: RELATIONSHIP BETWEEN SWELL INDEX AND ATTERBERG LIMITS

The following discussion pertains to the variability study conducted on five map units in Fauquier County. Map units are Davidson, Haymarket, Jackland, Waxpool, and Kelly. See Chapter V for explanation of study design.

RESULTS AND DISCUSSSION

Plasticity index, although highly correlated with liquid limit, did not correlate with swell index. However, when plotting swell index in against liquid limit and plasticity index on the Unified Classification System plasticity chart, a trend is observed (Figure B.1). Most soils with high and very high swell indices have high liquid limit and high PI. The line labeled "A" above a liquid limit of 50 separates soils of high plasticity, or fat clays (above line), from elastic clays, soils of low compressibility (below line). At liquid limits less than 50, line "A" separates soils of medium plasticity (above line) from soils of medium compressibility (below "A" line). Using this graph, critical lower limits of liquid limit and plasticity index can be ascertained. Soils that have high or very high shrink-swell potential would have liquid limits greater than 50 and plasticity indices greater than 30. Soils with moderate shrink-swell potential have liquid limits ranging from 25 to 50 and plasticity indices between 15 and 30. Low shrink-swell potentials are indicated by liquid limits less than 25 and plasticity indices less than 15.

SUMMARY

- Plotting liquid limit and plasticity index against swell index on the Unified Soil Classification System plasticity chart, a trend is observed. Almost all soils with high and very high shrink-swell potential have high liquid limit and plasticity index.
- In assessing risk for the map units using liquid limit and plasticity index as expansive soils predictors, low risk soils will have liquid limits less than 25 and PI less than 15. Moderate risk is indicated by liquid limit ranging from 25 to 50 and PI ranging from 15 to 30. High risk can be assumed if liquid limit is greater than 50 and PI is greater than 30.

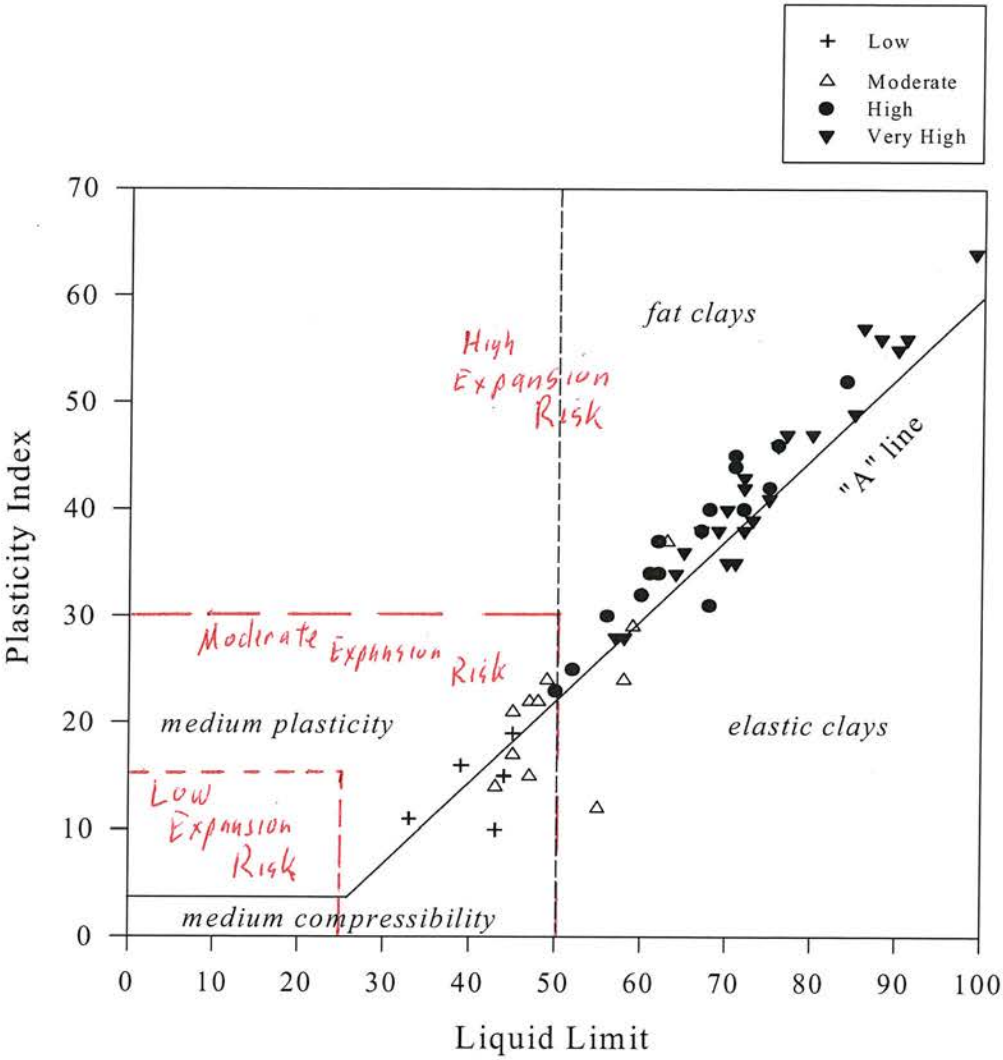

Figure B.1. Swell index as related to liquid limit and plasticity index.

The designer can conceive various alternative combinations of layers and thicknesses that will achieve the required design structural number (SN). Several different combinations are to be developed. The final design recommendation will be made after these alternative combinations are evaluated based on: 1.) Layered design analysis, 2.) Evaluation of the swell potential of the subgrade, and 3.) Construction cost analysis for the pavement.

10.2.4.3 Layered Design Analysis

The pavement structure is a layered system and each underlying layer affects the layers above it. The design equation presented above can be used to evaluate the adequacy of each layer to support the layers above it. The minimum SN for the pavement structure above a particular layer may be computed using the AASHTO formula and the resilient modulus (M_R) for that layer. The AASHTO guide (page II-36) should be referred to for a more complete explanation of the layered analysis approach.

A layered design analysis does not change the design structural number, but affects limits on some of the layer thicknesses. The most common impact on pavement designs is that it requires thicker layers of asphalt concrete on roadways with high traffic volume. A layered design analysis is required for Maricopa County Department of Transportation pavement designs.

10.2.4.3.1 Construction Constraints for Layer Thickness

The design thickness of asphalt concrete shall be rounded upward to the nearest ½-inch increment. The design thickness of granular base shall be rounded to the nearest 1-inch using a minimum layer thickness of 4-inches. The designed thickness of stabilized native or base shall be rounded to the nearest 1-inch with a minimum layer thickness of 6-inches.

10.2.4.4 Expansive and Collapsible Soils

Expansive soils in the roadway subgrade are detrimental to pavement performance in several ways. The resilient modulus of expansive soils is generally very low, expansion of the subgrade can reduce the ride quality and decrease the pavement's serviceability ratings, and differential movements can crack the pavement and propagate local failures causing increased maintenance costs. The pavement design process will incorporate the following measures in consideration of these detrimental effects.

Subgrade soils having a plasticity index above 15 with more than 20% passing the #200 sieve shall be considered potentially expansive. The engineer shall take additional samples or test existing samples as necessary to ensure that a minimum of 3 samples of any potentially expansive soil are tested. The treatment described in Table 10.2.8 will then be required based on the average of the three samples with the highest expansion potential. If it is not possible to obtain 3 samples representing a given expansive soil, the treatment given in Table 10.2.8 will be based on the test result of the sample with the highest expansion potential.

This method for treatment of swelling soils is a modification of a method presented in section 314 of the Airport Pavement Design and Evaluation Manual published by the Federal Aviation

Table 1. Soil expansivity prediction by liquid limit

Degree of expansion	w_L: % Liquid Limit	
	Chen[6]	IS 1498[4]
Low	<30	20–35
Medium	30–40	35–50
High	40–60	50–70
Very high	>60	70–90

Table 2. Soil expansivity predicted by plasticity index

Degree of expansion	I_p: % Plastic Index		
	Holtz and Gibbs[10]	Chen[6]	IS 1498[4]
Low	<20	0–15	<12
Medium	12–34	10–35	12–23
High	23–45	20–55	23–32
Very high	>32	>35	>32

(Table 3), free swell index (FSI) (Table 3), activity and per cent free swell.[4,9–14]

7. Chen[6] observed that there was no conclusive evidence of the correlation between swelling potential and shrinkage limit. Sridharan and Prakash[15] have also shown that the shrinkage limit can not be satisfactorily used to predict the swell potential of a soil and that the mechanisms governing the shrinkage and swelling are entirely different.

8. Holtz and Gibbs[10] proposed the per cent free swell test. It consists of pouring slowly 10 cm^3 of oven dried soil (passing a 425 μm sieve) into a 100 cm^3 measuring jar filled with distilled water and noting the volume of the soil after it comes to rest at the bottom of the jar. The free swell is then reported as the increase in the volume of the soil expressed as a percentage of the initial volume. The major drawback of this method, which is crude,[6] is that measuring 10 cm^3 of soil is not that easy and the procedure therefore introduces personal judgement as one more factor. It is normal to quantify 10 cm^3 as the volume occupied by 10 g of soil. This does not account for variations of density.

9. IS 1498[4] gives a criterion to predict the expansivity of soils, based on the free swell index.[16]

$$\mathrm{FSI} = \frac{(V_d - V_k)}{V_k} \times 100 \qquad (1)$$

where V_d is the sediment volume of 10 g of oven dried soil passing a 425 μm sieve placed in a 100 ml graduated measuring jar containing distilled water, and V_k is the sediment volume of 10 g of oven dried soil passing a 425 μm sieve placed in a 100 ml graduated measuring jar containing kerosene.

10. However, this method gives negative free swell indices for kaolinite-rich soils and may underestimate the expansivity of montmorillonitic soils, if the soils contain a significant amount of kaolinite clay material. To eliminate this difficulty, Sridharan *et al.*[17] have defined the modified free swell index (MFSI) as the ratio of equilibrium sediment volume (V_d) after 10 g of oven dried soil is mixed thoroughly with the distilled water to form a soil–water suspension of 100 ml initial volume in a 100 ml measuring jar and allowed to settle, to the dry weight of the soil. Thus

$$\mathrm{MFSI} = \frac{V_d}{10} \qquad (2)$$

11. Sridharan *et al.*[18] have observed that the sediment volume occupied by unit weight of dry soil in distilled water together with that in carbon tetrachloride provides useful information about the soil expansivity and nature of the soil type—expansive/non-expansive/combination of both (Table 4).

12. The predictive capability of the MFSI is evident from the following statistical illustrations. About 32 soils from various parts of India, 16 of them kaolinitic ($25\% \leqslant w_L \leqslant 100\%$) and the remaining 16 montmorillonitic ($47\% \leqslant w_L \leqslant 124\%$), were considered for the analysis (data from Sridharan *et al.*[19,20]). These soils are placed on the plasticity chart as shown in Fig. 1. It can be noted that both the kaolinitic

Table 3. Soil expansivity predicted by other measures

Degree of expansion	Colloid content[10]: % minus 0·001 mm	Shrinkage limit[10]: %	Shrinkage index[4]: %	Free swell index[4]: %	Per cent expansion in oedometer* as per Holtz and Gibbs[10]	Per cent expansion in oedometer† as per Seed *et al.*[12]
Low	<17	>13	<15	<50	<10	0–1·5
Medium	12–27	8–18	15–30	50–100	10–20	1·5–5·0
High	18–37	6–12	30–60	100–200	20–30	5–25
Very high	>27	<10	>60	>200	>30	>25

* From dry to saturated condition under a surchare of 7 kPa.
† From compacted, saturated condition under a surcharge of 7 kPa.
Note: Shrinkage index = (plastic limit − shrinkage limit).

SECTION 711
PAVING ASPHALT

711.1 GENERAL:

The asphalt shall be produced from crude asphalt petroleum or a mixture of refined liquid asphalt and refined solid asphalt. It shall be free from ad-mixture with any residues obtained by the artificial distillation of coal, coal tar, or paraffin oil and shall be homogeneous and free from water.

Polymer modified asphalt cement shall be produced from crude asphalt petroleum and a polymer or blend of polymers mixed to produce a homogeneous material free from water.

Asphalt shall not be heated during the process of its manufacture, storage, or during construction so as to cause injury as evidence by the formation of carbonized particles.

711.2 TESTING REQUIREMENTS:

Paving asphalt shall be classified by the Performance Grading System and shall conform to the requirements set forth in Table 711-1 and ~~ASTM D6376~~ AASHTO M-320 with the PAV temperature changes noted herein this table.

On all Grades Flash Point Temperature AASHTO T48: Minimum 230 °C and Mass Loss, Maximum 1.00 percent.

TABLE 711-1				
PERFORMANCE GRADING SYSTEM				
	PG 58-22	PG 64-16	PG-70-10	PG 76-16
Original Asphalt				
Viscosity, ~~ASTM D4402~~ AASHTO T316 (Note 1) Max. 3 Pa-s, Test Temp, °C	135	135	135	135
Dynamic Shear ~~ASTM D7175~~ AASHTO T315 (Note 2) G*/Sin δ, Min., 1.0 kPa Test Temp. @ 10 rad/s, °C	58	64	70	76
Rolling Thin Film Oven Residue (~~ASTM D2872~~ AASHTO T240)				
Mass Loss, Maximum %	1.0	1.0	1.0	1.0
Dynamic Shear ~~ASTM D7175~~ AASHTO T315 G*/Sin δ, Min., 2.20 kPa Test Temp. @ 10 rad/s, °C	58	64	70	76
Pressure Aging Vessel Residue (~~ASTM D6521~~ AASHTO R28)				
PAV Aging Temperature, °C	100	100	110	110
Dynamic Shear ~~ASTM D7175~~ AASHTO T315 G*·Sin δ, Max., 5000 kPa Test Temp. @ 10 rad/s, °C	22	28	34	34

Creep Stiffness, ~~ASTM D6648~~ AASHTO T313 (Note 3) S, Maximum, 300.0 Mpa *m*-value, Minimum, 0.300 Test Temp. @60s, °C	-12	-6	0	-6
Direct Tension, ~~ASTM D6723~~AASHTO T314 (Note 3) Failure Strain, Minimum 1.0% Test Temp. @ 1.0 mm/min. °C	-12	-6	0	-6

~~On all Grades Flash Point Temperature ASTM D92AASHTO T48: Minimum 230 °C and Mass Loss, Maximum 1.00 percent.~~

NOTES:

(1) This requirement may be waved at the discretion of the specifying agency if the supplier warrants that the asphalt binder can be adequately pumped and mixed at temperatures that meet all applicable safety standards.

(2) For quality control of unmodified asphalt cement production, measurement of the viscosity of the original asphalt cement may be substituted for dynamic shear measurements of G*/sin(d) at test temperatures when the asphalt is a Newtonian fluid. Any suitable standard means of viscosity measurement may be used, including capillary or rotational viscometer (~~ASTM D4402~~ AASHTO T210 or AASHTO T202).

(3) If the Creep Stiffness is below 300 MPa, the direct tension test is not required. If the Creep Stiffness is between 300 and 600 MPa, the direct tension failure strain requirement can be used in lieu of the Creep Stiffness requirement. Direct tension test is recommended for polymer modified asphalt binders. The m-value requirement must be satisfied in all cases.

Polymer modified paving asphalt shall be classified by the Performance Grading System and shall conform to the requirements set forth in Table 711-2 and AASHTO M320 with the PAV temperature changes noted herein this table.

On all Grades Flash Point Temperature AASHTO T48: Minimum 230 °C and Mass Loss, Maximum 1.00 percent.

TABLE 711-2				
PERFORMANCE GRADING SYSTEM				
	PG 64-28P	PG-76-22P	PG76-22TR Type 1 (Note 4)	PG76-22TR Type 2 (Note 4)
Viscosity ,AASHTO T316 (Note 1) Max. 3 Pa-s, Test Temp, °C	135	135	135	135
Dynamic Shear AASHTO T315 (Note 2) G*/Sin δ, Min., 1.0 kPa Test Temp. @ 10 rad/s, °C	64	76	76	76
Elastic recovery D-6084 procedure "B" @ 25°C "B" @ 10°C	65	65	55	55
Phase Angle, Max	75	75	75	75
Separation test, Texas 540 % Max	4	4	4	4
Rolling Thin Film Oven Residue (AASHTO T-240)				

Mass Loss, Maximum %	1.0	1.0	1.0	1.0
Dynamic Shear AASHTO T315 G*/sin δ, Min., 2.20 kPa Test Temp. @ 10 rad/s, °C	64	76	76	76
PAV Aging Residue Temperature, °C	100	110	110	110
Tests from PAV Residue:				
Dynamic Shear AASHTO T315 G*sin δ, Max., 5000 kPa Test Temp. @ 10 rad/s, °C	22	31	31	31
Mass Loss, AASHTO T240 Weight % Max	1.0	1.0	1.0	1.0
M –value AASHTO T313 0300 Min	-18	-12	-12	-12
Creep Stiffness, AASHTO T313 S, Maximum, .300~~.0~~ Mpa *m*-value, Minimum, 0.300 Test Temp. @60s, °C	-18	-12	-12	-12
Direct Tension, AASHTO T314 (Note 3) Failure Strain, Minimum 1.0% Test Temp. @ 1.0 mm/min. °C	-18	-12	-12	-12
Solubility in Trichloroethylene % minimum ASTM D 2042	–	–	97.5	–

~~On all Grades Flash Point Temperature AASHTO T48: Minimum 230 °C and Mass Loss, Maximum 1.00 percent.~~

NOTES:

(1) This requirement may be waved at the discretion of the specifying agency if the supplier warrants that the asphalt binder can be adequately pumped and mixed at temperatures that meet all applicable safety standards.

(2) For quality control of unmodified asphalt cement production, measurement of the viscosity of the original asphalt cement may be substituted for dynamic shear measurements of ~~G*/sin(d)~~ G*/Sin δ, at test temperatures when the asphalt is a Newtonian fluid. Any suitable standard means of viscosity measurement may be used, including capillary or rotational viscometer (AASHTO T210 or AASHTO T202).

(3) If the Creep Stiffness is below 300 MPa, the direct tension test is not required. If the Creep Stiffness is between 300 and 600 MPa, the direct tension failure strain requirement can be used in lieu of the Creep Stiffness requirement. Direct tension test is recommended for polymer modified asphalt binders. The m-value requirement must be satisfied in all cases.

(4) "TR" binders shall have 9%to 11% reclaimed tire rubber and enough virgin polymer to meet all performance grade criteria specified. The blend percentages shall be listed on the Certificate of Compliance by the manufacturer. Type 1 shall meet solubility limits.

~~Design Note: Performance Grade Asphalts are selected for certain reliabilities with respect to high and low pavement temperatures. The specified characteristics are based upon a loading frequency that approximates vehicle speeds of approximately 90 km/hr. Since all binders are frequency dependent, the designer may consider increasing the high temperature requirement for slow transient and standing loads, such as intersection loading. The high temperature requirement may also be increased for excessive numbers of equivalent single axle loads.~~

711.3 TEST REPORT AND CERTIFICATION:

At the time of delivery of each shipment of asphalt, the supplier supplying the material shall deliver to the purchaser 3 certified copies of the test report which shall indicate the name of the refinery and supplier, type and grade of asphalt delivered, date and point of delivery, quantity delivered, delivery ticket number, purchase order number, and results of the above specified tests. The test report shall be signed by an authorized representative of the supplier certifying that the product delivered conforms to the specifications for the type and grade indicated.

Until the certified test reports and samples of the material have been checked by the Engineer, that material will be only tentatively accepted by the Contracting Agency. Final acceptance will be dependent upon the determination of the Engineer that the material involved fulfills the requirements prescribed. The certified test reports and the testing required in connection with the reports shall be at no additional cost to the Contracting Agency.

711.4 TEMPERATURES:

Paving asphalt shall be heated in such a manner that steam or hot oils will not be introduced directly into the paving asphalt during heating.

711.5 CONVERSION OF QUANTITIES:

When pay quantities of paving asphalt are determined from volumetric measurements, the volumetric measurement at any temperature shall be reduced to the volume the material would occupy at 60 degrees F. in accordance with ASTM D-1250. In converting volume to weight, the computations shall be based on Table 711-3.

TABLE 711-3		
ASPHALT CEMENT QUANTITY CONVERSION		
Grade of Material	Gals. Per Ton of 60 °F.	Lbs. Per Gal at 60 °F.
PG 58-22	236	8.47
PG 64-16	235	8.51~~50~~
PG 70-10	235	8.51~~50~~
PG 64-28P	236	8.47
PG 76-22P,TR	236	8.47
PG 76-16	233	8.58~~60~~

- End of Section -

DRAFT

SECTION 711
PAVING ASPHALT

711.1 GENERAL:

The asphalt shall be produced from crude asphalt petroleum or a mixture of refined liquid asphalt and refined solid asphalt. It shall be free from ad-mixture with any residues obtained by the artificial distillation of coal, coal tar, or paraffin oil and shall be homogeneous and free from water.

Polymer modified asphalt cement shall be produced from crude asphalt petroleum and a polymer or blend of polymers mixed to produce ahomogeneous material free from water.

Asphalt shall not be heated during the process of its manufacture, storage, or during construction so as to cause injury as evidence by the formation of carbonized particles.

711.2 TESTING REQUIREMENTS:

Paving asphalt shall be classified by the Performance Grading System and shall conform to the requirements set forth in Table 711-1 and AASHTO M-320 with the PAV temperature changes noted herein this table.

On all Grades Flash Point Temperature AASHTO T48: Minimum 230 °C and Mass Loss, Maximum 1.00 percent.

TABLE 711-1				
PERFORMANCE GRADING SYSTEM				
	PG 58-22	PG 64-16	PG-70-10	PG 76-16
Original Asphalt				
Viscosity, AASHTO T316 (Note 1) Max. 3 Pa-s, Test Temp, °C	135	135	135	135
Dynamic Shear AASHTO T315 (Note 2) G*/Sin δ, Min., 1.0 kPa Test Temp. @ 10 rad/s, °C	58	64	70	76
Rolling Thin Film Oven Residue (AASHTO T240)				
Mass Loss, Maximum %	1.0	1.0	1.0	1.0
Dynamic Shear AASHTO T315 G*/Sin δ, Min., 2.20 kPa Test Temp. @ 10 rad/s, °C	58	64	70	76
Pressure Aging Vessel Residue (AASHTO R28)				
PAV Aging Temperature, °C	100	100	110	110
Dynamic Shear AASHTO T315 G*·Sin δ, Max., 5000 kPa Test Temp. @ 10 rad/s, °C	22	28	34	34
Creep Stiffness, AASHTO T313 (Note 3) S, Maximum, 300.0 Mpa *m*-value, Minimum, 0.300 Test Temp. @60s, °C	-12	-6	0	-6
Direct Tension, AASHTO T314 (Note 3) Failure Strain, Minimum 1.0% Test Temp. @ 1.0 mm/min. °C	-12	-6	0	-6

NOTES:

(1) This requirement may be waved at the discretion of the specifying agency if the supplier warrants that the asphalt binder can be adequately pumped and mixed at temperatures that meet all applicable safety standards.

(2) For quality control of unmodified asphalt cement production, measurement of the viscosity of the original asphalt cement may be substituted for dynamic shear measurements of G*/sin(d) at test temperatures when the asphalt is a Newtonian fluid. Any suitable standard means of viscosity measurement may be used, including capillary or rotational viscometer (AASHTO T210 or AASHTO T202).

(3) If the Creep Stiffness is below 300 MPa, the direct tension test is not required. If the Creep Stiffness is between 300 and 600 MPa, the direct tension failure strain requirement can be used in lieu of the Creep Stiffness requirement. Direct tension test is recommended for polymer modified asphalt binders. The m-value requirement must be satisfied in all cases.

Polymer modified paving asphalt shall be classified by the Performance Grading System and shall conform to the requirements set forth in Table 711-2 and AASHTO M320 with the PAV temperature changes noted herein this table.

On all Grades Flash Point Temperature AASHTO T48: Minimum 230 °C and Mass Loss, Maximum 1.00 percent.

TABLE 711-2				
PERFORMANCE GRADING SYSTEM				
	PG 64-28P	PG-76-22P	PG76-22TR Type 1 (Note 4)	PG76-22TR Type 2 (Note 4)
Viscosity ,AASHTO T316 (Note 1) Max. 3 Pa-s, Test Temp, °C	135	135	135	135
Dynamic Shear AASHTO T315 (Note 2) G*/Sin δ, Min., 1.0 kPa Test Temp. @ 10 rad/s, °C	64	76	76	76
Elastic recovery D-6084 procedure “B” @ 25°C “B” @ 10°C	65	65	55	55
Phase Angle, Max	75	75	75	75
Separation test, Texas 540 % Max	4	4	4	4
Rolling Thin Film Oven Residue (AASHTO T-240)				
Mass Loss, Maximum %	1.0	1.0	1.0	1.0
Dynamic Shear AASHTO T315 G*/sin δ, Min., 2.20 kPa Test Temp. @ 10 rad/s, °C	64	76	76	76
PAV Aging Residue Temperature, °C	100	110	110	110
Tests from PAV Residue:				
Dynamic Shear AASHTO T315 G*sin δ, Max., 5000 kPa Test Temp. @ 10 rad/s, °C	22	31	31	31
Mass Loss, AASHTO T240 Weight % Max	1.0	1.0	1.0	1.0
M –value AASHTO T313 0300 Min	-18	-12	-12	-12

DRAFT

Creep Stiffness, AASHTO T313 S, Maximum, .300 Mpa *m*-value, Minimum, 0.300 Test Temp. @60s, °C	-18	-12	-12	-12
Direct Tension, AASHTO T314 (Note 3) Failure Strain, Minimum 1.0% Test Temp. @ 1.0 mm/min. °C	-18	-12	-12	-12
Solubility in Trichloroethylene % minimum ASTM D 2042	–	–	97.5	–

NOTES:

(1) This requirement may be waved at the discretion of the specifying agency if the supplier warrants that the asphalt binder can be adequately pumped and mixed at temperatures that meet all applicable safety standards.

(2) For quality control of unmodified asphalt cement production, measurement of the viscosity of the original asphalt cement may be substituted for dynamic shear measurements of G*/Sin δ, at test temperatures when the asphalt is a Newtonian fluid. Any suitable standard means of viscosity measurement may be used, including capillary or rotational viscometer (AASHTO T210 or AASHTO T202).

(3) If the Creep Stiffness is below 300 MPa, the direct tension test is not required. If the Creep Stiffness is between 300 and 600 MPa, the direct tension failure strain requirement can be used in lieu of the Creep Stiffness requirement. Direct tension test is recommended for polymer modified asphalt binders. The m-value requirement must be satisfied in all cases.

(4) "TR" binders shall have 9%to 11% reclaimed tire rubber and enough virgin polymer to meet all performance grade criteria specified. The blend percentages shall be listed on the Certificate of Compliance by the manufacturer. Type 1 shall meet solubility limits.

711.3 TEST REPORT AND CERTIFICATION:

At the time of delivery of each shipment of asphalt, the supplier supplying the material shall deliver to the purchaser 3 certified copies of the test report which shall indicate the name of the refinery and supplier, type and grade of asphalt delivered, date and point of delivery, quantity delivered, delivery ticket number, purchase order number, and results of the above specified tests. The test report shall be signed by an authorized representative of the supplier certifying that the product delivered conforms to the specifications for the type and grade indicated.

Until the certified test reports and samples of the material have been checked by the Engineer, that material will be only tentatively accepted by the Contracting Agency. Final acceptance will be dependent upon the determination of the Engineer that the material involved fulfills the requirements prescribed. The certified test reports and the testing required in connection with the reports shall be at no additional cost to the Contracting Agency.

711.4 TEMPERATURES:

Paving asphalt shall be heated in such a manner that steam or hot oils will not be introduced directly into the paving asphalt during heating.

711.5 CONVERSION OF QUANTITIES:

DRAFT

When pay quantities of paving asphalt are determined from volumetric measurements, the volumetric measurement at any temperature shall be reduced to the volume the material would occupy at 60 degrees F. in accordance with ASTM D-1250. In converting volume to weight, the computations shall be based on Table 711-3.

TABLE 711-3		
ASPHALT CEMENT QUANTITY CONVERSION		
Grade of Material	Gals. Per Ton of 60 °F.	Lbs. Per Gal at 60 °F.
PG 58-22	236	8.47
PG 64-16	235	8.51
PG 70-10	235	8.51
PG 64-28P	236	8.47
PG 76-22P,TR	236	8.47
PG 76-16	233	8.58

- End of Section -

DRAFT

Chandler • Arizona
Where Values Make The Difference

MEMORANDUM **Case # 13-15**

DATE: July 10th, 2013

TO: MAG Specifications and Details Committee Members

FROM: Warren White, City of Chandler Representative

SUBJECT: Proposed Revisions to MAG Sections 601, 603, 615, 618, 735, 101 and Dtl 200

This is an update to the case package submitted at the May meeting. It has been expanded to include proposed changes needed for both flexible and rigid pipe standards. Discussion at previous Water/Sewer Working group meetings includes the following direction:

1) Transform Section 603, Installation of HDPE Pipe, into a new flexible pipe Trench Excavation, Backfill and Compaction specification that is specific to flexible pipe.
2) Revise Section 601, Trench Excavation, Backfilling and Compaction, to be specific to rigid pipe.
3) Revise the Bedding Detail on Detail 200-2, to match ASTM terminology. Graphical changes to clarify new defined areas. Also, revisions to Detail 200-1 for consistent terminology.
4) Revise and add certain trench excavation related definitions and terms in Section 101, to match ASTM: Backfill (initial, final), Bedding, Foundation, Haunching, Springline and Pipe Embedment Zone.
5) Revise Installation Specifications (615, 618) for flexible and rigid requirements.
6) Revise Installation Specifications (615, 618) to include post installation testing requirements.
7) Revise Section 601 and 603 for new terminology and consistency.
8) Also, related to testing, revise the Material Specification for Reinforced Concrete Pipe, Section 735, RCP. Remove 735.7 item (G) hairline crack. It is not necessary and with item (F). Typically hairline cracks "repair" themselves through a process called autogenous healing.

Here is an overview of related (proposed) Sections:

	TRENCH EXCAVATION, BACKFILL AND COMPACTION	INSTALLATION	MATERIAL
Flexible Pipe	**Section 603** (Revised title, was Installation of HDPE)	**Section 615 - Sewer**	Section 738 - HDPE
		Section 618 - Storm	Section 739 - SRPE
		Section 610 - Water	Section 740 - Polypropylene
			Section 745 - PVC
Rigid Pipe	**Section 601**	**Section 615 - Sewer**	**Section 735 - RCP**
		Section 618 - Storm	Section 736 - Non-RCP
		Section 610 - Water	Section 743 - VCP
			Section 750 - DIP
			Section 752 - ACP
			Section 785 - Concrete

Proposed Trench Excavation Definitions for MAG Section 101

B. Davis 7-1-13

Haunching – The area of a pipe trench backfill envelope that provides the majority of resistance against soil and traffic loadings. The haunching area is defined as the zone between the bottom of the pipe and the centerline, or springline, of the pipe.

Springline – The horizontal centerline of a pipe in a pipe trench backfill envelope. The springline separates the haunching area from the initial backfill in the pipe embedment zone.

Bedding - (current MAG definition: Is the material placed in the area from the bottom of the trench to 1 foot above the top of the pipe or conduit.) *New definition proposed*: A backfill material layer placed on top of the pipe foundation to the bottom of the pipe, typically 4 – 6 inches in height. The bedding establishes line and grade to provide firm, but not hard, pipe support.

Foundation – (current MAG definition: For buildings or structures, this will be the substructure. For pipe this will be the native material or prepared material on which the pipe rests: normally, this is the bottom grade line of the trench). *New definition proposed*: For a pipe trench the foundation is defined as the native or prepared material upon which the bedding material is placed.

Initial backfill – The area of a pipe trench backfill envelope defined as the area between the springline and a minimum of 12 inches above the crown of the pipe.

Final backfill - The area of a pipe trench backfill envelope defined as the area above initial backfill to the top of the trench or to the bottom of the road base material. Final backfill is typically compacted native material.

Pipe embedment zone - The area of a pipe trench backfill envelope, consisting of the bedding, haunching, and initial backfill areas.

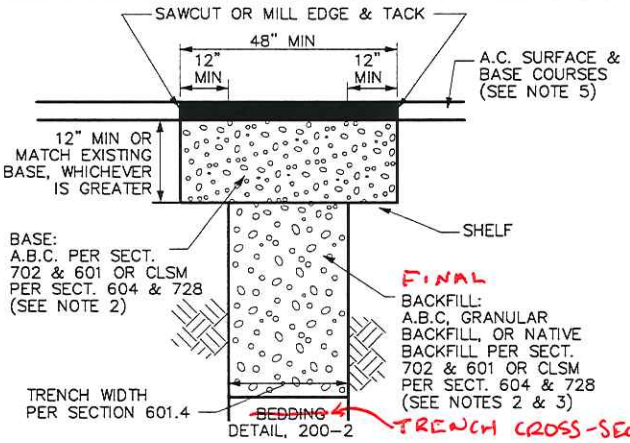

"T TOP" TRENCH REPAIR

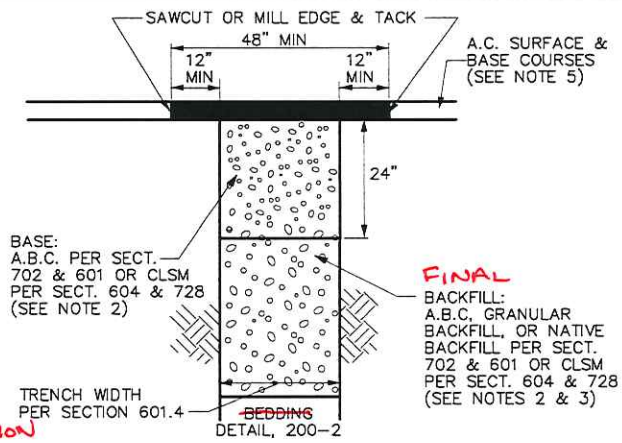

TYPE "A" TRENCH REPAIR

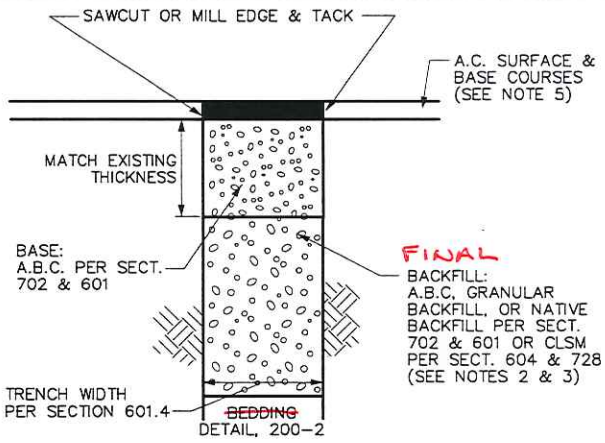

TYPE "B" TRENCH REPAIR

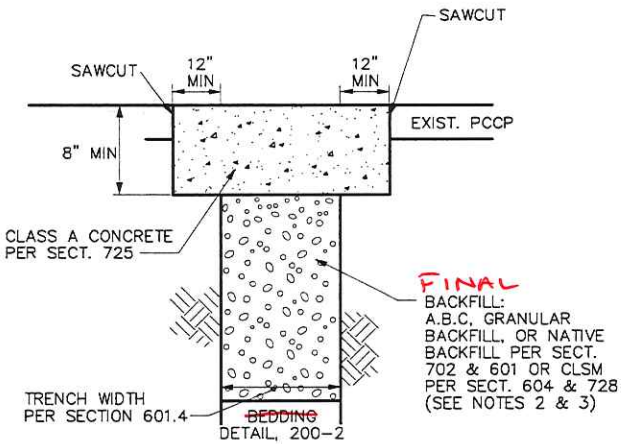

TYPE "C" TRENCH REPAIR
(TRENCH IN PORTLAND CEMENT CONCRETE PAVEMENT)

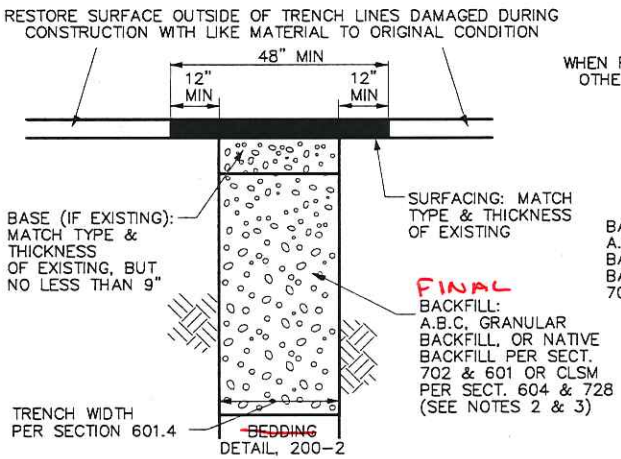

TYPE "D" TRENCH REPAIR
(TRENCH NOT UNDER CONCRETE OR ASPHALT PAVEMENT)

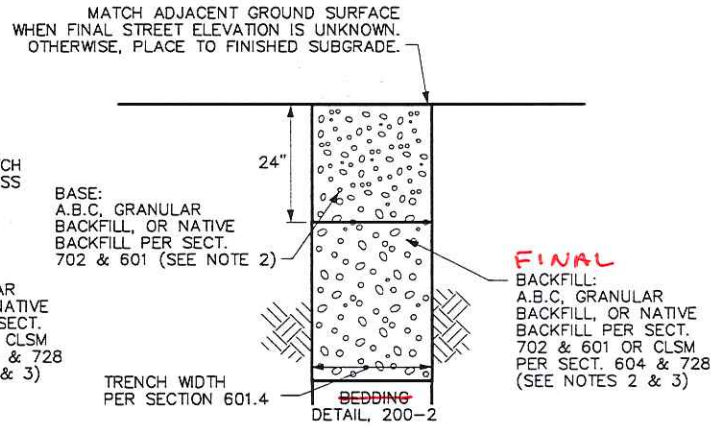

TYPE "E" TRENCH REPAIR
(TRENCH IN FUTURE ROADWAY PRISM OR ALLEY)

NOTES:

1. PAVEMENT MATCHING AND SURFACE REPLACEMENT SHALL BE IN ACCORDANCE WITH SECTION 336.
2. TYPE OF BACKFILL AND BASE (IF APPLICABLE) SHALL BE AS NOTED HEREIN UNLESS OTHERWISE SPECIFIED IN CONTRACT DOCUMENTS. IF NOT SPECIFIED, CLSM SHALL BE 1/2-SACK PER SECTIONS 604 AND 728.
3. TRENCHES LESS THAN 24" WIDE SHALL BE BACKFILLED FROM TOP OF BEDDING TO BOTTOM OF SURFACING MATERIALS WITH 1/2-SACK CLSM PER SECTIONS 604 AND 728.
4. ~~BASE, BACKFILL, BEDDING AND FOUNDATION~~ BASE, FINAL BACKFILL AND PIPE EMBEDMENT COMPACTION REQUIREMENTS SHALL BE IN ACCORDANCE WITH SECTION 601.
5. ASPHALT CONCRETE SURFACE AND BASE COURSES SHALL COMPLY WITH SECTION 336.2.4.1 UNLESS OTHERWISE SPECIFIED IN CONTRACT DOCUMENTS.
6. USE TYPE "A" FOR LONGITUDINAL TRENCH REPAIR AND USE "T-TOP" FOR TRANSVERSE TRENCH REPAIR (SEE DETAIL 200-2) UNLESS OTHERWISE SPECIFIED IN CONTRACT DOCUMENTS. TYPE "B" TRENCH REPAIR MAY BE USED FOR TRANSVERSE TRENCH REPAIR IF SPECIFIED BY THE AGENCY.
7. PROVIDE MINIMUM 12" WIDE SHELF AS SHOWN IN "T-TOP" TRENCH REPAIR AT ENDS OF TYPE "A" TRENCH REPAIR EXCEPT WHERE EDGE ABUTS EXISTING CONCRETE.
8. USE "T-TOP" PAVEMENT REPLACEMENT WHERE A TRENCH IS NOT PARALLEL TO A STREET OR GOES THROUGH AN INTERSECTION.
9. SEE DETAIL 200-2 FOR REMNANT PAVEMENT REMOVAL REQUIREMENTS.
10. EXPOSED COPPER OR POLYETHYLENE WATER PIPE UP TO 2" IN DIAMETER IN TRENCHES TO BE BACKFILLED WITH CLSM SHALL BE WRAPPED WITH MINIMUM 3/4" THICK PREFORMED PIPE-COVERING FOAM INSULATION BEFORE PLACING CLSM.

DETAIL NO.		STANDARD DETAIL		REVISED	DETAIL NO.
200-1	MARICOPA ASSOCIATION of GOVERNMENTS	ENGLISH	BACKFILL, PAVEMENT AND SURFACE REPLACEMENT	~~01-01-2010~~	200-1

LONGITUDINAL TRENCH

(TRENCH IN PAVEMENT PARALLEL TO TRAFFIC)

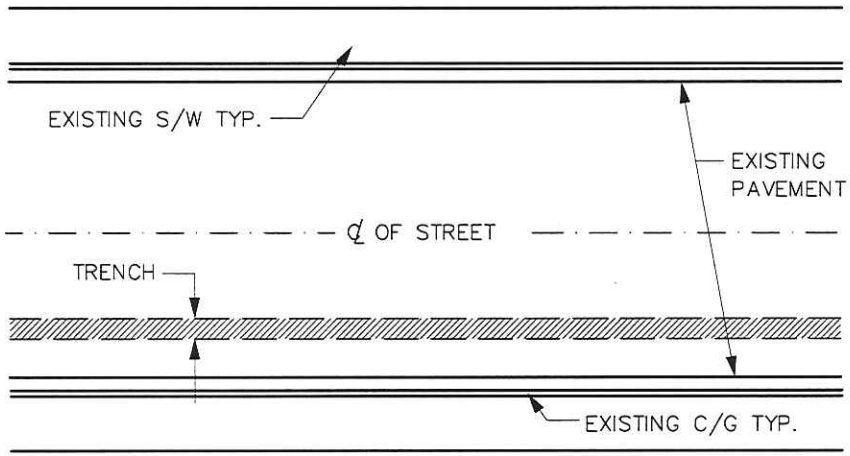

TRANSVERSE TRENCH

(TRENCH IN PAVEMENT NOT PARALLEL TO TRAFFIC)

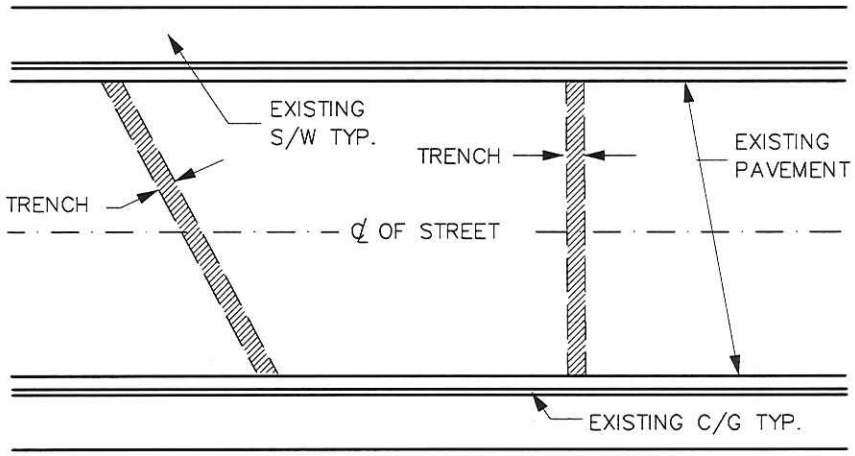

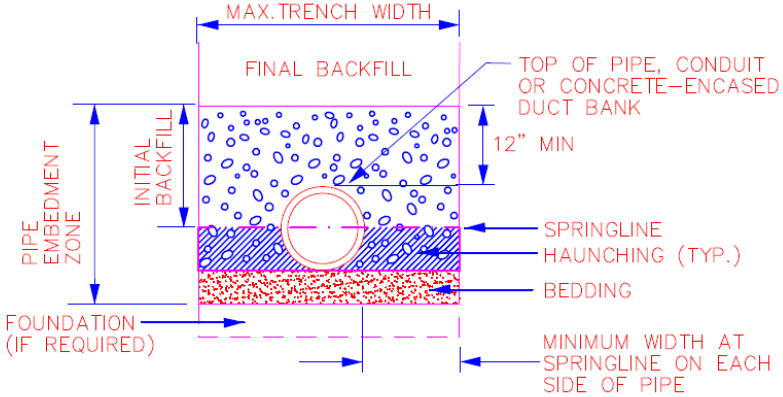

TRENCH CROSS-SECTION DETAIL

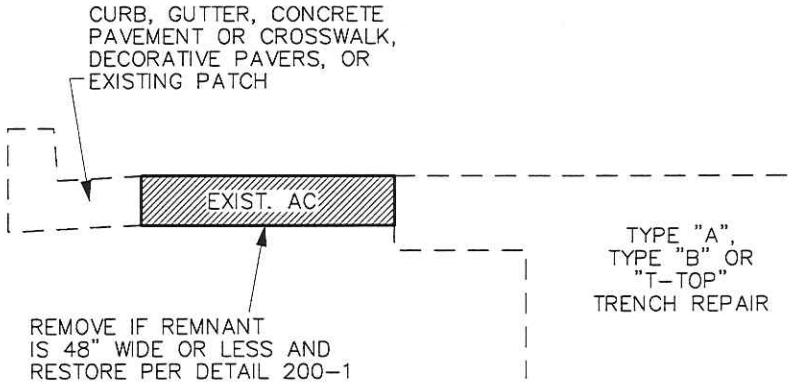

REMNANT PAVEMENT REMOVAL

NOTES:

1. SEE SECTION 601 FOR RIGID PIPE INSTALLATION AND 603 FOR FLEXIBLE PIPE INSTALLATION.

2. ~~1.~~ SEE MAG DETAIL 200-1 FOR DETAILED TRENCH REPAIR REQUIREMENTS FOR TRENCH TYPES NOTED HEREIN.

3. ~~2.~~ SEE MAG DETAIL 211 FOR REQUIREMENTS REGARDING THE USE OF PLATING TRANSVERSE TRENCHES. USE OF STEEL PLATES SHALL NOT EXCEED 72 HOURS AFTER COMPLETION OF BACKFILL AND PRIOR TO FINAL PATCHING.

DETAIL NO.		STANDARD DETAIL		REVISED	DETAIL NO.
200-2	MARICOPA ASSOCIATION of GOVERNMENTS	ENGLISH	BACKFILL, PAVEMENT AND SURFACE REPLACEMENT	~~01-01-2010~~	200-2

Case 13-16:
Bob Herz comments in blue
Arvid Veidmark comments in green

Revised: 7/30/2013 4:05 PM

SECTION 602

TRENCHLESS INSTALLATION OF STEEL CASING

602.1 DESCRIPTION:

The Contractor shall furnish all labor, material and equipment as required for the trenchless operation to install steel casing for water lines, sewer lines and dry utilities using horizontal earth auger boring, hand tunneling or pipe ramming.

In the performance of the work, the Contractor shall comply with the lawful requirements of the affected Contracting Agencies, owners of public utilities and any other facilities which might be endangered by trenchless operations.

~~The Contractor shall comply with any Project Special Conditions or Local Jurisdiction/Agency requirements regarding work time constraints or restrictions.~~ I recommend leaving this in. Gives clarification. Complying with Project Special Provisions does not need to be stated in this section. Complying with local jurisdiction/Agency requirements regarding work time constraints is required by Section 108.5 Limitation of Operations. The requirements do not need to be repeated in this section.

602.2 MATERIALS:

The steel casing wall thickness, diameter, and yield strength shall be as indicated on the project plans or special provisions.

~~**MAG**~~
~~Unless otherwise provided for by the Contracting or Permitting Agency the minimum wall thickness for steel casing shall be 3/8 inch, or greater as determined by casing diameter, soil condition, depth, carrier pipe, facilities being bore under and installation method.~~

The casing shall consist of welded steel plate conforming to ~~(~~ASTM A283 ~~Grade C~~ or ASTM A252~~)~~ rolled into a can. Shop and field joints shall be butt weld. Fabrication and welding shall be in accordance with AWWA C-200. ~~Weld or hydrostatic testing is not required.~~ I recommend we leave this in, I have had issues at times with designer's who think the casing is a pressure vessel and want to test it as such. I also recommend a minimum wall thickness be stated to give designers a base to start from. The sentence '*Weld or hydrostatic testing is not required.*' effectively cancels out the requirements of the prior sentence '*Fabrication and welding shall be in accordance with AWWA C-200*.' Is there an alternate fabrication specification that can be substituted for AWWA C-200? If an agency does not want to require testing it can do so by special provision. To have fabrication requirements and then indicate that no verification of compliance is to be done means that it is only a suggestion not a requirement.

602.3 TRENCHLESS OPERATION:

Before starting operations, the Contractor shall submit in accordance with Section 105.2, detailed shop drawing of the bore pit and receiving pit~~excavation,~~ shoring, the casing, bulkheads, and the carrier pipe installation ~~materials and~~ method. ~~including casing spacers, wood skids and rail systems.~~

The bore and~~&~~ reception pits for the trenchless operation shall be shored to safeguard existing sub-structure and surface improvements and to protect against ground movement.

On steel casing 37-inches (I.D.) or larger grout connections shall be provided at a maximum spacing of every 20-feet located at 12 o'clock in the steel casing. Upon completion of the boring operation, the contractor shall inspect each grout hole to determine if grouting is required. Any void greater than 2-inches outside the casing will require the boring contractor to grout fill the void. After grouting the grout holes shall be closed with a threaded plug.

Steel casing smaller than 36-inches (O.D.) installed by horizontal earth auger boring, hand tunneling or pipe

ramming will not require outside grouting unless caving or earth movement occurs.

602.4 DEWATERING:

All water encountered during the trenchless operation shall be disposed of by the Contractor in a manner that will not damage public or private property or create a nuisance or health problem. The cost of furnishing pumps, pipes and equipment for dewatering shall be considered incidental to the work and no additional payment shall be made.

602.5 CARRIER PIPE PLACEMENT:

The tolerances allowed for the alignment and grade of carrier pipe shall comply with requirements of Section 610, 615 or 618 as applicable. The Contractor shall be responsible to obtain the required line and grade for the carrier pipe, the carrier pipe shall not contact or rest on the casing.

Pressurized carrier pipes, (i.e. water, gas, force main) shall be placed using casing spacers, wood skids or steel pipes for rails. Casing spacers shall be installed 3 per joint minimum with 8-foot maximum spacing. The annular space between the casing and carrier line shall be left empty unless otherwise directed. When the annular space is to be filled, 3/8-inch pea gravel shall be used.

Gravity carrier pipes, (i.e. sewer, storm drain, irrigation) shall be placed using wood skids or steel pipes for rails. The annular space between the casing and carrier line shall be left empty unless otherwise directed. When the annular space is to be filled, 3/8-inch pea gravel shall be used.

Bulkheads consisting of brick and mortar or concrete shall be constructed on the ends of the casing; bulkheads shall be a minimum of 8-inches thick. Alternative casing end closures may be substituted for brick and mortar or concrete bulkheads if approved by the engineer.

PVC conduits for dry utilities, (i.e. communications, fiber, electric) shall be placed using non-metallic PVC casing spacers. The annular space between the casing and carrier line shall be left empty unless otherwise directed. If specified, grout shall be used to fill the annular space when PVC electrical conduits are the carrier line.

After completing the carrier pipe installation, the Contractor shall remove all loose and disturbed material in the bore pits and backfill the pits in accordance with Sections 601 and 336.

602.6 MEASUREMENT AND PAYMENT:

Measurement for steel casing shall be the number of horizontal linear feet from the end of casing in the bore pit to the end of casing in the reception pit. Payment for steel casing shall be full compensation for furnishing all labor, material, tools, and equipment required for the trenchless installation of steel casing, complete in place including but not limited to carrier pipe and bulkhead placement and the excavation and backfilling of pits.

- End of Section -

MEMO

TO: MAG Specs and Details Committee **DATE:** June 5, 2013

FROM: Troy Tobiasson

SUBJECT: Section 610 updates,
Case: 13-20

PURPOSE: To make Section 610 Hydrostatic Test Methods consistent with AWWA C600-10.

REVISIONS:

1. Revised hydrostatic testing to be more consistent with AWWA C600 (2010):
   - Pressure testing: +5 psi max, "stable" pressure, reiterate "minimum" pressure
   - "Leakage" – Changed terms to "testing allowance" and "makeup water", consistent with AWWA C600; changed formula to that found in AWWA C600, and changed "L" to "M" so as to not imply "leakage".
2. Removed references to installation of asbestos-cement pipe and cast iron pipe; suggest addition of installation of PVC (AWWA C900) pipe.
3. Removed references to specific manufacturers, replaced with performance specs (sections 610.6.2 and 610.13(A)).
4. Corrected various grammatical and punctuation errors.

SECTION 610

WATER LINE CONSTRUCTION

610.1 DESCRIPTION:

The construction of all water lines shall conform to applicable standard specifications and details, except as otherwise required on the plans or as modified in the special provisions.

610.2 GENERAL:

All pipes shall be delivered, handled and installed in accordance with the manufacturer's recommendations and/or applicable provisions of AWWA standards for installation of the various types of water mains specified, insofar as such recommendations and provisions are not in variance with the standard specifications and details.

Where water lines are to be constructed in new subdivisions or in conjunction with street repaving projects, the streets shall be pre-graded to within 6 inches of the new street subgrade prior to trenching or cut stakes shall be set for trenching.

610.3 MATERIALS:

All pipes for water lines shall be of the classes shown on the plans or as specified below.

(A) The ~~4 inches through 16 inches~~ (4-inch through 16-inch) diameter pipe may be ~~asbestos cement~~ **PVC C900** or ductile iron, except where a particular material is specified **by the agency or contract documents**. All pipes shall be minimum 150 ~~P.S.I.~~ psi design unless otherwise specified.

(B) Pipe 16 inches and larger may be either ductile iron, or concrete pressure pipe-steel cylinder type.

Ductile iron water pipe and fittings - Section 750. ~~Asbestos cement water pipe and fittings - Section 752~~. Concrete pressure pipe-steel cylinder type - Section 758. **C900 PVC – AWWA C900-07**.

Service Material containing Brass or Bronze must comply with the current NSF 61-8 Standards at the time the Project begins.

All Brass or Bronze service material must meet the current AWWA C-800 Standards.

Any product used in water line construction containing brass or bronze that comes in contact with potable water shall meet the current NSF Standards and Federal Law.

610.4 CONSTRUCTION METHODS:

All water mains in major streets shall have a minimum cover of 48 inches over the top of the pipe. Water mains in other locations shall have a minimum cover over the top of the pipe as follows:

(A) 36 inches for mains smaller than 12 inches.

(B) 48 inches for mains 12 inches and larger.

Cover for water mains will be measured from existing or proposed finished grade of pavement or from natural ground, whichever is deeper.

No water main shall be deflected, either vertically or horizontally, in excess of that recommended by the manufacturer of the pipe or coupling, without the appropriate use of bends or offsets.

If adjustment of the position of a length of pipe is required after it has been laid, it shall be removed and rejoined as for a new pipe.

Every precaution shall be taken to prevent foreign material from entering the pipe. When on the project site, the ends of the pipe section shall be plugged, wrapped or tarped at all times when pipe laying is not in progress, which includes storage and staging at the site. The pipe shall be stored on a pallet, blocking or other means to prevent foreign materials from entering the

pipe. The pipe line shall be protected by a water-tight plug or other means approved by the Engineer when the pipe is in the trench if pipe laying is not in progress.

Where restrained joints are specified on mains sixteen (16) inches in diameter and smaller, ductile iron pipe shall be used with an approved joint restraint method.

On mains sixteen (16) inches in diameter and larger where plans specify welding joints and where ductile iron pipe is furnished, joints shall be restrained by an approved joint restraint method for the distance specified.

Except as otherwise required in this specification, the special provisions, or by the Engineer, trench excavation, backfilling and compaction shall be in accordance with the requirements of Section 601. Backfilling may be accomplished as soon as the pipe line has been installed to the satisfaction of the Engineer, subject to the requirements for testing, as contained below.

Hydrostatic testing shall be in accordance with this specification.

All corporation stops used for testing and chlorination shall be left in the pipe line with the stop closed and all connecting pipe removed.

Curb stops with flushing pipes or fire hydrants shall be installed at the ends of dead-end mains according to standard details. Thrust blocks shall be installed in accordance with this specification.

Valve boxes and covers shall be according to standard details.

~~Asbestos cement pipe shall be installed in accordance with AWWA C 603, except pipe and fittings shall be in accordance with Section 752.~~

~~Cast iron pipe shall be installed in accordance with AWWA C 600, except pipe and fittings shall be in accordance with Section 750.~~

Ductile iron pipe shall be installed in accordance with this specification and pipe and fittings shall be in accordance with Section 750.

PVC C-900 pipe shall be installed in accordance with AWWA C900 and Section 601.

610.5 SEPARATION:

610.5.1 General: Water lines and sewer lines shall be separated to protect water lines from contamination by sewer lines.

The angle of a water line and sewer line crossing shall be limited to between (45) forty-five degrees and (90) ninety degrees. Intersection angles of less than (45) forty-five degrees shall not be allowed.

Separation distances are measured from the outside diameter of the water or sewer line, or the centerline of a manhole.

When water and sewer lines cannot meet separation requirements, extra protection is required as described in Subsection 610.5.5 and shown in Standard Details 404-1, 404-2 and 404-3.

Extra protection requirements for line crossings are measured from the closest outside surfaces of the sewer and water line.

Water line service connections to individual building supply and distribution plumbing shall not be placed below sewer lines, and shall otherwise comply with the separation requirements of the applicable plumbing code as applied by the Agency (Administrative Authority). Methods described for extra protection do not apply to these service lines.

Water and sewer lines shall not be constructed parallel within a common trench.

610.5.2 Water Line Separation from Gravity Sewer Lines: Water lines shall not be placed within two (2) feet horizontal and one (1) foot vertical above and two (2) feet vertical below gravity sewer lines.

Extra protection is required where a water line is placed within six (6) feet horizontal and two (2) feet vertical above a gravity sewer line.

Extra protection is required where a water line is placed within six (6) feet horizontal and any distance below a gravity sewer line.

610.5.3 Water Line Separation from Pressurized Sewer Lines: Water lines shall not be placed within six (6) feet horizontal and within two (2) feet vertical below or within two (2) vertical above a pressurized sewer line.

Extra protection is required where a water line is placed within six (6) feet horizontal and within six (6) feet vertical above a pressurized sewer line.

Extra protection is required where a water line is placed within (6) feet horizontal and any distance below a pressurized sewer line.

610.5.4 Water Line Separation from Manholes: Water lines shall not pass through or come into contact with any part of a sewer manhole and shall be separated six (6) feet horizontal from the center of a sewer manhole.

610.5.5 Extra Protection: New water lines that require extra protection from new sewer lines, shall have extra protection provided by using ductile iron pipe for both lines. Lines of standard pipe length shall be centered at the point of crossing so that no joints exist within six (feet) horizontal and only restrained or mechanical joints exist within ten (10) feet horizontal.

New water lines that require extra protection from sewer lines~~,~~ shall have identification wrap and/or tape installed on the water and sewer lines for the length that requires extra protection for each line.

New water lines that require extra protection from existing sewer lines shall be constructed using the extra protection specified for new water lines, and the existing sewer line:

(1) shall be reconstructed using a standard length of ductile iron pipe centered at the point of crossing so that no joints exist within six (feet) horizontal and only restrained or mechanical joints exist within ten (10) feet horizontal, or

(1) shall be encased in 6 inches of concrete for the horizontal distance of the line that requires extra protection but for a distance no less than ten (10) feet horizontal.

Existing water lines that require extra protection from new sewer lines shall provide for extra protection by:

(1) constructing the new sewer line and reconstructing the existing water line using ductile iron pipe for both lines with standard pipe lengths centered at the point of crossing so that no joints exist within six (feet) horizontal and restrained or mechanical joints exist within ten (10) feet horizontal, or

(2) encasement of both the existing water line and the new sewer line in six (6) inches of concrete for the horizontal distance of the lines that require extra protection but for a distance no less than ten (10) feet horizontal.

(3) Extra protection for existing ductile iron water lines can be met by the installation of restrained or mechanical joints on the existing water line within **ten** (10) feet horizontal of the crossing and either

(a) construction of new sewer line using a standard pipe length of ductile iron pipe centered at the point of crossing so that no joints exist within ~~six (feet)~~ six (6) feet horizontal and restrained or mechanical joints exist within ten (10) feet horizontal, or

(b) encasement of the new sewer line in 6 inches of concrete for the horizontal distance of the line that requires extra protection but for a distance no less than ten (10) feet horizontal.

610.6 POLYETHYLENE CORROSION PROTECTION

610.6.1 General: Where called for in the plans and specifications or directed by the Engineer, pipe, valves and fittings shall be protected from corrosion by encasement in a polyethylene protective wrapping referred to hereafter as polywrap. Although not intended to be a completely air and water tight enclosure the polywrap shall provide a continuous barrier between the pipe and surrounding bedding and backfill.

610.6.2 Materials: The polywrap shall be of virgin polyethylene, not less than 8 *mils* in thickness, formed into tubes or sheets as may be required. Naturally pigmented material may be used where exposure to ~~ultra violet~~ ultraviolet light will be less than 48 hours. Otherwise the material shall be pigmented with 2 to 2 ½ percent of well dispersed carbon black with stabilizers.

The polywrap shall be secured as specified below with ~~2 inches~~ 2-inch wide pressure sensitive ~~plastic~~ tape not less than 10 mils thick. ~~Tape shall be Scotchrap No. 50, Polyken No. 900, Tapecoat CT, Johns Manville No. V-10 Trantex, or approved equal~~. **This flexible tape shall consist of a polyethylene or polyvinyl chloride backing with a synthetic elastomeric adhesive film comprised of butyl rubber. Tape shall remain flexible over a wide range of temperatures, with tensile strength and elongation properties in conformance with ASTM D-1000.**

The minimum tube size for each pipe diameter shall be per Table 610-1.

TABLE 610-1
POLYWRAP FLAT TUBE WIDTHS

Nominal Pipe Diameter (Inches)	Cast Iron Or Ductile Iron With Push-On Joints (inches)	Cast Iron or Ductile Iron With Mechanical Joints (inches)
4	14	16
6	17	20
8	21	24
10	25	27
12	29	30
14	33	34
16	37	37
18	41	41
20	45	45
24	53	53

610.6.3 Installation: The polyethylene tubing shall be cut into lengths approximately 2 feet longer than the pipe sections. With the pipe suspended from the center the tube shall be slipped over the spigot end and bunched up between the point of support and the spigot end. After the pipe is installed into the bell of the adjacent pipe the pipe shall be lowered to the trench bottom and the supporting sling removed from the center of the pipe. The pipe shall then be raised at the bell end enough to allow the tube to be slipped along the full length of the barrel with enough left at each end to overlap the adjoining pipe about 1 foot. A shallow bell hole must be made at each joint to facilitate installation of the polywrap.

Pull the bunched-up polywrap from the preceding length of pipe, slip it over the end of the new length of pipe, and secure in place with one circumferential turn of tape plus enough overlap to assure firm adhesion. Then slip the end of the polywrap from the new pipe section over the end of the first wrap until it overlaps the joint at the end of the preceding length of pipe. Tape it in place.

The loose wrapping on the barrel of the pipe shall be pulled snugly around the barrel of the pipe, and excess material folded over the top of the pipe and the folds held in place by means of short strips of adhesive tape, at about 3 foot intervals along the pipe.

Repair any rips, punctures or other damage to the tube with the adhesive tape or pieces of tube material secured with tape.

Bends and reducers in the line shall be covered with polyethylene in the same manner as pipe.

Valves, tees, crosses and outlets shall be wrapped with flat sheets of the same material. The sheets shall be passed under valves and brought up around the body to the stem. Edges shall be brought together, folded twice and secured with the

adhesive tape.

610.6.4 Payment: Payment for this item shall be per the provisions of Subsections 109.4 and 109.5 of the specifications unless this item is specifically called for on the plans or in the supplemental specifications or special provisions as a specific component and pay item for a given project.

610.7 VALVES:

Valves shall be installed in accordance with AWWA C-600 or AWWA C-603 modified as follows:

All tapping sleeves, gate valves, butterfly valves, air release and vacuum valves and corporation stops shall be in accordance with Section 630.

Just before installation in the trench, valves shall be fully opened and closed to check the action, and a record made of the number of turns required to fully open or close the valve. For valves 16 inches and larger, a member of the water utility shall be present to check the action and record the number of turns. The inside of all valves shall then be thoroughly cleaned and the valve installed.

Valves 12 inches and smaller in size shall be supported by concrete blocks, in accordance with the standard details.

Valves 16 inches and larger in size along with their bypass valves, shall be supported on concrete slabs, and/or concrete piers, as indicated on the plans.

Concrete supports shall be provided under valves in vaults and manholes, and shall be constructed an inch low, then grouted with non-shrink grout. Adjustable pipe supports shall be as indicated on the plans. Buried valves shall be supported on concrete blocks as detailed on the plans.

Valve boxes shall be installed over all buried valves in accordance with standard details.

Standard couplings or matching joints shall be used when more than one length of pipe is required, or when two or more pieces are joined, to form the valve box riser. Install extension stems on all valves where the operating nut is 5 feet or more below grade.

610.8 MANHOLES AND VAULTS:

Construction shall consist of furnishing all materials and constructing manholes or vaults complete in place, as detailed, including foundation walls, cast iron steps, frames, covers, and any incidentals thereto, at location shown on the plans.

Manholes shall be constructed to conform with the requirements of Section 625 and standard details, except the inside diameter shall be 60 inches.

Vaults shall be constructed of reinforced concrete conforming to Section 725 and of concrete pipe conforming to ASTM C76 Wall A or B. Vaults shall be kept moist for 7 days before backfilling.

610.9 FIRE HYDRANTS:

The Contractor shall furnish all labor, materials, and equipment necessary to install fire hydrants complete in place at locations shown on the plans in accordance with the standard details and special provisions. Fire hydrants furnished by the Contractor shall conform to the requirements of Section 756.

If paint is chipped, scuffed, or otherwise damaged during handling and installation, the Contractor shall touch up such spots as may be designated by the Engineer.

All hydrants must be flushed and left in good working condition with the control valve open.

610.10 CONNECTION TO EXISTING MAINS:

Existing pipe to which connections are to be made shall be exposed by the Contractor as directed by the Engineer, to permit field changes in line, grade or fittings, if necessary.

All connections to existing mains shall be constructed according to the plans.

Valves connecting new work to the existing system shall be kept closed at all times.

Only Agency personnel shall operate existing valves. The Contractor shall not operate valves in the existing system.

After disinfected samples have been taken and the new work passes the bacteriological tests, the new line shall then be turned over to the Contracting Agency with all branch lines and tie-in valves closed.

When shutdown of an existing water main is necessary in order to connect to the new lines, the Contractor shall make application and pay the required charges to the Contracting Agency. A conference between the Contractor's representative, Engineering Inspection, and Water Distribution personnel shall establish the time and procedures to insure that the shutdown will be for the shortest possible time. If necessary to minimize inconvenience to customers, shutdowns may be scheduled during other than normal working hours. The water supply to some customers, such as hospitals, cannot be shut off at any time. Provisions to furnish a continuous supply of water to such establishments will be required. After the procedures and time for a shutdown are agreed upon, it shall be the Contractor's responsibility to notify all customers in advance that the water will be turned off. When possible, customers shall be notified 24 hours in advance and in no case, except in emergency, shall notification be less than 30 minutes. Notification shall be in writing, giving the reason for the shutdown and the time and duration the water service will be shut off.

The Contracting Agency will close existing valves, but will not guarantee a bone-dry shutdown.

610.11 METER SERVICE CONNECTIONS:

All new meters must be installed by the Contracting Agency after the proper application as required by Code with fees paid at prevailing rates.

When plans call for connections from a new water main to an existing water meter, the work shall include new copper pipe and fittings except as follows:

(A) Wrapped galvanized pipe shall be used to connect or extend existing galvanized service pipe. Type K soft copper pipe or tubing shall be used to connect or extend existing copper service pipe except when otherwise called for in the plans.

(B) When the existing main is not abandoned, and the existing meter is to be connected to the new line, the corporation stop at the old main shall be closed and the abandoned service line cut 6 inches from the old main.

(C) Taps and service connections to the new main shall be made prior to testing and disinfection of the new line.

(D) Meter service piping may be installed by drilling in place of open cut construction when approved by the Engineer.
When called for on the plans, the meter and box shall be relocated by the Contractor as directed by the Engineer. Existing meters which are shown on the plans to be relocated shall be located and installed in accordance with standard details.

Water meter boxes which are broken during construction shall be replaced by the Contractor at no additional cost to the Contracting Agency. Existing meter boxes which are already broken prior to start of construction shall be replaced by the Contractor with boxes furnished by the Contracting Agency. Boxes may be picked up by the Contractor after written authorization is received from the Engineer. The written authorization shall include the street address of each broken meter box and the size of meter box required. All water meter boxes shall conform to the standard details.

610.12 FIRE LINE SERVICE CONNECTIONS:

Fire line service connections shall be installed in accordance with standard details.

The fire line from the control valves at the main to the detector check valve shall be constructed of ~~cast iron or~~ ductile iron pipe to Section 750.

SECTION 610

610.13 COUPLINGS, JOINTS, GASKETS AND FLANGES:

(A) Couplings: The couplings used to join the pipe to flanged valve adapters shall ~~be Dresser Style 38, Smith Blair 411 or an approved equal~~ **have a minimum working pressure of 150 psi, and shall have a fusion-bonded epoxy finish. The coupling sleeves shall be carbon steel with a minimum yield of 30.000 psi. The flanges shall have a minimum yield of 30,000 psi and be ductile iron or carbon steel for sizes up to 12", or high-stregnth, low-alloy steel for sizes 14" and larger.**

(B) Joints: The joints and fitting shall conform to Sections 750 and 752.

(C) Bolts and Nuts:

(1) Bolts, studs, and nuts used in underground field flanged connections or for connecting fittings shall be carbon steel compliant with ASTM A307, Grade A unless Grade B is specified. Bolts, studs, and nuts shall be in accordance with AWWA C111. Bolts and studs shall have Class 2A thread tolerance with the corresponding nuts having Class 2B tolerance. Bolts, studs and nuts shall have a hot-dipped zinc coating in accordance with ASTM F2329. All bolt diameters shall normally be 1/8 inch smaller than the bolt hole diameter. If specified, allowable exceptions to zinc coating shall be bolts, studs, and nuts made from 316 stainless steel per ASTM F593 or cadmium plated per ASTM B766. All bolts shall be hexagonal heads.

(2) The minimum requirement for underground mechanical joint connections using T-head bolts shall meet the requirements of AWWA C111 using a high strength low alloy steel manufactured for atmospheric corrosion resistance per ASTM A242.

These bolted joints shall be protected as follows: Following installation and before backfilling, all couplings, steel flanges, bolts, nuts, anchor bolts and rods, bolting of all flanged valves, and all exposed steel shall be protected from corrosion by either of the two methods outlined below at the Contractor's option.

(A) Below ground installations shall be coated with NO-OX-ID "A" with a film of not less than 1/32 inch thick and then coated with cement mortar not less than 1 inch thickness before backfilling. Cement mortar shall be composed of 1 part cement, ASTM C150, Type II, low alkali, to 3 parts sand. Before application of the cement mortar coating the area to be protected shall be covered with a layer of 2 x 2 inch No. 14 gage welded wire fabric, firmly wired in place.

(B) Below ground installations shall be protected by the application of hot coal-tar enamel. The coal-tar enamel shall be in accordance with AWWA C-203 and shall be applied to the top part of the pipe or fittings by daubers for at least 2 coats for a total minimum thickness of 1/16 inch. The coal-tar for under side of the pipe flanges or fittings shall be applied by the pan or cocoon method as described below and in AWWA Manual M-11, Steel Pipe.

Pan Method: The coating pan is securely anchored in place on the underside of the pipe and straddling the connection to be coated. The pan shall be wide enough so that the entire connection will be coated.

Hot coal-tar enamel is poured into the pan, from one side only, until the pan is completely filled. The drain plug or valve is then opened and the excess coal-tar drained out. The pan can then be removed. Details of the coating pan and corresponding dimensions are given in AWWA Manual M-11.

The upper portion of the connection, and all remaining exposed steel pipe, will then be coated by the use of a dauber. The coal-tar coating shall be applied in at least 2 coats for a minimum thickness of 1/16 inch. The daubers and method of application **shall** conform to AWWA C-203. No thinning will be allowed.

(C) Cocoon Method: The cocoon is formed by placing glass fiber cloth or roofing paper, of the proper width, around the underside of the connection and adjacent exposed steel pipe. The edges of the cocoon shall be securely fastened to the pipe. Backfill is lightly placed to the spring line, and the top of the cocoon is opened and layed back on the filled area and hot coal-tar enamel poured, from one side only, until the cocoon is completely filled. The loose backfill prevents rupture of the cocoon. The upper portion of the connection and remaining exposed steel pipe shall be coated as above.

(D) Gaskets: Except as otherwise provided, all gaskets for pipe lines shall be one piece full faced gaskets from one-ply cloth inserted SBR rubber material. Gaskets for flanges 20 inches and smaller shall be from 1/16 inch thick material. Gaskets for flanges 24 inches and larger shall be from 1/8 inch thick material. Gasket material shall be J-M 109 as manufactured by

Johns-Manville Corporation or an approved equal. Physical characteristics of the rubber compound shall meet ASTM D2000, Class 4AA805A13.

(E) Flanges: Cast iron flanges shall conform to AWWA C-110 as to material, diameter, thickness, drilling, etc. Steel flanges shall be ring or hub type, and shall conform to AWWA C-207, Class D. All flanges shall be drilled and have flange diameters and bolt circles conforming to AWWA C-110, except bolt holes will be 1/8 inch larger than the bolts given for the various sizes. All bolts shall be as specified above and all flanges shall have a flat facing.

610.14 BLOCKING:

All pipe lines, valves and fittings 16 inches and smaller in diameter shall be blocked with concrete thrust blocks in accordance with standard details. Thrust block areas for pipe, valves and fittings larger than 16 inches in diameter shall be calculated for each size pipe, valve and fitting to be installed and shown on the plans.

Thrust block areas shall be calculated on the basis of 200 psi test pressure bearing against undisturbed 3,000 psf soil.

If soil or pressure conditions other than those stated above are encountered, the thrust block areas shall be calculated and submitted for approval. The areas stipulated in the standard details are minimum**s** and shall not be decreased.

When restrained/welded joints are specified to resist thrust forces, blocking is not required.

With the Engineers approval, restrained/welded joints may be used in lieu of thrust blocks to resist thrust forces.

610.15 HYDROSTATIC TESTING:

Water lines, including all fittings and connections to the water mains shall be tested for watertightness by subjecting each section to hydrostatic ~~tests~~ **testing** in accordance with applicable provisions ~~or~~ **of** AWWA C-600, except as modified below, and shall consist of pressure ~~test~~ **testing** and ~~leakage tests~~ **allowance testing**.

The test section shall be slowly filled with potable water and all air shall be vented from the line. The rate of filling shall be as determined by the Superintendent of Water Distribution, with at least 24-hour notice required before tests are scheduled *(moved from original 610.15(A) below).*

The Contractor shall provide all vents, piping, plugs, bulkheads, valves, bracing, blocking, pump**s**, **and** ~~including~~ measuring device**s** and all other equipment **(**~~except~~ **such as** pressure gages**)** ~~such as~~ **which may be** necessary for making the tests, and shall pay the Contracting Agency for water used in the tests.

~~Pressure Tests:~~ **Hydrostatic Testing:** ~~The test~~ **Pressure testing** may be made before or after backfilling, **but backfilling must be completed before allowance testing. If the pipe is center-loaded,** a visual inspection for leaks may be made along the pipe line while the test section is under test pressure, and all visible leaks repaired. However, if mechanical compaction is to be used in the backfilling operations as spelled out in AWWA C-600, the tests shall not be made until the backfilling is completed and compacted. *(moved from original 610.15(A) below).*Backfill and compaction for the full distance encompassed by restrained welded joints shall be completed prior to testing. *(moved from 610.15(B) below).* All connections, blowoffs, hydrants and valves shall be tested with the main as far as is practicable. Hydrostatic testing shall not begin until the pipe has been filled with water for at least 24 hours to allow for ~~absorption~~ **air venting.** *(moved from original 610.15(A) below).*

(A) Pressure ~~Tests~~ **Testing**: Unless otherwise noted **in the contract documents,** the **minimum prescribed** test pressure shall be at least 200 psi for lines smaller than 16 inches and 150 psi for lines 16 inches or larger, **not to exceed 5 psi over the minimum prescribed test pressure**, as measured at the lowest end of the section under test *(moved from 610.15(B) below).* The duration of each pressure test shall be at least 2 hours, **during which time the test section shall not drop below the minimum prescribed test pressure. If the pressure in the pipe test section has not stabilized by the end of the testing period, a hydrostatic retest will be required.**

Each section of a new line between sectionalizing valves or between the last sectionalizing valve and the end of the project shall be tested separately as required in AWWA C-600, and/or as modified in these specifications, except that any such section less than 500 feet in length may be tested with the adjacent section, if both sections of line have the same pipe class rating. No section greater than ~~½~~ 1/2 mile in total pipe length shall be tested without special written permission of the Engineer.

(B) ~~Leakage Tests~~ **Testing Allowance/Makeup Water:** ~~Leakage tests shall be made~~ **Makeup water volume shall be determined** after the pressure test has been satisfactorily completed and all backfilling and compaction ~~is~~ **has been** completed to top of trench. ~~Leakage is defined as the quantity of water~~ **Testing Allowance shall be defined as the maximum quantity of makeup water** necessary to be supplied into the pipe line section under test to ~~maintain~~ **restore** the ~~specified leakage~~ **ending** test pressure **to the beginning test pressure**, after the pipe line has been filled with water and all air expelled. The Contractor shall furnish the necessary apparatus and assistance to conduct the test.

The duration of each makeup water test shall be at least 2 hours. To pass the allowance testing, the quantity of makeup water from the pipe line shall not exceed the makeup water quantity allowed by the following formula, from AWWA C-600:

$$\cancel{L = \frac{ND\sqrt{P}}{4500}}$$

in which

~~L = allowable leakage~~ in gallon per hour.

~~N = number of joints in the pipe line being tested, this "N" being the standard length of pipe furnished divided into the length being tested, with no allowance for joints at branches, blowoff, fittings, etc.~~

D = nominal diameter of pipe in inches.

~~P = average observed test pressure of the pipe being tested, equal to at least 100 percent of the class rating of pipe being tested, in psi gage, based on the elevation of the lowest point in the line or section under test and corrected to the elevation of the test gage.~~

P = test pressure of the pipe being tested, per 610.15 (A)

$$\mathbf{M = \frac{SD\sqrt{P}}{148{,}000}}$$

Taken from AWWA C600 (2011) (Eq 1), in which:

M = Testing Allowance (makeup water), in gallons per hour.

S = length of pipe tested, in feet

D = nominal diameter of pipe, in inches.

P = average observed test pressure of the pipe being tested, equal to at least 100 percent of the class rating of pipe being tested, in psi gage, based on the elevation of the lowest point in the line or section under test and corrected to the elevation of the test gage.

Should the test on any section of the pipe line ~~show leakage greater than specified above~~ **require more makeup water than allowed by the above formula**, the Contractor shall locate and repair the defective pipe, fittings, or joint until ~~the leakage is~~

~~within the specified allowance of 2 hour duration~~ **the makeup water volume is within the specified allowance**. All repairs and retests, if required, shall be made at the Contractor's expense.

Connections to the existing pipelines or existing valves shall not be made until after that section of new construction has satisfactorily passed the hydrostatic tests.

~~Cast iron and~~ ~~ductile~~ Ductile **iron** pipe used in conjunction with ACP will be tested to the ACP standards, unless otherwise directed by the Engineer. High pressure systems of all ~~cast iron or~~ ~~Ductile~~ ductile iron **pipe** will be tested in accordance with AWWA C-600, Section 4.1.

610.16 DISINFECTING WATER LINES:

After pressure testing and before placing in service, all water lines shall be disinfected. Disinfection shall be accomplished in accordance with Section 611. All valves in the lines being disinfected shall be opened and closed several times during the 24 hour period of disinfection.

610.17 PAVEMENT AND SURFACING REPLACEMENT:

Pavement and surfacing replacement shall be in accordance with the requirements of Section 336.

610.18 CLEANUP:

When testing, chlorination, compaction, and cleanup do not follow pipe laying in an orderly manner, the Engineer reserves the right to close down trenching and pipe laying until these operations are adequately advanced.

610.19 MEASUREMENT AND PAYMENT:

(A) Pipe:

(1) Measurement of all pipe shall be of the linear feet of pipe installed, measured along the centerline of the pipe, through all valves and fittings, from the centerline of the fittings or centerline of valves on ends of pipe to the centerline of fittings, centerline of valves on ends of pipe or to the end of pipe, as the case may be, for all through runs of pipe. Measurement shall be to the nearest 0.1 foot.

Measurement of branch line pipe shall start at the centerline of valve at connection to the main. Branches of tees that are valued and capped will not be measured.

Measurement of meter service pipe shall be from the centerline of the new main to the connection at the meter, along the centerline of service pipe.

(2) Payment will be made at the unit price bid per linear foot of each type and size of pipe called for in the proposal. Such payment shall be compensation in full for furnishing and installing the pipe and fittings, specials, adapters, etc., complete in place, as called for on the plans and/or on the standard details, and shall include all costs of excavation, removal of obstructions, shoring and bracing, bedding, backfilling, compaction, maintenance of traffic, testing, disinfecting, connections to existing lines or works, and all work not specifically covered in other pay items.

A contingent item ~~forecast iron~~ for fittings not shown on the plans shall be included in the proposal. Payment will be made at the unit price bid per pound on the theoretical weight of the fittings installed, which shall be compensation in full for furnishing and installing the fittings.

(1) Service Connection To Existing Water Meters: Measurement shall be of the number of unit connections made for water meter services, as called for in the proposal. Each proposal item unit shall consist of the connection to the water main and to the meter, as required in standard details.

(2) Payment will be made at the unit price bid for each unit water meter service connection and shall be compensation in full for labor materials (other than pipe) equipment, tapping, and all necessary incidentals. Payment for new service pipe required to make the connection will be made separately, as stipulated above.

(B) Relocation of Existing Meters and Boxes: Measurement shall be of the number of meters and boxes moved and reinstalled. Payment will be made at the unit price bid in the proposal for each meter and box relocated and installed.

(C) Permanent Pipe Supports and Encasement of Existing Pipes: Measurement shall be of each unit included in the proposal, and payment shall be compensation in full for supporting or encasing existing pipe, as required on the plans, including excavation, form work, reinforcing, concrete, handling and controlling flows in the existing pipe, removing and replacing existing pipe where necessary, supporting, backfilling and compaction, and pavement and/or surfacing replacement required in excess of pay width(s) allowed in Section 336.

(D) Concrete Thrust Blocks: Concrete thrust blocks and anchors for all pipe 16 inches and larger shall be measured by the cubic yard(s) of concrete placed, as required on the plans and/or as directed by the Engineer. Payment will be made at the unit price bid per cubic yard, and shall be compensation in full for excavation, formwork, placing and finishing concrete, reinforcing, backfilling and compaction, and pavement and/or surfacing replacement required in excess of pay width(s) allowed in Section 336. All thrust blocks and anchors for 12 inches and smaller pipe shall be included in the linear foot cost of the pipe.

(E) Valves: Measurement of and payment for valves, tapping sleeves and valves, and valve boxes shall be for each item furnished and installed, as designated in Section 630.

(F) Fire Hydrants: Measurement shall be the number of fire hydrants installed. Payment will be at the unit price bid for the installation of each fire hydrant complete in place and in operating condition. The 6 inches cast iron pipe and fittings, required for making the connection from the main to the hydrant, shall be a separate pay item in the proposal as described above.

(H) Pavement and/or Surfacing Replacement**:** Payment for pavement and/or surfacing replacement will be made as stipulated in Section 336, except as otherwise established in this specification. The cost of pavement and/or surface replacement required for meter service installations shall be included in the price bid for meter service pipe.

- End of Section

SECTION 610

WATER LINE CONSTRUCTION

610.1 DESCRIPTION:

The construction of all water lines shall conform to applicable standard specifications and details, except as otherwise required on the plans or as modified in the special provisions.

610.2 GENERAL:

All pipes shall be delivered, handled and installed in accordance with the manufacturer's recommendations and/or applicable provisions of AWWA standards for installation of the various types of water mains specified, insofar as such recommendations and provisions are not in variance with the standard specifications and details.

Where water lines are to be constructed in new subdivisions or in conjunction with street repaving projects, the streets shall be pre-graded to within 6 inches of the new street subgrade prior to trenching or cut stakes shall be set for trenching.

610.3 MATERIALS:

All pipes for water lines shall be of the classes shown on the plans or as specified below.

(A) The 4-inch through 16-inch diameter pipe sizes may be PVC C900 or ductile iron, except where a particular material is specified by the agency or the contract documents. All pipes shall be minimum 150 psi design unless otherwise specified.

(B) Pipe 16 inches and larger may be either ductile iron, or concrete pressure pipe-steel cylinder type.

Ductile iron water pipe and fittings – Section 750.
Concrete pressure pipe-steel cylinder type – Section 758.
C900 PVC – AWWA C900-07.

Service Material containing Brass or Bronze must comply with the current NSF 61-8 Standards at the time the Project begins.

All Brass or Bronze service material must meet the current AWWA C-800 Standards.

Any product used in water line construction containing brass or bronze that comes in contact with potable water shall meet the current NSF Standards and Federal Law.

610.4 CONSTRUCTION METHODS:

All water mains in major streets shall have a minimum cover of 48 inches over the top of the pipe. Water mains in other locations shall have a minimum cover over the top of the pipe as follows:

(A) 36 inches for mains smaller than 12 inches.

(B) 48 inches for mains 12 inches and larger.

Cover for water mains will be measured from existing or proposed finished grade of pavement or from natural ground, whichever is deeper.

No water main shall be deflected, either vertically or horizontally, in excess of that recommended by the manufacturer of the pipe or coupling, without the appropriate use of bends or offsets.

If adjustment of the position of a length of pipe is required after it has been laid, it shall be removed and rejoined as for a new pipe.

Every precaution shall be taken to prevent foreign material from entering the pipe. When on the project site, the ends of the pipe section shall be plugged, wrapped or tarped at all times when pipe laying is not in progress, which includes storage and staging at the site. The pipe shall be stored on a pallet, blocking or other means to prevent foreign materials from entering the pipe. The pipe line shall be protected by a water-tight plug or other means approved by the Engineer when the pipe is in the trench if pipe laying is not in progress.

Where restrained joints are specified on mains sixteen (16) inches in diameter and smaller, ductile iron pipe shall be used with an approved joint restraint method.

On mains sixteen (16) inches in diameter and larger where plans specify welding joints and where ductile iron pipe is furnished, joints shall be restrained by an approved joint restraint method for the distance specified.

Except as otherwise required in this specification, the special provisions, or by the Engineer, trench excavation, backfilling and compaction shall be in accordance with the requirements of Section 601. Backfilling may be accomplished as soon as the pipe line has been installed to the satisfaction of the Engineer, subject to the requirements for testing, as contained below.

Hydrostatic testing shall be in accordance with this specification.

All corporation stops used for testing and chlorination shall be left in the pipe line with the stop closed and all connecting pipe removed.

Curb stops with flushing pipes or fire hydrants shall be installed at the ends of dead-end mains according to standard details.
Thrust blocks shall be installed in accordance with this specification.

Valve boxes and covers shall be according to standard details.

Ductile iron pipe shall be installed in accordance with this specification and pipe and fittings shall be in accordance with Section 750.

610.5 SEPARATION:

610.5.1 General: Water lines and sewer lines shall be separated to protect water lines from contamination by sewer lines.

The angle of a water line and sewer line crossing shall be limited to between (45) forty-five degrees and (90) ninety degrees. Intersection angles of less than (45) forty-five degrees shall not be allowed.

Separation distances are measured from the outside diameter of the water or sewer line, or the centerline of a manhole.

When water and sewer lines cannot meet separation requirements, extra protection is required as described in Subsection 610.5.5 and shown in Standard Details 404-1, 404-2 and 404-3.

Extra protection requirements for line crossings are measured from the closest outside surfaces of the sewer and water line.

Water line service connections to individual building supply and distribution plumbing shall not be placed below sewer lines, and shall otherwise comply with the separation requirements of the applicable plumbing code as applied by the Agency (Administrative Authority). Methods described for extra protection do not apply to these service lines.

Water and sewer lines shall not be constructed parallel within a common trench.

610.5.2 Water Line Separation from Gravity Sewer Lines: Water lines shall not be placed within two (2) feet horizontal and one (1) foot vertical above and two (2) feet vertical below gravity sewer lines.

Extra protection is required where a water line is placed within six (6) feet horizontal and two (2) feet vertical above a gravity sewer line.

Extra protection is required where a water line is placed within six (6) feet horizontal and any distance below a gravity sewer line.

610.5.3 Water Line Separation from Pressurized Sewer Lines: Water lines shall not be placed within six (6) feet horizontal and within two (2) feet vertical below or within two (2) vertical above a pressurized sewer line.

Extra protection is required where a water line is placed within six (6) feet horizontal and within six (6) feet vertical above a pressurized sewer line.

Extra protection is required where a water line is placed within (6) feet horizontal and any distance below a pressurized sewer line.

610.5.4 Water Line Separation from Manholes: Water lines shall not pass through or come into contact with any part of a sewer manhole and shall be separated six (6) feet horizontal from the center of a sewer manhole.

610.5.5 Extra Protection: New water lines that require extra protection from new sewer lines, shall have extra protection provided by using ductile iron pipe for both lines. Lines of standard pipe length shall be centered at the point of crossing so that no joints exist within six (feet) horizontal and only restrained or mechanical joints exist within ten (10) feet horizontal.

New water lines that require extra protection from sewer lines shall have identification wrap and/or tape installed on the water and sewer lines for the length that requires extra protection for each line.

New water lines that require extra protection from existing sewer lines shall be constructed using the extra protection specified for new water lines, and the existing sewer line:

(1) shall be reconstructed using a standard length of ductile iron pipe centered at the point of crossing so that no joints exist within six (feet) horizontal and only restrained or mechanical joints exist within ten (10) feet horizontal, or

(2) shall be encased in 6 inches of concrete for the horizontal distance of the line that requires extra protection but for a distance no less than ten (10) feet horizontal.

Existing water lines that require extra protection from new sewer lines shall provide for extra protection by:

(1) constructing the new sewer line and reconstructing the existing water line using ductile iron pipe for both lines with standard pipe lengths centered at the point of crossing so that no joints exist within six (feet) horizontal and restrained or mechanical joints exist within ten (10) feet horizontal, or

(2) encasement of both the existing water line and the new sewer line in six (6) inches of concrete for the horizontal distance of the lines that require extra protection but for a distance no less than ten (10) feet horizontal.

(3) Extra protection for existing ductile iron water lines can be met by the installation of restrained or mechanical joints on the existing water line within ten (10) feet horizontal of the crossing and either

(a) construction of new sewer line using a standard pipe length of ductile iron pipe centered at the point of crossing so that no joints exist within six (6) feet horizontal and restrained or mechanical joints exist within ten (10) feet horizontal, or

(b) encasement of the new sewer line in 6 inches of concrete for the horizontal distance of the line that requires extra protection but for a distance no less than ten (10) feet horizontal.

610.6 POLYETHYLENE CORROSION PROTECTION

610.6.1 General: Where called for in the plans and specifications or directed by the Engineer, pipe, valves and fittings shall be protected from corrosion by encasement in a polyethylene protective wrapping referred to hereafter as polywrap. Although not intended to be a completely air and water tight enclosure the polywrap shall provide a continuous barrier between the pipe and surrounding bedding and backfill.

610.6.2 Materials: The polywrap shall be of virgin polyethylene, not less than 8 *mils* in thickness, formed into tubes or sheets as may be required. Naturally pigmented material may be used where exposure to ultra-violet light will be less than 48 hours. Otherwise the material shall be pigmented with 2 to 2 ½ percent of well dispersed carbon black with stabilizers.

The polywrap shall be secured as specified below with 2-inch wide pressure sensitive tape not less than 10 mils thick. This flexible tape shall consist of a polyethylene or polyvinyl chloride backing with a synthetic elastomeric adhesive film comprised of butyl rubber. Tape shall remain flexible over a wide range of temperatures, with tensile strength and elongation properties in conformance with ASTM D-1000.

The minimum tube size for each pipe diameter shall be per Table 610-1.

TABLE 610-1
POLYWRAP FLAT TUBE WIDTHS

Nominal Pipe Diameter (Inches)	Cast Iron Or Ductile Iron With Push-On Joints (inches)	Cast Iron or Ductile Iron With Mechanical Joints (inches)
4	14	16
6	17	20
8	21	24
10	25	27
12	29	30
14	33	34
16	37	37
18	41	41
20	45	45
24	53	53

610.6.3 Installation: The polyethylene tubing shall be cut into lengths approximately 2 feet longer than the pipe sections. With the pipe suspended from the center the tube shall be slipped over the spigot end and bunched up between the point of support and the spigot end. After the pipe is installed into the bell of the adjacent pipe the pipe shall be lowered to the trench bottom and the supporting sling removed from the center of the pipe. The pipe shall then be raised at the bell end enough to allow the tube to be slipped along the full length of the barrel with enough left at each end to overlap the adjoining pipe about 1 foot. A shallow bell hole must be made at each joint to facilitate installation of the polywrap.

Pull the bunched-up polywrap from the preceding length of pipe, slip it over the end of the new length of pipe, and secure in place with one circumferential turn of tape plus enough overlap to assure firm adhesion. Then slip the end of the polywrap from the new pipe section over the end of the first wrap until it overlaps the joint at the end of the preceding length of pipe. Tape it in place.

The loose wrapping on the barrel of the pipe shall be pulled snugly around the barrel of the pipe, and excess material folded over the top of the pipe and the folds held in place by means of short strips of adhesive tape, at about 3 foot intervals along the pipe.

Repair any rips, punctures or other damage to the tube with the adhesive tape or pieces of tube material secured with tape.

Bends and reducers in the line shall be covered with polyethylene in the same manner as pipe.

Valves, tees, crosses and outlets shall be wrapped with flat sheets of the same material. The sheets shall be passed

under valves and brought up around the body to the stem. Edges shall be brought together, folded twice and secured with the adhesive tape.

610.6.4 Payment: Payment for this item shall be per the provisions of Subsections 109.4 and 109.5 of the specifications unless this item is specifically called for on the plans or in the supplemental specifications or special provisions as a specific component and pay item for a given project.

610.7 VALVES:

Valves shall be installed in accordance with AWWA C-600 or AWWA C-603 modified as follows:

All tapping sleeves, gate valves, butterfly valves, air release and vacuum valves and corporation stops shall be in accordance with Section 630.

Just before installation in the trench, valves shall be fully opened and closed to check the action, and a record made of the number of turns required to fully open or close the valve. For valves 16 inches and larger, a member of the water utility shall be present to check the action and record the number of turns. The inside of all valves shall then be thoroughly cleaned and the valve installed.

Valves 12 inches and smaller in size shall be supported by concrete blocks, in accordance with the standard details.

Valves 16 inches and larger in size along with their bypass valves, shall be supported on concrete slabs, and/or concrete piers, as indicated on the plans.

Concrete supports shall be provided under valves in vaults and manholes, and shall be constructed an inch low, then grouted with non-shrink grout. Adjustable pipe supports shall be as indicated on the plans. Buried valves shall be supported on concrete blocks as detailed on the plans.

Valve boxes shall be installed over all buried valves in accordance with standard details.

Standard couplings or matching joints shall be used when more than one length of pipe is required, or when two or more pieces are joined, to form the valve box riser. Install extension stems on all valves where the operating nut is 5 feet or more below grade.

610.8 MANHOLES AND VAULTS:

Construction shall consist of furnishing all materials and constructing manholes or vaults complete in place, as detailed, including foundation walls, cast iron steps, frames, covers, and any incidentals thereto, at location shown on the plans.

Manholes shall be constructed to conform with the requirements of Section 625 and standard details, except the inside diameter shall be 60 inches.

Vaults shall be constructed of reinforced concrete conforming to Section 725 and of concrete pipe conforming to ASTM C76 Wall A or B. Vaults shall be kept moist for 7 days before backfilling.

610.9 FIRE HYDRANTS:

The Contractor shall furnish all labor, materials, and equipment necessary to install fire hydrants complete in place at locations shown on the plans in accordance with the standard details and special provisions. Fire hydrants furnished by the Contractor shall conform to the requirements of Section 756.

If paint is chipped, scuffed, or otherwise damaged during handling and installation, the Contractor shall touch up such spots as may be designated by the Engineer.

All hydrants must be flushed and left in good working condition with the control valve open.

610.10 CONNECTION TO EXISTING MAINS:

Existing pipe to which connections are to be made shall be exposed by the Contractor as directed by the Engineer, to permit field changes in line, grade or fittings, if necessary.

All connections to existing mains shall be constructed according to the plans.

Valves connecting new work to the existing system shall be kept closed at all times.

Only Agency personnel shall operate existing valves. The Contractor shall not operate valves in the existing system.

After disinfected samples have been taken and the new work passes the bacteriological tests, the new line shall then be turned over to the Contracting Agency with all branch lines and tie-in valves closed.

When shutdown of an existing water main is necessary in order to connect to the new lines, the Contractor shall make application and pay the required charges to the Contracting Agency. A conference between the Contractor's representative, Engineering Inspection, and Water Distribution personnel shall establish the time and procedures to insure that the shutdown will be for the shortest possible time. If necessary to minimize inconvenience to customers, shutdowns may be scheduled during other than normal working hours. The water supply to some customers, such as hospitals, cannot be shut off at any time. Provisions to furnish a continuous supply of water to such establishments will be required. After the procedures and time for a shutdown are agreed upon, it shall be the Contractor's responsibility to notify all customers in advance that the water will be turned off. When possible, customers shall be notified 24 hours in advance and in no case, except in emergency, shall notification be less than 30 minutes. Notification shall be in writing, giving the reason for the shutdown and the time and duration the water service will be shut off.

The Contracting Agency will close existing valves, but will not guarantee a bone-dry shutdown.

610.11 METER SERVICE CONNECTIONS:

All new meters must be installed by the Contracting Agency after the proper application as required by Code with fees paid at prevailing rates.

When plans call for connections from a new water main to an existing water meter, the work shall include new copper pipe and fittings except as follows:

(A) Wrapped galvanized pipe shall be used to connect or extend existing galvanized service pipe. Type K soft copper pipe or tubing shall be used to connect or extend existing copper service pipe except when otherwise called for in the plans.

(B) When the existing main is not abandoned, and the existing meter is to be connected to the new line, the corporation stop at the old main shall be closed and the abandoned service line cut 6 inches from the old main.

(C) Taps and service connections to the new main shall be made prior to testing and disinfection of the new line.

(D) Meter service piping may be installed by drilling in place of open cut construction when approved by the Engineer.

When called for on the plans, the meter and box shall be relocated by the Contractor as directed by the Engineer. Existing meters which are shown on the plans to be relocated shall be located and installed in accordance with standard details.

Water meter boxes which are broken during construction shall be replaced by the Contractor at no additional cost to the Contracting Agency. Existing meter boxes which are already broken prior to start of construction shall be replaced by the Contractor with boxes furnished by the Contracting Agency. Boxes may be picked up by the

Contractor after written authorization is received from the Engineer. The written authorization shall include the street address of each broken meter box and the size of meter box required. All water meter boxes shall conform to the standard details.

610.12 FIRE LINE SERVICE CONNECTIONS:

Fire line service connections shall be installed in accordance with standard details.

The fire line from the control valves at the main to the detector check valve shall be constructed of ductile iron pipe to Section 750.

610.13 COUPLINGS, JOINTS, GASKETS AND FLANGES:

(A) Couplings: The couplings used to join the pipe to flanged valve adapters shall have a minimum working pressure of 150 psi, and shall have a fusion-bonded epoxy finish. The coupling sleeves shall be carbon steel with a minimum yield of 30.000 psi. The flanges shall have a minimum yield of 30,000 psi and be ductile iron or carbon steel for sizes up to 12", or high-strength, low-alloy steel for sizes 14" and larger.

(B) Joints: The joints and fitting shall conform to Sections 750 and 752.

(C) Bolts and Nuts:

(1) Bolts, studs, and nuts used in underground field flanged connections or for connecting fittings shall be carbon steel compliant with ASTM A307, Grade A unless Grade B is specified. Bolts, studs, and nuts shall be in accordance with AWWA C111. Bolts and studs shall have Class 2A thread tolerance with the corresponding nuts having Class 2B tolerance. Bolts, studs and nuts shall have a hot-dipped zinc coating in accordance with ASTM F2329. All bolt diameters shall normally be 1/8 inch smaller than the bolt hole diameter. If specified, allowable exceptions to zinc coating shall be bolts, studs, and nuts made from 316 stainless steel per ASTM F593 or cadmium plated per ASTM B766. All bolts shall be hexagonal heads.

(2) The minimum requirement for underground mechanical joint connections using T-head bolts shall meet the requirements of AWWA C111 using a high strength low alloy steel manufactured for atmospheric corrosion resistance per ASTM A242.

These bolted joints shall be protected as follows: Following installation and before backfilling, all couplings, steel flanges, bolts, nuts, anchor bolts and rods, bolting of all flanged valves, and all exposed steel shall be protected from corrosion by either of the two methods outlined below at the Contractor's option.

(A) Below ground installations shall be coated with NO-OX-ID "A" with a film of not less than 1/32 inch thick and then coated with cement mortar not less than 1 inch thickness before backfilling. Cement mortar shall be composed of 1 part cement, ASTM C150, Type II, low alkali, to 3 parts sand. Before application of the cement mortar coating the area to be protected shall be covered with a layer of 2 x 2 inch No. 14 gage welded wire fabric, firmly wired in place.

(B) Below ground installations shall be protected by the application of hot coal-tar enamel. The coal-tar enamel shall be in accordance with AWWA C-203 and shall be applied to the top part of the pipe or fittings by daubers for at least 2 coats for a total minimum thickness of 1/16 inch. The coal-tar for under side of the pipe flanges or fittings shall be applied by the pan or cocoon method as described below and in AWWA Manual M-11, Steel Pipe.

Pan Method: The coating pan is securely anchored in place on the underside of the pipe and straddling the connection to be coated. The pan shall be wide enough so that the entire connection will be coated.

Hot coal-tar enamel is poured into the pan, from one side only, until the pan is completely filled. The drain plug or valve is then opened and the excess coal-tar drained out. The pan can then be removed. Details of the coating pan and corresponding dimensions are given in AWWA Manual M-11.

The upper portion of the connection, and all remaining exposed steel pipe, will then be coated by the use of a

dauber. The coal-tar coating shall be applied in at least 2 coats for a minimum thickness of 1/16 inch. The daubers and method of application shall conform to AWWA C-203. No thinning will be allowed.

(C) Cocoon Method: The cocoon is formed by placing glass fiber cloth or roofing paper, of the proper width, around the underside of the connection and adjacent exposed steel pipe. The edges of the cocoon shall be securely fastened to the pipe. Backfill is lightly placed to the spring line, and the top of the cocoon is opened and layed back on the filled area and hot coal-tar enamel poured, from one side only, until the cocoon is completely filled. The loose backfill prevents rupture of the cocoon. The upper portion of the connection and remaining exposed steel pipe shall be coated as above.

(D) Gaskets: Except as otherwise provided, all gaskets for pipe lines shall be one piece full faced gaskets from one-ply cloth inserted SBR rubber material. Gaskets for flanges 20 inches and smaller shall be from 1/16 inch thick material. Gaskets for flanges 24 inches and larger shall be from 1/8 inch thick material. Gasket material shall be J-M 109 as manufactured by Johns-Manville Corporation or an approved equal. Physical characteristics of the rubber compound shall meet ASTM D2000, Class 4AA805A13.

(E) Flanges: Cast iron flanges shall conform to AWWA C-110 as to material, diameter, thickness, drilling, etc. Steel flanges shall be ring or hub type, and shall conform to AWWA C-207, Class D. All flanges shall be drilled and have flange diameters and bolt circles conforming to AWWA C-110, except bolt holes will be 1/8 inch larger than the bolts given for the various sizes. All bolts shall be as specified above and all flanges shall have a flat facing.

610.14 BLOCKING:

All pipe lines, valves and fittings 16 inches and smaller in diameter shall be blocked with concrete thrust blocks in accordance with standard details. Thrust block areas for pipe, valves and fittings larger than 16 inches in diameter shall be calculated for each size pipe, valve and fitting to be installed and shown on the plans.

Thrust block areas shall be calculated on the basis of 200 psi test pressure bearing against undisturbed 3,000 psf soil.

If soil or pressure conditions other than those stated above are encountered, the thrust block areas shall be calculated and submitted for approval. The areas stipulated in the standard details are minimums and shall not be decreased.

When restrained/welded joints are specified to resist thrust forces, blocking is not required.

With the Engineers approval, restrained/welded joints may be used in lieu of thrust blocks to resist thrust forces.

610.15 HYDROSTATIC TESTING:

Water lines, including all fittings and connections to the water mains shall be tested for watertightness by subjecting each section to hydrostatic testing in accordance with applicable provisions of AWWA C-600, except as modified below, and shall consist of pressure testing and allowance testing.

The test section shall be slowly filled with potable water and all air shall be vented from the line. The rate of filling shall be as determined by the Superintendent of Water Distribution, with at least 24 hour notice required before tests are scheduled.

The Contractor shall provide all vents, piping, plugs, bulkheads, valves, bracing, blocking, pumps, and measuring devices and all other equipment necessary for making the tests, including pressure gages, and shall pay the Contracting Agency for water used in the tests.

Hydrostatic Testing: Pressure testing may be made before or after backfilling, but backfilling must be completed before allowance testing. If the pipe is center-loaded, a visual inspection for leaks may be made along the pipe line while the test section is under test pressure, and all visible leaks repaired. However, if mechanical compaction is to be used in the backfilling operations as spelled out in AWWA C-600, the tests shall not be made until the backfilling is completed and compacted. Backfill and compaction for the full distance encompassed by restrained\welded joints shall be completed prior to testing. All connections, blowoffs, hydrants and valves shall be tested with the main as

far as is practicable. Hydrostatic testing shall not begin until the pipe has been filled with water for at least 24 hours to allow for air venting.

(A) Pressure Testing: Unless otherwise noted in the contract documents, the minimum prescribed test pressure shall be at least 200 psi for lines smaller than 16 inches and 150 psi for lines 16 inches or larger, not to exceed 5 psi over the minimum prescribed test pressure, as measured at the lowest end of the section under test. The duration of each pressure test shall be at least 2 hours, during which time the test section shall not drop below the minimum prescribed test pressure. If the pressure in the pipe test section has not stabilized by the end of the testing period, a hydrostatic retest will be required.

Each section of a new line between sectionalizing valves or between the last sectionalizing valve and the end of the project shall be tested separately as required in AWWA C-600, and/or as modified in these specifications, except that any such section less than 500 feet in length may be tested with the adjacent section, if both sections of line have the same pipe class rating. No section greater than 1/2 mile in total pipe length shall be tested without special written permission of the Engineer.

(B) Testing Allowance/Makeup Water: Makeup water volume shall be determined after the pressure test has been satisfactorily completed and all backfilling and compaction has been completed to top of trench. Testing allowance shall be defined as the maximum quantity of makeup water necessary to be supplied into the pipe line section under test to restore the ending test pressure to the beginning test pressure, after the pipe line has been filled with water and all air expelled. The Contractor shall furnish the necessary apparatus and assistance to conduct the test.

The duration of each makeup water test shall be at least 2 hours. To pass the allowance testing, the quantity of makeup water from the pipe line shall not exceed the makeup water quantity allowed by the following formula, from AWWA C-600:

$$M = \frac{SD\sqrt{P}}{148{,}000}$$

in which

M = testing Allowance (makeup water), in gallons per hour.

S = length of pipe tested, in feet

D = nominal diameter of pipe, in inches.

P = test pressure of the pipe being tested, per 610.15 (A)

Should the test on any section of the pipe line require more makeup water than allowed by the above formula, the Contractor shall locate and repair the defective pipe, fittings, or joint until the makeup water volume is within the specified allowance. All repairs and retests, if required, shall be made at the Contractor's expense.

Connections to the existing pipelines or existing valves shall not be made until after that section of new construction has satisfactorily passed the hydrostatic tests.

Ductile pipe used in conjunction with ACP will be tested to the ACP standards, unless otherwise directed by the Engineer. High pressure systems of all ductile iron will be tested in accordance with AWWA C-600, Section 4.1.

610.16 DISINFECTING WATER LINES:

After pressure testing and before placing in service, all water lines shall be disinfected. Disinfection shall be accomplished in accordance with Section 611. All valves in the lines being disinfected shall be opened and closed several times during the 24 hour period of disinfection.

610.17 PAVEMENT AND SURFACING REPLACEMENT:

Pavement and surfacing replacement shall be in accordance with the requirements of Section 336.

610.18 CLEANUP:

When testing, chlorination, compaction, and cleanup do not follow pipe laying in an orderly manner, the Engineer reserves the right to close down trenching and pipe laying until these operations are adequately advanced.

610.19 MEASUREMENT AND PAYMENT:

(A) Pipe:

(1) Measurement of all pipe shall be of the linear feet of pipe installed, measured along the centerline of the pipe, through all valves and fittings, from the centerline of the fittings or centerline of valves on ends of pipe to the centerline of fittings, centerline of valves on ends of pipe or to the end of pipe, as the case may be, for all through runs of pipe. Measurement shall be to the nearest 0.1 foot.

Measurement of branch line pipe shall start at the centerline of valve at connection to the main. Branches of tees that are valued and capped will not be measured. Measurement of meter service pipe shall be from the centerline of the new main to the connection at the meter, along the centerline of service pipe.

(2) Payment will be made at the unit price bid per linear foot of each type and size of pipe called for in the proposal. Such payment shall be compensation in full for furnishing and installing the pipe and fittings, specials, adapters, etc., complete in place, as called for on the plans and/or on the standard details, and shall include all costs of excavation, removal of obstructions, shoring and bracing, bedding, backfilling, compaction, maintenance of traffic, testing, disinfecting, connections to existing lines or works, and all work not specifically covered in other pay items.

A contingent item for fittings not shown on the plans shall be included in the proposal. Payment will be made at the unit price bid per pound on the theoretical weight of the fittings installed, which shall be compensation in full for furnishing and installing the fittings.

(1) Service Connection To Existing Water Meters: Measurement shall be of the number of unit connections made for water meter services, as called for in the proposal. Each proposal item unit shall consist of the connection to the water main and to the meter, as required in standard details.

(2) Payment will be made at the unit price bid for each unit water meter service connection and shall be compensation in full for labor materials (other than pipe) equipment, tapping, and all necessary incidentals. Payment for new service pipe required to make the connection will be made separately, as stipulated above.

(B) Relocation of Existing Meters and Boxes: Measurement shall be of the number of meters and boxes moved and reinstalled. Payment will be made at the unit price bid in the proposal for each meter and box relocated and installed.

(C) Permanent Pipe Supports and Encasement of Existing Pipes: Measurement shall be of each unit included in the proposal, and payment shall be compensation in full for supporting or encasing existing pipe, as required on the plans, including excavation, form work, reinforcing, concrete, handling and controlling flows in the existing pipe, removing and replacing existing pipe where necessary, supporting, backfilling and compaction, and pavement and/or surfacing replacement required in excess of pay width(s) allowed in Section 336.

(D) Concrete Thrust Blocks: Concrete thrust blocks and anchors for all pipe 16 inches and larger shall be measured by the cubic yard(s) of concrete placed, as required on the plans and/or as directed by the Engineer. Payment will be made at the unit price bid per cubic yard, and shall be compensation in full for excavation, formwork, placing and finishing concrete, reinforcing, backfilling and compaction, and pavement and/or surfacing replacement required in excess of pay width(s) allowed in Section 336. All thrust blocks and anchors for 12 inches and smaller pipe shall be included in the linear foot cost of the pipe.

(E) Valves: Measurement of and payment for valves, tapping sleeves and valves, and valve boxes shall be for each item furnished and installed, as designated in Section 630.

(F) Fire Hydrants: Measurement shall be the number of fire hydrants installed. Payment will be at the unit price bid for the installation of each fire hydrant complete in place and in operating condition. The 6 inches cast iron pipe and fittings, required for making the connection from the main to the hydrant, shall be a separate pay item in the proposal as described above.

(H) Pavement and/or Surfacing Replacement**:** Payment for pavement and/or surfacing replacement will be made as stipulated in Section 336, except as otherwise established in this specification. The cost of pavement and/or surface replacement required for meter service installations shall be included in the price bid for meter service pipe.

- End of Section -

TOWN OF BUCKEYE

Engineering Department

Case Number: 13-22

Date : 07-19-13

To: MAG Specifications and Details Committee

From: Craig Sharp

RE: Section 625 - Manhole construction and drop sewer connections

Purpose: deleting the references to bricks on manholes

Revisions:

This revision is to Delete references for the use of bricks in sanitary sewer manholes.

SECTION 625

MANHOLE CONSTRUCTION AND DROP SEWER CONNECTIONS

625.1 DESCRIPTION:

625.1.1 Sewer Manholes: Construction shall consist of furnishing all materials and constructing manholes complete in place, as detailed, including foundation walls, ~~cast iron steps,~~ manhole frames, covers, and any incidentals thereto, at locations shown on the plans.

625.1.2 Drop Sewer Connections: Construction shall consist of furnishing all materials and constructing drop sewer connections complete in place as detailed, including foundation materials, pipe, and any incidentals thereto, at locations shown on the plans.

625.2 MATERIALS:

Unless otherwise shown on the plans or specified in the special provisions, materials to be used shall conform with the following:

Bricks for manholes ~~Section 775~~shall not be used.

Cement mortar for manholes Class D, Section 776.

Concrete for manholes Class A, for drop sewer connection Class C, Section 725.

Pipe used in manholes or drop sewer connections shall comply with pipe requirements of Section 615.

Manhole frame, cover ~~and steps~~ Section 787 and cast in accordance with standard details.

~~Plastic manhole steps, which conform to O.S.H.A. and A.S.T.M. C 487 requirements, and steel manhole steps, which are completely encapsulated in corrosion resistant rubber and conform to O.S.H.A. and A.S.T.M. C 478 requirements, may be substituted for cast iron manhole steps. The manufacturer shall furnish the Engineer a certification indicating conformance.~~
Manhole steps shall not be used.

625.3 CONSTRUCTION METHODS:

625.3.1 Manholes: Manholes shall be constructed ~~of brick,~~ of precast concrete sections, or of cast in place concrete ~~with cast iron manhole steps~~, frames and covers, in accordance with the standard details. The invert channels shall be smooth and semi-circular in shape, conforming to the inside of the adjacent sewer sections. Changes in direction of flow shall be made with a smooth curve, having a radius as large as the manhole will permit. Changes in size and grade of the channels shall be made gradually and evenly.

Invert channels ~~may~~ shall be formed of concrete and ~~or brick masonry~~ have~~ing~~ a smooth mortared surface, may be half tile laid in concrete ~~or brick,~~ or may be constructed by laying full section of sewer pipe through the manhole and breaking out the top half after the surrounding concrete ~~or brick masonry~~ has hardened. The ~~floor~~ bench of the manhole outside the channels shall be smoothed and shall slope towards the channels.

The excavation shall be in such a manor, access is maintained around the manhole base before, during, and after placement of the manhole. ~~made cylindrical to a diameter sufficient in size to permit sheeting if necessary and leave room that the bricks may be laid in a workmanlike manner and the outside mortar coat properly applied or the precast concrete sections or forms may be properly assembled.~~

A concrete foundation of Class A concrete shall be poured in accordance with the Standard Details and Section 505.

~~Brickwork shall not be laid upon a concrete foundation less than 24 hours after such foundation has been poured. No brickwork shall be laid in water, nor, except as prescribed for curing, shall water be allowed to stand or run on any brickwork until the mortar has thoroughly set. Where new work is joined to existing unfinished work, the contact surfaces of the latter shall be thoroughly cleaned and moistened.~~

~~Bricks shall be thoroughly moistened prior to placing, and shall be laid in full cement mortar beds. Every course may be a header course, but at least every fourth course shall be a header course. The horizontal cross section of the manhole shall be circular unless otherwise called for on the plans or standard details. An oval or egg shaped section will not be permitted. A double row lock course of brick in the manhole wall shall be arched over the top half of the circumference of all inlet and outlet pipes. The brick manholes shall be mortared outside with ½ inch of cement mortar as shown on the standard details. Inside of brick wall shall be neatly pointed. The mortar coat shall be cured with a liquid membrane forming compound conforming with Section 726 immediately after mortar has been placed and finished.~~

Frame and Cover. All machined surfaces on the frame and cover shall be such that the cover will lie flat in any position in the frame and have a uniform bearing through its entire circumference. Any frame and cover which creates any noise when passed over by automobiles shall be replaced. Frames shall be set firmly in a bed of mortar true to line and grade, all as shown on the plans and as called for in these specifications.

Backfilling shall be done in accordance with the requirements for trench backfilling as stated in Section 601.

625.3.2 Drop Sewer Connections: Drop sewer connections shall be constructed in conformance with standard details, as the case may be.

Backfilling shall be done in accordance with the requirements for trench backfilling as stated in Section 601.

625.4 MEASUREMENT:

Measurement will be per manhole installed, complete in place, regardless of depth.

625.5 PAYMENT:

Payment will be made at the unit price bid each manhole, and shall be compensation in full for furnishing and installing manhole, complete, with formed or pre-cast inverts, concrete foundation, sanitary sewer drop connections ~~ladder rungs,~~ sheeting and bracing, removal of obstructions cast iron frame and cover, excavation and backfill, paving cut replacement in excess of the applicable pay widths authorized in Section 336, and any incidentals thereto, in conformance with the plans and specifications.

~~Payment will be made at the unit price bid each, and shall be compensation in full for furnishing and installing vitrified clay pipe sanitary sewer drop connections, concrete encasement, excavation, backfilling, water settling, compaction, sheeting and bracing, removal of obstructions, paving cut replacement, in excess of the applicable pay widths authorized in Section 336, testing, and all work incidental thereto in conformance with the plans and specifications.~~

- End of Section -

TOWN OF BUCKEYE

Engineering Department

Case Number: 13-22

Date: 06-05-13

To: MAG Specifications and Details Committee

From: Craig Sharp

RE: MAG Section 775 - Brick and concrete masonry units (blocks)

Purpose: Deleted outdated references for brick use in manholes.

Revisions:

Deleted references for the use of bricks on sanitary sewer manholes.

SECTION 775

BRICK AND CONCRETE MASONRY UNITS (BLOCKS)

775.1 BRICK:

Brick shall be whole, sound, and hard burned and shall give a clear ringing sound when struck together. They shall be uniform in quality and shall be culled or sorted before delivery to the work.

775.1.1 ~~Manhole~~ Brick: ~~Sewer and water manhole b~~Brick shall conform, except for dimensional tolerances, to the requirements of ASTM C32, Grade MM.

~~Manhole b~~Brick shall conform to Table 775-1.

TABLE 775-1			
~~MANHOLE~~ BRICK DIMENSIONS			
Brick	**Inches Depth**	**Inches Width**	**Inches Length**
Standard Size Allowable Variations	2 1/4 ±1/8	3 1/2 ±1/8	7 1/2 ±1/4

The following paragraphs shall be added to the section on visual inspection:

No individual brick shall be rejected unless it shows visual evidence of major cracking. A major crack is defined as one that has at least one complete separation, for a distance of 1 3/4 inches, through the brick in any direction, including any cored area. Such a crack shall be regarded as affecting the serviceability of the brick and shall be rejected and not used in the structure.

Fifty bricks may be sampled at random intervals from any cube for visual inspection. Of the 50 samples, 45 must pass visual inspection for major cracks. Should less than 45 pass, the cube of brick shall be rejected and the brick must not be used in the structure.

775.1.2 Building Brick: Building brick shall conform to the requirements of ASTM C62, grade MW.

775.1.3 Facing Brick: Facing brick shall conform to the requirements of ASTM C216, Grade MW, Type FBS. The size, color, and texture shall be as specified on the plans or as approved by the Engineer.

775.2 CONCRETE MASONRY UNITS:

Unless otherwise noted on the plans or special provisions, concrete masonry units shall conform to ASTM C90, Normal Weight, Type I with a minimum compressive strength of 1900 psi.

The units shall be fully cured and shall have been made not less than 28 days prior to delivery.

The moisture content at the time of delivery shall not exceed 30 percent of the minimum absorption value of the units. The Contractor shall provide any protection he deems necessary to maintain the units in this condition until time of use.

The linear change from saturated to cool oven dry shall not exceed 0.0054 inches per linear foot or 0.045 of 1 percent conducted in accordance with test method in ASTM C426.

The units shall be made with normal weight aggregate conforming to ASTM C33.

The nominal size of the units shall be as indicated on the plans. The overall dimensions for width, height and length shall differ by not more than ±1/8 inch from the specified standard dimensions. Standard dimensions of units are the manufacturer's designated dimensions. Nominal dimensions of units are equal to the standard dimensions plus the thickness of one mortar joint.

No less than 5 samples of the units shall be submitted to the Engineer for approval and to show the full variance of texture and full range of color. Units used in the work shall match the approved samples. These samples may be tested for strength.

All units shall be sound and free of cracks or other defects that would interfere with the proper placing of the unit or would significantly impair the strength or permanence of the construction. When units are to be used in an exposed setting, the face or faces that are to be exposed shall not show chips or cracks, not otherwise permitted, or other imperfections when viewed from a distance of not less than 6 feet under diffused lighting.

Units that are intended to serve as a base for plaster or stucco shall have a sufficiently rough surface to afford a good bond.

End of Section -

MARICOPA COUNTY
Department of Transportation

MEMORANDUM

Date: July 8, 2013

To: MAG Specifications and Details Committee

From: Robert Herz, MCDOT Representative

Subject: Revisions for Detail 270 FRAME AND COVER **Case 13-24**

PURPOSE: Revise detail to match frame and covers currently being used.

REVISIONS:

- Delete chain and increase lid depth to four inches.
- Revise lid depth shown on Detail 270 and referenced on Detail 391-1.

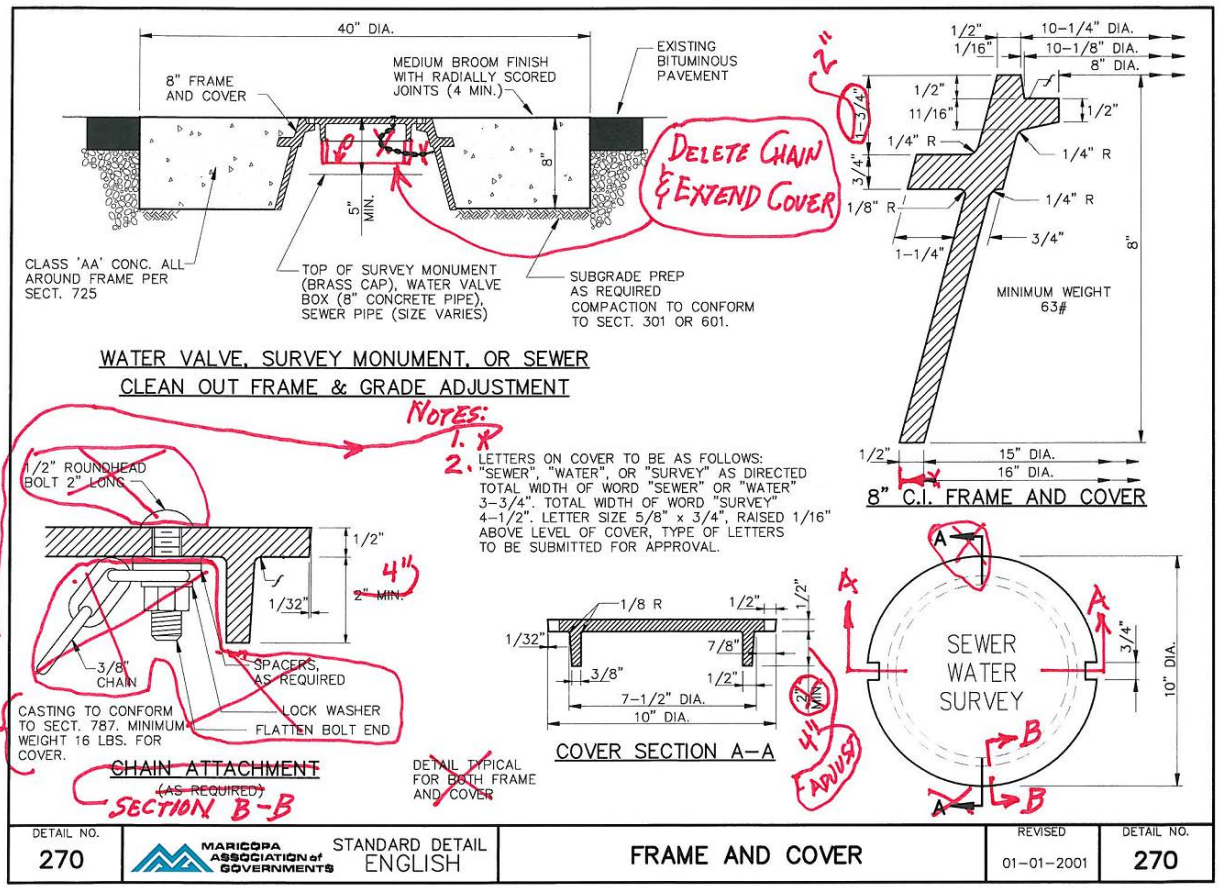

2901 West Durango Street Phoenix, Arizona 85009 Phone: 602-506-4760 Fax: 602-506-5969

STAR® PIPE PRODUCTS

TABLE OF CONTENTS

Municipal & Construction Castings
VALVE BOXES

DETAIL 198 VALVE BOX

VB-0029

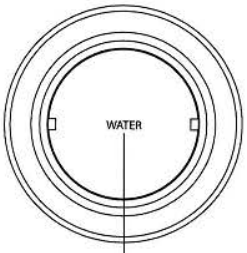

LID LETTER OPTIONS
WATER
SEWER
SURVEY
*Unless specified, all VB shipped with "WATER" lids.

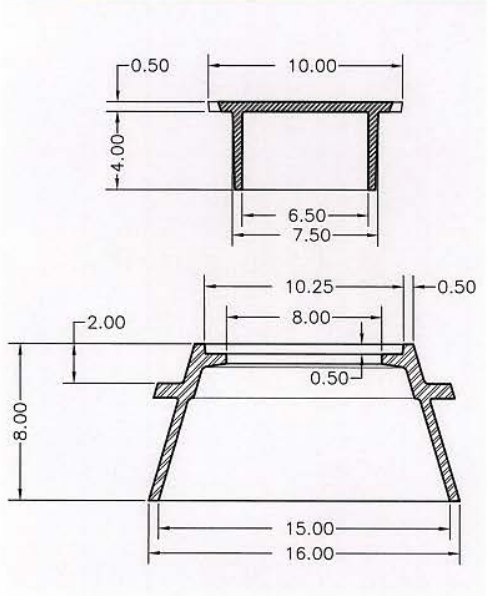

ITEM CODE	DETAILS
VBDTL198	COMPLETE
VBDTL198L	WATER LID
VBDTL198LSE	SEWER LID
VBDTL198LSU	SURVEY LID
VBDTL198B	BASE

Notes:
- Material - Cast Iron Per ASTM A48 Class 30B
- Dimensions in Inches

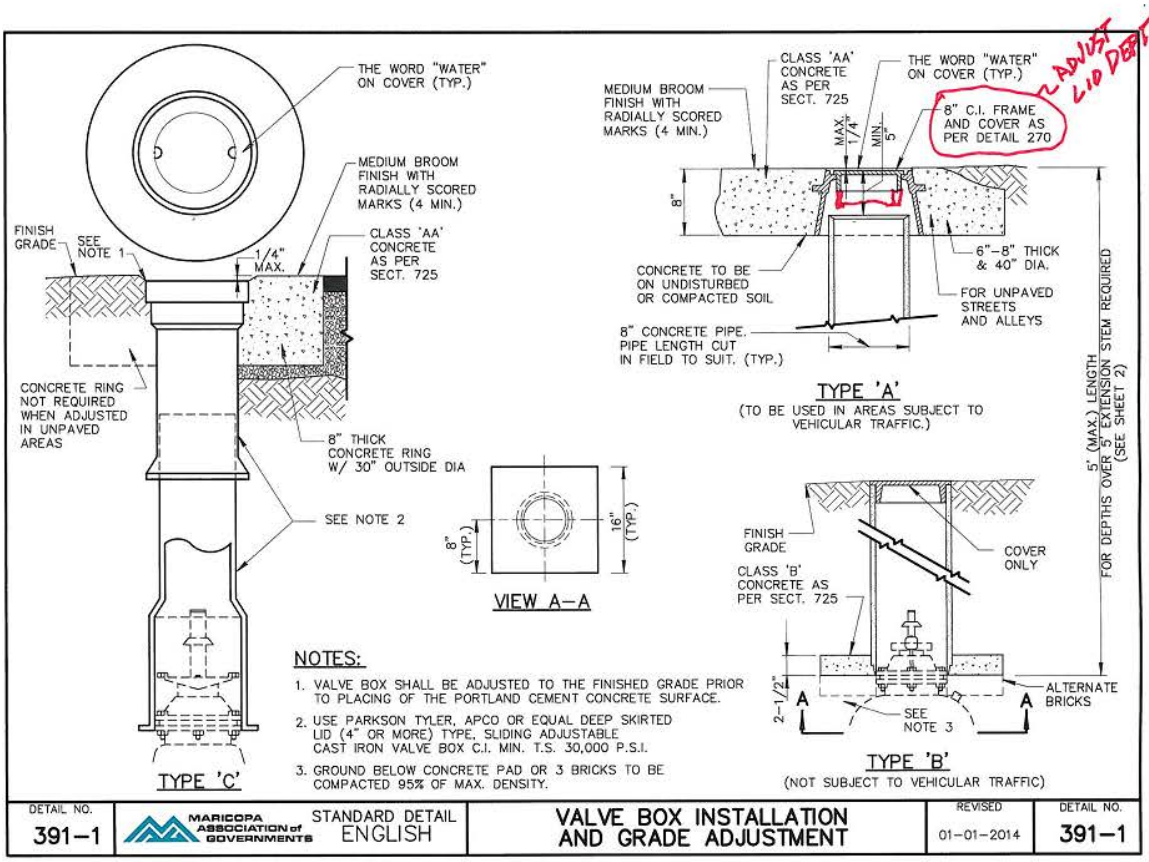

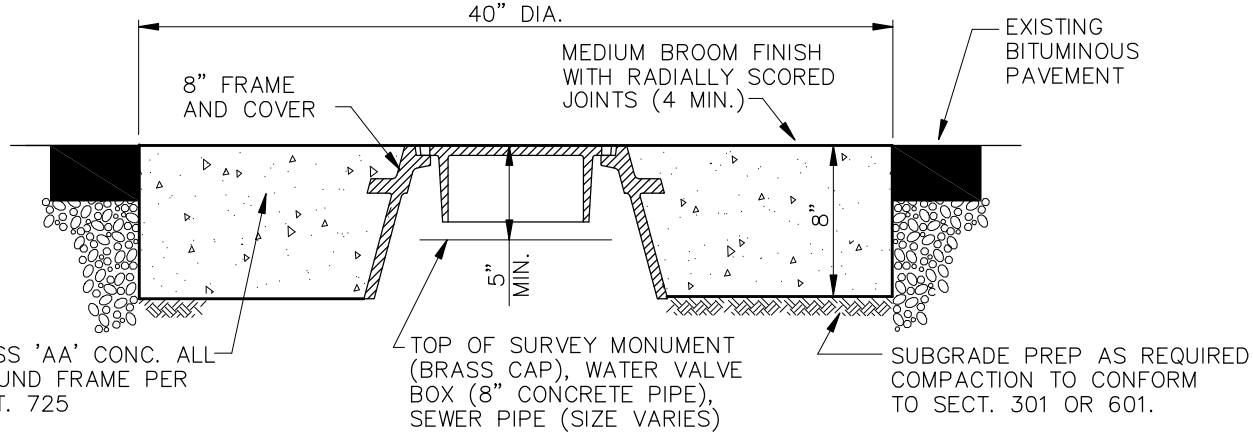

CLEAN OUT FRAME & GRADE ADJUSTMENT WATER VALVE, SURVEY MONUMENT, OR SEWER

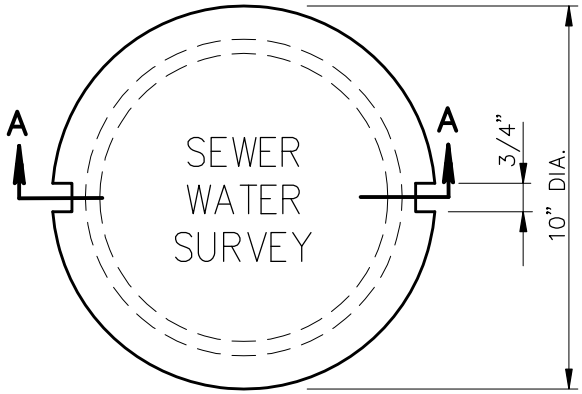

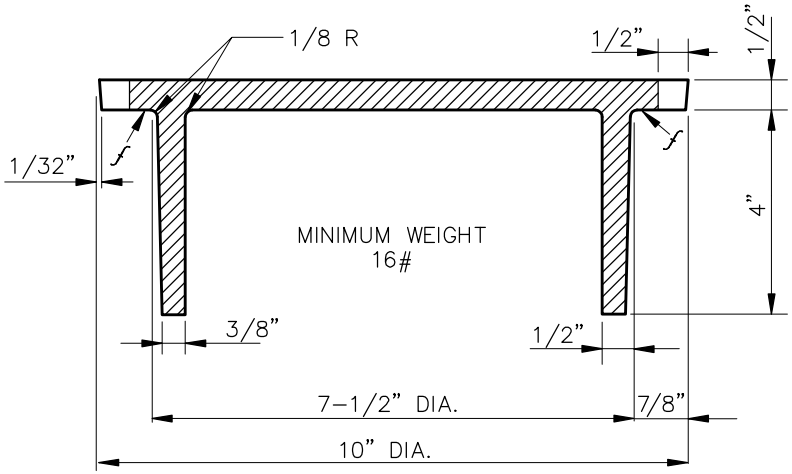

COVER SECTION A-A

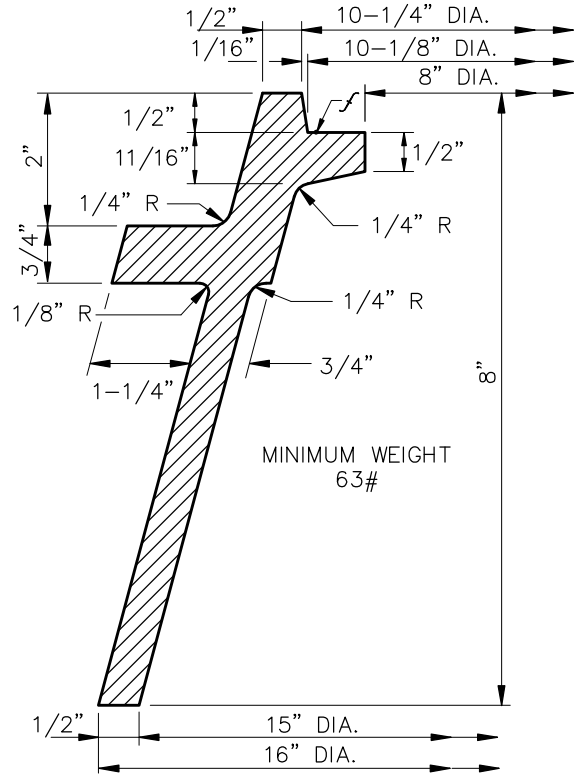

8" C.I. FRAME AND COVER

NOTES:

1. CASTING TO CONFORM TO SECT. 787.
2. LETTERS ON COVER TO BE AS FOLLOWS:
   "SEWER", "WATER", OR "SURVEY" AS DIRECTED TOTAL WIDTH OF WORD "SEWER" OR "WATER" 3-3/4". TOTAL WIDTH OF WORD "SURVEY" 4-1/2". LETTER SIZE 5/8" x 3/4", RAISED 1/16" ABOVE LEVEL OF COVER, TYPE OF LETTERS TO BE SUBMITTED FOR APPROVAL.
3. ƒ INDICATES MACHINE FINISHED SURFACE.

DETAIL NO.				REVISED	DETAIL NO.
270	MARICOPA ASSOCIATION of GOVERNMENTS	STANDARD DETAIL ENGLISH	FRAME AND COVER	01-01-2014	270

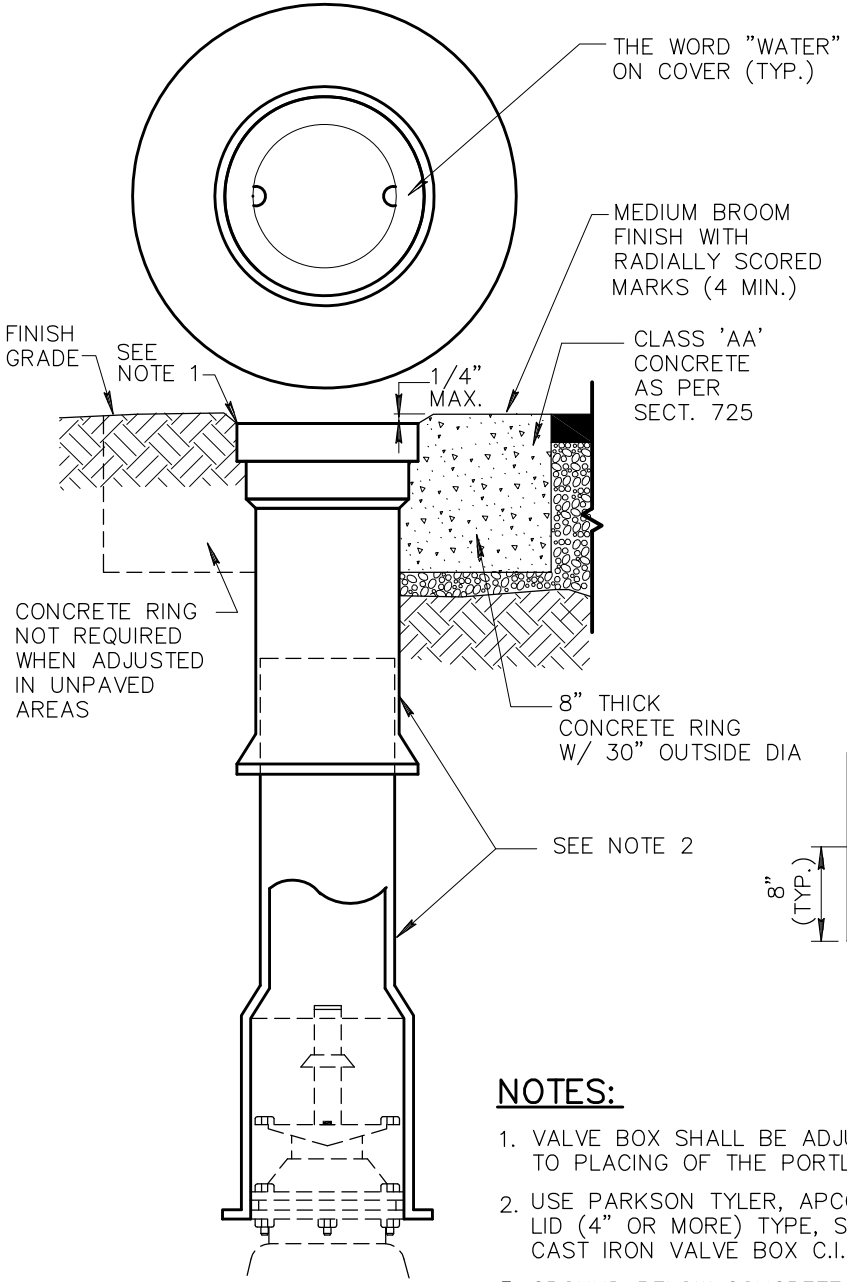

TYPE 'C'

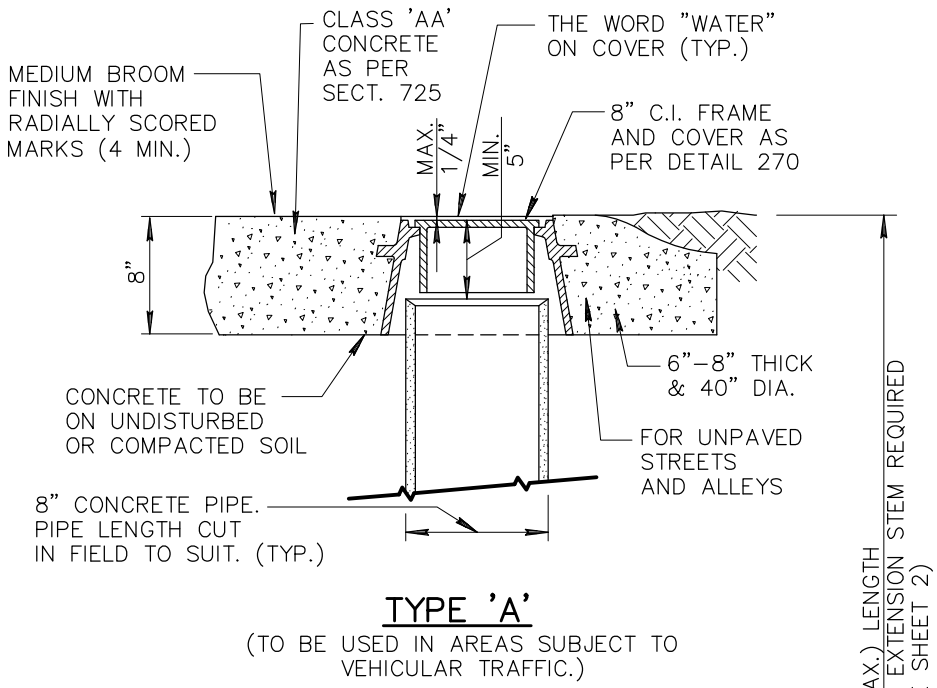

TYPE 'A'

(TO BE USED IN AREAS SUBJECT TO VEHICULAR TRAFFIC.)

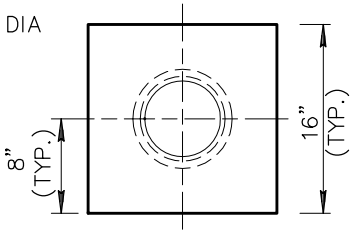

VIEW A–A

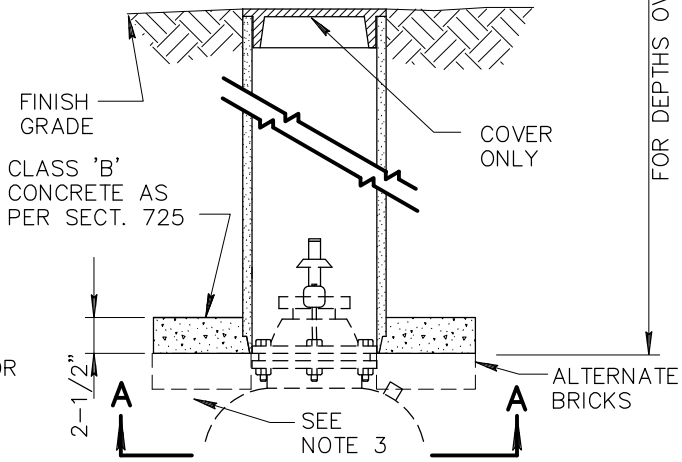

TYPE 'B'

(NOT SUBJECT TO VEHICULAR TRAFFIC)

NOTES:

1. VALVE BOX SHALL BE ADJUSTED TO THE FINISHED GRADE PRIOR TO PLACING OF THE PORTLAND CEMENT CONCRETE SURFACE.
2. USE PARKSON TYLER, APCO OR EQUAL DEEP SKIRTED LID (4" OR MORE) TYPE, SLIDING ADJUSTABLE CAST IRON VALVE BOX C.I. MIN. T.S. 30,000 P.S.I.
3. GROUND BELOW CONCRETE PAD OR 3 BRICKS TO BE COMPACTED 95% OF MAX. DENSITY.

DETAIL NO.				REVISED	DETAIL NO.
391–1	MARICOPA ASSOCIATION of GOVERNMENTS	STANDARD DETAIL ENGLISH	VALVE BOX INSTALLATION AND GRADE ADJUSTMENT	01–01–2014	391–1

EXPANSION JOINT FILLER

729.1 ~~PREMOLDED~~ PREFORMED JOINT FILLER:

Expansion joint filler materials shall consist of ~~premolded~~ preformed strips of a durable resilient compound and comply with ASTM D1751, D1752, or D2628, as specified by the Contracting Agency or as approved by the Engineer.

729.2 POUR TYPE JOINT FILLERS FOR PORTLAND CEMENT CONCRETE PAVING (PCCP):

Pour type joint fillers shall comply with ASTM D3406 ~~D1850, D1190, D1854,~~ or ~~with the following formulation,~~ as ~~specified by the Contracting Agency~~ approved by the Engineer. Joint sealant shall not contain any coal- tar materials.

The following requirement shall be added to paragraphs 7.1 of ASTM D 3406:
The minimum ambient temperature during application and ambient temperatures under various storage conditions shall be clearly marked on the container.

~~Asphalt latex joint filler shall consist of asphalt latex emulsion and sodium fluosilicate furnished in separate containers and mixed on the site. The emulsion shall consist by volume of 60 parts AR-1000 asphalt conforming to the requirements of Section 711, 40 parts of synthetic latex, GRS-Type 4, and 5 to 10 parts of sodium fluosilicate, half strength. The emulsion and sodium fluosilicate shall not be mixed until the joint is ready to be filled. The amount of sodium fluosilicate to be mixed with the emulsion shall be approximately 3 to 5 percent by weight of the emulsion. The joint to be filled shall be thoroughly cleaned and surface dry.~~

~~The sealing compound shall consist of paving asphalt, Grade AR-1000 conforming to the provisions of Section 711, emulsified with rubber latex in the presence of a suitable emulsifying agent. Rubber latex designated as GRS-Type 4, or any other approved type, containing approximately 40 percent solids.~~

~~The resulting emulsion shall consist of a minimum of 55 percent of paving asphalt and a minimum of 36 percent of rubber latex and shall conform to the requirements set forth in Table 729-1.~~

~~TABLE 729-1~~			
~~ASPHALT-LATEX EMULSION JOINT SEALING COMPOUND~~			
~~SPECIFICATION DESIGNATION~~	~~TEST METHOD~~	~~LIMITS~~	~~REMARKS~~
~~Furol Viscosity at 77°F.~~	~~AASHTO T-72~~	~~50-250 seconds~~	~~Before adding gelling agent.~~
~~Sieve Test~~	~~AASHTO T-59~~	~~1% Max.~~	~~Before adding gelling agent.~~
~~Penetration at 77°F.~~	~~ASTM D217~~	~~50-250~~	~~The penetration test is made on a specimen prepared by stirring 5% of sodium fluosilicate into the asphalt latex emulsion in a 6 ounce deep ointment can. The specimen is then allowed to stand in the air at a temperature of 77°F. ±2° for a period of 30 minutes and is then penetrated with a grease cone under a total load of 150 grams.~~
~~Elasticity~~		~~70% Min.~~	~~After addition of 5% of sodium fluosilicate and curing for 24 hours at 100°F.±2°, the specimen shall have an elastic recover of not less than 70%.~~
~~Dehydration~~		~~Loss 30% maximum~~	~~Twenty-five grams of emulsion, prior to adding the gelling agent, is placed in an 8 ounce flat ointment can and dehydrated in a suitable oven maintained at a temperature of 200°F.±2° for a period of 24 hours.~~
~~Time of Set~~		~~15-60 minutes~~	~~After mixing the emulsion with 1% to 4% by weight of powdered sodium fluosilicate the emulsion shall harden or develop a set in from 16 to 60 minutes, under field conditions.~~

DRAFT

729.3 TEST REPORT AND SHIPMENT CERTIFICATE:

Each shipment shall be accompanied by a certificate ~~in triplicate~~ from the supplier that the material will comply with the above specifications and such certificate shall be delivered to the Engineer. ~~The certificate shall show the shipment number for the entire lot of material contained in the shipment and shall also show a list which will enable the Engineer to identify each individual container by the supplier's batch number, with which each container shall be plainly marked.~~

~~**729.4 APPLICATION:**~~

~~At no time shall emulsion types be subjected to a temperature below 40°F. Prior to application, the material may be warmed, if necessary, to permit proper pouring of the joints. The method of heating shall be carefully controlled to avoid overheating of any part of the container or mixture and under no circumstances shall emulsions be heated to a temperature greater than 130°F.~~
~~Joints and cracks shall be thoroughly cleaned by hand or mechanical means immediately in advance of pouring the filler material. When new pavement has been cured by the Pigmented Sealing Compound Method, the joints and cracks shall be thoroughly scrubbed by means of a wire brush or a cloth mop saturated with gasoline or by other approved means.~~

~~All joints and cracks shall be surface dry before application of the joint sealer. No sealer shall be placed during unsuitable weather or when the atmospheric temperature is below 50°F., or when weather conditions indicate that the temperature may fall to 32°F within 24 hours.~~

~~The joints and cracks shall be filled in a neat and workmanlike manner by means of a cornucopia pot or other approved method.~~

DRAFT

EXPANSION JOINT FILLER

729.1 PREFORMED JOINT FILLER:
Expansion joint filler materials shall consist of preformed strips of a durable resilient compound and comply with ASTM D1751, D1752, or D2628, as specified by the Contracting Agency or as approved by the Engineer.

729.2 POUR TYPE JOINT FILLERS FOR PORTLAND CEMENT CONCRETE PAVING (PCCP):
Pour type joint fillers shall comply with ASTM D3406 or as approved by the Engineer. Joint sealant shall not contain any coal- tar materials. The following requirement shall be added to paragraphs 7.1 of ASTM D 3406:
The minimum ambient temperature during application and ambient temperatures under various storage conditions shall be clearly marked on the container.

729.3 TEST REPORT AND SHIPMENT CERTIFICATE:
Each shipment shall be accompanied by a certificate from the supplier that the material will comply with the above specifications and such certificate shall be delivered to the Engineer.

DRAFT

Water/Sewer Working Group Meeting

Meeting Notes
July 23, 2013

Opening:
A meeting of the Specifications and Details Water/Sewer Working Group was called to order by chair Jim Badowich on July 23, 2013, at 1:30 p.m. in the MAG Cottonwood Room.

1. Introductions/Attendance
Tony Ayala (Avondale), Jim Badowich (Avondale), Jared Dusha (Contech), Arturo Chavarria (Hanson), Jami Erickson (Phoenix), Art Glover (FCDMC), Rob Godwin (Goodyear), Bob Herz (MCDOT), Mike Hook (ACPA), Peter Kandaris (DGA), Paul Nebeker (Pipe Right), Matt Savage (Ferguson), Craig Sharp (Buckeye), Raffi Soghomonian (Armorcast), Wally Sunnaa (Armorcast), Gordon Tyus (MAG), Arvid Veidmark (Specialized Services), Steve Waller (Rinker), Warren White (Chandler)

2. Case 13-21: Precast Manhole Specifications
Craig Sharp handed out the latest version of the case. He said a few typos were noted during the committee meeting.

3. Case 13-22: Manhole Revisions/Update
Jim Badowich handed out redlined copies of the manhole details, 420-1, 420-2, 421 and 422. He reviewed each drawing in detail, highlighting major changes or items needing further discussion. These included the removal of bricks and steps, overall ring height, and revisions of the notes. He also said he wanted to show the entire manhole section. Other topics discussed included: size and number of adjustment rings, methods of vacuum testing, the use of steel reinforcement for installations greater than 18' deep, the use of natural material under cast-in-place manhole bases, types of coatings and pesticide treatments. Coatings could be addressed in the specifications or through agency material lists. Mr. Badowich said he would work with Mr. Sharp to draft the details and add them to Case 13-22 in the future, since changes in the details should match the changes proposed in the specifications.

4. Case 12-12: SRPE Pipe (Proposed Section 739)
Case 12-12 was approved at the last committee meeting. Art Glover of the Flood Control District asked if the larger diameter sizes have been used in the Valley. Jim Badowich said 60" SRPE was used on an ADOT project on I-10. Jared Dusha of Contech said he could supply Mr. Glover with more information.

5. Case 13-15: Revisions to 603, 615 and 618 for flexible pipe
Warren White handed out information provided at the last committee meeting. It included new definitions for trenching and backfill terms as well as updated detail drawings 200-1 and 200-2. Members agreed about the new terminology, but there was some discussion about where to put the specifications for placing the materials from the foundation to one foot above the springline. Warren White said he and some of the industry representatives thought it made sense to keep it in Sections 601 and 603. Mr. Badowich thought it might make sense to put it in 610, 615 and 618 since the initial backfill is integral to the pipe design. It was also noted that subsections for

rigid and flexible pipe installation would be needed. There also needed to be updated post installation testing specifications.

7. Case 13-20: Section 610 Revisions and Water Testing/Flushing
Rob Godwin said the current case focuses primarily on updating the testing procedures to meet AWWA requirements. He was taking all additional comments, and will be making further revisions and possibly a new case next year. Mr. Godwin asked what should be done with elevation changes affect the pressure testing. Paul Nebeker asked how long the bacteria test was good. Jami Erickson said it must be tied into the system within three days, than it is the agencies responsibility.

8. Case 13-16: Trenchless Installation of Steel Casing
Arvid Veidmark passed out a revised copy (version 5) of the case that made updates based on the comments from the previous committee meeting. It also included information on spacer placement. There was discussion on using spacers, the use of wood skids for sewer, and using a flexible coupler for clay pipe so it does not shear before connecting to the manhole. There was also discussion on grouting voids and ramming pipe. Mr. Veidmark said he would provide revisions to Herz, Badowich and Tyus.

9. New Issues
Raffi Soghomonian and Wally Sunnaa of Armorcast provided information and sample detail drawings for polymer concrete meter boxes and covers. They are widely used since they tend to be affordable, less prone to theft and do not interfere with electronic meter reading devices. The package of detail drawings they provided demonstrates how their products match the existing MAG details for concrete meter boxes and steel covers sizes.

10. Next Meeting Date
The next meeting of the Water/Sewer working group is tentatively scheduled for Tuesday, August 20th at 1:30 p.m. at the MAG office.

The meeting was adjourned at 3:50 p.m.

Report to MAG Technical committee
Meeting on July 25, 2013 Working Group meeting
By chairman, Jeff Benedict

The meeting was called to order at noon on July 25, 2013.

In attendance: Greg Groneberg (Southwest Asphalt), Jeff Hearne (SRMG), Gordon Tyus (MAG), Syd Anderson (PHX), Bob Herz (MCDOT), John Shi (MCDOT), Bob Draper (Mesa), Scott Thompson (Cardno ATC), and Peter Kanderis (DGS)

Introductions were made and goals were reviewed.

Case 13-09 A discussion on 321's penalty tables took place. The committee reviewed the proposal from Mesa and worked on the various tables. Both Agency and Industry have worked to agree on the version that will be presented to the full MAG committee. The committee further decided to not deal with the "permit" sections at this time. These are poorly written and will need to be addressed next year.

Section 711: Case 13-14 Polymer Modified Asphalt specifications was reviewed. Two small changes were made to include a fiend blended "TR" material and a terminal blended "TR". This case will be voted on by the full committee in August.

Section 325 City of PHX new "rubber overlay" handed out and was discussed. Syd reported that the new boiler plate for rubber projects will be used this year in the City's contracts. He explained that binder targets were 8.0% for collector and major streets and 8.5% for residential pavements.

Section 345: Case 13-19 Adjustments to utility frames and covers- Brian Galimore has provided some recommended changes for this section. The proposed case was reviewed and discussed. It was in agreement to take this to the main committee for further discussion. Bob Herz informed the committee that he had a related case with minor changes to detail 270 water valve covers. It includes removing the chains from the lids and increasing the lid depth to 4" to prevent them from vibrating off of the rings.

A discussion on **Section 309** was held. Comments were submitted and these will be forwarded to Mike Whitman (W.T.I.)

This case was recommended by the committee to send this to the main committee for assigning a case and further discussion.

The meeting was adjourned at 1:25 p.m.

The next (and last) working group meeting will be August 22nd 2013 at noon at the AGC meeting room rather than ARPA's meeting room.

The Arizona General Contractors office is at 1825 W. Adams St., Phoenix.

This is to accommodate the ARPA convention the week of June 17th.

MAG Concrete Working Group

Thursday, July 25, 2013, 1:30 pm at the ARPA Offices

Meeting Notes

Present:

See attached attendance sheet.

Discussion:

1) MAG Section 340 – Curb, Gutter, Sidewalk – Peter Kandaris. Peter provided a handout of various technical methods currently used to determine the level of potential expansion in soils. Discussion on these methods resulted in the consensus that a combination of Plasticity Index and Passing 200 fineness could be easily and quickly evaluated to adequately characterize in-place materials. Peter will revise the current chart and language to recommend appropriate action to be presented to the Standards Committee at the next meeting on August 7th.

2) MAG Section 729 Draft Revision – Jeff Hearne. Additional language from the current ADOT standard was added at the request of Bob Herz from Maricopa County. The final draft is to be submitted to the Standards Committee at the next meeting on August 7th - to eliminate withdrawn ASTM Standards.

3) Revision of Section 324 on Portland Cement Concrete Paving – Jeff Hearne. No discussion on this Section until next year as we need Contractor input regarding current materials and procedures.

Date for Next Meeting:

The **next meeting** is scheduled on **August 22, 2013 @ 1:30 pm** (following the Asphalt and Materials Working Group meetings starting at 12:00). Due to scheduling conflicts at the ARPA offices, this meeting will be moved to the **AGC offices at 1825 W. Adams, Phoenix, Arizona 85007.**

Any and all participants are welcome and encouraged to be involved.

Attendance

MAG Concrete Working Group

Thursday, July 25, 2013

Initials					
GT	Gordon Tyus	MAG	Maricopa Association of Governments	602-254-6300	GTyus@azmag.gov
BH	Bob Herz	McDOT	Maricopa County	602-506-4760	rherz@mail.maricopa.gov
JS	John Shi	McDOT	Maricopa County		johnshi@mail.maricopa.gov
	Jacob Rodriguez	Utility	Salt River Project	602-236-8613	jacob.rodriguez@srpnet.com
SA	Syd Anderson	Municipality	City of Phoenix	602-495-2047	syd.anderson@phoenix.gov
	Don Hansen	Municipality	City of Chandler	480-215-9264	don.hansen@chandleraz.gov
BD	Bob Draper	Municipality	City of Mesa	480-644-3822	bob.draper@mesaaz.gov
	Rob Godwin	Municipality	City of Goodyear	623-693-2457	rob.godwin@goodyearaz.gov
	Troy Tobiasson	Municipality	City of Goodyear	623-882-7979	troy.tobiasson@goodyearaz.gov
	Brian Barnes	Municipality	City of Goodyear	623-882-7501	brian.barnes@goodyearaz.gov
	Scott Zipprich	Municipality	Town of Buckeye	623-547-4661	scott@scoutten.com
	Brandon Forrey	Municipality	City of Peoria	623-773-7201	brandon.forrey@peoriaaz.gov
	Brian Gallimore	Contractor	WSP Inc	623-434-5050	bgallimore@wspinc.net
	Kwigs Bowen	NUCA	Fishel Contracting	480-775-3943	hlbowen@teamfishel.com
JH	Jeff Hearne	Producer	Salt River Materials Group	480-850-5757	jhearne@srmaterials.com
	Mike Kohout	Producer	Cemex	602-220-5631	mkohout@cemexusa.com
	Robert Barkley	Producer	Hanson Aggregates of Arizona	602-685-3436	robert.barkley@hansen.biz
	Tom Romero	Producer	CPC Southwest Materials	520-744-3222	tromero@calportland.com
	Adrian Green	Producer	Vulcan Materials	602-528-8692	greenaj@vmcmail.com
	Tom Villa	Producer	Rock Solid Concrete	602 339-7375	tvilla@rocksolidconcrete.com
	Angelo Trujillo	Producer	BASF Admixtures	480-824-3733	angelotrujillo@cox.net
	Derek Imperial	Producer	BASF Admixtures	480-993-6948	derek.imperial@basf.com
	Greg Dorsch	Producer	BASF Admixtures	480-363-5646	greg.dorsch@basf.com
	Charles Moses	Producer	Jensen Precast	775-287-7275	cmoses@jensenprecast.com
	David Allen	Producer	Boral Materials	602-861-5100	david.allen@boral.com
JB	Jeff Benedict	Producer	Valero Energy Corp	602-989-6121	Jeff.Benedict@valero.com
	Nathan Angel	Producer	Superlite Block	602-818-3937	Nathan.Angel@oldcastle.com
	Charles Taylor	Producer	Oldcastle	770-715-8901	chuck.taylor@oldcastle.com
	Matthew Marcus	Testing Laboratory	Ninyo & Moore	602-243-1600	mmarcus@ninyoandmoore.com
	William Smith	Testing Laboratory	Terracon	480-897-8200	whsmith@terracon.com
ST	Scott Thompson	Testing Laboratory	Cardno ATC	602-290-0840	scott.thompson@cardno.com
	Don Cornelison	Testing Laboratory	Speedie and Associates	602-997-6391	dcornelison@speedie.net
	Greg Creaser	Testing Laboratory	Speedie and Associates	602-447-6391	gcreaser@speddie.net
	Raphael Tixier	Testing Laboratory	Western Technologies Inc.	602-437-3737	r.tixier@wt-us.com
	Mike Whitman	Testing Laboratory	Western Technologies Inc.	602-437-3737	mike.w@wt-us.com
	Phillip Feliz	Testing Laboratory	Western Technologies Inc.	602-437-3737	phil.f@wt-us.com
	Ed Weaver	Consultant	ASU - CIM	480-297-7501	Edwin.Weaver@asu.edu
PK	Peter Kandaris	Consultant	DGA	602-236-8613	pkandaris@dgacon.com
	Jim Willson	Consultant	Consultant	602 290-9585	cementaz@cox.net
	Steve Trussel	ARPA	Arizona Rock Products Association	602-271-0346	steve@azrockproducts.org