March 26, 2014

TO: Members of the MAG Standard Specifications and Details Committee

FROM: Tom Wilhite, City of Tempe, Chair

SUBJECT: MEETING NOTIFICATION AND TRANSMITTAL OF TENTATIVE AGENDA

Wednesday, April 2, 2014 at 1:30 p.m.
MAG Office, Suite 200 (Second Floor), Ironwood Room
302 North 1st Avenue, Phoenix

A meeting of the MAG Specifications and Details Committee has been scheduled for the time and place noted above. Members of the MAG Specifications and Details Committee may attend the meeting either in person, by videoconference or by telephone conference call. If you have any questions regarding the meeting, please contact Committee Chair Tom Wilhite at 480-350-2921 or Gordon Tyus, MAG staff at 602-254-6300.

In 1996, the Regional Council approved a simple majority quorum for all MAG advisory committees. If the MAG Specifications and Details Committee does not meet the quorum requirement, no action can be taken. Attendance at the meeting is strongly encouraged.

Pursuant to Title II of the Americans with Disabilities Act (ADA), MAG does not discriminate on the basis of disability in admissions to or participation in its public meetings. Persons with a disability may request a reasonable accommodation, such as a sign language interpreter, by contacting Gordon Tyus at the MAG office. Requests should be made as early as possible to allow time to arrange the accommodation.

It is requested (not required) that written comments on active cases be prepared in advance for distribution at the meeting.

**MAG Standard Specifications and Details Committee**
**TENTATIVE AGENDA**
**April 2, 2014**

| | **COMMITTEE ACTION REQUESTED** |
|---|---|
| 1. Call to Order and Introductions | |
| 2. Call to the Audience<br>An opportunity is provided to the public to address the MAG Specifications and Details Committee on items that are not on the agenda that are within the jurisdiction of MAG, or non-action agenda items that are on the agenda for discussion or information only. Citizens will be requested not to exceed a three minute time period for their comments. A total of 15 minutes will be provided for the Call to the Audience agenda item, unless the committee requests an exception to this limit. Please note that those wishing to comment on agenda items posted for action will be provided the opportunity at the time the item is heard. | 2. Information. |
| 3. Approval of March 5, 2014, Meeting Minutes | 3. **Review and approve minutes of the March 5, 2014 meeting.** |
| **Carry Forward Cases from 2013** | |
| 4. Case 13-15:<br>Revisions to MAG Sections 101, 601, 603, 615 and 618 for installing rigid and flexible pipe. Update Details 200-1, 200-2. | 4. Information and discussion.<br>Sponsor: Warren White, Chandler, *Updated* |
| 5. Case 13-21:<br>Create a new Section 742 Pre Cast Manhole Bases. Add details for construction and installation. Update existing manhole details. | 5. Information and discussion.<br>Sponsor: Craig Sharp, Buckeye |
| 6. Case 13-22:<br>Update Sections 625 and 775 to remove references to steps and the use of bricks in manholes. | 6. Information and discussion.<br>Sponsor: Craig Sharp, Buckeye |
| **New Cases for 2014** | |
| 7. Case 14-01: Misc. Corrections<br>A. Change "transverse" to "longitudinal" in Section 321.8.2 | 7. Information and discussion.<br>Sponsor: Rod Ramos, Scottsdale |

| | | |
|---|---|---|
| 8. | Case 14-02: Revision to Section 405 Monuments<br>Update specification to match current details and requirements. | 8. Information and discussion.<br>Sponsor: Bob Herz, MCDOT, *Updated* |
| 9. | Case 14-03: Updates to Guardrail Details<br>Revisions to Section 415 and/or inclusion of MCDOT guardrail details. | 9. Information and discussion.<br>Sponsor: Bob Herz, MCDOT |
| 10. | Case 14-04: Revision to Detail 552 Concrete Cut-off Walls.<br>Move cut-off walls away from roadway edge and delete design related notes. | 10. Information and discussion.<br>Sponsor: Bob Herz, MCDOT |
| 11. | Case 14-05: Revision to Section 324 Portland Cement Concrete Pavement<br>Update section for current methods. | 11. Information and discussion.<br>Sponsor: Jeff Hearne, Concrete Working Group<br>*Updated* |
| 12. | Case 14-06: Revisions to Section 718 Preservation Seal for Asphalt Concrete<br>Update specifications for Type 'C' | 12. Information and discussion.<br>Sponsor: Jeff Benedict, Asphalt Working Group |
| 13. | Case 14-07: Revision to Section 735 Reinforced Concrete Pipe and Section 618 Storm Drain Construction<br>Add Elliptical and Arch Reinforced Concrete Pipe | 13. Information and discussion.<br>Sponsor: Bob Herz, MCDOT, *NEW* |
| 14. | Case 14-08: New Section 607: Trenchless Installation of Smooth Wall Jacking Pipe<br>Includes Revisions to Section 618: Storm Drain Construction | 14. Information and discussion.<br>Sponsor: Jim Badowich, Water/Sewer WG, *NEW* |
| 15. | Case 14-09: Revision to Section 726 Concrete Curing Materials<br>Replace discontinued AASHTO references with current ASTM standards. | 15. Information and discussion.<br>Sponsor: Bob Herz, MCDOT, *NEW* |
| 16. | Other New Cases | 16. Information and discussion. |

## General Discussion

| | |
|---|---|
| 17. Working Group Reports | 17. Information and discussion.<br>Water/Sewer Chair: Jim Badowich<br>03/18/14 Meeting<br><br>Asphalt Chair: Jeff Benedict<br>03/20/14 Meeting<br><br>Materials Chair: Brian Gallimore<br>03/20/14 Meeting<br><br>Concrete Chair: Jeff Hearne<br>03/20/14 Meeting<br><br>Outside ROW: Peter Kandaris |
| 18. General Discussion | 18. Information and discussion. |
| 19. Request for Future Agenda Items | 19. Information and discussion. |
| Adjournment | |

# MEETING MINUTES FROM THE
# MARICOPA ASSOCIATION OF GOVERNMENTS
# STANDARD SPECIFICATIONS AND DETAILS COMMITTEE

March 5, 2014

Maricopa Association of Governments Office, Ironwood Room
302 North First Avenue
Phoenix, Arizona

## AGENCY MEMBERS

Jim Badowich, Avondale, Vice Chair
Craig Sharp, Buckeye (proxy)
Warren White, Chandler
Antonio Hernandez, El Mirage
* Wayne Costa, Florence
Tom Condit, Gilbert
Mark Ivanich, Glendale
Bob Herz, MCDOT
* Bob Draper, Mesa
Dan Nissen, Peoria
Syd Anderson, Phoenix (St. Trans.)
Jami Erickson, Phoenix (Water)
* Rodney Ramos, Scottsdale
Jason Mahkovtz, Surprise
Tom Wilhite, Tempe, Chair
Harvey Estrada, Valley Metro (audio)
Gregory Arrington, Youngtown

## ADVISORY MEMBERS

Jeff Benedict, ARPA
Arvid Veidmark, AZUCA
* Mike Sanders, AZUCA
Adrian Green, AGC
* Brian Gallimore, AGC
Jeff Hearne, ARPA
Peter Kandaris, Independent
Paul R. Nebeker, Independent
Jacob Rodriguez, SRP

## MAG ADMINISTRATIVE STAFF

Gordon Tyus

* Members not attending or represented by proxy.

## GUESTS/VISITORS

Arturo Chavarria, Hanson
Mike Hook, ACPA
Dan Shaffer, Surprise
Stew Waller, Rinker

1. Call to Order

   Chair Tom Wilhite called the meeting to order at 1:30 p.m. Jason Mahkovtz announced that he would be leaving Surprise to go to work for the City of Buckeye. He introduced Dan Shaffer, who would be Surprise's new representative on the committee. Chair Wilhite welcomed Mr. Shaffer.

2. Call to the Audience

   Chair Wilhite opened the call to the audience. No members of the audience requested to speak.

3. Approval of Minutes

   The members reviewed the February 5, 2014 meeting minutes. Jason Mahkovtz introduced a motion to accept the minutes as written. Mark Ivanich seconded the motion. A voice vote of all ayes and no nays was recorded.

**Carry Forward 2013 Cases**

4. Case 13-15: Revisions to MAG Sections 601, 603, 615 and 618 for Flexible Pipe. Updates to Details 200-1 and 200-2.

   *Update pipe installation requirements to allow for flexible pipe types.* Warren White said that he was unable to attend the last water/sewer working group so the case was unchanged from last month; however, the updated draft versions of Section 601 and Section 603 were posted on the MAG website so those interested can review and provide comments. The revisions are available here: http://www.azmag.gov/Events/Event.asp?CMSID=5594

   He said that in his discussion with Mr. Tyus, the working group thought that it would be good to provide the committee with a full packet that included the latest versions of all revisions including Sections 615 and 618. Jami Erickson said she was planning to create a case for a new Section 611 that consolidated all of the testing requirements into one section. Mr. White said that the case also included the revisions to the terminology on Details 200-1 and 200-2. Mr. Herz asked if the case could be broken up into smaller pieces. Warren White said he believed the changes were all interdependent and would need to be approved together.

   Arvid Veidmark said he was working on a new Section 607 for boring that would replace the existing subsection 618.4. Jim Badowich said he hoped to pull together everything after the next working group meeting to present to the committee. He also commented that the initial case for Section 611 would not have many changes, but he hoped to revisit, update and add testing procedures to it (such as laser testing) next year. He noted that Rod Godwin of Goodyear was working on updating the water testing in Section 610.

5. <u>Case 13-21: Create a new Section 742 Pre Cast Manhole Bases. Add detail drawings for construction and installation. Update existing manhole details.</u>

*Update specifications and details for pre-cast manhole bases and other corrections.* Craig Sharp handed out the latest version of Section 742, and referred to the revised detail drawings included in the agenda packet. He directed the group to first look at Detail 420-1: Pre-cast Concrete Sewer Manhole. Mr. Sharp explained that the detail consolidated some of the existing details, and asked for comments.

Bob Herz asked if the detail for the cast-in-place base was removed. Mr. Sharp explained that Detail 420-1 still showed the cast-in-place base as the default, but would allow the pre-cast base (Detail 420-2) as an option. Mr. Herz also noticed that the dimension and notes for the adjusting rings changed to include the frame and cover and suggested that there be a minimum dimension. Troy Tobiasson suggested a minimum of 12" was needed. Bob Herz asked if MAG should switch to a minimum 30" manhole. Mark Ivanich said Glendale doesn't install smaller ones since a ladder and worker cannot fit in the smaller sized manholes. Jim Badowich said he is not ready to eliminate the smaller size, which is still used for developments and shallow manholes. Paul Nebeker said he uses a 36" cone for new construction.

Bob Herz asked what seal is used on the adjustment rings. Mr. Sharp said he would add a note. Bob Herz also suggested that Note 9 be deleted since the use of a flat top would be specified by the engineer. He said the type of reinforcement should also be noted. Jeff Hearne said Note 2 is redundant since the use of low alkali cement is already required in Section 725. Mr. Herz said the periods in M.H. should be removed to use the standard abbreviation.

For Detail 420-2, there was a question on whether there was a conflict between specifying MAG "AA" 4000 psi concrete and ASTM C478. Bob Herz asked why clay pipe is specified and if it was clay, he thought it should be vitrified. It was suggested to combine Notes 1 and 13.

Jeff Hearne said Note 5 was not clear as to whether #57 rock had to be compacted, or if just ABC needed to be. Rearranging the order would help clarify the note. There was further discussion on the use of crushed rock or ABC. Paul Nebeker said he would use the #57 rock because trying to compact ABC had safety concerns. Several members agreed that the rock was preferable. Adrian Green said the word "crushed" should be removed because not all #57 rock is crushed, but also screened. Mark Ivanich said the ABC should be compacted using the standard proctor instead of relative density.

Bob Herz asked how you would handle different pipe sizes relative to Note 9. Tom Wilhite asked if a default coating should be specified (in Note 12) to avoid supplements. Mr. Badowich thought it should be per agency requirements since no one method was used by all cities, but if there was a common choice, like spray coating, he could try to word-smith it to include a default. Peter Kandaris said that he thought updates to the sections on painting and coatings were needed—then you could refer to what you wanted. Troy Tobiasson had a question about the ASTM reference for the rubber gasket and said he would review the ASTM specs.

Bob Herz asked why there were such tight tolerances on Section A-A. Craig Sharp said they are manufactured, but would check to see if a greater tolerance was acceptable.

On Detail 421, Bob Herz noticed a typo where a note should be changed from I.C. to I.D. He also asked what adjustment detail should be used. Craig Sharp said that for 99% of the installations the standard Detail 422 would work. If not, an engineer would need to review it. Mr. Herz asked what the dashed lined around the pipe on the detail represented. Mr. Sharp wasn't sure, and thought it could be removed. Arvid Veidmark noticed that the right side keyway was below the left side, and it should be raised so it is even on the drawing.

Mark Ivanich asked if using pre-cast bases required pump around for installation on existing systems, and if so would they really be used. Other responded that they did, but that for new developments they are useful and can be installed more quickly. Mr. Badowich said they are used in California, Flagstaff, and were used at the Phoenix International Raceway in Avondale. He said Buckeye also uses them, and their experience has been useful in developing the case.

On Detail 422 Manhole Adjustment and Cover, Bob Herz noticed that the notes for the spacers and mortar requirements had been removed. Mr. Sharp said that metal spacers are no longer used, but he would check on other requirements. Mr. Herz asked if Note 1 was necessary since the adjustment requirements would be spelled out in the contract documents. Mr. Mahkovtz noticed a typo in the note on the bottom left – it should say "PREPARATION".

There was some discussion about how to show the detail for areas both in pavement and outside of paved areas. Outside areas varied, sometimes the manhole would need to be below grade, such as in shoulders so they are not hit by equipment, but other times they would be above grade, such as in retention basins as explained by Jami Erickson.

Mr. Sharp said he would take all the comments and corrections and make updates to the details.

6. <u>Case 13-22: Update Sections 625 and 775 to remove references to the use of bricks in manholes and remove references to manhole steps.</u>

   Craig Sharp handed out updated specifications for Case 13-22. Jeff Hearne asked if the mortar Section 776 was needed if bricks were no longer used. Bob Herz said mortar could still be used for other applications such as adjustment rings.

   Mr. Hearne said there seemed to be a conflict between the specifications requiring Class A concrete, while some details required Class AA. Mr. Sharp said he would look into it, and asked members to review the specs and send him comments.

**New Cases for 2014**

7. Case 14-01: Miscellaneous Corrections.

   *A. Change "transverse" to "longitudinal" in Section 321.8.2.*
   *B.* No new corrections cases were introduced

8. Case 14-02: Revisions to Section 405 Monuments and Detail 120.

   *Update specifications to match current details and requirements.* Mr. Herz asked if any agencies used the precast monuments mentioned in the first paragraph of Section 405.3. Since no one said they did, he planned to remove the reference. He also asked if anyone was using the Type "C" monument on Detail 120. Craig Sharp said that they did use it once last year, but he personally doesn't like to use it. He said he would check to see if there was any objection to removing it. Mr. Herz asked members to check to see if it also could be removed.

9. Case 14-03: Updates to Guardrail Details.

   *Make revisions to Section 415 and/or include guardrail details in MAG.* Bob Herz said there were no changes since the last meeting.

10. Case 14-04: Revision to Detail 552 Concrete Cut-off Walls.

    *Move cut-off walls away from roadway edge and delete design related notes.* Bob Herz said a new Detail 552 was provided in the packet. It changed the title and incorporated other discussion items from the previous meeting. He asked members to review the detail and give him feedback.

11. Case 14-05: Revisions to Section 324 Portland Cement Concrete Pavement (PCCP).

    *Use compressive rather than tensile strength tests, modernize and reorganize section as needed.* Jeff Hearne said a revised version in the packet updated Section 324.2.1 per the request of Maricopa County. A reference to Class AA concrete was added in the first paragraph and the second paragraph was deleted. The rest of the case remained unchanged.

12. Case 14-06: Revisions to Section 718 Preservative Seal for Asphalt Concrete.

    *Update the specifications for the Type C preservative seal.* Jeff Benedict said he received comments during the last asphalt working group meeting, and will have an updated version next month. He said some of the tests currently listed don't apply to all materials, so the table will need to be updated.

13. Working Group Reports

    Chair Wilhite asked for reports from the working group chairs.

a. **Water/Sewer Issues Working Group**
Jim Badowich said the group met on February 18th and that notes from the meeting were included in the packet. He said the manhole cases were previously covered, but one new issue discussed at the meeting was whether MAG should address vacuum testing. Mr. Tobiasson said he thought it started due to a state statute, which has since been repealed. Mr. Badowich said there were ASTM specifications, but they were for testing before backfill, which seemed impracticable to implement. Jami Erickson said Phoenix does still do the vacuum test after backfilling. Bob Herz suggested keeping it as a supplement since most agencies didn't require the test. Mr. Tobiasson said once the manhole is coated the test was irrelevant.

Mr. Badowich said the group also discussed the problem of not getting adequate flow for flushing from a 2" line, and suggested creating a table for the minimum flushing size based on the velocity needed. Mr. Tobiasson thought AWWA had a table that could be referenced.

Mr. Veidmark said in addition to a new Section 607, he is also working on a new Section 608 for directional boring of dry utilities. Jim Badowich said Avondale uses directional boring for dry utilities such as ITS conduit and street signals.

b. **Asphalt/Materials Working Groups**
Jeff Benedict said the group met on February 20th, and that a copy of the meeting notes was in the packet. He said they were continuing to work on revising Section 321 in regards to work on the permit side, and on specifications for warm mix in Sections 321 and 710.

Jim Badowich asked what he meant by 'permit work.' Mr. Benedict said for private developments they needed to focus on how it is different than other construction and what corrective actions are needed. He wanted to fix any problems when the paving was done, rather than when the development was completed.

Since Brain Gallimore wasn't present, Mr. Benedict said Mr. Gallimore was looking into the issue of street printing, and had a supplement from Gilbert that they were using as an example.

Jeff Benedict said the next asphalt/materials working group meeting is planned for March 20th at the ARPA office at noon.

c. **Concrete Working Group**
The concrete working group followed the Asphalt/Materials working group meeting on February 20th and notes from the meeting were provided. Mr. Hearne said that they are continuing to work on Sections 725 and 324. In addition the group is working with the City of Phoenix revisions to 340 in its supplement.

Mr. Hearne said the next Concrete working group meeting would follow the Asphalt/Materials group on March 20th.

d. **Outside Right-of-Way Working Group**
Peter Kandaris provided a survey about what members thought should be included in the Outside ROW manual and asked them to complete it and send it to him. He asked Mr. Tyus to distribute it online so that it could be filled out electronically and emailed back to him. He noted the list included items to be worked on by other groups, such as pervious concrete, and also specifications already done by SRP and in agency supplements. He planned to continue collaborating via email rather than schedule new meetings.

14. General Discussion

Tom Wilhite said that he would not be able to attend the next meeting, and thanked Jim Badowich in advance for chairing the meeting in his absence.

Gordon Tyus announced that MAG is sponsoring the 2014 Desert Peaks Awards, and said that if any member had a regional project that they were proud of, to consider nominating it for the award. Entry forms were available at the meeting, and electronic forms are available on the MAG website at: http://www.azmag.gov/Projects/Project.asp?CMSID=1083

Bob Herz asked if MAG was interested on specifications regarding substantial versus final completion, since Maricopa County was currently revising their supplement. Jami Erickson said Phoenix is using partial approvals on the light rail projects. Harvey Estrada described how they were used.

Mr. Nebeker said he would like to see changes in MAG for development work because he doesn't get his retention back until final approval, which may be long after his job is completed. Members said these issues are often addressed in project development requirements.

15. Adjournment:

Seeing no further business, a motion to adjourn the meeting was made, seconded and approved. The meeting was adjourned at 3:29 p.m.

# 2014 PROPOSED REVISIONS TO MAG SPECIFICATIONS AND DETAILS



(Updated information can be found on the website: http://www.azmag.gov/Projects/Project.asp?CMSID=1055&CMSID2=5827 )

| CASE | DESCRIPTION | PROPOSED BY | MEMBER | SUBMITTAL DATE Last Revision | VOTE DATE | VOTE | |
|---|---|---|---|---|---|---|---|
| | **CARRY FORWARD CASES FROM 2013** | | | | | | |
| 13-15 | Case 13-15: Revisions to MAG Sections 101, 601, 603, 615 and 618 for installing rigid and flexible pipe. Update Detail 200-1 and 200-2. | Chandler/ Water-Sewer WG | Warren White | 05/01/2013<br>04/02/2014 | | 0<br>0<br>0 | Yes<br>No<br>Abstain |
| 13-21 | Case 13-21: Create a new Section 742 Pre Cast Manhole Bases. Add detail drawings for construction and installation. Update existing manhole details. | Buckeye/ Water-Sewer WG | Craig Sharp | 06/05/2013<br>02/20/2014 | | 0<br>0<br>0 | Yes<br>No<br>Abstain |
| 13-22 | Case 13-22: Update Sections 625 and 775 to remove references to steps and the use of bricks in manholes. | Buckeye/ Water-Sewer WG | Craig Sharp | 06/05/2013<br>08/21/2013 | | 0<br>0<br>0 | Yes<br>No<br>Abstain |
| | **NEW CASES FOR 2014** | | | | | | |
| 14-01 | Case 14-01: Miscellaneous Corrections:<br>A. Change “transverse” to “longitudinal” in Section 321.8.2. | Scottsdale | Rod Ramos | 01/08/2014 | | 0<br>0<br>0 | Yes<br>No<br>Abstain |
| 14-02 | Case 14-02: Revision to Section 405 Monuments. Update specification to match current details and requirements. | MCDOT | Bob Herz | 01/08/2014<br>03/25/2014 | | 0<br>0<br>0 | Yes<br>No<br>Abstain |
| 14-03 | Case 14-03: Updates to Guardrail Details.<br>Revisions to Section 415 and/or inclusion of MCDOT guardrail details. | MCDOT | Bob Herz | 01/08/2014 | | 0<br>0<br>0 | Yes<br>No<br>Abstain |
| 14-04 | Case 14-04: Revision to Detail 552 Concrete Cut-off Walls. Move cut-off walls away from roadway edge and delete design related notes. | MCDOT | Bob Herz | 01/08/2014<br>02/20/2014 | | 0<br>0<br>0 | Yes<br>No<br>Abstain |
| 14-05 | Case 14-05: Revisions to Section 324 Portland Cement Concrete Pavement. | Concrete WG | Jeff Hearne | 02/05/2014<br>03/20/2014 | | 0<br>0<br>0 | Yes<br>No<br>Abstain |
| 14-06 | Case 14-06: Revisions to Section 718 Preservative Seal for Asphalt Concrete. | Asphalt WG | Jeff Benedict | 02/05/2014 | | 0<br>0<br>0 | Yes<br>No<br>Abstain |

# 2014 PROPOSED REVISIONS TO MAG SPECIFICATIONS AND DETAILS



(Updated information can be found on the website: http://www.azmag.gov/Projects/Project.asp?CMSID=1055&CMSID2=5827 )

| CASE | DESCRIPTION | PROPOSED BY | MEMBER | SUBMITTAL DATE Last Revision | VOTE DATE | VOTE | |
|---|---|---|---|---|---|---|---|
| 14-07 | Case 14-07: Revision to Section 735 Reinforced Concrete Pipe and Section 618 Storm Drain Construction. Add Elliptical and Arch Reinforced Concrete Pipe | MCDOT | Bob Herz | 04/02/2014 | | 0<br>0<br>0 | Yes<br>No<br>Abstain |
| 14-08 | Case 14-08: New Section 607: Trenchless Installation of Smooth Wall Jacking Pipe. Includes Revisions to Section 618: Storm Drain Construction. | Water/Sewer WG | Jim Badowich | 04/02/2014 | | 0<br>0<br>0 | Yes<br>No<br>Abstain |
| 14-09 | Case 14-09: Revision to Section 726 Concrete Curing Materials. Replace discontinued AASHTO references with current ASTM standards. | MCDOT | Bob Herz | 04/02/2014 | | 0<br>0<br>0 | Yes<br>No<br>Abstain |
| | | | | | | | |
| | | | | | | | |
| | | | | | | | |
| | | | | | | | |

Chandler • Arizona
*Where Values Make The Difference*

**MEMORANDUM** **Case # 13-15**

**DATE**: April 2nd, 2014

**TO**: MAG Specifications and Details Committee Members

**FROM**: Warren White, City of Chandler Representative

**SUBJECT**: Status Update on Proposed Revisions to MAG Sections 101, 601, 603, 615, 618, and Detail 200

Quick Overview of new terms:

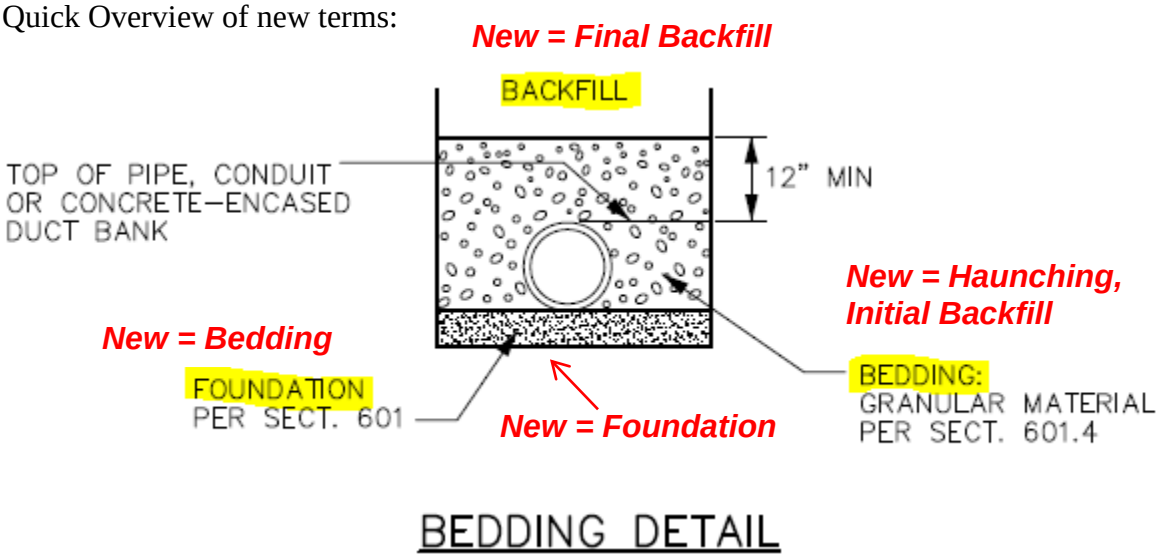


Handouts included with this update:

1) Section 101: Definitions
   - DRAFT changes for new and revised definitions to incorporate ASTM terminology and other related updates.

2) Detail 200-1 and 200-2: Backfill, Pavement and Surface Replacement
   - DRAFT changes related ASTM terminology and complete revamp of Trench Cross-Section Detail on 200-2. (no changes to previous handout other than a better printout)

3) Section 601: Rigid Pipe Trench Excavation, Backfilling and Compaction
   - New title for Section
   - Defining a rigid pipe as reinforced concrete pipe, non-reinforced concrete pipe, cast-in-place concrete pipe, reinforced concrete cylinder pipe, vitrified clay pipe, and iron water pipe.

- ASTM consistent Trench Width Table 601-1.
- ASTM consistent terminology.
- Adding appropriate areas from Section 615/618
- Adding reference to Section 602 for trenchless installations
- Removing water consolidation as a compaction method.
- More discussion and input needed on backfill material.

4) Section 603: Flexible Pipe Trench Excavation, Backfilling and Compaction
   - Revamping existing Section 603: Installation for High Density Polyethylene Pipe
   - New title for Section
   - Defining a flexible pipe as thermoplastic pipe or corrugated metal pipe and arches.
   - Same as 601 above

5) Section 615: Sewer Line Construction
   - Added 615.2 Materials and links to appropriate material Sections, consistent with 618.
   - Revise/Clarify for rigid vs flexible requirements.
   - Migrate appropriate areas to 601/603.
   - Remove testing information and reference NEW Section 611.

6) Section 618: Storm Drain Construction
   - Same as 615
   - Section 618.4 Jacking Pipe section will be looked at for inclusion into 602, then removal.

Case 13-15 revisions 03-19-14

# SECTION 101

## ABBREVIATIONS AND DEFINITIONS

### 101.1 ABBREVIATIONS:

Wherever the following abbreviations are used in these specifications, standard details or on the plans, they are to be constructed the same as the respective expressions represented.

| | |
|---|---|
| AASHTO | American Association of State Highway and Transportation Officials |
| AAN | American Association of Nurserymen |
| AB | Aggregate base |
| Aban | Abandon |
| ABC | Aggregate base course |
| AC | Asphalt cement or concrete |
| ACB | Asphalt concrete base |
| ACI | American Concrete Institute |
| ACP | Asbestos cement pipe |
| ACPA | American Concrete Pipe Association |
| ACWS | Asphalt concrete wearing surface |
| AFRB | Arizona Fire Rating Bureau |
| AGC | Associated General Contractors of America, Inc. |
| Agg | Aggregate |
| ADOT | Arizona Department of Transportation |
| Ahd | Ahead |
| AIA | American Institute of Architects |
| AIEE | American Institute of Electrical Engineers |
| AISC | American Institute of Steel Construction |
| ANSI | American National Standards Institute |
| APA | American Plywood Association |
| Approx | Approximate |
| APWA | American Public Works Association |
| AR | Aged residue |
| ARIZ | Arizona Department of Transportation test method |
| ARS | Arizona Revised Statutes |
| ASCE | American Society of Civil Engineers |
| ASME | American Society of Mechanical Engineers |
| ASTM | American Society for Testing Materials |
| Ave | Avenue |
| AWPA | American Wood Preservers Association |
| AWSC | American Welding Society Code |
| AWWA | American Water Works Association |
| Bbl | Barrel |
| BC | Beginning of curve |
| BCR | Beginning of curb return |
| Beg | Beginning |
| Bk | Book or Back |
| Blvd | Boulevard |
| BM | Bench Mark or Board Measure |
| Brg | Bearing |
| BST | Bituminous Surface Treatment |
| BTB | Bituminous Treated Base |
| BTU | British Thermal Units |
| BVC | Beginning of vertical curve |
| C | Centigrade or Curb |
| CB | Catch Basin |
| CBF&C | Catch basin frame & cover |
| CC or C/C | Center to Center |
| CE | City or County Engineer |
| Cem | Cement |
| CF | Curb face |
| cfs | Cubic Feet per second |
| CIP | Cast Iron pipe |
| CIPP | Cast-in-place concrete pipe |
| CL or C | Centerline |
| Cm | Centimeter |
| CMP | Corrugated metal pipe |
| CO | Clean out |
| Col | Column |
| Conc | Concrete |
| Const | Construct |
| CP | Concrete pipe (non-reinforced) |
| CTB | Cement Treated Base |
| Cu | Cubic |
| Deg | Degree |
| DF | Douglas Fir |
| DG | Decomposed granite |
| Dia | Diameter |
| Dim | Dimension |
| DIP | Ductile Iron Pipe |
| Div | Division |
| Dr | Drive |
| Drwg | Drawing |
| Dwy | Driveway |
| Ea | Each |
| Ease | Easement |
| E | East |
| EC | End of curve |
| ECR | End of curb return |
| El or Elv | Elevation |
| Equa or Eq | Equation |
| EVC | End of vertical curve |
| Ex or Exist | Existing |
| F | Fahrenheit |
| FB | Field book |
| F & C | Frame & cover |
| FH | Fire hydrant |
| FL or F | Floor line or flow line |
| Fl El | Floor Elevation |
| Fnd | Found |
| fps | Feet per second |
| FS | Finished surface |
| FSS | Federal Specifications and Standards |
| Ft | Foot or feet |
| G | Gutter |
| Ga | Gage |
| Galv | Galvanized |
| GL | Ground line |
| Gpm | Gallons per minute |

Formatted: Font: Bold



Revised 2012

| | |
|---|---|
| Gr | Grade |
| H | High or height |
| HC | House connection |
| Hdwl | Headwall |
| Horiz | Horizontal |
| Hwy | Highway |
| ICA | Industrial Commission of Arizona |
| ID | Improvement District or inside diameter |
| IE | Invert Elevation |
| IEEE | Institute of Electrical and Electronic Engineers |
| In | Inch |
| Inv | Invert |
| IP | Iron Pipe |
| IPS | Iron Pipe Size |
| Irrig | Irrigation |
| Jt | Joint |
| JC | Junction Chamber |
| Jct | Junction |
| JS | Junction Structure |
| L | Length |
| Lb | Pound |
| L&T | Lead and tack |
| LD | Local depression |
| LF | Linear Feet |
| LH | Lamp hole |
| Lin | Linear |
| Long | Longitudinal |
| Lt | Left |
| M | Map or maps |
| MAG | Maricopa Association of Governments |
| Max | Maximum |
| MCR | Maricopa County Records |
| Meas | Measured |
| MH | Manhole |
| MHF&C | Manhole frame and cover |
| Min | Minutes or minimum |
| Misc | Miscellaneous |
| ML or M | Monument line |
| mm | Millimeter |
| Mon | Monolithic or monument |
| MTD | Multiple tile duct |
| N | North |
| NBS | National Bureau of Standards |
| NCPI | National Clay Pipe Institute |
| NE | Northeast |
| NEC | National Electric Code |
| NEMA | National Electrical Manufacturer's Association |
| NFPA | National Fire Protection Association |
| NP | Non-plastic |
| NPI | Non pay item |
| NSC | National Safety Council |
| NSF | National Sanitation Foundation |
| NW | Northwest |
| No | Number |
| OC | On center |
| OD | Outside diameter |
| Oz | Ounces |
| P.C | Point of curvature |
| PCC | Point of compound curve or Portland Cement Concrete |
| PI | Point of intersection or plastic index |
| PL | Property line |
| POC | Point of Curve |
| POS | Point of Spiral |
| PP | Power pole |
| ppm | Parts per million |
| PRC | Point of reverse curve |
| Prod | Produced |
| Prop | Proposed or property |
| psi | Pounds per square inch |
| psf | Pounds per square foot |
| PT or POT | Point of Tangent |
| P&TP | Power and telephone pole |
| Pvmt | Pavement |
| Q | Rate of flow |
| R | Radius |
| RC | Reinforced concrete |
| RCP | Reinforced concrete pipe |
| Rd | Road |
| Rdwy | Roadway |
| Reinf | Reinforced, Reinforcing |
| Ret Wall | Retaining Wall |
| RGRCP | Rubber Gasket Reinforced Concrete Pipe |
| rpm | Revolutions Per Minute |
| Rt | Right |
| R/W | Right-of-way |
| S | South or slope |
| SAE | Society of Automotive Engineers |
| San | Sanitary |
| SC | Spiral to Curve |
| SCCP | Steel cylinder concrete pipe |
| SD | Storm drain or Sewer District |
| Sdl | Saddle |
| Sec | Seconds |
| Sect | Section |
| SE | Southeast |
| Sht | Sheet |
| Spec | Specifications |
| SPR | Simplified Practice Recommendation |
| Sp MH | Special manhole |
| Sq Ft Yd | Square Foot, Yard |
| SS | Sanitary sewer |
| St | Street |
| Sta | Station |
| Std | Standard |
| Str gr | Structural grade |
| Struct | Structure or structural |
| SW | Southwest |
| T | Tangent Distance |
| Tel | Telephone |

| | |
|---|---|
| Temp | Temporary |
| TH | Test hole |
| TP | Telephone pole |
| Tr | Tract |
| Trans | Transition |
| TS | Traffic signal or Tangent to spiral |
| TSC | Traffic signal conduit |
| Typ | Typical |
| UL | Underwriters' Laboratories Inc. |
| USC & GS | United States Coast and Geodetic Survey |
| USGS | United States Geological Survey |
| V | Velocity of flow |
| VC | Vertical curve |
| VCP | Vitrified clay pipe |
| Vert | Vertical |
| W | West or width |
| WI | Wrought iron |
| WS | Wearing surface |
| Wt | Weight |
| Yd | Yard |
| ‘ | feet or minutes |
| “ | inches or seconds |
| ° | degrees |
| % | percent |
| # | number or pound |
| @ | at |
| / | per |
| = | equals |

## SECTION 101

### 101.2 DEFINITIONS AND TERMS:

Whenever in these specifications or in other contract documents the following terms or pronouns in place of them are used, the intent and meaning shall be interpreted as follows:

**Addendum:** A supplement to any of the Contract Documents issued, in writing, after advertisement of but prior to the opening of bids for a contract.

**Advertisement**: The public announcement, as required by law, inviting bids for work to be performed or materials to be furnished.

**Agency:** The governmental agency for which the construction is being done, either by permit or contract.

**Architect:** The individual or firm who has accomplished the architectural services for the project, including his representatives.

**Arizona Test Method:** Arizona Department of Transportation Materials Testing Manual test method.

**Award:** The formal action of the governing body is accepting a proposal.

**Backfill:** Material placed in an excavated space to fill such space. For trenches, see definitions for Initial Backfill and Final Backfill. ~~this space will be the area from 1 foot above the top of the pipe or conduit to the existing or proposed finished grade of pavement.~~

**Base Course:** The upper course of the granular base of a pavement or the lower course of an asphalt concrete pavement structure.

**Bedding:** A backfill material layer placed on top of the pipe foundation to the bottom of the pipe, typically 4 – 6 inches in height. The bedding establishes line and grade to provide firm, but not hard, pipe support.
~~**Is the material placed in the area from the bottom of the trench to 1 foot above the top of the pipe or conduit.**~~

**Bidder:** Any qualified individual, firm, partnership, corporation or combination thereof, acting directly or through a duly authorized representative who legally submits a proposal for the advertised work.

**Board of Supervisors:** The Maricopa County Board of Supervisors acting under the authority of the laws of the State of Arizona.
[Type a quote from the document or the summary of an interesting point. You can position the text box anywhere in the document. Use the Drawing Tools tab to change the formatting of the pull quote text box.]

**Bond Issue Project:** A project financed from bonds issued by the City or County pledging credit or a revenue resource.

**Bridge:** A structure, including supports, erected over a depression or an obstruction, as water, highway, or railway, and having a track or passageway for carrying traffic or other moving loads and having a length measured along the center of roadway of more than 20 feet between undercopings of abutments or extreme ends of openings for multiple boxes.

(Length) The length of a bridge structure is the over-all length measured along the line of survey stationing back to back of backwalls of abutments, if present, otherwise end to end of the bridge floor; but in no case less than the total clear opening of the structure.

(Roadway Width) The clear width measured at right angles to the longitudinal centerline of the bridge between the bottom or curbs or guard timbers or in the case of multiple heights of curbs, between the bottoms of the lower risers.

**Budget Project:** A project financed by funds from General Tax levies and shared revenue funds set aside in the annual budget adopted by the Council or Board of Supervisors.

**Formatted:** Font: Bold
**Formatted:** Indent: Left: 0", First line: 0"
**Formatted:** Font: Bold
**Formatted:** Indent: Left: 0", First line: 0"
**Formatted:** Indent: Left: 0", First line: 0"
**Formatted:** Font: Bold

## SECTION 101

**Building:** Any structure built for the support, shelter, or enclosure of persons, animals, chattel or movable property.

**Building Code:** A regulation adopted by the governing body establishing minimum standards of construction for the protection of the public health, safety, and welfare in terms of measured performance rather than in terms of rigid specification of materials and methods.

**Calendar Day:** Every day shown on the calendar.

Formatted: Left

**Call for Bids:** The standard forms inviting proposals or bids.

**"Careful and prudent manner":** means conducting excavation in such a way that when it approaches within twenty-four inches of the underground facility located and marked by the owner or operator, by stakes, paint or in some customary manner, the exact location is manually determined, and the uncovered facility is supported and protected.

**Change Order:** A written order issued by the Engineer to the Contractor to make changes in the work or to perform extra work, and setting forth conditions for payment and/or adjustment in time of completion.

**City:** A municipal corporation, organized and existing under and by virtue of the laws of the State of Arizona.

**City/County Clerk:** The duly authorized person who performs the duties of clerk for the Contracting Agency.

**Completion Time:** The number of calendar days for completion of an act, including authorized time extensions. In case a calendar date of completion is shown in the proposal in lieu of the number of calendar days, the contract shall be completed by that date. The time within which an act is to be done shall be computed by excluding the first and including the last day; and if the last day be Sunday or a legal holiday, that shall be excluded.

**Conflicting Utility:** An existing utility, shown or not shown on the plans is conflicting when any part of the utility falls within the dimensions of the new installation, such that it would be in physical contact with the new installation.

**Construction Project:** The erection, installation, remodeling, alteration, of durable facilities upon, under, or over the ground. This shall include, but is not limited to buildings, roadways and utility pipes, lines, poles or other structures.

**Contingent Bid Item:** This is a minor bid item which is likely, but not certain, to occur during the course of work. If the Engineer determines that this work is required, the Contractor will accomplish the work and payment will be made based on the contingent unit bid price included in the proposal. Since the quantity listed in the proposal is primarily for bid comparison, the amount of work required by the Engineer may vary materially from this.

**Contract:** The written instrument executed by the Contractor and the Contracting Agency by which the Contractor is bound to furnish all labor, equipment, and materials and to perform the work specified, and by which the Contracting Agency is obligated to compensate the Contractor therefore at the prices set forth therein. The Contract Documents are herewith by reference made a part of the contract as if fully set forth therein.

**Contract Documents:** All the integral documents of the contract, including but not limited to, Call for Bids, Plans, Standard Specifications and Details, Special Provisions, Proposal, Addenda, Performance Bond, Payment Bond, Certificates of Insurance, Ordinance, Contract, and Change Orders.

**Contracting Agency:** The legal entity that has contracted for the performance of the work or for whom the work is being performed.

**Contractor:** The individual, firm, partnership, corporation or combination thereof entering into a contract with the Contracting Agency to perform the advertised work.

**Council:** The City Council which by law constitutes the Legislative Department of the City.

**County:** Maricopa County, organized and existing under and by virtue of the laws of the State of Arizona.

**Culvert:** Any structure not classified as a bridge, which provides an opening under or adjacent to the roadway.

**Days:** Unless otherwise designated, days will be understood to mean calendar days.

**Emergency:** Unforeseen occurrences and combinations of circumstances involving the public welfare or the protection of work already done under the Contract Documents, or which endanger life or property and call for immediate action or remedy.

**Engineer:** The person, appointed as City or County Engineer by the Council or the Board of Supervisors, acting directly or through his duly authorized representative.

**Equipment:** (Construction) — All machinery and equipment, together with the necessary supplies for upkeep and maintenance, and also tools and apparatus necessary for the proper construction and acceptable completion of work. (Installed) — All material or articles used in equipping a facility as furnishings or apparatus to fulfill a functional design.

**Extra Work:** An item of work not provided for in the contract as awarded but found essential to the satisfactory completion of the contract within its intended scope.

**Final Backfill:** The area of a pipe trench backfill envelope defined as the area above initial backfill to the top of the trench or to the bottom of the road base material. Final backfill is typically compacted native material.

**Flooding:** Flooding will consist of the inundation of the entire lift with water, puddle with poles or bars to insure saturation of the entire lift.

**Force Account Work:** Work done by personnel of the Contracting Agency as in-house work.

**Foundation:** For buildings or structures, this will be the substructure. For a pipe trench the foundation is defined as the native or prepared material upon which the bedding material is placed.~~For pipe this will be the native material or prepared material on which the pipe rests; normally, this is the bottom grade line of the trench.~~

**Full Depth Pavement:** An asphalt concrete pavement structure in which the granular base and subbase are replaced by proportionate thicknesses of asphalt concrete.

**Haunching:** The area of a pipe trench backfill envelope that provides the majority of resistance against soil and traffic loadings. The haunching area is defined as the zone between the bottom of the pipe and the centerline, or springline, of the pipe.

**Formatted:** Font: Bold

**Improvement District Project:** A project financed by assessments against the property included in a special assessment district authorized under, or implemented by an act of the legislature of the State and/or a procedural ordinance of the City or County.

**Initial Backfill:** The area of a pipe trench backfill envelope defined as the area between the springline and a minimum of 12 inches above the crown of the pipe.

**Inspector:** The Engineer's authorized representative assigned to make detailed inspections of contract performance.

~~**Jetting:** Jetting is the densification of material, using a continuous supply of water, under pressure, transmitted to the material through a rigid pipe of sufficient length to reach the bottom of the lift being densified. In all cases, the entire lift will be completely saturated working from the top to the bottom.~~

**Laboratory:** The established materials testing laboratory of the Contracting Agency's Engineering Department, or other laboratories acceptable to and/or authorized by the Engineer to test materials and work involved in the Contract.

**Major Item:** A major item shall be the total of any item of work and/or materials specified in the bid schedule that exceeds the amount established in Table 109-1.

**Materials:** Any substance specified in the project, equipment and other material used or consumed in the performance of the work.

**Median:** The portion of a divided highway separating the roadways used by traffic going in opposite directions.

**Native Material:** A sound earthen material free from broken concrete, broken pavement, wood or other deleterious material with no piece larger than 4 inches.

**Non Pay Item:** An item of work for which no separate payment will be made under the proposal, but which must be included as an incidental cost for payment on an associated item included in the proposal.

**Notice of Award:** A letter from the City or County Clerk advising the Contractor that he is the successful bidder and the Council or Board of Supervisors has accepted his proposal.

**Notice to Proceed:** A directive issued by the Engineer, authorizing the Contractor to start the work or improvements required in the Contract.

**Obligee:** One to whom another is obligated.

**Open Trench:** The excavated area shall be considered as open trench until all the aggregate base course for pavement replacement has been placed and compacted or, if outside of a pavement area, until the excavated area is brought to finish grade or natural grade.

**Owner:** The City or County, acting through its legally constituted officials, officers or employees.

**Pavement:** Any surfacing of streets, alleys, sidewalks, courts, driveways, etc., consisting of mineral aggregate bound into a rigid or semi-rigid mass by a suitable binder such as, but not limited to, Portland cement or asphalt cement.

**Pavement Structure:** The combination of subbase, base course, and surface course placed on a subgrade to support the traffic load and distribute it to the roadbed.

**Pay Item:** A detail of work for which separate payments are to be made under the Contract, as specified in the proposal.

**Payment Bond:** The security provided by the Contractor solely for the protection of claimants, supplying labor and materials to the Contractor or his Subcontractors.

**Performance Bond:** The security provided by the Contractor solely for the protection of the Contracting Agency and conditioned upon the faithful performance of the contract in accordance with the plans, specifications and conditions thereof.

**Permit:** The license to do construction in public rights-of-way and/or easements; issued by an Agency to a Contractor working for another party.

**Pipe Embedment Zone:** The area of a pipe trench backfill envelope, consisting of the bedding, haunching, and initial backfill areas.

**Plans:** All approved drawings or reproductions thereof pertaining to the work and details therefore, which are made a part of the Contract Documents.

**Plant:** The Contractor's and/or subcontractor's facilities, including but not limited to small tools and mobile equipment, located on and/or offsite, necessary for preparation of materials and prosecution of work for the project.

**Principal:** The individual, firm or corporation primarily liable on an obligation, as distinguished from a surety.

**Formatted:** Font: Bold

**Formatted:** Indent: Left: 0", First line: 0"

**Formatted:** Font: Bold

**Professional Engineer:** A person who has a current engineering registration granted by the Arizona State Board of Technical Registration in one or more branches of engineering recognized by the board.

**Profile Grade:** The trace of a vertical plan intersecting the top surface of the proposed wearing surface, usually along the longitudinal centerline of the roadbed. Profile grade means either elevation or gradient of such trace according to the context.

**Project:** A specific coordinated construction or similar undertaking identified by a single project number and bid and awarded as one contract. On occasion two or more projects may be bid and awarded as a single contract.

**Proposal:** The offer of a bidder on the prescribed form, to perform the work and to furnish the labor and materials at the prices quoted.

**Proposal Form:** The approved form on which the Contracting Agency requires bids to be prepared and submitted for the work.

**Proposal Guarantee:** The security furnished with a bid to guarantee that the bidder will enter into the contract if his bid is accepted.

**Proposal Pamphlet:** The book or pamphlet pertaining to a specific project, containing proposal forms, special provisions and other information necessary for and pertinent to the preparation of the proposal or bid.

**Referred Documents:** On all work authorized by the Contracting Agency, any referenced documents in the specification, i.e., Bulletins, Standards, Rules, Methods of Analysis or test. Codes and Specifications of other Agencies, Engineering Societies or Industrial Associations, refer to the Latest Edition thereof, including Amendments, which are in effect and published at the time of Advertising for Bids or the issuing of a permit for the work, unless otherwise stated.

**Right-of-way:** A general term denoting land, property, or interest therein, usually in a strip acquired for or devoted to a street, highway, or other public improvement.

**Road:** A general term denoting a public way for purposes of vehicular travel, including the entire area within the right-of-way.

**Roadside:** A general term denoting the area adjoining the outer edge of the roadway. Extensive areas between the roadways of a divided highway may also be considered roadside.

**Roadside Development:** Those items necessary to the complete roadway which provide for the preservation of landscape materials and features; the rehabilitation and protection against erosion of all areas disturbed by construction through seeding, sodding, mulching and the placing of other ground covers; such suitable planting and other improvements as may increase the effectiveness and enhance the appearance of the roadway.

**Roadway:** The portion of the right-of-way intended primarily for vehicular traffic, and including all appurtenant structures and other features necessary for proper drainage and protection. Where curbs exist, it is that portion of roadway between the faces of the curbs.

**Sewers:** Conduits and related appurtenances employed to collect and carry off water and waste matter to a suitable point of final discharge.

**Shop Drawings:** Drawings or reproduction of drawings, detailing; fabrication and erection of structural elements, falsework and forming for structures, fabrication of reinforcing steel, installed equipment and installation of systems, or any other supplementary plans or similar data, which the Contractor is required to submit for approval.

**Shoulder:** The portion of the roadway contiguous with the traveled way for accommodation of stopped vehicles, for emergency use, and for lateral support of base and surface courses.

**Sidewalk:** That portion of the roadway primarily constructed for the use of pedestrians.

**Special Provisions:** The special conditions, requirements, additions, and/or revisions to the Standard Specifications, applicable to the work, to cover conditions or requirements peculiar to the project under consideration.

**Specifications:** The descriptions, directions, provisions, and requirement for performing the work as contained in the Contract Documents.

**Springline:** The horizontal centerline of a pipe in a pipe trench backfill envelope. The springline separates the haunching area from the initial backfill in the pipe embedment zone.

**Formatted:** Font: Bold

**Standard Details:** Uniform detail drawings of structures or devices adopted as Standard Details by the Engineer.

**Standard Specifications:** Uniform general specifications adopted as Standard Specifications by the Engineer.

**Storm Drain:** Any conduit and appurtenance intended for the reception and transfer of storm water.

**Street:** Streets, avenues, alleys, highways, crossings, lanes, intersections, courts, places, and grounds now open or dedicated or hereafter opened or dedicated to public use and public ways.

**Structures:** Bridges, culverts, catch basins, drop inlets, retaining walls, cribbing, manholes, end walls, sewers, service pipes underdrains foundation drains, fences, swimming pools, and other features which may be encountered in the work and not otherwise classed herein.

**Subbase:** The lower course of the base of a roadway, immediately above the subgrade.

**Subcontractors:** Those having direct contracts with the Contractor and those who furnish material worked into a special design according to the Plans and Specifications for the work, but not those who merely furnish material not so worked.

**Subgrade:** The supporting structures on which the pavement and its special undercourses rest.

**Substructure:** All of that part of the structure or building below the bearings of simple and continuous spans, skewbacks of arches and tops of footings of rigid frames, together with the backwalls, wingwalls and wing protection railings.

**Superintendent:** The Contractor's authorized representative in responsible charge of the work.

**Superintendent of Streets:** The person duly appointed by the Council of the Contracting Agency, as provided by the Arizona Revised Statutes.

**Superstructure:** The entire structure or building except the substructure.

**Supplemental Specifications:** Additions and revisions to the Standard Specifications that are adopted subsequent to issuance of the printed book.

**Supplementary General Conditions:** Requirements, or revisions, to the Standard General Conditions, applicable to the work, and to cover conditions or requirements peculiar to the project under consideration.

**Surety:** The individual, firm or corporation, bound with and for the Contractor for the acceptable performance, execution, and completion of the work, and for the satisfaction of all obligations incurred.

**Surface Course:** The finished or wearing course of an asphalt concrete pavement structure.

**Title or Headings:** The titles or headings of the sections and subsections herein are intended for convenience of reference and shall not be considered as having any bearing on their interpretation.

**Township, City, Town or District:** A subdivision of the County used to designate or identify the location of the proposed work.

**Traveled Way:** The portion of the roadway for the movement of vehicles, exclusive of shoulders and auxiliary lanes.

**"Underground Facility":** means any item which shall be buried or placed below ground for use in connection with the storage or conveyance of water, sewage, electronic, telephone or telegraphic communications, electric energy, oil, gas or other substances, and shall include, but not be limited to pipes, sewers, conduits, cables, valves, lines, wires, manholes, attachments and those portions of poles and their attachments below ground.

**Utility:** Pipe lines, conduits, ducts, transmission lines, overhead or underground wires, railroads, storm drains, sanitary sewers, irrigation facilities, street lighting, traffic signals, and fire alarm systems, and appurtenances of public utilities and those of private industry, businesses or individuals solely for their own use or use of their customers which are operated or maintained in, on, under, over or across public right-of-way or public or private easement.

**Waterworks (Water Supply System):** The reservoirs, pipe lines, wells, pumping equipment, purification works, mains, service pipes, and all related appliances and appurtenances utilized in the procurement, transportation and delivery of an adequate, safe, and palatable water supply for the Contracting Agency.

**Work:** Any or all of the improvements mentioned and authorized to be made, and the construction, demolition, reconstruction, and repair of all or any portion of such improvements, and all labor, services, incidental expenses, and material necessary or incidental thereto.

**Working Day:** A calendar day, exclusive of Saturdays, Sundays, and Contracting Agency recognized legal holidays, on which weather and other conditions not under the control of the Contractor will permit construction operations to proceed for the major part of the day with the normal working force engaged in performing the controlling item or items of work which would be in progress at that time.

**101.3** In order to avoid cumbersome and confusing repetition of expressions in these specifications, it is provided that whenever anything is, or is to be, done, if, as, or, when, or where contemplated required, determined, directed, specified, authorized, ordered, given, designated, indicated, considered necessary, deemed necessary, permitted, reserved, suspended, established, approval, approved, disapproved, acceptable, unacceptable, suitable, accepted, satisfactory, unsatisfactory, sufficient, insufficient, rejected, or condemned, it shall be understood as if the expression were followed by the words by the Engineer or to the Engineer.

***- End of Section -***

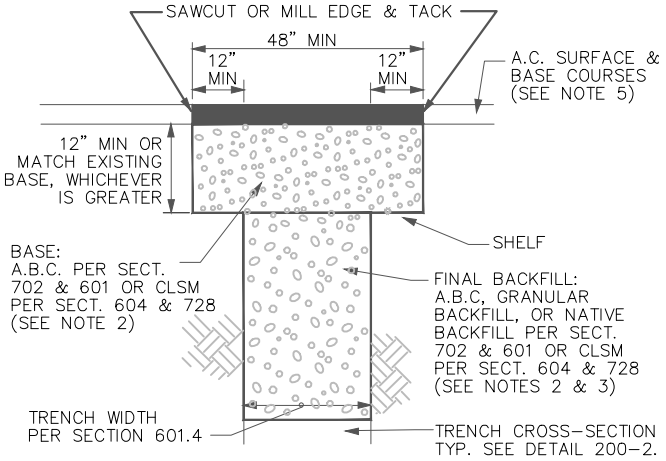


"T TOP" TRENCH REPAIR

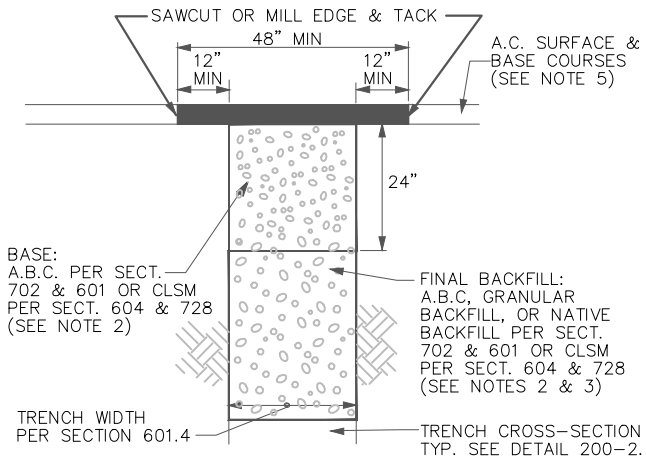


TYPE "A" TRENCH REPAIR

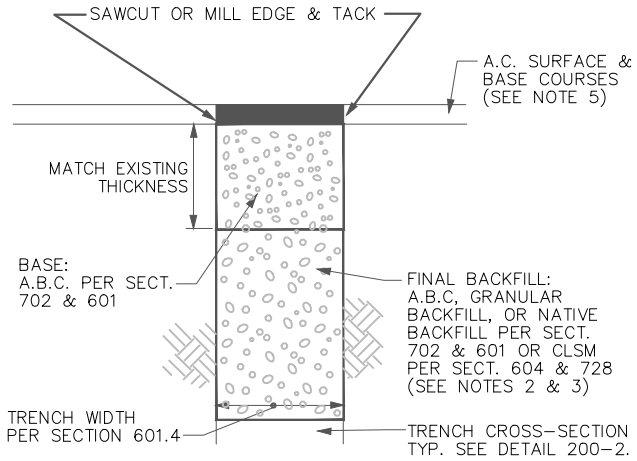


TYPE "B" TRENCH REPAIR

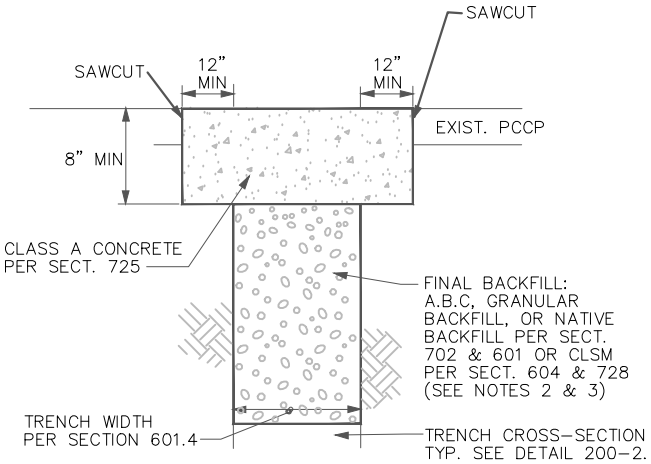


TYPE "C" TRENCH REPAIR

(TRENCH IN PORTLAND CEMENT CONCRETE PAVEMENT)

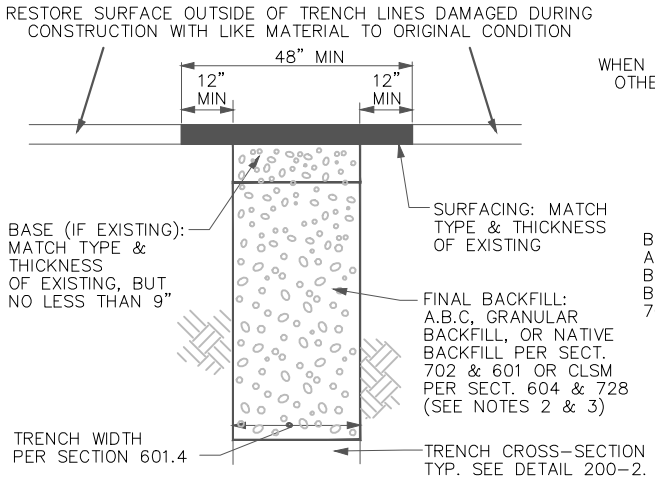


TYPE "D" TRENCH REPAIR

(TRENCH NOT UNDER CONCRETE OR ASPHALT PAVEMENT)

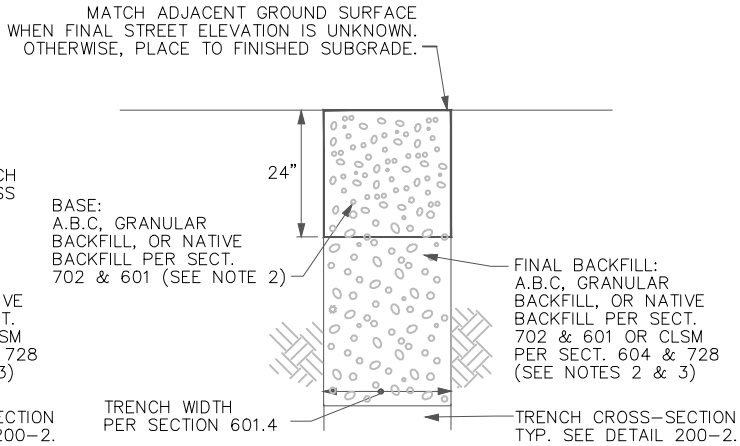


TYPE "E" TRENCH REPAIR

(TRENCH IN FUTURE ROADWAY PRISM OR ALLEY)

## NOTES:

1. PAVEMENT MATCHING AND SURFACE REPLACEMENT SHALL BE IN ACCORDANCE WITH SECTION 336.
2. TYPE OF BACKFILL AND BASE (IF APPLICABLE) SHALL BE AS NOTED HEREIN UNLESS OTHERWISE SPECIFIED IN CONTRACT DOCUMENTS. IF NOT SPECIFIED, CLSM SHALL BE 1/2-SACK PER SECTIONS 604 AND 728.
3. TRENCHES LESS THAN 24" WIDE SHALL BE BACKFILLED FROM TOP OF BEDDING TO BOTTOM OF SURFACING MATERIALS WITH 1/2-SACK CLSM PER SECTIONS 604 AND 728.
4. BASE, FINAL BACKFILL AND PIPE EMBEDMENT ZONE. COMPACTION REQUIREMENTS SHALL BE IN ACCORDANCE WITH SECTION 601 OR SECTION 603.
5. ASPHALT CONCRETE SURFACE AND BASE COURSES SHALL COMPLY WITH SECTION 336.2.4.1 UNLESS OTHERWISE SPECIFIED IN CONTRACT DOCUMENTS.
6. USE TYPE "A" FOR LONGITUDINAL TRENCH REPAIR AND USE "T-TOP" FOR TRANSVERSE TRENCH REPAIR (SEE DETAIL 200-2) UNLESS OTHERWISE SPECIFIED IN CONTRACT DOCUMENTS. TYPE "B" TRENCH REPAIR MAY BE USED FOR TRANSVERSE TRENCH REPAIR IF SPECIFIED BY THE AGENCY.
7. PROVIDE MINIMUM 12" WIDE SHELF AS SHOWN IN "T-TOP" TRENCH REPAIR AT ENDS OF TYPE "A" TRENCH REPAIR EXCEPT WHERE EDGE ABUTS EXISTING CONCRETE.
8. USE "T-TOP" PAVEMENT REPLACEMENT WHERE A TRENCH IS NOT PARALLEL TO A STREET OR GOES THROUGH AN INTERSECTION.
9. SEE DETAIL 200-2 FOR REMNANT PAVEMENT REMOVAL REQUIREMENTS.
10. EXPOSED COPPER OR POLYETHYLENE WATER PIPE UP TO 2" IN DIAMETER IN TRENCHES TO BE BACKFILLED WITH CLSM SHALL BE WRAPPED WITH MINIMUM 3/4" THICK PREFORMED PIPE-COVERING FOAM INSULATION BEFORE PLACING CLSM.

| DETAIL NO. | | STANDARD DETAIL | | PROPOSED | DETAIL NO. |
|---|---|---|---|---|---|
| 200-1 | MARICOPA ASSOCIATION of GOVERNMENTS | ENGLISH | BACKFILL, PAVEMENT AND SURFACE REPLACEMENT | 01-01-2015 | 200-1 |

CASE 13-15 DRAFT 3-19-2014

## LONGITUDINAL TRENCH

(TRENCH IN PAVEMENT PARALLEL TO TRAFFIC)

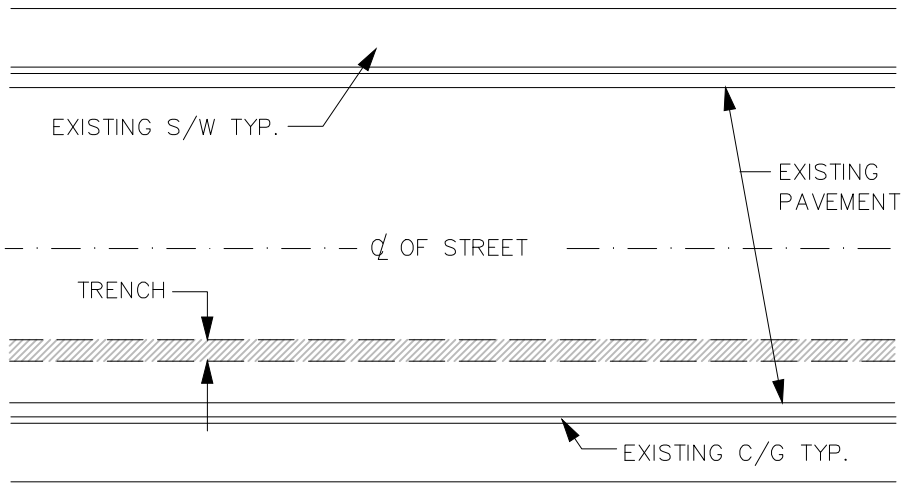


## TRANSVERSE TRENCH

(TRENCH IN PAVEMENT NOT PARALLEL TO TRAFFIC)

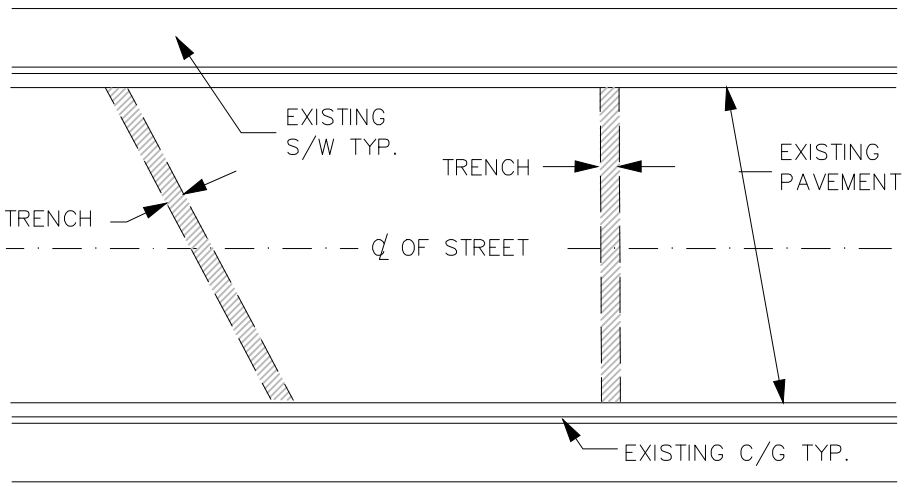


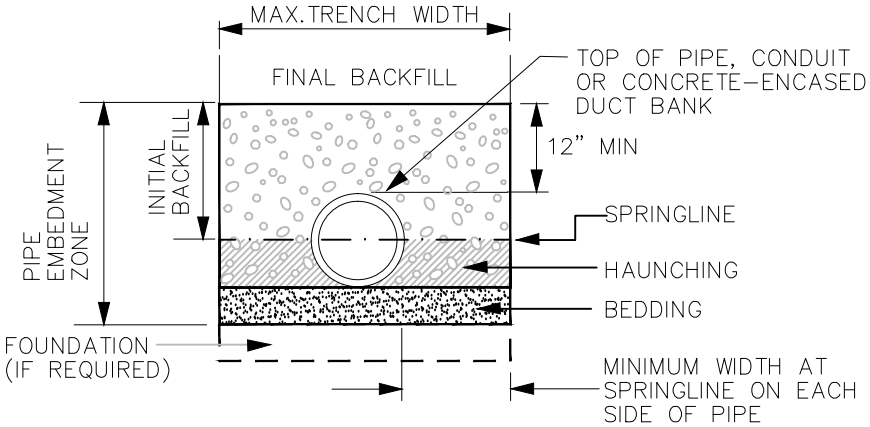


## TRENCH CROSS-SECTION DETAIL

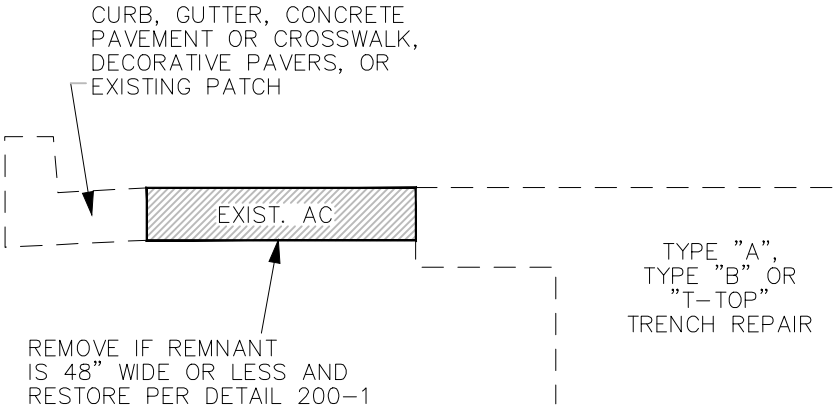


## REMNANT PAVEMENT REMOVAL

## NOTES:

1. SEE SECTION 601 FOR RIGID PIPE INSTALLATION AND 603 FOR FLEXIBLE PIPE INSTALLATION.
2. SEE MAG DETAIL 200-1 FOR DETAILED TRENCH REPAIR REQUIREMENTS FOR TRENCH TYPES NOTED HEREIN.
3. SEE MAG DETAIL 211 FOR REQUIREMENTS REGARDING THE USE OF PLATING TRANSVERSE TRENCHES. USE OF STEEL PLATES SHALL NOT EXCEED 72 HOURS AFTER COMPLETION OF BACKFILL AND PRIOR TO FINAL PATCHING.

| DETAIL NO. | | STANDARD DETAIL | | PROPOSED | DETAIL NO. |
|---|---|---|---|---|---|
| 200-2 | MARICOPA ASSOCIATION of GOVERNMENTS | ENGLISH | BACKFILL, PAVEMENT AND SURFACE REPLACEMENT | 01-01-2015 | 200-2 |

CASE 13-15 DRAFT 3-19-2014

Case 13-15 revisions 03-19-14

**SECTION 601**

**RIGID PIPE TRENCH EXCAVATION, BACKFILLING AND COMPACTION**

Formatted: Font: Bold

**601.1 DESCRIPTION:**

The work covered by this specification consists of furnishing all plant, labor, equipment, appliances and materials, and performing all operations in connection with the trench excavation, ~~and~~ backfilling and compaction ~~of trenches~~ for a single rigid pipe installation in accordance with the plans and special provisions.~~, except for the installation of high-density polyethylene pipe (HDPE).~~ Pipe materials that are considered to be rigid include reinforced concrete pipe, non-reinforced concrete pipe, cast-in-place concrete pipe, reinforced concrete cylinder pipe, vitrified clay pipe and ductile iron pipe. All other pipe materials are considered flexible pipe. See Section 603 for trench excavation, backfilling, and compaction of flexible pipe.

The Trench Cross-Section Detail shown on Detail 200-2 illustrates the terminology used in this specification.

See Section 615 for sewer line construction procedures.

See Section 618 for storm drain construction procedures.
~~See Section 603 for trench excavation, backfilling, and compaction of HDPE pipe.~~

Excavation for appurtenance structures, such as manholes, inlets, transition structures, junction structures, vaults, valve boxes, catch basins, etc., shall be deemed to be in the category of trench excavation.

See Section 602 for trenchless installations.

**601.2 EXCAVATION:**

**601.2.1 General:** The Contractor shall perform all excavation of every description and of whatever substances encountered, to the depths indicated on the plans, and including excavation ordered by the Engineer of compacted backfill for the purpose of making density tests on any portion of the backfill.

All excavation shall be open cut unless otherwise shown on the plans or approved by the Engineer.

**601.2.2 Trench Widths:** Trenches for other than cast-in-place concrete pipe shall conform to the dimensions in Table 601-1, unless otherwise specified in the special provisions, indicated on the plans, and/or approved by the Engineer.

| ~~TABLE 601-1~~ | | |
|---|---|---|
| ~~TRENCH WIDTHS~~ | | |
| ~~Size Of Pipe (I.D.)~~ | ~~Maximum Width At Top Of Pipe Greater Than O.D. Of Barrel~~ | ~~Minimum Width At Springline Each Side of Pipe (1)~~ |
| ~~Less than 18 inches~~ | ~~16 inches~~ | ~~6 inches~~ |
| ~~18 inches to 24 inches inclusive~~ | ~~19 inches~~ | ~~7 ½ inches~~ |
| ~~27 inches to 39 inches inclusive~~ | ~~22 inches~~ | ~~9 inches~~ |
| ~~42 inches to 60 inches inclusive~~ | ~~½ O.D.~~ | ~~12 inches~~ |
| ~~Over 60 inches~~ | ~~36 inches~~ | ~~12 inches~~ |

| Table 601-1 | | |
|---|---|---|
| **Size of Pipe (Nom. Dia.)** | **Maximum Width At Top Of Pipe Greater Than O.D. Of Barrel** | **Minimum Width At Springline Each Side of Pipe (1)** |
| Less than 18 inches | 16 inches | 6 inches |
| 18 inches to 24 inches inclusive | 19 inches | 7.5 inches |
| 27 inches to 39 inches inclusive | 22 inches | 9 inches |
| 42 inches to 60 inches inclusive | 30 inches | 12 inches |
| 66 inches to 78 inches inclusive | 42 inches | 15 inches |
| 84 inches to 96 inches inclusive | 50 inches | 19 inches |

| | | |
|---|---|---|
| 102 inches to 120 inches inclusive | 60 inches | 24 inches |

Comment [WW1]: ASTM trench widths.

(1) When the specified compaction cannot be obtained in the ~~haunch area and/or bedding~~ pipe embedment zone, the Contractor shall make necessary changes in his methods and/or equipment to obtain the desired results. In some instances, the Minimum Width at Springline shall be adjusted wider to assist the Contractor in obtaining the compaction. The Engineer must be satisfied with the Contractor's compaction effort, concur with the change and approve the revised distance. There shall be no additional cost to the Agency for the extra trench width.

For multiple pipe installations in a single trench, the Engineer shall provide details on the plans or in the Special/Technical Provisions as to the layout, pipe configuration, distances between pipes and trench walls, the type of backfill~~, bedding~~ and bedding ~~foundation~~ materials, etc.

The width of the trench shall not be greater than the maximum indicated in Table 601-1, at and below the level of the top of the pipe. The width of the trench above that level may be made as wide as necessary for sheeting and bracing, and for proper installation of the work.

If the maximum trench width as specified in Table 601-1 is exceeded at the top of the pipe the Contractor shall provide, at no additional cost to the Contracting Agency, the necessary additional load bearing capacity by means of ~~bedding~~initial backfill, having a higher bedding factor than that specified, higher strength pipe, a concrete cradle, cap or encasement, or by other means approved in writing by the Engineer.

Comment [WW2]: Discuss

**601.2.3 Trench Grade:** Alignment and elevation stakes shall be furnished the Contractor at set intervals and agreed upon offsets. On water main projects, elevation stakes will be furnished only when deemed necessary by

the Engineer. In all cases where elevation stakes are furnished, the Engineer will also furnish the Contractor with cut sheets.

For all pipe 12 inches or greater in diameter, the Contractor shall excavate for and provide an initial granular bedding at least 4 inches thick or 1/12 the O.D. of the pipe whichever is greater. This bedding material shall be placed at a uniform density with minimum compaction and fine graded as specified below.

Bell or coupling holes shall be dug after the trench bottom has been graded. Such holes shall be of sufficient width to provide ample room for caulking, banding, or bolting. Holes shall be excavated only as necessary to permit accurate work in the making of the joints and to insure that the pipe will rest upon the prepared bottom of the trench, and not be supported by any portion of the joint.

Depressions for joints, other than bell-and-spigot, shall be made in accordance with the recommendations of the joint manufacturer for the particular joint used.

**601.2.4 Fine Grading:** Unless otherwise specified in the plans and/or special provisions, the bottom of the trench shall be accurately graded to provide uniform bearing and support for each section of the pipe at every point along its entire length, except for portions of the pipe where it is necessary to excavate for bells and for proper sealing of the pipe joints.

**601.2.5 Overexcavation:** Except at locations where excavation of rock from the bottom of the trench is required, care shall be taken not to excavate below the depth indicated.

Unauthorized excavation below the specified grade line shall be refilled at the Contractor's expense with ABC material compacted to a uniform density of not less than 95 percent of the maximum density as determined by AASHTO T-99 and T-191 or ASTM D6938. When AASHTO T-99, method A or B, and T-191 are used for density determination, ARIZ 227c will be used for rock correction.

Whenever rock is encountered in the trench bottom, it shall be overexcavated to a minimum depth of six inches below the O.D. of the pipe. This overexcavation shall be filled with granular material placed with the minimum possible compaction.

Whenever unsuitable soil incapable of supporting the pipe is encountered, the Contractor will notify the Engineer and a field determination will be made as to the depth of overexcavation and the granular fill required.

**601.2.6 Excavation for Manholes, Valves, Inlets, Catch Basins and Other Accessories:** The Contractor may excavate to place the concrete structure directly against the excavated surface, provided that the faces of the excavation are firm and unyielding and are at all points outside the structure lines shown on the plans. If the native material is such that it will not stand without sloughing or if precast structures are used, the Contractor shall overexcavate to place the structure and this overexcavation shall be backfilled with the same material required for the adjoining pipe line trench and compacted per Table 601-2.

Any unnecessary excavation below the elevation indicated for the foundation of any structure shall be replaced with the same class of concrete specified for the structure or with 1 ½ sack controlled low strength material as specified in Section 728. When the replacement material is structural concrete, the material shall be placed at the same time as the structure. However, when using 1 ½ sack controlled low strength material, placement of the material shall be per Section 604 which will require a time lag between the material and the structural concrete. The placement of the additional material shall be at no cost to the Agency.

**601.2.7 Pavement and Concrete Cutting and Removal:** Where trenches lie within the Portland cement concrete section of streets, alleys, driveways, or sidewalks, etc., such concrete shall be sawcut to neat, vertical, true lines in such a manner that the adjoining surface will not be damaged. The minimum depth of cut shall be 1 ½ inches or 1/4 of the thickness, whichever is greater.

Asphalt pavement shall be clean-cut, with approved equipment and by approved methods in accordance with the requirements of Section 336.

No ripping or rooting will be permitted outside limits of cuts. Surfacing materials removed shall be hauled from the job site immediately, and will not be permitted in the backfill.

Revised 2012

il 200-1 and 200-2 for further requirements.

**SECTION 601**

**601.2.8 Grading and Stockpiling:** All grading in the vicinity of trench excavation shall be controlled to prevent surface water from flowing into the trenches. Any water accumulated in the trenches shall be removed by pumping or by other approved methods.

During excavation, material suitable for backfilling shall be piled in an orderly manner, a sufficient distance back from the edges of trenches, to avoid overloading and to prevent slides or cave-ins. Material unsuitable for backfilling, or excess material, shall be hauled from the job site and disposed of by the Contractor.

The Contractor shall, prior to final acceptance of the work, submit a letter to the Contracting Agency stating the location of each disposal site for all excess or unsuitable material and certify that he has obtained the property owner's permission for the disposal of all such materials.

Where the plans and/or special provisions provide for segregation of topsoil from underlying material for purposes of backfill, the material shall not be mixed.

**601.2.9 Shoring and Sheeting:** The Contractor shall do such trench bracing, sheathing, or shoring necessary to perform and protect the excavation as required for safety and conformance to governing laws. The bracing, sheathing, or shoring shall not be removed in one operation but shall be done in successive stages as determined by the Engineer to prevent overloading of the pipe during backfilling operations. The cost of the bracing, sheathing, or shoring, and the removal of same, shall be included in the unit price for the pipe.

When vertical side walls are to be excavated and trench boxes are not used, the contractor shall do such trench bracing, sheathing, or shoring necessary to perform and protect the excavation as required for safety and conformance to governing laws.

**Comment [WW3]:** COC insert

All shoring and sheeting deemed necessary to protect the excavation and to safeguard employees, shall be installed. See Section 107.

**601.2.10 Open Trench:** Except where otherwise noted in the special provisions, or approved in writing by the Engineer, the maximum length of open trench, where the construction is in any stage of completion (excavation, pipe laying or backfilling), shall not exceed 1320 feet in the aggregate at any one location.

Any excavated area shall be considered open trench until all ABC for pavement replacement has been placed and compacted. With the approval of the Engineer, pipe laying may be carried on at more than one separate location, the restrictions on open trench applying to each location. Trenches across streets shall be completely backfilled as soon as possible after pipe laying.

Substantial steel plates with adequate trench bracing shall be used to bridge across trenches at street crossings where trench backfill and temporary patches have not been completed during regular work hours. Safe and convenient passage for pedestrians shall be provided. The Engineer may designate a passage to be provided at any point he deems necessary. Access to hospitals, fire stations and fire hydrants must be maintained at all times.

Steel plates shall be installed in accordance with Detail 211.

**601.3 PROTECTION OF EXISTING UTILITIES:**

**601.3.1 Utilities:** Unless otherwise shown on the plans or stated in the specifications, all utilities, either underground or overhead, shall be maintained in continuous service throughout the entire contract period. The Contractor shall be responsible and liable for any damages to or interruption of service caused by the construction.

If the Contractor desires to simplify his operation by temporarily or permanently relocating or shutting down any utility or appurtenance, he shall make the necessary arrangements and agreements with the owner and shall be completely responsible for all costs concerned with the relocation or shutdown and reconstruction. All property shall be reconstructed in its original or new location as soon as possible and to a condition at least as good as its previous condition. This cycle of relocation or shutdown and reconstruction shall be subject to inspection and approval by both the Engineer and the owner of the utility.

**SECTION 601**

The Contractor shall be entirely responsible for safeguarding and maintaining all conflicting utilities that are shown on the plans (Sections 107 and 105 apply). This includes overhead wires and cables and their supporting poles whether they are inside or outside of the open trench. If, in the course of work, a conflicting utility line that was not shown on the plans is discovered, the Contracting Agency will either negotiate with the owner for relocation, relocate the utility, change the alignment and grade of the trench or as a last resort, declare the conflict as "extra work" to be accomplished by the Contractor in accordance with Section 104.

**601.3.2 Irrigation Ditches, Pipes and Structures:** The Contractor shall contact the owners of all irrigation facilities, and make arrangements for necessary construction clearances and/or dry-up periods.

All irrigation ditches, dikes, headgates, pipe, valves, checks, etc., damaged or removed by the Contractor, shall be restored to their original condition or better, by the Contractor at no additional cost to the Contracting Agency.

**601.3.3 Building, Foundations and Structures:** Where trenches are located adjacent to building, foundations, and structures, the Contractor shall take all necessary precaution against damage to them. The Contractor shall be liable for any damage caused by the construction.

Except where authorized in the special provisions or in writing by the Engineer, water settling of backfill material in trenches adjacent to structures will not be permitted.

**601.3.4 Permanent Pipe Supports:** Permanent pipe supports for the various types and sizes of sewer, water and utility lines shall conform to the Standard Details or the details shown on the plans. Such pipe supports shall be erected at the locations shown on the plans and/or at any other locations as necessary as determined by the Engineer.

~~**601.3.5 Electronic, Telephonic, Telegraphic, Electrical, Oil and Gas Lines:** These underground facilities shall be adequately supported by the Contractor. Support for plastic pipes shall be continuous along the bottom of the pipe. Support for metal pipe and electrical conduit may be continuous or nylon webbing may be used for suspension at no greater than ten-foot intervals.~~

~~The Contractor shall avoid damaging the plastic pipe, pipeways or conduits during trench backfilling and during foundation and bedding placement.~~

~~There will be no measurement or payment for this work. The Contractor will include all associated costs in the unit price for the conduit installation.~~

**601.4 FOUNDATION, BEDDING, HAUNCHING, BACKFILLING AND COMPACTION:**

**601.4.1 Foundation:** The native or prepared material (when required) upon which the bedding material is placed.

**601.4.~~1~~ 2 ~~Foundation~~Bedding:** The material upon which the conduit or structure is to be placed shall be accurately finished to the grade or dimensions shown on the plans or as directed by the Engineer. The bottom portion of the trench shall be brought to grade so that the conduit or structure will be continuously in contact with the material on which it is being placed. Compaction requirements shall be per Section 601.4.6. If rocky or unsuitable soil is encountered, Subsection 601.2.5 applies.

Unless otherwise specified, the minimum material type shall be granular.

**601.4.~~2~~ 3 ~~Bedding~~Haunching**: ~~Bedding s~~The material placed between the bedding and springline shall be constructed using the specified material and compacted for the full length of the pipe so as to distribute the load-bearing reaction uniformly to the bedding. If placed in lifts, the thickness shall be as required to achieve the specified compaction. Placed material shall be deposited and compacted to the specified density uniformly on each side of the pipe to prevent lateral displacement of the pipe. Compaction requirements shall be per Section 601.4.6. ~~hall consist of granular material containing no pieces larger than 1 ½ inches and free of broken concrete, broken pavement, wood or other deleterious material. Open graded rock will not be used without the written approval of the Engineer.~~

~~Where water consolidation is used, bedding for conduits, 24 inches or less in I.D., may be placed in one lift. For larger conduits the first lift shall not exceed the springline of the pipe.~~

~~Where mechanical compaction is used, t~~The moisture content shall be such that the specified compaction can be obtained. ~~The first lift shall be 8 inches or two thirds of the distance to the springline whichever is greater. Succeeding lifts shall not exceed 2 feet loose and e~~Extreme care will be taken to prevent damage to or movement of the conduit by the compaction equipment.

**Comment [WW4]:** Consider deleting. Working Group perspective.

**Formatted:** Font: Not Bold

**Comment [WW5]:** Water consolidation/Jetting not allowed. All references were removed in the spec.

Unless otherwise specified, the minimum material type shall be granular. Native or CLSM may be used as an option, or agency requirement.

**601.4.~~3~~ 4 ~~Backfill~~Initial Backfill:** The material placed between the springline to 12 inches above top of pipe (minimum)~~Backfill shall be sound earthen material free from broken concrete, broken pavement, wood or other deleterious material. Unless otherwise specified, this may be native material with no piece larger than 4 inches, select material or aggregate base course.~~ shall be placed in lifts the height of which shall not exceed that which can be effectively compacted depending on the type of material, type of equipment and methods used, and under no circumstances shall exceed 4 feet. Extreme care will be taken to prevent damage to or movement of the conduit by the compaction equipment. Compaction requirements shall be per Section 601.4.6. ~~Backfill under street pavement shall be constructed per Detail 200-1 with the type of replacement noted on the plans or in the special provisions. Unless otherwise noted, backfill under single curb, curb and gutter, sidewalk, driveways, valley gutters, etc. shall be the same as the adjacent street pavement.~~

Unless otherwise specified, the minimum material type shall be granular. Native or CLSM may be used as an option, or agency requirement.

~~Where water consolidation is used, backfill will be placed in lifts as required in the following table prior to settlement.~~

| ~~Trench Width~~ | ~~Backfill Lifts~~ |
|---|---|
| ~~18" to 24"~~ | ~~Not to exceed 4'~~ |
| ~~25" to 36"~~ | ~~Not to exceed 6'~~ |
| ~~Over 36"~~ | ~~Not to exceed 8'~~ |

~~The above backfill lift limitations are not applicable when water saturation is done by the jetting method.~~

~~Where mechanical compaction is used, backfill shall be placed in lifts the height of which shall not exceed that which can be effectively compacted depending on the type of material, type of equipment and methods used, and under no circumstances shall exceed 4 feet.~~

Backfill, around utilities that are exposed during trench excavation, shall be placed in accordance with the ~~bedding~~ haunching methods.

**601.4.5 Final Backfill:** The material placed above the initial backfill shall be placed in lifts the height of which shall not exceed that which can be effectively compacted depending on the type of material, type of equipment and methods used, and under no circumstances shall exceed 4 feet. Compaction requirements shall be per Section 601.4.6. Backfill under street pavement shall be constructed per Detail 200-1 with the type of replacement noted on the plans or in the special provisions. Unless otherwise noted, backfill under single curb, curb and gutter, sidewalk, driveways, valley gutters, etc. shall be the same as the adjacent street pavement.~~Where water consolidation is used, backfill will be placed in lifts as required in the following table prior to settlement.~~

Unless otherwise specified, the minimum material type shall be granular. Native or CLSM may be used as an option, or agency requirement.

**Formatted:** Justified

**Comment [WW6]:** Move to other area in Spec?

**Formatted:** Justified

**Formatted:** Justified

| Trench Width | Backfill Lifts |
|---|---|
| 18" to 24" | Not to exceed 4' |
| 25" to 36" | Not to exceed 6' |
| Over 36" | Not to exceed 8' |

The above backfill lift limitations are not applicable when water saturation is done by the jetting method.

Where mechanical compaction is used, backfill shall be placed in lifts the height of which shall not exceed that which can be effectively compacted depending on the type of material, type of equipment and methods used, and under no circumstances shall exceed 4 feet.

**601.4.4 6 Compaction Densities:** Unless otherwise provided in the plans and/or special provisions, the trench backfill shall be thoroughly compacted to not less than the densities in Table 601-2 when tested and determined by AASHTO T-99 and T-191 or ASTM D6938. When AASHTO T-99, method A or B, and T-191 are used for density determination, ARIZ-227c will be used for rock correction. All compaction discussed within this section shall be performed within 2 percentage points of optimum moisture content unless otherwise noted in the project plans or project specifications.

Formatted: Font: Bold

The density required will depend on the Type shown on the plans and/or called for in the special provisions. Density required for each type shall comply with Table 601-2.

**TABLE 601-2**
**MINIMUM TRENCH COMPACTION DENSITIES**

| Backfill Type | Location | From Surface To 2 feet Below Surface | From 2 feet Below Surface To 1 foot Above Top of Pipe | From 1 foot Above Top of Pipe to Bottom of Trench |
|---|---|---|---|---|
| I | Under any existing or proposed pavement, curb, gutter, sidewalk, or such construction included in the contract, or when any part of the trench excavation is within 2-feet of the above. | 100% for granular 95% for non-granular | 9095% | 9095% |
| II | On any utility easement street, road or alley right-of-way outside limits of (I). | 85% | 85% | 90% |
| III | Around any structures (manholes, etc.) or exposed utilities. | 95100% in all cases or CLSM | | |

Note: The type required will generally be shown on the plans and the plans will govern. Where no type is shown on the plans, the type shall comply with Table 601-2.

A consideration in determining the backfill Types as shown on the plans, is based on the trench widths as shown in the Contract Documents. If these trench widths increase beyond those widths referred to above and fall within the 2-foot limit of paved surfaces and other improvements due to construction exigencies, the backfill designation for that portion within the 2-foot limit of such improvements shall be Type I even though Type II backfill is shown on the plans.

**601.4.5 7 Compaction Methods:** Unless otherwise provided in the plans and/or special provisions, Water consolidation by jetting shall be accomplished with a 1 ½ inches pipe of sufficient length to reach the bottom of the lift being settled with adequate hose attached and a water pressure of not less than 30 psi. All jetting shall be accomplished traversely across the trench at intervals of not more than 6 feet with the jetting locations on one side of the trench offset to the jetting locations on the other side of the trench. The entire lift shall be leveled and completely saturated working from the top to the bottom.

Jetting shall be used as the consolidation method for all conduit bedding. The Contractor shall be entirely responsible for establishing each lift depth so as to avoid floating the conduit being placed and shall make any repair or replacement at no cost to the Contracting Agency. However, for conduit larger than 24 inches I.D. the first lift shall not exceed the springline of the conduit.

Formatted: Font: Bold

~~Flooding is not acceptable as a water consolidation method unless authorized in the specification or by a written change order. It will consist of the inundation of the entire lift with water and then puddle with poles or bars to insure saturation of the entire lift.~~

~~Where jetting or flooding is utilized and the surrounding material is such that it does not permit proper drainage, the Contractor shall provide, at his expense a sump and a pump at the downstream end to remove the accumulated water.~~

~~The use of water consolidation does not relieve the Contractor from the responsibility to make his own determination that such methods will not result in damage to existing improvements. The Contractor shall be responsible for any damage incurred.~~

~~Where water consolidation is not permitted or does not result in adequate compaction, the~~ backfill material shall be uniformly compacted ~~with hand and/or~~by mechanical work methods. ~~using equipment such as rollers, pneumatic tamps, and hydro-hammers or other approved devices which secure uniform and required density without injury to the pipe or related structures.~~

Water consolidation methods are not allowed.

~~Where Type I backfill is required, water consolidation will not be permitted for non-granular material, except in the following situation. In a new development prior to paving and prior to opening the area to public traffic, water consolidation, will be permitted for non-granular material at the Contractor's discretion and responsibility.~~

**601.4.~~6~~ 8 Specifications for Granular Material:** For purposes of this specification, granular material shall mean material for which the sum of the plasticity index and the percent of the material passing a No. 200 sieve shall not exceed 23. The plasticity index shall be tested in accordance with AASHTO T-146 Method A (Wet Preparation), T-89 and T-90.

**601.4.~~7~~ 9 Rights-Of-Way Belonging to Others**: Backfill and compaction for irrigation lines of the Salt River Valley Water Users' Association and Roosevelt Irrigation Districts and for trenches in State of Arizona and Maricopa County right-of-way outside the limits of the Contracting Agency shall be accomplished in accordance with their permit and/or specifications.

**601.4.~~8~~ 10 Test Holes:** Boring logs shown on the plans do not constitute a part of the contract and are included for the Contractor's convenience only. It is not intended to imply that the character of the material is the same as that shown on the logs at any point other than that where the boring was made. The Contractor shall satisfy himself regarding the character and amount of rock, gravel, sand, silt, clay and water to be encountered in the work to be performed.

**601.4.~~9~~ 11 ~~Foundation and~~ Bedding and Backfilling for Electronic, Telephonic, Telegraphic, Electrical, Oil and Gas Lines:** ~~Foundation and~~ The bedding and backfill for these underground facilities shall be native material or sand which conforms to the grading requirement of ASTM C33 for fine aggregate. When backfill material consists of aggregate base course, crushed stone, or other material containing stones, only sand will be used for foundation, and bedding. The ~~foundation~~ bedding depth shall be six inches and ~~bedding~~ backfill depth shall be one foot above the top of the facility. Compaction will be in accordance with Section 601.

**601.5 CONTRACTOR CERTIFICATION OF INSTALLATION PROCEDURES:**

When requested in the Special Provisions or by the Engineer prior to installation, the Contractor shall furnish to the Contracting Agency an affidavit (certification) from the pipe manufacturer (or his designee) stating that the Contractor is familiar with the manufacturer's suggested installation methods and procedures and the installation complies with those procedures and is consistent with MAG requirements.

Also, when required in the Special/Technical Provisions or requested by the Engineer, the pipe manufacturer or his designee will review the Contractor's methods and procedures for pipe installation in the field. The Contractor will make any adjustments in the installation as recommended by the manufacturer or his representative. If necessary, the Contractor may be required to reinstall or provide corrections to pipe installed prior to the field review at no cost to the Agency. Once the manufacturer or his representative has reviewed the Contractor's installation methods and the Contractor has adjusted his installation methods as recommended by the same, the manufacturer or his representative shall furnish to the Contracting Agency an affidavit (certification) that the Contractor's installation methods and procedures, at the time of the review, complied with the manufacturer's installation practices. The affidavit must provide the name of the manufacturer's representative witnessing the pipe installation.

**Comment [WW7]:** Considering removal or moving to install specs?

**601.6 PAVEMENT REPLACEMENT AND SURFACE RESTORATION:**

**601.6.1 Grading:** The Contractor shall do such grading in the area adjacent to backfilled trenches and structures as may be necessary to leave the area in a neat and satisfactory condition approved by the Engineer.

**601.6.2 Restoring Surface:** All streets, alleys, driveways, sidewalks, curbs, or other surfaces, in which the surface is broken into or damaged by the installation of the new work, shall be resurfaced in kind or as specified to the satisfaction of the Engineer in accordance with Section 336.

**601.6.3 Cleanup:** The job site shall be left in a neat and acceptable condition. Excess soil, concrete, etc., shall be removed from the premises.

**601.6.4 Temporary Pavement:** The Contractor shall install temporary asphalt pavement or the first course of permanent pavement replacement in accordance with Section 336 immediately following backfilling and compaction of trenches that have been cut through existing pavement. Except as otherwise provided in Section 336, this preliminary pavement shall be maintained in a safe and reasonably smooth condition until required backfill compaction is obtained and final pavement replacement is ordered by the Engineer. Temporary paving removed shall be hauled from the job site and disposed of by the Contractor at no additional cost to the Contracting Agency.

**601.7 PAYMENT:**

No pay item will be included in the proposal, nor direct payment made for trench excavation, backfilling, compaction, or placement of temporary pavement. The cost of these features of the work shall be included in the unit price per linear foot for furnishing and laying pipe.

***- End of Section -***

Case 13-15 revisions 03-19-14

## SECTION 603

## FLEXIBLE PIPE TRENCH EXCAVATION, BACKFILLING AND COMPACTION

Formatted: Font: Bold

### 603.1 DESCRIPTION:

The work covered by this specification consists of furnishing all plant, labor, equipment, appliances and materials, and performing all operations in connection with the trench excavation, backfilling and compaction for a single flexible pipe installation in accordance with the plans and special provisions. Pipe materials that are considered to be flexible include thermoplastic pipes and corrugated metal pipe and arches. See Section 601 for rigid pipe trench excavation, backfilling and compaction.

For the purpose of this specification, flexible pipe shall include 8 inches through 120 inches nominal diameter.

The Trench Cross-Section Detail shown on Detail 200-2 illustrates the terminology used in this specification.

See Section 615 for sewer line construction procedures.

See Section 618 for storm drain construction procedures.

HDPE pipe and fittings shall conform to Section 738. SRPE pipe and fittings shall conform to Section 739. Polypropylene pipe and fittings shall conform to Section 740. PVC pipe and fittings shall conform to Section 745. Corrugated metal pipe and arches shall conform to Section 760.

Excavation for appurtenance structures, such as manholes, inlets, transition structures, junction structures, vaults, valve boxes, catch basins, etc., shall be deemed to be in the category of trench excavation.

See Section 602 for trenchless installations.

### 603.2 EXCAVATION:

**601.2.1 General:** The Contractor shall perform all excavation of every description and of whatever substances encountered, to the depths indicated on the plans, and including excavation ordered by the Engineer of compacted backfill for the purpose of making density tests on any portion of the backfill.

All excavation shall be open cut unless otherwise shown on the plans or approved by the Engineer.

**603.2.2 Trench Widths:** Trenches for flexible pipe other than profile HDPE pipe, meeting ASTM F894, shall conform to the dimensions in Table 603-1, unless otherwise specified in the special provisions, indicated on the plans, and/or approved by the Engineer. Trench widths for profile HDPE pipe, meeting ASTM F894, will be designed by the Engineer and included on the plans or in the special provisions.

**Table 603-1**

**FLEXIBLE PIPE – TRENCH WIDTHS**

| Size of Pipe (Nom. Dia.) | Maximum Width At Top Of Pipe Greater Than O.D. Of Barrel | Minimum Width At Springline Each Side of Pipe (1) |
|---|---|---|
| Less than 18 inches | 20 inches | 8 inches |
| 18 inches to 24 inches inclusive | 23 inches | 9.5 inches |
| 27 inches to 36 inches inclusive | 28 inches | 12 inches |
| 42 inches to 60 inches inclusive | 34 inches | 14 inches |
| 66 inches to 78 inches inclusive | 44 inches | 16 inches |
| 84 inches to 96 inches inclusive | 48 inches | 18 inches |
| 102 inches to 120 inches inclusive | 54 inches | 21 inches |

(1) When the specified compaction cannot be obtained in the pipe embedment zone, the Contractor shall make necessary changes in his methods and/or equipment to obtain the desired results. In some instances, the Minimum

Width at springline shall be adjusted wider to assist the Contractor in obtaining the compaction. The Engineer must be satisfied with the Contractor's compaction effort, concur with the change and approve the revised distance. There shall be no additional cost to the Agency for the extra trench width.

For multiple pipe installations in a single trench, the Engineer shall provide details on the plans or in the Special/Technical Provisions as to the layout, pipe configuration, distances between pipes and trench walls, the type of backfill and bedding materials, etc.

The width of the trench shall not be greater than the maximum indicated in Table 603-1, at and below the level of the top of the pipe. The width of the trench above that level may be made as wide as necessary for sheeting and bracing, and for proper installation of the work.

If the maximum trench width as specified in Table 603-1 is exceeded at the top of the pipe the Contractor shall provide, at no additional cost to the Contracting Agency, the necessary additional load bearing capacity by means of ~~bedding~~initial backfill, having a higher bedding factor than that specified, higher strength pipe, a concrete cradle, cap or encasement, or by other means approved in writing by the Engineer.

**Comment [WW1]:** Discuss

**603.2.3 Trench Grade:** Alignment and elevation stakes shall be furnished the Contractor at set intervals and agreed upon offsets. On water main projects, elevation stakes will be furnished only when deemed necessary by the Engineer. In all cases where elevation stakes are furnished, the Engineer will also furnish the Contractor with cut sheets.

For all pipe 12 inches or greater in diameter, the Contractor shall excavate for and provide an initial granular bedding at least 4 inches thick or 1/12 the O.D. of the pipe whichever is greater. This bedding material shall be placed at a uniform density with minimum compaction and fine graded as specified below.

Bell or coupling holes shall be dug after the trench bottom has been graded. Such holes shall be of sufficient width to provide ample room for caulking, banding, or bolting. Holes shall be excavated only as necessary to permit accurate work in the making of the joints and to insure that the pipe will rest upon the prepared bottom of the trench, and not be supported by any portion of the joint.

Depressions for joints, other than bell-and-spigot, shall be made in accordance with the recommendations of the joint manufacturer for the particular joint used.

**603.2.4 Fine Grading:** Unless otherwise specified in the plans and/or special provisions, the bottom of the trench shall be accurately graded to provide uniform bearing and support for each section of the pipe at every point along its entire length, except for portions of the pipe where it is necessary to excavate for bells and for proper sealing of the pipe joints.

**603.2.5 Overexcavation:** Except at locations where excavation of rock from the bottom of the trench is required, care shall be taken not to excavate below the depth indicated.

Unauthorized excavation below the specified grade line shall be refilled at the Contractor's expense with ABC material compacted to a uniform density of not less than 95 percent of the maximum density as determined by AASHTO T-99 and T-191 or ASTM D6938. When AASHTO T-99, method A or B, and T-191 are used for density determination, ARIZ 227c will be used for rock correction.

Whenever rock is encountered in the trench bottom, it shall be overexcavated to a minimum depth of six inches below the O.D. of the pipe. This overexcavation shall be filled with granular material placed with the minimum possible compaction.

Whenever unsuitable soil incapable of supporting the pipe is encountered, the Contractor will notify the Engineer and a field determination will be made as to the depth of overexcavation and the granular fill required.

**603.2.6 Excavation for Manholes, Valves, Inlets, Catch Basins and Other Accessories:** The Contractor may excavate to place the concrete structure directly against the excavated surface, provided that the faces of the excavation are firm and unyielding and are at all points outside the structure lines shown on the plans. If the native material is such that it will not stand without sloughing or if precast structures are used, the Contractor shall overexcavate to place the structure and this overexcavation shall be backfilled with the same material required for the adjoining pipe line trench and compacted per Table 603-2.

Any unnecessary excavation below the elevation indicated for the foundation of any structure shall be replaced with the same class of concrete specified for the structure or with 1 ½ sack controlled low strength material as specified in Section 728. When the replacement material is structural concrete, the material shall be placed at the same time as the structure. However, when using 1 ½ sack controlled low strength material, placement of the material shall be per Section 604 which will require a time lag between the material and the structural concrete. The placement of the additional material shall be at no cost to the Agency.

**603.2.7 Pavement and Concrete Cutting and Removal:** Where trenches lie within the Portland cement concrete section of streets, alleys, driveways, or sidewalks, etc., such concrete shall be sawcut to neat, vertical, true lines in such a manner that the adjoining surface will not be damaged. The minimum depth of cut shall be 1 ½ inches or 1/4 of the thickness, whichever is greater.

Asphalt pavement shall be clean-cut, with approved equipment and by approved methods in accordance with the requirements of Section 336.

No ripping or rooting will be permitted outside limits of cuts. Surfacing materials removed shall be hauled from the job site immediately, and will not be permitted in the backfill.

See Detail 200-1 and 200-2 for further requirements.

**603.2.8 Grading and Stockpiling:** All grading in the vicinity of trench excavation shall be controlled to prevent surface water from flowing into the trenches. Any water accumulated in the trenches shall be removed by pumping or by other approved methods.

During excavation, material suitable for backfilling shall be piled in an orderly manner, a sufficient distance back from the edges of trenches, to avoid overloading and to prevent slides or cave-ins. Material unsuitable for backfilling, or excess material, shall be hauled from the job site and disposed of by the Contractor.

The Contractor shall, prior to final acceptance of the work, submit a letter to the Contracting Agency stating the location of each disposal site for all excess or unsuitable material and certify that he has obtained the property owner's permission for the disposal of all such materials.

Where the plans and/or special provisions provide for segregation of topsoil from underlying material for purposes of backfill, the material shall not be mixed.

**603.2.9 Shoring and Sheeting:** The Contractor shall do such trench bracing, sheathing, or shoring necessary to perform and protect the excavation as required for safety and conformance to governing laws. The bracing, sheathing, or shoring shall not be removed in one operation but shall be done in successive stages as determined by the Engineer to prevent overloading of the pipe during backfilling operations. The cost of the bracing, sheathing, or shoring, and the removal of same, shall be included in the unit price for the pipe.

All shoring and sheeting deemed necessary to protect the excavation and to safeguard employees, shall be installed. See Section 107.

When vertical side walls are to be excavated and trench boxes are not used, the contractor shall do such trench bracing, sheathing, or shoring necessary to perform and protect the excavation as required for safety and conformance to governing laws.

**Comment [WW2]:** COC insert

**603.2.10 Open Trench:** Except where otherwise noted in the special provisions, or approved in writing by the Engineer, the maximum length of open trench, where the construction is in any stage of completion (excavation, pipe laying or backfilling), shall not exceed 1320 feet in the aggregate at any one location.

Any excavated area shall be considered open trench until all ABC for pavement replacement has been placed and compacted. With the approval of the Engineer, pipe laying may be carried on at more than one separate location, the restrictions on open trench applying to each location. Trenches across streets shall be completely backfilled as soon as possible after pipe laying.

Substantial steel plates with adequate trench bracing shall be used to bridge across trenches at street crossings where trench backfill and temporary patches have not been completed during regular work hours. Safe and convenient passage for

pedestrians shall be provided. The Engineer may designate a passage to be provided at any point he deems necessary. Access to hospitals, fire stations and fire hydrants must be maintained at all times.

Steel plates shall be installed in accordance with Detail 211.

**603.3 PROTECTION OF EXISTING UTILITIES:**

**603.3.1 Utilities:** Unless otherwise shown on the plans or stated in the specifications, all utilities, either underground or overhead, shall be maintained in continuous service throughout the entire contract period. The Contractor shall be responsible and liable for any damages to or interruption of service caused by the construction.

If the Contractor desires to simplify his operation by temporarily or permanently relocating or shutting down any utility or appurtenance, he shall make the necessary arrangements and agreements with the owner and shall be completely responsible for all costs concerned with the relocation or shutdown and reconstruction. All property shall be reconstructed in its original or new location as soon as possible and to a condition at least as good as its previous condition. This cycle of relocation or shutdown and reconstruction shall be subject to inspection and approval by both the Engineer and the owner of the utility.

The Contractor shall be entirely responsible for safeguarding and maintaining all conflicting utilities that are shown on the plans (Sections 107 and 105 apply). This includes overhead wires and cables and their supporting poles whether they are inside or outside of the open trench. If, in the course of work, a conflicting utility line that was not shown on the plans is discovered, the Contracting Agency will either negotiate with the owner for relocation, relocate the utility, change the alignment and grade of the trench or as a last resort, declare the conflict as "extra work" to be accomplished by the Contractor in accordance with Section 104.

**603.3.2 Irrigation Ditches, Pipes and Structures:** The Contractor shall contact the owners of all irrigation facilities, and make arrangements for necessary construction clearances and/or dry-up periods.

All irrigation ditches, dikes, headgates, pipe, valves, checks, etc., damaged or removed by the Contractor, shall be restored to their original condition or better, by the Contractor at no additional cost to the Contracting Agency.

**603.3.3 Building, Foundations and Structures:** Where trenches are located adjacent to building, foundations, and structures, the Contractor shall take all necessary precaution against damage to them. The Contractor shall be liable for any damage caused by the construction.

Except where authorized in the special provisions or in writing by the Engineer, water settling of backfill material in trenches adjacent to structures will not be permitted.

**603.3.4 Permanent Pipe Supports:** Permanent pipe supports for the various types and sizes of sewer, water and utility lines shall conform to the Standard Details or the details shown on the plans. Such pipe supports shall be erected at the locations shown on the plans and/or at any other locations as necessary as determined by the Engineer.

~~**603.3.5 Electronic, Telephonic, Telegraphic, Electrical, Oil and Gas Lines:** These underground facilities shall be adequately supported by the Contractor. Support for plastic pipes shall be continuous along the bottom of the pipe. Support for metal pipe and electrical conduit may be continuous or nylon webbing may be used for suspension at no greater than ten-foot intervals.~~

~~The Contractor shall avoid damaging the plastic pipe, pipeways or conduits during trench backfilling and during foundation and bedding placement.~~

~~There will be no measurement or payment for this work. The Contractor will include all associated costs in the unit price for the conduit installation.~~

**Comment [WW3]:** Consider deleting. Working Group perspective.

**603.4 FOUNDATION, BEDDING, HAUNCHING, BACKFILLING AND COMPACTION:**

**603.4.1 Foundation:** The native or prepared material (when required) upon which the bedding material is placed.

**603.4.~~1~~ 2 Bedding:** The material upon which the conduit or structure is to be placed shall be accurately finished to the grade or dimensions shown on the plans or as directed by the Engineer. The bottom portion of the trench shall be brought to grade

so that the conduit or structure will be continuously in contact with the material on which it is being placed. Compaction requirements shall be per Section 601.4.6. If rocky or unsuitable soil is encountered, Subsection 603.2.5 applies.

Unless otherwise specified, the minimum material type shall be granular.

**603.4.~~2~~ 3 Haunching**: The material placed between the bedding and springline shall be constructed using the specified material and compacted for the full length of the pipe so as to distribute the load-bearing reaction uniformly to the bedding. If placed in lifts, the thickness shall be as required to achieve the specified compaction. Placed material shall be deposited and compacted to the specified density uniformly on each side of the pipe to prevent lateral displacement of the pipe. Compaction requirements shall be per Section 601.4.6.

The moisture content shall be such that the specified compaction can be obtained. Extreme care will be taken to prevent damage to or movement of the conduit by the compaction equipment.

Unless otherwise specified, the minimum material type shall be granular. Native or CLSM may be used as an option, or agency requirement.

**603.4.~~3~~ 4 Initial Backfill:** The material placed between the springline to 12 inches above top of pipe (minimum) shall be placed in lifts the height of which shall not exceed that which can be effectively compacted depending on the type of material, type of equipment and methods used, and under no circumstances shall exceed 4 feet. Extreme care will be taken to prevent damage to or movement of the conduit by the compaction equipment. Compaction requirements shall be per Section 601.4.6.

The moisture content shall be such that the specified compaction can be obtained. ~~backfill shall be placed in lifts the height of which shall not exceed that which can be effectively compacted depending on the type of material, type of equipment and methods used, and under no circumstances shall exceed 4 feet.~~ Extreme care will be taken to prevent damage to or movement of the conduit by the compaction equipment.

Unless otherwise specified, the minimum material type shall be granular. Native or CLSM may be used as an option, or agency requirement.

Backfill, around utilities that are exposed during trench excavation, shall be placed in accordance with the ~~haunching~~Haunching and Initial Backfill methods.

**603.4.~~4~~ 5 Final Backfill:** The material placed above the initial backfill shall be placed in lifts the height of which shall not exceed that which can be effectively compacted depending on the type of material, type of equipment and methods used, and under no circumstances shall exceed 4 feet. Compaction requirements shall be per Section 601.4.6. Backfill under street pavement shall be constructed per Detail 200-1 with the type of replacement noted on the plans or in the special provisions. Unless otherwise noted, backfill under single curb, curb and gutter, sidewalk, driveways, valley gutters, etc. shall be the same as the adjacent street pavement.

Unless otherwise specified, the minimum material type shall be granular. Native or CLSM may be used as an option, or agency requirement.

Backfill shall be placed in lifts the height of which shall not exceed that which can be effectively compacted depending on the type of material, type of equipment and methods used, and under no circumstances shall exceed ~~4~~ 1 ~~feet~~foot.

**603.4.~~5~~ 6 Compaction Densities:** Unless otherwise provided in the plans and/or special provisions, the trench backfill shall be thoroughly compacted to not less than the densities in Table 603-2 when tested and determined by AASHTO T-99 and T-191 or ASTM D6938. When AASHTO T-99, method A or B, and T-191 are used for density determination, ARIZ-227c will be used for rock correction. All compaction discussed within this section shall be performed within 2 percentage points of optimum moisture content unless otherwise noted in the project plans or project specifications.

The density required will depend on the Type shown on the plans and/or called for in the special provisions. Density required for each type shall comply with Table 603-2.

| TABLE 601-2 | | | | |
|---|---|---|---|---|
| MINIMUM TRENCH COMPACTION DENSITIES | | | | |
| **Backfill Type** | **Location** | **From Surface To 2 feet Below Surface** | **From 2 feet Below Surface To 1 foot Above Top of Pipe** | **From 1 foot Above Top of Pipe to Bottom of Trench** |
| I | Under any existing or proposed pavement, curb, gutter, sidewalk, or such construction included in the contract, or when any part of the trench excavation is within 2-feet of the above. | 100% for granular 95% for non-granular | ~~90~~95% | ~~90~~95% |
| II | On any utility easement street, road or alley right-of-way outside limits of (I). | 85% | 85% | 90% |
| III | Around any structures (manholes, etc.) or exposed utilities. | ~~95~~100% in all cases or CLSM | | |

Note: The type required will generally be shown on the plans and the plans will govern. Where no type is shown on the plans, the type shall comply with Table 603-2.

A consideration in determining the backfill Types as shown on the plans, is based on the trench widths as shown in the Contract Documents. If these trench widths increase beyond those widths referred to above and fall within the 2-foot limit of paved surfaces and other improvements due to construction exigencies, the backfill designation for that portion within the 2-foot limit of such improvements shall be Type I even though Type II backfill is shown on the plans.

**603.4.~~6~~ 7 Compaction Methods:** Unless otherwise provided in the plans and/or special provisions, backfill material shall be compacted ~~with hand and/or~~by mechanical work methods. ~~using equipment such as rollers, pneumatic tamps, and hydro-hammers or other approved devices which secure uniform and required density without injury to the pipe or related structures.~~
Water consolidation methods are not allowed.

**603.4.~~7~~ 8 Specifications for Granular Material:** Coarse aggregate shall consist of crushed rock as defined in Section 701.2 with 100 percent of the specified size of aggregate having one fractured face tested in accordance with ARIZ-212, and having the gradation complying with ASTM D448, Table 1, Size Numbers 6, 67, 68, 7, 78, or 8 as recommended by the Engineer. The gradation size number to be furnished shall be shown on the plans or in the project specifications.

**603.4.~~8~~ 9 Rights-Of-Way Belonging to Others**: Backfill and compaction for irrigation lines of the Salt River Valley Water Users' Association and Roosevelt Irrigation Districts and for trenches in State of Arizona and Maricopa County right-of-way outside the limits of the Contracting Agency shall be accomplished in accordance with their permit and/or specifications.

**603.4.~~9~~ 10 Test Holes:** Boring logs shown on the plans do not constitute a part of the contract and are included for the Contractor's convenience only. It is not intended to imply that the character of the material is the same as that shown on the logs at any point other than that where the boring was made. The Contractor shall satisfy himself regarding the character and amount of rock, gravel, sand, silt, clay and water to be encountered in the work to be performed.

**603.4.~~10~~ 11 Bedding and Backfilling for Electronic, Telephonic, Telegraphic, Electrical, Oil and Gas Lines:** The bedding and backfill for these underground facilities shall be native material or sand which conforms to the grading requirement of ASTM C33 for fine aggregate. When backfill material consists of aggregate base course, crushed stone, or other material containing stones, only sand will be used for foundation, and bedding. The bedding depth shall be six inches and backfill depth shall be one foot above the top of the facility. Compaction will be in accordance with Section 603.

**603.5 CONTRACTOR CERTIFICATION OF INSTALLATION PROCEDURES:**

When requested in the Special Provisions or by the Engineer prior to installation, the Contractor shall furnish to the Contracting Agency an affidavit (certification) from the pipe manufacturer (or his designee) stating that the Contractor is familiar with the manufacturer's suggested installation methods and procedures and the installation complies with those procedures and is consistent with MAG requirements.

Also, when required in the Special/Technical Provisions or requested by the Engineer, the pipe manufacturer or his designee will review the Contractor's methods and procedures for pipe installation in the field. The Contractor will make any adjustments in the installation as recommended by the manufacturer or his representative. If necessary, the Contractor may be required to reinstall or provide corrections to pipe installed prior to the field review at no cost to the Agency. Once the manufacturer or his representative has reviewed the Contractor's installation methods and the Contractor has adjusted his installation methods as recommended by the same, the manufacturer or his representative shall furnish to the Contracting Agency an affidavit (certification) that the Contractor's installation methods and procedures, at the time of the review, complied with the manufacturer's installation practices. The affidavit must provide the name of the manufacturer's representative witnessing the pipe installation.

**Comment [WW4]:** Considering removal or moving to install specs?

**603.6 PAVEMENT REPLACEMENT AND SURFACE RESTORATION:**

**603.6.1 Grading:** The Contractor shall do such grading in the area adjacent to backfilled trenches and structures as may be necessary to leave the area in a neat and satisfactory condition approved by the Engineer.

**603.6.2 Restoring Surface:** All streets, alleys, driveways, sidewalks, curbs, or other surfaces, in which the surface is broken into or damaged by the installation of the new work, shall be resurfaced in kind or as specified to the satisfaction of the Engineer in accordance with Section 336.

**603.6.3 Cleanup:** The job site shall be left in a neat and acceptable condition. Excess soil, concrete, etc., shall be removed from the premises.

**603.6.4 Temporary Pavement:** The Contractor shall install temporary asphalt pavement or the first course of permanent pavement replacement in accordance with Section 336 immediately following backfilling and compaction of trenches that have been cut through existing pavement. Except as otherwise provided in Section 336, this preliminary pavement shall be maintained in a safe and reasonably smooth condition until required backfill compaction is obtained and final pavement replacement is ordered by the Engineer. Temporary paving removed shall be hauled from the job site and disposed of by the Contractor at no additional cost to the Contracting Agency.

**603.7 PAYMENT:**

No pay item will be included in the proposal, nor direct payment made for trench excavation, backfilling, compaction, or placement of temporary pavement. The cost of these features of the work shall be included in the unit price per linear foot for furnishing and laying pipe.

***- End of Section -***

Case 13-15 revisions 03-19-14

## SECTION 615

## SEWER LINE CONSTRUCTION

**Formatted:** Font: Bold

### 615.1 DESCRIPTION:

The construction or extension of sewer lines shall conform to the applicable standard specifications and details, except as otherwise required on the plans or as modified in the special provisions.

~~Concrete pipe shall conform to Section 735. High density polyethylene (HDPE) pipe shall conform to Section 738. Vitrified clay pipe shall conform to Section 743. Polyvinylchloride (PVC) pipe and fittings shall conform to Section 745.~~

615.2 MATERIALS:

Pipe used for sewer line construction, including specials, joints, and gaskets, shall be according to the following Sections, or as modified by the special provisions.

- Reinforced Concrete Pipe (RCP), see Section 735
- High Density Polyethylene (HDPE) Pipe, see Section 738
- Steel Reinforced Polyethylene (SRPE) Pipe, see Section 739
- Polypropylene Pipe, see Section 740
- Vitrified Clay Pipe (VCP), see Section 743
- Polyvinylchloride (PVC) Pipe, see Section 745

**Formatted:** List Paragraph, Bulleted + Level: 1 + Aligned at: 0.25" + Indent at: 0.5"

**Formatted:** List Paragraph, Bulleted + Level: 1 + Aligned at: 0.25" + Indent at: 0.5"

### 615.~~2~~ 3 TRENCHING:

Trench excavation shall be accomplished in accordance with Sections 601 for rigid pipe and 603 for flexible pipe, except as specified below, or as modified by special provisions. ~~Excavation of trenches shall be accomplished in accordance with Sections 601, and 603 for HDPE pipe.~~

The Engineer shall furnish the Contractor alignment and elevation stakes at agreed-upon intervals and offset together with cut sheets showing the difference in elevation from the top of the stakes to the flow line of the pipe.

The trench shall be dry when the fine grading of the bottom of the trench is accomplished. Before placement of pipe the fine grade shall be carefully checked by use of a string line, laser beam, or other means so that when in final position the pipe will be true to line and grade, ±0.05 feet for 8 inches through 12 inches, ±0.10 feet for 15 inches and larger.

~~For PVC pipe installation the width of trench as listed in Table 601-1 or as given in the contract documents may be increased to provide sufficient space for the installation of fittings or for compaction of the bedding. For HDPE pipe installation, the width of the trench will be per Subsection 603.2. The adjusted maximum width at the top of the pipe must be approved by the Engineer. The adjustment of the trench width to accomplish the above shall be done at no additional cost to the Contracting Agency.~~

**Comment [WW1]:** I don't think this is needed with the new 603-1 table????

### 615.~~3~~ 4 SEPARATION:

To protect water lines from contamination by sewer lines, separation and extra protection shall be in accordance with Section 610.

Sewer lines that are constructed of ductile iron pipe for extra protection shall be internally lined for sewer service.

### 615.~~4~~ 5 LAYING PIPE:

Pipe shall be of the type, class, and size called for on the plans. All pipe shall be protected during handling against impact shocks and free falls. No damaged or defective pipe shall be installed in the work. Pipe shall be kept clean at all times, and as the work progresses, the interior of the pipe shall be cleared of all dirt and superfluous materials of every description.

The laying of the pipe shall be in finished trenches free from water or debris, and shall be commenced at the lowest point, with the spigot ends pointing in the direction of the flow. Each pipe shall be laid firmly and true to line and grade, in such manner as to form a close concentric joint with the adjoining pipe and to prevent sudden offsets of the flowline. Any adjustment to line and grade shall be made by scraping away or filling in under the body of the pipe, never by wedging or

blocking under the pipe ends.

The alignment and grade of each length of pipe shall be checked after setting by measurement from the string line, laser beam target or other means approved by the Engineer.

At all times when work is not in progress, open ends of the pipe and fittings shall be securely closed to the satisfaction of the Engineer, so that no water, earth or other substance will enter the pipe or fittings.

~~HDPE and PVC pipe and fittings shall be installed in accordance with ASTM D2321. HDPE pipe bedding shall comply with Subsection 603.4. The PVC pipe bedding shall be placed in two lifts. The first lift will be from the bottom of the trench to the spring line of the pipe. The second lift will be from the spring line to one foot above the top of pipe. Separate inspections will be required on each lift. The Contractor shall place the first lift in a manner that will insure uniform support under the haunches and proper alignment of the pipe.~~

**Comment [WW2]:** This is covered by new 603.

## SECTION 615

**615.~~5~~ 6 FITTINGS**:

All fittings shall conform to the requirements of the pipe specifications and shall be located as shown on the plans, or as directed by the Engineer, in accordance with the standard details.

**615.~~6~~ 7 JOINTING:**

**615.~~6~~7.1 Rubber Gasket Joints:** Prior to making pipe joints, all surfaces of the portions of the pipes to be joined shall be cleaned, dried, and prepared in accordance with the manufacturer's recommendations. The joints shall then be carefully centered and completed.

Trenches shall be kept water-free during the installation of joints and couplings.

The joint and coupling materials will be as specified in the appropriate pipe sections and shall be installed in accordance with the manufacturer's recommendations. Cement mortar joints will NOT be permitted in sanitary sewer construction.

**615.~~6~~7.2 Water Stops**: Water stops will be required when connecting PVC or HDPE pipe to concrete structures, manholes, etc. The water stop shall comply with Section 738 and will be installed per manufacturer recommendations.

**615.~~7~~ 8 SANITARY SEWER SERVICE TAPS:**

When the construction of sanitary sewer service taps are called for in the special provisions, they shall be constructed in accordance with standard details for sewer taps except for HDPE pipe.

To maintain structural integrity of the pipe, service taps for HDPE pipe shall be constructed in accordance with the manufacturer's recommendations.

When any damage occurs to the pipe ribs or walls, outside of the tap area, the Contractor shall perform repairs, as recommended by the manufacturer at no cost to the Contracting Agency. Damage to the pipe will include but not be limited to gouging, marring, and scratching forming a clear depression in the pipe.

The locations of the service tap for each property shall be in the downstream ⅓ of the lot, or as requested by the property owner. Sewer service taps shall not be covered until they have been plugged and marked in accordance with standard details and their location has been recorded by the Engineer. Electronic markers shall be placed at no greater depth than electronic locating devices can locate them (typically 2'-4').

**615.~~8~~ 9 SANITARY SEWER CLEANOUTS:**

The cleanouts shall be constructed at locations shown on the plans, in accordance with the standard details for cleanouts.

**615.~~9~~ 10 MANHOLES:**

Manholes shall be constructed to conform with the requirements of Sections 625, Section 505 and standard details.

**615.~~10~~ 11 BACKFILLING:**

Backfilling, and compaction shall be accomplished in accordance with Sections 601 for rigid pipe and 603 for flexible pipe, except as specified below, or as modified by special provisions. ~~Backfilling and compaction shall be done in accordance with Sections 601 and 603, for HDPE pipe.~~

615.12 JACKING PIPE: Pipe jacking shall be in accordance with Section 602 or Section 607.

**Comment [WW3]:** Dependency.

**615.~~11~~ 13 INSPECTION AND TESTING:** Testing and inspection shall be in accordance with Section 611.

~~Pressure testing of force mains shall be done in accordance with Section 610.15.~~

~~Sewers and pipe lines shall be subject to acceptance testing after backfilling has been completed but prior to the placement~~

~~of the finished surface material.~~

**SECTION 615**

~~The Contracting Agency reserves the right to require testing of the entire installation. Cost of repairs or corrections necessary to conform to the following testing requirements will be borne by the Contractor at no additional cost to the Contracting Agency.~~

~~(A) Low Pressure Air Test:~~

~~Testing will be accomplished by the means of "Low Pressure Air Testing." Tests may be conducted by the Contractor or an independent testing firm. However, acceptance tests shall be made only in the presence of the Engineer.~~

~~Test Procedure:~~

~~(1) Before testing, the pipe shall be thoroughly cleaned.~~
~~(2) The Contractor shall seal off the section of pipe to be tested at each manhole connection. Test plugs must be securely braced within the manholes.~~
~~(3) A minimum of two connecting hoses to link the air inlet test plug with an above ground test monitoring panel must be provided.~~

~~(a) One hose is to induce air through the test plug and into the test chamber.~~
~~(b) The second hose is for the purpose of monitoring the test pressure from within the enclosed pipe.~~

~~(4) UNDER NO CIRCUMSTANCES ARE WORKERS TO BE ALLOWED IN THE CONNECTING MANHOLES WHILE A PRESSURE TEST IS BEING CONDUCTED.~~
~~(5) Add air slowly into the test section. After an internal pressure of 4.0 psi is obtained, allow internal air temperature to stabilize.~~
~~(6) After stabilization period, adjust the internal air pressure to 3.5 psi, disconnect the air supply and begin timing the test.~~
~~(7) Refer to Table 615-1 to determine the length of time (minutes) the section under test must sustain while not losing in excess of 1 psi as monitored by the test gauge. If the section of line to be tested includes more than one pipe size, calculate the test time for each size and add the test times to arrive at the total test time for the section.~~
~~(8) Sections so determined to have lost 1 psi or less during the test period will have passed the leakage test. Those sections losing in excess of 1 psi during the test period will have failed the leakage test.~~
~~(9) Appropriate repairs must then be completed and the line retested for acceptance.~~

| ~~TABLE 615-1~~ | | | |
|---|---|---|---|
| ~~SANITARY SEWER AIR TEST~~ | | | |
| ~~Minimum Test Time for Various Pipe Sizes*~~ | | | |
| ~~Nominal Pipe Size, in.~~ | ~~T (time), min/100 ft~~ | ~~Nominal Pipe Size, in.~~ | ~~T (time), min/100 ft.~~ |
| ~~3~~ | ~~0.2~~ | ~~21~~ | ~~3.0~~ |
| ~~4~~ | ~~0.3~~ | ~~24~~ | ~~3.6~~ |
| ~~6~~ | ~~0.7~~ | ~~27~~ | ~~4.2~~ |
| ~~8~~ | ~~1.2~~ | ~~30~~ | ~~4.8~~ |
| ~~10~~ | ~~1.5~~ | ~~33~~ | ~~5.4~~ |
| ~~12~~ | ~~1.8~~ | ~~36~~ | ~~6.0~~ |
| ~~15~~ | ~~2.1~~ | ~~39~~ | ~~6.6~~ |
| ~~18~~ | ~~2.4~~ | ~~42~~ | ~~7.3~~ |

~~* The time has been established using the formulas contained in ASTM C828, Appendix.~~

~~(B) Hydrostatic Test:~~

~~Exfiltration Testing (water):~~

~~Sanitary sewer testing by means of exfiltration should only be considered when low pressure air testing cannot be used and only with the approval of the Engineer.~~

~~Testing Procedure:~~
~~(1) The Contractor shall furnish all equipment for testing.~~

~~(2) Seal off the downstream end of the line and fill with water to a minimum head of 4 feet in a stand pipe at the high end.~~
~~(3) A period of at least one hour will be allowed for absorption time before making the test.~~
~~(4) A suitable meter or method of measuring the quantity of water used is necessary.~~
~~(5) The allowable water loss for sanitary sewers shall not exceed 0.158 gallons per hour per 100 feet of pipe per inch of diameter of pipe under a minimum test head of 4 feet above the top of the pipe at the upper end.~~

~~(C) Deflection Test for HDPE and PVC Pipe:~~

~~In addition to the tests prescribed above, the Contractor shall perform a deflection test on the system as directed by the Engineer. Any part of the installation which shows deflection in excess of 5% of the nominal inside diameter per Section 738 for HDPE pipe or in excess of 5% of the average inside diameter per ASTM D3034 for PVC pipe, shall be corrected.~~

~~After acceptance but prior to the termination of the warranty period, the Contracting Agency may test the long term deflection of the sewer. If the Contracting Agency determines that the deflection has exceeded 7 ½% of the average inside diameter, that portion of the installation shall be corrected by the Contractor at no cost to the Contracting Agency.~~

~~(D) Closed Circuit T.V. Inspection:~~

~~The Contracting Agency reserves the right to visually inspect the interior of the sewer line using a television camera. Any defects in the pipe or construction methods revealed shall be corrected by the Contractor at no additional cost to the Contracting Agency.~~

~~The Contracting Agency will pay for the initial T.V. inspection. Any additional inspection(s) required, due to the failure of the initial inspection, shall be paid for by the Contractor.~~

**Comment [WW4]:** Moved to new Testing Section 611

**615.~~12~~ 14 PAVEMENT AND SURFACING REPLACEMENT:**

Pavement and surfacing replacement shall be done in accordance with Section 336.

**615.~~13~~ 15 CLEANUP:**

The Engineer has the right to close down forward trenching and pipe laying where testing, backfill, compaction and cleanup does not follow in an orderly manner.

**615.~~14~~ 16 MEASUREMENT AND PAYMENT:**

(A) Sewer Pipe and Fittings: ~~(Vitrified clay, cast iron and other approved types of pipe.)~~

Measurement will be made horizontally through manholes and fittings and from centerline to centerline of structures, for the various types and sizes of pipe called for on the plans and in the proposal.

Payment for the various sizes and types of pipe will be made at the unit price bid per linear foot, and shall be compensation in full for furnishing and installing the pipe and fittings complete in place, as specified, including excavation, removal of obstructions, backfilling, water settling, compaction, sheeting and bracing, testing, and all incidental work not specifically covered in other pay items.

(B) Sanitary Sewer Service Taps:

Measurement will be the number of taps installed.

Payment will be made at the unit price bid and shall be compensation in full for furnishing and installing pipe and fittings complete in place, as specified and called for on the plans and standard details, including all cost of excavation, removal of obstructions, shoring and bracing, backfilling, compaction, pavement replacement, maintenance of traffic, and all work incidental thereto.

**SECTION 615**

(C) Sanitary Sewer Cleanouts:

Measurement will be the number of cleanouts installed.

Payment will be made at the unit price bid and shall be compensation in full for furnishing and installing pipe, fittings, and frame and cover as called for on the plans and in accordance with the standard details.

***- End of Section -***

Case 13-15 revisions 03-19-14

**SECTION 618**

**STORM DRAIN CONSTRUCTION**

**618.1 DESCRIPTION:**

This section covers rigid and flexible ~~concrete pipe line and high density polyethylene (HDPE)~~ pipe line construction used for the conveyance of irrigation water and storm drainage in streets, easements, and alley right of ways, under low hydrostatic heads.

Installation of pipe in laterals of Salt River Valley Water Users' Association or other irrigation districts shall conform to the specifications and permit of the respective irrigation district.

Installation of pipe in State Highways shall conform to the specifications and permit of the Arizona Department of Transportation.

Installation of pipe under railways shall conform to the specifications and permit of the respective railway agency. ~~All pipes installed under railroad tracks shall be reinforced concrete pipe, ASTM C76, Class V and the minimum cover over all pipes shall be as specified in the railroad permit and/or special provisions. Bedding shall be in accordance with standard details.~~

**618.2 MATERIALS:**

~~The concrete pipe and HDPE p~~Pipe used for storm drain construction, including specials, joints, and gaskets, ~~and testing~~ shall be according to the following Sections, ~~620 or 735, 736 and 738, except as specified below~~ or as modified by special provisions.

- Cast-in-Place Concrete Pipe, see Section 620
- Reinforced Concrete Pipe (RCP), see Section 735
- Non-Reinforced Concrete Pipe, see Section 736
- High Density Polyethylene (HDPE), see Section 738
- Steel Reinforced Polyethylene (SRPE) Pipe, see Section 739
- Polypropylene Pipe, see Section 740
- Corrugated Metal Pipe, see Section 760

(A) Specials: Pipe specials such as closure pieces, wyes, tees, bends, and manhole shafts shall be provided as indicated on the plans, and such specials shall be made equal in strength, diameter, and other physical characteristics to the standard straight pipe lengths by the use of extra concrete, extra reinforcing, or steel items. Drawings of specials shall be submitted to the Engineer for approval before their fabrication.

(B) Rubber Gasket Joints: When rubber gasket pipe is used, the joint shall be sealed with a continuous ring gasket made of a special composition rubber of such size and cross-section as to fill the annular space provided for it. The gasket shall be the sole element depended upon to make the joint watertight, and shall have smooth surfaces, free from pits, blisters, porosity, and other imperfections.

(1) Rubber Gaskets for RCP shall be in accordance with ASTM C443 or AASHTO M-315.

(2) Rubber Gaskets for HDPE pipe shall be in accordance with Subsection 738.2.3.

(C) Water Stops: Water stops will be required when connecting HDPE pipe to concrete structures, manholes, etc. The water stop shall comply with Section 738 and will be installed per manufacturer recommendations.

(D) Cement Mortar Joints for RCP will be in accordance with Subsection 736.3.

**618.3 CONSTRUCTION METHODS:**

**Formatted:** Font: Bold

**Comment [WW1]:** Moved here from 618.3.

**Formatted:** List Paragraph, Bulleted + Level: 1 + Aligned at: 0.25" + Indent at: 0.5"

**Comment [WW2]:** Pipe specific requirements, to be moved (as required) to pipe specs in new case.

**SECTION 618**

Trench Eexcavation, bedding, backfilling, and compaction or consolidation of backfill and bedding of trenches shall be accomplished in accordance with Sections 601 for rigid pipe -and 603 for flexible for HDPE pipe, except as specified below, or as modified by special provisions.

The Contractor shall over-excavate the trench and fill with select materials in accordance with standard details.

Where the cover over the top of the pipe is less than 10 feet, the maximum trench width is unrestricted. The pay width, however, for pavement replacement shall remain in accordance with Section 336. For pipe, with 10 feet or more cover, the maximum trench width shall be as required by Sections 601 and 603 for HDPE pipe.

The laying of the pipe shall be in finished trenches free from water or debris, and shall be commenced at the lowest point, with the spigot ends pointing in the direction of the flow. Each pipe shall be laid firmly and true to line and grade, in such manner as to form a close concentric joint with the adjoining pipe and to prevent sudden off-sets of the flowline. Any adjustment to line and grade shall be made by scraping away or filling in under the body of the pipe, never by wedging or blocking under the pipe ends.

Variation from prescribed alignment and grade shall not exceed 0.10 foot and the rate of departure from or return to established grade or alignment shall be no more than 1 inch in 10 feet of pipe line unless otherwise approved by the Engineer. For closures and deflection angles greater than 10 degrees, joints shall be made by use of a bend, specially manufactured fitting, or by a concrete collar, per standard details. Pipe shall be of the type, class and size shown on the plans or in the special provisions.

All pipe, for permit construction, shall be reinforced concrete pipe, ASTM C76 Class III or HDPE pipe in accordance with ASTM F894, AASHTO 252 or AASHTO 294. For reinforced concrete pipe, the minimum cover from the top of the pipe to the finished grade shall be 2 feet and the maximum cover shall be 12 feet. The minimum and maximum cover for HDPE pipe shall be as specified in the special provisions or the manufacturer's recommendations.

All pipes installed under railroad tracks shall be reinforced concrete pipe, ASTM C76, Class V and the minimum cover over all pipes shall be as specified in the railroad permit and/or special provisions. Bedding shall be in accordance with standard details.

The allowable water loss for irrigation lines shall not exceed 2 gallons per hour per 100 feet of pipe per inch of diameter of pipe, under a minimum test head of 1 foot above the top of the pipe at the upper end when tested in accordance with the procedures of Section 615.

**618.4 JACKING PIPE:** Pipe jacking shall be in accordance with Section 602 or Section 607.

At locations where jacking is required, the storm drain line shall be installed by jacking to the lengths indicated on the plans, in accordance with the following. The methods and equipment used in jacking reinforced concrete pipe conduit shall be optional with the Contractor, provided that the proposed method is first approved in writing by the Engineer. Such approval, however, shall in no way relieve the Contractor of the responsibility for damages of any nature which might occur as a result of the methods used.

Only workmen experienced in the operation of jacking concrete conduit shall be used.

The driving ends of the conduit shall be properly protected and the conduit shall be driven true to alignment and grade. The deviation from true line and grade at any single point within the jacked portion shall be limited to 0.5 feet horizontal deviation from line and ±0.2 feet vertical deviation from grade.

Any section of conduit which may show signs of failure shall be removed and replaced with a new section of precast conduit or with a cast-in-place section, which in the opinion of the Engineer is adequate to carry the loads imposed upon it. In this respect it shall be understood that where pipe is specified on the drawings to be jacked into place the jacked pipe shall be reinforced concrete of the strength specified in these specifications and the design of such pipe

**Comment [WW3]:** Delete or if needed, move to 601/603.

**Comment [WW4]:** Delete – not standard.

**Comment [WW5]:** Move to new Testing Section 611, if needed.

**Comment [WW6]:** Dependency

**Formatted:** Font: Not Bold

**Formatted:** Font: Not Bold

~~is based upon superimposed loads and not upon loads which may be placed upon the pipe as a result of jacking operation. Any increase in pipe strength required in order to withstand jacking loads shall be the responsibility of the Contractor. The reinforcing shall be circular and of either single or double cage design.~~

~~Spacer blocks shall be placed in the inside circular space which will allow sufficient width for point mortaring when jacking is completed and to equalize pressures during jacking. Three grout holes per 8-foot section of pipe shall be made during manufacturing.~~

~~Double rubber gaskets and band type joints shall be provided for 36 inches diameter and larger pipe.~~

~~One hole shall be made on the top midway between the ends. Two additional holes, each approximately 1.5 feet from each end and approximately midway between the springline and top on opposite sides shall be made.~~

~~Where the nature of the soil, or the structure under which the conduit is being jacked is such that, there is increased danger of a cave-in or damage to said structure, the method of jacking the conduit shall be as specified below.~~

~~The leading section of conduit shall be equipped with a jacking head securely anchored thereto to prevent any wobble or alignment variation during jacking operations. The length and details of the jacking head shall be subject to the written approval of the Engineer. Excavation shall be carried out entirely within the jacking head and no excavation in advance thereof will be permitted. Every effort shall be made to avoid any loss of earth outside of the jacking head. Excavated material shall be removed from the conduit as excavation progresses, and no accumulation of such material within the conduit will be permitted.~~

~~Upon completion of the jacking operations, all voids around the outside face of the conduit shall be filled by grouting through each of the previously constructed grout holes to the satisfaction of the Engineer. The grout shall be a mixture of one part cement to three parts sand and a mixture by volume.~~

~~Grouting equipment and material shall be on the job before jacking operations are started in order that grouting around the jacked conduit may be started immediately after the jacking operation. After grouting, the holes in the conduit shall be repaired to the satisfaction of the Engineer.~~

**618.5 ~~VIDEO~~ INSPECTION AND TESTING~~OF NEW MAINLINE STORM DRAINS~~:** Testing and inspection shall be in accordance with Section 611.

~~The Contractor shall provide the Engineer with an annotated video inspection record (either VHS or DVD format) of the new mainline storm drain pipeline. The video shall clearly show all joints, seals, connecting pipes, and manholes. This video shall be provided to the Engineer, and reviewed and approved by the Engineer prior to the Contractor being allowed to place the final pavement over the storm drain line. No separate payment will be made for this inspection; the cost of the video inspection shall be included in the cost of the pipe.~~

**618.6 MEASUREMENT AND PAYMENT:**

(A) Main Line Pipe: ~~Shall be the number of linear feet of pipe laid as measured along the pipe axis.~~

Measurement shall be the number of linear feet of pipe laid as measured along the pipe axis.
Unless hereinafter modified, measurement shall extend through manholes when no change in pipe size occurs. When a change in pipe size occurs within a manhole, unless hereinafter modified, measurement for each size will be taken to the centerline of the manhole.

Payment will be at the unit price bid per linear foot, to the nearest foot, for each size and type of pipe and shall be compensation in full for furnishing and installing the type of pipe as specified and as shown on the plans including removal of obstructions, excavation, bedding, backfilling, compacting, testing, joint materials, joining, collars, and field closures.

(B) Connecting Pipe:

**Comment [WW7]:** Move as needed to Section 602.

**Comment [WW8]:** Removing in favor of new Section 611 (dependent).

**Comment [WW9]:** Making consistent with 615.

**SECTION 618**

Measurement ~~S~~shall be the number of linear feet of pipe installed, as measured along the pipe axis from a main line pipe, or a manhole, or a catch basin to a catch basin, or a plugged end, and shall include the portions of the connecting pipe embedded in the above structures.

Payment will be at the unit price bid per linear foot, to the nearest foot for each size of pipe and shall be compensation in full for furnishing and installing complete in place as shown on the plans and as specified, the connecting pipe and specials including spur connections, removal of obstructions, excavation, bedding, backfilling, compacting, joint materials, joining, collars, field closures, and testing.

~~(C) Jacked Pipe: Shall be made at the ground surface and shall be the number of linear feet of ground surface undisturbed by the cut and cover construction on either side of the jacked section.~~

**Comment [WW10]:** Move to Section 602.

~~**618.7 PAYMENT:**~~

~~(A) Main Line Pipe: Will be paid at the unit price bid per linear foot, to the nearest foot, for each size and type of pipe and shall be compensation in full for furnishing and installing the type of pipe as specified and as shown on the plans including removal of obstructions, excavation, bedding, backfilling, compacting, testing, joint materials, joining, collars, and field closures.~~

~~(B) Connecting Pipe: Will be paid at the unit price bid per linear foot, to the nearest foot for each size of pipe and shall be compensation in full for furnishing and installing complete in place as shown on the plans and as specified, the connecting pipe and specials including spur connections, removal of obstructions, excavation, bedding, backfilling, compacting, joint materials, joining, collars, field closures, and testing.~~

~~(C) Jacked Pipe: Will be paid the same as for main line pipe.~~

***- End of Section -***

**CITY OF BUCKEYE**

Engineering Department

Case Number: 13-21

**Date**: 07-25-13

**To**: MAG Specifications and Details Committee

**From**: Craig Sharp

**RE**: Section 742 Pre Cast Manhole Bases

**Purpose**: Creating a new section and details for pre-cast manhole bases and modifying the existing cast in place manhole detail No. 420-1, 420-2, 421 and 422.

**Revisions**:

Creating a new section and details for pre-cast manhole bases and modifying existing details.

## SECTION 742

## PRE CAST MANHOLE BASES

### 742.1 GENERAL:

This specification covers the requirements of pre cast manhole bases for gravity sanitary sewer. When noted on the plans or in the special provisions pre cast manhole bases shall be constructed according to this specification. All pre cast manhole base manufacturers shall be NPCA (National Pre Cast Association) certified and shall provide all certifications upon request. Loading criteria for the pre cast base shall meet or exceed the AASHTO 1120 loading requirements. All pre cast manhole bases and risers shall be monolithically cast to ensure water tightness and have a certified structural design. An anti-float ring shall be cast with the base and riser during manufacturing.

### 742.2 MATERIALS:

**742.2.1 Cementitious Materials:** Cementitious materials shall conform to Section 725.2 and shall have a minimum compressive strength after 28 days of 4000 PSI.

**742.2.2 Pre Cast Sections:** Pre Cast sections shall conform to ASTM C478, AASHTO M199

**742.2.3 Joints and Connections:** Joints and connections shall conform to ASTM C425, C990 and C923.

### 742.3 CASTING TYPES:

All pre cast manhole bases shall be cast using either a dry cast or a wet cast system. Each manufacturer shall be proficient in their manner of casting and shall monitor and test the materials being used in the casting. The test results shall be available upon request by the contracting agency.

**742.3.1 Wet Castings:** Wet casting shall consist of pouring thoroughly mixed cementitious materials in its plastic form into a pre determined mold the size and shape required per the drawings or special provisions. Concrete shall be placed in forms and vibrated in such a manner to make a dense uniform product conforming to the plans and specifications.

**742.3.2 Dry Castings:** Dry casting shall consist of casting the base utilizing mechanized equipment with a zero (0) slump concrete between the core and jacket. Curing shall be by a kiln or a combination of tarps and moisture curing.

### 742.4 CUT OUT/KNOCK OUT:

Cut out of the precast base shall be done using a mechanical whole saw. The location of the whole shall be determined by the plans and specifications. After the core is removed from the casting the manufacturer shall coat all reinforcing with a corrosion inhibiting epoxy suitable for end use application. The thickness of the epoxy shall be per the manufacturer recommendation suitable for the end use application. Knock outs shall be formed in the location noted on the plans or specifications.

### 742.5 REINFORCING

Reinforcing for the base shall meet the following specifications:

- Wire ASTM A82 or A496
- Wire fabric A185 or A497

Design of the reinforcing shall be in accordance with ACI 318 and ASTM C890

### 742.6 GASKETS

A flexible pipe to manhole connector shall be used whenever a pipe penetrates into a pre cast concrete manhole or structure. The design of the connector shall provide a flexible, watertight seal between the pipe and the concrete. The connector shall assure that a seal is made between the structure wall and the pipe by:

- casting the connector integrally with the structure wall during the manufacturing process in a manor that will not pull out during pipe coupling.
- compressing the connector against the inside circumference of the structure by means of wedge or toggle style connection, expansion ring or other means approved by the engineer.

The connector shall be made of from materials that conform to the physical and chemical requirements outlined in the ASTM C923, and

The connector shall be sized specifically for the type of pipe being used and shall be installed in accordance with the recommendations of the manufacturer.
The connection hardware shall be constructed of a 316 stainless steel meeting ASTM A480. The hardware shall ensure a water tight connection between the concrete and the pipe material and shall provide an adequate seal enough to withstand the negative air pressure test per ASTM C-1244.

**742.7 LIFTING DEVICES**

Lifting devices shall be designed and evaluated by a registered professional engineer and have a minimum safety factor of 4. There shall be a minimum of 2 lifting points on every pre cast manhole base. After base installation, the lifting holes shall be thoroughly packed with a pre-packaged non-shrink grout. Bent reinforcing steel bars shall not be used as lifting devices. Through lifting holes will not be allowed.

**742.8 IMPERFECTIONS**

**742.8.1 Imperfections:** Any imperfections which in the opinion of the engineer may adversely affect the performance of the pre cast base shall be cause for rejection.

***-End of Section –***

## TYPE 'A' TOP

(PRE-CAST ECCENTRIC CONICAL TOP M.H.)

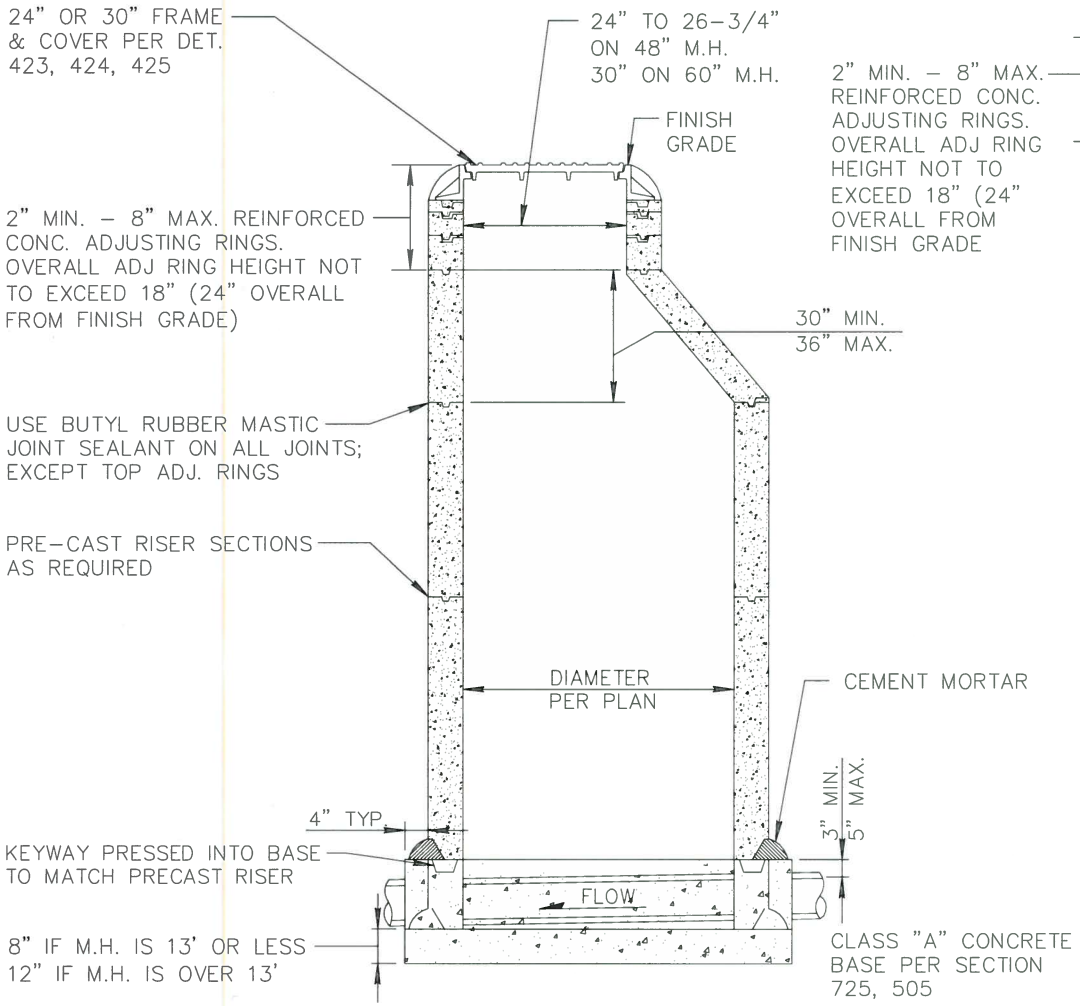


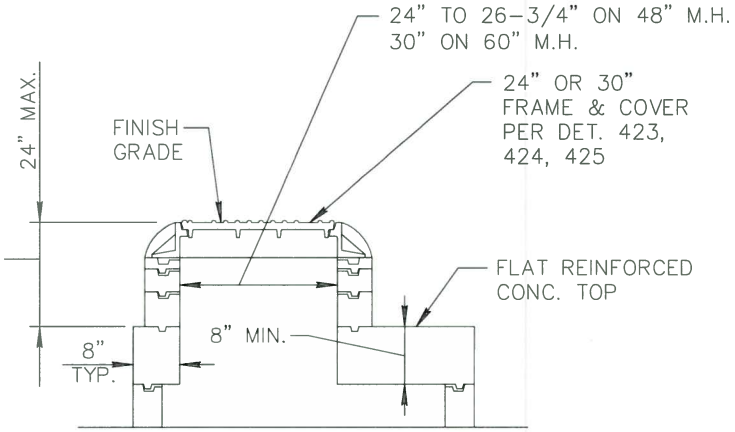


(PRECAST FLAT TOP M.H.)

NOTES:

1. PRE-CAST, STEEL REINFORCED M.H. SECTIONS SHALL BE MANUFACTURED IN ACCORDANCE WITH ASTM C 478 EXCEPT AS MODIFIED HEREIN.
2. USE LOW ALKALI CEMENT ONLY.
3. CAST-IN-PLACE M.H. BASE TO BE CONSTRUCTED IN ONE PLACEMENT.
4. CAST-IN-PLACE MH BASE SHELF AND CHANNEL TO RECEIVE SMOOTH TROWEL FINISH.
5. M.H. COATINGS PER AGENCY.
6. SEE MAG DETAIL 422 FOR FINAL ADJUSTMENT TO GRADE.
7. ANY MANHOLE OVER 20' SHALL REQUIRE ENGINEER (STRUCTURAL) CALCS.
8. THE MANHOLE ACCESS POINT SHALL BE ORIENTED IN SUCH A AWAY THAT THE OPENING IS DIRECTLY ABOVE THE LOWEST INVERT.
9. FLAT TOP MANHOLE TO BE USED UPON DIRECTION OF THE ENGINEER.
10. FOR PRE-CAST BASE SEE DETAIL 420-2.

| DETAIL NO. | | | | REVISED | DETAIL NO. |
|---|---|---|---|---|---|
| 420-1 | MARICOPA ASSOCIATION of GOVERNMENTS | STANDARD DETAIL ENGLISH | PRE-CAST CONCRETE SEWER MANHOLE | 01-01-2015 | 420-1 |

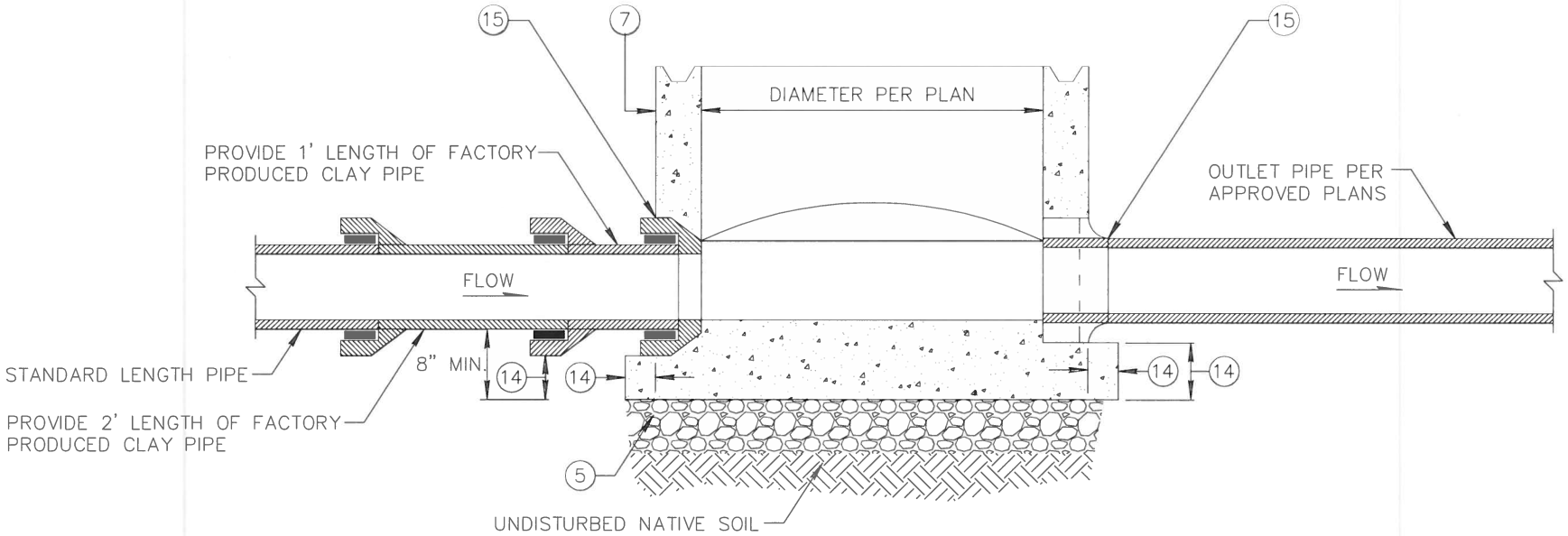


NOTES:

1. PRE-CAST, MANUFACTURER SHALL BE AN NPCA CERTIFIED PLANT.
2. MAG "AA" 4000 PSI CONCRETE SHALL BE USED FOR MANHOLE BASES PER ASTM C478.
3. SPRING LINE OF CAST-IN-PLACE BELL SHALL STOP AT INSIDE FACE OF MANHOLE.
4. JOINTS FOR BARREL SECTION SHALL BE TONGUE AND GROOVE OR LAP JOINT. ALL LIFTING HOLES SHALL BE SEALED WITH NON METALLIC NON-SHRINK GROUT.
5. ALL PRECAST MANHOLE BASES SHALL BE PLACED ON 10" MINIMUM OF #57 CRUSHED ROCK PER ASTM D448 OR 8" MINIMUM ABC COMPACTED TO 100% RELATIVE DENSITY.
6. ALL MODIFICATIONS SHALL BE APPROVED BY THE ENGINEER.
7. MINIMUM WALL THICKNESS SHALL BE 5".
8. REINFORCEMENT SHALL BE DESIGNED BY AN ARIZONA REGISTERED PROFESSIONAL ENGINEER.
9. CHANNEL WIDTH SHALL REMAIN CONSTANT THROUGH THE MANHOLE BASE, AS PER DETAIL 420-3.
10. THERE SHALL BE NO HARD CONNECTIONS (GROUTED) INTO THE MANHOLE BASE UNLESS APPROVED BY THE ENGINEER.
11. ALL SEWER SERVICE CONNECTIONS SHALL HAVE THE SAME CONNECTION TYPES IN THE PRE-CAST MANHOLE BASE.
12. ALL CORE HOLES INTO THIS STRUCTURAL PRE-CAST BASE SHALL BE COATED WITH APPROVED COATING MATERIAL.
13. ENTIRE PRE-CAST BASE SHALL BE MANUFACTURED AT THE PLANT.
14. THE MINIMUM ANTI-FLOAT RING SHALL BE 6" WIDE ON 48" BASES, 7" WIDE ON 60" BASES, AND 8" WIDE ON 72" BASES. ANTI-FLOAT RING SHALL BE A MINIMUM OF 5" THICK.
15. ALL PIPE CONNECTIONS SHALL BE RUBBER GASKET/BOOT PER ASTM C425. ADDITIONALLY, A POLYURETHANE JOINT MAY BE USED ON VCP.

| DETAIL NO. | | | | REVISED | DETAIL NO. |
|---|---|---|---|---|---|
| 420-2 | MARICOPA ASSOCIATION of GOVERNMENTS | STANDARD DETAIL ENGLISH | PRE-CAST CONCRETE MANHOLE BASE | 01-01-2015 | 420-2 |

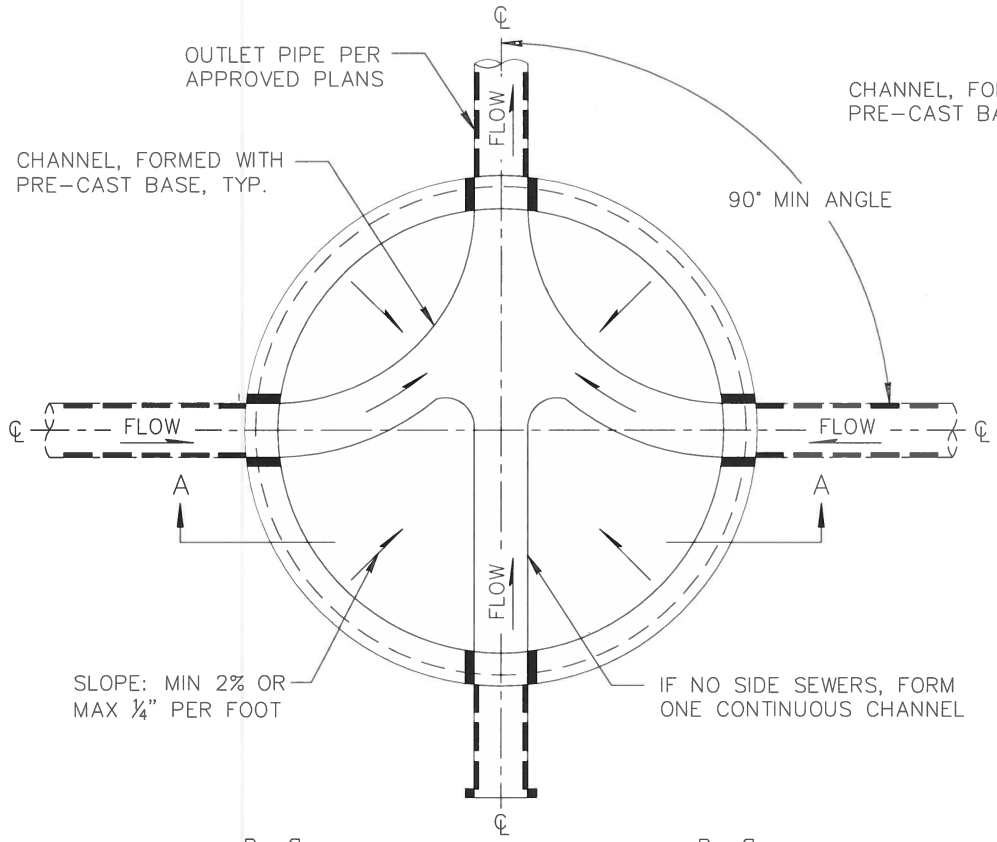


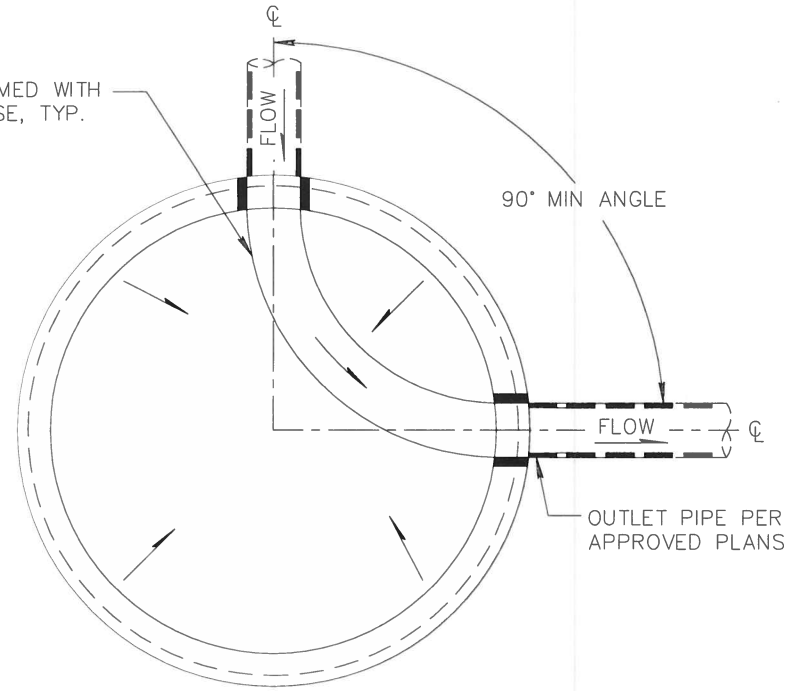


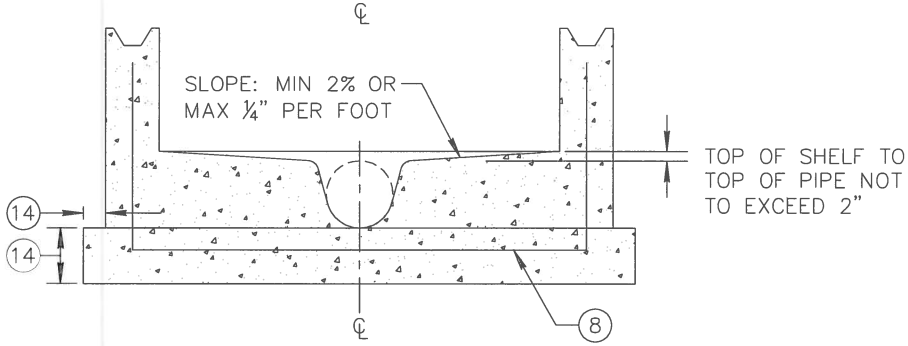


SECTION A–A

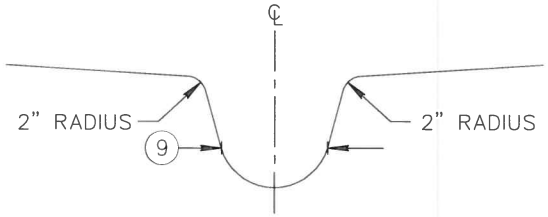


MINIMUM CHANNEL DEPTH AND WIDTH SHALL BE THE SAME AS THE OUTLET PIPE SIZE.

TYPICAL CHANNEL

SEE DETAIL 420–2 FOR NOTES

| DETAIL NO. | | | | REVISED | DETAIL NO. |
|---|---|---|---|---|---|
| 420-3 | MARICOPA ASSOCIATION of GOVERNMENTS | STANDARD DETAIL ENGLISH | PRE-CAST CONCRETE MANHOLE BASE | 01-01-2015 | 420-3 |

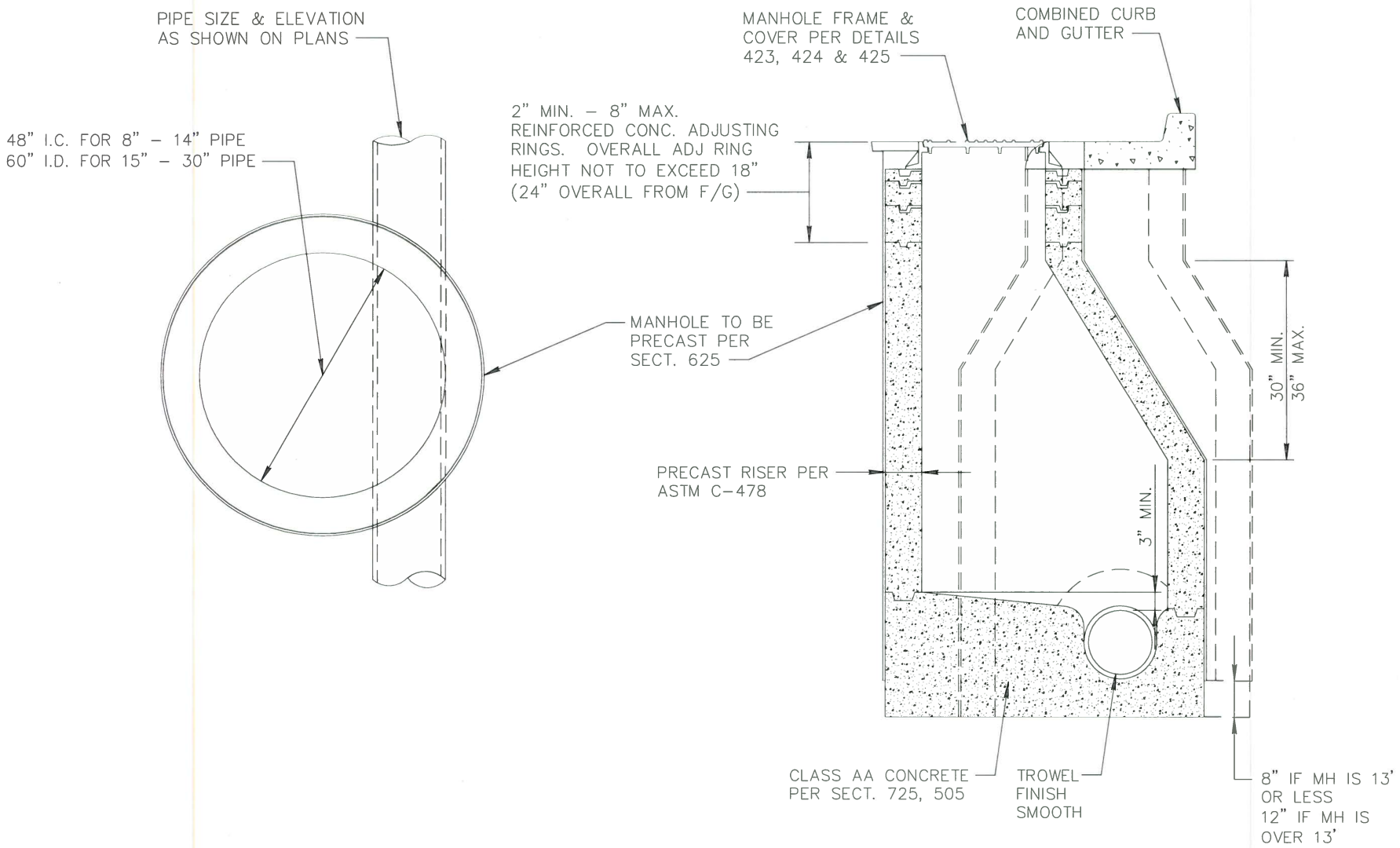


| DETAIL NO. | | | | REVISED | DETAIL NO. |
|---|---|---|---|---|---|
| 421 | MARICOPA ASSOCIATION of GOVERNMENTS | STANDARD DETAIL ENGLISH | OFFSET MANHOLE 8" TO 30" PIPE | 01-01-2015 | 421 |

NOTES:

1. CONTRACTORS SHALL ADJUST ALL MANHOLE RINGS AND COVERS, INCLUDING MANHOLES OUTSIDE OF THE PAVEMENT.

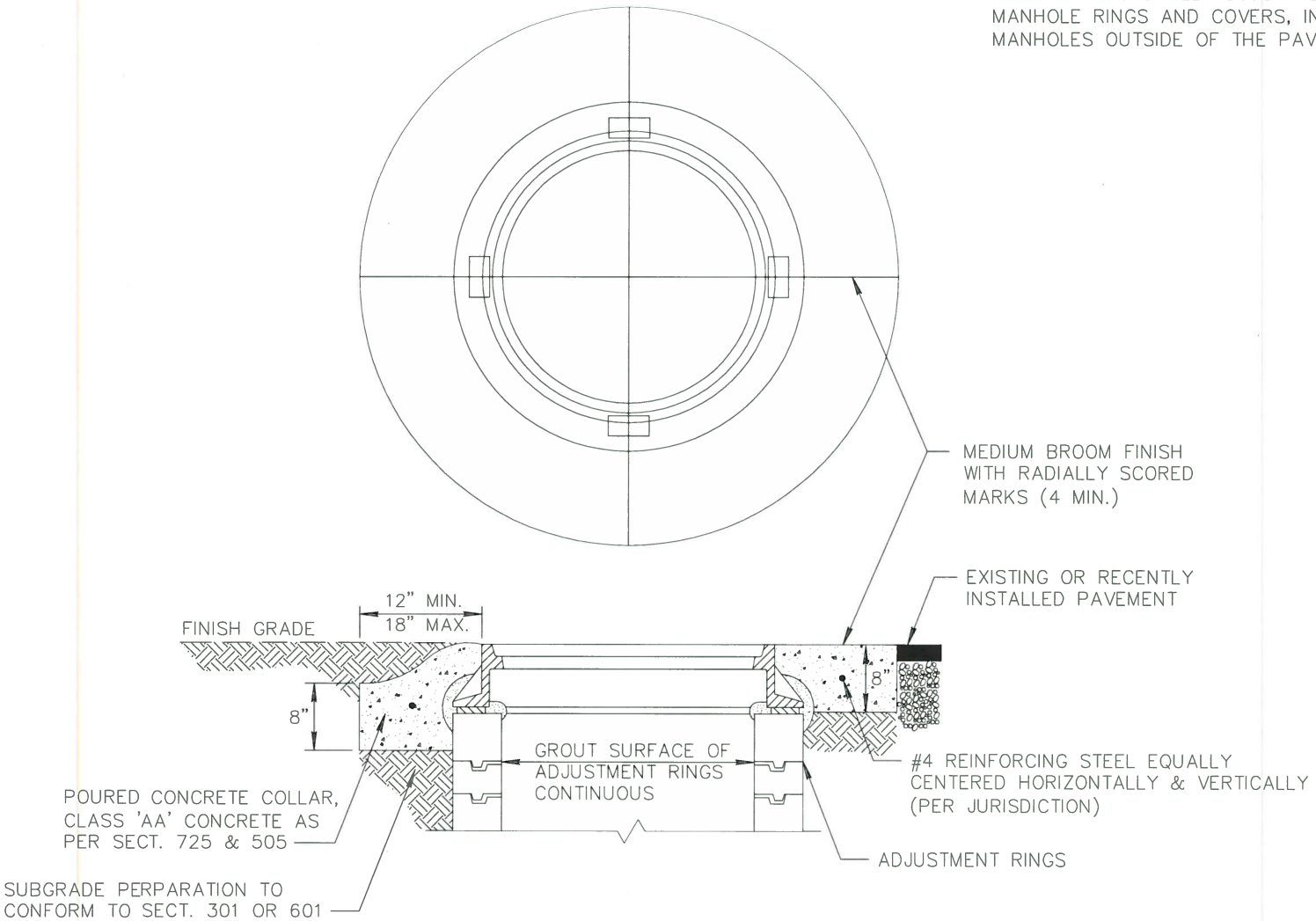


| DETAIL NO. | | | | REVISED | DETAIL NO. |
|---|---|---|---|---|---|
| 422 | MARICOPA ASSOCIATION of GOVERNMENTS | STANDARD DETAIL ENGLISH | MANHOLE FRAME AND COVER ADJUSTMENT | 01-01-2015 | 422 |

**CITY OF BUCKEYE**

Engineering Department

Case Number: 13-22

**Date** : 06-05-13

**Revised**: 08-21-13

**To**: MAG Specifications and Details Committee

**From**: Craig Sharp

**RE**: Section 625 - Manhole construction and drop sewer connections

Section 775 – Bricks and masonry units

**Purpose**: Deleting references to bricks and steps in manholes

**Revisions**:

This revision is to delete references for the use of bricks and steps in sanitary sewer manholes.

## SECTION 625

## MANHOLE CONSTRUCTION AND DROP SEWER CONNECTIONS

### 625.1 DESCRIPTION:

**625.1.1 Sewer Manholes:** Construction shall consist of furnishing all materials and constructing manholes complete in place, as detailed, including foundation walls, ~~cast iron steps,~~ manhole frames, covers, and any incidentals thereto, at locations shown on the plans.

**625.1.2 Drop Sewer Connections:** Construction shall consist of furnishing all materials and constructing drop sewer connections complete in place as detailed, including foundation materials, pipe, and any incidentals thereto, at locations shown on the plans.

### 625.2 MATERIALS:

Unless otherwise shown on the plans or specified in the special provisions, materials to be used shall conform with the following:

Bricks for manholes ~~Section 775~~shall not be used.

Cement mortar for manholes Class D, Section 776.

Concrete for manholes Class A, for drop sewer connection Class C, Section 725.

Pipe used in manholes or drop sewer connections shall comply with pipe requirements of Section 615.

Manhole frame, cover ~~and steps~~ Section 787 and cast in accordance with standard details.

~~Plastic manhole steps, which conform to O.S.H.A. and A.S.T.M. C 487 requirements, and steel manhole steps, which are completely encapsulated in corrosion resistant rubber and conform to O.S.H.A. and A.S.T.M. C 478 requirements, may be substituted for cast iron manhole steps. The manufacturer shall furnish the Engineer a certification indicating conformance.~~
Manhole steps shall not be used.

### 625.3 CONSTRUCTION METHODS:

**625.3.1 Manholes:** Manholes shall be constructed ~~of brick,~~ of precast concrete sections, ~~or of~~ cast in place concrete, ~~with cast iron manhole steps~~, and frames and covers, in accordance with the standard details. The invert channels shall be smooth and semi-circular in shape, conforming to the inside of the adjacent sewer sections. Changes in direction of flow shall be made with a smooth curve, having a consistent radius as large as the manhole will permit with no angel points. Changes in size and grade of the channels shall be made gradually, ~~and~~ evenly, and uniformly throughout the manhole base.

Invert channels ~~may~~ shall be formed of concrete and ~~or brick masonry~~ have~~ing~~ a smooth mortared surface, may be half tile laid in concrete ~~or brick,~~ or may be constructed by laying full section of sewer pipe through the manhole and breaking out the top half after the surrounding concrete ~~or brick masonry~~ has hardened. The ~~floor~~ bench of the manhole outside the channels shall be smoothed and shall slope towards the channels.

The excavation shall be in such a manor, access is maintained around the manhole base before, during, and after placement of the manhole. ~~made cylindrical to a diameter sufficient in size to permit sheeting if necessary and leave room that the bricks may be laid in a workmanlike manner and the outside mortar coat properly applied or the precast concrete sections or forms may be properly assembled.~~

A concrete foundation of Class A concrete shall be poured in accordance with the Standard Details and Section 505.

~~Brickwork shall not be laid upon a concrete foundation less than 24 hours after such foundation has been poured. No brickwork shall be laid in water, nor, except as prescribed for curing, shall water be allowed to stand or run on any brickwork until the mortar has thoroughly set. Where new work is joined to existing unfinished work, the contact surfaces of the latter shall be thoroughly cleaned and moistened.~~

~~Bricks shall be thoroughly moistened prior to placing, and shall be laid in full cement mortar beds. Every course may be a header course, but at least every fourth course shall be a header course. The horizontal cross section of the manhole shall be circular unless otherwise called for on the plans or standard details. An oval or egg shaped section will not be permitted. A double row lock course of brick in the manhole wall shall be arched over the top half of the circumference of all inlet and outlet pipes. The brick manholes shall be mortared outside with ½ inch of cement mortar as shown on the standard details. Inside of brick wall shall be neatly pointed. The mortar coat shall be cured with a liquid membrane forming compound conforming with Section 726 immediately after mortar has been placed and finished.~~

Frame and Cover. All machined surfaces on the frame and cover shall be such that the cover will lie flat in any position in the frame and have a uniform bearing through its entire circumference. Any frame and cover which creates any noise when passed over by automobiles shall be replaced. Frames shall be set firmly in a bed of mortar true to line and grade, all as shown on the plans and as called for in these specifications.

Backfilling shall be done in accordance with the requirements for trench backfilling as stated in Section 601.

**625.3.2 Drop Sewer Connections:** Drop sewer connections shall be constructed in conformance with standard details, as the case may be.

Backfilling shall be done in accordance with the requirements for trench backfilling as stated in Section 601.

**625.4 MEASUREMENT:**

Measurement will be per manhole installed, complete in place, regardless of depth.

**625.5 PAYMENT:**

Payment will be made at the contract unit price ~~bid~~ for each accepted manhole, and shall be compensation in full for furnishing and installing manhole, complete, with formed or pre-cast inverts, concrete foundation, sanitary sewer drop connections ~~ladder rungs,~~ sheeting and bracing, removal of obstructions cast iron frame and cover, excavation and backfill, paving cut replacement in excess of the applicable pay widths authorized in Section 336, and any incidentals thereto, in conformance with the plans and specifications.

~~Payment will be made at the unit price bid each, and shall be compensation in full for furnishing and installing vitrified clay pipe sanitary sewer drop connections, concrete encasement, excavation, backfilling, water settling, compaction, sheeting and bracing, removal of obstructions, paving cut replacement, in excess of the applicable pay widths authorized in Section 336, testing, and all work incidental thereto in conformance with the plans and specifications.~~

***- End of Section -***

## SECTION 775

## BRICK AND CONCRETE MASONRY UNITS (BLOCKS)

### 775.1 BRICK:

Brick shall be whole, sound, and hard burned and shall give a clear ringing sound when struck together. They shall be uniform in quality and shall be culled or sorted before delivery to the work.

**775.1.1 ~~Manhole~~ Brick:** ~~Sewer and water manhole b~~Brick shall conform, except for dimensional tolerances, to the requirements of ASTM C32, Grade MM.

~~Manhole b~~Brick shall conform to Table 775-1.

| TABLE 775-1 | | | |
|---|---|---|---|
| ~~MANHOLE~~ BRICK DIMENSIONS | | | |
| **Brick** | **Inches Depth** | **Inches Width** | **Inches Length** |
| Standard Size<br>Allowable Variations | 2 1/4<br>±1/8 | 3 1/2<br>±1/8 | 7 1/2<br>±1/4 |

The following paragraphs shall be added to the section on visual inspection:

No individual brick shall be rejected unless it shows visual evidence of major cracking. A major crack is defined as one that has at least one complete separation, for a distance of 1 3/4 inches, through the brick in any direction, including any cored area. Such a crack shall be regarded as affecting the serviceability of the brick and shall be rejected and not used in the structure.

Fifty bricks may be sampled at random intervals from any cube for visual inspection. Of the 50 samples, 45 must pass visual inspection for major cracks. Should less than 45 pass, the cube of brick shall be rejected and the brick must not be used in the structure.

**775.1.2 Building Brick:** Building brick shall conform to the requirements of ASTM C62, grade MW.

**775.1.3 Facing Brick:** Facing brick shall conform to the requirements of ASTM C216, Grade MW, Type FBS. The size, color, and texture shall be as specified on the plans or as approved by the Engineer.

### 775.2 CONCRETE MASONRY UNITS:

Unless otherwise noted on the plans or special provisions, concrete masonry units shall conform to ASTM C90, Normal Weight, Type I with a minimum compressive strength of 1900 psi.

The units shall be fully cured and shall have been made not less than 28 days prior to delivery.

The moisture content at the time of delivery shall not exceed 30 percent of the minimum absorption value of the units. The Contractor shall provide any protection he deems necessary to maintain the units in this condition until time of use.

The linear change from saturated to cool oven dry shall not exceed 0.0054 inches per linear foot or 0.045 of 1 percent conducted in accordance with test method in ASTM C426.

The units shall be made with normal weight aggregate conforming to ASTM C33.

The nominal size of the units shall be as indicated on the plans. The overall dimensions for width, height and length shall differ by not more than ±1/8 inch from the specified standard dimensions. Standard dimensions of units are the manufacturer's designated dimensions. Nominal dimensions of units are equal to the standard dimensions plus the thickness of one mortar joint.

No less than 5 samples of the units shall be submitted to the Engineer for approval and to show the full variance of texture and full range of color. Units used in the work shall match the approved samples. These samples may be tested for strength.

All units shall be sound and free of cracks or other defects that would interfere with the proper placing of the unit or would significantly impair the strength or permanence of the construction. When units are to be used in an exposed setting, the face or faces that are to be exposed shall not show chips or cracks, not otherwise permitted, or other imperfections when viewed from a distance of not less than 6 feet under diffused lighting.

Units that are intended to serve as a base for plaster or stucco shall have a sufficiently rough surface to afford a good bond.

***End of Section -***

**MARICOPA COUNTY**
*Department of Transportation*

**MEMORANDUM**

**Date:** January 8, 2014

**To:** MAG Specifications and Details Committee

**From:** Robert Herz, MCDOT Representative

**Subject:** Revision to Section 405 MONUMENTS and Detail 120 **Case 14-02**
**Revised 2014-03-25**

**PURPOSE:** Update specification to match current details and requirements.
Add note to Type B Monument in Detail 120 to have the depth recessed six inches below finished grade when located in an unpaved roadway or alley.

**REVISION:** See proposed revised detail 120 and the attached redlined strike-out version of the specification for revisions followed by the proposed modified specification in final form.

2901 West Durango Street Phoenix, Arizona 85009 Phone: 602-506-4760 Fax: 602-506-5969

# SECTION 405

## SURVEY MONUMENTS

### 405.1 DESCRIPTION:

This work shall consist of furnishing and installing ~~Portland cement concrete right-of-way monuments and~~ survey monuments at the locations shown on the plans or directed by the Engineer ~~and as specified~~.

Monuments shall conform to the standard details or details shown on the plan.

### 405.2 MATERIALS:

The concrete portion of monuments shall be constructed in accordance with the provisions in Sections 725 and 505.

Concrete shall be Class B.

Brass caps for survey monuments ~~will~~ shall be furnished by the Contractor unless otherwise specified ~~in the special provisions~~.

### 405.3 CONSTRUCTION:

~~In constructing precast monuments, the forms shall not be removed until after the concrete has hardened. Monuments that are warped will be rejected. The exposed surface of the finished monuments shall be uniform, of even texture, and shall be free from holes, cracks and chipped edges. The precast monuments shall not be transported to the work site until the concrete has cured.~~

Cast in place monuments shall be cast in drilled holes without the use of forms.

Survey monuments shall be set vertically in the ground.

The brass cap~~s~~ assembly shall be firmly embedded in the concrete cylinder ~~placed in survey monuments~~ before the concrete ~~block~~ has acquired its initial set ~~and shall be firmly bedded in the concrete~~. The concrete ~~block~~ cylinder shall be so located that, the reference point will fall within a 1 inch circle in the center of the brass cap.

~~**405.4 INSTALLATION:**~~

~~Right-of-way monuments shall be set firmly and vertically in the ground to a depth of at least 3 feet.~~

The tops of survey monument covers shall be set flush with the pavement surface.

~~Survey monuments shall be set in position after the first course of asphalt concrete.~~

### 405.4 MEASUREMENT:

Survey monuments will be measured by the number of units of each type of monument constructed and accepted.

**405.5 PAYMENT:**

Payment for monuments will be at the contract unit price~~made on the basis of the prices bid~~ and shall include full compensation for furnishing all labor, materials, tools, equipment and incidentals, and for doing all the work involved in constructing the monuments, complete in place, ~~including asphalt seal and necessary excavation and backfill,~~ as shown on the plans or as directed by the Engineer.

***– End of Section –***

PROPOSED SPECIFICATION IN FINAL FORM:

# SECTION 405

# SURVEY MONUMENTS

## 405.1 DESCRIPTION:

This work shall consist of furnishing and installing survey monuments at the locations shown on the plans or directed by the Engineer.

Monuments shall conform to the standard details or details shown on the plan.

## 405.2 MATERIALS:

The concrete portion of monuments shall be constructed in accordance with the provisions in Sections 725 and 505. Concrete shall be Class B.

Brass caps for survey monuments shall be furnished by the Contractor unless otherwise specified.

## 405.3 CONSTRUCTION:

Cast in place monuments shall be cast in drilled holes without the use of forms.

Survey monuments shall be set vertically in the ground.

The brass cap assembly shall be firmly embedded in the concrete cylinder before the concrete has acquired its initial set. The concrete cylinder shall be so located that, the reference point will fall within a 1 inch circle in the center of the brass cap.

The tops of survey monument covers shall be set flush with the pavement surface.

## 405.4 MEASUREMENT:

Survey monuments will be measured by the number of units of each type of monument constructed and accepted.

## 405.5 PAYMENT:

Payment for monuments will be at the contract unit price and shall include full compensation for furnishing all labor, materials, tools, equipment and incidentals, and for doing all the work involved in constructing the monuments, complete in place, as shown on the plans or as directed by the Engineer.

***- End of Section -***

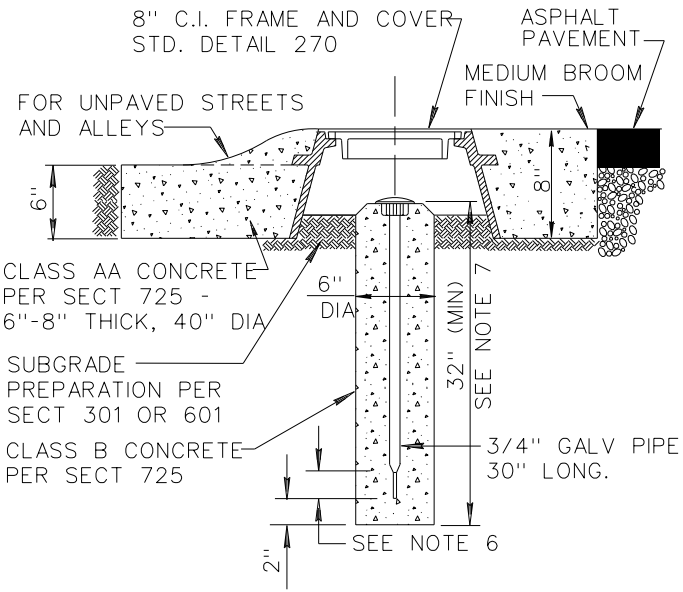


## TYPE 'A'

(WITH FRAME)

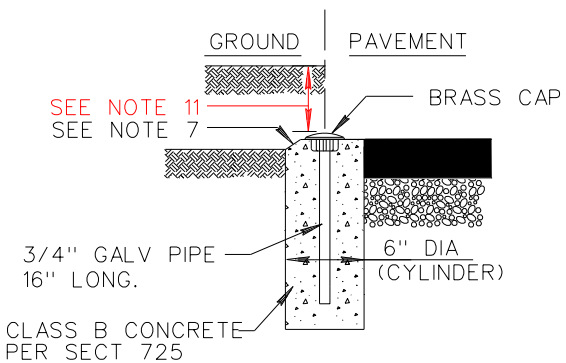


## TYPE 'B'

(WITHOUT FRAME)

## NOTES:

1. TYPE 'A' TO BE USED AT INTERSECTIONS OF MAJOR STREETS & COLLECTOR STREETS, SECTION CORNERS, SECTION 1/4 CORNERS, CENTER OF SECTIONS, AND AT OTHER POINTS AS SHOWN ON PLANS.
2. TYPE 'B' TO BE USED (EXCEPT WHERE TYPE 'A' IS SPECIFIED) AT INTERSECTION OF STREET CENTERLINES, PC'S, PT'S AND PI'S OF CURVES, SECTION 1/16 CORNERS, SUBDIVISION CORNERS, CHANGE IN ALIGNMENT OF SUBDIVISION BOUNDARIES, AND AT OTHER POINTS AS SHOWN ON PLANS.
3. TYPE 'C' TO BE USED AT CORNERS OF AND CHANGE IN ALIGNMENT OF SUBDIVISION BOUNDARIES WHERE CORNERS OR CHANGES IN ALIGNMENT FALL OUTSIDE OF PAVED AREAS OR UNPAVED ALLEYS AND STREETS.
4. CAP TO BE CONSTRUCTED OF RED BRASS OR BRONZE.
5. LETTERS TO BE APPROX. 1/32" WIDE & 1/32" DEEP.
6. FLATTENING THE BOTTOM 2" OF THE GALVANIZED PIPE IS OPTIONAL.
7. TOP OF CONCRETE POST IS CHAMFERED 3/4" EXCEPT WHEN SET FLUSH WITH PAVEMENT.
8. THE CAP SHALL SHOW THE POINT SURVEYED BY A PUNCH MARK OR SCRIBED CROSS AND THE CAP SHALL BE STAMPED WITH THE YEAR AND THE REGISTERED LAND SURVEYOR'S (RLS) REGISTRATION NUMBER.
9. WHEN APPLICABLE, THE CAP SHALL BE STAMPED WITH THE APPROPRIATE PUBLIC LAND MARKING PER CURRENT MANUAL OF INSTRUCTIONS FOR THE SURVEY OF PUBLIC LANDS OF THE UNITED STATES, PREPARED BY THE BUREAU OF LAND MANAGEMENT.
10. SUBMIT TO THE ENGINEER A COPY OF THE RECORDED CORNER RECORD OR RESULTS OF SURVEY TO DOCUMENT COMPLIANCE WITH THE ARIZONA BOARD OF TECHNICAL REGISTRATION REQUIREMENTS.
11. FOR UNPAVED STREETS AND ALLEYS SET TOP OF MARKER SIX INCHES BELOW FINISHED GRADE

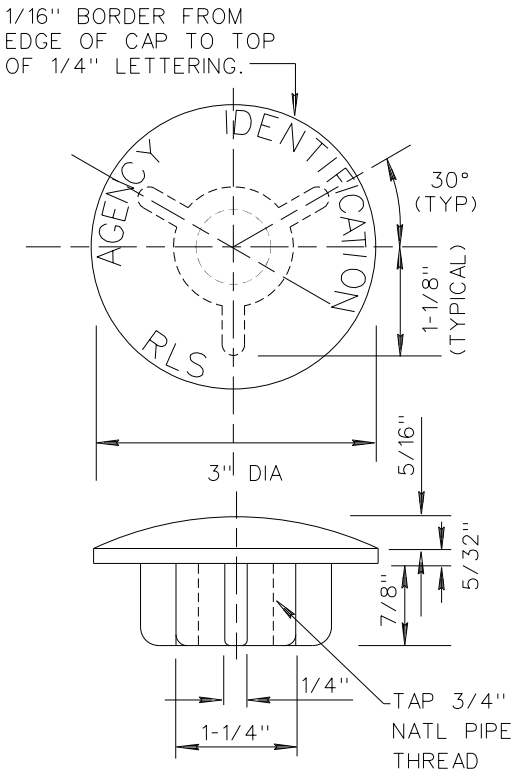


## CAP DETAIL

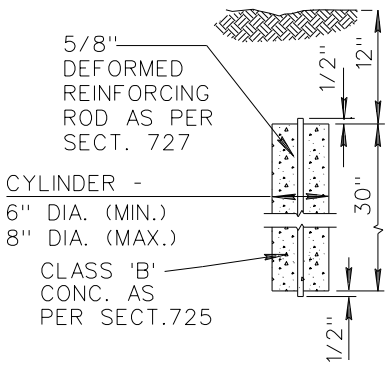


## TYPE 'C'

| DETAIL NO. | | | | REVISED | DETAIL NO. |
|---|---|---|---|---|---|
| 120 | MARICOPA ASSOCIATION of GOVERNMENTS | STANDARD DETAIL ENGLISH | SURVEY MARKER | 01-01-2014 | 120 |

SECTION 324 – REVISED 3-20-14

**PORTLAND CEMENT CONCRETE PAVEMENT (PCCP)**

**324.1 DESCRIPTION:**

This item shall consist of construction of a pavement composed of plain jointed portland cement concrete on a prepared subgrade. The Contractor shall furnish all labor, materials and equipment necessary for the construction of the pavement in accordance with these specifications and in reasonably close conformity to the lines, grades, thicknesses and details indicated by the plans or as established by the Engineer. All tests shall be performed by a laboratory approved by the Engineer.

**324.2 MATERIALS:**

**324.2.1 Portland Cement Concrete:** Portland cement concrete shall conform to the applicable requirements of MAG Standard Specifications Section 725 and the additional requirements of this section.

Class of Concrete shall comply with Table 725-1 for MAG AA, 4000 psi concrete unless otherwise specified by the Engineer.~~develop a modulus of rupture of not less than 520 psi within 14 days after placement, and not less than 650 psi at 28 days' age as determined by tests of specimens fabricated in accordance with ASTM C 31 and tested in accordance with ASTM C 78 procedures. The Contractor shall submit data acceptable to the Engineer at least 30 days in advance of the start of concrete paving operations which demonstrate that concrete produced with materials and proportions as proposed for use in the construction will conform to the modulus of rupture requirements of these specifications. The data shall include results of compressive strength tests conducted at the same age as modulus of rupture tests to establish the correlation which can be expected between the flexural and compressive strength properties of the concrete. The Engineer may, at his option, use compressive strength tests of specimens fabricated in accordance with ASTM C 31 and tested in accordance with ASTM C 39 to verify conformance to the modulus of rupture requirements of these specifications.~~

The maximum concrete slump shall be as determined by the approved mix design in accordance with Section 725.9,A1.

**324.2.2 Concrete Materials:** ~~Portland cement conforming to the requirements of ASTM C 150 for Type III, low-alkali, may be used at the Contractor's option. Aggregates shall be crushed rock or gravel conforming to the requirements of ASTM C 33. Coarse aggregate gradation shall conform to requirements for Size No. 57.~~ Fine aggregates shall have an average ~~s~~Sand ~~e~~Equivalent of not less than 75 when tested in accordance with the requirements of AASHTO T-176 or ASTM D-2419.

**324.2.3 Reinforcement:** Tie bars shall be deformed billet steel reinforcing bars conforming to the requirements of ASTM A-615, Grade 40.

Dowel or load transfer bars shall conform to the requirements of AASHTO M254 with Type B coating except the the core material shall ~~be plain round bars~~ conform~~ing~~ to the requirements of ASTM A-615, Grade 40. ~~One-half the length of each dowel bar shall be painted with one coat of tar paint~~. Note: this is from ADOT Section 401-2

~~Metal sleeves of an approved design shall be provided for use with dowel bars. Sleeves shall cover 2 inches, plus or minus 1/4 inch, of the dowel, shall have a closed end with a suitable stop to hold the end at least 1 inch from the end of the bar, and shall be designed to prevent collapse during construction.~~ An approved ~~basket~~ support system shall be used to hold bars parallel to pavement surface.

**324.2.4 Curing Materials:** Materials for curing concrete shall conform to the requirements of Section 726.

**324.2.5 Joint Materials:** Joint sealant shall be ~~a one-component, hot~~ poured type, conforming to the requirements of ~~ASTM D 3406~~ Section 729.2 or as approved by the Engineer.

DRAFT

Back-up rod or tape and bond breakers provided to control the depth of sealant, achieve the desired shape factor, support sealant against indentation and sag, or to prevent bond of the sealant to the bottom concrete surface shall be compatible with the joint sealant material.

~~Other pour-type joint sealants conforming to the requirements of Subsection 729.2 may be used if approved by the Engineer.~~

Preformed expansion joint filler shall conform to the requirements ~~of ASTM D 1751~~ Section 729.1 or as approved by the Engineer.

**324.3 CONSTRUCTION METHODS:**

**324.3.1 General:** Pavement shall be constructed with mechanical equipment utilizing stationary side forms or by the use of slipform paving equipment without stationary side forms. Manual methods of placing and finishing concrete with stationary side forms may be permitted by the Engineer for areas inaccessible for mechanical equipment.

Curbs, or combined curb and gutter, shall be constructed along the edges of all pavement where shown in the plans and shall be formed to the cross -section in accordance with the plans. Curbs may be constructed integrally with the pavement using a slipform or extrusion equipment or placed immediately after finishing operations by hand forming or using face forms. They may also be constructed as a separate operation after pavement construction using forms, slipform, or extrusion equipment. The edge of each gutter of the curb and gutter section built first may be used as a form in lieu of the setting of stationary side forms. Curbs, or curb and gutter, constructed as a separate operation shall otherwise conform to the requirements of Section 340. All curbs and gutters shall have the same thickness as the main roadway section. All joints shall be aligned with roadway joints.

**324.3.2 Equipment:** Design, capacity, and mechanical condition of equipment and tools necessary for handling materials and performing all parts of the work shall be approved by the Engineer. Equipment shall be at the jobsite sufficiently ahead of the start of concrete paving operations to permit thorough examination and approval by the Engineer prior to start of concrete paving.

Equipment used to place concrete may consist of one or more machines, shall be capable of uniformly distributing and consolidating the concrete as it is placed without segregation and shall be capable of producing concrete pavement which will conform to the required cross-section with a minimum of hand work. The number and capacity of machines furnished shall be adequate to perform the work required at a rate equal to the concrete delivery rate.

Vibrators shall be used to consolidate concrete; the rate of vibration shall be not less than 3,500 cycles per minute for surface vibrators and not less than 8,000 cycles per minute for internal vibrators. Power to vibrators mounted on mechanical equipment shall be so connected that vibration ceases when forward or backward motion of the machine is stopped. Contractor shall furnish a tachometer or other suitable device for measuring and indicating the frequency of vibration.

Slipform pavers shall be equipped with high frequency internal vibrators mounted with axes either parallel or normal to pavement alignment for the full paving width. Vibrators mounted with axes parallel with pavement alignment shall be spaced at intervals not to exceed 24 inches, measured center-to-center. Vibrators mounted with axes normal to pavement alignment shall be spaced so that lateral clearance between individual vibrating units does not exceed 6 inches.

Slipform paving equipment which will be wholly or partially supported on subgrade shall be equipped with traveling side forms of sufficient dimensions, shape and strength to support the concrete at free edges laterally for a sufficient length of time during placement to produce pavement of the required cross-section, and shall be equipped and operate with automatic sensing and control devices such that the machine automatically senses deviations from the established guideline and performs the necessary corrective maneuvers to overcome variations from correct grade and alignment.

DRAFT

When concrete will be placed adjacent to existing pavement or curb and gutter, that part of the equipment supported on the existing pavement or curb and gutter shall be equipped with protective pads on crawler tracks or rubber-tired wheels with bearing surfaces offset a sufficient distance from the edge of the pavement or curb and gutter to avoid edge damage, or the surface of the existing pavement or curb and gutter shall be otherwise protected against such damage in a manner approved by the Engineer.

**324.3.3 Subgrade and Base Preparation:** Subgrade and base shall conform to the applicable compaction requirements of section 601 and elevation tolerances specified for the material involved, shall be kept smooth and compacted, and shall be free of all loose and extraneous material when concrete is placed.

The surface of the subgrade shall be uniformly moist when concrete is placed. The surface of the subgrade shall be moistened immediately prior to placement of concrete if necessary to produce a uniformly moist condition. Any excess water standing in pools or flowing on the surface shall be removed prior to placing concrete.

~~Construction equipment shall not operate on the subgrade in the paving lane when conditions of the job will permit operation from outside the lane. When job conditions make it necessary to operate equipment on the subgrade in the paving lane, suitable runways or other precautions shall be taken to prevent rutting or displacement of subgrade material. The grade shall be checked and corrected immediately ahead of concrete placement and all disturbed grade shall be properly recompacted.~~ (moved to 3.5)

~~When concrete pavement will be placed with slipform paving equipment which will be supported and operate on the subgrade, the subgrade and slipform paver track area shall be brought to proper grade and cross section by means of a properly designed and operated machine.~~ (moved to 3/6(a))

**324.3.4 Stationary Side Forms and Setting of Forms:** Side form sections shall be straight, free from warps, bends, indentations or other defects. Side forms shall be of metal, have a base width of at least four inches and a minimum depth equal to the thickness of the pavement. No section shall show a variation from a true plane greater than 1/8 inch in ten feet on the top of the form or more than 1/4 inch in ten feet on the inside face. Flexible or curved forms of proper radius shall be used for curves of 100 feet radius or less. Suitable materials other than metal may be used to form end closures or at other locations where use of metal forms is not practical when approved by the Engineer. Forms shall be thoroughly cleaned and oiled each time they are used.

Forms shall be of such cross-section and strength and so secured and supported on the subgrade as to resist the pressure of the concrete when placed and the impact and vibration of any equipment they are to support without springing or settlement. The method of connection between sections shall be such that the joints shall not move in any direction.

Subgrade under forms shall be compacted and cut to grade so that the form when set will be uniformly supported for its entire length at the specified elevation. Forms shall be so supported and secured during the entire operation of placing and finishing that they will not deviate vertically at any point more than 1/8 inch from the proper elevation. Forms shall be set to the required lines and grades well in advance and for a distance sufficient to prevent delay in placing concrete, and shall be approved by the Engineer prior to placing concrete. When any form has been disturbed or any grade has become unstable, the form shall be reset and rechecked.

Side forms shall remain in place until the day after placing concrete, and in all cases until the edge of the pavement no longer requires the protection of the forms. Forms shall be carefully removed in such a manner as to avoid damage to the pavement. Use of pry bars between the pavement and the forms will not be permitted.

**324.3.5 Placing, Spreading and Compacting:** Construction equipment shall not operate on the subgrade in the paving lane when conditions of the job will permit operation from outside the lane. When job conditions make it necessary to operate equipment on the subgrade in the paving lane, suitable runways or other precautions shall be taken to prevent rutting or displacement of subgrade material. The grade shall be checked and corrected immediately ahead of concrete placement and all disturbed grade shall be properly recompacted. Except when otherwise approved by the Engineer, concrete shall be deposited on the subgrade and spread full width using mechanical methods that result in minimal ~~a minimum of~~ handling and segregation. Necessary hand spreading shall be done

DRAFT

with shovels, not rakes. Placement shall be continuous between transverse joints without the use of intermediate bulkheads.

The Contractor shall make adequate advance arrangements for preventing delay in delivery and placing of concrete. An interval of more than 15 minutes between placing of any two consecutive batches shall constitute cause for stopping operations, and Contractor shall install a construction joint in the concrete already placed at the location and of the type directed by the Engineer.

Concrete shall be deposited as near to expansion and construction joints as possible without disturbing them but shall not be dumped onto a joint assembly. Concrete shall be thoroughly consolidated against and along the faces of all forms, adjacent pavement or curb and gutter, and on both sides of all joint assemblies. Vibrators shall not be permitted to come in contact with joint assemblies, the grade, or side forms, and shall not be operated longer than 15 seconds in any one location.

Manual methods of placing, spreading, and compacting may be used in the construction of pavement lanes of irregular width or widths less than 10 feet, and sections of intersections or other locations with complex variable surface configurations when permitted by the Engineer. Workmen shall not be allowed to walk in the freshly placed concrete with boots or shoes coated with earth or other foreign substances.

**324.3.6 Shaping and Initial Finishing:** Concrete shall be struck off, consolidated, and float-finished with a slipform paver, mechanical finishing machine, vibrating screed, or by hand finishing methods when approved by the Engineer so that the complete pavement will conform to the thickness and cross -section requirements of the plans and specifications. When the pavement being constructed is contiguous to existing parallel concrete pavement or curb and gutter, the elevation of the new pavement surface shall conform as closely as possible to the elevation of the existing pavement or gutter surface and in a manner which will prevent ponding.

Water shall not be applied to the pavement surface during screeding and finishing operations in excess of the amount lost by evaporation. Adding water to the surface of the concrete to assist in finishing operations shall not be permitted. When applications of water to the surface are required to prevent rapid evaporation of water from the surface during finishing operations, it shall be applied as a fog spray and with approved spray equipment.

**324.3.6 (a) Slipform Supported on Subgrade Method:** When concrete pavement will be placed with slipform paving equipment which will be supported and operate on the subgrade, the subgrade and slipform paver track area shall be brought to proper grade and cross section by means of a properly designed and operated machine. The equipment shall spread, consolidate, screed and float-finish the concrete in one complete pass of the machine. The machine shall be operated with as nearly a continuous forward movement as possible and all paving operations shall be so coordinated as to provide uniform progress with stopping and starting of the paver held to a minimum. Sliding side forms shall be rigidly held together to prevent spreading. Any edge slump of the pavement, exclusive of edge rounding, in excess of 1/4 inch shall be corrected.

No abrupt changes in longitudinal alignment of the pavement will be permitted. The horizontal deviation shall not exceed 1 inch from the alignment established by the Engineer.

While concrete is being spread, compacted and shaped, vibrating units shall be operated within fresh concrete so that the longitudinal axis, at the center of each unit, is not more than 6 inches above the top of the subgrade. Amplitude of vibration shall be sufficient to be perceptible on the surface of concrete along the entire length of vibrating units and for a distance of at least one foot ~~there from~~.

**324.3.6 (b) Mechanical Equipment Supported on Fixed Form Method:** When concrete is spread without the use of internal vibration, the finishing machine shall be equipped with vibrating equipment that will internally vibrate the concrete for the full paving width and with not less than two oscillating or reciprocating screeds. Concrete shall be struck off and consolidated so that the surface will conform to the finished grade and cross -section shown on the project plans and with sufficient material on the surface for floating operations.

DRAFT

After the concrete has been struck off and consolidated, it shall be floated with a longitudinal float of a type approved by the Engineer.

A slipform paver or a single machine which will effectively spread, consolidate, screed, and float in one operation may be used in lieu of separate finishing and floating equipment.

**324.3.6 (C) Manual Methods with Fixed Forms:** Concrete shall be deposited, spread and struck off to such an elevation that, when properly consolidated, the surface will conform to the required lines and grades. Concrete shall be consolidated by internal vibration as it is struck off with a screed. A slight excess of concrete shall be kept in front of the screed at all times during the strike-off operation.

After consolidation and screeding, concrete shall be tamped to the proper surface elevation and cross -section using either a heavy plank with a length in excess of the width of pavement being placed by one foot or more, or with a mechanical vibrating unit spanning the full width between forms. The tamping plank, if used, shall be stiffened as necessary to prevent sag and shall have the lower tamping edge shod with metal. The tamping plank shall be moved forward with a combined vertical tamping and longitudinal screeding motion so that the concrete will be thoroughly consolidated and the surface screeded to the required elevation. A small surplus of concrete shall be kept in front of the tamper or vibrating unit. Tamping or vibrating shall continue until the specified cross- section is obtained and the mortar flushed slightly to the surface. On grades in excess of 5 percent a second strike board shall follow from 25 to 50 feet behind the tamper or vibrating unit and shall be used in the same manner to remove waves caused by the flow of concrete behind the first strike board.

~~Other m~~Methods other than the tamping plank may be utilized for screeding when approved by the Engineer.

Pavement shall be finished smooth and true to grade with suitable manually operated floats or powered finishing equipment.

**324.3.7 Final Finishing:** After the pavement has been float-finished, it shall be scraped with a 10-foot long straightedge equipped with a handle to permit operations from the edge of the pavement, and excess water and laitance shall be removed from the surface. The straightedge shall be operated parallel to the centerline of the pavement and shall be moved forward one-half length after each pass. Irregularities shall be corrected by adding or removing concrete, and disturbed places shall be again straight-edged.

Long-handled ~~wood~~ floats shall be used only in areas not accessible to finishing equipment and in emergencies, and use of such floats shall be confined to a minimum.

The addition of water to the surface of the concrete to assist in finishing operations shall not be permitted unless approved by the Engineer. When the evaporation rate on the concrete surface exceeds the rate of bleeding of the concrete, measures shall be taken ~~When addition of water to the surface is permitted~~ to prevent the rapid evaporation of water from the surface during finishing operations,~~.~~ When allowed by the Engineer, the addition of water to the surface may be permitted when applied as a fog spray with approved spray equipment immediately after screeding and/or between finishing operations. A commercial evaporation reducer that forms a monomolecular film may also be sprayed onto the concrete surface in accordance with the Manufacturer's recommendations. When either of these methods is approved and used it does not take the place of proper curing methods per Section 3.8.

Pavement edges and joints shall be edged in accordance with details shown on the project plans or as directed by the Engineer.

In advance of curing operations, pavement shall be given a texturing. Texturing shall be performed with an artificial turf drag with a board added to assure the weight needed to obtain an approved surface. Artificial turf shall be a molded composite structure with polyethylene face, nylon and polyester backing, a pile height of 0.85 inches, and total weight of 75 oz./sq. yd. The approved surface will be made by the Engineer on the initial construction and shall not be changed without approval. Each time the construction is stopped or causes the texturing to stop, the artificial turf must be shaken clean before continuing.

DRAFT

**324.3.8 Curing:** Curing shall begin immediately following surface texturing and edging. Before concrete placement begins Contractor shall have at hand and ready to install ~~before concrete placement begins~~ the materials and equipment needed for adequate curing.

After finishing operations have been completed, the newly placed concrete shall be cured by moist curing methods, by application of a white liquid membrane compound, or by a combination of these methods. All surfaces not covered by reasonably waterproof forms shall be kept damp by applying water with a nozzle that so atomizes the flow of water that a fog mist and not a spray is formed until the surface is covered with liquid membrane compound, the surface has hardened sufficiently to permit sprinkling of the surface, or moist curing by covering with wet burlap or other approved materials can be initiated. Moisture from the nozzle shall not be applied under pressure directly upon the concrete and shall not be allowed to accumulate on the concrete in a quantity sufficient to cause a flow and erode the surface. Moist curing shall be continued until liquid membrane curing compound or other type of curing membrane is applied.

Membrane curing compound shall be applied to all pavement by automatic mechanical method from a construction bridge.

The edges of concrete slabs exposed by the removal of forms shall be protected immediately to provide these exposed surfaces with continuous curing treatment equal to the method selected for curing the pavement surface.

The membrane method of curing may be applied behind the final finishing operation after all free water has disappeared from the surface. Complete and uniform coverage at the rate of one gallon per 100 square feet, or as otherwise recommended by the manufacturer, shall be required. Compound shall be kept agitated to prevent pigment from settling.

**324.3.9 Joints:**

**324.3.9.1 General:** Joints shall be provided in the pavement of the type, dimensions and at the locations as indicated in the plans or as specified herein.

Joints in concrete pavement will be designated as transverse expansion joints, longitudinal or transverse construction joints, longitudinal or transverse weakened plane joints, or isolation joints. The faces of all joints shall be perpendicular to the pavement surface. Joints shall be constructed in accordance with the details shown in the plans and in accordance with the following provisions.

At all times prior to acceptance of the construction, joints shall be maintained clean and free of all soil, gravel, and other foreign material except approved types of joint filler materials.

**324.3.9.2 Longitudinal Joints:** Longitudinal joints shall be weakened plane or construction joints. Longitudinal weakened plane joints shall be constructed by sawing or by insertion of a parting strip in the plastic concrete to be left in place. Longitudinal construction joints shall be constructed with tie bars or keyways as indicated in the plans.

**324.3.9.3 Transverse Joints:** Transverse joints shall be weakened plane, construction or expansion joints. All transverse weakened plane joints will be constructed by sawing and in accordance with the details shown in the project plans. Transverse construction joints shall be constructed with dowels or with sawed keyways and in accordance with the details shown in the project plans. Transverse expansion joints shall be constructed as butt joints with vertical expansion joint filler and with or without dowel bars in accordance with the details shown in the project plans. Dowel bars shall be supported on a basket-type system with a base plate on subgrade and up the side form to prevent material from entering dowel openings.

**324.3.9.4 Joint Location:** Longitudinal joints shall be constructed between traffic lanes and at other locations as indicated in the project plans.

Transverse construction joints shall be constructed at the end of a day's production or when placing of concrete is discontinued for more than 45 minutes. Transverse construction joints will not be allowed within 500 feet of a structure unless otherwise approved by the Engineer.

DRAFT

Transverse weakened plane joints in concrete placed in lanes adjacent to previously placed concrete shall be located to align with weakened plane joints in the adjacent lanes. No transverse weakened plane joint shall be constructed within 6 feet of another transverse joint. When the planned spacing of transverse weakened plane joints results in location of a weakened plane joint within 6 feet of another transverse joint, the transverse weakened plane joint shall be relocated so it is not within 6 feet of said transverse joint.

Transverse expansion joints shall be located at the junction of the normal roadway pavement slab with bridge approach slabs and at other locations as shown on the plans.

Isolation joints shall be provided around manholes, catch basins, or other elements which extend into or project through the pavement and act as point of restraint to horizontal or vertical movement of the pavement.

**324.3.9.5 Construction of Joints:**

**324.3.9.5.1 Sawed Joints:** Sawed joints shall be constructed by cutting a groove in the pavement using a single or multiple-blade power saw. The groove shall be cut to the dimensions shown on the project plans. Suitable guidelines or devices shall be used to ~~assure~~ensure joints are cut true to the lines as shown on the project plans.

If joints are sawed in stages, the initial saw cut shall be of the minimum width specified and sawed to the required depth shown on the project plans. The depth of the initial saw cut in the construction of weakened plane joints shall be a minimum of 1/4 of slab thickness.

Sawing of weakened plane joints shall be done before uncontrolled cracking takes place, and after the concrete has hardened to the extent that tearing or raveling of the edges of the saw cut is not excessive. The exact time for all sawing shall be determined by the Contractor when not otherwise specified herein.

Any procedure for sawing joints that result~~s~~ in premature, uncontrolled cracking shall be revised immediately. The Contractor shall be responsible for replacing or repairing areas containing uncontrolled cracking and for repairing spalled or chipped concrete along the edges of sawed joints as directed and to the satisfaction of the Engineer.

After saw cutting of the joint and just prior to sealing the joint, the internal joint surfaces shall be cleaned of all dirt, curing and compound residue, laitance and other foreign materials. The internal joint surface shall be defined as the sawed portion of the joint and the resultant crack for the full depth of the pavement.

**324.3.9.5.2 Construction Joints:** Longitudinal and transverse construction joints shall be of the type and formed in accordance with the details shown on Detail 224 or as directed by the Engineer.

**324.3.9.5.3 Expansion and Isolation Joints:** Transverse expansion and isolation joints shall be formed in accordance with the details shown on Detail 224 or as directed by the Engineer.

**324.3.9.5.4 Sealing of Joints:** Sealing of sawed joints where required shall be completed prior to the opening of the pavement to traffic unless otherwise approved by the Engineer. When delayed sealing of sawed joints is permitted, saw cuts and formed recess to be filled with sealant shall be protected to ensure thorough curing of the concrete along the edges of the joint recesses and to prevent entry of foreign materials into the joint. At the Contractor's option, inert compressible joint filler material such as plastic backer rod or upholstery cord may be inserted into joints immediately after sawing or forming of the joint recess to provide curing protection and prevent entry of foreign material. If absorptive filler material is used, it shall be thoroughly moistened either before or immediately after installation in the sawed groove. When filler material is rope, or similar material which does not fill the entire depth of sawed groove, it shall be depressed not less than ½ inch below the pavement surface before the pavement is opened to traffic.

Sealant shall be applied in accordance with the sealant manufacturer's recommendations. A primer shall be furnished and applied after the joint has been cleaned and prepared to receive sealant if so indicated in the manufacturer's recommendations.

Prior to the application of the sealant, an approved type of inert, compressible joint filler material such as plastic backer rod or upholstery cord, or an approved type of bond breaker, shall be inserted along the joint in accordance

DRAFT

with the details shown on the project plans. The joint shall then be filled with sealant to a level not less than 1/8 inch or more than 1/4 inch below the elevation of the pavement surface adjacent to the joint edge.

The equipment used to apply sealant shall be as recommended by the sealant manufacturer. Sealant shall not be spilled on the surface of the concrete pavement, and Contractor shall remove any sealant inadvertently spilled on the pavement surface.

**324.3.9.5.5 Repair of Cracks, Spalls, Raveling and Tearing:** Contractor shall be responsible for replacing or repairing all areas of pavement containing uncontrolled cracking, surface spalls, or other types of surface defects as directed by the Engineer. Repairs shall be made by methods acceptable to the Engineer and the repair shall be completed to the satisfaction of the Engineer.

**324.4 Tests of Finished Pavement:**

**324.4.1 Smoothness:** The pavement Surface Profile Index shall not exceed seven inches per mile in any 0.1 of a mile section or any remaining portion thereof as measured along any line parallel to the edge of the pavement except at and through intersections, and at and through railroad crossings. The surface profiles will be evaluated in accordance with the requirements of Arizona Department of Transportation Test Method 801.

After completion of all paving, the Contractor shall clean the pavement by brooming or any other method to allow the Engineer to obtain accurate profilograph readings. Profilograph readings will be taken one time in each wheel path of each lane.

Grinding will be required if necessary to produce a surface smoothness conforming to the requirements of this section. In addition, all high areas having deviations in excess of 0.3 of an inch shall be ground. After grinding, the finished surface of the ground area shall be provided with a uniform texture acceptable to the Engineer. The method of texturing shall be approved by the Engineer.

In addition to the Surface Profile Index requirement, the pavement surface including pavement in intersections will be tested with a ten-foot straight-edge placed parallel to the centerline of the pavement in each lane. Ordinates measured from the face of the straight-edge to pavement surface shall at no place exceed one-quarter inch. Areas that do not meet the required surface accuracy as determined by straight-edge testing shall be marked, and Contractor shall at his own expense and as required by the Engineer either:

(1) Grind down areas higher than 1/4 inch but not more than 1/2~~½~~ inch above the correct surface.

(2) Correct areas lower than 1/4 inch but not lower than 1/2~~½~~ inch below the correct surface by grinding down the adjacent areas.

(3) Break out and replace pavement when the deviation exceeds 1/2~~½~~ inch from the correct surface. Area replaced shall be of a length, width and depth as required to allow formation of a new slab of the required quality.

**324.4.2 Pavement Thickness:** Concrete pavement shall be constructed in accordance with the thickness requirements of the plans and specifications. Tolerances for base and subgrade construction and other provisions of these specifications which may affect thickness shall not be construed to modify such thickness requirements.

For the purpose of determining acceptability for thickness, cores shall be drilled by the Contractor at the locations specified by the Engineer. Cores shall have a minimum diameter of four inches. Length of cores will be determined in accordance with the requirements of AASHTO T-148 by measurements read to the nearest thousandth of an inch. The average of the measurements will be reported to the nearest hundredth of an inch.

In calculating average length, cores which have a length in excess of the thickness specified by more than 0.25 of an inch will be deemed to have a length of the specified thickness plus 0.25 of an inch. Field length measurements will be acceptable in lieu of average length measurement in accordance with the requirements of AASHTO T-148, provided the original core in any secondary unit meets or exceeds the specified thickness. Measurements in

DRAFT

accordance with the requirements of AASHTO T-148 will be required on any questionable thickness measurements and on the three cores used to determine the average length for payment, regardless of length.

A primary unit of pavement shall be the area of pavement placed in each day's paving operation. Each intersection or special section shall be considered as a primary unit.

A secondary unit of pavement shall consist of 1,000 linear feet, or fraction thereof, of each traffic lane. Each 1,300 square yards of pavement in intersections, etc., shall be considered a secondary unit regardless of when the concrete was placed.

One core shall be drilled in each secondary unit. If the length of that core is not deficient by more than 0.25 of an inch, that secondary unit will be measured for payment at 100 percent. If the length of that core is deficient by more than 0.25 of an inch but less than 1.0 inch, two additional cores shall be drilled within that secondary unit and the length of the three cores averaged. If the average length is not deficient by more than 0.25 of an inch, that secondary unit will be measured for payment at 100 percent. If the average length of the three cores is deficient by more than 0.25 of an inch, that secondary unit will be measured for payment in accordance with the requirements of Table 324-1.

If the core in the secondary unit is deficient by more than 1.00 inch, that core will not be used in determining the average thickness of that secondary unit. Additional cores shall be drilled at intervals not to exceed ten feet in each direction from the deficient core, parallel to the main-line centerline, until one core is obtained in each direction which is not deficient by more than 1.00 inch. The pavement between these two cores will be evaluated separately from the balance of the pavement in that secondary unit. The limits for evaluation shall be between the longitudinal weakened plane or construction joint on each side of the core and between the next transverse weakened plane, construction, or expansion joint beyond each of the last two cores. Unless the Engineer allows the pavement to remain, it shall be removed and replaced with pavement of the specified thickness and no payment will be made for the removed~~al~~ pavement. One additional core shall be drilled in the secondary unit to represent the quality of the concrete in that unit after deducting the limits of the deficient area if that pavement represented by the deficient area is allowed to remain. The core shall be measured for payment as hereinbefore specified.

If the pavement in the deficient area is removed, either by the order of the Engineer or at the option of the Contractor, it shall be removed between the limits of the evaluation. After the pavement has been replaced, one core shall be drilled at random in that secondary unit after deducting the area of the replaced pavement and one core shall be drilled in the new pavement. Pavement represented by the core drilled in the secondary unit, less the replaced pavement, will be measured for payment as hereinbefore specified. The core drilled in the replaced pavement shall be not less than the specified thickness~~,~~; otherwise that pavement will not be measured or paid for.

At all locations where cores have been drilled, the resulting holes shall be filled with concrete in a manner satisfactory to the Engineer.

**324.5 PROTECTION OF PAVEMENT:**

The Contractor shall be responsible for taking adequate steps to protect concrete placed during rain, or hot or cold weather as defined in ACI Standards. Any concrete damaged by rain or extreme temperatures shall be removed and replaced at the Contractor's expense.

When ordered by the Engineer, pavement crossings shall be constructed for the convenience of public traffic. Where motor vehicles are encountered, a temporary bridge to span the newly placed concrete will be provided.

No traffic or Contractor's equipment, except as hereinafter provided, will be permitted on the pavement until the concrete has developed a compressive strength of 3500 psi.

Equipment for sawing joints will be permitted on the pavement when, in the Contractor's judgment, the concrete has developed sufficient strength to support the equipment without damage to the concrete. In case of visible cracking or other damage to the pavement, operation of the equipment on the pavement shall be immediately discontinued.

DRAFT

Any damage to the pavement resulting from early use of pavement by the Contractor's equipment shall be repaired by the Contractor at his expense.

**324.6 METHOD OF MEASUREMENT:**

Portland ~~c~~Cement ~~c~~Concrete ~~p~~Pavement will be measured by the square yard. Any opening in excess of one square yard will not be measured for payment.

**324.7 BASIS OF PAYMENT:**

The accepted quantities of ~~p~~Portland ~~c~~Cement ~~c~~Concrete ~~p~~Pavement, measured as provided for herein, will be paid for at the contract unit price complete in place, except that where the average length of cores indicates pavement deficient in thickness by more than 0.25 of an inch but not more than 1.00 inch, payment will be made as specified in Table 324-1. Payment will be made to the nearest cent.

No additional payment will be allowed for pavement constructed in excess of the thickness specified on the project plans.

| **TABLE 324-1** | |
|---|---|
| **PAVEMENT THICKNESS PAYMENT REDUCTION (~~AC~~PCCP)** | |
| Core Thickness, Less Than Specified Thickness, Inches | Percent of Contract Unit Price Allowed |
| 0.00 to 0.25 | 100 |
| 0.26 to 0.35 | 93 |
| 0.36 to 0.45 | 85 |
| 0.46 to 0.55 | 75 |
| 0.56 to 0.75 | 63 |
| 0.76 to 1.00 | 50 |

DRAFT

**MARICOPA COUNTY**
***Department of Transportation***

**MEMORANDUM**

**Date:** March 20, 2014

**To:** MAG Specifications and Details Committee

**From:** Robert Herz, MCDOT Representative

**Subject:** Revision to Section 735 REINFORCED CONCRETE PIPE and Section 618 STORM DRAIN CONSTRUCTION to add Elliptical and Arch RCP **Case 14-07**

**PURPOSE:** Modify section 735 specification to include reinforced concrete arch pipe and reinforced concrete elliptical pipe for use with storm and irrigation water. Also modifies section 618 to coordinate with modified section 735.

**REVISION:** See the attached redlined strike-out version of the specification for revisions.

2901 West Durango Street Phoenix, Arizona 85009 Phone: 602-506-4760 Fax: 602-506-5969

## REINFORCED CONCRETE PIPE

### 735.1 GENERAL:

These specifications cover reinforced concrete pipe and related structures intended to be used for conveyance of sewage, industrial waste, and storm and irrigation water.

Except as modified herein reinforced concrete pipe shall be manufactured and tested in conformance with the requirements of ASTM C76 for circular pipe, ASTM C506 for arch pipe, and ASTM C507 for elliptical pipe~~, except as modified herein.~~

~~The size, type, and D-load of the concrete pipe to be furnished shall be as shown on the plans, or as specified under the item of work for the project of which the pipe is a part and shall be for pipe installed by the open-cut method of construction.~~

~~When specified in the special provisions, four sets of pipe line layout drawings shall be furnished to the Engineer prior to the manufacture of the concrete pipe. Catch basin connector pipe need not be included in the pipe line layout; however, pipe stubs shall be included. In lieu of including catch basin connector pipe in the pipe layout, a list of catch basin connector pipes shall accompany the layout. The connector pipe list shall contain the following information.~~

~~(A) Size and D-load of pipe.~~

~~(B) Station at which pipe joins main line.~~

~~(C) Number of section of pipe, length of section, type of sections (straight, horizontal bevel, vertical bevel, etc.).~~

~~The pipe layouts will be used by the Contracting Agency for reference only, but their use shall in no way relieve the Contractor of the responsibility for the correctness of the layout.~~

~~(D) All pipe installed in tunnels shall be ASTM C76, Class III. Pipe stronger than that specified may be furnished at the Contractor's option, and at no additional cost to the Contracting Agency, provided such pipe conforms in all other respects to the applicable provisions of these specifications.~~

Whatever struts or other protective methods proved necessary to furnish and install the pipe to meet the limitation of cracks as specified herein, shall be provided and maintained throughout pipe handling and transportation.

### 735.2 ~~QUALITY~~BELL JOINT REINFORCEMENT:

~~Reinforced concrete pipe shall be manufactured and tested in conformance with the requirements of ASTM C76, except as modified herein.~~

All reinforced concrete pipes less than 36 inch inside diameter and the same approximate equivalent size shall include an area of reinforcing steel in the bell not less than the area required for the circumferential reinforcement in the wall of the pipe.

### 735.3 CURVES, BENDS AND CLOSURES:

Horizontal and vertical long-radius curves shall be formed by bevel adapters or by beveling the straight pipe joint. The bevel of the pipe shall not exceed 5 degrees and the total angular deflection, for beveled pipe, shall not exceed 10 degrees. Small angular changes may be made with straight pipe provided that the joint opening does not exceed 3/4 inch. Short radius curves and closures shall be formed with fabricated specials; however, the angular deflection of any segment of the fabricated section shall not exceed 10 degrees.

### 735.4 MATERIALS:

Except when otherwise permitted by the Engineer, no materials other than water, Portland cement, Pozzolanic materials, mineral aggregates and steel shall be used in the manufacturing of the pipe~~, conforming to ASTM C76,~~ with the following exceptions:

**Comment [RTH1]:** This belongs in the installation specification (section 618) not in the pipe material specification. Therefor it has been moved to section 618.1 and deleted from this specification.

**Comment [RTH2]:** Moved to Section 618. Since coordination and submittal of the pipe line layout drawings is the responsibility of the construction contractor.

**Comment [RTH3]:** Section 618.3 paragraph 7 requires all RCP installed under Permit to be Class III or stronger therefore the first sentence is deleted. Also since this is an engineering design requirement and not a pipe material specification it should be deleted from this specification.

**Comment [RTH4]:** This belongs in the installation specification (section 618.1) not in the pipe material specification. Therefor it has been moved to section 618.1 and deleted from this specification.

(A) Portland Cement: Portland cement shall comply with ASTM C150, Type II, and low alkali. The pipe manufacturer shall supply a cement mill certificate in triplicate for each load of cement delivered, showing the specification, type, chemical analysis, and quantity. In lieu of the above, on stockpiled pipe the manufacturer shall certify that the type of cement used meets ~~-~~this specification. The pipe manufacturer shall also certify in writing that the cement content of the concrete complies with the specifications as to yield per cubic yard of concrete poured.

(B) Concrete Admixtures: The pipe manufacturer shall certify in writing that no calcium chloride or admixture containing calcium chloride has been used in the manufacture of the pipe. Other admixtures may be used if approved by the Engineer. The pipe manufacturer shall certify to the brand and chemical content of such admixtures used.

(C) Steel Reinforcement: The pipe manufacturer shall supply three copies of mill certificates showing heat numbers, chemical analysis, and physical tests on reinforcing steel. In lieu of the above, on stockpiled pipe the manufacturer shall certify that the type of steel used meets this specification~~. The number of steel wraps shall not be less than 5 percent below that shown on the shop drawing for any one pipe~~.

**Comment [RTH5]:** Shop drawings for pipe fabrication is not required therefor this should be deleted.

(D) Rubber gaskets shall be in accordance with ASTM C443.

**735.5 MANUFACTURER'S QUALIFICATIONS AND EQUIPMENT REQUIREMENTS:**

The manufacturer shall be competent to manufacture the type, size and quality of pipe; in addition, the manufacturer shall have satisfactory curing and storage facilities, and satisfactory financial resources.

Calibration of Cement and Aggregate Scales: The pipe manufacturer shall make whatever alterations are necessary to his equipment to enable the Contracting Agency's Sealer or State Inspector of Weights and Measures to check, calibrate, and seal the aggregate and cement scales used in the pipe production.

**735.6 CURING OF PIPE:**

(A) Steam Curing: The manufacturer shall provide adequate steam plant, piping, enclosures, and other facilities for curing the pipe. The enclosures shall be such that the temperature is maintained continuously between 110 and 150°F.

(B) Curing of the pipe shall not commence until the concrete has attained its initial set, but in any event not sooner than 1 hour and no later than 8 hours after placing of the concrete. Rate of rise of temperature shall not exceed 30°F per hour.

(C) Water Curing: The pipe shall be kept moist during daylight hours. The pipe, including the ends, shall be covered with burlap for the first 3 days, except that, if the pipe is kept constantly and completely wet with fog sprays during the daylight hours, the burlap covering may be omitted. If the manufacturer fails to proceed immediately with the required water curing, ~~he shall seal~~ the surfaces of the concrete~~,~~ except joint surfaces that are to be grouted~~,~~ shall be sealed with an approved~~,~~ white pigmented sealing compound in accordance with Section 726.

**735.7 TESTS AND ACCEPTANCE:**

(A) Basis of Acceptance: The basis of acceptance for the reinforced concrete pipe shall be in accordance with ASTM C76, ASTM C506, or ASTM C507, as applicable, including ~~by~~ the method stated in the special provision and as amended herein. However, the purchaser may, at his option, make concrete cylinder tests for the purpose of determining release dates for shipment of the pipe and for his information in regard to general quality of the concrete.

(B) Segregation of Material: The slump of the concrete mix shall not exceed 4 inches so as to preclude excessive segregation of the materials used and shall be proportioned so that the result shall be a homogeneous concrete mixture of such quality that the pipe will conform to the tests and design requirements of these specifications.

(C) A pipe has failed the D-load test when the opening crack exceeds .01 inch for a distance of 1 foot when measured at close intervals. These measurements are taken within the 1 foot measured span only when the crack line is more or less parallel to the axis of the pipe, as it is obvious that where the crack deviates substantially from parallel, and approaches a direction normal to the axis, that the edges of the crack tend to slip past each other, instead of opening up under load. The intent of the test is to measure the crack opening under stress.

(D) Porous or honeycomb concrete areas 6 inches or less in diameter may be removed and repaired. Pipe having defects or repairs greater than 6 inches in diameter will not be accepted.

(E) Any crack exceeding 1 foot in length that goes completely through the pipe, is not considered acceptable whether repaired or not, except that a single end crack that does not exceed the depth of the joint as measured from the end to the inside shoulder is acceptable.

(F) Any crack that is .01 inch in width for one-sixteenth inch in depth or deeper, for a length of 1 foot or more and continues as a hairline crack down to the reinforcing steel for over 1/2 the length of the pipe is not considered acceptable whether repaired or not.

(G) A single continuous hairline crack which does not extend to the reinforcing steel and not in excess of .01 inch in width for a distance of 1 foot is acceptable without repair. This type of crack, longer than 1 foot shall be repaired.

(H) Repairs shall be made by filling the defect with epoxy under pressure or by chipping out a V-Section to the full depth of the defect and repairing with an approved patching compound. The composition of the patching compound shall be furnished to the Engineer for approval.

(I) The words regarding acceptability and repair ability in the above paragraphs shall also apply when the crack occurs after loading of the pipe in the trench with backfill. Cracks wider than .01 inch shall be assumed to indicate overstress of the steel. In such case, the defective portion of the installation shall be replaced or repaired in a manner acceptable to the Engineer. After structural repairs are completed, the remaining cracks shall be filled as required above. All corrective measures shall be at the expense of the Contractor.

(J) Blisters: All pipe joints having blisters involving less than 1/4 the interior surface area shall be repaired by removing all loose material and exposing all hollow area and replacing with fresh concrete properly bonded, with an acceptable bonding agent, and curing the repair with membrane coating. Blisters with larger areas are not considered to be repairable or acceptable.

(K) Painting of pipe, or portion of pipe, with grout to cover defects, minor or major, will not be permitted until approved by the Engineer.

(L) Where the modified or special design method, under the ASTM Standard ~~C76~~ is elected, acceptance on the basis of material tests and inspection of manufactured pipe for defects and imperfections shall be as stated in the ASTM ~~C76~~ Standard, and as amended herein. However, one joint of each size and D-load shall be selected by the Engineer for test purposes, and shall be tested for strength by the 3 edge bearing method, ASTM C497, with the results being used for confirmation of the submitted design for this D-load. If the pipe section tested fails in compression or shear before reaching the D-load specified, the test shall be considered a failure. Additional sections of the same diameter size and class shall be tested as specified above until the load requirements are met for the D-load strength. This test procedure shall be accomplished only once per manufacture regardless of the number of contractors he supplies. Placing of reinforcing steel in the test section of pipe to control shear cracks will not be permitted.

Requirements regarding defects shall be the same as stated above for standard pipe.

Concrete test requirements specified under compression tests of the ASTM ~~C76~~ Standard shall be amended in part to read as follows: "The average of any 5 consecutive strength tests of the laboratory-cured specimens shall be equal to or greater than the specified strength set forth in the design strength requirements ~~T~~table~~s III, IV, or V~~ for the type and class of pipe being produced, and not more than 20 percent of the strength tests shall have values less than the specified strength. If more than 20 percent have values less than the specified strength, the lot represented shall be considered to be defective and not acceptable. In no case shall any cylinder tested fall below 80 percent of the specified design strength. If anyone cylinder falls below 80 percent of the specified design strength, then the entire production represented by that cylinder will not be accepted for purchase by the Contracting Agency unless the Contractor can demonstrate by coring to the satisfaction of the Engineer, that the cylinder in question is not representative of the entire production, or is representative of only a portion of the entire production."

During the fabrication of the pipe, concrete cylinders shall be made from a representative sample of the concrete. Concrete cylinders and slump tests shall be made by the Engineer or under his direct supervision. A set of cylinders shall consist of ~~three~~five. A minimum of one set shall be made for each day's production.

**Comment [RTH6]:** A minimum of five cylinders is required by each of the ASTM standards.

In vibrated and spun pipe, where the slump of the concrete approaches 0, the cylinders shall be made as follows:

Fill the cylinder can in 3 equal layers. Each layer shall be vibrated and assisted by rodding or other mechanical contrivance simultaneously until the moisture comes to the surface. Care shall be taken that the material is not over-vibrated which will cause segregation. When the moisture rises to the surface of the third layer, it is struck off and leveled. The cap is put on the cylinder and it is marked for identification. It shall then be steam cured in the same manner as the pipe, at the conclusion of which, the cylinders shall be brought into the laboratory for standard moist curing until the prescribed time for the compressive test.

The cylinders shall be made according to ASTM C31 where the pipe is manufactured with concrete that has enough slump for the material to be hand rodded. For reinforced concrete pipe made by the centrifugal method, the manufacturer may substitute centrifugally cast test cylinders for standard test cylinders. Centrifugally cast cylinders shall be made in accordance with AWWA C302 and cured in the same manner as normal test cylinders, except that the net area of the hollow cylinder will be used to determine the compressive strength.

~~**735.8 DOWNGRADING OF PIPE:**~~

~~For the purpose of these specifications, downgrade pipe shall be defined as pipe which is to be used under loads less than that for which they have been designed.~~

**Comment [RTH7]:** This section serves no purpose therefor I suggest that it be deleted.

**735.9 SANITARY SEWER PIPE:**

In addition to the above, sewer pipe shall meet the requirements of ASTM C76, reinforced concrete pipe having O-ring Rubber Gasket Joints with an interior lining of plastic liner plate in accordance with Section 741.

(A) Pipe Design: The wall thickness and the amount of circumferential reinforcement shall not be less than that required for the D-load indicated on the plans and required by the specifications. The calculations for wall thickness and amount of steel area per foot of pipe, having concrete lining, shall be for a pipe 2 inches larger in internal diameter than that specified on the plans. The additional concrete lining shall not be considered in the calculation for the area of steel required, nor in any of the load calculations.

D-load class of pipe and the date poured shall be plainly marked inside each pipe section. Specific approval must be obtained, prior to submitting a bid; to decrease the cover over the reinforcing steel at the joint should the steel interfere with the rubber gasket in the groove at the spigot end.

(B) Pipe Construction: Tamped or packer head pipe will not be allowed. Pipe having concrete lining shall have the internal diameters indicated on the plans, measured to the inside of the additional 1 inch of covering. The various sizes of pipe shall be centrifugally spun. Pipe having plastic liner plate shall be vibrocast to 1/2 inch tolerance to match the unlined pipe of the D-load indicated on the plans.

(C) Test and Acceptance: In addition to the statements above, any crack that goes completely through the pipe, regardless of length of crack is not considered acceptable whether repaired or not, except that a single end crack that does not exceed the depth of the joint as measured from the end to the inside shoulder is acceptable.

**735.10 ACCEPTANCE MARK:**

The Engineer may, at the place of manufacturer, indicate his acceptance of the pipe for delivery to the job by marking the pipe with the Contracting Agency's mark. Such acceptance, however, shall not be considered a final acceptance.

If the pipe is subsequently rejected, the mark placed thereon by the Engineer shall be defaced.

***- End of Section -***

# REINFORCED CONCRETE PIPE

## 735.1 GENERAL:

These specifications cover reinforced concrete pipe and related structures intended to be used for conveyance of sewage, industrial waste, and storm and irrigation water.

Except as modified herein reinforced concrete pipe shall be manufactured and tested in conformance with the requirements of ASTM C76 for circular pipe, ASTM C506 for arch pipe, and ASTM C507 for elliptical pipe.

Whatever struts or other protective methods proved necessary to furnish and install the pipe to meet the limitation of cracks as specified herein, shall be provided and maintained throughout pipe handling and transportation.

## 735.2 BELL JOINT REINFORCEMENT:

All reinforced concrete pipes less than 36 inch inside diameter and the same approximate equivalent size shall include an area of reinforcing steel in the bell not less than the area required for the circumferential reinforcement in the wall of the pipe.

## 735.3 CURVES, BENDS AND CLOSURES:

Horizontal and vertical long-radius curves shall be formed by bevel adapters or by beveling the straight pipe joint. The bevel of the pipe shall not exceed 5 degrees and the total angular deflection, for beveled pipe, shall not exceed 10 degrees. Small angular changes may be made with straight pipe provided that the joint opening does not exceed 3/4 inch. Short radius curves and closures shall be formed with fabricated specials; however, the angular deflection of any segment of the fabricated section shall not exceed 10 degrees.

## 735.4 MATERIALS:

Except when otherwise permitted by the Engineer, no materials other than water, Portland cement, Pozzolanic materials, mineral aggregates and steel shall be used in the manufacturing of the pipe with the following exceptions:

(A) Portland Cement: Portland cement shall comply with ASTM C150, Type II, and low alkali. The pipe manufacturer shall supply a cement mill certificate in triplicate for each load of cement delivered, showing the specification, type, chemical analysis, and quantity. In lieu of the above, on stockpiled pipe the manufacturer shall certify that the type of cement used meets this specification. The pipe manufacturer shall also certify in writing that the cement content of the concrete complies with the specifications as to yield per cubic yard of concrete poured.

(B) Concrete Admixtures: The pipe manufacturer shall certify in writing that no calcium chloride or admixture containing calcium chloride has been used in the manufacture of the pipe. Other admixtures may be used if approved by the Engineer. The pipe manufacturer shall certify to the brand and chemical content of such admixtures used.

(C) Steel Reinforcement: The pipe manufacturer shall supply three copies of mill certificates showing heat numbers, chemical analysis, and physical tests on reinforcing steel. In lieu of the above, on stockpiled pipe the manufacturer shall certify that the type of steel used meets this specification.

(D) Rubber gaskets shall be in accordance with ASTM C443.

## 735.5 MANUFACTURER'S QUALIFICATIONS AND EQUIPMENT REQUIREMENTS:

The manufacturer shall be competent to manufacture the type, size and quality of pipe; in addition, the manufacturer shall have satisfactory curing and storage facilities, and satisfactory financial resources.

Calibration of Cement and Aggregate Scales: The pipe manufacturer shall make whatever alterations are necessary to his equipment to enable the Contracting Agency's Sealer or State Inspector of Weights and Measures to check, calibrate, and seal the aggregate and cement scales used in the pipe production.

## 735.6 CURING OF PIPE:

(A) Steam Curing: The manufacturer shall provide adequate steam plant, piping, enclosures, and other facilities for curing the pipe. The enclosures shall be such that the temperature is maintained continuously between 110 and 150°F.

(B) Curing of the pipe shall not commence until the concrete has attained its initial set, but in any event not sooner than 1 hour and no later than 8 hours after placing of the concrete. Rate of rise of temperature shall not exceed 30°F per hour.

(C) Water Curing: The pipe shall be kept moist during daylight hours. The pipe, including the ends, shall be covered with burlap for the first 3 days, except that, if the pipe is kept constantly and completely wet with fog sprays during the daylight hours, the burlap covering may be omitted. If the manufacturer fails to proceed immediately with the required water curing, the surfaces of the concrete except joint surfaces that are to be grouted shall be sealed with an approved white pigmented sealing compound in accordance with Section 726.

**735.7 TESTS AND ACCEPTANCE:**

(A) Basis of Acceptance: The basis of acceptance for the reinforced concrete pipe shall be in accordance with ASTM C76, ASTM C506, or ASTM C507, as applicable, including the method stated in the special provision and as amended herein. However, the purchaser may, at his option, make concrete cylinder tests for the purpose of determining release dates for shipment of the pipe and for his information in regard to general quality of the concrete.

(B) Segregation of Material: The slump of the concrete mix shall not exceed 4 inches so as to preclude excessive segregation of the materials used and shall be proportioned so that the result shall be a homogeneous concrete mixture of such quality that the pipe will conform to the tests and design requirements of these specifications.

(C) A pipe has failed the D-load test when the opening crack exceeds .01 inch for a distance of 1 foot when measured at close intervals. These measurements are taken within the 1 foot measured span only when the crack line is more or less parallel to the axis of the pipe, as it is obvious that where the crack deviates substantially from parallel, and approaches a direction normal to the axis, that the edges of the crack tend to slip past each other, instead of opening up under load. The intent of the test is to measure the crack opening under stress.

(D) Porous or honeycomb concrete areas 6 inches or less in diameter may be removed and repaired. Pipe having defects or repairs greater than 6 inches in diameter will not be accepted.

(E) Any crack exceeding 1 foot in length that goes completely through the pipe, is not considered acceptable whether repaired or not, except that a single end crack that does not exceed the depth of the joint as measured from the end to the inside shoulder is acceptable.

(F) Any crack that is .01 inch in width for one-sixteenth inch in depth or deeper, for a length of 1 foot or more and continues as a hairline crack down to the reinforcing steel for over 1/2 the length of the pipe is not considered acceptable whether repaired or not.

(G) A single continuous hairline crack which does not extend to the reinforcing steel and not in excess of .01 inch in width for a distance of 1 foot is acceptable without repair. This type of crack, longer than 1 foot shall be repaired.

(H) Repairs shall be made by filling the defect with epoxy under pressure or by chipping out a V-Section to the full depth of the defect and repairing with an approved patching compound. The composition of the patching compound shall be furnished to the Engineer for approval.

(I) The words regarding acceptability and repair ability in the above paragraphs shall also apply when the crack occurs after loading of the pipe in the trench with backfill. Cracks wider than .01 inch shall be assumed to indicate overstress of the steel. In such case, the defective portion of the installation shall be replaced or repaired in a manner acceptable to the Engineer. After structural repairs are completed, the remaining cracks shall be filled as required above. All corrective measures shall be at the expense of the Contractor.

(J) Blisters: All pipe joints having blisters involving less than 1/4 the interior surface area shall be repaired by removing all loose material and exposing all hollow area and replacing with fresh concrete properly bonded, with an

acceptable bonding agent, and curing the repair with membrane coating. Blisters with larger areas are not considered to be repairable or acceptable.

(K) Painting of pipe, or portion of pipe, with grout to cover defects, minor or major, will not be permitted until approved by the Engineer.

(L) Where the modified or special design method, under the ASTM Standard is elected, acceptance on the basis of material tests and inspection of manufactured pipe for defects and imperfections shall be as stated in the ASTM Standard, and as amended herein. However, one joint of each size and D-load shall be selected by the Engineer for test purposes, and shall be tested for strength by the 3 edge bearing method, ASTM C497, with the results being used for confirmation of the submitted design for this D-load. If the pipe section tested fails in compression or shear before reaching the D-load specified, the test shall be considered a failure. Additional sections of the same diameter size and class shall be tested as specified above until the load requirements are met for the D-load strength. This test procedure shall be accomplished only once per manufacture regardless of the number of contractors he supplies. Placing of reinforcing steel in the test section of pipe to control shear cracks will not be permitted.

Requirements regarding defects shall be the same as stated above for standard pipe.

Concrete test requirements specified under compression tests of the ASTM Standard shall be amended in part to read as follows: "The average of any 5 consecutive strength tests of the laboratory-cured specimens shall be equal to or greater than the specified strength set forth in the design strength requirements table for the type and class of pipe being produced, and not more than 20 percent of the strength tests shall have values less than the specified strength. If more than 20 percent have values less than the specified strength, the lot represented shall be considered to be defective and not acceptable. In no case shall any cylinder tested fall below 80 percent of the specified design strength. If anyone cylinder falls below 80 percent of the specified design strength, then the entire production represented by that cylinder will not be accepted for purchase by the Contracting Agency unless the Contractor can demonstrate by coring to the satisfaction of the Engineer, that the cylinder in question is not representative of the entire production, or is representative of only a portion of the entire production."

During the fabrication of the pipe, concrete cylinders shall be made from a representative sample of the concrete. Concrete cylinders and slump tests shall be made by the Engineer or under his direct supervision. A set of cylinders shall consist of five. A minimum of one set shall be made for each day's production.

In vibrated and spun pipe, where the slump of the concrete approaches 0, the cylinders shall be made as follows:

Fill the cylinder can in 3 equal layers. Each layer shall be vibrated and assisted by rodding or other mechanical contrivance simultaneously until the moisture comes to the surface. Care shall be taken that the material is not over-vibrated which will cause segregation. When the moisture rises to the surface of the third layer, it is struck off and leveled. The cap is put on the cylinder and it is marked for identification. It shall then be steam cured in the same manner as the pipe, at the conclusion of which, the cylinders shall be brought into the laboratory for standard moist curing until the prescribed time for the compressive test.

The cylinders shall be made according to ASTM C31 where the pipe is manufactured with concrete that has enough slump for the material to be hand rodded. For reinforced concrete pipe made by the centrifugal method, the manufacturer may substitute centrifugally cast test cylinders for standard test cylinders. Centrifugally cast cylinders shall be made in accordance with AWWA C302 and cured in the same manner as normal test cylinders, except that the net area of the hollow cylinder will be used to determine the compressive strength.

**735.9 SANITARY SEWER PIPE:**

In addition to the above, sewer pipe shall meet the requirements of ASTM C76, reinforced concrete pipe having O-ring Rubber Gasket Joints with an interior lining of plastic liner plate in accordance with Section 741.

(A) Pipe Design: The wall thickness and the amount of circumferential reinforcement shall not be less than that required for the D-load indicated on the plans and required by the specifications. The calculations for wall thickness and amount of steel area per foot of pipe, having concrete lining, shall be for a pipe 2 inches larger in internal diameter than that specified on the plans. The additional concrete lining shall not be considered in the calculation for the area of steel required, nor in any of the load calculations.

D-load class of pipe and the date poured shall be plainly marked inside each pipe section. Specific approval must be obtained, prior to submitting a bid; to decrease the cover over the reinforcing steel at the joint should the steel interfere with the rubber gasket in the groove at the spigot end.

(B) Pipe Construction: Tamped or packer head pipe will not be allowed. Pipe having concrete lining shall have the internal diameters indicated on the plans, measured to the inside of the additional 1 inch of covering. The various sizes of pipe shall be centrifugally spun. Pipe having plastic liner plate shall be vibrocast to 1/2 inch tolerance to match the unlined pipe of the D-load indicated on the plans.

(C) Test and Acceptance: In addition to the statements above, any crack that goes completely through the pipe, regardless of length of crack is not considered acceptable whether repaired or not, except that a single end crack that does not exceed the depth of the joint as measured from the end to the inside shoulder is acceptable.

**735.10 ACCEPTANCE MARK:**

The Engineer may, at the place of manufacturer, indicate his acceptance of the pipe for delivery to the job by marking the pipe with the Contracting Agency's mark. Such acceptance, however, shall not be considered a final acceptance.

If the pipe is subsequently rejected, the mark placed thereon by the Engineer shall be defaced.

***- End of Section -***

# SECTION 607

# TRENCHLESS INSTALLATION OF SMOOTH WALL JACKING PIPE

## 607.1 DESCRIPTION:

The Contractor shall furnish all labor, material and equipment as required for the trenchless operation for the installation of thirty-inch inside diameter (30" ID) and larger, tongue and groove smooth wall jacking pipe installed by horizontal earth pipe jacking or hand tunneling.

## 607.2 MATERIALS:

The jacking pipe shall be tongue and groove smooth wall reinforced concrete pipe, ASTM C76 Class V.

## 607.3 TRENCHLESS OPERATION:

Before starting operations, the Contractor shall submit in accordance with Section 105.2, detailed shop drawing of the bore pit and receiving pit shoring, the jacking pipe, bulkheads, installation method, and the annular grouting mix design and grouting method. The proposed installation method and equipment shall be at the Contractor's option, no field construction shall commence until the proposed installation method is approved in writing by the Engineer. The Engineer's approval shall in no way relieve the Contractor of the responsibility for damages of any nature which might occur as a result of the methods used.

The bore and reception pits for the trenchless operation shall be shored to safeguard existing sub-structures and surface improvements against ground movement.

The leading section of jacking pipe shall be equipped with a tunnel shield. Excavation shall be carried out entirely within the tunnel shield and no excavation in advance thereof will be permitted. Every effort shall be made to avoid any loss of earth outside of the tunnel shield. Excavated material shall be removed from the jacking pipe as excavation progresses.

Upon completion of the jacking operation and if the grade of the jacking pipe is acceptable, all voids around the outside of the pipe shall be filled with grout.

## 607.4 DEWATERING:

All water encountered during the trenchless operation shall be disposed of by the Contractor in a manner that will not damage public or private property or create a nuisance or health problem. The cost of furnishing pumps, pipes and equipment for dewatering shall be considered incidental to the work and no additional payment shall be made.

## 607.5 MEASUREMENT AND PAYMENT:

Measurement for jacking pipe shall be the number of horizontal linear feet from the end of jacking pipe in the bore pit to the end of jacking pipe in the reception pit.

Payment for jacking pipe shall be full compensation for furnishing all labor, material, tools, and equipment required for the trenchless installation of the jacking pipe, complete in place including but not limited to shop drawings, dewatering, jacking pipe, bulkhead placement, grouting, and the excavation and backfilling of pits.

When a Contractor has the option of jacking and/or boring or open cut construction, and elects to construct a pipeline by the jacking and/or boring method, he will be paid for the replacement of such items of work as pavements, curb and gutter, sidewalk, driveway and alley entrances, as allowed for by open cut construction.

***- End of Section –***

# SECTION 618

## STORM DRAIN CONSTRUCTION

618.1 DESCRIPTION:

This section covers concrete pipe line and high density polyethylene (HDPE) pipe line construction used for the conveyance of irrigation water and storm drainage in streets, easements, and alley right of ways, under low hydrostatic heads.

Installation of pipe in laterals of Salt River Valley Water Users' Association or other irrigation districts shall conform to the specifications and permit of the respective irrigation district.

Installation of pipe in State Highways shall conform to the specifications and permit of the Arizona Department of Transportation.

618.2 MATERIALS:

The concrete pipe and HDPE pipe, specials, joints, gaskets, and testing shall be according to Sections 620 or 735, 736 and 738, except as specified below or as modified by special provisions.

(A) Specials: Pipe specials such as closure pieces, wyes, tees, bends, and manhole shafts shall be provided as indicated on the plans, and such specials shall be made equal in strength, diameter, and other physical characteristics to the standard straight pipe lengths by the use of extra concrete, extra reinforcing, or steel items. Drawings of specials shall be submitted to the Engineer for approval before their fabrication.

(B) Rubber Gasket Joints: When rubber gasket pipe is used, the joint shall be sealed with a continuous ring gasket made of a special composition rubber of such size and cross-section as to fill the annular space provided for it. The gasket shall be the sole element depended upon to make the joint watertight, and shall have smooth surfaces, free from pits, blisters, porosity, and other imperfections.

(1) Rubber Gaskets for RCP shall be in accordance with ASTM C443 or AASHTO M-315.

(2) Rubber Gaskets for HDPE pipe shall be in accordance with Subsection 738.2.3.

(C) Water Stops: Water stops will be required when connecting HDPE pipe to concrete structures, manholes, etc. The water stop shall comply with Section 738 and will be installed per manufacturer recommendations.

(D) Cement Mortar Joints for RCP will be in accordance with Subsection 736.3.

618.3 CONSTRUCTION METHODS:

Excavation, bedding, backfilling, and compaction or consolidation of backfill and bedding of trenches shall be accomplished in accordance with Sections 601 and 603 for HDPE pipe, except as specified below, or as modified by special provisions.

The Contractor shall over-excavate the trench and fill with select materials in accordance with standard details.

Where the cover over the top of the pipe is less than 10 feet, the maximum trench width is unrestricted. The pay width, however, for pavement replacement shall remain in accordance with Section 336. For pipe, with 10 feet or more cover, the maximum trench width shall be as required by Sections 601 and 603 for HDPE pipe.

The laying of the pipe shall be in finished trenches free from water or debris, and shall be commenced at the lowest point, with the spigot ends pointing in the direction of the flow. Each pipe shall be laid firmly and true to line and grade, in such manner as to form a close concentric joint with the adjoining pipe and to prevent sudden off-sets of the flowline. Any adjustment to line and grade shall be made by scraping away or filling in under the body of the pipe, never by wedging or blocking under the pipe ends.

Variation from prescribed alignment and grade shall not exceed 0.10 foot and the rate of departure from or return to established grade or alignment shall be no more than 1 inch in 10 feet of pipe line unless otherwise approved by the Engineer. For closures and deflection angles greater than 10 degrees, joints shall be made by use of a bend, specially manufactured fitting, or by a concrete collar, per standard details. Pipe shall be of the type, class and size shown on the plans or in the special provisions.

Trenchless installations of piping shall conform to the requirements of section 607.

All pipe, for permit construction, shall be reinforced concrete pipe, ASTM C76 Class III or HDPE pipe in accordance with ASTM F894, AASHTO 252 or AASHTO 294. For reinforced concrete pipe, the minimum cover from the top of the pipe to the finished grade shall be 2 feet and the maximum cover shall be 12 feet. The minimum and maximum cover for HDPE pipe shall be as specified in the special provisions or the manufacturer's recommendations.

All pipes installed under railroad tracks shall be reinforced concrete pipe, ASTM C76, Class V and the minimum cover over all pipes shall be as specified in the railroad permit and/or special provisions. Bedding shall be in accordance with standard details.

The allowable water loss for irrigation lines shall not exceed 2 gallons per hour per 100 feet of pipe per inch of diameter of pipe, under a minimum test head of 1 foot above the top of the pipe at the upper end when tested in accordance with the procedures of Section 615.

~~618.4 JACKING PIPE:~~

~~At locations where jacking is required, the storm drain line shall be installed by jacking to the lengths indicated on the plans, in accordance with the following. The methods and equipment used in jacking reinforced concrete pipe conduit shall be optional with the Contractor, provided that the proposed method is first approved in writing by the Engineer. Such approval, however, shall in no way relieve the Contractor of the responsibility for damages of any nature which might occur as a result of the methods used.~~

~~Only workmen experienced in the operation of jacking concrete conduit shall be used.~~

~~The driving ends of the conduit shall be properly protected and the conduit shall be driven true to alignment and grade. The deviation from true line and grade at any single point within the jacked portion shall be limited to 0.5 feet horizontal deviation from line and ±0.2 feet vertical deviation from grade.~~

~~Any section of conduit which may show signs of failure shall be removed and replaced with a new section of precast conduit or with a cast-in-place section, which in the opinion of the Engineer is adequate to carry the loads imposed upon it. In this respect it shall be understood that where pipe is specified on the drawings to be jacked into place the jacked pipe shall be reinforced concrete of the strength specified in these specifications and the design of such pipe is based upon superimposed loads and not upon loads which may be placed upon the pipe as a result of jacking operation. Any increase in pipe strength required in order to withstand jacking loads shall be the responsibility of the Contractor. The reinforcing shall be circular and of either single or double cage design.~~

~~Spacer blocks shall be placed in the inside circular space which will allow sufficient width for point mortaring when jacking is completed and to equalize pressures during jacking. Three grout holes per 8-foot section of pipe shall be made during manufacturing.~~

~~Double rubber gaskets and band type joints shall be provided for 36 inches diameter and larger pipe.~~

~~One hole shall be made on the top midway between the ends. Two additional holes, each approximately 1.5 feet from each end and approximately midway between the springline and top on opposite sides shall be made.~~

~~Where the nature of the soil, or the structure under which the conduit is being jacked is such that, there is increased danger of a cave-in or damage to said structure, the method of jacking the conduit shall be as specified below.~~

~~The leading section of conduit shall be equipped with a jacking head securely anchored thereto to prevent any wobble or alignment variation during jacking operations. The length and details of the jacking head shall be subject to the written approval of the Engineer. Excavation shall be carried out entirely within the jacking head and no excavation in advance thereof will be permitted. Every effort shall be made to avoid any loss of earth outside of the jacking head. Excavated material shall be removed from the conduit as excavation progresses, and no accumulation of such material within the conduit will be permitted.~~

~~Upon completion of the jacking operations, all voids around the outside face of the conduit shall be filled by grouting through each of the previously constructed grout holes to the satisfaction of the Engineer. The grout shall be a mixture of one part cement to three parts sand and a mixture by volume.~~

~~Grouting equipment and material shall be on the job before jacking operations are started in order that grouting around the jacked conduit may be started immediately after the jacking operation. After grouting, the holes in the conduit shall be repaired to the satisfaction of the Engineer.~~

618.~~5~~ 4 VIDEO INSPECTION OF NEW MAINLINE STORM DRAINS:

The Contractor shall provide the Engineer with an annotated video inspection record (either VHS or DVD format) of the new mainline storm drain pipeline. The video shall clearly show all joints, seals, connecting pipes, and manholes. This video shall be provided to the Engineer, and reviewed and approved by the Engineer prior to the Contractor being allowed to place the final pavement over the storm drain line. No separate payment will be made for this inspection; the cost of the video inspection shall be included in the cost of the pipe.

618.~~6~~ 5 MEASUREMENT:

(A) Main Line Pipe: Shall be the number of linear feet of pipe laid as measured along the pipe axis.

Unless hereinafter modified, measurement shall extend through manholes when no change in pipe size occurs. When a change in pipe size occurs within a manhole, unless hereinafter modified, measurement for each size will be taken to the centerline of the manhole.

(B) Connecting Pipe: Shall be the number of linear feet of pipe installed, as measured along the pipe axis from a main line pipe, or a manhole, or a catch basin to a catch basin, or a plugged end, and shall include the portions of the connecting pipe embedded in the above structures.

~~(C) Jacked Pipe: Shall be made at the ground surface and shall be the number of linear feet of ground surface undisturbed by the cut and cover construction on either side of the jacked section.~~

618.~~7~~ 6 PAYMENT:

(A) Main Line Pipe: Will be paid at the unit price bid per linear foot, to the nearest foot, for each size and type of pipe and shall be compensation in full for furnishing and installing the type of pipe as specified and as shown on the plans including removal of obstructions, excavation, bedding, backfilling, compacting, testing, joint materials, joining, collars, and field closures.

(B) Connecting Pipe: Will be paid at the unit price bid per linear foot, to the nearest foot for each size of pipe and shall be compensation in full for furnishing and installing complete in place as shown on the plans and as specified, the connecting pipe and specials including spur connections, removal of obstructions, excavation, bedding, backfilling, compacting, joint materials, joining, collars, field closures, and testing.

~~(C) Jacked Pipe: Will be paid the same as for main line pipe.~~

*- End of Section -*

**MARICOPA COUNTY**
***Department of Transportation***

**MEMORANDUM**

**Date:** March 24, 2014

**To:** MAG Specifications and Details Committee

**From:** Robert Herz, MCDOT Representative

**Subject:** Revision to Section 726 CONCRETE CURING MATERIALS **Case 14-09**

**PURPOSE:** Replace AASHTO references discontinued in 2010 with current ASTM standards.

**REVISION:** Replace AASHTO M 171 with ASTM C171 and replace AASHTO M 148 with ASTM C309.

## SECTION 726

## CONCRETE CURING MATERIALS

### 726.1 GENERAL:

Curing materials shall consist of waterproof paper, polyethylene film or liquid membrane-forming compounds which, when applied to fresh concrete, will inhibit moisture loss and reduce temperature rise during the curing period. All curing materials and methods shall be approved by the Engineer prior to use. Wet coverings such as burlap, cotton mats, or other moisture-retaining fabrics also may be used, or may be required by special provisions.

### 726.2 MATERIALS:

(A) Waterproof paper, or polyethylene film, shall conform ~~with~~to ~~AASHTO M 171~~ ASTM C171.

(B) Liquid membrane-forming compounds shall conform ~~with~~to ~~AASHTO M 148~~ ASTM C309. Type 1 compound with either a Class A or Class B vehicle shall be used for concrete structures, except bridge decks, approach slabs, and portland cement concrete pavement. Type 2 white pigmented compound, with either a Class A or Class B vehicle shall be used for ~~P~~portland cement concrete pavement, bridge decks and approach slabs.

(C) Burlap cloth made from jute or kenaf shall conform to AASHTO M-182.

***- End of Section -***

2901 West Durango Street Phoenix, Arizona 85009 Phone: 602-506-4760 Fax: 602-506-5969

# Water/Sewer Working Group Meeting

Meeting Notes
March 18, 2014

**Opening:**
A meeting of the Specifications and Details Water/Sewer Working Group was called to order by chair Jim Badowich on March 18, 2014, at 1:35 p.m. in the MAG Cottonwood Room.

**1. Introductions/Attendance**
Tony Ayala (Avondale), Jim Badowich (Avondale), Arturo Chavarria (Hanson), Phil Gale (Geneva Polymer), Paul Nebeker (Pipe Right), Matt Rogers (ADS), Mike Sanders (AZUCA/Fishel), Gordon Tyus (MAG), Arvid Veidmark (Specialized Services), Stew Waller (Rinker), Warren White (Chandler)

**2. Manhole Revisions/Update (Cases 13-21 and 13-22)**
Craig Sharp was not present, so this item was not discussed in detail, however Jim Badowich did discuss the idea of whether to add manhole vacuum testing as a future MAG spec. He said that Troy Tobiasson from Goodyear thought the law requiring it was repealed. Paul Nebeker said the City of Phoenix still requires it. Warren White said he thought Chandler required it for manholes in arterials. Phil Gale thought it was a good test to find flaws. Paul Nebeker wanted clarification that the test was for sanitary sewers and not storm sewers. Mr. Badowich agreed and said he wanted to look at agency supplements to investigate the idea further.

Mr. Badowich also said he received a message from Jami Erickson, that she would not be able to attend, but that she is working on the new testing Section 611 that will be a consolidation of existing testing requirements.

**3. Water Testing/Flushing**
Rob Godwin was not present so this item was postponed for the next meeting.

**4. Revisions to Rigid and Flexible Pipe Installation (Case 13-15)**
Warren White provided a complete update packet for Case 13-15 that included revisions to Section 101: Definitions, updated Details 200-1 and 200-2 as well as the latest drafts of Sections 601, 603, 615 and 618. Most of the rest of the meeting was a thorough review of the changes and discussions about this case.

Mr. White first presented the new and changed definitions in Section 101. Mr. White explained that these definitions better match those used by ASTM. There was discussion clarifying what is meant by foundation, bedding, haunching, initial backfill and final backfill. Mr. Veidmark suggested being consistent with the terms Initial Backfill and Backfill (Initial) so that it would be easy to find in the definitions section. Mr. Tyus suggested cross referencing the terms.

Details 200-1 and 200-2 were updated to reflect the change in terminology. The major change to the drawing was the trench cross-section detail on 200-2. Mr. Badowich suggested moving the springline note so it wasn't confused with the haunching, and to remove the (typ) note. Mr.

Badowich said there may need to be more options for the different trench repair details on 200-1, but it would need to be a separate future case.

Next the group reviewed Section 601 in detail. Section 601.4 dealing with the foundation, bedding, and backfill of the trench was discussed at length to provide the correct terminology, a default material (such as granular material) or CLSM and the was also discussion about when native material can be used for final backfill. Mr. Nebeker said MAG AB (from Section 702) was typically used and wondered if it met the requirements for granular material. Members said they would check on this. Matt Rogers said that for flexible pipe, you could refer to ASTM requirements for different classes A, B, C, etc.

Attendees also discussed the compaction requirements for the bedding and backfill. It was thought to go back to requiring 95% compaction from 1 foot above the top of the pipe to the bottom of the trench as shown in Table 601-2. (This is what Phoenix now requires.) Mike Sanders and Paul Nebeker discussed the methods of construction for development and CIP work, whether the bedding should be loose or not, and newer methods of compaction that do not require 8" lifts. Changes and updates to section 601 were carefully recorded by Mr. White who will make updates prior to submitting the revision to the full committee.

Mr. White said that he would make the same kind of changes to Section 603 where relevant to keep them consistent, and asked if there were any other areas of 603 that needed changes. One subsection discussed was the CONTRACTOR CERTIFICATION OF INSTALLATION PROCEDURES. Mr. Veidmark said he thought this was taken care of by the certification that contractors are required to have. Mr. Nebeker recalled that it was added to the spec because there was a problem with an HDPE installation years ago, and members at the time wanted more control over the contractor's installation methods. Mr. Badowich thought this could be used as a two edged sword and suggested removing it.

Next the group review Section 615: Sewer Line Construction. Mr. White noted that this would be much smaller now, and assumed that the testing requirements would be moved into the proposed Section 611 and referenced. Mr. Veidmark suggested for the Jacking Pipe subsection, adding a reference to 607 in addition to 602. There was also consensus to make the Measurement and Payment sections consistent in 615 and 618.

For Section 618: Storm Drain Construction, there were questions about whether the rubber gaskets and other materials referenced in 618.2, should be specific and included in the separate pipe materials sections such as 738. Also elastromeric gaskets are used rather than rubber. Mr. White agreed with this idea, but thought this may need to be tackled as a separate future case.

**5. Jacking Tunneling and Boring**

Arvid Veidmark handed out the latest draft (version 6) of Section 607. It included additional revisions from Bob Herz, and replaces part of Section 618. Matt Rogers asked why Class V pipe was required. Mr. Veidmark explained that this was jacking of the pipe itself not casing, and that extra strength was needed. He said Mr. Herz suggested this case be completed prior to the revisions to Section 618. Mr. Tyus agreed that it should be down prior or concurrently with

Case 13-15. Mr. Badowich said he would work with Mr. Veidmark and sponsor the case at the next committee meeting.

Mr. Veidmark then handed out a new potential case for a new Section 608 HORIZONATAL DIRECTIONAL DRILLING FOR 2" AND SMALLER WATER SERVICES. Mr.Badowich asked why it was limited to water, since agencies also use the technology for dry utilities such as for ITS and street signals. Mr. Veidmark said he thought the direction from the committee was to start with water services, but that other options could be added. Other materials besides copper were also discussed. Members were asked to review the draft and provide feedback. He was also going to have industry representatives provide feedback.

**6. Next Meeting Date**

The next meeting of the Water/Sewer working group is scheduled for Tuesday, April 22nd at 1:30 p.m. at the MAG office.

The meeting was adjourned at 4:30 p.m.

# Report to MAG Technical Committee
# Meeting March 20, 2014
# Asphalt and Materials Working Group meetings
# By Chairmen, Jeff Benedict, Brian Galimore

The meeting was held on noon on March 20, 2014 at the ARPA offices.
Present at the meeting was Bob Herz (MCDOT), Brian Gallimore (WSP), Don Cornelison (Speedie), Scott Thompson, Trey Billingsley (Fisher), Greg Groneberg (S.W. Asphalt), Doug Laquey (S.W. Asphalt), Adrian green, (Vulcan), John McClafferty (Drake), Richard Kissling (S.W. Asphalt), Rod Ramos (Scottsdale), Rob Goodwin (City of Goodyear), Jeff Hearne (SRMG), and Gordon Tyus (MAG).

Cases for submittal:
Case 14-06 section 718 revisions to table 718-1, type C. to bring the specification into current production limits for this material. There were no changes yet to the table. The manufacturer was due to review and recommend changes. It is hoped that the recommended changes are ready by the April meeting.

Section 321 with regard to "permit work" was discussed at length. A meeting with industry will be at Speedie & Associates on 3/27/14 the goal is to use some of the Town of Gilbert supplements to MAG 321. This may not be ready for the main committee this year.

Section 321 with regard to the allowance of "warm mix" technologies was passed out and discussed. Adrian Green and Phil Feliz will review section 710 and recommend some language to allow these technologies. It is expected that this will become a case after the next working group meeting.

Brian Gallimore volunteered to work on private (out of right of way) language to for pavements and this will be brought back to the main working group to decide where this language should be inserted.

Tom Condit with the Town of Gilbert has a specification for Decorative asphalt stamping. (Gilbert 322) It was passed out and reviewed. It was recommended that limits for placing final color coatings for various pavement types. The working group will help Tom place this section as a case to full committee.

The announcement of the Asphalt Institute presentation by Bob Humer on May 1st discussing asphalt binder performance was explained to the group.

The next working group meeting will be held on 4-24-2014 at the ARPA office at noon. This meeting was adjourned at 1:12 p.m.

# **MAG** Concrete Working Group

## Meeting Notes

Thursday, March 20, 2014, 1:00 pm at the ARPA Offices

### Present:

See attached attendance sheet.

### Discussion:

1) Revision to Section 725 – Jeff Hearne (Revision 3-11-14)
   Several areas were discussed – Section 725.2.1 on additional fly ash, percentages and new column to Table 725-1 – additional work is needed to make the requirements clear
   Section 725.3 on sand composite requirements – no issues
   Section 725.7.2 on initial mixing requirements with some additional wording regarding the manufacturer's plate will be added
   Moving the paragraph on water addition to Section 725.9(A) – additional references and verbiage from to ASTM C94 will be added for clarification
   Section 725.8.2 elimination of the sampling frequency of every 50cy

2) Revision to Section 324 on PCCP – Jeff Hearne (Revision 2-5-14)
   The most recent revision was discussed particularly the requirements for a dowel bar system with comparisons to ADOT Sections 401 and 1003 and AASHTO M254 requirements. Additional wording will be included eliminating the current system

### Date for Next Meeting:

The next meeting is scheduled for **April 24, 2014 @ 1:00 pm** in the ARPA offices.
(Following the Asphalt and Materials Working Group meetings)

Any and all participants are welcome and encouraged to be involved.

## MAG Concrete Working Group

## Thursday, March 20, 2014

| Attendance Initials | | | | | |
|---|---|---|---|---|---|
| GT | Gordon Tyus | MAG | Maricopa Association of Governments | 602-254-6300 | GTyus@azmag.gov |
| BH | Bob Herz | McDOT | Maricopa County | 602-506-4760 | rherz@mail.maricopa.gov |
| JS | John Shi | McDOT | Maricopa County | | johnshi@mail.maricopa.gov |
| | Jacob Rodriguez | Utility | Salt River Project | 602-236-8613 | jacob.rodriguez@srpnet.com |
| | Syd Anderson | Municipality | City of Phoenix | 602-495-2047 | syd.anderson@phoenix.gov |
| | Richard Soltero | Municipality | City of Phoenix | 602-495-2063 | richard.soltero@phoenic.gov |
| | Don Hansen | Municipality | City of Chandler | 480-215-9264 | don.hansen@chandleraz.gov |
| | Bob Draper | Municipality | City of Mesa | 480-644-3822 | bob.draper@mesaaz.gov |
| RG | Rob Godwin | Municipality | City of Goodyear | 623-693-2457 | rob.godwin@goodyearaz.gov |
| | Brandon Forrey | Municipality | City of Peoria | 623-773-7201 | brandon.forrey@peoriaaz.gov |
| BG | Brian Gallimore | Contractor | WSP Inc | 623-434-5050 | bgallimore@wspinc.net |
| JH | Jeff Hearne | Producer | Salt River Materials Group | 480-850-5757 | jhearne@srmaterials.com |
| | Mike Kohout | Producer | Cemex | 602-220-5631 | mkohout@cemexusa.com |
| | Robert Barkley | Producer | Hanson Aggregates of Arizona | 602-685-3436 | robert.barkley@hansen.biz |
| | Tom Romero | Producer | CPC Southwest Materials | 520-744-3222 | tromero@calportland.com |
| AG | Adrian Green | Producer | Vulcan Materials | 602-528-8692 | greenaj@vmcmail.com |
| | Tom Villa | Producer | Rock Solid Concrete | 602 339-7375 | tvilla@rocksolidconcrete.com |
| | Angelo Trujillo | Producer | BASF Admixtures | 480-824-3733 | angelotrujillo@cox.net |
| | Derek Imperial | Producer | BASF Admixtures | 480-993-6948 | derek.imperial@basf.com |
| | Greg Dorsch | Producer | BASF Admixtures | 480-363-5646 | greg.dorsch@basf.com |
| | David Allen | Producer | Boral Materials | 602-861-5100 | david.allen@boral.com |
| JB | Jeff Benedict | Producer | Valero Energy Corp | 602-989-6121 | Jeff.Benedict@valero.com |
| | Matthew Marcus | Testing Laboratory | Ninyo & Moore | 602-243-1600 | mmarcus@ninyoandmoore.com |
| | William Smith | Testing Laboratory | Terracon | 480-897-8200 | whsmith@terracon.com |
| ST | Scott Thompson | Testing Laboratory | Cardno ATC | 602-290-0840 | scott.thompson@cardno.com |
| | Bob Kostelny | Testing Laboratory | Cardno ATC | 480-244-4350 | robert.kostelny@cardno.com |
| DC | Don Cornelison | Testing Laboratory | Speedie and Associates | 602-997-6391 | dcornelison@speedie.net |
| | Raphael Tixier | Testing Laboratory | Western Technologies Inc. | 602-437-3737 | r.tixier@wt-us.com |
| | Mike Whitman | Testing Laboratory | Western Technologies Inc. | 602-437-3737 | mike.w@wt-us.com |
| | Phillip Feliz | Testing Laboratory | Western Technologies Inc. | 602-437-3737 | phil.f@wt-us.com |
| PK | Peter Kandaris | Consultant | DGA | 602-236-8613 | pkandaris@dgacon.com |
| | Steve Trussel | ARPA | Arizona Rock Products Association | 602-271-0346 | steve@azrockproducts.org |
| | Dan Duffy | ARPA | Arizona Rock Products Association | 602-271-0346 | dan@azrockproducts.org |
| JM | John McClafferty | Producer | Drake Materials | 602-881-1650 | jmcclafferty@drakeus.com |

**LIST OF MEMBERS**
**For**
**MAG Standard Specifications and Details Committee**



# AGENCY MEMBERS

| | |
|---|---|
| **CITY OF AVONDALE**<br>Engineering Department<br>11465 W. Civic Center Drive, Suite 120<br>Avondale, AZ 85323-6804 | Jim Badowich (Vice Chair)<br>Phone: (623) 333-4222<br>Fax: (623) 333-0420<br>E-mail: jbadowich@avondale.org |
| **CITY OF BUCKEYE**<br>530 East Monroe Avenue<br>Buckeye, AZ 85326 | Craig Sharp<br>Phone: (623) 349-6229<br>FAX: (623) 349-6221<br>E-mail: csharp@buckeyeaz.gov |
| **CITY OF CHANDLER**<br>Public Works Department<br>Mail Stop 411, P.O. Box 4008<br>Chandler, AZ 85244-4008 | Warren White, P.E.<br>Phone: (480) 782-3337<br>FAX: (480) 782-3350<br>E-mail: warren.white@chandleraz.gov |
| **CITY OF EL MIRAGE**<br>Engineering Department<br>12145 NW Grand Avenue<br>El Mirage, AZ 85335 | Antonio Hernandez<br>Phone: (623) 980-9987<br>E-mail: ahernandez@cityofelmirage.org |
| **TOWN OF FLORENCE**<br>755 North Main Street, PO Box 267<br>Florence, AZ 85132 | Wayne Costa<br>Phone: (520) 868-7617<br>E-mail: wayne.costa@florenceaz.gov |
| **TOWN OF GILBERT**<br>90 E. Civic Center Dr.<br>Gilbert, AZ 85296 | Tom Condit, PE<br>Phone: (480) 503-6815<br>FAX: (480) 503-6170<br>E-mail: tom.condit@gilbertaz.gov |
| **CITY OF GLENDALE**<br>Engineering Department<br>5850 West Glendale Avenue – Suite 315<br>Glendale, AZ 85301 | Mark Ivanich, P.E.<br>Phone: (623) 930-3654<br>FAX: (623) 915-2861<br>E-mail: mivanich@glendaleaz.com |
| **CITY OF GOODYEAR**<br>Engineering Department<br>195 N. 145th Avenue, Building D<br>Goodyear, AZ 85338 | Troy Tobiasson<br>Phone: (623) 882-7979<br>FAX: (623) 882-7949<br>E-mail: troy.tobiasson@goodyearaz.gov |
| **MARICOPA COUNTY DEPARTMENT OF TRANSPORTATION**<br>2901 West Durango<br>Phoenix, AZ 85009-6357 | Bob Herz<br>Phone: (602) 506-4760<br>FAX: (602) 506-5969<br>E-mail: rherz@mail.maricopa.gov |

**LIST OF MEMBERS**
**For**
**MAG Standard Specifications and Details Committee**



**CITY OF MESA**
Engineering Design Division
20 E. Main Street, PO Box 1466
Mesa, AZ 85211-1466

Bob Draper, P.E.
Phone: (480) 644-3822
FAX: (480) 644-3392
E-mail: Bob.Draper@mesaaz.gov

**CITY OF PEORIA**
Public Works/Engineering
9875 N 85th Avenue
Peoria, AZ 85345

Dan Nissen
Phone: (623) 773-7214
FAX: (623) 773-7211
E-mail: Dan.Nissen@peoriaaz.gov

**CITY OF PHOENIX**
Water Services Department
200 W. Washington Street, 8th Floor
Phoenix, AZ 85003

Jami Erickson
Phone: (602) 261-8229
FAX: (602) 495-5843
E-mail: jami.erickson@phoenix.gov

**CITY OF PHOENIX**
Street Transportation Department
200 W. Washington Street, 5th Floor
Phoenix, AZ 85003-1611

Syd Anderson
Phone: (602) 495-2047
FAX: (602) 495-2016
E-mail: syd.anderson@phoenix.gov

**CITY OF SCOTTSDALE**
9191 E. San Salvador Drive
Scottsdale, AZ 85258

Rodney Ramos, P.E.
Phone: (480) 312-5641
FAX: (480) 312-5539
E-mail: rramos@scottsdaleaz.gov

**CITY OF SURPRISE**
Public Works Department
16000 N Civic Center Plaza
Surprise, AZ 85374-7470

Dan Shaffer
Phone: (623) 222-7039
FAX: (623) 222-6006
E-mail: shaffer@surpriseaz.gov

**CITY OF TEMPE**
Public Works Department
31 E. 5th Street
Tempe, AZ 85281

Tom Wilhite, P.E. (Chair)
Phone: (480) 350-2921
FAX: (480) 350-8591
E-mail: tom_wilhite@tempe.gov

**TOWN OF YOUNGTOWN**
12030 Clubhouse Square
Youngtown, AZ 85363

Gregory Arrington
Phone: (623) 933-8286
Cel: (623) 640-8441
E-mail: garrington@youngtownaz.org

**VALLEY METRO**
101 N. First Avenue, Suite 1100
Phoenix, AZ 85003

Harvey Estrada
Phone: (602) 495-4514
E-mail: hestrada@valleymetro.org

# ADVISORY MEMBERS

## ASSOCIATIONS:

**ARIZONA ROCK PRODUCTS ASSOCIATION**
1825 W. Adams, Phoenix, Arizona 85007
Phone: (602) 271-0346 FAX: (602) 252-5870

Valero Energy Corp.
P.O. Box 2179
Coolidge, AZ 85128

Jeff Benedict
Phone: (520) 777-2456
Cell: (602) 989-6121
E-mail: Jeff.benedict@valero.com

Salt River Materials Group
8800 E. Chaparral Road, Ste 155
Scottsdale, AZ 85250

Jeff Hearne
Phone: (480) 850-5757
Mobile: (602) 321-6040
FAX: (480) 850-5758
E-mail: jhearne@srmaterials.com

**ASSOCIATED GENERAL CONTRACTORS:**
1825 W Adams Street, Phoenix, Arizona
Phone: (602) 252-3926

WSP, Inc.
7777 N. 70th Avenue
Glendale, AZ 85027

Brian Gallimore
Phone: (623) 434-5050
FAX: (623) 434-5059
E-mail: bgallimore@wspinc.net

Vulcan Materials Company
2526 East University Drive
Phoenix, AZ 85034

Adrian Green
Phone: (602) 528-8692
Cell: (602) 721-1456
E-mail: greenaj@vmcmail.com

**ARIZONA UTILITY CONTRACTORS ASSOCIATION**:
P.O. Box 66935, Phoenix, Arizona 85082 www.wedigaz.org
Phone: (480) 775-3943 FAX: (602) 532-7573

SSC Boring
2001 W. North Lane Ste: A
Phoenix, AZ 85021

Arvid Veidmark III
Phone: (602) 997-6164
E-mail: arvid@sscboring.com

Team Fishel
1819 S. 27th Ave
Phoenix, AZ 85009

Mike Sanders
Phone: (602) 233-0658
E-mail: mmsanders@teamfishel.com

PUBLIC UTILITIES:

**SALT RIVER PROJECT**
P.O. Box 52025
Mail Station XCT317
Phoenix, AZ 85072

Jacob Rodriguez
Phone: (602) 236-6459
E-mail: jacob.rodriguez@srpnet.com

INDEPENDENT:

DGA Consulting, PLLC
325 E. Southern, #109
Tempe, AZ 85282

Peter Kandaris
Phone: (480) 273-9445
E-mail: pkandaris@digioiagray.com

PIPE RIGHT NOW, LLC.
7349 W. Camron Dr.
Peoria, AZ 85345

Paul R. Nebeker
Phone: (623) 979-5154
FAX: (623) 878-4484
E-mail: pnebeker@cox.net

# MAG ADMINISTRATIVE STAFF

**MARICOPA ASSOCIATION OF GOVERNMENTS**
302 N. 1st Avenue, Suite 300
Phoenix, AZ 85003

Gordon Tyus
Phone: (602) 452-5035
FAX: (602) 254-6490
E-Mail: gtyus@azmag.gov