May 28, 2014

TO: Members of the MAG Standard Specifications and Details Committee

FROM: Tom Wilhite, City of Tempe, Chair

SUBJECT: MEETING NOTIFICATION AND TRANSMITTAL OF TENTATIVE AGENDA

Wednesday, June 4, 2014 at 1:30 p.m.
MAG Office, Suite 200 (Second Floor), Ironwood Room
302 North 1st Avenue, Phoenix

A meeting of the MAG Specifications and Details Committee has been scheduled for the time and place noted above. Members of the MAG Specifications and Details Committee may attend the meeting either in person, by videoconference or by telephone conference call. If you have any questions regarding the meeting, please contact Committee Chair Tom Wilhite at 480-350-2921 or Gordon Tyus, MAG staff at 602-254-6300.

In 1996, the Regional Council approved a simple majority quorum for all MAG advisory committees. If the MAG Specifications and Details Committee does not meet the quorum requirement, no action can be taken. Attendance at the meeting is strongly encouraged.

Pursuant to Title II of the Americans with Disabilities Act (ADA), MAG does not discriminate on the basis of disability in admissions to or participation in its public meetings. Persons with a disability may request a reasonable accommodation, such as a sign language interpreter, by contacting Gordon Tyus at the MAG office. Requests should be made as early as possible to allow time to arrange the accommodation.

It is requested (not required) that written comments on active cases be prepared in advance for distribution at the meeting.

MAG Standard Specifications and Details Committee
TENTATIVE AGENDA
June 4, 2014

	COMMITTEE ACTION REQUESTED
1. Call to Order and Introductions	
2. Call to the Audience An opportunity is provided to the public to address the MAG Specifications and Details Committee on items that are not on the agenda that are within the jurisdiction of MAG, or non-action agenda items that are on the agenda for discussion or information only. Citizens will be requested not to exceed a three minute time period for their comments. A total of 15 minutes will be provided for the Call to the Audience agenda item, unless the committee requests an exception to this limit. Please note that those wishing to comment on agenda items posted for action will be provided the opportunity at the time the item is heard.	2. Information.
3. Approval of May 7, 2014, Meeting Minutes	3. **Review and approve minutes of the May 7, 2014 meeting.**
Carry Forward Cases from 2013	
4. Case 13-15: Revisions to MAG Sections 101, 601, 603, 615 and 618 for installing rigid and flexible pipe. Update Details 200-1, 200-2.	4. Information and discussion. Sponsor: Warren White, Chandler,
5. Case 13-21: Create a new Section 742 Pre Cast Manhole Bases. Add details for construction and installation. Update existing manhole details.	5. Information and discussion. Sponsor: Craig Sharp, Buckeye *Updated*
6. Case 13-22: Update Sections 625 and 775 to remove references to steps and the use of bricks in manholes.	6. Information and discussion. Sponsor: Craig Sharp, Buckeye *Updated*
New Cases for 2014	
7. Case 14-01: Misc. Corrections A. Change "transverse" to "longitudinal" in Section 321.8.2 B. In section 739.1 delete the extra occurrence of the word 'Pipe'.	7. Information and discussion. Sponsors: Rod Ramos, Scottsdale Bob Herz, MCDOT *Updated*

8.	Case 14-02: Revision to Section 405 Monuments and Detail 120 Update specification to match current details and requirements.	8. **Information, discussion and possible action.** Sponsor: Bob Herz, MCDOT *Updated*
9.	Case 14-03: Updates to Guardrail Details Revisions to Section 415 and/or inclusion of MCDOT guardrail details.	9. Information and discussion. Sponsor: Bob Herz, MCDOT
10.	Case 14-05: Revision to Section 324 Portland Cement Concrete Pavement Update section for current methods.	10. **Information, discussion and possible action.** Sponsor: Jeff Hearne, Concrete Working Group
11.	Case 14-06: Revisions to Section 718 Preservation Seal for Asphalt Concrete Update specifications for Type 'C'	11. Information and discussion. Sponsor: Jeff Benedict, Asphalt Working Group
12.	Case 14-07: Revision to Section 735 Reinforced Concrete Pipe and Section 618 Storm Drain Construction Add Elliptical and Arch Reinforced Concrete Pipe	12. **Information, discussion and possible action.** Sponsor: Bob Herz, MCDOT
13.	Case 14-08: New Section 607: Trenchless Installation of Smooth Wall Jacking Pipe Includes Revisions to Section 618: Storm Drain Construction	13. **Information, discussion and possible action.** Sponsor: Jim Badowich, Water/Sewer WG *Updated*
14.	Case 14-09: Revision to Section 726 Concrete Curing Materials Replace discontinued AASHTO references with current ASTM standards.	14. **Information, discussion and possible action.** Sponsor: Bob Herz, MCDOT
15.	Case 14-10: Include Language to Allow Use of Warm Mix Asphalt Update Sections 321 and 710.	15. Information and discussion. Sponsor: Jeff Benedict, Asphalt Working Group *Updated*
16.	Case 14-11: Delete the use of Asbestos-Cement Pipe in Valve Box Installations. Update Section 610.7, Details 391-1, 391-2, and 392	16. Information and discussion. Sponsor: Bob Herz, MCDOT *NEW*
17.	Other New Cases	17. Information and discussion.

General Discussion

18.	Working Group Reports	18.	Information and discussion. Water/Sewer Chair: Jim Badowich 05/20/14 Meeting Asphalt Chair: Jeff Benedict 05/22/14 Meeting Materials Chair: Brian Gallimore 05/22/14 Meeting Concrete Chair: Jeff Hearne 05/22/14 Meeting Outside ROW: Peter Kandaris
19.	General Discussion Move July meeting date from July 2 to July 9.	19.	**Information, discussion and possible action.**
20.	Request for Future Agenda Items	20.	Information and discussion.

Adjournment

MEETING MINUTES FROM THE MARICOPA ASSOCIATION OF GOVERNMENTS STANDARD SPECIFICATIONS AND DETAILS COMMITTEE

May 7, 2014

Maricopa Association of Governments Office, Ironwood Room
302 North First Avenue
Phoenix, Arizona

AGENCY MEMBERS

Jim Badowich, Avondale, Vice Chair
Craig Sharp, Buckeye
Warren White, Chandler
Antonio Hernandez, El Mirage
* Wayne Costa, Florence
Yannick Mets, Gilbert (proxy)
* Mark Ivanich, Glendale
Bob Herz, MCDOT
Julie Christoph, Mesa
* Dan Nissen, Peoria
* Syd Anderson, Phoenix (St. Trans.)
Jami Erickson, Phoenix (Water)
Roy Herrington, Scottsdale (proxy)
Dan Shaffer, Surprise (proxy)
Tom Wilhite, Tempe, Chair
* Harvey Estrada, Valley Metro
Gregory Arrington, Youngtown

ADVISORY MEMBERS

Jeff Benedict, ARPA
Arvid Veidmark, AZUCA
* Mike Sanders, AZUCA
Adrian Green, AGC
Brian Gallimore, AGC
Jeff Hearne, ARPA
Peter Kandaris, Independent
* Paul R. Nebeker, Independent
Jacob Rodriguez, SRP

MAG ADMINISTRATIVE STAFF

Gordon Tyus

* Members not attending or represented by proxy.

GUESTS/VISITORS

Jim Anderson, Olson Precast
Mike Molina, Oldcastle Precast
Stew Waller, Rinker

1. Call to Order

   Chair Tom Wilhite called the meeting to order at 1:34 p.m. He welcomed new members to the committee: Tom Vassalo of Goodyear and Julie Christoph of Mesa. He also introduced two proxies attending the meeting: Yannick Mets representing Gilbert and Roy Herrington representing Scottsdale.

2. Call to the Audience

   Chair Wilhite opened the call to the audience. No members of the audience requested to speak.

3. Approval of Minutes

   The members reviewed the April 2, 2014 meeting minutes. Jim Badowich introduced a motion to accept the minutes as written. Jami Erickson seconded the motion. A voice vote of all ayes and no nays was recorded.

Carry Forward 2013 Cases

4. Case 13-15: Revisions to MAG Sections 101, 601, 603, 615 and 618 for Rigid and Flexible Pipe. Updates to Details 200-1 and 200-2.

   Update pipe installation requirements. Warren White described a memo summarizing the work done on the case during the last working group meeting. The first part of the memo listed the default fill material for rigid pipe (Section 601) and flexible pipe (Section 603). MAG ABC would be the default for bedding as well as the haunching zone. No native fill is allowed in the haunching zone for flexible pipe. Final backfill requirements would be determined by the options available on Detail 200-1. Bob Herz requested the compaction requirement of Table 601-2 be made consistent with the compaction requirements in Section 301.3 (A) and (B).

   The working group also discussed jetting and water consolidation options. Mr. White asked for further discussion on this issue. Mr. Herz said the county does not allow jetting in the roadway prism. Brian Gallimore said jetting is used in future subdivisions all the time. Jim Badowich said the working group decided not to ban it, but do want to limit it based on soil characteristics. Warren White said there can be problems with air voids left after the water drains. Peter Kandaris said at SRP they did extensive testing and found that under best conditions you could only get about 90% compaction. He said that jetting can be beneficial around structures where it is difficult to get compaction via mechanical means.

   Mr. Badowich asked for feedback on what limitations are needed in the spec. Tom Vassalo said it should be determined on a case-by-case basis. Mr. Kandaris said SRP had problems with compaction around transformer poles which is why they went to CLSM. A problem with requiring CLSM is the additional cost would likely be opposed by homebuilders. Bob Herz said jetting can work in new subdivisions when both the trenched material and the backfill are well draining granular materials. Trenched utilities should all be installed when the road

subgrades are roughed in, after trench backfill has been tested the roadway subgrade is finished and compacted followed by installation and compaction of base courses before paving. Warren White asked if jetting of backfill should be determined by a geotechnical report. Brian Gallimore thought the jetting specs should remain so that when it was allowed, proper procedures would be followed. Bob Herz suggested extra testing could be required.

5. Case 13-21: Create a new Section 742 Pre Cast Manhole Bases. Add detail drawings for construction and installation. Update existing manhole details.

   Update specifications and details for pre-cast manhole bases and other corrections. Craig Sharp handed out an updated version of Section 742 Precast Manhole Bases during the meeting, and asked for comments. Bob Herz provided a handout that outlined some of Maricopa County's comments. He said that 4" wide 24" diameter adjustment rings don't provide full bearing for 24" manhole frames which have a 26⅜" inside diameter. He said the specs don't require a shear key joint as shown on the detail. Craig Sharp said he could place the old ring detail back on the drawing to help clarify.

   Mr. Herz said that much of the language in 742 describes the construction of the precast manhole sections, and since it is more thorough, he suggested incorporating it into Section 625. Mr. Sharp said he would look into it, and since Case 13-22 updated Section 625 it may work. Mr. Herz asked why the casting types (Section 742.3) were included since construction is specified by ASTM C478 and AASHTO M199. He asked if it mattered how the sections and bases were constructed as long as the met the standards.

6. Case 13-22: Update Sections 625 and 775 to remove references to the use of bricks in manholes and remove references to manhole steps.

   Craig Sharp said he received no comments since the last meeting. Bob Herz asked what happens when repairs to brick manholes are needed if specifications for bricks are removed. Mr. Sharp said that could be determined by special provisions to either make repairs or replace the brick manhole. Mr. Herz also noted a typo in 625.4.1 the word "angel" should be "angle".

New Cases for 2014

7. Case 14-01: Miscellaneous Corrections.

   A. Change "transverse" to "longitudinal" in Section 321.8.2.
   B. No new corrections cases were introduced

8. Case 14-02: Revisions to Section 405 Monuments and Detail 120.

   Update specifications to match current details and requirements. Mr. Herz said notes 2 and 3 were in conflict. Note 2 required use of Type B monument for subdivision corners and Note 3 also required the use of Type C monument for subdivision corners. To resolve the conflict he deleted Type C. Craig Sharp said Buckeye still uses Type C, but not for subdivision corners as

shown in the notes. Mr. Herz said he would put the detail for Type C back on the drawing, but adjust the notes to refer to Type B only for subdivision corners, in order to fix the conflict. He asked the committee to prepare to vote on the case at the next meeting.

9. Case 14-03: Updates to Guardrail Details.

   Make revisions to Section 415 and/or include guardrail details in MAG. Bob Herz said there were no changes since the last meeting since Maricopa County hasn't revised their details yet.

10. Case 14-04: Revision to Detail 552 Concrete Cut-off Walls.

    Move cut-off walls away from roadway edge and delete design related notes. Bob Herz said he requested to vote on the case at the last meeting, and asked if there were any questions. Seeing none he moved to approve Case 14-04 as presented. Craig Sharp seconded the motion. A roll call vote was taken. ***The case was approved: 12 yes, 0 no, 1 abstaining, 4 not present.***

11. Case 14-05: Revisions to Section 324 Portland Cement Concrete Pavement (PCCP).

    Use compressive rather than tensile strength tests, modernize and reorganize section as needed. Jeff Hearne described the latest changes to the case. He said he took out the language in Section 324.2.3 on load transfer bars, since this would be determined by the type of system used. He also revised Section 324.4 Smoothness to remove specific requirements and leave it up to the agency. He said the version dated 4/3/14 in the packet is the most current, and asked members to review the case and prepare to vote on it at the next meeting.

12. Case 14-06: Revisions to Section 718 Preservative Seal for Asphalt Concrete.

    Update the specifications for the Type C preservative seal. Jeff Benedict said he had no update for the meeting, but he did incorporate Chandler's notes and currently has it under review by Sam Haddenson of Western Refining. He plans to have a final version to review at the next Asphalt working group meeting.

13. Case 14-07: Revision to Section 735 Reinforced Concrete Pipe and Section 618 Storm Drain Construction.

    Add Elliptical and Arch Reinforced Concrete Pipe. Bob Herz said he has not received any comments, and asked if there were any. He thought the case was pretty straightforward and proposed a potential vote on the case next month.

14. Case 14-08: New Section 607: Trenchless Installation of Smooth Wall Jacking Pipe.

    Included are revisions to Section 618: Storm Drain Construction. Jim Badowich said there was not much discussion at the working group meeting. Peter Kandaris asked if it is limited to reinforced concrete. Arvid Veidmark said that was the default, but other materials could be substituted by the agency. Mr. Wilhite asked if the case needed to be voted on at the same time as Warren White's case since it modifies Section 618. Mr. Tyus said that if there are no

conflicts it doesn't matter. If a case that is approved later changes the same specs it will supersede the previous changes. Mr. Badowich asked for comments and requested to vote on the case next month.

15. Case 14-09: Revision to Section 726 Concrete Curing Materials.

    Replace discontinued AASHTO references with current ASTM standards. Bob Herz said no comments were received. Since the case only replaces outdated references with current ones, he proposed that it be scheduled for action at the next meeting.

16. Case 14-10: Include Language to Allow Use of Warm Mix Asphalt.

    Update Sections 321 and 710. Jeff Benedict introduced a new case that would allow warm mix to be used. He said Adrian Green, who helped prepare the case, would provide more information. Mr. Green said not a whole lot was changed in order to keep it simple. He said that there were up to 38 different warm mix technologies available, so rather than try to incorporate specifications for so many options, language was added to allow contractors the option to use warm mix, and if they do, to follow the manufacturer's requirements for such things as the application temperature. He said suppliers in the Valley have had the capability to provide warm mix for about five years. Some benefits include faster paving, safety, and less pollution.

    If using warm mix, the contractor would have to follow the technology manufacturer's requirements including additional testing. This was added as Note 11 in Section 710.3.1. The requirements would be part of the mix design ticket.

    Brian Gallimore said usually warm mix is more expensive, but they may choose to use it for certain reasons. Adrian Green said the approved warm mixes are those on ADOT's approved material list since ADOT has already done the testing. Several members questioned whether the choice of warm mix should be left to the contractor and not the engineer. Mr. Wilhite asked if prior approval was required for bids. Mr. Green said it may depend on how it is used. Sometimes the additive is used to keep the asphalt more malleable, rather than to apply it at a lower temperature. Tom Wilhite asked if agencies would have problems with bid protests if contractors chose whether to use warm mix or not. Julie Christoph suggested striking "at the option of the contractor" from 321.2, and others agreed.

    Bob Herz asked what warm mix technologies agencies may accept. Mr. Benedict said right now you would only get what ADOT approves. If it is not on the list, it's not allowed, and the agency has the final say on any mix. Some members questioned referencing ADOT for appoved lists, but currently there are no options at either the East Valley or Phoenix labs. Jeff Benedict said the only major changes are the additives and the temperature it is applied, the asphalt mix still needs to meet all the same requirements.

    Antonio Hernandez asked about the temperatures as it is laid down. Mr. Green said they have placed warm mix at temperatures as low as 190 degrees at his yard, but typically warm mix is referred to as anything applied at 250 degrees or less. Manufacturers are continuing to lower

temperature requirements. Craig Sharp asked if warm mix can increase the tender zone, referencing a project they did using a Superpave system. Mr. Green gave an example of Packard Road in Tempe that was repaved with warm mix. He said the road has a lot of traffic and it works and looks great.

Members also pointed at a few small corrections: a typo in Section 321.6 and changing "will" to "shall" in 321.5.

Jeff Benedict summarized the comments and changes to the case and said they would revise it and review it at the next working group meeting.

17. New and Potential Cases

Jeff Benedict said the Asphalt working group was revising Section 321 to clean up and refine it for use in permit work; however, it may not be ready as a case this year.

Jim Badowich said Jami Erickson and the water/sewer group is preparing a case to consolidate all the testing requirements into a new Section 611. This is needed to go along with the changes proposed in Case 13-15. Mr. Badowich said they also may have a new case for Horizontal Drilling and Boring (Section 607) coming.

Jeff Hearne said he has some minor changes to Section 725 that may become a case.

Brian Gallimore said there is a conflict in the rock collection techniques in Sections 301 and 310 that he plans to address.

18. Working Group Reports

Chair Wilhite asked for reports from the working group chairs.

a. **Water/Sewer Issues Working Group**
Mr. Badowich said the group met on April 22nd and spent a lot of time on the manhole items, cases 13-21 and 22. They also spent a good amount of time reviewing Case 13-15. One of the items discussed at length was technical definitions vs. granular material. They recommend using MAG ABC since it meets the granular fill requirement, but may want to review it further. Warren White said many of Chandler's supplements refer to ABC instead of granular fill. Peter Kandaris remembered an earlier effort to clean up the term "granular material" in the specification.

Jim Badowich said they also looked at the draft Section 611 for testing.

The next meeting is scheduled for May 20th at 1:30 p.m. in the MAG office.

b. **Asphalt/Materials Working Groups**
Jeff Benedict said the group met on April 24th, where they discussed the warm mix case and incorporating MCDOT supplements in Section 321. Mr. Benedict said they discussed decorative asphalt stamping and may bring forward a case based on Gilbert's supplement.

Jeff Benedict said the next asphalt/materials working group meeting is planned for May 22nd at the ARPA office at noon, and lunch will be provided.

c. **Concrete Working Group**
The concrete working group followed the Asphalt/Materials working group meeting on April 24th. Mr. Hearne said they worked on revisions to *Section 725 Portland Cement Concrete*. The work on Section 324 is pretty much finished.

Mr. Hearne said the next Concrete working group meeting would follow the Asphalt/Materials group on May 22nd.

d. **Outside Right-of-Way Working Group**
Peter Kandaris he received only one response to the survey. He asked members to respond to the survey to help give him guidance on what sections to include and begin working on. Jim Badowich asked if blackflow prevention details were listed on the survey. Mr. Kadaris said no, but they could be written in.

19. General Discussion

Chair Wilhite asked for any general discussion items. Warren White asked members about the delivery of GPS data on pipes in the right-of-way. Chandler wants it for more accurate records of underground utilities compared to as-built documents. He thinks a standard for how the GPS data is provided (coordinate system, projections, etc.) would be helpful. Chandler incorporates the data into their CAD drawings. Jami Erickson said Phoenix is receiving GPS data, but it currently is not compatible or used in their CAD systems. Brian Gallimore suggested that putting a line item in the contract specifying the data format would be useful.

Tom Vassalo from Goodyear asked other agencies about their experience receiving mix designs in advance for prior approval rather than throughout the year, because due to staffing Goodyear are having a hard time responding to mix designs in time throughout the year. He said they would prefer to look at them once a year. Julie Christoph said Mesa had a problem getting a lot of samples. Jeff Benedict said suppliers will send every possible mix design if prior approval is required, so they aren't shut out, even if it is never used. He added there were five suppliers and each would send many samples. Peter Kandaris suggested requesting pre-approved mixes for those you expect to use rather than all possible mixes.

20. Adjournment:

Seeing no further business the meeting was adjourned at 3:37 p.m.

2014 PROPOSED REVISIONS TO MAG SPECIFICATIONS AND DETAILS

(Updated information can be found on the website: http://www.azmag.gov/Projects/Project.asp?CMSID=1055&CMSID2=5827)

CASE	DESCRIPTION	PROPOSED BY	MEMBER	SUBMITTAL DATE Last Revision	VOTE DATE	VOTE	
	CARRY FORWARD CASES FROM 2013						
13-15	Case 13-15: Revisions to MAG Sections 101, 601, 603, 615 and 618 for installing rigid and flexible pipe. Update Detail 200-1 and 200-2.	Chandler/ Water-Sewer WG	Warren White	05/01/2013 04/29/2014		0 0 0	Yes No Abstain
13-21	Case 13-21: Create a new Section 742 Pre Cast Manhole Bases. Add detail drawings for construction and installation. Update existing manhole details.	Buckeye/ Water-Sewer WG	Craig Sharp	06/05/2013 05/28/2014		0 0 0	Yes No Abstain
13-22	Case 13-22: Update Sections 625 and 775 to remove references to steps and the use of bricks in manholes.	Buckeye/ Water-Sewer WG	Craig Sharp	06/05/2013 05/28/2014		0 0 0	Yes No Abstain
	NEW CASES FOR 2014						
14-01	Case 14-01: Miscellaneous Corrections: A. Change “transverse” to “longitudinal” in Section 321.8.2. B. In section 739.1 delete the extra occurrence of the word ‘Pipe’.	Scottsdale	Rod Ramos Bob Herz	01/08/2014 05/20/2015		0 0 0	Yes No Abstain
14-02	Case 14-02: Revision to Section 405 Monuments. Update specification to match current details and requirements.	MCDOT	Bob Herz	01/08/2014 05/08/2014	06/04/2014	0 0 0	Yes No Abstain
14-03	Case 14-03: Updates to Guardrail Details. Revisions to Section 415 and/or inclusion of MCDOT guardrail details.	MCDOT	Bob Herz	01/08/2014		0 0 0	Yes No Abstain
14-04	Case 14-04: Revision to Detail 552 Concrete Cut-off Walls. Move cut-off walls away from roadway edge and delete design related notes.	MCDOT	Bob Herz	01/08/2014 02/20/2014	05/07/2014	12 0 1	Yes No Abstain
14-05	Case 14-05: Revisions to Section 324 Portland Cement Concrete Pavement.	Concrete WG	Jeff Hearne	02/05/2014 04/03/2014	06/04/2014	0 0 0	Yes No Abstain
14-06	Case 14-06: Revisions to Section 718 Preservative Seal for Asphalt Concrete.	Asphalt WG	Jeff Benedict	02/05/2014		0 0 0	Yes No Abstain

2014 PROPOSED REVISIONS TO MAG SPECIFICATIONS AND DETAILS

(Updated information can be found on the website: http://www.azmag.gov/Projects/Project.asp?CMSID=1055&CMSID2=5827)

CASE	DESCRIPTION	PROPOSED BY	MEMBER	SUBMITTAL DATE Last Revision	VOTE DATE	VOTE	
14-07	Case 14-07: Revision to Section 735 Reinforced Concrete Pipe and Section 618 Storm Drain Construction. Add Elliptical and Arch Reinforced Concrete Pipe.	MCDOT	Bob Herz	04/02/2014	06/04/2014	0 0 0	Yes No Abstain
14-08	Case 14-08: New Section 607: Trenchless Installation of Smooth Wall Jacking Pipe. Includes Revisions to Section 618: Storm Drain Construction.	Water/Sewer WG	Jim Badowich	04/02/2014 05/27/2014	06/04/2014	0 0 0	Yes No Abstain
14-09	Case 14-09: Revision to Section 726 Concrete Curing Materials. Replace discontinued AASHTO references with current ASTM standards.	MCDOT	Bob Herz	04/02/2014	06/04/2014	0 0 0	Yes No Abstain
14-10	Case 14-10: Include Language to Allow Use of Warm Mix Asphalt. Update Sections 321 and 710.	Asphalt WG	Jeff Benedict	05/07/2014 05/22/2014		0 0 0	Yes No Abstain
14-11	Case 14-11: Delete the use of Asbestos-Cement Pipe in Valve Box Installations.	MCDOT	Bob Herz	06/04/2014		0 0 0	Yes No Abstain
14-12						0 0 0	Yes No Abstain
14-13						0 0 0	Yes No Abstain
14-14						0 0 0	Yes No Abstain

CITY OF BUCKEYE

Engineering Department

Case Number: 13-21

Date: 07-25-13

To: MAG Specifications and Details Committee

From: Craig Sharp

RE: Section 742 Precast Manhole Bases

Purpose: Creating a new section and details for precast manhole bases and modifying the existing cast in place manhole detail No. 420-1, 420-2, 421 and 422.

Revisions:

Creating a new section and details for precast manhole bases and modifying existing details.

Updated 05-27-14

SECTION 742

PRECAST MANHOLE

742.1 GENERAL:

This specification covers the requirements of precast manholes for gravity sanitary sewer. When noted on the plans or in the special provisions precast manhole shall be constructed according to this specification. All precast manhole manufacturers shall be NPCA (National Precast Association) certified and shall provide all NPCA certifications upon request. Loading criteria for the precast manholes shall meet or exceed the AASHTO H20 loading requirements. All precast manhole risers shall be monolithically cast to ensure water tightness and have a certified structural design and the manhole shall be cast in a fashion to achieve water tightness. This shall include a monolithic cast manhole or a multi section cast manhole which also shall have a certified structural design.

742.2 MATERIALS:

742.2.1 Cementitious Materials: Cementitious materials shall conform to Section 725.2 and shall have a minimum compressive strength after 28 days of 4000 PSI.

742.2.2 Precast Sections: Precast sections shall conform to ASTM C478, AASHTO M199

742.2.3 Joints and Connections: Joints and connections shall conform to ASTM C425, C990 and C923.

742.4 MANHOLE PENETRATIONS:

Cut out of the precast base shall be done using a mechanical hole saw. The location of the hole shall be determined by the plans and specifications. After the core is removed from the casting the manufacturer shall coat all reinforcing with a corrosion inhibiting epoxy suitable for end use application. The thickness of the epoxy shall be per the manufacturer recommendation suitable for the end use application. Knock outs shall be formed in the location noted on the plans or specifications.

742.5 REINFORCING

Reinforcing for the base shall meet the following specifications:

- Wire ASTM A82 or A496
- Wire fabric A185 or A497

Design of the reinforcing shall be in accordance with ACI 318 and ASTM C890

742.6 GASKETS

A flexible pipe to manhole connector shall be used whenever a pipe penetrates into a precast concrete manhole or structure. The design of the connector shall provide a flexible, watertight seal between the pipe and the concrete. The connector shall assure that a seal is made between the structure wall and the pipe by:

- Casting the connector integrally with the structure wall during the manufacturing process in a manor that will not pull out during pipe coupling.
- compressing the connector against the inside circumference of the structure by means of wedge or toggle style connection, expansion ring or other means approved by the engineer.

The connector shall be made of from materials that conform to the physical and chemical requirements outlined in the ASTM C923, and C425.

The connector shall be sized specifically for the type of pipe being used and shall be installed in accordance with the recommendations of the manufacturer.
The connection hardware shall be constructed of a 316 stainless steel meeting ASTM A480. The hardware shall ensure a water tight connection between the concrete and the pipe material and shall provide an adequate seal enough to withstand the

negative air pressure test per ASTM C-1244.

742.7 LIFTING POINTS

Lifting points shall be designed and evaluated by a registered professional engineer and have a minimum safety factor of 4. There shall be a minimum of 2 lifting points on every precast manhole base. After base installation, the lifting holes shall be thoroughly packed with a pre-packaged non-shrink grout. Bent reinforcing steel bars shall not be used as lifting devices. Through lifting holes will not be allowed.

742.8 IMPERFECTIONS

742.8.1 Imperfections: Any imperfections which in the opinion of the engineer may adversely affect the performance of the precast base shall be cause for rejection.

-End of Section –

TYPE 'A' TOP

(PRECAST ECCENTRIC CONICAL TOP MANHOLE)

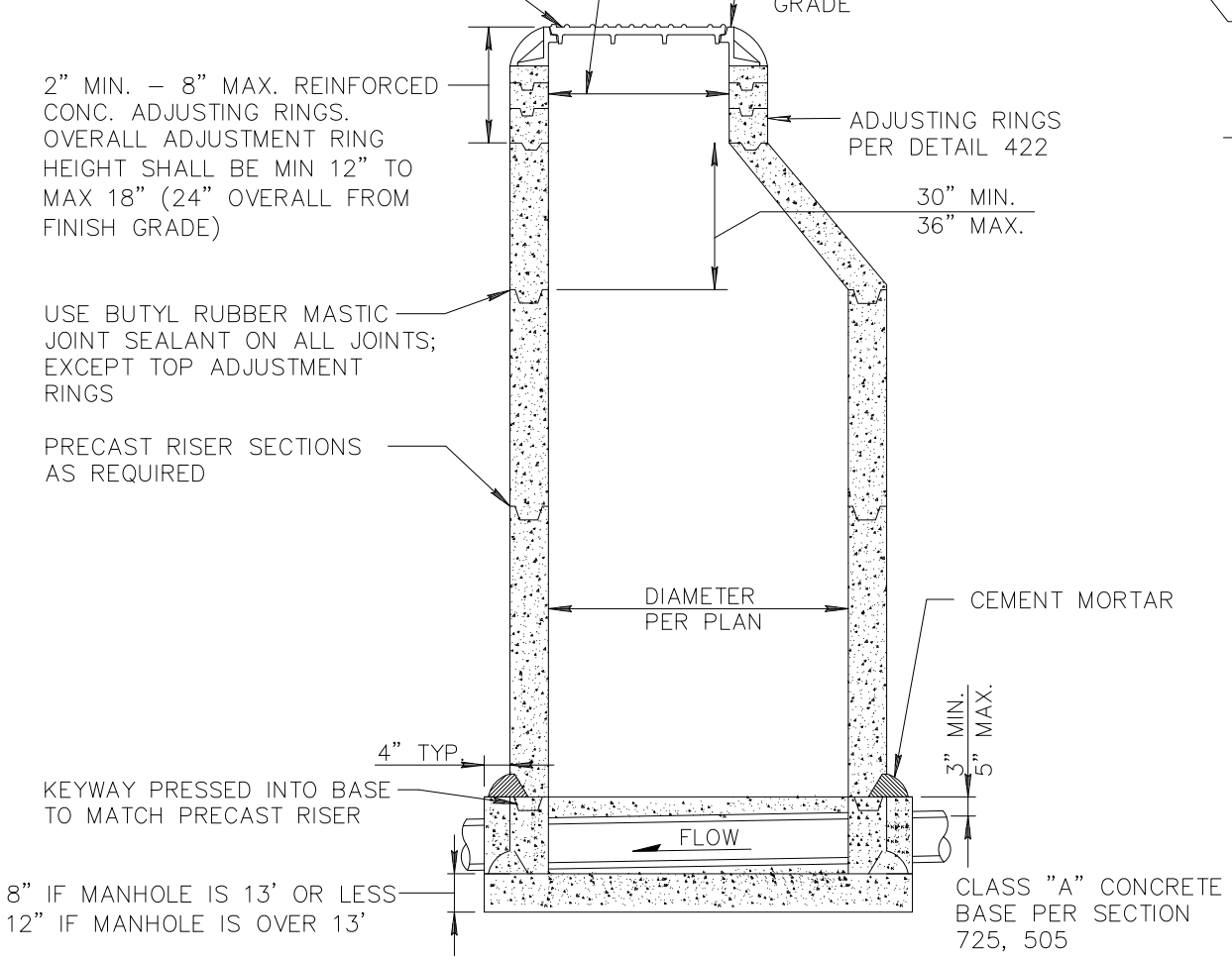

(PRECAST FLAT TOP M.H.)

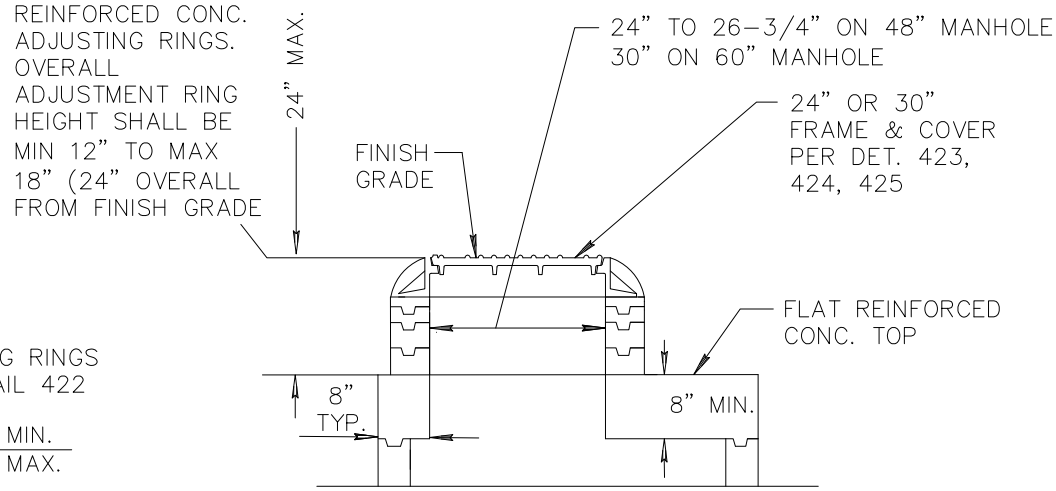

NOTES:

1. PRECAST STEEL REINFORCED MANHOLE SECTIONS SHALL BE MANUFACTURED IN ACCORDANCE WITH ASTM C 478 EXCEPT AS MODIFIED HEREIN.
2. CAST-IN-PLACE MANHOLE BASE TO BE CONSTRUCTED IN ONE PLACEMENT.
3. CAST-IN-PLACE MANHOLE BASE SHELF AND CHANNEL TO RECEIVE SMOOTH TROWEL FINISH.
4. MANHOLE COATINGS PER AGENCY.
5. SEE MAG DETAIL 422 FOR FINAL ADJUSTMENT TO GRADE.
6. ANY MANHOLE OVER 20' SHALL REQUIRE ENGINEER (STRUCTURAL) CALCS.
7. THE MANHOLE ACCESS POINT SHALL BE ORIENTED IN SUCH A WAY THAT THE OPENING IS DIRECTLY ABOVE THE LOWEST INVERT.
8. FOR PRECAST BASE SEE DETAIL 420-2.
9. FLAT TOPS SHALL ONLY BE USED WITH APPROVAL FROM THE ENGINEER.

DETAIL NO.		STANDARD DETAIL		REVISED	DETAIL NO.
420-1	MARICOPA ASSOCIATION of GOVERNMENTS	ENGLISH	CONCRETE SANITARY SEWER MANHOLE	01-01-2015	420-1

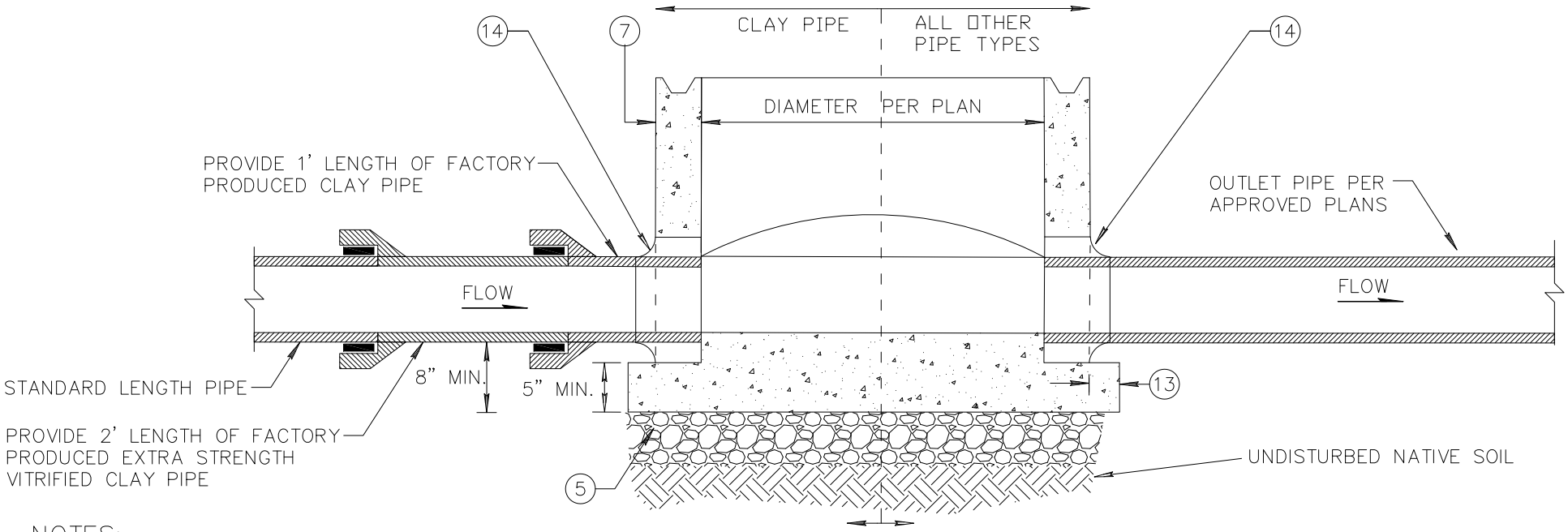

NOTES:

1. PRECAST, MANUFACTURER SHALL BE AN NATIONAL PRECAST CONCRETE ASSOCIATION (NPCA) CERTIFIED PLANT. ENTIRE PRECAST BASE SHALL BE MANUFACTURED AT THE PLANT PER ASTM C478.
2. MAG "AA" 4000 PSI CONCRETE SHALL BE USED FOR PRECAST MANHOLE BASES.
3. SPRING LINE OF CAST-IN-PLACE BELL SHALL STOP AT INSIDE FACE OF MANHOLE.
4. JOINTS FOR BARREL SECTION SHALL BE TONGUE AND GROOVE TYPE. ALL LIFTING HOLES SHALL BE SEALED WITH GROUT.
5. ALL PRECAST MANHOLE BASES SHALL BE PLACED ON 10" MINIMUM #57 ROCK PER ASTM D448 WITH AT LEAST 50% ONE FRACTURED FACE WHEN TESTED IN ACCORDANCE WITH ARIZ 212 OR 8" ABC PER SECTION 702 COMPACTED TO 100% RELATIVE DENSITY.
6. ALL MODIFICATIONS SHALL BE APPROVED BY THE ENGINEER.
7. MINIMUM WALL THICKNESS SHALL BE PER ASTM C478 (MIN 5").
8. REINFORCEMENT SHALL BE DESIGNED BY AN ARIZONA REGISTERED PROFESSIONAL ENGINEER.
9. CHANNEL TRANSITION SHALL BE CONSTANT FROM INLET TO OUTLET OF MANHOLE.
10. THERE SHALL BE NO HARD CONNECTIONS (GROUTED) INTO THE MANHOLE BASE UNLESS APPROVED BY THE ENGINEER.
11. ALL SEWER SERVICE CONNECTIONS SHALL HAVE THE SAME CONNECTION TYPES IN THE PRECAST MANHOLE BASE.
12. ALL CORE HOLES INTO THIS STRUCTURAL PRECAST BASE SHALL BE COATED WITH AN APPROVED COATING MATERIAL.
13. THE MANHOLE BOTTOM SHALL EXTENDED OUTSIDE THE MANHOLE WALL A MINIMUM 6" WIDE ON 48" BASES, 7" WIDE ON 60" BASES, AND 8" WIDE ON 72" BASES. EXTENDED BOTTOM SHALL BE A MINIMUM OF 5" THICK.
14. ALL PIPE CONNECTIONS SHALL BE ELASTOMERIC GASKET/BOOT PER ASTM C425 AND ASTM F477. ADDITIONALLY, A POLYURETHANE JOINT MAY BE USED ON EXTRA STRENGTH VITRIFIED CLAY PIPE.

DETAIL NO.				REVISED	DETAIL NO.
420-2	MARICOPA ASSOCIATION of GOVERNMENTS	STANDARD DETAIL ENGLISH	PRECAST CONCRETE MANHOLE BASE	01-01-2015	420-2

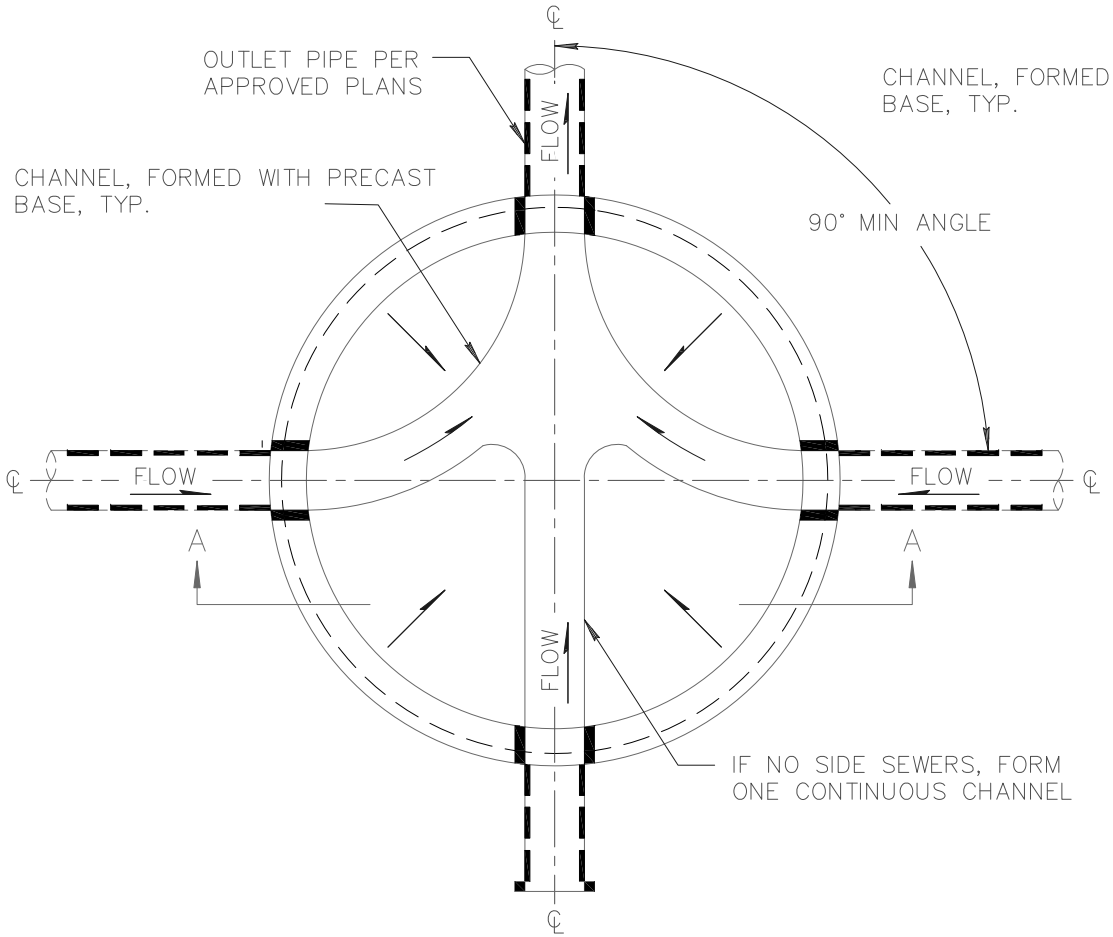

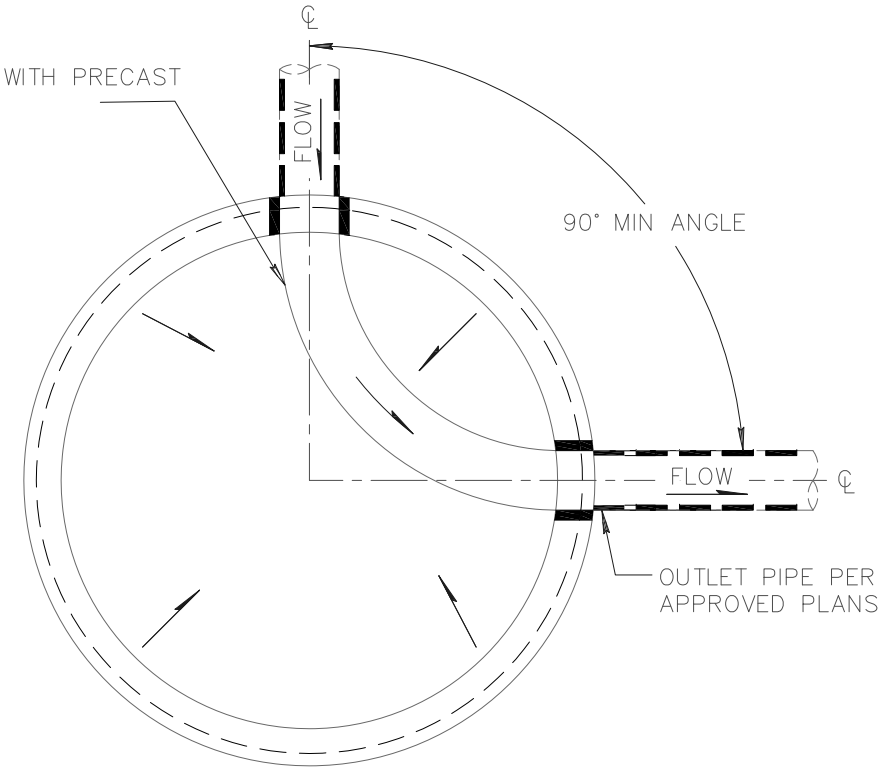

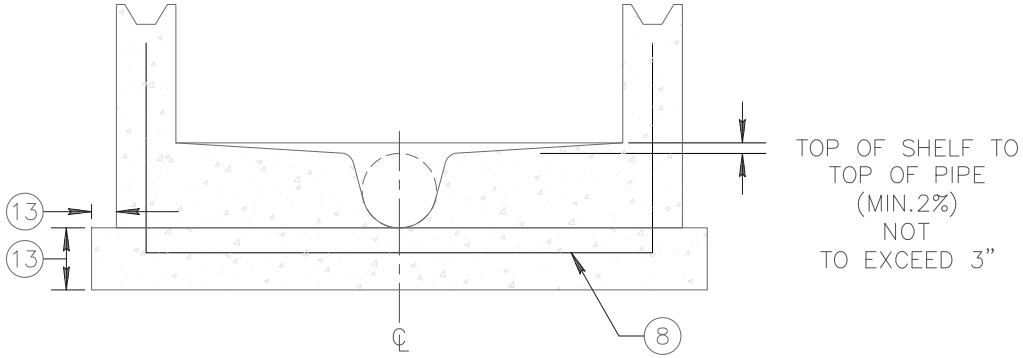

SECTION A–A

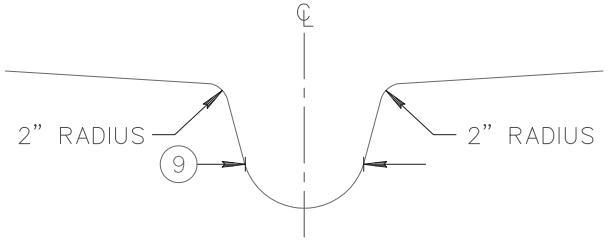

CHANNEL TRANSITION SHALL
BE CONSISTENT FROM INLET
TO OUTLET OF MANHOLE.

TYPICAL CHANNEL

SEE DETAIL 420–2 FOR NOTES

DETAIL NO.				REVISED	DETAIL NO.
420-3	MARICOPA ASSOCIATION of GOVERNMENTS	STANDARD DETAIL ENGLISH	PRECAST CONCRETE MANHOLE BASE	01-01-2015	420-3

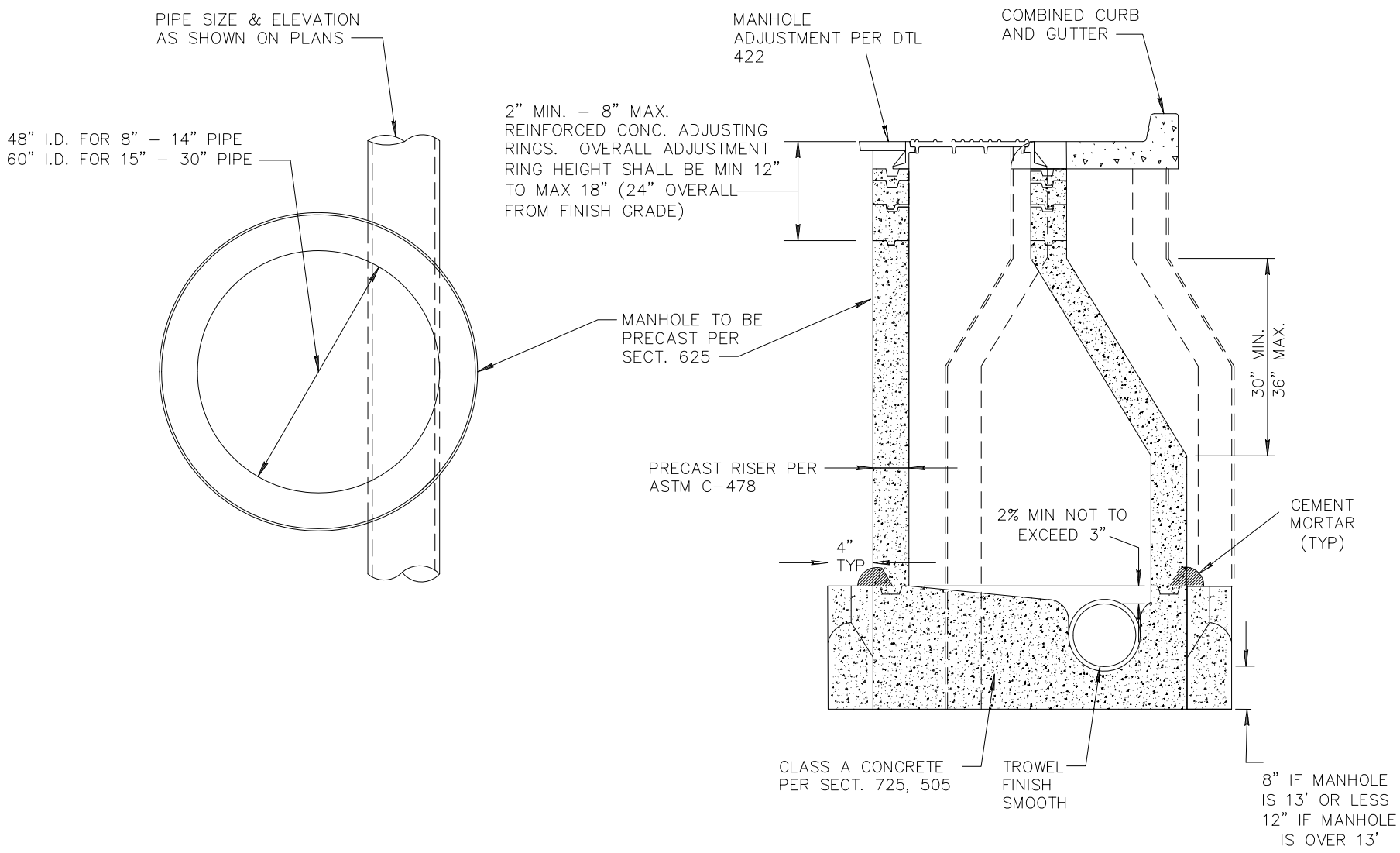

DETAIL NO.				REVISED	DETAIL NO.
421	MARICOPA ASSOCIATION of GOVERNMENTS	STANDARD DETAIL ENGLISH	OFFSET MANHOLE 8" TO 30" PIPE	01-01-2015	421

NOTES:

1. CONTRACTORS SHALL ADJUST ALL MANHOLE RINGS AND COVERS, INCLUDING MANHOLES OUTSIDE OF THE PAVEMENT.
2. ADJUSTMENT SHALL BE CONSTRUCTED PER MAG SECTION 345.
3. MANHOLE COATINGS PER AGENCY.

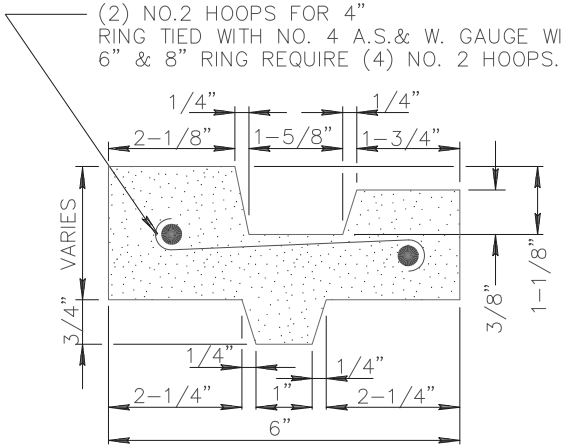

ADJUSTING RING DETAIL

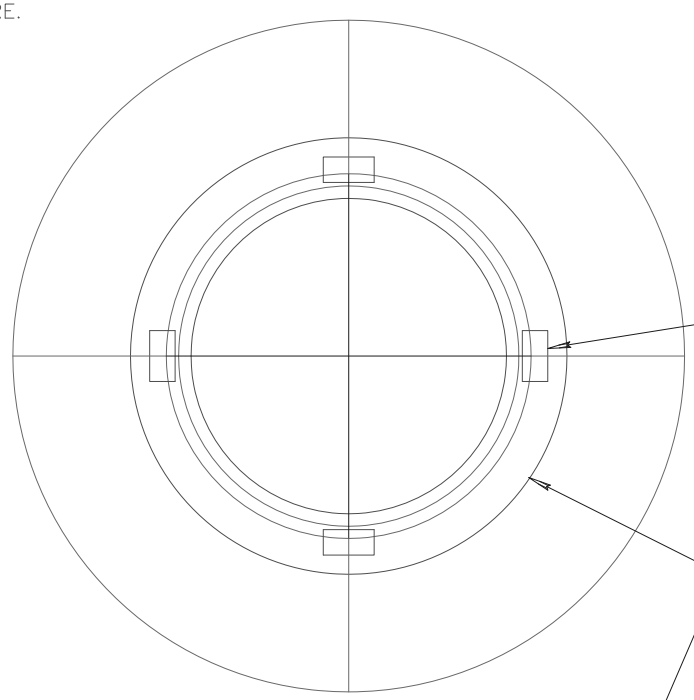

ADJUSTMENT SUPPORTS PER SECTION 345

MEDIUM BROOM FINISH WITH RADIALLY SCORED MARKS (4 MIN.)

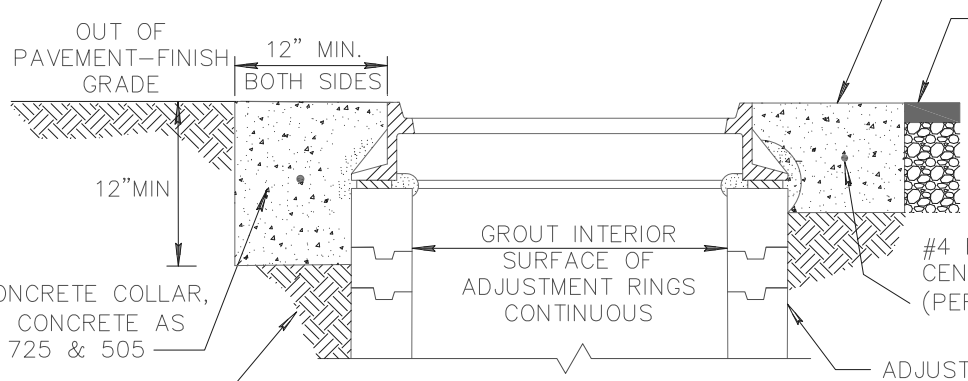

EXISTING OR RECENTLY INSTALLED PAVEMENT

8"MIN

#4 REINFORCING STEEL EQUALLY CENTERED HORIZONTALLY & VERTICALLY (PER JURISDICTION)

POURED CONCRETE COLLAR, CLASS 'AA' CONCRETE AS PER SECT. 725 & 505

ADJUSTING RINGS

SUBGRADE PREPARATION TO CONFORM TO SECT. 301 OR 601

DETAIL NO.				REVISED	DETAIL NO.
422	MARICOPA ASSOCIATION of GOVERNMENTS	STANDARD DETAIL ENGLISH	MANHOLE FRAME AND COVER ADJUSTMENT	01-01-2015	422

CITY OF BUCKEYE

Engineering Department

Case Number: 13-22

Date : 06-05-13

Revised: 05-28-14

To: MAG Specifications and Details Committee

From: Craig Sharp

RE: Section 625 - Manhole construction and drop sewer connections

Section 775 – Bricks and masonry units

Purpose: Deleting references to bricks and steps in manholes

Revisions:

This revision is to delete references for the use of bricks and steps in sanitary sewer manholes.

SECTION 625

MANHOLE CONSTRUCTION AND DROP SEWER CONNECTIONS

625.1 DESCRIPTION:

625.1.1 Sewer Manholes: Construction shall consist of furnishing all materials and constructing manholes complete in place, as detailed, including foundation walls, ~~cast iron steps,~~ manhole frames, covers, and any incidentals thereto, at locations shown on the plans.

625.1.2 Drop Sewer Connections: Construction shall consist of furnishing all materials and constructing drop sewer connections complete in place as detailed, including foundation materials, pipe, and any incidentals thereto, at locations shown on the plans.

625.2 MATERIALS:

Unless otherwise shown on the plans or specified in the special provisions, materials to be used shall conform with the following:

Bricks for manholes ~~Section 775~~shall not be used.

Cement mortar for manholes Class D, Section 776.

Concrete for manholes Class A, for drop sewer connection Class C, Section 725.

Pipe used in manholes or drop sewer connections shall comply with pipe requirements of Section 615.

Manhole frame, cover ~~and steps~~ Section 787 and cast in accordance with standard details.

~~Plastic manhole steps, which conform to O.S.H.A. and A.S.T.M. C 487 requirements, and steel manhole steps, which are completely encapsulated in corrosion resistant rubber and conform to O.S.H.A. and A.S.T.M. C 478 requirements, may be substituted for cast iron manhole steps. The manufacturer shall furnish the Engineer a certification indicating conformance.~~
Manhole steps shall not be used.

625.3 CONSTRUCTION METHODS:

625.3.1 Manholes: Manholes shall be constructed ~~of brick,~~ of precast concrete sections, ~~or of~~ cast in place concrete, ~~with cast iron manhole steps~~, and frames and covers, in accordance with the standard details. The invert channels shall be smooth and semi-circular in shape, conforming to the inside of the adjacent sewer sections. Changes in direction of flow shall be made with a smooth curve, having a consistent radius as large as the manhole will permit with no angle points. Changes in size and grade of the channels shall be made gradually, ~~and~~ evenly, and uniformly throughout the manhole base.

Invert channels ~~may~~ shall be formed of concrete and ~~or brick masonry~~ have~~ing~~ a smooth mortared surface, may be half tile laid in concrete ~~or brick,~~ or may be constructed by laying full section of sewer pipe through the manhole and breaking out the top half after the surrounding concrete ~~or brick masonry~~ has hardened. The ~~floor~~ bench of the manhole outside the channels shall be smoothed and shall slope towards the channels.

The excavation shall be in such a manor, access is maintained around the manhole base before, during, and after placement of the manhole. ~~made cylindrical to a diameter sufficient in size to permit sheeting if necessary and leave room that the bricks may be laid in a workmanlike manner and the outside mortar coat properly applied or the precast concrete sections or forms may be properly assembled.~~

A concrete foundation of Class A concrete shall be poured in accordance with the Standard Details and Section 505.

~~Brickwork shall not be laid upon a concrete foundation less than 24 hours after such foundation has been poured. No brickwork shall be laid in water, nor, except as prescribed for curing, shall water be allowed to stand or run on any brickwork until the mortar has thoroughly set. Where new work is joined to existing unfinished work, the contact surfaces of the latter shall be thoroughly cleaned and moistened.~~

~~Bricks shall be thoroughly moistened prior to placing, and shall be laid in full cement mortar beds. Every course may be a header course, but at least every fourth course shall be a header course. The horizontal cross section of the manhole shall be circular unless otherwise called for on the plans or standard details. An oval or egg shaped section will not be permitted. A double row lock course of brick in the manhole wall shall be arched over the top half of the circumference of all inlet and outlet pipes. The brick manholes shall be mortared outside with ½ inch of cement mortar as shown on the standard details. Inside of brick wall shall be neatly pointed. The mortar coat shall be cured with a liquid membrane forming compound conforming with Section 726 immediately after mortar has been placed and finished.~~

Frame and Cover. All machined surfaces on the frame and cover shall be such that the cover will lie flat in any position in the frame and have a uniform bearing through its entire circumference. Any frame and cover which creates any noise when passed over by automobiles shall be replaced. Frames shall be set firmly in a bed of mortar true to line and grade, all as shown on the plans and as called for in these specifications.

Backfilling shall be done in accordance with the requirements for trench backfilling as stated in Section 601.

625.3.2 Drop Sewer Connections: Drop sewer connections shall be constructed in conformance with standard details, as the case may be.

Backfilling shall be done in accordance with the requirements for trench backfilling as stated in Section 601.

625.4 MEASUREMENT:

Measurement will be per manhole installed, complete in place, regardless of depth.

625.5 PAYMENT:

Payment will be made at the contract unit price ~~bid~~ for each accepted manhole, and shall be compensation in full for furnishing and installing manhole, complete, with formed or pre-cast inverts, concrete foundation, sanitary sewer drop connections ~~ladder rungs,~~ sheeting and bracing, removal of obstructions cast iron frame and cover, excavation and backfill, paving cut replacement in excess of the applicable pay widths authorized in Section 336, and any incidentals thereto, in conformance with the plans and specifications.

~~Payment will be made at the unit price bid each, and shall be compensation in full for furnishing and installing vitrified clay pipe sanitary sewer drop connections, concrete encasement, excavation, backfilling, water settling, compaction, sheeting and bracing, removal of obstructions, paving cut replacement, in excess of the applicable pay widths authorized in Section 336, testing, and all work incidental thereto in conformance with the plans and specifications.~~

- End of Section -

SECTION 775

BRICK AND CONCRETE MASONRY UNITS (BLOCKS)

775.1 BRICK:

Brick shall be whole, sound, and hard burned and shall give a clear ringing sound when struck together. They shall be uniform in quality and shall be culled or sorted before delivery to the work.

775.1.1 ~~Manhole~~ Brick: ~~Sewer and water manhole b~~Brick shall conform, except for dimensional tolerances, to the requirements of ASTM C32, Grade MM.

~~Manhole b~~Brick shall conform to Table 775-1.

TABLE 775-1			
~~MANHOLE~~ BRICK DIMENSIONS			
Brick	**Inches Depth**	**Inches Width**	**Inches Length**
Standard Size Allowable Variations	2 1/4 ±1/8	3 1/2 ±1/8	7 1/2 ±1/4

The following paragraphs shall be added to the section on visual inspection:

No individual brick shall be rejected unless it shows visual evidence of major cracking. A major crack is defined as one that has at least one complete separation, for a distance of 1 3/4 inches, through the brick in any direction, including any cored area. Such a crack shall be regarded as affecting the serviceability of the brick and shall be rejected and not used in the structure.

Fifty bricks may be sampled at random intervals from any cube for visual inspection. Of the 50 samples, 45 must pass visual inspection for major cracks. Should less than 45 pass, the cube of brick shall be rejected and the brick must not be used in the structure.

775.1.2 Building Brick: Building brick shall conform to the requirements of ASTM C62, grade MW.

775.1.3 Facing Brick: Facing brick shall conform to the requirements of ASTM C216, Grade MW, Type FBS. The size, color, and texture shall be as specified on the plans or as approved by the Engineer.

775.2 CONCRETE MASONRY UNITS:

Unless otherwise noted on the plans or special provisions, concrete masonry units shall conform to ASTM C90, Normal Weight, Type I with a minimum compressive strength of 1900 psi.

The units shall be fully cured and shall have been made not less than 28 days prior to delivery.

The moisture content at the time of delivery shall not exceed 30 percent of the minimum absorption value of the units. The Contractor shall provide any protection he deems necessary to maintain the units in this condition until time of use.

The linear change from saturated to cool oven dry shall not exceed 0.0054 inches per linear foot or 0.045 of 1 percent conducted in accordance with test method in ASTM C426.

The units shall be made with normal weight aggregate conforming to ASTM C33.

The nominal size of the units shall be as indicated on the plans. The overall dimensions for width, height and length shall differ by not more than ±1/8 inch from the specified standard dimensions. Standard dimensions of units are the manufacturer's designated dimensions. Nominal dimensions of units are equal to the standard dimensions plus the thickness of one mortar joint.

No less than 5 samples of the units shall be submitted to the Engineer for approval and to show the full variance of texture and full range of color. Units used in the work shall match the approved samples. These samples may be tested for strength.

All units shall be sound and free of cracks or other defects that would interfere with the proper placing of the unit or would significantly impair the strength or permanence of the construction. When units are to be used in an exposed setting, the face or faces that are to be exposed shall not show chips or cracks, not otherwise permitted, or other imperfections when viewed from a distance of not less than 6 feet under diffused lighting.

Units that are intended to serve as a base for plaster or stucco shall have a sufficiently rough surface to afford a good bond.

End of Section -

MARICOPA COUNTY
Department of Transportation

MEMORANDUM

Date: May 20, 2014

To: MAG Specifications and Details Committee

From: Robert Herz, MCDOT Representative

Subject: Miscellaneous Corrections **Case 14-01B**

PURPOSE: Eliminate extraneous word.

REVISION:

In section 739.1 delete the extra occurrence of the word 'Pipe'.

SECTION 739

STEEL REINFORCED POLYETHYLENE PIPE AND FITTINGS FOR STORM DRAIN, IRRIGATION AND SANITARY SEWER

739.1 GENERAL:

This specification covers the requirements of Steel Reinforced Polyethylene ~~Pipe~~ (SRPE) pipe manufactured per ASTM F2562 for storm drains, irrigation and sanitary sewer systems. When noted on the plans or in the special provisions, storm drains, irrigation and sanitary sewers may be constructed using SRPE pipe. SRPE pipe shall be designed in accordance with AASHTO LRFD Bridge Design Specifications, Section 12. Trench excavation, backfilling and compaction for this flexible pipe shall be in accordance with Section 603. Construction and installation shall be in accordance with Section 618 for storm drain and irrigation water or Section 615 for sanitary sewers.

2901 West Durango Street Phoenix, Arizona 85009 Phone: 602-506-4760 Fax: 602-506-5969

MARICOPA COUNTY
Department of Transportation

MEMORANDUM

Date: January 8, 2014

To: MAG Specifications and Details Committee

From: Robert Herz, MCDOT Representative

Subject: Revision to Section 405 MONUMENTS and Detail 120 **Case 14-02**
Revised 2014-05-08

PURPOSE: Updated specification to match current details and requirements.
Deleted the usage note for Type C Monument (prior note #3).
Modified Type B Monument to have the depth recessed six inches below finished grade when located in an unpaved roadway or alley.

REVISION: See the attached redlined strike-out version of the specification followed by the proposed modified specification in final form and the proposed revised Detail 120.

2901 West Durango Street Phoenix, Arizona 85009 Phone: 602-506-4760 Fax: 602-506-5969

SECTION 405

SURVEY MONUMENTS

405.1 DESCRIPTION:

This work shall consist of furnishing and installing ~~Portland cement concrete right-of-way monuments and~~ survey monuments at the locations shown on the plans or directed by the Engineer~~ and as specified~~. The work also includes the preparation and recording of a corner record or results of survey in accordance with the Arizona State Board of Technical Registration requirements.

Monuments shall conform to the standard details or details shown on the plan.

405.2 MATERIALS:

The concrete portion of monuments shall be constructed in accordance with the provisions in Sections 725 and 505.

Concrete shall be Class B.

Brass caps for survey monuments ~~will~~ shall be furnished by the Contractor unless otherwise specified~~ in the special provisions~~.

405.3 CONSTRUCTION:

~~In constructing precast monuments, the forms shall not be removed until after the concrete has hardened. Monuments that are warped will be rejected. The exposed surface of the finished monuments shall be uniform, of even texture, and shall be free from holes, cracks and chipped edges. The precast monuments shall not be transported to the work site until the concrete has cured.~~

~~Cast in place m~~Monuments ~~shall~~ may be cast in drilled holes without the use of forms.

Survey monuments shall be set vertically in the ground.

The brass cap~~s~~ assembly shall be firmly embedded in the concrete cylinder ~~placed in survey monuments~~ before the concrete ~~block~~ has acquired its initial set~~ and shall be firmly bedded in the concrete~~. The concrete ~~block~~ cylinder shall be so located that, the reference point will fall within a 1 inch circle in the center of the brass cap.

~~**405.4 INSTALLATION:**~~

~~Right-of-way monuments shall be set firmly and vertically in the ground to a depth of at least 3 feet.~~

The tops of survey monument covers shall be set flush with the pavement surface.

~~Survey monuments shall be set in position after the first course of asphalt concrete.~~

405.4 MEASUREMENT:

Survey monuments will be measured by the number of units of each type of monument constructed and accepted.

405.5 PAYMENT:

Payment for monuments will be at the contract unit price~~made on the basis of the prices bid~~ and shall include full compensation for furnishing all labor, materials, tools, equipment and incidentals, and for doing all the work involved in constructing the monuments, complete in place, ~~including asphalt seal and necessary excavation and backfill,~~ as shown on the plans or as directed by the Engineer including preparing and recording a corner record or results of survey.

– End of Section –

PROPOSED SPECIFICATION IN FINAL FORM:

SECTION 405

SURVEY MONUMENTS

405.1 DESCRIPTION:

This work shall consist of furnishing and installing survey monuments at the locations shown on the plans or directed by the Engineer. The work also includes the preparation and recording of a corner record or results of survey in accordance with the Arizona State Board of Technical Registration requirements.

Monuments shall conform to the standard details or details shown on the plan.

405.2 MATERIALS:

The concrete portion of monuments shall be constructed in accordance with the provisions in Sections 725 and 505. Concrete shall be Class B.

Brass caps for survey monuments shall be furnished by the Contractor unless otherwise specified.

405.3 CONSTRUCTION:

Monuments may be cast in drilled holes without the use of forms.

Survey monuments shall be set vertically in the ground.

The brass cap assembly shall be firmly embedded in the concrete cylinder before the concrete has acquired its initial set. The concrete cylinder shall be so located that, the reference point will fall within a 1 inch circle in the center of the brass cap.

The tops of survey monument covers shall be set flush with the pavement surface.

405.4 MEASUREMENT:

Survey monuments will be measured by the number of units of each type of monument constructed and accepted.

405.5 PAYMENT:

Payment for monuments will be at the contract unit price and shall include full compensation for furnishing all labor, materials, tools, equipment and incidentals, and for doing all the work involved in constructing the monuments, complete in place, as shown on the plans or as directed by the Engineer including preparing and recording a corner record or results of survey.

– End of Section –

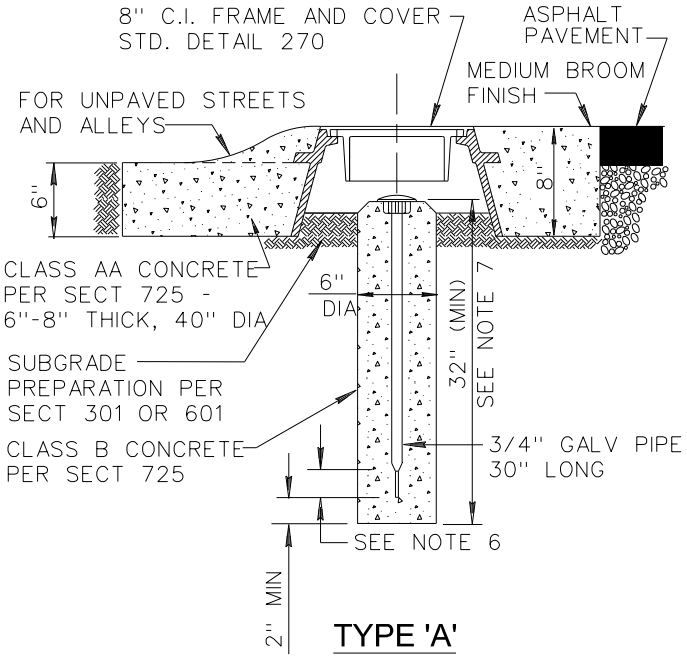

TYPE 'A'

(WITH FRAME)

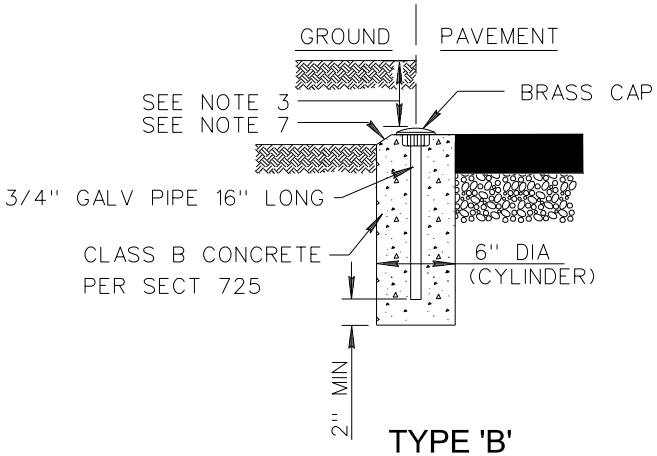

TYPE 'B'

(WITHOUT FRAME)

NOTES:

1. TYPE 'A' TO BE USED AT INTERSECTIONS OF MAJOR STREETS & COLLECTOR STREETS, SECTION CORNERS, SECTION 1/4 CORNERS, CENTER OF SECTIONS, AND AT OTHER POINTS AS SHOWN ON PLANS.
2. TYPE 'B' TO BE USED (EXCEPT WHERE TYPE 'A' IS SPECIFIED) AT INTERSECTION OF STREET CENTERLINES, PC'S, PT'S AND PI'S OF CURVES, SECTION 1/16 CORNERS, SUBDIVISION CORNERS, CHANGE IN ALIGNMENT OF SUBDIVISION BOUNDARIES, AND AT OTHER POINTS AS SHOWN ON PLANS.
3. FOR UNPAVED STREETS AND ALLEYS SET TOP OF MARKER SIX INCHES BELOW FINISHED GRADE.
4. CAP TO BE CONSTRUCTED OF RED BRASS OR BRONZE.
5. LETTERS TO BE APPROX. 1/32" WIDE & 1/32" DEEP.
6. FLATTENING THE BOTTOM 2" OF THE GALVANIZED PIPE IS OPTIONAL.
7. TOP OF CONCRETE POST IS CHAMFERED 3/4" EXCEPT WHEN SET FLUSH WITH PAVEMENT.
8. THE CAP SHALL SHOW THE POINT SURVEYED BY A PUNCH MARK OR SCRIBED CROSS AND THE CAP SHALL BE STAMPED WITH THE YEAR AND THE REGISTERED LAND SURVEYOR'S (RLS) REGISTRATION NUMBER.
9. WHEN APPLICABLE, THE CAP SHALL BE STAMPED WITH THE APPROPRIATE PUBLIC LAND MARKING PER CURRENT MANUAL OF INSTRUCTIONS FOR THE SURVEY OF PUBLIC LANDS OF THE UNITED STATES, PREPARED BY THE BUREAU OF LAND MANAGEMENT.
10. SUBMIT TO THE ENGINEER A COPY OF THE RECORDED CORNER RECORD OR RESULTS OF SURVEY TO DOCUMENT COMPLIANCE WITH THE ARIZONA BOARD OF TECHNICAL REGISTRATION REQUIREMENTS.

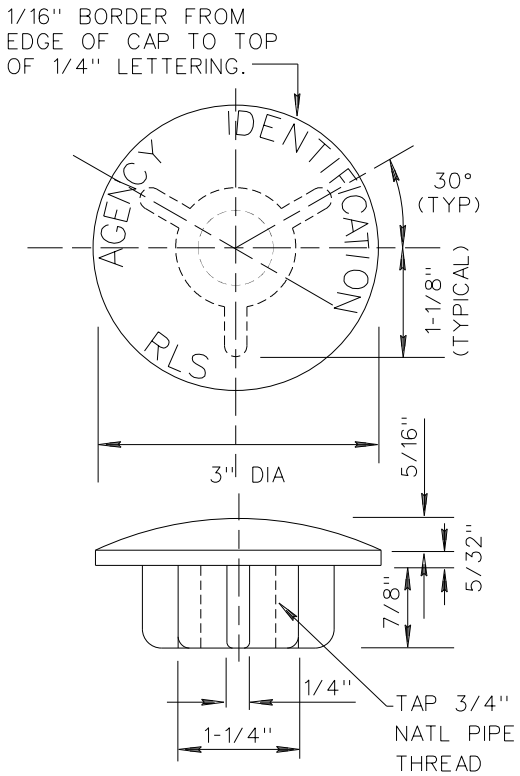

CAP DETAIL

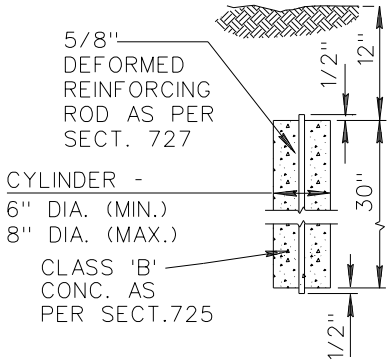

TYPE 'C'

DETAIL NO.				REVISED	DETAIL NO.
120	MARICOPA ASSOCIATION of GOVERNMENTS	STANDARD DETAIL ENGLISH	SURVEY MARKER	01-01-2014	120

SECTION 324 – REVISED 4-3-14

PORTLAND CEMENT CONCRETE PAVEMENT (PCCP)

324.1 DESCRIPTION:

This item shall consist of construction of a pavement composed of plain jointed portland cement concrete on a prepared subgrade. The Contractor shall furnish all labor, materials and equipment necessary for the construction of the pavement in accordance with these specifications and in reasonably close conformity to the lines, grades, thicknesses and details indicated by the plans or as established by the Engineer. All tests shall be performed by a laboratory approved by the Engineer.

324.2 MATERIALS:

324.2.1 Portland Cement Concrete: Portland cement concrete shall conform to the applicable requirements of MAG Standard Specifications Section 725 and the additional requirements of this section.

Concrete shall comply with Table 725-1 for Class AA, 4000 psi unless otherwise specified by the Engineer.~~develop a modulus of rupture of not less than 520 psi within 14 days after placement, and not less than 650 psi at 28 days' age as determined by tests of specimens fabricated in accordance with ASTM C 31 and tested in accordance with ASTM C 78 procedures. The Contractor shall submit data acceptable to the Engineer at least 30 days in advance of the start of concrete paving operations which demonstrate that concrete produced with materials and proportions as proposed for use in the construction will conform to the modulus of rupture requirements of these specifications. The data shall include results of compressive strength tests conducted at the same age as modulus of rupture tests to establish the correlation which can be expected between the flexural and compressive strength properties of the concrete. The Engineer may, at his option, use compressive strength tests of specimens fabricated in accordance with ASTM C 31 and tested in accordance with ASTM C 39 to verify conformance to the modulus of rupture requirements of these specifications.~~

The maximum concrete slump shall be as determined by the approved mix design in accordance with Section 725.9.(A)(1).

324.2.2 Concrete Materials: ~~Portland cement conforming to the requirements of ASTM C 150 for Type III, low-alkali, may be used at the Contractor's option. Aggregates shall be crushed rock or gravel conforming to the requirements of ASTM C 33. Coarse aggregate gradation shall conform to requirements for Size No. 57.~~ Fine aggregates shall have an average ~~s~~Sand ~~e~~Equivalent of not less than 75 when tested in accordance with the requirements of AASHTO T-176 or ASTM D-2419.

324.2.3 Reinforcement: Tie bars shall be deformed billet steel reinforcing bars conforming to the requirements of ASTM A-615, Grade 40.

Dowel or load transfer bars shall ~~be plain round bars~~ conform~~ing~~ to the requirements of ASTM A-615, Grade 40. ~~One-half the length of each dowel bar shall be painted with one coat of tar paint~~.

~~Metal sleeves of an approved design shall be provided for use with dowel bars. Sleeves shall cover 2 inches, plus or minus 1/4 inch, of the dowel, shall have a closed end with a suitable stop to hold the end at least 1 inch from the end of the bar, and shall be designed to prevent collapse during construction.~~ An approved ~~basket~~ support system shall be used to hold bars ~~parallel to pavement surface~~ in position.

324.2.4 Curing Materials: Materials for curing concrete shall conform to the requirements of Section 726.

324.2.5 Joint Materials: Joint sealant shall be ~~a one-component, hot~~ poured type, conforming to the requirements of ~~ASTM D 3406~~ Section 729.2 or as approved by the Engineer.

~~Back-up rod or tape and bond breakers provided to control the depth of sealant, achieve the desired shape factor, support sealant against indentation and sag, or to prevent bond of the sealant to the bottom concrete surface shall be compatible with the joint sealant material.~~**(Note: revised language added to Section 324.3.9.5.1)**

DRAFT

~~Other pour-type joint sealants conforming to the requirements of Subsection 729.2 may be used if approved by the Engineer.~~

Preformed expansion joint filler shall conform to the requirements ~~of ASTM D 1751~~ Section 729.1 or as approved by the Engineer.

324.3 CONSTRUCTION METHODS:

324.3.1 General: Pavement shall be constructed with mechanical equipment utilizing stationary side forms or by the use of slipform paving equipment without stationary side forms. Manual methods of placing and finishing concrete with stationary side forms may be permitted by the Engineer for areas inaccessible for mechanical equipment.

~~Curbs, or combined~~ All curb and gutter~~, shall be constructed along the edges of all pavement where shown in the plans and shall be formed to the cross~~ section~~ in accordance with the plans. Curbs may be constructed integrally with the pavement using a slipform or extrusion equipment or placed immediately after finishing operations by hand forming or using face forms. They may also be constructed as a separate operation after pavement construction using forms, slipform, or extrusion equipment. The edge of each gutter of the curb and gutter section built first may be used as a form in lieu of the setting of stationary side forms. Curbs, or curb and gutter, constructed as a separate operation shall otherwise conform to the requirements of Section 340.~~ Shall have the dame Class of concrete as the adjacent PCCP.~~All curbs and gutters~~ Gutter sections shall have the same thickness as the ~~main roadway~~ PCCP section. All curbs or combined curb and gutter joints shall ~~be~~ align~~ed~~ with roadway joints.

324.3.2 Equipment: Design, capacity, and mechanical condition of equipment and tools necessary for handling materials and performing all parts of the work shall be approved by the Engineer. Equipment shall be at the jobsite sufficiently ahead of the start of concrete paving operations to permit thorough examination and approval by the Engineer prior to start of concrete paving.

Equipment used to place concrete may consist of one or more machines, shall be capable of uniformly distributing and consolidating the concrete as it is placed without segregation and shall be capable of producing concrete pavement which will conform to the required cross-section with a minimum of hand work. The number and capacity of machines furnished shall be adequate to perform the work required at a rate equal to the concrete delivery rate.

Vibrators shall be used to consolidate concrete; the rate of vibration shall be not less than 3,500 cycles per minute for surface vibrators and not less than 8,000 cycles per minute for internal vibrators. Power to vibrators mounted on mechanical equipment shall be so connected that vibration ceases when forward or backward motion of the machine is stopped. Contractor shall furnish a tachometer or other suitable device for measuring and indicating the frequency of vibration.

Slipform pavers shall be equipped with high frequency internal vibrators mounted with axes either parallel or normal to pavement alignment for the full paving width. Vibrators mounted with axes parallel with pavement alignment shall be spaced at intervals not to exceed 24 inches, measured center-to-center. Vibrators mounted with axes normal to pavement alignment shall be spaced so that lateral clearance between individual vibrating units does not exceed 6 inches.

Slipform paving equipment which will be wholly or partially supported on subgrade shall be equipped with traveling side forms of sufficient dimensions, shape and strength to support the concrete at free edges laterally for a sufficient length of time during placement to produce pavement of the required cross-section, and shall be equipped and operate with automatic sensing and control devices such that the machine automatically senses deviations from the established guideline and performs the necessary corrective maneuvers to overcome variations from correct grade and alignment.

When concrete will be placed adjacent to existing pavement or curb and gutter, that part of the equipment supported on the existing pavement or curb and gutter shall be equipped with protective pads on crawler tracks or rubber-tired wheels with bearing surfaces offset a sufficient distance from the edge of the pavement or curb and gutter to avoid

DRAFT

edge damage, or the surface of the existing pavement or curb and gutter shall be otherwise protected against such damage in a manner approved by the Engineer.

324.3.3 Subgrade and Base Preparation: Subgrade and base shall conform to the applicable compaction requirements of section 601 and elevation tolerances specified for the material involved, shall be kept smooth and compacted, and shall be free of all loose and extraneous material when concrete is placed.

The surface of the subgrade shall be uniformly moist when concrete is placed. The surface of the subgrade shall be moistened immediately prior to placement of concrete if necessary to produce a uniformly moist condition. Any excess water standing in pools or flowing on the surface shall be removed prior to placing concrete.

~~Construction equipment shall not operate on the subgrade in the paving lane when conditions of the job will permit operation from outside the lane. When job conditions make it necessary to operate equipment on the subgrade in the paving lane, suitable runways or other precautions shall be taken to prevent rutting or displacement of subgrade material. The grade shall be checked and corrected immediately ahead of concrete placement and all disturbed grade shall be properly recompacted.~~ **(Note: moved to 324.3.5)**

~~When concrete pavement will be placed with slipform paving equipment which will be supported and operate on the subgrade, the subgrade and slipform paver track area shall be brought to proper grade and cross section by means of a properly designed and operated machine.~~ **(Note: moved to 324.3.6(a))**

324.3.4 Stationary Side Forms and Setting of Forms: Side form sections shall be straight, free from warps, bends, indentations or other defects. Side forms shall be of metal, have a base width of at least four inches and a minimum depth equal to the thickness of the pavement. No section shall show a variation from a true plane greater than 1/8 inch in ten feet on the top of the form or more than 1/4 inch in ten feet on the inside face. Flexible or curved forms of proper radius shall be used for curves of 100 feet radius or less. Suitable materials other than metal may be used to form end closures or at other locations where use of metal forms is not practical ~~when approved by the Engineer~~. Forms shall be thoroughly cleaned and oiled each time they are used.

Forms shall be of such cross-section and strength and so secured and supported on the subgrade as to resist the pressure of the concrete when placed and the impact and vibration of any equipment they are to support without springing or settlement. The method of connection between sections shall be such that the joints shall not move in any direction.

Subgrade under forms shall be compacted and cut to grade so that the form when set will be uniformly supported for its entire length at the specified elevation. Forms shall be so supported and secured during the entire operation of placing and finishing that they will not deviate vertically at any point more than 1/8 inch from the proper elevation. Forms shall be set to the required lines and grades well in advance and for a distance sufficient to prevent delay in placing concrete, and shall be approved by the Engineer prior to placing concrete. When any form has been disturbed or any grade has become unstable, the form shall be reset and rechecked.

Side forms shall remain in place until the day after placing concrete, and in all cases until the edge of the pavement no longer requires the protection of the forms. Forms shall be carefully removed in such a manner as to avoid damage to the pavement. Use of pry bars between the pavement and the forms will not be permitted.

324.3.5 Placing, Spreading and Compacting: Construction equipment shall not operate on the subgrade in the paving lane when conditions of the job will permit operation from outside the lane. When job conditions make it necessary to operate equipment on the subgrade in the paving lane, suitable runways or other precautions shall be taken to prevent rutting or displacement of subgrade material. The grade shall be checked and corrected immediately ahead of concrete placement and all disturbed grade shall be properly recompacted. Except when otherwise approved by the Engineer, concrete shall be deposited on the subgrade and spread full width using mechanical methods that result in minimal ~~a minimum of~~ handling and segregation. Necessary hand spreading shall be done with shovels, not rakes. Placement shall be continuous between transverse joints without the use of intermediate bulkheads.

DRAFT

The Contractor shall make adequate advance arrangements for preventing delay in delivery and placing of concrete. An interval of more than 15 minutes between placing of any two consecutive batches shall constitute cause for stopping operations, and Contractor shall remove all concrete placed beyond the last scheduled joint or install a construction joint in the concrete already placed at the location ~~and of the type~~ as directed by the Engineer.

Concrete shall be deposited as near to expansion and construction joints as possible without disturbing them but shall not be dumped onto a joint assembly. Concrete shall be thoroughly consolidated against and along the faces of all forms, adjacent pavement or curb and gutter, and on both sides of all joint assemblies. Vibrators shall not be permitted to come in contact with joint assemblies, the grade, or side forms, and shall not be operated longer than 15 seconds in any one location.

Manual methods of placing, spreading, and compacting may be used in the construction of pavement lanes of irregular width or widths less than 10 feet, and sections of intersections or other locations with complex variable surface configurations when permitted by the Engineer. Workmen shall not be allowed to walk in the freshly placed concrete ~~with boots or shoes coated with earth or other foreign substances~~.

324.3.6 Shaping and Initial Finishing: Concrete shall be struck off, consolidated, and float-finished with a slipform paver, mechanical finishing machine, vibrating screed, or by hand finishing methods when approved by the Engineer so that the complete pavement will conform to the thickness and cross ~~-~~section requirements of the plans and specifications. When the pavement being constructed is contiguous to existing parallel concrete pavement or curb and gutter, the elevation of the new pavement surface shall conform as closely as possible to the elevation of the existing pavement or gutter surface and in a manner which will prevent ponding with the difference in elevation not to exceed 1/4 inch.

Water shall not be applied to the pavement surface during screeding and finishing operations in excess of the amount lost by evaporation. Adding water to the surface of the concrete to assist in finishing operations shall not be permitted. When applications of water to the surface are required to prevent rapid evaporation of water from the surface during finishing operations, it shall be applied as a fog spray and with approved spray equipment.

324.3.6 (a) Slipform Supported on Subgrade Method: When concrete pavement will be placed with slipform paving equipment which will be supported and operate on the subgrade, the subgrade and slipform paver track area shall be brought to proper grade and cross section by means of a properly designed and operated machine. The equipment shall spread, consolidate, screed and float-finish the concrete in one complete pass of the machine. The machine shall be operated with as nearly a continuous forward movement as possible and all paving operations shall be so coordinated as to provide uniform progress with stopping and starting of the paver held to a minimum. Sliding side forms shall be rigidly held together to prevent spreading. Any edge slump of the pavement, exclusive of edge rounding, in excess of 1/4 inch shall be corrected.

No abrupt changes in longitudinal alignment of the pavement will be permitted. The horizontal deviation shall not exceed 1 inch from the alignment established by the Engineer.

While concrete is being spread, compacted and shaped, vibrating units shall be operated within fresh concrete so that the longitudinal axis, at the center of each unit, is not more than 6 inches above the top of the subgrade. Amplitude of vibration shall be sufficient to be perceptible on the surface of concrete along the entire length of vibrating units and for a distance of at least one foot ~~there from~~.

324.3.6 (b) Mechanical Equipment Supported on Fixed Form Method: When concrete is spread without the use of internal vibration, the finishing machine shall be equipped with vibrating equipment that will internally vibrate the concrete for the full paving width and with not less than two oscillating or reciprocating screeds. Concrete shall be struck off and consolidated so that the surface will conform to the finished grade and cross ~~-~~section shown on the project plans and with sufficient material on the surface for floating operations.

After the concrete has been struck off and consolidated, it shall be floated with a longitudinal float of a type approved by the Engineer.

DRAFT

A slipform paver or a single machine which will effectively spread, consolidate, screed, and float in one operation may be used in lieu of separate finishing and floating equipment.

324.3.6 (C) Manual Methods with Fixed Forms: Concrete shall be deposited, spread and struck off to such an elevation that, when properly consolidated, the surface will conform to the required lines and grades. Concrete shall be consolidated by internal vibration as it is struck off with a screed. A slight excess of concrete shall be kept in front of the screed at all times during the strike-off operation.

After consolidation and screeding, concrete shall be tamped to the proper surface elevation and cross -section using either a heavy plank with a length in excess of the width of pavement being placed by one foot or more, or with a mechanical vibrating unit spanning the full width between forms. The tamping plank, if used, shall be stiffened as necessary to prevent sag and shall have the lower tamping edge shod with metal. The tamping plank shall be moved forward with a combined vertical tamping and longitudinal screeding motion so that the concrete will be thoroughly consolidated and the surface screeded to the required elevation. A small surplus of concrete shall be kept in front of the tamper or vibrating unit. Tamping or vibrating shall continue until the specified cross- section is obtained and the mortar flushed slightly to the surface. On grades in excess of 5 percent a second strike board shall follow from 25 to 50 feet behind the tamper or vibrating unit and shall be used in the same manner to remove waves caused by the flow of concrete behind the first strike board.

~~Other m~~Methods other than the tamping plank may be utilized for screeding when approved by the Engineer.

Pavement shall be finished smooth and true to grade with suitable manually operated floats or powered finishing equipment.

324.3.7 Final Finishing: After the pavement has been float-finished, it shall be scraped with a 10-foot long straightedge equipped with a handle to permit operations from the edge of the pavement, and excess water and laitance shall be removed from the surface. The straightedge shall be operated parallel to the centerline of the pavement and shall be moved forward one-half length after each pass. Irregularities shall be corrected by adding or removing concrete, and disturbed places shall be again straight-edged.

Long-handled ~~wood~~ floats shall be used only in areas not accessible to finishing equipment and in emergencies, and use of such floats shall be confined to a minimum.

The addition of water to the surface of the concrete to assist in finishing operations shall not be permitted unless approved by the Engineer. When the evaporation rate on the concrete surface exceeds the rate of bleeding of the concrete, measures shall be taken ~~When addition of water to the surface is permitted~~ to prevent the rapid evaporation of water from the surface during finishing operations.~~,~~ When allowed by the Engineer, the addition of water to the surface may be permitted when applied as a fog spray with approved spray equipment immediately after screeding and/or between finishing operations. A commercial evaporation reducer that forms a monomolecular film may also be sprayed onto the concrete surface in accordance with the Manufacturer's recommendations. When either of these methods is approved and used it does not take the place of proper curing methods per Section 3.8.

Pavement edges and joints shall be edged in accordance with details shown on the project plans or as directed by the Engineer.

In advance of curing operations, pavement shall be ~~given a~~ texturedi~~ng~~. Texturing shall be performed with an artificial turf drag with a board added to assure the weight needed to obtain an approved surface. Artificial turf shall be a molded composite structure with polyethylene face, nylon and polyester backing, a pile height of 0.85 inches, and total weight of 75 oz./sq. yd. The ~~approved~~ surface obtained during initial surface texturing shall be subject to approval ~~will be made~~ by the Engineer. The texturing approved on the initial construction ~~and~~ shall not be changed without the Engineer's approval. Each time the construction is stopped or causes the texturing to stop, the artificial turf must be shaken clean before continuing.

324.3.8 Curing: Curing shall begin immediately following surface texturing and edging. Before concrete placement begins Contractor shall have at hand and ready to install ~~before concrete placement begins~~ the materials and equipment needed for adequate curing.

After finishing operations have been completed, the newly placed concrete shall be cured by moist curing methods, by application of a white pigmented liquid membrane compound conforming to the requirements of Section 726, or by a combination of these methods. All surfaces not covered by reasonably waterproof forms shall be kept damp by applying water with a nozzle that so atomizes the flow of water that a fog mist and not a spray is formed until the surface is covered with liquid membrane compound, the surface has hardened sufficiently to permit sprinkling of the surface, or moist curing by covering with wet burlap or other approved materials can be initiated. Moisture from the nozzle shall not be applied under pressure directly upon the concrete and shall not be allowed to accumulate on the concrete in a quantity sufficient to cause a flow and erode the surface. Moist curing shall be continued until liquid membrane curing compound or other type of curing membrane is applied.

Membrane curing compound shall be applied to all pavement by automatic mechanical method from a construction bridge.

The edges of concrete slabs exposed by the removal of forms shall be protected immediately to provide these exposed surfaces with continuous curing treatment equal to the method selected for curing the pavement surface.

The membrane method of curing may be applied behind the final finishing operation after all free water has disappeared from the surface. Complete and uniform coverage at the rate of one gallon per 100 square feet, or as otherwise recommended by the manufacturer, shall be required. Compound shall be kept agitated to prevent pigment from settling.

324.3.9 Joints:

324.3.9.1 General: Joints shall be provided in the pavement of the type, dimensions and at the locations as indicated in the plans or as specified herein.

Joints in concrete pavement will be designated as transverse expansion joints, longitudinal or transverse construction joints, longitudinal or transverse weakened plane joints, or isolation joints. The faces of all joints shall be perpendicular to the pavement surface. Joints shall be constructed in accordance with the details shown or referenced in the plans and in accordance with the following provisions.

At all times prior to acceptance of the construction, joints shall be maintained clean and free of all soil, gravel, and other foreign material except approved types of joint filler materials.

324.3.9.2 Longitudinal Joints: Longitudinal joints shall be weakened plane or construction joints. Longitudinal weakened plane joints shall be constructed by sawing or by insertion of a parting strip in the plastic concrete to be left in place. Longitudinal construction joints shall be constructed with tie bars or keyways as indicated in the plans.

324.3.9.3 Transverse Joints: Transverse joints shall be weakened plane, construction or expansion joints. All transverse weakened plane joints will be constructed by sawing and in accordance with the details shown in the project plans. Transverse construction joints shall be constructed ~~with dowels or with sawed keyways and~~ in accordance with the details shown or referenced in the project plans. Transverse expansion joints shall be constructed ~~as butt joints with vertical expansion joint filler and with or without dowel bars~~ in accordance with the details shown or referenced in the project plans.

Dowel bars when required shall be supported with an approved support system~~on a basket type system with a base plate on subgrade and up the side form to prevent material from entering dowel openings~~.

324.3.9.4 Joint Location: Longitudinal and transverse joints shall be constructed ~~between traffic lanes and~~ at ~~other~~ locations as indicated in the project plans.

~~Transverse construction joints shall be constructed at the end of a day's production or when placing of concrete is discontinued for more than 45 minutes. Transverse construction joints will not be allowed within 500 feet of a structure unless otherwise approved by the Engineer.~~

~~Transverse weakened plane joints in concrete placed in lanes adjacent to previously placed concrete shall be located to align with weakened plane joints in the adjacent lanes. No transverse weakened plane joint shall be constructed~~

~~within 6 feet of another transverse joint. When the planned spacing of transverse weakened plane joints results in location of a weakened plane joint within 6 feet of another transverse joint, the transverse weakened plane joint shall be relocated so it is not within 6 feet of said transverse joint.~~

~~Transverse expansion joints shall be located at the junction of the normal roadway pavement slab with bridge approach slabs and at other locations as shown on the plans.~~**(Note – this will be handled by the project plans)**

Isolation joints shall be provided around manholes, catch basins, or other elements which extend into or project through the pavement and act as point of restraint to horizontal or vertical movement of the pavement. Isolation joints shall be located in accordance with Detail 224 or as directed by the Engineer.

324.3.9.5 Construction of Joints:

324.3.9.5.1 Sawed Joints: Sawed joints shall be constructed by cutting a groove in the pavement using a single or multiple-blade power saw. The groove shall be cut to the dimensions shown on the project plans. Suitable guidelines or devices shall be used to ~~assure~~ensure joints are cut true to the lines as shown on the project plans.

If joints are sawed in stages, the initial saw cut shall be of the minimum width specified and sawed to the required depth ~~shown on the project plans~~. The depth of the initial saw cut in the construction of weakened plane joints shall be a minimum of 1/4 of slab thickness.

Sawing of weakened plane joints shall be done before uncontrolled cracking takes place, and after the concrete has hardened to the extent that tearing or raveling of the edges of the saw cut is not excessive. The exact time for all sawing shall be determined by the Contractor when not otherwise specified ~~herein~~.

Any procedure for sawing joints that result~~s~~ in premature, uncontrolled cracking shall be revised immediately. The Contractor shall be responsible for replacing or repairing areas containing uncontrolled cracking and for repairing spalled or chipped concrete along the edges of sawed joints ~~as directed and~~ to the satisfaction of the Engineer.

After saw cutting of the joint and just prior to sealing the joint, the internal joint surfaces shall be cleaned of all dirt, curing ~~and~~ compound residue, laitance and other foreign materials. The internal joint surface shall be defined as the sawed portion of the joint and the resultant crack for the full depth of the pavement.

Sealing of sawed joints where required shall be completed prior to the opening of the pavement to traffic unless otherwise approved by the Engineer. When delayed sealing of sawed joints is permitted, saw cuts and formed recess to be filled with sealant shall be protected to ensure thorough curing of the concrete along the edges of the joint recesses and to prevent entry of foreign materials into the joint. At the Contractor's option, inert compressible joint filler material such as plastic backer rod or upholstery cord may be inserted into joints immediately after sawing or forming of the joint recess to provide curing protection and prevent entry of foreign material. If absorptive filler material is used, it shall be thoroughly moistened either before or immediately after installation in the sawed groove. When filler material is rope, or similar material which does not fill the entire depth of sawed groove, it shall be depressed not less than ½ inch below the pavement surface before the pavement is opened to traffic.

324.3.9.5.2 Expansion and Construction Joints: Longitudinal and transverse expansion and construction joints shall be as required by the project plans~~of the type and formed in accordance with the details shown on Detail 224 or as directed by the Engineer~~.

324.3.9.5.3 ~~Expansion and~~ Isolation Joints: ~~Transverse expansion and i~~Isolation joints shall be 1/2 inch wide expansion joints ~~formed~~ in accordance with ~~the details shown on~~ Detail 224 or as directed by the Engineer.

324.3.9.5.4 Sealing of Joints: ~~Sealing of sawed joints where required shall be completed prior to the opening of the pavement to traffic unless otherwise approved by the Engineer. When delayed sealing of sawed joints is permitted, saw cuts and formed recess to be filled with sealant shall be protected to ensure thorough curing of the concrete along the edges of the joint recesses and to prevent entry of foreign materials into the joint. At the Contractor's option, inert compressible joint filler material such as plastic backer rod or upholstery cord may be inserted into joints immediately after sawing or forming of the joint recess to provide curing protection and prevent entry of foreign material. If absorptive filler material is used, it shall be thoroughly moistened either before or immediately after installation in the sawed groove. When filler material is rope, or similar material which does not fill the entire~~

DRAFT

~~depth of sawed groove, it shall be depressed not less than ½ inch below the pavement surface before the pavement is opened to traffic.~~ **(Note: moved to 324.3.9.5.1)**

Sealant shall be applied in accordance with the sealant manufacturer's recommendations. A primer shall be furnished and applied after the joint has been cleaned and prepared to receive sealant ~~if so~~ when indicated in the manufacturer's recommendations.

Prior to the application of the sealant, an approved type of inert, compressible joint filler material such as plastic backer rod or upholstery cord, or an approved type of bond breaker, shall be inserted along the joint in accordance with the details shown on the project plans. The joint shall then be filled with sealant to a level not less than 1/8 inch or more than 1/4 inch below the elevation of the pavement surface adjacent to the joint edge.

The equipment used to apply sealant shall be as recommended by the sealant manufacturer. Sealant shall not be spilled on the surface of the concrete pavement, and Contractor shall remove any sealant inadvertently spilled on the pavement surface.

324.3.9.5.5 Repair of Cracks, Spalls, Raveling and Tearing: Contractor shall be responsible for replacing or repairing all areas of pavement containing uncontrolled cracking, surface spalls, or other types of surface ~~defects as directed by the Engineer~~. Repairs when authorized shall be made and completed by methods acceptable to the Engineer ~~and the repair shall be completed to the satisfaction of the Engineer~~.

324.4 Tests of Finished Pavement:

324.4.1 Smoothness: ~~The pavement Surface Profile Index shall not exceed seven inches per mile in any 0.1 of a mile section or any remaining portion thereof as measured along any line parallel to the edge of the pavement except at and through intersections, and at and through railroad crossings. The surface profiles will be evaluated in accordance with the requirements of Arizona Department of Transportation Test Method 801.~~

~~After completion of all paving, the Contractor shall clean the pavement by brooming or any other method to allow the Engineer to obtain accurate profilograph readings. Profilograph readings will be taken one time in each wheel path of each lane.~~

~~Grinding will be required if necessary to produce a surface smoothness conforming to the requirements of this section. In addition, all high areas having deviations in excess of 0.3 of an inch shall be ground. After grinding, the finished surface of the ground area shall be provided with a uniform texture acceptable to the Engineer. The method of texturing shall be approved by the Engineer.~~

~~In addition to the Surface Profile Index requirement, t~~The pavement surface including pavement in intersections will be tested with a ten-foot straight-edge placed parallel to the centerline of the pavement in each lane. Ordinates measured from the face of the straight-edge to pavement surface shall at no place exceed one-quarter inch. Areas that do not meet the required surface accuracy as determined by straight-edge testing shall be marked, and Contractor shall at his own expense and as required by the Engineer either:

(1) Grind down areas higher than 1/4 inch but not more than 1/2~~½~~ inch above the correct surface.

(2) Correct areas lower than 1/4 inch but not lower than 1/2~~½~~ inch below the correct surface by grinding down the adjacent areas.

(3) ~~Break out~~ Remove and replace pavement when the deviation exceeds 1/2~~½~~ inch from the correct surface. Area replaced shall be of a length, width and depth as required to allow formation of a new slab of the required quality. The area replaced shall be compatible with the joint layout shown on the project plans as determined by the Engineer.

After grinding, the finished surface of the ground area shall be provided with a uniform texture acceptable to the Engineer. The method of texturing shall be approved by the Engineer.

DRAFT

324.4.2 Pavement Thickness: Concrete pavement shall be constructed in accordance with the thickness requirements of the plans and specifications. Tolerances for base and subgrade construction and other provisions of these specifications which may affect thickness shall not be construed to modify such thickness requirements.

For the purpose of determining acceptability for thickness, cores shall be drilled by the Contractor at the locations specified by the Engineer. Cores shall have a minimum diameter of four inches. Length of cores will be determined in accordance with the requirements of AASHTO T-148 by measurements read to the nearest thousandth of an inch. The average of the measurements will be reported to the nearest hundredth of an inch.

In calculating average length, cores which have a length in excess of the thickness specified by more than 0.25 of an inch will be deemed to have a length of the specified thickness plus 0.25 of an inch. Field length measurements will be acceptable in lieu of average length measurement in accordance with the requirements of AASHTO T-148, provided the original core in any secondary unit meets or exceeds the specified thickness. Measurements in accordance with the requirements of AASHTO T-148 will be required on any questionable thickness measurements and on the three cores used to determine the average length for payment, regardless of length.

A primary unit of pavement shall be the area of pavement placed in each day's paving operation. Each intersection or special section shall be considered as a primary unit.

A secondary unit of pavement shall consist of 1,000 linear feet, or fraction thereof, of each traffic lane. Each 1,300 square yards of pavement in intersections, etc., shall be considered a secondary unit regardless of when the concrete was placed.

One core shall be drilled in each secondary unit. If the length of that core is not deficient by more than 0.25 of an inch, that secondary unit will be measured for payment at 100 percent. If the length of that core is deficient by more than 0.25 of an inch but less than 1.0 inch, two additional cores shall be drilled within that secondary unit and the length of the three cores averaged. If the average length is not deficient by more than 0.25 of an inch, that secondary unit will be measured for payment at 100 percent. If the average length of the three cores is deficient by more than 0.25 of an inch, that secondary unit will be measured for payment in accordance with the requirements of Table 324-1.

If the core in the secondary unit is deficient by more than 1.00 inch, that core will not be used in determining the average thickness of that secondary unit. Additional cores shall be drilled at intervals not to exceed ten feet in each direction from the deficient core, parallel to the main-line centerline, until one core is obtained in each direction which is not deficient by more than 1.00 inch. The pavement between these two cores will be evaluated separately from the balance of the pavement in that secondary unit. The limits for evaluation shall be between the longitudinal weakened plane or construction joint on each side of the core and between the next transverse weakened plane, construction, or expansion joint beyond each of the last two cores. Unless the Engineer allows the pavement to remain, it shall be removed and replaced with pavement of the specified thickness and no payment will be made for the removed~~al~~ pavement. One additional core shall be drilled in the secondary unit to represent the quality of the concrete in that unit after deducting the limits of the deficient area if that pavement represented by the deficient area is allowed to remain. The core shall be measured for payment as hereinbefore specified.

If the pavement in the deficient area is removed, either by the order of the Engineer or at the option of the Contractor, it shall be removed between the limits of the evaluation. After the pavement has been replaced, one core shall be drilled at random in that secondary unit after deducting the area of the replaced pavement and one core shall be drilled in the new pavement. Pavement represented by the core drilled in the secondary unit, less the replaced pavement, will be measured for payment as hereinbefore specified. The core drilled in the replaced pavement shall be not less than the specified thickness~~,~~; otherwise that pavement will not be measured or paid for.

At all locations where cores have been drilled, the resulting holes shall be filled with concrete in a manner satisfactory to the Engineer.

DRAFT

324.5 PROTECTION OF PAVEMENT:

The Contractor shall be responsible for taking adequate steps to protect concrete placed during rain, or hot or cold weather as defined in ACI Standards. Any concrete damaged by rain or extreme temperatures shall be removed and replaced at the Contractor's expense.

When ordered by the Engineer, pavement crossings shall be constructed for the convenience of public traffic. Where motor vehicles are encountered, a temporary bridge to span the newly placed concrete will be provided.

No traffic or Contractor's equipment, except as hereinafter provided, will be permitted on the pavement until the concrete has developed a compressive strength of 3500 psi.

Equipment for sawing joints will be permitted on the pavement when, in the Contractor's judgment, the concrete has developed sufficient strength to support the equipment without damage to the concrete. In case of visible cracking or other damage to the pavement, operation of the equipment on the pavement shall be immediately discontinued.

Any damage to the pavement resulting from early use of pavement by the Contractor's equipment shall be repaired by the Contractor at his expense.

324.6 METHOD OF MEASUREMENT:

Portland ~~c~~Cement ~~c~~Concrete ~~p~~Pavement will be measured by the square yard. Any opening in excess of one square yard will not be measured for payment.

324.7 BASIS OF PAYMENT:

The accepted quantities of ~~p~~Portland ~~c~~Cement ~~c~~Concrete ~~p~~Pavement, measured as provided for herein, will be paid for at the contract unit price complete in place, except that where the average length of cores indicates pavement deficient in thickness by more than 0.25 of an inch but not more than 1.00 inch, payment will be made as specified in Table 324-1. Payment will be made to the nearest cent.

No additional payment will be allowed for pavement constructed in excess of the thickness specified on the project plans.

TABLE 324-1

PAVEMENT THICKNESS PAYMENT REDUCTION (~~AC~~PCCP)

Core Thickness, Less Than Specified Thickness, Inches	Percent of Contract Unit Price Allowed
0.00 to 0.25	100
0.26 to 0.35	93
0.36 to 0.45	85
0.46 to 0.55	75
0.56 to 0.75	63
0.76 to 1.00	50

DRAFT

PORTLAND CEMENT CONCRETE PAVEMENT (PCCP)

324.1 DESCRIPTION:

This item shall consist of construction of a pavement composed of plain jointed portland cement concrete on a prepared subgrade. The Contractor shall furnish all labor, materials and equipment necessary for the construction of the pavement in accordance with these specifications and in reasonably close conformity to the lines, grades, thicknesses and details indicated by the plans or as established by the Engineer. All tests shall be performed by a laboratory approved by the Engineer.

324.2 MATERIALS:

324.2.1 Portland Cement Concrete: Portland cement concrete shall conform to the applicable requirements of MAG Standard Specifications Section 725 and the additional requirements of this section.

Concrete shall comply with Table 725-1 for Class AA, 4000 psi unless otherwise specified by the Engineer.

The maximum concrete slump shall be as determined by the approved mix design in accordance with Section 725.9.(A)(1).

324.2.2 Concrete Materials: Fine aggregates shall have an average Sand Equivalent of not less than 75 when tested in accordance with the requirements of AASHTO T-176 or ASTM D-2419.

324.2.3 Reinforcement: Tie bars shall be deformed billet steel reinforcing bars conforming to the requirements of ASTM A-615, Grade 40.

Dowel or load transfer bars shall conform to the requirements of ASTM A-615, Grade 40. .
An approved support system shall be used to hold bars in position.

324.2.4 Curing Materials: Materials for curing concrete shall conform to the requirements of Section 726.

324.2.5 Joint Materials: Joint sealant shall be poured type, conforming to the requirements of Section 729.2 or as approved by the Engineer.

Preformed expansion joint filler shall conform to the requirements Section 729.1 or as approved by the Engineer.

324.3 CONSTRUCTION METHODS:

324.3.1 General: Pavement shall be constructed with mechanical equipment utilizing stationary side forms or by the use of slipform paving equipment without stationary side forms. Manual methods of placing and finishing concrete with stationary side forms may be permitted by the Engineer for areas inaccessible for mechanical equipment.

All curb and gutter Shall have the dame Class of concrete as the adjacent PCCP. Gutter sections shall have the same thickness as the PCCP section. All curbs or combined curb and gutter joints shall align with roadway joints.

324.3.2 Equipment: Design, capacity, and mechanical condition of equipment and tools necessary for handling materials and performing all parts of the work shall be approved by the Engineer. Equipment shall be at the jobsite sufficiently ahead of the start of concrete paving operations to permit thorough examination and approval by the Engineer prior to start of concrete paving.

Equipment used to place concrete may consist of one or more machines, shall be capable of uniformly distributing and consolidating the concrete as it is placed without segregation and shall be capable of producing concrete pavement which will conform to the required cross-section with a minimum of hand work. The number and capacity of machines furnished shall be adequate to perform the work required at a rate equal to the concrete delivery rate.

DRAFT

Vibrators shall be used to consolidate concrete; the rate of vibration shall be not less than 3,500 cycles per minute for surface vibrators and not less than 8,000 cycles per minute for internal vibrators. Power to vibrators mounted on mechanical equipment shall be so connected that vibration ceases when forward or backward motion of the machine is stopped. Contractor shall furnish a tachometer or other suitable device for measuring and indicating the frequency of vibration.

Slipform pavers shall be equipped with high frequency internal vibrators mounted with axes either parallel or normal to pavement alignment for the full paving width. Vibrators mounted with axes parallel with pavement alignment shall be spaced at intervals not to exceed 24 inches, measured center-to-center. Vibrators mounted with axes normal to pavement alignment shall be spaced so that lateral clearance between individual vibrating units does not exceed 6 inches.

Slipform paving equipment which will be wholly or partially supported on subgrade shall be equipped with traveling side forms of sufficient dimensions, shape and strength to support the concrete at free edges laterally for a sufficient length of time during placement to produce pavement of the required cross-section, and shall be equipped and operate with automatic sensing and control devices such that the machine automatically senses deviations from the established guideline and performs the necessary corrective maneuvers to overcome variations from correct grade and alignment.

When concrete will be placed adjacent to existing pavement or curb and gutter, that part of the equipment supported on the existing pavement or curb and gutter shall be equipped with protective pads on crawler tracks or rubber-tired wheels with bearing surfaces offset a sufficient distance from the edge of the pavement or curb and gutter to avoid edge damage, or the surface of the existing pavement or curb and gutter shall be otherwise protected against such damage in a manner approved by the Engineer.

324.3.3 Subgrade and Base Preparation: Subgrade and base shall conform to the applicable compaction requirements of section 601 and elevation tolerances specified for the material involved, shall be kept smooth and compacted, and shall be free of all loose and extraneous material when concrete is placed.

The surface of the subgrade shall be uniformly moist when concrete is placed. The surface of the subgrade shall be moistened immediately prior to placement of concrete if necessary to produce a uniformly moist condition. Any excess water standing in pools or flowing on the surface shall be removed prior to placing concrete.

324.3.4 Stationary Side Forms and Setting of Forms: Side form sections shall be straight, free from warps, bends, indentations or other defects. Side forms shall be of metal, have a base width of at least four inches and a minimum depth equal to the thickness of the pavement. No section shall show a variation from a true plane greater than 1/8 inch in ten feet on the top of the form or more than 1/4 inch in ten feet on the inside face. Flexible or curved forms of proper radius shall be used for curves of 100 feet radius or less. Suitable materials other than metal may be used to form end closures or at other locations where use of metal forms is not practical. Forms shall be thoroughly cleaned and oiled each time they are used.

Forms shall be of such cross section and strength and so secured and supported on the subgrade as to resist the pressure of the concrete when placed and the impact and vibration of any equipment they are to support without springing or settlement. The method of connection between sections shall be such that the joints shall not move in any direction.

Subgrade under forms shall be compacted and cut to grade so that the form when set will be uniformly supported for its entire length at the specified elevation. Forms shall be so supported and secured during the entire operation of placing and finishing that they will not deviate vertically at any point more than 1/8 inch from the proper elevation. Forms shall be set to the required lines and grades well in advance and for a distance sufficient to prevent delay in placing concrete, and shall be approved by the Engineer prior to placing concrete. When any form has been disturbed or any grade has become unstable, the form shall be reset and rechecked.

DRAFT

Side forms shall remain in place until the day after placing concrete, and in all cases until the edge of the pavement no longer requires the protection of the forms. Forms shall be carefully removed in such a manner as to avoid damage to the pavement. Use of pry bars between the pavement and the forms will not be permitted.

324.3.5 Placing, Spreading and Compacting: Construction equipment shall not operate on the subgrade in the paving lane when conditions of the job will permit operation from outside the lane. When job conditions make it necessary to operate equipment on the subgrade in the paving lane, suitable runways or other precautions shall be taken to prevent rutting or displacement of subgrade material. The grade shall be checked and corrected immediately ahead of concrete placement and all disturbed grade shall be properly recompacted. Except when otherwise approved by the Engineer, concrete shall be deposited on the subgrade and spread full width using mechanical methods that result in minimal handling and segregation. Necessary hand spreading shall be done with shovels, not rakes. Placement shall be continuous between transverse joints without the use of intermediate bulkheads.

The Contractor shall make adequate advance arrangements for preventing delay in delivery and placing of concrete. An interval of more than 15 minutes between placing of any two consecutive batches shall constitute cause for stopping operations, and Contractor shall remove all concrete placed beyond the last scheduled joint or install a construction joint in the concrete already placed at the location as directed by the Engineer.

Concrete shall be deposited as near to expansion and construction joints as possible without disturbing them but shall not be dumped onto a joint assembly. Concrete shall be thoroughly consolidated against and along the faces of all forms, adjacent pavement or curb and gutter, and on both sides of all joint assemblies. Vibrators shall not be permitted to come in contact with joint assemblies, the grade, or side forms, and shall not be operated longer than 15 seconds in any one location.

Manual methods of placing, spreading, and compacting may be used in the construction of pavement lanes of irregular width or widths less than 10 feet, and sections of intersections or other locations with complex variable surface configurations when permitted by the Engineer. Workmen shall not be allowed to walk in the freshly placed concrete.

324.3.6 Shaping and Initial Finishing: Concrete shall be struck off, consolidated, and float-finished with a slipform paver, mechanical finishing machine, vibrating screed, or by hand finishing methods when approved by the Engineer so that the complete pavement will conform to the thickness and cross section requirements of the plans and specifications. When the pavement being constructed is contiguous to existing parallel concrete pavement or curb and gutter, the elevation of the new pavement surface shall conform as closely as possible to the elevation of the existing pavement or gutter surface and in a manner which will prevent ponding with the difference in elevation not to exceed 1/4 inch.

Water shall not be applied to the pavement surface during screeding and finishing operations in excess of the amount lost by evaporation. Adding water to the surface of the concrete to assist in finishing operations shall not be permitted. When applications of water to the surface are required to prevent rapid evaporation of water from the surface during finishing operations, it shall be applied as a fog spray and with approved spray equipment.

324.3.6 (a) Slipform Supported on Subgrade Method: When concrete pavement will be placed with slipform paving equipment which will be supported and operate on the subgrade, the subgrade and slipform paver track area shall be brought to proper grade and cross section by means of a properly designed and operated machine. The equipment shall spread, consolidate, screed and float-finish the concrete in one complete pass of the machine. The machine shall be operated with as nearly a continuous forward movement as possible and all paving operations shall be so coordinated as to provide uniform progress with stopping and starting of the paver held to a minimum. Sliding side forms shall be rigidly held together to prevent spreading. Any edge slump of the pavement, exclusive of edge rounding, in excess of 1/4 inch shall be corrected.

No abrupt changes in longitudinal alignment of the pavement will be permitted. The horizontal deviation shall not exceed 1 inch from the alignment established by the Engineer.

DRAFT

While concrete is being spread, compacted and shaped, vibrating units shall be operated within fresh concrete so that the longitudinal axis, at the center of each unit, is not more than 6 inches above the top of the subgrade. Amplitude of vibration shall be sufficient to be perceptible on the surface of concrete along the entire length of vibrating units and for a distance of at least one foot.

324.3.6 (b) Mechanical Equipment Supported on Fixed Form Method: When concrete is spread without the use of internal vibration, the finishing machine shall be equipped with vibrating equipment that will internally vibrate the concrete for the full paving width and with not less than two oscillating or reciprocating screeds. Concrete shall be struck off and consolidated so that the surface will conform to the finished grade and cross section shown on the project plans and with sufficient material on the surface for floating operations.

After the concrete has been struck off and consolidated, it shall be floated with a longitudinal float of a type approved by the Engineer.

A slipform paver or a single machine which will effectively spread, consolidate, screed, and float in one operation may be used in lieu of separate finishing and floating equipment.

324.3.6 (C) Manual Methods with Fixed Forms: Concrete shall be deposited, spread and struck off to such an elevation that, when properly consolidated, the surface will conform to the required lines and grades. Concrete shall be consolidated by internal vibration as it is struck off with a screed. A slight excess of concrete shall be kept in front of the screed at all times during the strike-off operation.

After consolidation and screeding, concrete shall be tamped to the proper surface elevation and cross section using either a heavy plank with a length in excess of the width of pavement being placed by one foot or more, or with a mechanical vibrating unit spanning the full width between forms. The tamping plank, if used, shall be stiffened as necessary to prevent sag and shall have the lower tamping edge shod with metal. The tamping plank shall be moved forward with a combined vertical tamping and longitudinal screeding motion so that the concrete will be thoroughly consolidated and the surface screeded to the required elevation. A small surplus of concrete shall be kept in front of the tamper or vibrating unit. Tamping or vibrating shall continue until the specified cross section is obtained and the mortar flushed slightly to the surface. On grades in excess of 5 percent a second strike board shall follow from 25 to 50 feet behind the tamper or vibrating unit and shall be used in the same manner to remove waves caused by the flow of concrete behind the first strike board.

Methods other than the tamping plank may be utilized for screeding when approved by the Engineer.

Pavement shall be finished smooth and true to grade with suitable manually operated floats or powered finishing equipment.

324.3.7 Final Finishing: After the pavement has been float-finished, it shall be scraped with a 10-foot long straightedge equipped with a handle to permit operations from the edge of the pavement, and excess water and laitance shall be removed from the surface. The straightedge shall be operated parallel to the centerline of the pavement and shall be moved forward one-half length after each pass. Irregularities shall be corrected by adding or removing concrete, and disturbed places shall be again straight-edged.

Long-handled floats shall be used only in areas not accessible to finishing equipment and in emergencies, and use of such floats shall be confined to a minimum.

The addition of water to the surface of the concrete to assist in finishing operations shall not be permitted unless approved by the Engineer. When the evaporation rate on the concrete surface exceeds the rate of bleeding of the concrete, measures shall be taken to prevent the rapid evaporation of water from the surface during finishing operations, When allowed by the Engineer, the addition of water to the surface may be permitted when applied as a fog spray with approved spray equipment immediately after screeding and/or between finishing operations. A commercial evaporation reducer that forms a monomolecular film may also be sprayed onto the concrete surface in accordance with the Manufacturer's recommendations. When either of these methods is approved and used it does not take the place of proper curing methods per Section 3.8.

DRAFT

Pavement edges and joints shall be edged in accordance with details shown on the project plans or as directed by the Engineer.

In advance of curing operations, pavement shall be textured. Texturing shall be performed with an artificial turf drag with a board added to assure the weight needed to obtain an approved surface. Artificial turf shall be a molded composite structure with polyethylene face, nylon and polyester backing, a pile height of 0.85 inches, and total weight of 75 oz./sq. yd. The surface obtained during initial surface texturing shall be subject to approval by the Engineer. The texturing approved on the initial construction shall not be changed without the Engineer's approval. Each time the construction is stopped or causes the texturing to stop, the artificial turf must be shaken clean before continuing.

324.3.8 Curing: Curing shall begin immediately following surface texturing and edging. Before concrete placement begins Contractor shall have at hand and ready to install the materials and equipment needed for adequate curing.

After finishing operations have been completed, the newly placed concrete shall be cured by moist curing methods, by application of a white pigmented liquid membrane compound conforming to the requirements of Section 726, or by a combination of these methods. All surfaces not covered by reasonably waterproof forms shall be kept damp by applying water with a nozzle that so atomizes the flow of water that a fog mist and not a spray is formed until the surface is covered with liquid membrane compound, the surface has hardened sufficiently to permit sprinkling of the surface, or moist curing by covering with wet burlap or other approved materials can be initiated. Moisture from the nozzle shall not be applied under pressure directly upon the concrete and shall not be allowed to accumulate on the concrete in a quantity sufficient to cause a flow and erode the surface. Moist curing shall be continued until liquid membrane curing compound or other type of curing membrane is applied.

Membrane curing compound shall be applied to all pavement by automatic mechanical method from a construction bridge.

The edges of concrete slabs exposed by the removal of forms shall be protected immediately to provide these exposed surfaces with continuous curing treatment equal to the method selected for curing the pavement surface.

The membrane method of curing may be applied behind the final finishing operation after all free water has disappeared from the surface. Complete and uniform coverage at the rate of one gallon per 100 square feet, or as otherwise recommended by the manufacturer, shall be required. Compound shall be kept agitated to prevent pigment from settling.

324.3.9 Joints:

324.3.9.1 General: Joints shall be provided in the pavement of the type, dimensions and at the locations as indicated in the plans or as specified herein.

Joints in concrete pavement will be designated as transverse expansion joints, longitudinal or transverse construction joints, longitudinal or transverse weakened plane joints, or isolation joints. The faces of all joints shall be perpendicular to the pavement surface. Joints shall be constructed in accordance with the details shown or referenced in the plans and in accordance with the following provisions.

At all times prior to acceptance of the construction, joints shall be maintained clean and free of all soil, gravel, and other foreign material except approved types of joint filler materials.

324.3.9.2 Longitudinal Joints: Longitudinal joints shall be weakened plane or construction joints. Longitudinal weakened plane joints shall be constructed by sawing or by insertion of a parting strip in the plastic concrete to be left in place. Longitudinal construction joints shall be constructed with tie bars or keyways as indicated in the plans.

324.3.9.3 Transverse Joints: Transverse joints shall be weakened plane, construction or expansion joints. All transverse weakened plane joints will be constructed by sawing and in accordance with the details shown in the project plans. Transverse construction joints shall be constructed in accordance with the details shown or referenced in the project plans. Transverse expansion joints shall be constructed in accordance with the details shown or referenced in the project plans.

Dowel bars when required shall be supported with an approved support system.

324.3.9.4 Joint Location: Longitudinal and transverse joints shall be constructed at locations as indicated in the project plans.

Isolation joints shall be provided around manholes, catch basins, or other elements which extend into or project through the pavement and act as point of restraint to horizontal or vertical movement of the pavement. Isolation joints shall be located in accordance with Detail 224 or as directed by the Engineer.

324.3.9.5 Construction of Joints:

324.3.9.5.1 Sawed Joints: Sawed joints shall be constructed by cutting a groove in the pavement using a single or multiple-blade power saw. The groove shall be cut to the dimensions shown on the project plans. Suitable guidelines or devices shall be used to ensure joints are cut true to the lines as shown on the project plans.

If joints are sawed in stages, the initial saw cut shall be of the minimum width specified and sawed to the required depth. The depth of the initial saw cut in the construction of weakened plane joints shall be a minimum of 1/4 of slab thickness.

Sawing of weakened plane joints shall be done before uncontrolled cracking takes place, and after the concrete has hardened to the extent that tearing or raveling of the edges of the saw cut is not excessive. The exact time for all sawing shall be determined by the Contractor when not otherwise specified.

Any procedure for sawing joints that result in premature, uncontrolled cracking shall be revised immediately. The Contractor shall be responsible for replacing or repairing areas containing uncontrolled cracking and for repairing spalled or chipped concrete along the edges of sawed joints to the satisfaction of the Engineer.

After saw cutting of the joint and just prior to sealing the joint, the internal joint surfaces shall be cleaned of all dirt, curing compound residue, laitance and other foreign materials. The internal joint surface shall be defined as the sawed portion of the joint and the resultant crack for the full depth of the pavement.

Sealing of sawed joints where required shall be completed prior to the opening of the pavement to traffic unless otherwise approved by the Engineer. When delayed sealing of sawed joints is permitted, saw cuts and formed recess to be filled with sealant shall be protected to ensure thorough curing of the concrete along the edges of the joint recesses and to prevent entry of foreign materials into the joint. At the Contractor's option, inert compressible joint filler material such as plastic backer rod or upholstery cord may be inserted into joints immediately after sawing or forming of the joint recess to provide curing protection and prevent entry of foreign material. If absorptive filler material is used, it shall be thoroughly moistened either before or immediately after installation in the sawed groove. When filler material is rope, or similar material which does not fill the entire depth of sawed groove, it shall be depressed not less than ½ inch below the pavement surface before the pavement is opened to traffic.

324.3.9.5.2 Expansion and Construction Joints: Longitudinal and transverse expansion and construction joints shall be as required by the project plans.

324.3.9.5.3 Isolation Joints: Isolation joints shall be 1/2 inch wide expansion joints in accordance with Detail 224 or as directed by the Engineer.

324.3.9.5.4 Sealing of Joints: Sealant shall be applied in accordance with the sealant manufacturer's recommendations. A primer shall be furnished and applied after the joint has been cleaned and prepared to receive sealant when indicated in the manufacturer's recommendations.

Prior to the application of the sealant, an approved type of inert, compressible joint filler material such as plastic backer rod or upholstery cord, or an approved type of bond breaker, shall be inserted along the joint in accordance with the details shown on the project plans. The joint shall then be filled with sealant to a level not less than 1/8 inch or more than 1/4 inch below the elevation of the pavement surface adjacent to the joint edge.

DRAFT

The equipment used to apply sealant shall be as recommended by the sealant manufacturer. Sealant shall not be spilled on the surface of the concrete pavement, and Contractor shall remove any sealant inadvertently spilled on the pavement surface.

324.3.9.5.5 Repair of Cracks, Spalls, Raveling and Tearing: Contractor shall be responsible for replacing or repairing all areas of pavement containing uncontrolled cracking, surface spalls, or other types of surface. Repairs when authorized shall be made and completed by methods acceptable to the Engineer.

324.4 Tests of Finished Pavement:

324.4.1 Smoothness:
The pavement surface including pavement in intersections will be tested with a ten-foot straight-edge placed parallel to the centerline of the pavement in each lane. Ordinates measured from the face of the straight-edge to pavement surface shall at no place exceed one-quarter inch. Areas that do not meet the required surface accuracy as determined by straight-edge testing shall be marked, and Contractor shall at his own expense and as required by the Engineer either:

(1) Grind down areas higher than 1/4 inch but not more than 1/2 inch above the correct surface.

(2) Correct areas lower than 1/4 inch but not lower than 1/2 inch below the correct surface by grinding down the adjacent areas.

(3) Remove and replace pavement when the deviation exceeds 1/2 inch from the correct surface. Area replaced shall be of a length, width and depth as required to allow formation of a new slab of the required quality. The area replaced shall be compatible with the joint layout shown on the project plans as determined by the Engineer.

After grinding, the finished surface of the ground area shall be provided with a uniform texture acceptable to the Engineer. The method of texturing shall be approved by the Engineer.

324.4.2 Pavement Thickness: Concrete pavement shall be constructed in accordance with the thickness requirements of the plans and specifications. Tolerances for base and subgrade construction and other provisions of these specifications which may affect thickness shall not be construed to modify such thickness requirements.

For the purpose of determining acceptability for thickness, cores shall be drilled by the Contractor at the locations specified by the Engineer. Cores shall have a minimum diameter of four inches. Length of cores will be determined in accordance with the requirements of AASHTO T148 by measurements read to the nearest thousandth of an inch. The average of the measurements will be reported to the nearest hundredth of an inch.

In calculating average length, cores which have a length in excess of the thickness specified by more than 0.25 of an inch will be deemed to have a length of the specified thickness plus 0.25 of an inch. Field length measurements will be acceptable in lieu of average length measurement in accordance with the requirements of AASHTO T-148, provided the original core in any secondary unit meets or exceeds the specified thickness. Measurements in accordance with the requirements of AASHTO T-148 will be required on any questionable thickness measurements and on the three cores used to determine the average length for payment, regardless of length.

A primary unit of pavement shall be the area of pavement placed in each day's paving operation. Each intersection or special section shall be considered as a primary unit.

A secondary unit of pavement shall consist of 1,000 linear feet, or fraction thereof, of each traffic lane. Each 1,300 square yards of pavement in intersections, etc., shall be considered a secondary unit regardless of when the concrete was placed.

One core shall be drilled in each secondary unit. If the length of that core is not deficient by more than 0.25 of an inch, that secondary unit will be measured for payment at 100 percent. If the length of that core is deficient by more

DRAFT

than 0.25 of an inch but less than 1.0 inch, two additional cores shall be drilled within that secondary unit and the length of the three cores averaged. If the average length is not deficient by more than 0.25 of an inch, that secondary unit will be measured for payment at 100 percent. If the average length of the three cores is deficient by more than 0.25 of an inch, that secondary unit will be measured for payment in accordance with the requirements of Table 324-1.

If the core in the secondary unit is deficient by more than 1.00 inch, that core will not be used in determining the average thickness of that secondary unit. Additional cores shall be drilled at intervals not to exceed ten feet in each direction from the deficient core, parallel to the main-line centerline, until one core is obtained in each direction which is not deficient by more than 1.00 inch. The pavement between these two cores will be evaluated separately from the balance of the pavement in that secondary unit. The limits for evaluation shall be between the longitudinal weakened plane or construction joint on each side of the core and between the next transverse weakened plane, construction, or expansion joint beyond each of the last two cores. Unless the Engineer allows the pavement to remain, it shall be removed and replaced with pavement of the specified thickness and no payment will be made for the removed pavement. One additional core shall be drilled in the secondary unit to represent the quality of the concrete in that unit after deducting the limits of the deficient area if that pavement represented by the deficient area is allowed to remain. The core shall be measured for payment as hereinbefore specified.

If the pavement in the deficient area is removed, either by the order of the Engineer or at the option of the Contractor, it shall be removed between the limits of the evaluation. After the pavement has been replaced, one core shall be drilled at random in that secondary unit after deducting the area of the replaced pavement and one core shall be drilled in the new pavement. Pavement represented by the core drilled in the secondary unit, less the replaced pavement, will be measured for payment as hereinbefore specified. The core drilled in the replaced pavement shall be not less than the specified thickness; otherwise that pavement will not be measured or paid for.

At all locations where cores have been drilled, the resulting holes shall be filled with concrete in a manner satisfactory to the Engineer.

324.5 PROTECTION OF PAVEMENT:

The Contractor shall be responsible for taking adequate steps to protect concrete placed during rain, or hot or cold weather as defined in ACI Standards. Any concrete damaged by rain or extreme temperatures shall be removed and replaced at the Contractor's expense.

When ordered by the Engineer, pavement crossings shall be constructed for the convenience of public traffic. Where motor vehicles are encountered, a temporary bridge to span the newly placed concrete will be provided.

No traffic or Contractor's equipment, except as hereinafter provided, will be permitted on the pavement until the concrete has developed a compressive strength of 3500 psi.

Equipment for sawing joints will be permitted on the pavement when, in the Contractor's judgment, the concrete has developed sufficient strength to support the equipment without damage to the concrete. In case of visible cracking or other damage to the pavement, operation of the equipment on the pavement shall be immediately discontinued.

Any damage to the pavement resulting from early use of pavement by the Contractor's equipment shall be repaired by the Contractor at his expense.

324.6 METHOD OF MEASUREMENT:

Portland Cement Concrete Pavement will be measured by the square yard. Any opening in excess of one square yard will not be measured for payment.

324.7 BASIS OF PAYMENT:

The accepted quantities of Portland Cement Concrete Pavement, measured as provided for herein, will be paid for at the contract unit price complete in place, except that where the average length of cores indicates pavement deficient

DRAFT

in thickness by more than 0.25 of an inch but not more than 1.00 inch, payment will be made as specified in Table 324-1. Payment will be made to the nearest cent.

No additional payment will be allowed for pavement constructed in excess of the thickness specified on the project plans.

TABLE 324-1	
PAVEMENT THICKNESS PAYMENT REDUCTION (PCCP)	
Core Thickness, Less Than Specified Thickness, Inches	Percent of Contract Unit Price Allowed
0.00 to 0.25	100
0.26 to 0.35	93
0.36 to 0.45	85
0.46 to 0.55	75
0.56 to 0.75	63
0.76 to 1.00	50

DRAFT

MARICOPA COUNTY
Department of Transportation

MEMORANDUM

Date: March 20, 2014

To: MAG Specifications and Details Committee

From: Robert Herz, MCDOT Representative

Subject: Revision to Section 735 REINFORCED CONCRETE PIPE and Section 618 STORM DRAIN CONSTRUCTION to add Elliptical and Arch RCP **Case 14-07**

PURPOSE: Modify section 735 specification to include reinforced concrete arch pipe and reinforced concrete elliptical pipe for use with storm and irrigation water. Also modifies section 618 to coordinate with modified section 735.

REVISION: See the attached redlined strike-out version of the specification for revisions.

2901 West Durango Street Phoenix, Arizona 85009 Phone: 602-506-4760 Fax: 602-506-5969

REINFORCED CONCRETE PIPE

735.1 GENERAL:

These specifications cover reinforced concrete pipe and related structures intended to be used for conveyance of sewage, industrial waste, and storm and irrigation water.

Except as modified herein reinforced concrete pipe shall be manufactured and tested in conformance with the requirements of ASTM C76 for circular pipe, ASTM C506 for arch pipe, and ASTM C507 for elliptical pipe~~, except as modified herein.~~

~~The size, type, and D-load of the concrete pipe to be furnished shall be as shown on the plans, or as specified under the item of work for the project of which the pipe is a part and shall be for pipe installed by the open-cut method of construction.~~

~~When specified in the special provisions, four sets of pipe line layout drawings shall be furnished to the Engineer prior to the manufacture of the concrete pipe. Catch basin connector pipe need not be included in the pipe line layout; however, pipe stubs shall be included. In lieu of including catch basin connector pipe in the pipe layout, a list of catch basin connector pipes shall accompany the layout. The connector pipe list shall contain the following information.~~

~~(A) Size and D-load of pipe.~~

~~(B) Station at which pipe joins main line.~~

~~(C) Number of section of pipe, length of section, type of sections (straight, horizontal bevel, vertical bevel, etc.).~~

~~The pipe layouts will be used by the Contracting Agency for reference only, but their use shall in no way relieve the Contractor of the responsibility for the correctness of the layout.~~

~~(D) All pipe installed in tunnels shall be ASTM C76, Class III. Pipe stronger than that specified may be furnished at the Contractor's option, and at no additional cost to the Contracting Agency, provided such pipe conforms in all other respects to the applicable provisions of these specifications.~~

Whatever struts or other protective methods proved necessary to furnish and install the pipe to meet the limitation of cracks as specified herein, shall be provided and maintained throughout pipe handling and transportation.

735.2 ~~QUALITY~~BELL JOINT REINFORCEMENT:

~~Reinforced concrete pipe shall be manufactured and tested in conformance with the requirements of ASTM C76, except as modified herein.~~

All reinforced concrete pipes less than 36 inch inside diameter and the same approximate equivalent size shall include an area of reinforcing steel in the bell not less than the area required for the circumferential reinforcement in the wall of the pipe.

735.3 CURVES, BENDS AND CLOSURES:

Horizontal and vertical long-radius curves shall be formed by bevel adapters or by beveling the straight pipe joint. The bevel of the pipe shall not exceed 5 degrees and the total angular deflection, for beveled pipe, shall not exceed 10 degrees. Small angular changes may be made with straight pipe provided that the joint opening does not exceed 3/4 inch. Short radius curves and closures shall be formed with fabricated specials; however, the angular deflection of any segment of the fabricated section shall not exceed 10 degrees.

735.4 MATERIALS:

Except when otherwise permitted by the Engineer, no materials other than water, Portland cement, Pozzolanic materials, mineral aggregates and steel shall be used in the manufacturing of the pipe~~, conforming to ASTM C76,~~ with the following exceptions:

Comment [RTH1]: This belongs in the installation specification (section 618) not in the pipe material specification. Therefor it has been moved to section 618.1 and deleted from this specification.

Comment [RTH2]: Moved to Section 618. Since coordination and submittal of the pipe line layout drawings is the responsibility of the construction contractor.

Comment [RTH3]: Section 618.3 paragraph 7 requires all RCP installed under Permit to be Class III or stronger therefore the first sentence is deleted. Also since this is an engineering design requirement and not a pipe material specification it should be deleted from this specification.

Comment [RTH4]: This belongs in the installation specification (section 618.1) not in the pipe material specification. Therefor it has been moved to section 618.1 and deleted from this specification.

(A) Portland Cement: Portland cement shall comply with ASTM C150, Type II, and low alkali. The pipe manufacturer shall supply a cement mill certificate in triplicate for each load of cement delivered, showing the specification, type, chemical analysis, and quantity. In lieu of the above, on stockpiled pipe the manufacturer shall certify that the type of cement used meets ~~-~~this specification. The pipe manufacturer shall also certify in writing that the cement content of the concrete complies with the specifications as to yield per cubic yard of concrete poured.

(B) Concrete Admixtures: The pipe manufacturer shall certify in writing that no calcium chloride or admixture containing calcium chloride has been used in the manufacture of the pipe. Other admixtures may be used if approved by the Engineer. The pipe manufacturer shall certify to the brand and chemical content of such admixtures used.

(C) Steel Reinforcement: The pipe manufacturer shall supply three copies of mill certificates showing heat numbers, chemical analysis, and physical tests on reinforcing steel. In lieu of the above, on stockpiled pipe the manufacturer shall certify that the type of steel used meets this specification~~. The number of steel wraps shall not be less than 5 percent below that shown on the shop drawing for any one pipe~~.

Comment [RTH5]: Shop drawings for pipe fabrication is not required therefor this should be deleted.

(D) Rubber gaskets shall be in accordance with ASTM C443.

735.5 MANUFACTURER'S QUALIFICATIONS AND EQUIPMENT REQUIREMENTS:

The manufacturer shall be competent to manufacture the type, size and quality of pipe; in addition, the manufacturer shall have satisfactory curing and storage facilities, and satisfactory financial resources.

Calibration of Cement and Aggregate Scales: The pipe manufacturer shall make whatever alterations are necessary to his equipment to enable the Contracting Agency's Sealer or State Inspector of Weights and Measures to check, calibrate, and seal the aggregate and cement scales used in the pipe production.

735.6 CURING OF PIPE:

(A) Steam Curing: The manufacturer shall provide adequate steam plant, piping, enclosures, and other facilities for curing the pipe. The enclosures shall be such that the temperature is maintained continuously between 110 and 150°F.

(B) Curing of the pipe shall not commence until the concrete has attained its initial set, but in any event not sooner than 1 hour and no later than 8 hours after placing of the concrete. Rate of rise of temperature shall not exceed 30°F per hour.

(C) Water Curing: The pipe shall be kept moist during daylight hours. The pipe, including the ends, shall be covered with burlap for the first 3 days, except that, if the pipe is kept constantly and completely wet with fog sprays during the daylight hours, the burlap covering may be omitted. If the manufacturer fails to proceed immediately with the required water curing, ~~he shall seal~~ the surfaces of the concrete~~,~~ except joint surfaces that are to be grouted~~,~~ shall be sealed with an approved~~,~~ white pigmented sealing compound in accordance with Section 726.

735.7 TESTS AND ACCEPTANCE:

(A) Basis of Acceptance: The basis of acceptance for the reinforced concrete pipe shall be in accordance with ASTM C76, ASTM C506, or ASTM C507, as applicable, including ~~by~~ the method stated in the special provision and as amended herein. However, the purchaser may, at his option, make concrete cylinder tests for the purpose of determining release dates for shipment of the pipe and for his information in regard to general quality of the concrete.

(B) Segregation of Material: The slump of the concrete mix shall not exceed 4 inches so as to preclude excessive segregation of the materials used and shall be proportioned so that the result shall be a homogeneous concrete mixture of such quality that the pipe will conform to the tests and design requirements of these specifications.

(C) A pipe has failed the D-load test when the opening crack exceeds .01 inch for a distance of 1 foot when measured at close intervals. These measurements are taken within the 1 foot measured span only when the crack line is more or less parallel to the axis of the pipe, as it is obvious that where the crack deviates substantially from parallel, and approaches a direction normal to the axis, that the edges of the crack tend to slip past each other, instead of opening up under load. The intent of the test is to measure the crack opening under stress.

(D) Porous or honeycomb concrete areas 6 inches or less in diameter may be removed and repaired. Pipe having defects or repairs greater than 6 inches in diameter will not be accepted.

(E) Any crack exceeding 1 foot in length that goes completely through the pipe, is not considered acceptable whether repaired or not, except that a single end crack that does not exceed the depth of the joint as measured from the end to the inside shoulder is acceptable.

(F) Any crack that is .01 inch in width for one-sixteenth inch in depth or deeper, for a length of 1 foot or more and continues as a hairline crack down to the reinforcing steel for over 1/2 the length of the pipe is not considered acceptable whether repaired or not.

(G) A single continuous hairline crack which does not extend to the reinforcing steel and not in excess of .01 inch in width for a distance of 1 foot is acceptable without repair. This type of crack, longer than 1 foot shall be repaired.

(H) Repairs shall be made by filling the defect with epoxy under pressure or by chipping out a V-Section to the full depth of the defect and repairing with an approved patching compound. The composition of the patching compound shall be furnished to the Engineer for approval.

(I) The words regarding acceptability and repair ability in the above paragraphs shall also apply when the crack occurs after loading of the pipe in the trench with backfill. Cracks wider than .01 inch shall be assumed to indicate overstress of the steel. In such case, the defective portion of the installation shall be replaced or repaired in a manner acceptable to the Engineer. After structural repairs are completed, the remaining cracks shall be filled as required above. All corrective measures shall be at the expense of the Contractor.

(J) Blisters: All pipe joints having blisters involving less than 1/4 the interior surface area shall be repaired by removing all loose material and exposing all hollow area and replacing with fresh concrete properly bonded, with an acceptable bonding agent, and curing the repair with membrane coating. Blisters with larger areas are not considered to be repairable or acceptable.

(K) Painting of pipe, or portion of pipe, with grout to cover defects, minor or major, will not be permitted until approved by the Engineer.

(L) Where the modified or special design method, under the ASTM Standard ~~C76~~ is elected, acceptance on the basis of material tests and inspection of manufactured pipe for defects and imperfections shall be as stated in the ASTM ~~C76~~ Standard, and as amended herein. However, one joint of each size and D-load shall be selected by the Engineer for test purposes, and shall be tested for strength by the 3 edge bearing method, ASTM C497, with the results being used for confirmation of the submitted design for this D-load. If the pipe section tested fails in compression or shear before reaching the D-load specified, the test shall be considered a failure. Additional sections of the same diameter size and class shall be tested as specified above until the load requirements are met for the D-load strength. This test procedure shall be accomplished only once per manufacture regardless of the number of contractors he supplies. Placing of reinforcing steel in the test section of pipe to control shear cracks will not be permitted.

Requirements regarding defects shall be the same as stated above for standard pipe.

Concrete test requirements specified under compression tests of the ASTM ~~C76~~ Standard shall be amended in part to read as follows: "The average of any 5 consecutive strength tests of the laboratory-cured specimens shall be equal to or greater than the specified strength set forth in the design strength requirements ~~T~~table~~s III, IV, or V~~ for the type and class of pipe being produced, and not more than 20 percent of the strength tests shall have values less than the specified strength. If more than 20 percent have values less than the specified strength, the lot represented shall be considered to be defective and not acceptable. In no case shall any cylinder tested fall below 80 percent of the specified design strength. If anyone cylinder falls below 80 percent of the specified design strength, then the entire production represented by that cylinder will not be accepted for purchase by the Contracting Agency unless the Contractor can demonstrate by coring to the satisfaction of the Engineer, that the cylinder in question is not representative of the entire production, or is representative of only a portion of the entire production."

During the fabrication of the pipe, concrete cylinders shall be made from a representative sample of the concrete. Concrete cylinders and slump tests shall be made by the Engineer or under his direct supervision. A set of cylinders shall consist of ~~three~~five. A minimum of one set shall be made for each day's production.

Comment [RTH6]: A minimum of five cylinders is required by each of the ASTM standards.

In vibrated and spun pipe, where the slump of the concrete approaches 0, the cylinders shall be made as follows:

Fill the cylinder can in 3 equal layers. Each layer shall be vibrated and assisted by rodding or other mechanical contrivance simultaneously until the moisture comes to the surface. Care shall be taken that the material is not over-vibrated which will cause segregation. When the moisture rises to the surface of the third layer, it is struck off and leveled. The cap is put on the cylinder and it is marked for identification. It shall then be steam cured in the same manner as the pipe, at the conclusion of which, the cylinders shall be brought into the laboratory for standard moist curing until the prescribed time for the compressive test.

The cylinders shall be made according to ASTM C31 where the pipe is manufactured with concrete that has enough slump for the material to be hand rodded. For reinforced concrete pipe made by the centrifugal method, the manufacturer may substitute centrifugally cast test cylinders for standard test cylinders. Centrifugally cast cylinders shall be made in accordance with AWWA C302 and cured in the same manner as normal test cylinders, except that the net area of the hollow cylinder will be used to determine the compressive strength.

~~**735.8 DOWNGRADING OF PIPE:**~~

~~For the purpose of these specifications, downgrade pipe shall be defined as pipe which is to be used under loads less than that for which they have been designed.~~

Comment [RTH7]: This section serves no purpose therefor I suggest that it be deleted.

735.9 SANITARY SEWER PIPE:

In addition to the above, sewer pipe shall meet the requirements of ASTM C76, reinforced concrete pipe having O-ring Rubber Gasket Joints with an interior lining of plastic liner plate in accordance with Section 741.

(A) Pipe Design: The wall thickness and the amount of circumferential reinforcement shall not be less than that required for the D-load indicated on the plans and required by the specifications. The calculations for wall thickness and amount of steel area per foot of pipe, having concrete lining, shall be for a pipe 2 inches larger in internal diameter than that specified on the plans. The additional concrete lining shall not be considered in the calculation for the area of steel required, nor in any of the load calculations.

D-load class of pipe and the date poured shall be plainly marked inside each pipe section. Specific approval must be obtained, prior to submitting a bid; to decrease the cover over the reinforcing steel at the joint should the steel interfere with the rubber gasket in the groove at the spigot end.

(B) Pipe Construction: Tamped or packer head pipe will not be allowed. Pipe having concrete lining shall have the internal diameters indicated on the plans, measured to the inside of the additional 1 inch of covering. The various sizes of pipe shall be centrifugally spun. Pipe having plastic liner plate shall be vibrocast to 1/2 inch tolerance to match the unlined pipe of the D-load indicated on the plans.

(C) Test and Acceptance: In addition to the statements above, any crack that goes completely through the pipe, regardless of length of crack is not considered acceptable whether repaired or not, except that a single end crack that does not exceed the depth of the joint as measured from the end to the inside shoulder is acceptable.

735.10 ACCEPTANCE MARK:

The Engineer may, at the place of manufacturer, indicate his acceptance of the pipe for delivery to the job by marking the pipe with the Contracting Agency's mark. Such acceptance, however, shall not be considered a final acceptance.

If the pipe is subsequently rejected, the mark placed thereon by the Engineer shall be defaced.

- End of Section -

REINFORCED CONCRETE PIPE

735.1 GENERAL:

These specifications cover reinforced concrete pipe and related structures intended to be used for conveyance of sewage, industrial waste, and storm and irrigation water.

Except as modified herein reinforced concrete pipe shall be manufactured and tested in conformance with the requirements of ASTM C76 for circular pipe, ASTM C506 for arch pipe, and ASTM C507 for elliptical pipe.

Whatever struts or other protective methods proved necessary to furnish and install the pipe to meet the limitation of cracks as specified herein, shall be provided and maintained throughout pipe handling and transportation.

735.2 BELL JOINT REINFORCEMENT:

All reinforced concrete pipes less than 36 inch inside diameter and the same approximate equivalent size shall include an area of reinforcing steel in the bell not less than the area required for the circumferential reinforcement in the wall of the pipe.

735.3 CURVES, BENDS AND CLOSURES:

Horizontal and vertical long-radius curves shall be formed by bevel adapters or by beveling the straight pipe joint. The bevel of the pipe shall not exceed 5 degrees and the total angular deflection, for beveled pipe, shall not exceed 10 degrees. Small angular changes may be made with straight pipe provided that the joint opening does not exceed 3/4 inch. Short radius curves and closures shall be formed with fabricated specials; however, the angular deflection of any segment of the fabricated section shall not exceed 10 degrees.

735.4 MATERIALS:

Except when otherwise permitted by the Engineer, no materials other than water, Portland cement, Pozzolanic materials, mineral aggregates and steel shall be used in the manufacturing of the pipe with the following exceptions:

(A) Portland Cement: Portland cement shall comply with ASTM C150, Type II, and low alkali. The pipe manufacturer shall supply a cement mill certificate in triplicate for each load of cement delivered, showing the specification, type, chemical analysis, and quantity. In lieu of the above, on stockpiled pipe the manufacturer shall certify that the type of cement used meets this specification. The pipe manufacturer shall also certify in writing that the cement content of the concrete complies with the specifications as to yield per cubic yard of concrete poured.

(B) Concrete Admixtures: The pipe manufacturer shall certify in writing that no calcium chloride or admixture containing calcium chloride has been used in the manufacture of the pipe. Other admixtures may be used if approved by the Engineer. The pipe manufacturer shall certify to the brand and chemical content of such admixtures used.

(C) Steel Reinforcement: The pipe manufacturer shall supply three copies of mill certificates showing heat numbers, chemical analysis, and physical tests on reinforcing steel. In lieu of the above, on stockpiled pipe the manufacturer shall certify that the type of steel used meets this specification.

(D) Rubber gaskets shall be in accordance with ASTM C443.

735.5 MANUFACTURER'S QUALIFICATIONS AND EQUIPMENT REQUIREMENTS:

The manufacturer shall be competent to manufacture the type, size and quality of pipe; in addition, the manufacturer shall have satisfactory curing and storage facilities, and satisfactory financial resources.

Calibration of Cement and Aggregate Scales: The pipe manufacturer shall make whatever alterations are necessary to his equipment to enable the Contracting Agency's Sealer or State Inspector of Weights and Measures to check, calibrate, and seal the aggregate and cement scales used in the pipe production.

735.6 CURING OF PIPE:

(A) Steam Curing: The manufacturer shall provide adequate steam plant, piping, enclosures, and other facilities for curing the pipe. The enclosures shall be such that the temperature is maintained continuously between 110 and 150°F.

(B) Curing of the pipe shall not commence until the concrete has attained its initial set, but in any event not sooner than 1 hour and no later than 8 hours after placing of the concrete. Rate of rise of temperature shall not exceed 30°F per hour.

(C) Water Curing: The pipe shall be kept moist during daylight hours. The pipe, including the ends, shall be covered with burlap for the first 3 days, except that, if the pipe is kept constantly and completely wet with fog sprays during the daylight hours, the burlap covering may be omitted. If the manufacturer fails to proceed immediately with the required water curing, the surfaces of the concrete except joint surfaces that are to be grouted shall be sealed with an approved white pigmented sealing compound in accordance with Section 726.

735.7 TESTS AND ACCEPTANCE:

(A) Basis of Acceptance: The basis of acceptance for the reinforced concrete pipe shall be in accordance with ASTM C76, ASTM C506, or ASTM C507, as applicable, including the method stated in the special provision and as amended herein. However, the purchaser may, at his option, make concrete cylinder tests for the purpose of determining release dates for shipment of the pipe and for his information in regard to general quality of the concrete.

(B) Segregation of Material: The slump of the concrete mix shall not exceed 4 inches so as to preclude excessive segregation of the materials used and shall be proportioned so that the result shall be a homogeneous concrete mixture of such quality that the pipe will conform to the tests and design requirements of these specifications.

(C) A pipe has failed the D-load test when the opening crack exceeds .01 inch for a distance of 1 foot when measured at close intervals. These measurements are taken within the 1 foot measured span only when the crack line is more or less parallel to the axis of the pipe, as it is obvious that where the crack deviates substantially from parallel, and approaches a direction normal to the axis, that the edges of the crack tend to slip past each other, instead of opening up under load. The intent of the test is to measure the crack opening under stress.

(D) Porous or honeycomb concrete areas 6 inches or less in diameter may be removed and repaired. Pipe having defects or repairs greater than 6 inches in diameter will not be accepted.

(E) Any crack exceeding 1 foot in length that goes completely through the pipe, is not considered acceptable whether repaired or not, except that a single end crack that does not exceed the depth of the joint as measured from the end to the inside shoulder is acceptable.

(F) Any crack that is .01 inch in width for one-sixteenth inch in depth or deeper, for a length of 1 foot or more and continues as a hairline crack down to the reinforcing steel for over 1/2 the length of the pipe is not considered acceptable whether repaired or not.

(G) A single continuous hairline crack which does not extend to the reinforcing steel and not in excess of .01 inch in width for a distance of 1 foot is acceptable without repair. This type of crack, longer than 1 foot shall be repaired.

(H) Repairs shall be made by filling the defect with epoxy under pressure or by chipping out a V-Section to the full depth of the defect and repairing with an approved patching compound. The composition of the patching compound shall be furnished to the Engineer for approval.

(I) The words regarding acceptability and repair ability in the above paragraphs shall also apply when the crack occurs after loading of the pipe in the trench with backfill. Cracks wider than .01 inch shall be assumed to indicate overstress of the steel. In such case, the defective portion of the installation shall be replaced or repaired in a manner acceptable to the Engineer. After structural repairs are completed, the remaining cracks shall be filled as required above. All corrective measures shall be at the expense of the Contractor.

(J) Blisters: All pipe joints having blisters involving less than 1/4 the interior surface area shall be repaired by removing all loose material and exposing all hollow area and replacing with fresh concrete properly bonded, with an

acceptable bonding agent, and curing the repair with membrane coating. Blisters with larger areas are not considered to be repairable or acceptable.

(K) Painting of pipe, or portion of pipe, with grout to cover defects, minor or major, will not be permitted until approved by the Engineer.

(L) Where the modified or special design method, under the ASTM Standard is elected, acceptance on the basis of material tests and inspection of manufactured pipe for defects and imperfections shall be as stated in the ASTM Standard, and as amended herein. However, one joint of each size and D-load shall be selected by the Engineer for test purposes, and shall be tested for strength by the 3 edge bearing method, ASTM C497, with the results being used for confirmation of the submitted design for this D-load. If the pipe section tested fails in compression or shear before reaching the D-load specified, the test shall be considered a failure. Additional sections of the same diameter size and class shall be tested as specified above until the load requirements are met for the D-load strength. This test procedure shall be accomplished only once per manufacture regardless of the number of contractors he supplies. Placing of reinforcing steel in the test section of pipe to control shear cracks will not be permitted.

Requirements regarding defects shall be the same as stated above for standard pipe.

Concrete test requirements specified under compression tests of the ASTM Standard shall be amended in part to read as follows: "The average of any 5 consecutive strength tests of the laboratory-cured specimens shall be equal to or greater than the specified strength set forth in the design strength requirements table for the type and class of pipe being produced, and not more than 20 percent of the strength tests shall have values less than the specified strength. If more than 20 percent have values less than the specified strength, the lot represented shall be considered to be defective and not acceptable. In no case shall any cylinder tested fall below 80 percent of the specified design strength. If anyone cylinder falls below 80 percent of the specified design strength, then the entire production represented by that cylinder will not be accepted for purchase by the Contracting Agency unless the Contractor can demonstrate by coring to the satisfaction of the Engineer, that the cylinder in question is not representative of the entire production, or is representative of only a portion of the entire production."

During the fabrication of the pipe, concrete cylinders shall be made from a representative sample of the concrete. Concrete cylinders and slump tests shall be made by the Engineer or under his direct supervision. A set of cylinders shall consist of five. A minimum of one set shall be made for each day's production.

In vibrated and spun pipe, where the slump of the concrete approaches 0, the cylinders shall be made as follows:

Fill the cylinder can in 3 equal layers. Each layer shall be vibrated and assisted by rodding or other mechanical contrivance simultaneously until the moisture comes to the surface. Care shall be taken that the material is not over-vibrated which will cause segregation. When the moisture rises to the surface of the third layer, it is struck off and leveled. The cap is put on the cylinder and it is marked for identification. It shall then be steam cured in the same manner as the pipe, at the conclusion of which, the cylinders shall be brought into the laboratory for standard moist curing until the prescribed time for the compressive test.

The cylinders shall be made according to ASTM C31 where the pipe is manufactured with concrete that has enough slump for the material to be hand rodded. For reinforced concrete pipe made by the centrifugal method, the manufacturer may substitute centrifugally cast test cylinders for standard test cylinders. Centrifugally cast cylinders shall be made in accordance with AWWA C302 and cured in the same manner as normal test cylinders, except that the net area of the hollow cylinder will be used to determine the compressive strength.

735.9 SANITARY SEWER PIPE:

In addition to the above, sewer pipe shall meet the requirements of ASTM C76, reinforced concrete pipe having O-ring Rubber Gasket Joints with an interior lining of plastic liner plate in accordance with Section 741.

(A) Pipe Design: The wall thickness and the amount of circumferential reinforcement shall not be less than that required for the D-load indicated on the plans and required by the specifications. The calculations for wall thickness and amount of steel area per foot of pipe, having concrete lining, shall be for a pipe 2 inches larger in internal diameter than that specified on the plans. The additional concrete lining shall not be considered in the calculation for the area of steel required, nor in any of the load calculations.

D-load class of pipe and the date poured shall be plainly marked inside each pipe section. Specific approval must be obtained, prior to submitting a bid; to decrease the cover over the reinforcing steel at the joint should the steel interfere with the rubber gasket in the groove at the spigot end.

(B) Pipe Construction: Tamped or packer head pipe will not be allowed. Pipe having concrete lining shall have the internal diameters indicated on the plans, measured to the inside of the additional 1 inch of covering. The various sizes of pipe shall be centrifugally spun. Pipe having plastic liner plate shall be vibrocast to 1/2 inch tolerance to match the unlined pipe of the D-load indicated on the plans.

(C) Test and Acceptance: In addition to the statements above, any crack that goes completely through the pipe, regardless of length of crack is not considered acceptable whether repaired or not, except that a single end crack that does not exceed the depth of the joint as measured from the end to the inside shoulder is acceptable.

735.10 ACCEPTANCE MARK:

The Engineer may, at the place of manufacturer, indicate his acceptance of the pipe for delivery to the job by marking the pipe with the Contracting Agency's mark. Such acceptance, however, shall not be considered a final acceptance.

If the pipe is subsequently rejected, the mark placed thereon by the Engineer shall be defaced.

- End of Section -

SECTION 618

STORM DRAIN CONSTRUCTION

618.1 DESCRIPTION:

The size, type, and minimum strength of storm drain pipe shall be as shown on the plans, or as specified. Pipe stronger than that specified may be furnished at the Contractor's option and at no additional cost to the Contracting Agency.

Comment [RTH1]: Moved from section 735.1(D)

This section covers the installation of reinforced concrete pipe (RCP) ~~line~~ and high density polyethylene (HDPE) pipe ~~line construction~~ used for the conveyance of irrigation water and storm drainage in streets, easements, and alley right of ways, under low hydrostatic heads. Section 620 identifies the installation requirements for cast-in-place concrete pipe (CIPP).

Installation of pipe in laterals of Salt River Valley Water Users' Association or other irrigation districts shall conform to the specifications and permit of the respective irrigation district.

Installation of pipe in State Highways shall conform to the specifications and permit of the Arizona Department of Transportation.

When specified in the special provisions pipe line layout drawings shall be furnished to the Engineer prior to the manufacture of the concrete pipe. Catch basin connector pipe need not be included in the pipe line layout; however, special prefabricated pipe connections to the main line shall be included. In lieu of including catch basin connector pipe in the pipe layout, a list of catch basin connector pipes shall accompany the layout. The connector pipe list shall contain the following information.

(A) Size and Class of pipe.

(B) Station at which pipe joins main line.

(C) Number of section of pipe, length of section, type of sections (straight, horizontal bevel, vertical bevel, etc.).

The pipe layouts will be used by the Contracting Agency for reference only, but their use shall in no way relieve the Contractor of the responsibility for the correctness of the layout.

Comment [RTH2]: Moved from section 735.1 and modified.

618.2 MATERIALS:

~~All pipe. f~~For permit construction~~, shall be~~ reinforced concrete pipe strength shall be equal to or higher than~~, ASTM C76~~ Class III, A-III, HE-III, or VE-III. ~~or~~ HDPE pipe shall be in accordance with ASTM F894, AASHTO 252 or AASHTO 294. For reinforced concrete pipe, the minimum cover from the top of the pipe to the finished grade shall be 2 feet and the maximum cover shall be 12 feet. The minimum and maximum cover for HDPE pipe shall be as specified in the special provisions or the manufacturer's recommendations.

All pipes installed under railroad tracks shall be reinforced concrete pipe, ASTM C76, Class V and the minimum cover over all pipes shall be as specified in the railroad permit and/or special provisions. Bedding shall be in accordance with standard details.

Comment [RTH3]: Moved from section 618.3.

The ~~concrete pipe~~ RCP and HDPE pipe, specials, joints, gaskets, and testing shall be according to Section~~s 620 or~~ 735~~,~~ or ~~736 and~~ 738, except as specified below or as modified by special provisions.

Comment [RTH4]: Deleted section 736 since it is the specification for non-reinforced concrete pipe. The above paragraphs moved from section 618.3 require RCP.

(A) Specials: Pipe specials such as closure pieces, wyes, tees, bends, and manhole shafts shall be provided as indicated on the plans, and such specials shall be made equal in strength, diameter, and other physical characteristics to the standard straight pipe lengths by the use of extra concrete, extra reinforcing, or steel items. Drawings of specials shall be submitted to the Engineer for approval before their fabrication.

(B) Rubber Gasket Joints: When rubber gasket pipe is used, the joint shall be sealed with a continuous ring gasket made of a special composition rubber of such size and cross-section as to fill the annular space provided for it. The gasket shall be

the sole element depended upon to make the joint watertight, and shall have smooth surfaces, free from pits, blisters, porosity, and other imperfections.

(1) Rubber Gaskets for RCP shall be in accordance with ASTM C443 or AASHTO M-315.

(2) Rubber Gaskets for HDPE pipe shall be in accordance with Subsection 738.2.3.

(C) Water Stops: Water stops will be required when connecting HDPE pipe to concrete structures, manholes, etc. The water stop shall comply with Section 738 and will be installed per manufacturer recommendations.

(D) Cement Mortar Joints for RCP will be in accordance with Subsection 736.3.

618.3 CONSTRUCTION METHODS:

Excavation, bedding, backfilling, and compaction or consolidation of backfill and bedding of trenches shall be accomplished in accordance with Sections 601 and 603 for HDPE pipe, except as specified below, or as modified by special provisions.

The Contractor shall over-excavate the trench and fill with select materials in accordance with standard details.

Where the cover over the top of the pipe is less than 10 feet, the maximum trench width is unrestricted. The pay width, however, for pavement replacement shall remain in accordance with Section 336. For pipe, with 10 feet or more cover, the maximum trench width shall be as required by Sections 601 and 603 for HDPE pipe.

The laying of the pipe shall be in finished trenches free from water or debris, and shall be commenced at the lowest point, with the spigot ends pointing in the direction of the flow. Each pipe shall be laid firmly and true to line and grade, in such manner as to form a close concentric joint with the adjoining pipe and to prevent sudden off-sets of the flowline. Any adjustment to line and grade shall be made by scraping away or filling in under the body of the pipe, never by wedging or blocking under the pipe ends.

Variation from prescribed alignment and grade shall not exceed 0.10 foot and the rate of departure from or return to established grade or alignment shall be no more than 1 inch in 10 feet of pipe line unless otherwise approved by the Engineer. For closures and deflection angles greater than 10 degrees, joints shall be made by use of a bend, specially manufactured fitting, or by a concrete collar, per standard details. Pipe shall be of the type, class and size shown on the plans or in the special provisions.

~~All pipe, for permit construction, shall be reinforced concrete pipe, ASTM C76 Class III or HDPE pipe in accordance with ASTM F894, AASHTO 252 or AASHTO 294. For reinforced concrete pipe, the minimum cover from the top of the pipe to the finished grade shall be 2 feet and the maximum cover shall be 12 feet. The minimum and maximum cover for HDPE pipe shall be as specified in the special provisions or the manufacturer's recommendations.~~

~~All pipes installed under railroad tracks shall be reinforced concrete pipe, ASTM C76, Class V and the minimum cover over all pipes shall be as specified in the railroad permit and/or special provisions. Bedding shall be in accordance with standard details.~~

The allowable water loss for irrigation lines shall not exceed 2 gallons per hour per 100 feet of pipe per inch of diameter of pipe, under a minimum test head of 1 foot above the top of the pipe at the upper end when tested in accordance with the procedures of Section 615.

618.4 JACKING PIPE:

At locations where jacking is required, the storm drain line shall be installed by jacking to the lengths indicated on the plans, in accordance with the following. The methods and equipment used in jacking reinforced concrete pipe conduit shall be optional with the Contractor, provided that the proposed method is first approved in writing by the Engineer. Such approval, however, shall in no way relieve the Contractor of the responsibility for damages of any nature which might occur as a result of the methods used.

Only workmen experienced in the operation of jacking concrete conduit shall be used.

The driving ends of the conduit shall be properly protected and the conduit shall be driven true to alignment and grade. The deviation from true line and grade at any single point within the jacked portion shall be limited to 0.5 feet horizontal deviation from line and ±0.2 feet vertical deviation from grade.

Any section of conduit which may show signs of failure shall be removed and replaced with a new section of precast conduit or with a cast-in-place section, which in the opinion of the Engineer is adequate to carry the loads imposed upon it. In this respect it shall be understood that where pipe is specified on the drawings to be jacked into place the jacked pipe shall be reinforced concrete of the strength specified in these specifications and the design of such pipe is based upon superimposed loads and not upon loads which may be placed upon the pipe as a result of jacking operation. Any increase in pipe strength required in order to withstand jacking loads shall be the responsibility of the Contractor. The reinforcing shall be circular and of either single or double cage design.

Spacer blocks shall be placed in the inside circular space which will allow sufficient width for point mortaring when jacking is completed and to equalize pressures during jacking. Three grout holes per 8-foot section of pipe shall be made during manufacturing.

Double rubber gaskets and band type joints shall be provided for 36 inches diameter and larger pipe.

One hole shall be made on the top midway between the ends. Two additional holes, each approximately 1.5 feet from each end and approximately midway between the springline and top on opposite sides shall be made.

Where the nature of the soil, or the structure under which the conduit is being jacked is such that, there is increased danger of a cave-in or damage to said structure, the method of jacking the conduit shall be as specified below.

The leading section of conduit shall be equipped with a jacking head securely anchored thereto to prevent any wobble or alignment variation during jacking operations. The length and details of the jacking head shall be subject to the written approval of the Engineer. Excavation shall be carried out entirely within the jacking head and no excavation in advance thereof will be permitted. Every effort shall be made to avoid any loss of earth outside of the jacking head. Excavated material shall be removed from the conduit as excavation progresses, and no accumulation of such material within the conduit will be permitted.

Upon completion of the jacking operations, all voids around the outside face of the conduit shall be filled by grouting through each of the previously constructed grout holes to the satisfaction of the Engineer. The grout shall be a mixture of one part cement to three parts sand and a mixture by volume.

Grouting equipment and material shall be on the job before jacking operations are started in order that grouting around the jacked conduit may be started immediately after the jacking operation. After grouting, the holes in the conduit shall be repaired to the satisfaction of the Engineer.

618.5 VIDEO INSPECTION OF NEW MAINLINE STORM DRAINS:

The Contractor shall provide the Engineer with an annotated video inspection record (either VHS or DVD format) of the new mainline storm drain pipeline. The video shall clearly show all joints, seals, connecting pipes, and manholes. This video shall be provided to the Engineer, and reviewed and approved by the Engineer prior to the Contractor being allowed to place the final pavement over the storm drain line. No separate payment will be made for this inspection; the cost of the video inspection shall be included in the cost of the pipe.

618.6 MEASUREMENT:

(A) Main Line Pipe: Shall be the number of linear feet of pipe laid as measured along the pipe axis.

Unless hereinafter modified, measurement shall extend through manholes when no change in pipe size occurs. When a change in pipe size occurs within a manhole, unless hereinafter modified, measurement for each size will be taken to the centerline of the manhole.

(B) Connecting Pipe: Shall be the number of linear feet of pipe installed, as measured along the pipe axis from a main line pipe, or a manhole, or a catch basin to a catch basin, or a plugged end, and shall include the portions of the connecting pipe embedded in the above structures.

(C) Jacked Pipe: Shall be made at the ground surface and shall be the number of linear feet of ground surface undisturbed by the cut and cover construction on either side of the jacked section.

618.7 PAYMENT:

(A) Main Line Pipe: Will be paid at the unit price bid per linear foot, to the nearest foot, for each size and type of pipe and shall be compensation in full for furnishing and installing the type of pipe as specified and as shown on the plans including removal of obstructions, excavation, bedding, backfilling, compacting, testing, joint materials, joining, collars, and field closures.

(B) Connecting Pipe: Will be paid at the unit price bid per linear foot, to the nearest foot for each size of pipe and shall be compensation in full for furnishing and installing complete in place as shown on the plans and as specified, the connecting pipe and specials including spur connections, removal of obstructions, excavation, bedding, backfilling, compacting, joint materials, joining, collars, field closures, and testing.

(C) Jacked Pipe: Will be paid the same as for main line pipe.

- End of Section -

SECTION 607

TRENCHLESS INSTALLATION OF SMOOTH WALL JACKING PIPE

607.1 DESCRIPTION:

The Contractor shall furnish all labor, material and equipment as required for the trenchless operation for the installation of thirty-inch inside diameter (30" ID) and larger, tongue and groove smooth wall jacking pipe installed by horizontal earth pipe jacking or hand tunneling.

607.2 MATERIALS:

The jacking pipe shall be tongue and groove smooth wall reinforced concrete pipe ASTM C76 class V, vitrified clay pipe ASTM C1208, centrifugally cast fiberglass reinforced polymer mortar pipe, ASTM D3262.

607.3 TRENCHLESS OPERATION:

Before starting operations, the Contractor shall submit in accordance with Section 105.2, detailed shop drawing of the bore pit and receiving pit shoring, the jacking pipe, bulkheads, installation method, and the annular grouting mix design and grouting method. The proposed installation method and equipment shall be at the Contractor's option, no field construction shall commence until the proposed installation method is approved in writing by the Engineer. The Engineer's approval shall in no way relieve the Contractor of the responsibility for damages of any nature which might occur as a result of the methods used.

The bore and reception pits for the trenchless operation shall be shored to safeguard existing sub-structures and surface improvements against ground movement.

The leading section of jacking pipe shall be equipped with a tunnel shield. Excavation shall be carried out entirely within the tunnel shield and no excavation in advance thereof will be permitted. Every effort shall be made to avoid any loss of earth outside of the tunnel shield. Excavated material shall be removed from the jacking pipe as excavation progresses.

Upon completion of the jacking operation and if the grade of the jacking pipe is acceptable, all voids around the outside of the pipe shall be filled with grout.

607.4 DEWATERING:

All water encountered during the trenchless operation shall be disposed of by the Contractor in a manner that will not damage public or private property or create a nuisance or health problem. The cost of furnishing pumps, pipes and equipment for dewatering shall be considered incidental to the work and no additional payment shall be made.

607.5 MEASUREMENT AND PAYMENT:

Measurement for jacking pipe shall be the number of horizontal linear feet from the end of jacking pipe in the bore pit to the end of jacking pipe in the reception pit.

Payment for jacking pipe shall be full compensation for furnishing all labor, material, tools, and equipment required for the trenchless installation of the jacking pipe, complete in place including but not limited to shop drawings, dewatering, jacking pipe, bulkhead placement, grouting, and the excavation and backfilling of pits.

When a Contractor has the option of jacking and/or boring or open cut construction, and elects to construct a pipeline by the jacking and/or boring method, he will be paid for the replacement of such items of work as pavements, curb and gutter, sidewalk, driveway and alley entrances, as allowed for by open cut construction.

- End of Section –

MARICOPA COUNTY
Department of Transportation

MEMORANDUM

Date: March 24, 2014

To: MAG Specifications and Details Committee

From: Robert Herz, MCDOT Representative

Subject: Revision to Section 726 CONCRETE CURING MATERIALS **Case 14-09**

PURPOSE: Replace AASHTO references discontinued in 2010 with current ASTM standards.

REVISION: Replace AASHTO M 171 with ASTM C171 and replace AASHTO M 148 with ASTM C309.

SECTION 726

CONCRETE CURING MATERIALS

726.1 GENERAL:

Curing materials shall consist of waterproof paper, polyethylene film or liquid membrane-forming compounds which, when applied to fresh concrete, will inhibit moisture loss and reduce temperature rise during the curing period. All curing materials and methods shall be approved by the Engineer prior to use. Wet coverings such as burlap, cotton mats, or other moisture-retaining fabrics also may be used, or may be required by special provisions.

726.2 MATERIALS:

(A) Waterproof paper, or polyethylene film, shall conform ~~with~~to ~~AASHTO M 171~~ ASTM C171.

(B) Liquid membrane-forming compounds shall conform ~~with~~to ~~AASHTO M 148~~ ASTM C309. Type 1 compound with either a Class A or Class B vehicle shall be used for concrete structures, except bridge decks, approach slabs, and portland cement concrete pavement. Type 2 white pigmented compound, with either a Class A or Class B vehicle shall be used for ~~P~~portland cement concrete pavement, bridge decks and approach slabs.

(C) Burlap cloth made from jute or kenaf shall conform to AASHTO M-182.

- End of Section -

2901 West Durango Street Phoenix, Arizona 85009 Phone: 602-506-4760 Fax: 602-506-5969

SECTION 321

PLACEMENT AND CONSTRUCTION OF ASPHALT CONCRETE PAVEMENT

321.1 DESCRIPTION:

This section is to provide specifications for furnishing all materials, mixing at a plant, hauling and placing a mixture of aggregate materials, mineral admixture and asphalt binder to form a pavement course for placement upon a previously prepared base or sub base.

321.2 MATERIALS AND MANUFACTURE:

The materials shall conform to Section 710 for the type specified. The specific required mix type shall be called out in the contract documents or as directed by the Engineer. Warm Mix Asphalt (WMA) technologies may be used within the mixture ~~at the option of the contractor~~ provided all requirements of the specifications are met, and the technology is on the ADOT Approved Product list.

321.3 WEATHER AND MOISTURE CONDITIONS:

Asphalt concrete shall be placed only when the surface is dry, and when the atmospheric temperature in the shade is 40 degrees F. (50 degrees F for Asphalt Concrete lift less than 2 inch thick) or above. No asphalt concrete shall be placed when the weather is foggy or rainy, or when the base or sub base on which the material is to be placed is unstable. Asphalt concrete shall be placed only when the Engineer determines that weather conditions are suitable.

321.4 APPLICATION OF TACK COAT:

A tack coat shall be applied to all existing and to each new course of asphalt concrete prior to the placing of a succeeding lift of asphalt concrete. The tack coat may be deleted when a succeeding layer of asphalt concrete is being applied over a freshly laid course that has been subjected to very little traffic when approved by the Engineer.

The application of the tack coat shall comply with Section 329. The grade of emulsified asphalt shall be SS-1 h or CSS-1 h as specified in Section 713.

The same material that is specified above for the tack coat shall be applied to the vertical surfaces of existing pavements, curbs, and gutters, against which asphalt concrete is to be placed.

The surface to be covered may require repair or patching as directed by the Engineer. This shall be addressed in the project specifications prior to the bidding of the project.

321.5 MIX DESIGN

The mix design shall be submitted to the Engineer at least five working days prior to the start of asphalt concrete production. Mix designs provided by the agency may be utilized on projects at the Engineer's discretion. The Engineer will review and approve the mix design to assure it contains all of the required information as outlined in Section 710.3.1. If WMA technologies are used within the mix design, the type of WMA technology used ~~wi~~shall be indicated on the mix design. The target values for gradations, binder contents, and air voids will be established as the accepted Job Mix Formula (JMF) based upon the mix design. Mix designs not containing all of the information will be returned within five working days of receipt of all mix design information, for action and resubmission by the contractor.

Once the mix design has been approved by the agency and the mixing plant selected, the Contractor and/or his supplier shall not change plants nor utilize additional mixing plants without prior approval of the Engineer.

If the contractor elects to change its source of material, the contractor shall furnish the Engineer with a new mix design, which meets the requirements of Section 710, as amended by the Project Specifications.

The contractor may make self-directed target changes to the approved mix design within the limits shown below. Requests for self-directed target changes shall be made in writing and acknowledged by the Engineer prior to the start of production of a lot and will remain in effect until such time as any additional changes are implemented. The self-directed target changes must meet the contract requirements for mix design criteria and gradation limits.

TABLE 321-1 ALLOWABLE SELF-DIRECTED TARGET CHANGES	
MEASURED CHARACTERISTICS	ALLOWABLE SELF-DIRECTED TARGET CHANGES
Gradation (Sieve Size)	
3/8 inch	± 4% from mix design target value
No 8	± 4% from mix design target value
No 40	± 2% from mix design target value
No 200	+0.5% from mix design target value
Binder Content	± 0.2% from mix design target value
Effective Air Voids	None

The contractor may propose target changes, other than self-directed changes, to the approved mix design for the approval of the Engineer. The Engineer will determine if the proposed target change will result in mix production that meets the contract requirements for mix design criteria and gradation limits. The target changes will not be retroactive for the purpose of acceptance.

321.6 MIX PRODUCTION:

All materials shall be proportioned by weight in a hot mix asphalt plant in the proportions required by the mix design to provide a homogeneous and workable mass. Each hot mix asphalt plant shall be inspected in accordance with the provisions contained in the 'Hot Mix Asphalt Production Facilities' by the Arizona Rock Products Association and shall have a current inspection certificate. All measuring devices shall be calibrated at least annually by a technician licensed by the Arizona Bureau of Weights & Measures. Mixing plants shall conform to the requirements of AASHTO M-156, except as modified herein. If WMA technology is being used, any equipment associated with the production of hot mix asphalt shall calibrated and in proper working order according to the WMA equipment specifications. If there are any deviations in the production or compacting temperatures of the hot mix asphalt with WMA technology, the mix design shall state the differences.

In drum mix plants the mineral admixture shall be added and thoroughly mixed with the mineral aggregate by means of a mechanical mixing device prior to the mineral aggregate and mineral admixture entering the dryer. The moisture content of the combined mineral aggregate shall be a minimum of three percent by weight of the aggregate during the mixing process.

For drum-mix plants, the mineral admixture shall be weighed across a weight belt, or other approved alternative weighing system, with a weight totalizer prior to entry into the mechanical mixing device. The mechanical mixing device shall be a pugmill type mixer that is in good working condition. The rate of the aggregate feed shall not exceed the mixing device's capacity in ton per hour. The mixer shall be constructed to minimize the loss of mineral admixture and shall be located in the aggregate delivery system at a location where the mixed material can be readily inspected. The mixing device shall be capable of effective mixing in the full range of the asphalt concrete production rates.

The hot plant and equipment shall be constructed and operated to prevent loss of mineral admixture through the dust collection system of the plant.

A positive signal system shall be provided and utilized during production whereby the mixing shall automatically be stopped if the mineral admixture is not introduced into the mineral aggregate. The plant will not be permitted to operate unless the signal system is in good working condition.

The introduction of bituminous material shall be controlled by an automated system fully integrated with the controls or the mineral aggregate and mineral admixture. The production of the plant shall be controlled by the rate required to obtain a uniform mixture of all components. Drying and heating shall be accomplished in such a manner as to preclude the mineral admixture from becoming coated with un-spent fuel. The completed asphalt concrete may be held in storage for up to 12 hours in insulated or heated silos, providing the minimum temperature noted herein for placement and compaction is met behind the placement device. If the Engineer determines that there is an excessive amount of heat, heat loss, drain down, segregation and/or oxidation of the mixture due to temporary storage, use of surge bins or storage bins will be discontinued.

The temperature of the asphalt concrete, with unmodified binders, upon discharge from the mixer shall not exceed 335 degrees F. The discharge temperature may be increased on the recommendation of the binder supplier, when approved by the Engineer. If the asphalt concrete is discharged from the mixer into a hopper, the hopper shall be constructed so that segregation of the asphalt concrete will be minimized.

321.7 TRANSPORTATION:

Petroleum distillates or other substances that will have a detrimental effect on the asphalt concrete shall not be used as a release agent.

The beds of all transportation units shall be clean and smooth to allow the free flow of material into the paving machine's hopper.

Tarpaulins shall be furnished on all trucks and used when weather condition warrant, or if directed by the Engineer.

321.8 PLACEMENT:

321.8.1 Placing: All courses of asphalt concrete shall be placed and finished by means of a self-propelled paving machine equipped with an automatically actuated control system, except under certain conditions or at locations where the Engineer deems the use of a self-propelled paving machine impracticable.

The control system shall control the elevation of the screed at each end by controlling the elevation of one end directly and the other end indirectly either through controlling the transverse slope or alternatively when directed, by controlling the elevation of each end independently.

The control system shall be capable of working with one of the following devices:

(a) Ski or non-contact device of not less than 30 feet in length, supported throughout its entire length
(b) Taut stringline or wire set to grade
(c) Short ski or sonar sensing units from curb control
(d) Joint matching shoe

Failure of the control system to function properly shall be cause for the suspension of asphalt concrete production. In order to achieve a continuous operation, the speed of the paving machine shall be coordinated with the hot mix plant and transport units.

If the asphalt concrete is dumped from the hauling vehicles directly into the paving machine, care shall be taken to avoid jarring the machine or moving it out of alignment. No vertical load shall be exerted on the paving machine by the truck.

If asphalt concrete is dumped upon the surface being paved and subsequently loaded in the paving machine, the loading equipment shall be self-supporting and shall not exert any vertical load on the paving machine. Substantially all of the asphalt concrete shall be picked up and loaded into the paving machine.

Self-propelled paving machines shall spread the mixture without segregation or tearing, true to line, grade and crown indicated on the Project plans. Pavers shall be equipped with hoppers and augers that will distribute the mixture uniformly in front of an adjustable floating screed. The raising of the hopper wings must be minimized and the paving machine will not be operated when in an empty condition.

Screeds shall include any strike-off device operated by tamping or vibrating action which is effective, without tearing, shoving or gouging the mixture and which produces a course with a uniform texture and density for the full width being paved. Screeds shall be adjustable as to height and crown and shall be equipped with a controlled heating device for use when required. In the case of the screed, auger extensions and vibrators shall be installed wherever the screed is extended more than one (1) foot beyond the end of the base auger or auger extension. However, when placing material against an extremely uneven curb or edge over a short distance, the Engineer may waive the auger extensions and vibrators.

At any place not accessible to the roller, the mixture shall be thoroughly compacted with tampers to provide a uniform and smooth layer over the entire area compacted in this manner.

321.8.2 Joints: Transverse joints, before a surface course is placed in contact with a cold transverse construction joint, the cold existing asphalt concrete shall be trimmed to a vertical face for its full depth and exposing a fresh face. After placement and finishing the new asphalt concrete, both sides of the joint shall be dense and the joint shall be smooth and tight. The surface in the area of the joint shall not deviate more than 1/4 inch from a 12-foot straightedge, when tested with the straightedge placed across the joint, parallel to the centerline. Longitudinal Joints of each course shall be staggered a minimum of 6 inches with relation to the longitudinal joint of the immediate underlying course cold transverse construction joint, the cold existing asphalt concrete shall be trimmed to a vertical face for its full depth and exposing a fresh face. The fresh face shall be tacked prior to placement of the adjacent course. After placement and finishing the new asphalt concrete, both sides of the joint shall be dense and the joint shall be smooth and tight. The surface in the area of the joint shall not deviate more than ¼ inch from a 12-foot straightedge, when tested with the straightedge placed across the joint, parallel to the centerline. The joint will be tack coated if required by the Engineer.

321.8.3 Asphalt Leveling Course: A leveling course shall be used when specified, or as directed in writing by the Engineer, to bring existing pavement to a uniform grade prior to placing an overlay or other course. If a leveling course is being applied on an Asphalt surface, a tack coat shall be applied. The compaction requirements contained in Section 321.10 do not apply to leveling courses.

321.8.4 Compaction; Asphalt Base Course and Surface Course: It is the contractor's responsibility to perform any desired Quality Control monitoring and/or testing during compaction operations to achieve the required compaction. The temperature of the asphalt concrete immediately behind the laydown machine shall meet the minimum requirements of Table 321-2, unless WMA technology is being used. If WMA technology is being used then the minimum requirements will be stated within the mix design recommended by the WMA manufacturer. A probe type electronic thermometer with a current calibration sticker attached will be used to measure the temperature of the asphalt concrete mixture. When measuring the temperature of the mat, the probe shall be inserted at mid-depth and as horizontal as possible to the mat.

TABLE 321-2

MINIMUM ASPHALT CONCRETE PLACEMENT TEMPERATURE

Base (1) Temp (°F)	Mat Thickness (inches)					
	1/2	3/4	1	1 1/2	2	3 and greater
40 – 50	---	---	310	300	285	275
50 – 60	---	310	300	295	280	270
60 – 70	310	300	290	285	275	265
70 – 80	300	290	285	280	270	265
80 – 90	290	280	270	270	265	260
+90	280	275	265	265	260	255

(1) Base on which mix is to be placed

Asphalt compaction equipment shall be of sufficient size and weight to accomplish the required compaction. All compaction equipment shall be operated and maintained in accordance with the manufacturer's recommendations and the project requirements. During the rolling operation, the speed of the roller shall not exceed 3 miles per hour, unless otherwise approved by the Engineer.

Pneumatic tired compactors shall be equipped with skirt-type devices mounted around the tires so that the temperature of the tires will be maintained during the compaction process.

The Engineer will determine the acceptability of the pavement compaction in accordance with Section 321.10.

321.8.5 Smoothness: The completed surfacing shall be thoroughly compacted, smooth and true to grade and cross-section and free from ruts, humps, depressions or irregularities. An acceptable surface shall not vary more than one-fourth (¼) inch from the lower edge of a 12-foot straightedge when the straightedge is placed parallel to the centerline of the roadway.

321.8.6 Asphalt Concrete Overlay: Asphalt concrete overlay consists of the placing and compacting plant mix asphalt concrete over existing pavement. The mix design and thickness of the overlay shall be as shown on the plans or as specified in the special provisions.

Except when the existing asphalt surface is to be preheated and remixed, pavement surfaces shall be prepared as follows:

(a) Areas designated for pavement repair by the contract documents (which may include severely raveled areas, severely cracked areas, over-asphalted areas, and other defects) shall be cut out and replaced. Pavement repairs shall be completed and approved before placing asphalt concrete overlay.

(b) Before placing asphalt concrete overlay, milling shall be done as shown on the plans or specified in the special provisions and shall be in accordance with Section 317.

(c) After pavement repairs and milling have been completed the entire surface shall be cleaned with a power broom.

(d) After surfaces have been prepared to the satisfaction of the Engineer, they shall receive a tack coat per Section 321.4. Traffic will not be permitted to travel over surfaces which have received a tack coat, except when tack coat is applied to milled surfaces in compliance with Section 317.2 for dust control purposes. When the overlay is to extend onto a concrete gutter, the gutter shall be thoroughly cleaned of loose dust and cement particles and shall be tack coated.

Asphalt concrete overlay shall be placed as specified in Section 321.8.1 and compacted as specified in Section 321.8.4. The surface smoothness shall meet the tolerances specified in Section 321.8.5.

Frames and covers of manholes, survey monuments, valve boxes, clean-outs and other existing structures shall be adjusted in accordance with Section 345 to set flush with the finished surface of the new pavement. During adjustment if pavement or base materials are removed or disturbed, they shall be replaced with approved materials installed in a manner acceptable to the Engineer.

On roads without curb and gutter, the existing unpaved shoulder elevation shall be adjusted by the Contractor to match the elevation at the edge of the new overlay and slope away from the new pavement surface at a rate that the existing quantity of shoulder material will allow. Shoulder material shall be compacted to a minimum of 95% of maximum density, determined in accordance with Section 301.3. Shoulder adjustment to match the new pavement surface elevation shall not be measured. The cost of shoulder adjustment shall be included in the price paid for the asphalt concrete overlay or other related pay items. When the Engineer determines an insufficient amount of material is available for shoulder adjustment, the Engineer may require the Contractor to provide additional material. Acceptable material for shoulders includes the existing shoulder material, millings, untreated base materials, or a granular material approved by the Engineer. Engineer requested imported material for shoulder adjustment is not included in the price paid for the asphalt concrete overlay.

321.8.7 Pavement Fabric Interlayer: Pavement fabric interlayer shall be used only when specified on the plans or in the specifications.

Pavement fabric interlayer shall be in accordance with Table 796-1 and be the class designated on the plans or in the specifications.

Asphalt binder coat used to bond the fabric to the pavement shall be paving asphalt PG 70-10 asphalt cement conforming to the requirements of Section 711. The application and distributing equipment for the asphalt binder shall conform to the requirements of Section 330. The asphalt binder coat shall be uniformly spray applied to the prepared pavement surface at the rate of 0.20 gallons per square yard for Class B fabric or at the rate of 0.25 gallons per square yard for Class A fabric. Some underlying surfaces may require a higher or lower application rate. A test strip may be necessary to determine the proper application rate. The width of liquid asphalt cement application shall be the fabric width, plus six inches.

Neither the asphalt binder coat or fabric interlayer shall be placed when weather conditions, in the opinion of the Engineer, are not suitable. The asphalt binder and fabric interlayer shall only be placed when the pavement is dry, the ambient air temperature is 50 degrees F and rising, and pavement temperature is 40 degrees F and rising.

Equipment for placing the fabric shall be mechanized and capable of handling full rolls of fabric. The equipment shall be able to lay the fabric smoothly to maximize pavement contact and remove air bubbles. Stiff bristle brooms shall be used to smooth the fabric. The equipment used to place the fabric shall be in good working order and is subject to approval by the Engineer.

Pavement fabric interlayer shall not be placed if the in-place binder is hotter than 325 degrees F or has cooled to 180 degrees

F or below (as determined by non-contact thermometer).

Pavement fabric interlayer shall be placed onto the asphaltic binder with the heat bonded side up with a minimum amount of wrinkling or folding. Remaining wrinkles or folds 1-inch and larger shall be removed or slit and shingle-lapped in the direction of paving. Burning or torching of wrinkles is not allowed. Fabric shall overlap three to six inches to insure full closure of the joint. Transverse joints shall be shingle-lapped in the direction of paving to prevent edge pickup by the paver. A second application of hand-placed asphalt binder may be required at laps and repairs as determined by the Engineer to ensure proper binding of the narrow double fabric layer.

All areas where fabric has been placed shall be paved with asphaltic concrete during the same workshift. Placement of the asphaltic concrete shall closely follow fabric lay down. The temperature of the asphaltic concrete immediately behind the laydown machine shall not exceed 325 degrees F, unless WMA technology is being used. If WMA technology is being used then the minimum requirements will be stated within the mix design recommended by the WMA manufacturer. In the event that the asphalt binder coat bleeds through the fabric causing construction problems before the overlay is placed, the affected areas shall be sanded with a sand blotter in compliance with Section 333. Excess sand shall be removed before beginning the paving operation. In the event of rainfall prior to the placement of the asphaltic concrete, the fabric shall be allowed to dry before the asphalt concrete is placed.

Turning of the paving machine or of other vehicles on the fabric shall be gradual and kept to a minimum to avoid damage to the fabric. Should equipment tires stick to the fabric during pavement operations, small quantities of paving asphalt concrete shall be broadcast on the fabric to prevent pick-up. Decrease of binder rate in order to minimize pick-up on tires is not allowed.

321.8.8 Thickened Edge: When the depth of the thickened edge extends four inches or more below the bottom of the asphalt pavement, the portion of the thickened edge extending below the asphalt pavement shall be placed and compacted prior to placement of the asphalt pavement. Placement of tack coat on the surface of the compacted thickened edge asphalt may be omitted when additional asphalt pavement is placed on the same day and the Engineer agrees that the surface of the thickened edge asphalt has remained clean.

When the depth of the thickened edge extends less than four inches below the bottom of the asphalt pavement, the portion below the asphalt pavement may be placed and compacted with the asphalt pavement in a single operation.

321.8.9 Safety Edge: The finished safety edge slope shall be planar forming a 30° ± 5° angle with the adjacent roadway surface and extend a minimum of five inches (5”) below the roadway pavement’s finished surface.

The safety edge shall be constructed with the top or final paving lift of a new pavement or overlay using a device that is mounted to or is a part of the screed portion of the laydown machine. The safety edge device shall be capable of constraining the asphalt concrete material to increase density of the extruded profile by reducing the volume. A conventional single strike-off plate is not acceptable. Compaction obtained from the extruded safety edge shall be acceptable when the extruded shape conforms to the specified shape.

During laydown operations if the extruded safety edge does not conform to the specified shape, the Contractor shall take immediate actions to correct the deficiency and to repair all non-compliant sections of safety edge. The Contractor shall stop paving operations until corrections to the laydown operation have been made and resumption of paving is approved by the Engineer or his designated representative.

321.9 QUALITY CONTROL:

It is the contractor’s responsibility to perform Quality Control monitoring and/or testing during asphalt concrete production to achieve the required compaction and to perform Quality Control monitoring and/or testing during asphalt concrete production to achieve the required mix properties. The Engineer may obtain samples of any portion of any material at any point of the operations for his own use. Also, the Engineer may order the use of any drying, proportioning and mixing equipment or the handling of any material discontinued which, in his/her opinion, fails to produce a satisfactory mixture.

The asphalt concrete produced shall conform to the requirements of the production tolerances established in section 321.10. When the asphalt concrete does not conform to the production tolerances, it shall be reported to the Engineer, and corrective quality control measures shall be implemented, or production shall cease immediately at no additional cost to the contracting

710.3 MIX DESIGN REQUIREMENTS:

710.3.1 General: The mix design for asphalt concrete shall be prepared by a laboratory that is accredited through the AASHTO Accreditation Program (AAP) in Hot Mix Asphalt Aggregates and Hot Mix Asphalt. The laboratory shall be under the direct supervision of a Civil Engineer, registered by the State of Arizona, and who is listed by ADOT as a "Qualified Asphaltic Concrete Mix Design Engineer" within ADOT's latest list of approved laboratories. The latest list of approved laboratories is available on ADOT's web page www.azdot.gov. The date of the design shall not be older than one year from the date of submittal, unless supportive documentation is provided and approved by the Engineer.

The mix design report shall include the following elements as a minimum.

(1) The name and address of the testing organization and the person responsible for the mix design report.

(2) The mix plant identification and/or location, as well as the supplier or producer name.

(3) A description of all products that are incorporated in the asphalt concrete along with the sources of all products, including admixtures and asphalt binder, and their method of introduction.

(4) The supplier and grade of asphalt binder, the source and type of mineral aggregate, and the percentage of asphalt binder and mineral admixture used.

(5) The percentage of RAP and RAP Binder being contributed to the total mix shall be included in the mix design report.

(6) The mix design report whether Gyratory or Marshall shall state the traffic condition (low or high traffic) and size designation.

(7) The results of all testing, determinations, etc., such as: specific gravity and gradation of each component, water absorption, sand equivalent, loss on abrasion, fractured coarse aggregate particles, Tensile Strength Ratio (ASTM D 4867), Marshall stability and flow, asphalt absorption, percent air voids, voids in mineral aggregate, and bulk density. Historical abrasion values may be supplied on existing sources. The submittal should include a plot of the gradation on the Federal Highway Administration's 0.45 Power Gradation Chart, plots of the compaction curves and the results of moisture sensitivity testing.

(8) The laboratory mixing and compaction temperature ranges for the supplier and grade of asphalt binder used within the mix design.

(9) A specific recommendation for design asphalt binder content and any limiting conditions that may be associated with the use of the design, such as minimum percentages of crushed or washed fine aggregate.

(10) The supplier's product code, the laboratory Engineer's seal (signed and dated), and the date the design was performed.

(11) If a Warm Mix Technology or Additive is used; the following must be included:

- Technology Type and Supporting Manufacturer information; including instructions pertaining to laboratory mixture temperatures and curing.
- Amount (%) of additive (technology) used in the mixture
- Attached copy of the ADOT approved product list, showing additive / technology
- Minimum plant production temperature shall not fall below manufacturers recommendation (250° F recommended)
- Minimum compaction temperature shall not fall below manufacturers recommendation

MARICOPA COUNTY
Department of Transportation

MEMORANDUM

Date: May 21, 2014

To: MAG Specifications and Details Committee

From: Robert Herz, MCDOT Representative

Subject: Delete the use of Asbestos-Cement Pipe in Valve Box Installations **Case 14-11**

PURPOSE: Delete the use of Asbestos-Cement Pipe in Valve Box Installations.

REVISION: Replace ACP with PVC C900 pipe in Detail 391-2 and make associated drawing changes to Details 391-1 and 392. See the attached marked-up drawings. Also revise specification Section 610.7 as needed to accommodate the change. This change is patterned after City of Phoenix Detail P1391.

610.7 VALVES:

Valves shall be installed in accordance with AWWA C-600 or AWWA C-603 modified as follows:

All tapping sleeves, gate valves, butterfly valves, air release and vacuum valves and corporation stops shall be in accordance with Section 630.

Just before installation in the trench, valves shall be fully opened and closed to check the action, and a record made of the number of turns required to fully open or close the valve. For valves 16 inches and larger, a member of the water utility shall be present to check the action and record the number of turns. The inside of all valves shall then be thoroughly cleaned and the valve installed.

Valves 12 inches and smaller in size shall be supported by concrete blocks, in accordance with the standard details.

Valves 16 inches and larger in size along with their bypass valves, shall be supported on concrete slabs, and/or concrete piers, as indicated on the plans.

Concrete supports shall be provided under valves in vaults and manholes, and shall be constructed an inch low, then grouted with non-shrink grout. Adjustable pipe supports shall be as indicated on the plans. Buried valves shall be supported on concrete blocks as detailed on the plans.

Valve boxes shall be installed over all buried valves in accordance with standard details.

Standard couplings or matching joints shall be used when more than one length of pipe is required, or when two or more pieces are joined, to form the valve box riser. Install extension stems on all valves where the operating nut is 5 feet or more below grade.

2901 West Durango Street Phoenix, Arizona 85009 Phone: 602-506-4760 Fax: 602-506-5969

CASE 14-11

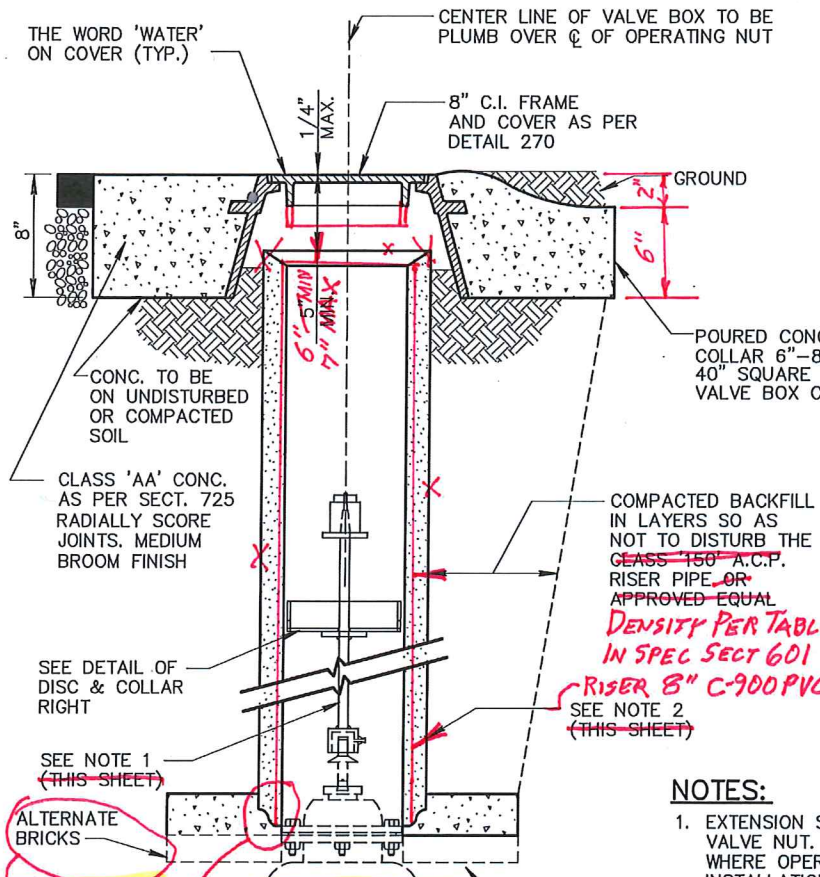

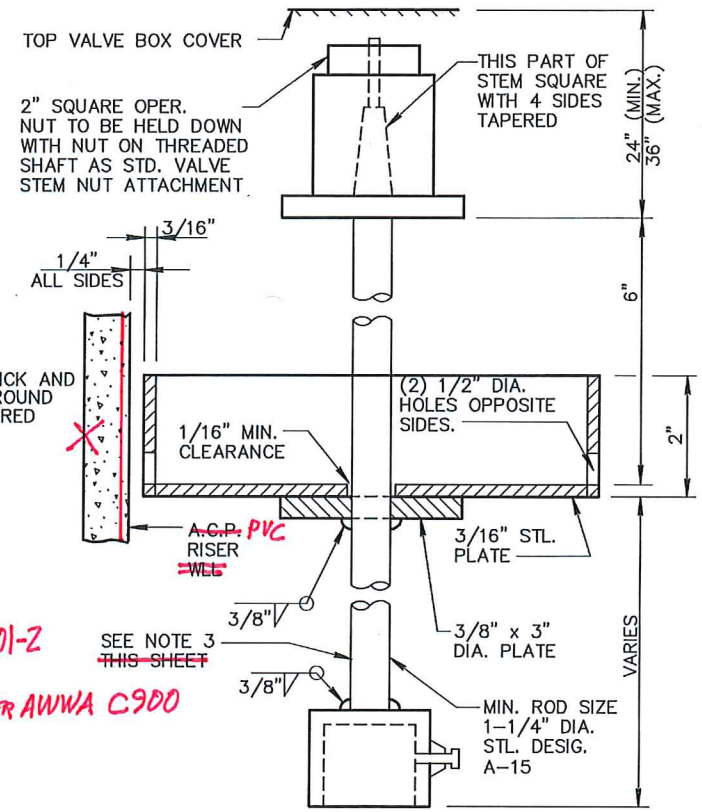

NOTES:

1. EXTENSION STEM: WITH SQUARE SOCKET ON BOTTOM TO FIT 2" SQUARE VALVE NUT. EXTENSION TO VALVE STEMS REQUIRED ON ALL VALVES INSTALLED WHERE OPERATING NUT IS OVER 5' BELOW SURFACE. LENGTH TO FIT EACH INSTALLATION. OPERATING NUT TO BE HELD ON TOP OF EXTENSION WITH STOP NUT.
2. IF TWO OR MORE ~~JOINTS~~ OF ~~A.C.P.~~ ARE USED TO MAKE RISER, ~~USE STANDARD A.C. PIPE RUBBER GASKET COUPLING TO JOIN PIPE~~. WHERE RISER LENGTH EXCEEDS 10' USE 12' ~~A.C.~~ PVC RISER PIPE. CUT RISER PIPE TO LENGTH IN FIELD. THEY SHALL BE COUPLED AND BONDED WITH AN APPROPRIATE PVC ADHESIVE TO FORM A DEBRIS-TIGHT JOINT.
3. STEM PAINTING: ALL STEEL TO HAVE PRIME COAT OF PAINT NO. 1–D AND ONE HEAVY APPLICATION (FINISH COAT) OF PAINT NO. 9 AS PER SECT. 790. SECTIONS PIPE

DETAIL NO.				REVISED	DETAIL NO.
391–2	MARICOPA ASSOCIATION of GOVERNMENTS	STANDARD DETAIL ENGLISH	VALVE BOX INSTALLATION AND GRADE ADJUSTMENT	01–01–2001	391–2

CASE 14-11

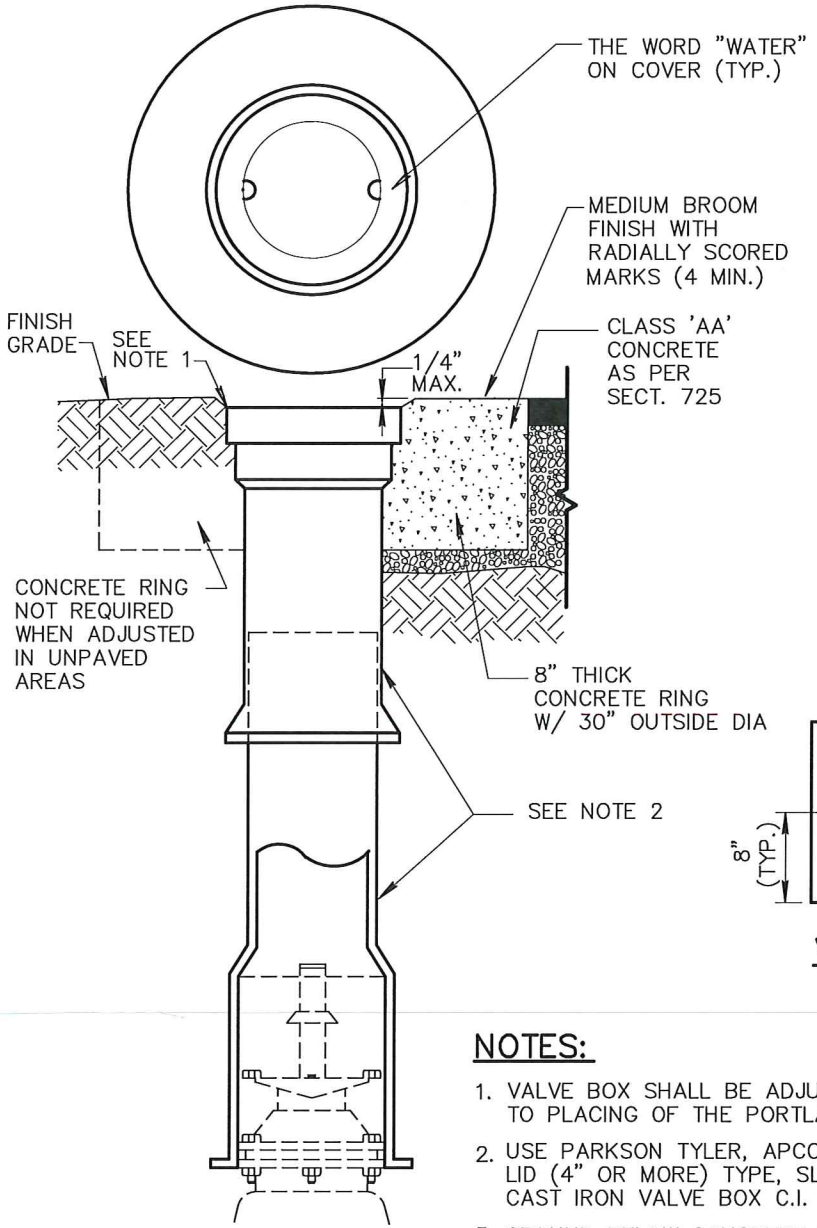

TYPE 'C'

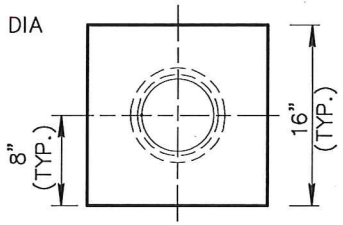

VIEW A–A

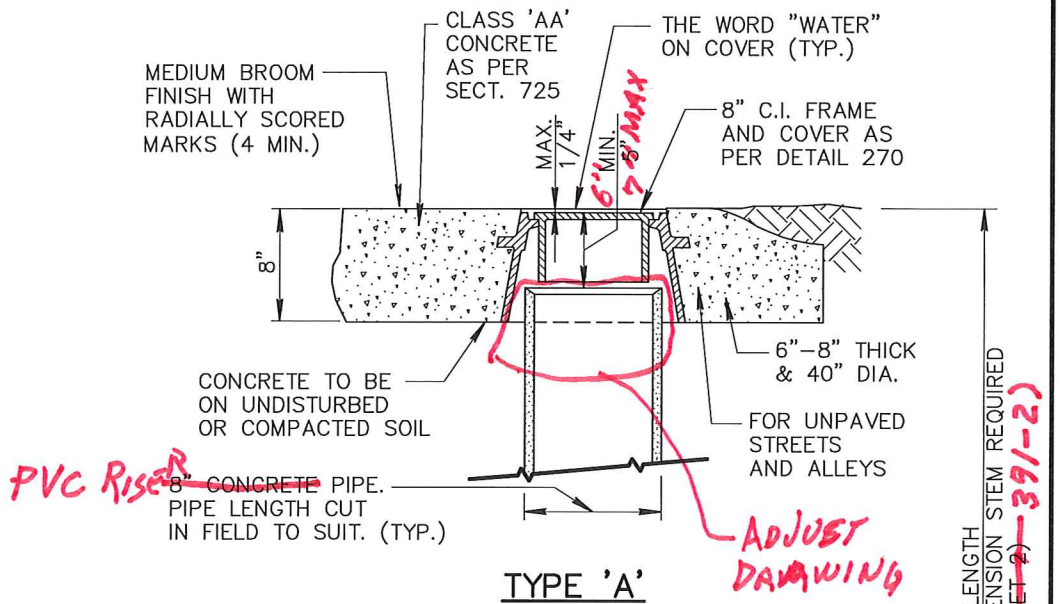

TYPE 'A'

(TO BE USED IN AREAS SUBJECT TO VEHICULAR TRAFFIC.)

5' (MAX.) LENGTH FOR DEPTHS OVER 5' EXTENSION STEM REQUIRED (SEE ~~SHEET 2~~ 391-2)

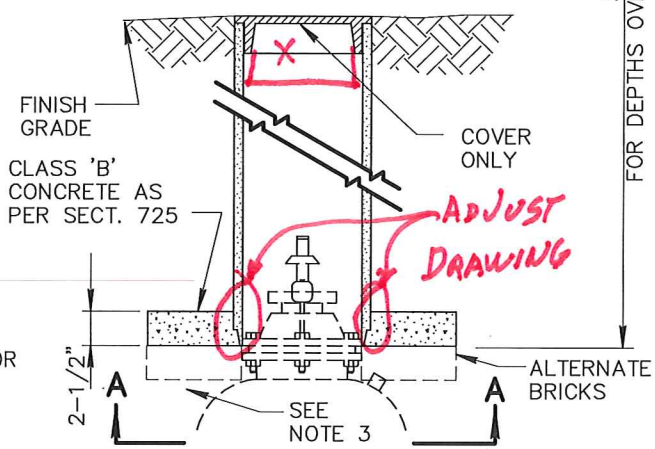

TYPE 'B'

(NOT SUBJECT TO VEHICULAR TRAFFIC)

NOTES:

1. VALVE BOX SHALL BE ADJUSTED TO THE FINISHED GRADE PRIOR TO PLACING OF THE PORTLAND CEMENT CONCRETE SURFACE.
2. USE PARKSON TYLER, APCO OR EQUAL DEEP SKIRTED LID (4" OR MORE) TYPE, SLIDING ADJUSTABLE CAST IRON VALVE BOX C.I. MIN. T.S. 30,000 P.S.I.
3. GROUND BELOW CONCRETE PAD OR 3 BRICKS TO BE COMPACTED 95% OF MAX. DENSITY.

DETAIL NO.		STANDARD DETAIL		REVISED	DETAIL NO.
391–1	MARICOPA ASSOCIATION of GOVERNMENTS	ENGLISH	VALVE BOX INSTALLATION AND GRADE ADJUSTMENT	01–01–2014	391–1

CASE 14-11

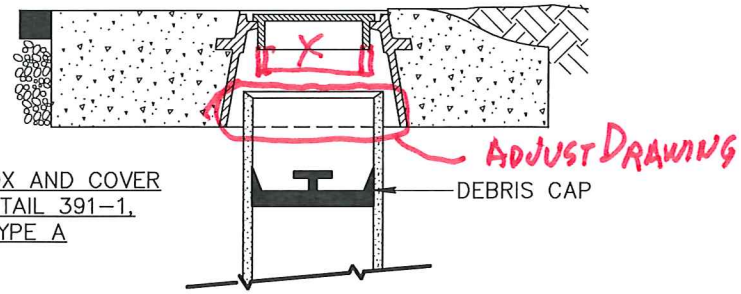

TYPE 'A'

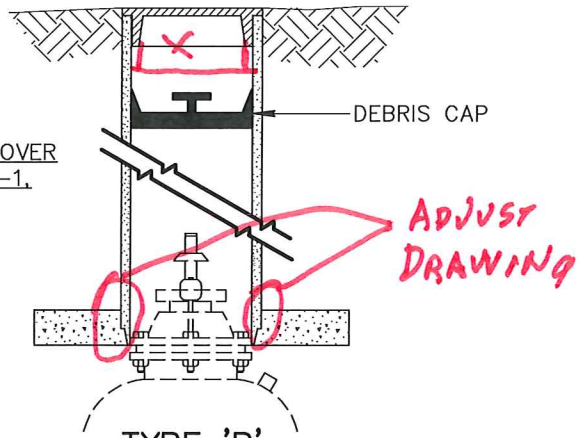

TYPE 'B'

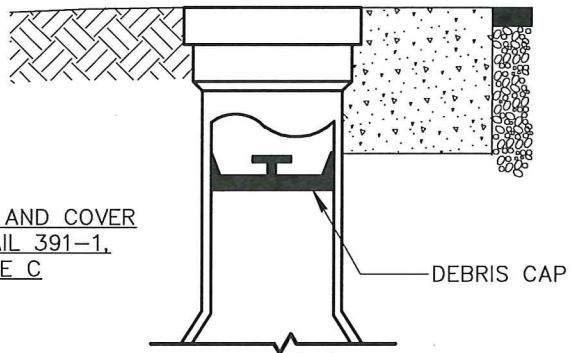

TYPE 'C'

NOTES:

1. THE DEBRIS CAP SHALL BE DESIGNED AND INSTALLED TO PREVENT DEBRIS SUCH AS DIRT, DUST SAND, ETC., FROM PASSING AROUND THE CAP AND DOWN INTO THE VALVE HOUSING. THE CAP SHALL BE HELD IN PLACE BY A MECHANISM WHICH WILL NOT DAMAGE THE VALVE HOUSING. ONCE INSTALLED THE CAP MUST WITHSTAND, WITHOUT SLIPAGE, A MINIMUM VERTICAL FORCE OF 50 POUNDS AT A LOADING RATE OF 1 INCH/MINUTE. ?
2. THE CAP SHALL BE MANUFACTURED OF CORROSIVE RESISTANT MATERIALS.
3. DEBRIS CAP SHALL BE INSTALLED AS CLOSE UNDER THE CAST IRON COVER WITHOUT INTERFERING WITH COVER OPERATION.
4. THE CAP SHALL BE CAPABLE OF SECURELY HOLDING A STANDARD LOCATING COIL, "SCOTCH MARK" 4 DISK MARKER BY 3M OR EQUAL.
5. THE CAP SHALL BE CONSTRUCTED TO ALLOW THE DEVICE TO BE SECURED BY A LOCK. THE LOCK (PAD, BARREL, ETC.) SHALL BE SUPPLIED BY THE AGENCY.
6. THE HANDLE AND/OR BODY OF THE CAP SHALL BE INTEGRALLY COLORED IF REQUIRED BY THE AGENCY. IF REQUIRED, THE COLOR SHALL CONFORM TO THE ONE CALL LOCATING SERVICE (BLUE STAKE) COLORS (ARS 40-360.21).
7. THE CAP SHALL BE INSTALLED IN ALL VALVE HOUSINGS AS REQUIRED BY THE CONTRACT DOCUMENTS OR BY THE AGENCY'S POLICIES.
8. THE DEBRIS CAP SHALL BE MANUFACTURED BY SW SERVICES, INC. PHOENIX, ARIZONA OR EQUAL.

DETAIL NO.			REVISED	DETAIL NO.
392	MARICOPA ASSOCIATION of GOVERNMENTS — STANDARD DETAIL ENGLISH	DEBRIS CAP INSTALLATION	01-01-2001	392

NOTES:

1. VALVE OPERATION NUT EXTENSION: SEE DETAIL P1391–1
   EXTENSION TO VALVE STEMS REQUIRED ON ALL VALVES WHERE OPERATING NUT IS OVER 5' BELOW SURFACE. LENGTH TO FIT EACH INSTALLATION.
2. IF TWO OR MORE JOINTS OF C900 PVC "WATER" PIPE RISER ARE NEEDED, THEY SHALL BE COUPLED AND GLUED WITH APPROPRIATE PVC GLUE TO FORM A DEBRIS–TIGHT JOINT.
3. VALVE BOX SHALL BE ADJUSTED TO THE FINISH GRADE AFTER PLACING THE ASPHALTIC CONCRETE SURFACE.
4. USE PARKSON TYLER, APCO, OR EQUAL DEEP SKIRTED COVER LID (4" DEEP OR MORE) C.I. MIN. T.S. 30,000 P.S.I. USE SECURE POLYMER VALVE BOX LID WITH LID–RETENTION ELASTOMERIC SEAL PER DETAIL P1270–1 WHERE "SECURE" LIDS ARE SPECIFIED.
5. GROUND BELOW CONCRETE PAD TO BE COMPACTED TO MIN. 95% OF MAX DENSITY.
6. INSTALL DEBRIS CAP PER DETAIL P1165.

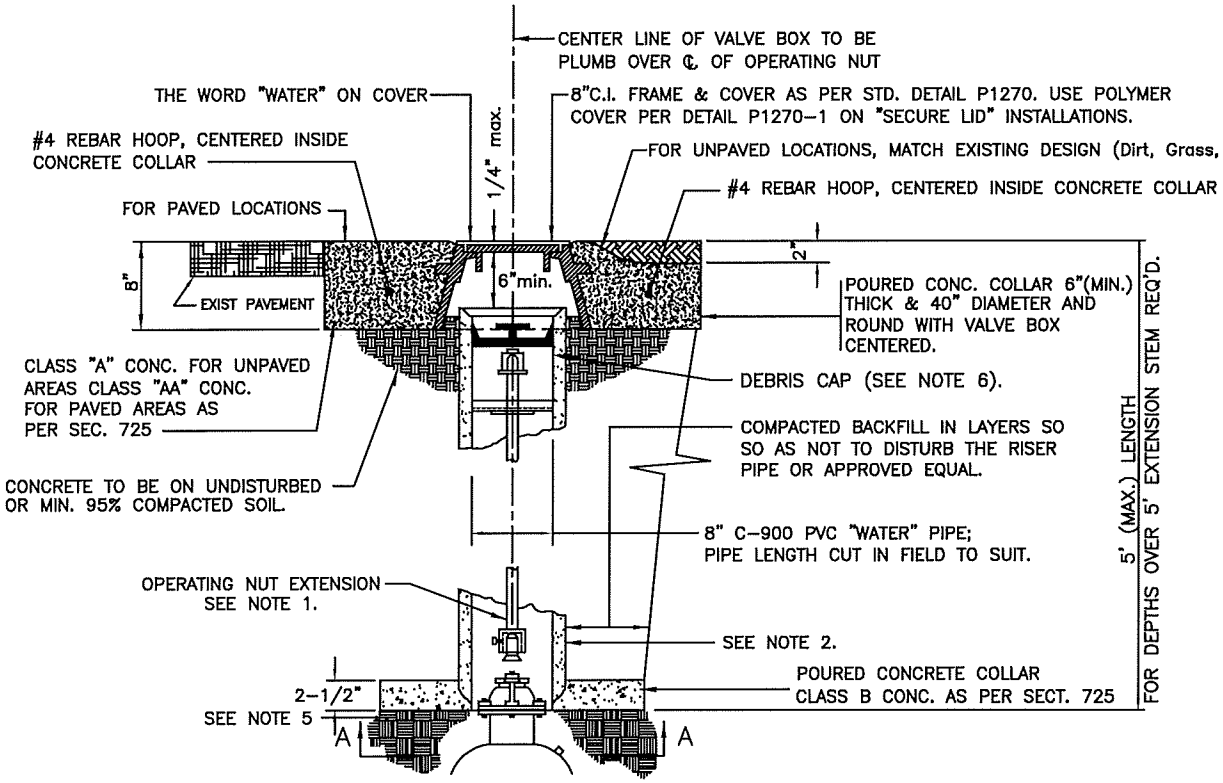

TYPE 'A'

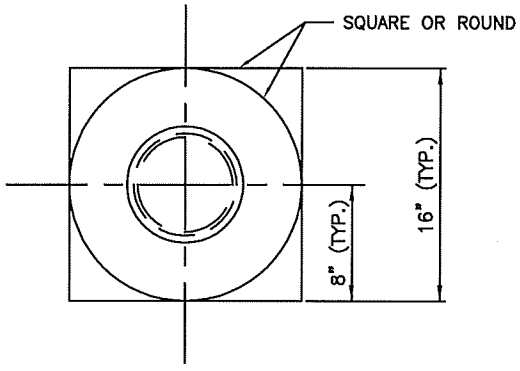

VIEW A–A

REVISED 4/14/08

DETAIL NO.	City of Phoenix STANDARD DETAIL	VALVE BOX INSTALLATION	APPROVED ACTING CITY ENGINEER 7/31/08 DATE	DETAIL NO.
P1391				P1391

Water/Sewer Working Group Meeting

Meeting Notes
May 20, 2014

Opening:
A meeting of the Specifications and Details Water/Sewer Working Group was called to order by chair Jim Badowich on May 20, 2014, at 1:35 p.m. in the MAG Chaparral Room.

1. Introductions/Attendance
Tony Ayala (Avondale), Jim Badowich (Avondale), Arturo Chavarria (Hanson), Jami Erickson (Phoenix), Rob Godwin (Goodyear), Matthew Houser (Contech), Jason Jackson (Oldcastle), Mike Molina (Oldcastle), Paul Nebeker (Pipe Right), Craig Sharp (Buckeye), Gordon Tyus (MAG), Arvid Veidmark (Specialized Services), Stew Waller (Rinker), Warren White (Chandler)

2. Manhole Revisions/Update (Cases 13-21 and 13-22)
Craig Sharp handed out revisions based on feedback from Maricopa County and comments during the last committee meeting. Discussion included changing Section 742 to incorporate the entire Precast Manhole and referencing it in Section 625. The group agreed to remove the section on casting types since it would not matter as long as they meet the stated ASTM specs. The group also discussed Detail 420-2 in depth and made many suggestions to improve the clarity of the drawing including mirroring the flexible connector on the left side and clarifying the dimensions for the extended bottom. Mr. Sharp also updated the other details including adding the adjusting ring detail on 422.

3. Revisions to Rigid and Flexible Pipe Installation (Case 13-15)
Warren White handed out copies of Section 601 and discussed comments provided by Bob Herz of Maricopa County. Suggested changes included changing the width measurement in Table 601-1 to the O.D. of the bell instead of the barrel. The group did not believe the minimum width should be reduced any further. The group agreed with Mr. Herz on several comments including changing “minimum compaction” to “proper compaction,” changing “final acceptance” to “commencement” and deleting the second paragraph of 610.2.9. The working group also discussed jetting and water consolidation processes, and decided to allow jetting but with smaller lifts and with additional testing requirements. Mr. White would incorporate changes for the next committee meeting.

4. Consolidate Testing (Section 611)
Jami Erickson began consolidating all the testing requirements into a new Section 611. The group discussed the organization of the testing section, but did not want to make other changes to the requirements themselves in this case since it is needed to go along with other changes proposed in Case 13-15. Other sections where the testing was moved would need to be updated by deleting the text and referencing the new section. Some testing requirements for materials may need to stay where they currently are. She asked members to provide feedback during the next week, and said she would be preparing a case to submit at the June 4th committee meeting.

5. Water Testing/Flushing
Rob Godwin said he made revisions to Section 610 to better organize it and remove the testing requirements to go along with the new Section 611. Jim Badowich asked him to incorporate the revised specs for polywrap sizes. Mr. Tyus provided an updated table used by AWWA. Mr. Godwin said he would continue working on the case, but will need a committee member to sponsor the case.

6. Jacking Tunneling and Boring/Horizontal Drilling
Arvid Veidmark said he planned to add other pipe types that can be used for Jacking and Tunneling for Case 14-08: New Section 607. He said he would provide the revisions to Mr. Tyus to include in the agenda packet since it is scheduled for a vote at the next committee meeting. He also handed out a revised draft of a proposed Section 608 for Boring/Horizontal Drilling. Mr. Veidmark received and incorporated feedback from industry representatives in the draft. He described the process used, and included a drawing showing the basic layout of the equipment and boring path.

7. Next Meeting Date
The next meeting of the Water/Sewer working group is scheduled for Tuesday, June 17th at 1:30 p.m. at the MAG office.

The meeting was adjourned at 4:30 p.m.

Report to MAG Technical Committee
Meeting April 24, 2014
Asphalt and Materials Working Group meetings
By Chairmen, Jeff Benedict, Brian Galimore

The meeting was held on noon on May 22, 2014 at the ARPA offices.

Present at the meeting: Bob Herz (MCDOT), Brian Gallimore (WSP), Scott Thompson, Greg Groneberg (S.W. Asphalt), Margie Torres (Peoria), Doug Carlson (Liberty Tire), Sam Huddleston (Western Refining), Jeff Hearne (SRMG), and Gordon Tyus (MAG).

Cases for submittal:
Case 14-06 revisions to section 718 table 718-1. Sam Huddleston went over the issues of needing to bring the specification into current production limits for this material. There were several changes made to the table type ”C.” He explained that a complete rewrite is needed to explain all of the different requirements. He further asked if “sealcoat” type materials should be included. It was determined that this should be done and include them in the rewrite.

Section 321 with regard to the allowance of “warm mix” technologies was passed out and discussed. Adrian Green made the requested changes from the whole MAG committee. This will go to the main committee.

Section 321 with MCDOT supplements was again reviewed by the working group. There were two recommended changes discussed. Bob Herz will discuss and decide how to make the recommended changes. If he can get the changes completed he will bring to the committee as a new case.

Discussion on the “rock correction factor” as determined by the ADOT “Arizona” method was held and it was agreed that this will become a case.

The next working group meeting will be held on 6-26-2014 at the ARPA office at noon. This meeting was adjourned at 1:40PM

MAG Concrete Working Group

Meeting Notes

Thursday, May 22, 2014, 1:00 pm at the ARPA Offices

Present:

See attached attendance sheet.

Discussion:

1) Discussion regarding City of Phoenix proposed detail revisions regarding Class B and Class A concrete requirements and locations for curbs and sidewalks
2) Revision to Section 725 – Jeff Hearne (Revision 5-22-14)
    a. Discussion regarding the Portland cement minimum requirements and SCM percentages
    b. Discussion regarding slump/water addition language and requirements with some minor changes

Date for Next Meeting:

The next meeting is scheduled for **June 26, 2014 @ 1:00 pm** in the ARPA offices.
(Following the Asphalt and Materials Working Group meetings)

Any and all participants are welcome and encouraged to be involved.

MAG Concrete Working Group

Thursday, May 22, 2014

Attendance Initials					
GT	Gordon Tyus	MAG	Maricopa Association of Governments	602-254-6300	GTyus@azmag.gov
BH	Bob Herz	McDOT	Maricopa County	602-506-4760	rherz@mail.maricopa.gov
	John Shi	McDOT	Maricopa County		johnshi@mail.maricopa.gov
	Jacob Rodriguez	Utility	Salt River Project	602-236-8613	jacob.rodriguez@srpnet.com
	Syd Anderson	Municipality	City of Phoenix	602-495-2047	syd.anderson@phoenix.gov
	Richard Soltero	Municipality	City of Phoenix	602-495-2063	richard.soltero@phoenic.gov
	Don Hansen	Municipality	City of Chandler	480-215-9264	don.hansen@chandleraz.gov
	Bob Draper	Municipality	City of Mesa	480-644-3822	bob.draper@mesaaz.gov
	Rob Godwin	Municipality	City of Goodyear	623-693-2457	rob.godwin@goodyearaz.gov
	Brandon Forrey	Municipality	City of Peoria	623-773-7201	brandon.forrey@peoriaaz.gov
MT	Margie Torres	Municipality	City of Peoria		margarita.torres@peoriaaz.gov
BG	Brian Gallimore	Contractor	WSP Inc	623-434-5050	bgallimore@wspinc.net
JH	Jeff Hearne	Producer	Salt River Materials Group	480-850-5757	jhearne@srmaterials.com
	Mike Kohout	Producer	Cemex	602-220-5631	mkohout@cemexusa.com
	Robert Barkley	Producer	Hanson Aggregates of Arizona	602-685-3436	robert.barkley@hansen.biz
	Tom Romero	Producer	CPC Southwest Materials	520-744-3222	tromero@calportland.com
	Adrian Green	Producer	Vulcan Materials	602-528-8692	greenaj@vmcmail.com
	Tom Villa	Producer	Rock Solid Concrete	602 339-7375	tvilla@rocksolidconcrete.com
	John McClafferty	Producer	Drake Materials	602-881-1650	jmcclafferty@drakeus.com
	Angelo Trujillo	Producer	BASF Admixtures	480-824-3733	angelotrujillo@cox.net
	Derek Imperial	Producer	BASF Admixtures	480-993-6948	derek.imperial@basf.com
	Greg Dorsch	Producer	BASF Admixtures	480-363-5646	greg.dorsch@basf.com
	David Allen	Producer	Boral Materials	602-861-5100	david.allen@boral.com
JB	Jeff Benedict	Producer	Valero Energy Corp	602-989-6121	Jeff.Benedict@valero.com
	Matthew Marcus	Testing Laboratory	Ninyo & Moore	602-243-1600	mmarcus@ninyoandmoore.com
	William Smith	Testing Laboratory	Terracon	480-897-8200	whsmith@terracon.com
ST	Scott Thompson	Testing Laboratory	Cardno ATC	602-290-0840	scott.thompson@cardno.com
	Bob Kostelny	Testing Laboratory	Cardno ATC	480-244-4350	robert.kostelny@cardno.com
	Don Cornelison	Testing Laboratory	Speedie and Associates	602-997-6391	dcornelison@speedie.net
	Raphael Tixier	Testing Laboratory	Western Technologies Inc.	602-437-3737	r.tixier@wt-us.com
	Mike Whitman	Testing Laboratory	Western Technologies Inc.	602-437-3737	mike.w@wt-us.com
	Phillip Feliz	Testing Laboratory	Western Technologies Inc.	602-437-3737	phil.f@wt-us.com
	Peter Kandaris	Consultant	DGA	602-236-8613	pkandaris@dgacon.com
	Steve Trussel	ARPA	Arizona Rock Products Association	602-271-0346	steve@azrockproducts.org
	Dan Duffy	ARPA	Arizona Rock Products Association	602-271-0346	dan@azrockproducts.org
GG	Greg Groneberg	Producer	Southwest Asphalt		ggroneberg@fisherind.com
SH	Sam Huddleston	Producer	Western Refining		sam.huddleston@wnr.com
DC	Doug Carlson	Producer	Liberty Tire Recycling		dcarlson@libertytire.com