July 2, 2014

TO: Members of the MAG Standard Specifications and Details Committee

FROM: Tom Wilhite, City of Tempe, Chair

SUBJECT: MEETING NOTIFICATION AND TRANSMITTAL OF TENTATIVE AGENDA

Wednesday, July 9, 2014 at 1:30 p.m.
MAG Office, Suite 200 (Second Floor), Ironwood Room
302 North 1st Avenue, Phoenix

A meeting of the MAG Specifications and Details Committee has been scheduled for the time and place noted above. Members of the MAG Specifications and Details Committee may attend the meeting either in person, by videoconference or by telephone conference call. If you have any questions regarding the meeting, please contact Committee Chair Tom Wilhite at 480-350-2921 or Gordon Tyus, MAG staff at 602-254-6300.

In 1996, the Regional Council approved a simple majority quorum for all MAG advisory committees. If the MAG Specifications and Details Committee does not meet the quorum requirement, no action can be taken. Attendance at the meeting is strongly encouraged.

Pursuant to Title II of the Americans with Disabilities Act (ADA), MAG does not discriminate on the basis of disability in admissions to or participation in its public meetings. Persons with a disability may request a reasonable accommodation, such as a sign language interpreter, by contacting Gordon Tyus at the MAG office. Requests should be made as early as possible to allow time to arrange the accommodation.

It is requested (not required) that written comments on active cases be prepared in advance for distribution at the meeting.

MAG Standard Specifications and Details Committee
TENTATIVE AGENDA
July 9, 2014

	COMMITTEE ACTION REQUESTED
1. Call to Order and Introductions	
2. Call to the Audience An opportunity is provided to the public to address the MAG Specifications and Details Committee on items that are not on the agenda that are within the jurisdiction of MAG, or non-action agenda items that are on the agenda for discussion or information only. Citizens will be requested not to exceed a three minute time period for their comments. A total of 15 minutes will be provided for the Call to the Audience agenda item, unless the committee requests an exception to this limit. Please note that those wishing to comment on agenda items posted for action will be provided the opportunity at the time the item is heard.	2. Information.
3. Approval of June 4, 2014, Meeting Minutes	3. **Review and approve minutes of the June 4, 2014 meeting.**
Carry Forward Cases from 2013	
4. Case 13-15: Revisions to MAG Sections 101, 601, 603, 615 and 618 for installing rigid and flexible pipe. Update Details 200-1, 200-2.	4. Information and discussion. Sponsor: Warren White, Chandler, *Updated*
5. Case 13-21: Create a new Section 742 Pre Cast Manhole Bases. Add details for construction and installation. Update existing manhole details.	5. Information and discussion. Sponsor: Craig Sharp, Buckeye *Updated*
6. Case 13-22: Update Sections 625 and 775 to remove references to steps and the use of bricks in manholes.	6. Information and discussion. Sponsor: Craig Sharp, Buckeye *Updated*
New Cases for 2014	
7. Case 14-01: Misc. Corrections A. Change "transverse" to "longitudinal" in Section 321.8.2 B. In section 739.1 delete the extra occurrence of the word 'Pipe'. C. Delete "OR BRICK" from the title of Section 345.	7. Information and discussion. Sponsors: Rod Ramos, Scottsdale Bob Herz, MCDOT

8. Case 14-03: Updates to Guardrail Details
Revisions to Section 415 and/or inclusion of MCDOT guardrail details.

8. Information and discussion.
Sponsor: Bob Herz, MCDOT

9. Case 14-05: Revision to Section 324 Portland Cement Concrete Pavement
Update section for current methods.

9. **Information, discussion and possible action.**
Sponsor: Jeff Hearne, Concrete Working Group
Updated

10. Case 14-06: Revisions to Section 718 Preservation Seal for Asphalt Concrete
Update specifications for current preservative seal products.

10. Information and discussion.
Sponsor: Jeff Benedict, Asphalt Working Group

11. Case 14-10: Include Language to Allow Use of Warm Mix Asphalt
Update Sections 321 and 710.

11. Information and discussion.
Sponsor: Jeff Benedict, Asphalt Working Group
Updated

12. Case 14-11: Delete the use of Asbestos-Cement Pipe in Valve Box Installations.
Update Section 610.7, Details 391-1, 391-2, and 392.

12. Information and discussion.
Sponsor: Bob Herz, MCDOT

13. Case 14-12: Proposed Revisions to Sections 336.3 and 336.4.
Add pavement removal criteria to prevent full depth pavement cuts from being located within a lane wheel path.

13. Information and discussion.
Sponsor: Bob Herz, MCDOT

14. Case 14-13: Revisions to Section 321.
Incorporate MCDOT enhancements to Section 321 PLACEMENT AND CONSTRUCTION OF ASPHALT CONCRETE PAVEMENT into the MAG Specifications.

14. Information and discussion.
Sponsor: Bob Herz, MCDOT

15. Case 14-14: Consolidate all testing requirements in a new Section 611.
Also delete and reference appropriate section in places where testing moved.

15. Information and discussion.
Sponsor: Jami Erickson, Phoenix

16. Case 14-15: Revisions to Section 610.
Move Hydrostatic Testing from Section 610 to Section 611; update Table 610-1 consistent with AWWA; place Section 610 into sequential order.

16. Information and discussion.
Sponsor: Jim Badowich, Avondale

17. Case 14-16: Revision to Section 310
Placement of Construction of Aggregate Base Course. Change rock correction method to be consistent with Section 301.

17. Information and discussion.
Sponsor: Brian Gallimore, Materials WG
New

18. Case 14-17: Create New Section 322
Provide specifications for Asphalt Stamping - materials and methods.

18. Information and discussion.
Sponsor: Brian Gallimore, Materials WG
New

19. Case 14-17: Create New Section 322
Provide specifications for Asphalt Stamping - materials and methods.

19. Information and discussion.
Sponsor: Bob Herz, MCDOT
New

20. Other New Cases

20. Information and discussion.

General Discussion

21. Working Group Reports

21. Information and discussion.
Water/Sewer Chair: Jim Badowich
06/17/14 Meeting

Asphalt Chair: Jeff Benedict
06/26/14 Meeting

Materials Chair: Brian Gallimore
06/26/14 Meeting

Concrete Chair: Jeff Hearne
06/26/14 Meeting

Outside ROW: Peter Kandaris

22. General Discussion
Staff Report.

22. Information and discussion.

23. Request for Future Agenda Items

23. Information and discussion.

Adjournment

MEETING MINUTES FROM THE MARICOPA ASSOCIATION OF GOVERNMENTS STANDARD SPECIFICATIONS AND DETAILS COMMITTEE

June 4, 2014

Maricopa Association of Governments Office, Ironwood Room
302 North First Avenue
Phoenix, Arizona

AGENCY MEMBERS

Jim Badowich, Avondale, Vice Chair
Craig Sharp, Buckeye
Warren White, Chandler
Antonio Hernandez, El Mirage
* Wayne Costa, Florence
* Tom Condit, Gilbert
Mark Ivanich, Glendale
* Tom Vassalo, Goodyear
Bob Herz, MCDOT
Julie Christoph, Mesa
Dan Nissen, Peoria
Syd Anderson, Phoenix (St. Trans.)
Jami Erickson, Phoenix (Water)
* Rod Ramos, Scottsdale (proxy)
Dan Shaffer, Surprise (proxy)
Tom Wilhite, Tempe, Chair
* Harvey Estrada, Valley Metro
Gregory Arrington, Youngtown

ADVISORY MEMBERS

Jeff Benedict, ARPA
Arvid Veidmark, AZUCA
* Mike Sanders, AZUCA
Adrian Green, AGC
Brian Gallimore, AGC
Jeff Hearne, ARPA
Peter Kandaris, Independent
Paul R. Nebeker, Independent
Jacob Rodriguez, SRP

MAG ADMINISTRATIVE STAFF

Gordon Tyus

* Members not attending or represented by proxy.

GUESTS/VISITORS

Jim Anderson, Olson Precast
Arturo Chavarria, Hanson Pipe
Bill Davis, ADS
Mike Molina, Oldcastle Precast
Stew Waller, Rinker

1. Call to Order

   Chair Tom Wilhite called the meeting to order at 1:33 p.m.

2. Call to the Audience

   Chair Wilhite opened the call to the audience. No members of the audience requested to speak.

3. Approval of Minutes

   The members reviewed the May 7, 2014 meeting minutes. Gordon Tyus said Tom Vassalo of Goodyear was at the last meeting and needed to be added to the list of attendees. Bob Herz said the last sentence under the Case 13-21 summary should read: "He asked if it mattered how the sections and bases were constructed as long as the standards are met." Dan Nisson introduced a motion to accept the minutes with the corrections noted. Bob Herz seconded the motion. A voice vote of all ayes and no nays was recorded.

Carry Forward 2013 Cases

4. Case 13-15: Revisions to MAG Sections 101, 601, 603, 615 and 618 for Rigid and Flexible Pipe. Updates to Details 200-1 and 200-2.

   Update pipe installation requirements. Warren White provided an update to Case 13-15 at the meeting that included the most recent revisions of Sections 101, 601, 603, 615 and 618 along with Details 200-1 and 200-2. He said the Sections that changed were 101, 601 and 603. Mr. White said he is keeping Sections 601 and 603 in sync. The main differences between the two are in the description section and the trench width tables, as well as not allowing native fill for flexible pipe types. The revision incorporated comments from MCDOT and discussion from the last water/sewer working group meeting.

   The working group agreed to keep water consolidation (jetting) in the spec, but wanted guidance on its use. Mr. Badowich said they added a maximum of 3' lifts. Mr. White asked the committee for feedback on increasing the testing requirements. There was discussion whether to double the testing frequency, refer to the geotechnical soil report, or leave it to the discretion of the engineer. Mr. Badowich recommended doubling the testing (which would then be done at every 250'). Mr. Herz said you may need to test it at different depths to make sure it meets compaction throughout. Brian Gallimore thought that using the soil report could be helpful. He also suggested rewording a line so that if water consolidation is not successful, mechanical compaction would be used to meet compaction requirements. Warren White said he would incorporate these recommendations in the next version.

   He next described changes to the compaction density table. Bob Herz asked why the compaction requirement increased from 90% to 95%. Mr. White said that 95% was typical in field compaction results, and many agencies such as Phoenix and Chandler already require 95%. Also the working group believed it would provide a better product, and be less likely to

settle. Jim Badowich said he suggested going up to 97% since most of his testing results were that high. Brian Gallimore said they typically shoot for 97% compaction so they have better certainty of meeting the 95% compaction requirement. Peter Kandaris asked about the use of the term "pipe" and if it included conduit. Most members believed conduit would be considered a type of pipe. Mr. White noted that the Type III requirements (around structures) were changed to have 95% compaction for ABC, 100% for native or to use CLSM.

The last major item of discussion on Case 13-15 was the last paragraph of 601.2.2, the trench width tables, and what to do with embankment failure situations. Bob Herz asked what was meant by a "higher bedding factor." Although this language is in the current spec, representatives from industry suggested removing it since the bedding factor is part of the pipe design requirements, not related to final construction. There was discussion about what to do if the trench was wider than allowed, due either to contractor error or embankment failure due to poor soils or weather conditions. Bob Herz said he thought the spec should detail what should be done. Jami Erickson asked if work should stop until the engineer is consulted. Jim Badowich said typically slurry is used, especially if the trench is undermining existing pavement. Brian Gallimore said he thought the maximum trench width was mainly to establish the pay widths. He said that using a trench box and compacting AB can also correct the problem in some instances and slurry is not always required. Jim Badowich proposed adding language to use slurry in case of safety issues or undermining pavement and allow AB for other conditions. Jami Erickson said that if the trench is too wide there can be loading issues on the pipe that may need the engineer to redesign. Warren White asked members to continue to review and provide comments back to him.

5. <u>Case 13-21: Create a new Section 742 Pre Cast Manholes. Add detail drawings for construction and installation. Update existing manhole details.</u>

   Update specifications and details for pre-cast manhole bases and other corrections. An updated version of Section 742 Precast Manholes was provided in the packet. This new version changed the title of Section 742 to reflect that it provides specifications for the entire precast manhole. Craig Sharp said he changed Detail 422 to add the adjusting ring detail. He said the details were discussed during the last working group meeting and updated according to the group's recommendations. On Detail 420-2 the bell was removed from the picture and note #14 was revised. Bob Herz said that Detail 420-1 needed to show details for the cast-in-place base such as the shelf. Mr. Sharp said he could refer to Detail 420-3. Bob Shaffer found a typo in note #13 of Detail 420-2. Bob Herz said the note "medium broom finish" on Detail 422 did not need to point to the plan view. He also asked if the manhole penetration spec in Section 742 should be duplicated in Section 625 for penetrations done in the field. Mr. Herz also wondered if gaskets should be part of the construction spec. Mr. Sharp said typically gaskets are built-in at the factory, but sometimes they are added in the field, and he would review these issues. Finally Mr. Herz suggesting adding a note for the grouting around the adjustment ring and cover to make a water-tight seal.

6. Case 13-22: Update Sections 625 and 775 to remove references to the use of bricks in manholes and remove references to manhole steps.

   Craig Sharp said he received no comments since the last meeting. Bob Herz proposed changing the title to "Sanitary Sewer and Manhole Construction." He also suggested removing Section 625.2 completely since brick manholes are no longer allowed. Mr. Herz also had a question on Section 725.1.1 regarding types of bricks. There are still references to using bricks in Details 301, 346, etc., but it is not clear what kind of bricks should be used. The section includes bricks previously used for manholes as well as building bricks and facing bricks. He felt that type of bricks used for specific applications should be clearer. Mr. Sharp said he would research the ASTM specs for the different brick types.

New Cases for 2014

7. Case 14-01: Miscellaneous Corrections.

   Two new correction cases were introduced. Mr. Herz said members could refer to the case descriptions.
   A. *Change "transverse" to "longitudinal" in Section 321.8.2.*
   B. In section 739.1, delete the extra occurrence of the word 'Pipe'.
   C. Delete "OR BRICK" from the title of Section 342.

8. Case 14-02: Revisions to Section 405 Monuments and Detail 120.

   Update specifications to match current details and requirements. Mr. Herz said he corrected the note so that Type C monuments would not be used for subdivision corners. Mr. Herz asked for comments and seeing none, he moved to approve Case 14-02 as presented. Jim Badowich seconded the motion. A roll call vote was taken. ***The case was approved: 12 yes, 0 no, 0 abstaining, 5 not present.***

9. Case 14-03: Updates to Guardrail Details.

   Make revisions to Section 415 and/or include guardrail details in MAG. Bob Herz said there were no changes since the last meeting since Maricopa County hasn't revised their details yet.

10. Case 14-05: Revisions to Section 324 Portland Cement Concrete Pavement (PCCP).

    Use compressive rather than tensile strength tests, modernize and reorganize section as needed. Jeff Hearne said he received revisions from Bob Herz prior to the meeting. Mr. Hearne said most of them were editorial, only a couple changes were substantive. Mr. Herz had a change to the second paragraph of 324.3.5 to make sure that the contractor does not change how the construction joints are placed, but go back to a previous joint. In another section he wanted to make it clear details can be shown on the plan documents. Julie Christoph asked that these changes be shown on a final clean copy for members to review before voting. Mr. Hearne agreed to make the changes available and postpone a vote until next month.

11. Case 14-06: Revisions to Section 718 Preservative Seal for Asphalt Concrete.

    Update the specifications for the Type C preservative seal. Jeff Benedict said this case was discussed at the last asphalt working group meeting, attended by Sam Haddenson of Western Refining. Mr. Haddenson volunteered to review and update the specification, but it was determined that a full rewrite would be required. The revised spec will include the most commonly used products based on a poll of MAG agencies. Mr. Benedict said a couple products are no longer used and a couple new items will be added. The case will be discussed at the next asphalt working group meeting.

12. Case 14-07: Revision to Section 735 Reinforced Concrete Pipe and Section 618 Storm Drain Construction.

    Add Elliptical and Arch Reinforced Concrete Pipe. Bob Herz said he has not received any comments, and asked if there were any. Seeing none, he moved to approve Case 14-07 as presented. Gregory Arrington seconded the motion. A roll call vote was taken. ***The case was approved: 12 yes, 0 no, 0 abstaining, 5 not present.***

13. Case 14-08: New Section 607: Trenchless Installation of Smooth Wall Jacking Pipe.

    Included are revisions to Section 618: Storm Drain Construction. Jim Badowich said a revised version of Section 607 was handed out at their place. The only revision was to add other materials which could be used as casing. Bob Herz said the case also needed to include changes to Section 618.4 that deleted the old information and referenced the new Section 607. Arvid Veidmark agreed that the case included the revision to 618.4. Bob Herz suggested rewording 607.2 MATERIALS section to make concrete pipe the default. The revised language would read, "The jacking pipe shall be tongue and groove smooth wall reinforced concrete pipe per ASTM C76 class V unless vitrified clay pipe per ASTM C1208 or centrifugally cast fiberglass reinforced polymer mortar pipe per ASTM D3262 is approved by engineer."

    Jim Badowich moved to approve Case 14-07 with the changes noted above. Syd Anderson seconded the motion. A roll call vote was taken. ***The case was approved: 12 yes, 0 no, 0 abstaining, 5 not present.***

14. Case 14-09: Revision to Section 726 Concrete Curing Materials.

    Replace discontinued AASHTO references with current ASTM standards. Bob Herz said the case replaced obsolete AASHTO standards with the current ASTM specification. Seeing no further comments, Mr. Herz moved to approve Case 14-09 as presented. Warren White seconded the motion. A roll call vote was taken. ***The case was approved: 12 yes, 0 no, 0 abstaining, 5 not present.***

15. Case 14-10: Include Language to Allow Use of Warm Mix Asphalt.

Update Sections 321 and 710. Jeff Benedict said the version in the packet includes comments received during the last meeting and was discussed during the last asphalt working group meeting. He said he received comments from MCDOT which improved the formatting of the tables and changes to Section 710. Adrian Green said there were questions about what happens after an additive is included regarding times and temperatures. The case is planned to be discussed further at the next asphalt working group meeting. He asked members to email Jeff Benedict with questions and comments prior to the next working group meeting.

16. New Cases

Tom Wilhite said there were five new cases, and asked sponsors to introduce them.

17. Case 14-11: Delete the use of Asbestos-Cement Pipe in Valve Box Installations.

Replace ACP with PVC C900 pipe in Detail 391-2 and make associated drawing changes to Details 391-1 and 392. Also update Section 610.7. Bob Herz introduced a new case to eliminate the use of asbestos-cement pipe because it is a hazardous material. The revision is based on the City of Phoenix Detail P1391 and makes 8" C900 PVC as the default sleeve in the revised Detail 391-2. Several agency members commented that other materials besides C900 PVC can be used, citing several examples. Mr. Herz asked if the sleeve fits in a grove of the present base. Paul Nebeker said that it does fit in the precast bases. Mr. Herz asked if bricks should be deleted as an alternative, and members agreed. He asked for feedback on Note #1 on Detail 392 regarding the required loading rate. He also asked about Note #2 on Detail 391-2 regarding how the joints are bonded together. Jami Erickson suggested using Phoenix's language for gluing the PVC joints together. Mr. Nebeker said the Phoenix method worked well. Mr. Herz asked members to review the proposed changes and send him any additional comments.

18. Case 14-12: Proposed Revisions to Sections 336.3 and 336.4.

Add pavement removal criteria to prevent full depth pavement cuts from being located within a lane wheel path and to prevent creation of narrow pavement edge strips. Bob Herz said the case was developed to add criteria to avoid full cut depths in the lane wheel path. The proposed case was discussed at the last asphalt working group meeting, and one potential problem was that the 2' minimum saw cut for curb replacement often ends up in the wheel path. The case tries to take this into account. Brian Gallimore said moving it to 4' can put it in the travel lane which could cause bumps if not constructed properly.

Jim Badowich suggested adding an option to 200-1 for patching milled areas which is now required when plating is done.

19. Case 14-13: Revisions to Section 321. Incorporate MCDOT Supplements.

Incorporate MCDOT enhancements to Section 321 PLACEMENT AND CONSTRUCTION OF ASPHALT CONCRETE PAVEMENT into the MAG Specifications. Bob Herz handed out a new case to modify Section 321. He said a list of the changes was outlined in the cover memo. The memo was followed by a strike-out version and a clean copy for members to review. He said this would continue to be a topic at the asphalt working group meetings and encouraged members to provide feedback and attend the meeting if possible.

20. Case 14-14: Consolidate all testing requirements in a new Section 611.

Create a new Section 611 and update existing specifications to delete testing specs and refer to the appropriate information in new Section 611. Jami Erickson handed out a proposed new case to consolidate testing requirements related to pipe installation into one section for easier reference. She reviewed what subsections were removed from current specifications and where they were placed in the new one. There was no change in the payment requirements. She said deflection testing for storm drains will be added in 611.4, and that this was the only new item, the rest of the case is just reorganizing existing specifications. Bob Herz commented that any revisions to 610.4 in Case 14-15 would need to be including in this one.

21. Case 14-15: Updates and revisions to Section 610.

Move Hydrostatic Testing from Section 610 to Section 611, update Table 610-1 to be consistent with AWWA, place Section 610 into sequential order. Jim Badowich introduced a new case from the water/sewer working group to make changes to Section 610. This case was supported by the work of Rob Godwin of Goodyear. One of the changes was to update the table of polywrap sizes to match those currently manufactured. Mr. Herz suggested removing the year from the ASTM standard reference so it stays up-to-date. Jami Erickson said they had issues with developers not using polywrap and asked if it should be required. Most agencies currently do require it, although Mr. Badowich questioned whether it was really needed unless alkaline soil types created the necessity.

Mr. Veidmark said you don't want to use polywap inside casing. Mr. Herandez commented on some jobs they did using casing. Mr. Veidmark said the Union Pacific Railroad prompted ADOT to update their policy to leave the casing area empty so to would be easier to add a vent or allow easier repairs in the future.

22. Working Group Reports

Chair Wilhite asked for reports from the working group chairs.

a. **Water/Sewer Issues Working Group**
Mr. Badowich said the group met on May 20th, and that most of their work was previously mentioned in the case discussions. He said they did a lot of work on the manholes case, and also are working on a new Section 608 for Horizontal Directional Drilling. Arvid Veidmark commented that he met with representatives from ASU and

industry and got valuable feedback. He hopes to introduce it as a new case at the next committee meeting. Mr. Badowich said the next meeting is scheduled for June 17th at 1:30 p.m. in the MAG office.

b. **Asphalt/Materials Working Groups**
Jeff Benedict said the notes from the previous meeting are in the packet. The next asphalt/materials working group meeting is planned for June 26th at the ARPA office at noon, and lunch will be provided. Brian Gallimore said the materials group would meet after the asphalt and that he planned to have a rough draft of Section 301 and 310 regarding rock correction procedures ready for discussion.

c. **Concrete Working Group**
The concrete working group followed the Asphalt/Materials working group meeting on May 22nd. Mr. Hearne said they continued working on revisions to *Section 725 Portland Cement Concrete*. He thought it would probably not be ready as a case until next year. Mr. Hearne said the next Concrete working group meeting would follow the Asphalt/Materials group on June 26th.

d. **Outside Right-of-Way Working Group**
Peter Kandaris said he hoped to attend working group meetings next month and get feedback from the groups on specifications to be included in the Outside Right-of-Way document.

23. General Discussion

Chair Wilhite asked members for their thoughts on moving the July 2nd, committee meeting one week later to July 9th, due to the holiday weekend. Most members preferred the later date. Mr. White said he would be unable to attend on either day, and Mr. Kandaris said he would probably call in if it was moved to the 9th. Since the consensus of the members was to move the meeting date to July 9th, Mr. Wilhite said that it would be rescheduled. He asked if any members could not attend to please let him know and to try and have a representative there so that the meeting meets quorum requirements.

Gordon Tyus asked members their thoughts on producing a new edition of the specs and details book in 2015 rather than another revision update. He said if all the cases currently under discussion pass, this would be a major update to the book. He said there also have been large revision packets during the last two years. When creating a new edition in 2012, members agreed that it made sense to release new editions more frequently. Since the cost of three update packets is about the same as a new book, the economic advantage of smaller revisions is also less important.

Mr. Tyus said they currently have sold out of the hard copies of specs and details book, and wanted to get feedback from the committee on whether a new edition was warranted, before ordering additional books that may not be current in six months. The consensus of the group

and chair was to go ahead and plan on creating a new edition for 2015, based on the expectation that many of the existing active cases will be approved.

Mr. Tyus also discussed different ideas for electronic and hard copy publishing. Some ideas included on-demand publishing rather than MAG keeping an inventory of hard cover books, using three-ring binding, electronic only publishing, and publishing as a paid mobile application that automatically updates.

Warren White said the Arizona Utility Coordinating Committee began discussing new policies for utility abandonment, and wanted committee members to be aware of this fact.

24. Adjournment:

Seeing no further business the meeting was adjourned at 4:03 p.m.

2014 PROPOSED REVISIONS TO MAG SPECIFICATIONS AND DETAILS

(Updated information can be found on the website: http://www.azmag.gov/Projects/Project.asp?CMSID=1055&CMSID2=5827)

CASE	DESCRIPTION	PROPOSED BY	MEMBER	SUBMITTAL DATE Last Revision	VOTE DATE	VOTE	
	CARRY FORWARD CASES FROM 2013						
13-15	Case 13-15: Revisions to MAG Sections 101, 601, 603, 615 and 618 for installing rigid and flexible pipe. Update Detail 200-1 and 200-2.	Chandler/ Water-Sewer WG	Warren White	05/01/2013 07/09/2014		0 0 0	Yes No Abstain
13-21	Case 13-21: Create a new Section 742 Pre Cast Manhole Bases. Add detail drawings for construction and installation. Update existing manhole details.	Buckeye/ Water-Sewer WG	Craig Sharp	06/05/2013 07/01/2014		0 0 0	Yes No Abstain
13-22	Case 13-22: Update Sections 625 and 775 to remove references to steps and the use of bricks in manholes.	Buckeye/ Water-Sewer WG	Craig Sharp	06/05/2013 07/01/2014		0 0 0	Yes No Abstain
	NEW CASES FOR 2014						
14-01	Case 14-01: Miscellaneous Corrections: A. Change “transverse” to “longitudinal” in Section 321.8.2. B. In section 739.1 delete the extra occurrence of the word ‘Pipe’. C. Delete “OR BRICK” from the title of Section 342.	Scottsdale	Rod Ramos Bob Herz	01/08/2014 06/04/2014		0 0 0	Yes No Abstain
14-02	Case 14-02: Revision to Section 405 Monuments. Update specification to match current details and requirements.	MCDOT	Bob Herz	01/08/2014 05/08/2014	06/04/2014	12 0 0	Yes No Abstain
14-03	Case 14-03: Updates to Guardrail Details. Revisions to Section 415 and/or inclusion of MCDOT guardrail details.	MCDOT	Bob Herz	01/08/2014		0 0 0	Yes No Abstain
14-04	Case 14-04: Revision to Detail 552 Concrete Cut-off Walls. Move cut-off walls away from roadway edge and delete design related notes.	MCDOT	Bob Herz	01/08/2014 02/20/2014	05/07/2014	12 0 1	Yes No Abstain
14-05	Case 14-05: Revisions to Section 324 Portland Cement Concrete Pavement.	Concrete WG	Jeff Hearne	02/05/2014 06/04/2014	07/09/2014	0 0 0	Yes No Abstain

2014 PROPOSED REVISIONS TO MAG SPECIFICATIONS AND DETAILS

(Updated information can be found on the website: http://www.azmag.gov/Projects/Project.asp?CMSID=1055&CMSID2=5827)

CASE	DESCRIPTION	PROPOSED BY	MEMBER	SUBMITTAL DATE Last Revision	VOTE DATE	VOTE	
14-06	Case 14-06: Revisions to Section 718 Preservative Seal for Asphalt Concrete.	Asphalt WG	Jeff Benedict	02/05/2014		0 0 0	Yes No Abstain
14-07	Case 14-07: Revision to Section 735 Reinforced Concrete Pipe and Section 618 Storm Drain Construction. Add Elliptical and Arch Reinforced Concrete Pipe.	MCDOT	Bob Herz	04/02/2014	06/04/2014	12 0 0	Yes No Abstain
14-08	Case 14-08: New Section 607: Trenchless Installation of Smooth Wall Jacking Pipe. Includes Revisions to Section 618: Storm Drain Construction.	Water/Sewer WG	Jim Badowich	04/02/2014 06/04/2014	06/04/2014	12 0 0	Yes No Abstain
14-09	Case 14-09: Revision to Section 726 Concrete Curing Materials. Replace discontinued AASHTO references with current ASTM standards.	MCDOT	Bob Herz	04/02/2014	06/04/2014	12 0 0	Yes No Abstain
14-10	Case 14-10: Include Language to Allow Use of Warm Mix Asphalt. Update Sections 321 and 710.	Asphalt WG	Jeff Benedict	05/07/2014 06/30/2014		0 0 0	Yes No Abstain
14-11	Case 14-11: Delete the use of Asbestos-Cement Pipe in Valve Box Installations.	MCDOT	Bob Herz	06/04/2014		0 0 0	Yes No Abstain
14-12	Case 14-12: Proposed Revisions to Sections 336.3 and 336.4. Add pavement removal criteria to prevent full depth pavement cuts from being located within a lane wheel path and to prevent creation of narrow pavement edge strips.	MCDOT	Bob Herz	06/04/2014		0 0 0	Yes No Abstain
14-13	Case 14-13: Revisions to Section 321. Incorporate MCDOT enhancements to Section 321 PLACEMENT AND CONSTRUCTION OF ASPHALT CONCRETE PAVEMENT into the MAG Specifications.	MCDOT	Bob Herz	06/04/2014		0 0 0	Yes No Abstain
14-14	Case 14-14: Consolidate all testing requirements in a new Section 611.	Phoenix	Jami Erickson	06/04/2014		0 0 0	Yes No Abstain

2014 PROPOSED REVISIONS TO MAG SPECIFICATIONS AND DETAILS

(Updated information can be found on the website: http://www.azmag.gov/Projects/Project.asp?CMSID=1055&CMSID2=5827)

CASE	DESCRIPTION	PROPOSED BY	MEMBER	SUBMITTAL DATE Last Revision	VOTE DATE	VOTE	
14-15	Case 14-15: Move Hydrostatic Testing from Section 610 to Section 611; update Table 610-1 consistent with AWWA; place Section 610 into sequential order.	Water/Sewer WG	Jim Badowich	06/04/2014		0 0 0	Yes No Abstain
14-16	Case 14-16: Revision to Section 310 - Placement of Construction of Aggregate Base Course. Change rock correction method to be consistent with Section 301.	Materials WG	Brian Gallimore	07/09/2014		0 0 0	Yes No Abstain
14-17	Case 14-17: Create New Section 322 Asphalt Stamping. Provide specifications for materials and methods.	Materials WG	Brian Gallimore	07/09/2014		0 0 0	Yes No Abstain
14-18	Case 14-18: Change all occurrences of the term “sidewalk ramp” in section 340 to “curb ramp” to prevent confusion.	MCDOT	Bob Herz	07/09/2014		0 0 0	Yes No Abstain

Chandler • Arizona
Where Values Make The Difference

MEMORANDUM **Case # 13-15**

DATE: July 9th, 2014

TO: MAG Specifications and Details Committee Members

FROM: Warren White, City of Chandler Representative

SUBJECT: Status Update on Proposed Revisions to MAG Sections 101, 601, 603, 615, 618, and Detail 200

Revisions since June Meeting packet include:

1) Section 101: Definitions
   - No changes from June packet.

2) Section 601: Rigid Pipe Trench Excavation, Backfilling and Compaction
   - 601.2.2 – revised last paragraph related to max trench widths.
   - 601.2.5 – changed rock to "bedrock".
   - 601.4.3 & 601.4.4 – changed max lifts from 4' to **2**' and revised backfill material statement slightly.
   - 601.4.6 – revised table 601-2 for Type II to require 95%.
   - 601.4.7 – revised jetting section for testing requirements and if compaction is not achieved.
   - 601.4.8 – kept existing definition for granular material. Needed because used elsewhere in spec.

3) Section 603: Flexible Pipe Trench Excavation, Backfilling and Compaction
   - Same revisions as 601 with the following exceptions.
   - 603.2.2 – revised trench width requirements to simply use the table 603-1, consistent with 601.
   - 601.4.3 & 601.4.4 – changed max lifts from 4' to **1**' and revised backfill material statement slightly bringing back the option for native.

4) Section 615: Sewer Line Construction
   - No changes from June packet.

5) Section 618: Storm Drain Construction
   - 601.3 – added approved Case 14-08 statement for trenchless installations.

6) Detail 200-1 and 200-2: Backfill, Pavement and Surface Replacement
   - No changes from June packet.

SECTION 601

RIGID PIPE TRENCH EXCAVATION, BACKFILLING AND COMPACTION

601.1 DESCRIPTION:

The work covered by this specification consists of furnishing all plant, labor, equipment, appliances and materials, and performing all operations in connection with the trench excavation, ~~and~~ backfilling and compaction of trenches for a single rigid pipe installation in accordance with the plans and special provisions.~~, except for the installation of high density polyethylene pipe (HDPE).~~ Pipe materials that are considered to be rigid include reinforced concrete pipe, non-reinforced concrete pipe, cast-in-place concrete pipe, reinforced concrete cylinder pipe, vitrified clay pipe and ductile iron pipe. All other pipe materials are considered flexible pipe. See Section 603 for trench excavation, backfilling, and compaction of flexible pipe.

The Trench Cross-Section Detail shown on Detail 200-2 illustrates the terminology used in this specification.

See Section 615 for sewer line construction procedures.

See Section 618 for storm drain construction procedures.
~~See Section 603 for trench excavation, backfilling, and compaction of HDPE pipe.~~

Excavation for appurtenance structures, such as manholes, inlets, transition structures, junction structures, vaults, valve boxes, catch basins, etc., shall be deemed to be in the category of trench excavation.

See Section 602 for trenchless installations.

601.2 EXCAVATION:

601.2.1 General: The Contractor shall perform all excavation of every description and of whatever substances encountered, to the depths indicated on the plans, and including excavation ordered by the Engineer of compacted backfill for the purpose of making density tests on any portion of the backfill.

All excavation shall be open cut unless otherwise shown on the plans or approved by the Engineer.

601.2.2 Trench Widths: Trenches for other than cast-in-place concrete pipe shall conform to the dimensions in Table 601-1, unless otherwise specified in the special provisions, indicated on the plans, and/or approved by the Engineer.

~~TABLE 601-1~~		
~~TRENCH WIDTHS~~		
~~Size Of Pipe (I.D.)~~	~~Maximum Width At Top Of Pipe Greater Than O.D. Of Barrel~~	~~Minimum Width At Springline Each Side of Pipe (1)~~
~~Less than 18 inches~~	~~16 inches~~	~~6 inches~~
~~18 inches to 24 inches inclusive~~	~~19 inches~~	~~7 ½ inches~~
~~27 inches to 39 inches inclusive~~	~~22 inches~~	~~9 inches~~
~~42 inches to 60 inches inclusive~~	~~½ O.D.~~	~~12 inches~~
~~Over 60 inches~~	~~36 inches~~	~~12 inches~~

Table 601-1		
Size of Pipe (Nom. Dia.)	**Maximum Width At Top Of Pipe Greater Than O.D. Of Bell**	**Minimum Width At Springline Each Side of Pipe (1)**
Less than 18 inches	16 inches	6 inches
18 inches to 24 inches inclusive	19 inches	7.5 inches
27 inches to 39 inches inclusive	22 inches	9 inches
42 inches to 60 inches inclusive	30 inches	12 inches

66 inches to 78 inches inclusive	42 inches	15 inches
84 inches to 96 inches inclusive	50 inches	19 inches
102 inches to 120 inches inclusive	60 inches	24 inches

(1) When the specified compaction cannot be obtained in the haunch area and/or ~~bedding~~ initial backfill zone, the Contractor shall make necessary changes in his methods and/or equipment to obtain the desired results. In some instances, the Minimum Width at Springline shall be adjusted wider to assist the Contractor in obtaining the compaction. The Engineer must be satisfied with the Contractor's compaction effort, concur with the change and approve the revised distance. There shall be no additional cost to the Agency for the extra trench width.

For multiple pipe installations in a single trench, the Engineer shall provide details on the plans or in the Special/Technical Provisions as to the layout, pipe configuration, distances between pipes and trench walls, the type of backfill~~, bedding~~ and bedding ~~foundation~~ materials, etc.

The width of the trench shall not be greater than the maximum indicated in Table 601-1, at and below the level of the top of the pipe. The width of the trench above that level may be made as wide as necessary for sheeting and bracing, and for proper installation of the work.

If the maximum trench width as specified in Table 601-1 is exceeded at the top of the pipe the Contractor shall provide, at no additional cost to the Contracting Agency, the necessary additional load bearing capacity by means of ~~bedding~~initial backfill, having a higher bedding factor than that specified, higher strength pipe, a concrete cradle, cap or encasement, or by other means approved in writing by the Engineer. Where safety or undermining situations occur, a CLSM backfill may be used as needed.

601.2.3 Trench Grade: Alignment and elevation stakes shall be furnished the Contractor at set intervals and agreed upon offsets. On water main projects, elevation stakes will be furnished only when deemed necessary by~~-~~ the Engineer. In all cases where elevation stakes are furnished, the Engineer will also furnish the Contractor with cut sheets.

For all pipe 12 inches or greater in diameter, the Contractor shall excavate for and provide an initial granular bedding at least 4 inches thick or 1/12 the O.D. of the pipe whichever is greater. This bedding material shall be placed at a uniform density with specified ~~minimum~~ compaction and fine graded as specified below.

Bell or coupling holes shall be dug after the trench bottom has been graded. Such holes shall be of sufficient width to provide ample room for caulking, banding, or bolting. Holes shall be excavated only as necessary to permit accurate work in the making of the joints and to insure that the pipe will rest upon the prepared bottom of the trench, and not be supported by any portion of the joint.

Depressions for joints, other than bell-and-spigot, shall be made in accordance with the recommendations of the joint manufacturer for the particular joint used.

601.2.4 Fine Grading: Unless otherwise specified in the plans and/or special provisions, the bottom of the trench shall be accurately graded to provide uniform bearing and support for each section of the pipe at every point along its entire length, except for portions of the pipe where it is necessary to excavate for bells and for proper sealing of the pipe joints.

601.2.5 Overexcavation: Except at locations where excavation of rock from the bottom of the trench is required, care shall be taken not to excavate below the depth indicated.

Unauthorized excavation below the specified grade line shall be refilled at the Contractor's expense with ABC material compacted to a uniform density of not less than 95 percent of the maximum density as determined by AASHTO T-99 and T-191 or ASTM D6938. When AASHTO T-99, method A or B, and T-191 are used for density determination, ARIZ 227c will be used for rock correction.

Whenever bedrock is encountered in the trench bottom, it shall be overexcavated to a minimum depth of six inches below the O.D. of the pipe. This overexcavation shall be filled with granular material placed with the minimum possible compaction.

Whenever unsuitable soil incapable of supporting the pipe is encountered, the Contractor will notify the Engineer and a field determination will be made as to the depth of overexcavation and the granular fill required.

601.2.6 Excavation for Manholes, Valves, Inlets, Catch Basins and Other Accessories: The Contractor may excavate to place the concrete structure directly against the excavated surface, provided that the faces of the excavation are firm and unyielding and are at all points outside the structure lines shown on the plans. If the native material is such that it will not stand without sloughing or if precast structures are used, the Contractor shall overexcavate to place the structure and this overexcavation shall be backfilled with the same material required for the adjoining pipe line trench and compacted per Table 601-2.

Any unnecessary excavation below the elevation indicated for the foundation of any structure shall be replaced with the same class of concrete specified for the structure or with 1 ½ sack controlled low strength material as specified in Section 728. When the replacement material is structural concrete, the material shall be placed at the same time as the structure. However, when using 1 ½ sack controlled low strength material, placement of the material shall be per Section 604 which will require a time lag between the material and the structural concrete. The placement of the additional material shall be at no cost to the Agency.

601.2.7 Pavement and Concrete Cutting and Removal: Where trenches lie within the Portland cement concrete section of streets, alleys, driveways, or sidewalks, etc., such concrete shall be sawcut to neat, vertical, true lines in such a manner that the adjoining surface will not be damaged. The minimum depth of cut shall be 1 ½ inches or 1/4 of the thickness, whichever is greater.

Asphalt pavement shall be clean-cut, with approved equipment and by approved methods in accordance with the requirements of Section 336.

No ripping or rooting will be permitted outside limits of cuts. Surfacing materials removed shall be hauled from the job site immediately, and will not be permitted in the backfill.

See Detail 200-1 and 200-2 for further requirements.

601.2.8 Grading and Stockpiling: All grading in the vicinity of trench excavation shall be controlled to prevent surface water from flowing into the trenches. Any water accumulated in the trenches shall be removed by pumping or by other approved methods.

During excavation, material suitable for backfilling shall be piled in an orderly manner, a sufficient distance back from the edges of trenches, to avoid overloading and to prevent slides or cave-ins. Material unsuitable for backfilling, or excess material, shall be hauled from the job site and disposed of by the Contractor.

The Contractor shall, prior to ~~final acceptance~~commencement of the work, submit a letter to the Contracting Agency stating the location of each disposal site for all excess or unsuitable material and certify that he has obtained the property owner's permission for the disposal of all such materials.

Where the plans and/or special provisions provide for segregation of topsoil from underlying material for purposes of backfill, the material shall not be mixed.

601.2.9 Shoring and Sheeting: The Contractor shall do such trench bracing, sheathing, or shoring necessary to perform and protect the excavation as required for safety and conformance to governing laws. The bracing, sheathing, or shoring shall not be removed in one operation but shall be done in successive stages as determined by the Engineer to prevent overloading of the pipe during backfilling operations. The cost of the bracing, sheathing, or shoring, and the removal of same, shall be included in the unit price for the pipe.

All shoring and sheeting deemed necessary to protect the excavation and to safeguard employees, shall be installed. See Section 107.

601.2.10 Open Trench: Except where otherwise noted in the special provisions, or approved in writing by the Engineer, the maximum length of open trench, where the construction is in any stage of completion (excavation, pipe laying or backfilling), shall not exceed 1320 feet in the aggregate at any one location.

Any excavated area shall be considered open trench until all ABC for pavement replacement has been placed and compacted. With the approval of the Engineer, pipe laying may be carried on at more than one separate location, the restrictions on open trench applying to each location. Trenches across streets shall be completely backfilled as soon as possible after pipe laying.

Substantial steel plates with adequate trench bracing shall be used to bridge across trenches at street crossings where trench backfill and temporary patches have not been completed during regular work hours. Steel plates shall be installed in accordance with Detail 211. Safe and convenient passage for pedestrians shall be provided. The Engineer may designate a passage to be provided at any point he deems necessary. Access to hospitals, fire stations and fire hydrants must be maintained at all times.

601.3 PROTECTION OF EXISTING UTILITIES:

601.3.1 Utilities: Unless otherwise shown on the plans or stated in the specifications, all utilities, either underground or overhead, shall be maintained in continuous service throughout the entire contract period. The Contractor shall be responsible and liable for any damages to or interruption of service caused by the construction.

If the Contractor desires to simplify his operation by temporarily or permanently relocating or shutting down any utility or appurtenance, he shall make the necessary arrangements and agreements with the owner and shall be completely responsible for all costs concerned with the relocation or shutdown and reconstruction. All property shall be reconstructed in its original or new location as soon as possible and to a condition at least as good as its previous condition. This cycle of relocation or shutdown and reconstruction shall be subject to inspection and approval by both the Engineer and the owner of the utility.

The Contractor shall be entirely responsible for safeguarding and maintaining all conflicting utilities that are shown on the plans (Sections 107 and 105 apply). This includes overhead wires and cables and their supporting poles whether they are inside or outside of the open trench. If, in the course of work, a conflicting utility line that was not shown on the plans is discovered, the Contracting Agency will either negotiate with the owner for relocation, relocate the utility, change the alignment and grade of the trench or as a last resort, declare the conflict as “extra work” to be accomplished by the Contractor in accordance with Section 104.

601.3.2 Irrigation Ditches, Pipes and Structures: The Contractor shall contact the owners of all irrigation facilities, and make arrangements for necessary construction clearances and/or dry-up periods.

All irrigation ditches, dikes, headgates, pipe, valves, checks, etc., damaged or removed by the Contractor, shall be restored to their original condition or better, by the Contractor at no additional cost to the Contracting Agency.

601.3.3 Building, Foundations and Structures: Where trenches are located adjacent to building, foundations, and structures, the Contractor shall take all necessary precaution against damage to them. The Contractor shall be liable for any damage caused by the construction.

Except where authorized in the special provisions or in writing by the Engineer, water settling of backfill material in trenches adjacent to structures will not be permitted.

601.3.4 Permanent Pipe Supports: Permanent pipe supports for the various types and sizes of sewer, water and utility lines shall conform to the Standard Details or the details shown on the plans. Such pipe supports shall be erected at the locations shown on the plans and/or at any other locations as necessary as determined by the Engineer.

~~**601.3.5 Electronic, Telephonic, Telegraphic, Electrical, Oil and Gas Lines:** These underground facilities shall be adequately supported by the Contractor. Support for plastic pipes shall be continuous along the bottom of the pipe. Support for metal pipe and electrical conduit may be continuous or nylon webbing may be used for suspension at no greater than ten-foot intervals.~~

~~The Contractor shall avoid damaging the plastic pipe, pipeways or conduits during trench backfilling and during foundation and bedding placement.~~

~~There will be no measurement or payment for this work. The Contractor will include all associated costs in the unit price for the conduit installation.~~

601.4 FOUNDATION, BEDDING, HAUNCHING, BACKFILLING AND COMPACTION:

601.4.1 Foundation: The native or prepared material (when required) upon which the bedding material is placed.

601.4.~~1~~ 2 ~~Foundation~~Bedding: The material upon which the conduit or structure is to be placed shall be accurately finished to the grade or dimensions shown on the plans or as directed by the Engineer. The bottom portion of the trench shall be brought to grade so that the conduit or structure will be continuously in contact with the material on which it is being placed. If rocky or unsuitable soil is encountered, Subsection 601.2.5 applies.

Unless otherwise specified in the project plans or project specifications, the minimum material type shall be A.B.C. per Section 702.

601.4.~~2~~ 3 ~~Bedding~~Haunching: ~~Bedding s~~The material placed between the bedding and springline shall be constructed using the specified material and compacted for the full length of the pipe so as to distribute the load-bearing reaction uniformly to the bedding. If placed in lifts, the thickness shall not exceed 2 feet and shall be deposited and compacted to the specified density uniformly on each side of the pipe to prevent lateral displacement of the pipe. Compaction requirements shall be per Section 601.4.6. ~~hall consist of granular material containing no pieces larger than 1 ½ inches and free of broken concrete, broken pavement, wood or other deleterious material. Open graded rock will not be used without the written approval of the Engineer.~~

~~Where water consolidation is used, bedding for conduits, 24 inches or less in I.D., may be placed in one lift. For larger conduits the first lift shall not exceed the springline of the pipe.~~

~~Where mechanical compaction is used, t~~The moisture content shall be such that the specified compaction can be obtained. ~~The first lift shall be 8 inches or two thirds of the distance to the springline whichever is greater. Succeeding lifts shall not exceed 2 feet loose and extreme care will be taken to prevent damage to or movement of the conduit by the compaction equipment.~~

Unless otherwise specified in the project plans or project specifications, the minimum material type shall be A.B.C. per Section 702. With agency approval, native or CLSM may be used as an option.

601.4.~~3~~ 4 ~~Backfill~~Initial Backfill: The material placed between the springline to 12 inches above top of pipe (minimum)~~Backfill shall be sound earthen material free from broken concrete, broken pavement, wood or other deleterious material. Unless otherwise specified, this may be native material with no piece larger than 4 inches, select material or aggregate base course.~~ shall be placed in lifts the height of which shall not exceed 2 feet or that which can be effectively compacted depending on the type of material, type of equipment and methods used. Compaction requirements shall be per Section 601.4.6. The moisture content shall be such that the specified compaction can be obtained.~~Backfill under street pavement shall be constructed per Detail 200-1 with the type of replacement noted on the plans or in the special provisions. Unless otherwise noted, backfill under single curb, curb and gutter, sidewalk, driveways, valley gutters, etc. shall be the same as the adjacent street pavement.~~

Unless otherwise specified in the project plans or project specifications, the minimum material type shall be A.B.C. per Section 702. With agency approval, native or CLSM may be used as an option.

Backfill, around utilities that are exposed during trench excavation, shall be placed in accordance with the ~~bedding~~ bedding methods.

601.4.5 Final Backfill: The material placed above the initial backfill shall be placed in lifts the height of which shall not exceed that which can be effectively compacted depending on the type of material, type of equipment and methods used, and under no circumstances shall exceed 4 feet. Compaction requirements shall be per Section 601.4.6. All backfill shall be constructed per Detail 200-1 with the type of replacement noted on the plans or in the special provisions. Unless otherwise noted, backfill under single curb, curb and gutter, sidewalk, driveways, valley gutters, etc. shall be the same as the adjacent street pavement.~~Where water consolidation is used, backfill will be placed in lifts as required in the following table prior to settlement.~~

~~Trench Width~~	~~Backfill Lifts~~
~~18" to 24"~~	~~Not to exceed 4'~~
~~25" to 36"~~	~~Not to exceed 6'~~
~~Over 36"~~	~~Not to exceed 8'~~

~~The above backfill lift limitations are not applicable when water saturation is done by the jetting method.~~

~~Where mechanical compaction is used, backfill shall be placed in lifts the height of which shall not exceed that which can be effectively compacted depending on the type of material, type of equipment and methods used, and under no circumstances shall exceed 4 feet.~~

601.4.~~4~~ 6 Compaction Densities: Unless otherwise provided in the plans and/or special provisions, the trench backfill shall be thoroughly compacted to not less than the densities in Table 601-2 when tested and determined by AASHTO T-99 and T-191 or ASTM D6938. When AASHTO T-99, method A or B, and T-191 are used for density determination, ARIZ-227c will be used for rock correction. All compaction discussed within this section shall be performed within 2 percentage points of optimum moisture content unless otherwise noted in the project plans or project specifications.

The density required will depend on the Type shown on the plans and/or called for in the special provisions. Density required for each type shall comply with Table 601-2.

TABLE 601-2 MINIMUM TRENCH COMPACTION DENSITIES				
Backfill Type	**Location**	**From Surface To 2 feet Below Surface**	**From 2 feet Below Surface To 1 foot Above Top of Pipe**	**From 1 foot Above Top of Pipe to Bottom of ~~Trench~~Pipe**
I	Under any existing or proposed pavement, curb, gutter, attached sidewalk, roadway shoulders, and other areas within right-of-way subject to vehicular traffic~~or such construction included in the contract~~, or when any part of the trench excavation is within 2-feet of the existing pavement, curb, or gutter~~above~~.	100% for granular 95% for non-granular	~~90~~95%	~~90~~95%
II	On any utility easement ~~street, road~~ or ~~alley~~ right-of-way outside limits of Type I backfill.~~(I).~~	~~85~~95%	~~85~~95%	~~90~~95%
III	Around any structures (manholes, etc.) or exposed utilities.	95% for A.B.C., 100% for native ~~in all cases~~ or CLSM		

Note: The type required will generally be shown on the plans and the plans will govern. Where no type is shown on

the plans, the type shall comply with Table 601-2.

A consideration in determining the backfill Types as shown on the plans, is based on the trench widths as shown in the Contract Documents. If these trench widths increase beyond those widths referred to above and fall within the 2-foot limit of paved surfaces and other improvements due to construction exigencies, the backfill designation for that portion within the 2-foot limit of such improvements shall be Type I even though Type II backfill is shown on the plans.

601.4.~~5~~ 7 Compaction Methods: Unless otherwise specified in the plans and/or special provisions, the backfill material shall be uniformly compacted using mechanical work methods. When allowed by the agency, consolidation by jetting is also an acceptable compaction method; however, testing requirements shall be increased (100% increase per lift). Care will be taken to prevent damage to or movement of the conduit by the compaction method or equipment used.

Water consolidation by jetting shall be accomplished with a 1 ½ inches pipe of sufficient length to reach the bottom of the lift being settled with adequate hose attached and a water pressure of not less than 30 psi. All jetting shall be accomplished transversely across the trench at intervals of not more than 6 feet with the jetting locations on one side of the trench offset to the jetting locations on the other side of the trench. The entire lift shall be leveled and completely saturated working from the top to the bottom.

When ~~J~~jetting ~~shall be~~ is used within the haunching and initial backfill zones, ~~as the consolidation method for all conduit bedding. T~~the Contractor shall be entirely responsible for establishing each lift depth so as to avoid floating the conduit being placed and shall make any repair or replacement at no cost to the Contracting Agency. However, for conduit larger than 24 inches I.D. the first lift shall not exceed the springline of the conduit and subsequent lifts shall not exceed 3 feet.

Flooding is not acceptable as a water consolidation method unless authorized in the specification or by a written change order. It will consist of the inundation of the entire lift with water and then puddle with poles or bars to insure saturation of the entire lift.

Where jetting or flooding is utilized and the surrounding material is such that it does not permit proper drainage, the Contractor shall provide, at his expense a sump and a pump at the downstream end to remove the accumulated water.

The use of water consolidation does not relieve the Contractor from the responsibility to make his own determination that such methods will not result in damage to existing improvements. The Contractor shall be responsible for any damage incurred.

If water consolidation is not successful, mechanical compaction methods shall be used to meet the compaction requirements. Backfill material may need to be removed and replaced.

~~Where water consolidation is not permitted or does not result in adequate compaction, the backfill material shall be compacted with hand and/or mechanical work methods using equipment such as rollers, pneumatic tamps, and hydro hammers or other approved devices which secure uniform and required density without injury to the pipe or related structures.~~

Where Type I backfill is required, water consolidation ~~will not~~ shall only be permitted when the material in which the trench is located and the backfill are both ~~for non~~ granular material. ~~, except in the following situation. In a new development prior to paving and prior to opening the area to public traffic, water consolidation, will be permitted for non-granular material at the Contractor's discretion and responsibility.~~

No exception shall be made for construction within new developments.

601.4.~~6~~ 8 Specifications for Granular Material: For purposes of this specification, granular material shall mean material for which the sum of the plasticity index and the percent of the material passing a No. 200 sieve shall not exceed 23. The plasticity index shall be tested in accordance with AASHTO T-146 Method A (Wet Preparation), T-

89 and T-90.

601.4.~~7~~ 9 Rights-Of-Way Belonging to Others: Backfill and compaction for irrigation lines of the Salt River Valley Water Users' Association and Roosevelt Irrigation Districts and for trenches in State of Arizona and Maricopa County right-of-way outside the limits of the Contracting Agency shall be accomplished in accordance with their permit and/or specifications.

601.4.~~8~~ 10 Test Holes: Boring logs shown on the plans do not constitute a part of the contract and are included for the Contractor's convenience only. It is not intended to imply that the character of the material is the same as that shown on the logs at any point other than that where the boring was made. The Contractor shall satisfy himself regarding the character and amount of rock, gravel, sand, silt, clay and water to be encountered in the work to be performed.

601.4.~~9~~ 10 ~~Foundation and~~ Bedding and Backfilling for Electronic, Telephonic, Telegraphic, Electrical, Oil and Gas Lines: ~~Foundation and~~ The bedding and backfill for these underground facilities shall be native material or sand which conforms to the grading requirement of ASTM C33 for fine aggregate. When backfill material consists of aggregate base course, crushed stone, or other material containing stones, only sand will be used for foundation, and bedding. The ~~foundation~~ bedding depth shall be six inches and ~~bedding~~ backfill depth shall be one foot above the top of the facility. Compaction will be in accordance with Section 601.

601.5 CONTRACTOR CERTIFICATION OF INSTALLATION PROCEDURES:

When requested in the Special Provisions or by the Engineer prior to installation, the Contractor shall furnish to the Contracting Agency an affidavit (certification) from the pipe manufacturer (or his designee) stating that the Contractor is familiar with the manufacturer's suggested installation methods and procedures and the installation complies with those procedures and is consistent with MAG requirements.

Also, when required in the Special/Technical Provisions or requested by the Engineer, the pipe manufacturer or his designee will review the Contractor's methods and procedures for pipe installation in the field. The Contractor will make any adjustments in the installation as recommended by the manufacturer or his representative. If necessary, the Contractor may be required to reinstall or provide corrections to pipe installed prior to the field review at no cost to the Agency. Once the manufacturer or his representative has reviewed the Contractor's installation methods and the Contractor has adjusted his installation methods as recommended by the same, the manufacturer or his representative shall furnish to the Contracting Agency an affidavit (certification) that the Contractor's installation methods and procedures, at the time of the review, complied with the manufacturer's installation practices. The affidavit must provide the name of the manufacturer's representative witnessing the pipe installation.

601.6 PAVEMENT REPLACEMENT AND SURFACE RESTORATION:

601.6.1 Grading: The Contractor shall do such grading in the area adjacent to backfilled trenches and structures as may be necessary to leave the area in a neat and satisfactory condition approved by the Engineer.

601.6.2 Restoring Surface: All streets, alleys, driveways, sidewalks, curbs, or other surfaces, in which the surface is broken into or damaged by the installation of the new work, shall be resurfaced in kind or as specified to the satisfaction of the Engineer in accordance with Section 336.

601.6.3 Cleanup: The job site shall be left in a neat and acceptable condition. Excess soil, concrete, etc., shall be removed from the premises.

601.6.4 Temporary Pavement: The Contractor shall install temporary asphalt pavement or the first course of permanent pavement replacement in accordance with Section 336 immediately following backfilling and compaction of trenches that have been cut through existing pavement. Except as otherwise provided in Section 336, this preliminary pavement shall be maintained in a safe and reasonably smooth condition until required backfill compaction is obtained and final pavement replacement is ordered by the Engineer. Temporary paving removed shall be hauled from the job site and disposed of by the Contractor at no additional cost to the Contracting Agency.

601.7 PAYMENT:

No pay item will be included in the proposal, nor direct payment made for trench excavation, backfilling, compaction, or placement of temporary pavement. The cost of these features of the work shall be included in the unit price per linear foot for furnishing and laying pipe.

- End of Section -

SECTION 601

RIGID PIPE TRENCH EXCAVATION, BACKFILLING AND COMPACTION

601.1 DESCRIPTION:

The work covered by this specification consists of furnishing all plant, labor, equipment, appliances and materials, and performing all operations in connection with the trench excavation, backfilling and compaction of trenches for a single rigid pipe installation in accordance with the plans and special provisions. Pipe materials that are considered to be rigid include reinforced concrete pipe, non-reinforced concrete pipe, cast-in-place concrete pipe, reinforced concrete cylinder pipe, vitrified clay pipe and ductile iron pipe. All other pipe materials are considered flexible pipe. See Section 603 for trench excavation, backfilling, and compaction of flexible pipe.

The Trench Cross-Section Detail shown on Detail 200-2 illustrates the terminology used in this specification.

See Section 615 for sewer line construction procedures.

See Section 618 for storm drain construction procedures.

Excavation for appurtenance structures, such as manholes, inlets, transition structures, junction structures, vaults, valve boxes, catch basins, etc., shall be deemed to be in the category of trench excavation.

See Section 602 for trenchless installations.

601.2 EXCAVATION:

601.2.1 General: The Contractor shall perform all excavation of every description and of whatever substances encountered, to the depths indicated on the plans, and including excavation ordered by the Engineer of compacted backfill for the purpose of making density tests on any portion of the backfill.

All excavation shall be open cut unless otherwise shown on the plans or approved by the Engineer.

601.2.2 Trench Widths: Trenches for other than cast-in-place concrete pipe shall conform to the dimensions in Table 601-1, unless otherwise specified in the special provisions, indicated on the plans, and/or approved by the Engineer.

Table 601-1

Size of Pipe (Nom. Dia.)	Maximum Width At Top Of Pipe Greater Than O.D. Of Bell	Minimum Width At Springline Each Side of Pipe (1)
Less than 18 inches	16 inches	6 inches
18 inches to 24 inches inclusive	19 inches	7.5 inches
27 inches to 39 inches inclusive	22 inches	9 inches
42 inches to 60 inches inclusive	30 inches	12 inches
66 inches to 78 inches inclusive	42 inches	15 inches
84 inches to 96 inches inclusive	50 inches	19 inches
102 inches to 120 inches inclusive	60 inches	24 inches

(1) When the specified compaction cannot be obtained in the haunch area and/or initial backfill zone, the Contractor shall make necessary changes in his methods and/or equipment to obtain the desired results. In some instances, the Minimum Width at Springline shall be adjusted wider to assist the Contractor in obtaining the compaction. The Engineer must be satisfied with the Contractor's compaction effort, concur with the change and approve the revised distance. There shall be no additional cost to the Agency for the extra trench width.

For multiple pipe installations in a single trench, the Engineer shall provide details on the plans or in the Special/Technical Provisions as to the layout, pipe configuration, distances between pipes and trench walls, the type of backfill and bedding materials, etc.

The width of the trench shall not be greater than the maximum indicated in Table 601-1, at and below the level of the top of the pipe. The width of the trench above that level may be made as wide as necessary for sheeting and bracing, and for proper installation of the work.

If the maximum trench width as specified in Table 601-1 is exceeded at the top of the pipe the Contractor shall provide, at no additional cost to the Contracting Agency, the necessary additional load bearing capacity by means of initial backfill, having a higher bedding factor than that specified, higher strength pipe, a concrete cradle, cap or encasement, or by other means approved in writing by the Engineer. Where safety or undermining situations occur, a CLSM backfill may be used as needed.

601.2.3 Trench Grade: Alignment and elevation stakes shall be furnished the Contractor at set intervals and agreed upon offsets. On water main projects, elevation stakes will be furnished only when deemed necessary by the Engineer. In all cases where elevation stakes are furnished, the Engineer will also furnish the Contractor with cut sheets.

For all pipe 12 inches or greater in diameter, the Contractor shall excavate for and provide an initial granular bedding at least 4 inches thick or 1/12 the O.D. of the pipe whichever is greater. This bedding material shall be placed at a uniform density with specified compaction and fine graded as specified below.

Bell or coupling holes shall be dug after the trench bottom has been graded. Such holes shall be of sufficient width to provide ample room for caulking, banding, or bolting. Holes shall be excavated only as necessary to permit accurate work in the making of the joints and to insure that the pipe will rest upon the prepared bottom of the trench, and not be supported by any portion of the joint.

Depressions for joints, other than bell-and-spigot, shall be made in accordance with the recommendations of the joint manufacturer for the particular joint used.

601.2.4 Fine Grading: Unless otherwise specified in the plans and/or special provisions, the bottom of the trench shall be accurately graded to provide uniform bearing and support for each section of the pipe at every point along its entire length, except for portions of the pipe where it is necessary to excavate for bells and for proper sealing of the pipe joints.

601.2.5 Overexcavation: Except at locations where excavation of rock from the bottom of the trench is required, care shall be taken not to excavate below the depth indicated.

Unauthorized excavation below the specified grade line shall be refilled at the Contractor's expense with ABC material compacted to a uniform density of not less than 95 percent of the maximum density as determined by AASHTO T-99 and T-191 or ASTM D6938. When AASHTO T-99, method A or B, and T-191 are used for density determination, ARIZ 227c will be used for rock correction.

Whenever bedrock is encountered in the trench bottom, it shall be overexcavated to a minimum depth of six inches below the O.D. of the pipe. This overexcavation shall be filled with granular material placed with the minimum possible compaction.

Whenever unsuitable soil incapable of supporting the pipe is encountered, the Contractor will notify the Engineer and a field determination will be made as to the depth of overexcavation and the granular fill required.

601.2.6 Excavation for Manholes, Valves, Inlets, Catch Basins and Other Accessories: The Contractor may excavate to place the concrete structure directly against the excavated surface, provided that the faces of the excavation are firm and unyielding and are at all points outside the structure lines shown on the plans. If the native material is such that it will not stand without sloughing or if precast structures are used, the Contractor shall

overexcavate to place the structure and this overexcavation shall be backfilled with the same material required for the adjoining pipe line trench and compacted per Table 601-2.

Any unnecessary excavation below the elevation indicated for the foundation of any structure shall be replaced with the same class of concrete specified for the structure or with 1 ½ sack controlled low strength material as specified in Section 728. When the replacement material is structural concrete, the material shall be placed at the same time as the structure. However, when using 1 ½ sack controlled low strength material, placement of the material shall be per Section 604 which will require a time lag between the material and the structural concrete. The placement of the additional material shall be at no cost to the Agency.

601.2.7 Pavement and Concrete Cutting and Removal: Where trenches lie within the Portland cement concrete section of streets, alleys, driveways, or sidewalks, etc., such concrete shall be sawcut to neat, vertical, true lines in such a manner that the adjoining surface will not be damaged. The minimum depth of cut shall be 1 ½ inches or 1/4 of the thickness, whichever is greater.

Asphalt pavement shall be clean-cut, with approved equipment and by approved methods in accordance with the requirements of Section 336.

No ripping or rooting will be permitted outside limits of cuts. Surfacing materials removed shall be hauled from the job site immediately, and will not be permitted in the backfill.

See Detail 200-1 and 200-2 for further requirements.**601.2.8 Grading and Stockpiling:** All grading in the vicinity of trench excavation shall be controlled to prevent surface water from flowing into the trenches. Any water accumulated in the trenches shall be removed by pumping or by other approved methods.

During excavation, material suitable for backfilling shall be piled in an orderly manner, a sufficient distance back from the edges of trenches, to avoid overloading and to prevent slides or cave-ins. Material unsuitable for backfilling, or excess material, shall be hauled from the job site and disposed of by the Contractor.

The Contractor shall, prior to commencement of the work, submit a letter to the Contracting Agency stating the location of each disposal site for all excess or unsuitable material and certify that he has obtained the property owner's permission for the disposal of all such materials.

Where the plans and/or special provisions provide for segregation of topsoil from underlying material for purposes of backfill, the material shall not be mixed.

601.2.9 Shoring and Sheeting: The Contractor shall do such trench bracing, sheathing, or shoring necessary to perform and protect the excavation as required for safety and conformance to governing laws. The bracing, sheathing, or shoring shall not be removed in one operation but shall be done in successive stages as determined by the Engineer to prevent overloading of the pipe during backfilling operations. The cost of the bracing, sheathing, or shoring, and the removal of same, shall be included in the unit price for the pipe.

All shoring and sheeting deemed necessary to protect the excavation and to safeguard employees, shall be installed. See Section 107.

601.2.10 Open Trench: Except where otherwise noted in the special provisions, or approved in writing by the Engineer, the maximum length of open trench, where the construction is in any stage of completion (excavation, pipe laying or backfilling), shall not exceed 1320 feet in the aggregate at any one location.

Any excavated area shall be considered open trench until all ABC for pavement replacement has been placed and compacted. With the approval of the Engineer, pipe laying may be carried on at more than one separate location, the restrictions on open trench applying to each location. Trenches across streets shall be completely backfilled as soon as possible after pipe laying.

Substantial steel plates with adequate trench bracing shall be used to bridge across trenches at street crossings where trench backfill and temporary patches have not been completed during regular work hours. Steel plates shall be

installed in accordance with Detail 211. Safe and convenient passage for pedestrians shall be provided. The Engineer may designate a passage to be provided at any point he deems necessary. Access to hospitals, fire stations and fire hydrants must be maintained at all times.

601.3 PROTECTION OF EXISTING UTILITIES:

601.3.1 Utilities: Unless otherwise shown on the plans or stated in the specifications, all utilities, either underground or overhead, shall be maintained in continuous service throughout the entire contract period. The Contractor shall be responsible and liable for any damages to or interruption of service caused by the construction.

If the Contractor desires to simplify his operation by temporarily or permanently relocating or shutting down any utility or appurtenance, he shall make the necessary arrangements and agreements with the owner and shall be completely responsible for all costs concerned with the relocation or shutdown and reconstruction. All property shall be reconstructed in its original or new location as soon as possible and to a condition at least as good as its previous condition. This cycle of relocation or shutdown and reconstruction shall be subject to inspection and approval by both the Engineer and the owner of the utility.

The Contractor shall be entirely responsible for safeguarding and maintaining all conflicting utilities that are shown on the plans (Sections 107 and 105 apply). This includes overhead wires and cables and their supporting poles whether they are inside or outside of the open trench. If, in the course of work, a conflicting utility line that was not shown on the plans is discovered, the Contracting Agency will either negotiate with the owner for relocation, relocate the utility, change the alignment and grade of the trench or as a last resort, declare the conflict as "extra work" to be accomplished by the Contractor in accordance with Section 104.

601.3.2 Irrigation Ditches, Pipes and Structures: The Contractor shall contact the owners of all irrigation facilities, and make arrangements for necessary construction clearances and/or dry-up periods.

All irrigation ditches, dikes, headgates, pipe, valves, checks, etc., damaged or removed by the Contractor, shall be restored to their original condition or better, by the Contractor at no additional cost to the Contracting Agency.

601.3.3 Building, Foundations and Structures: Where trenches are located adjacent to building, foundations, and structures, the Contractor shall take all necessary precaution against damage to them. The Contractor shall be liable for any damage caused by the construction.

Except where authorized in the special provisions or in writing by the Engineer, water settling of backfill material in trenches adjacent to structures will not be permitted.

601.3.4 Permanent Pipe Supports: Permanent pipe supports for the various types and sizes of sewer, water and utility lines shall conform to the Standard Details or the details shown on the plans. Such pipe supports shall be erected at the locations shown on the plans and/or at any other locations as necessary as determined by the Engineer.

601.4 FOUNDATION, BEDDING, HAUNCHING, BACKFILLING AND COMPACTION:

601.4.1 Foundation: The native or prepared material (when required) upon which the bedding material is placed.

601.4.2 Bedding: The material upon which the conduit or structure is to be placed shall be accurately finished to the grade or dimensions shown on the plans or as directed by the Engineer. The bottom portion of the trench shall be brought to grade so that the conduit or structure will be continuously in contact with the material on which it is being placed. If rocky or unsuitable soil is encountered, Subsection 601.2.5 applies.

Unless otherwise specified in the project plans or project specifications, the minimum material type shall be A.B.C. per Section 702.

601.4.3 Haunching: The material placed between the bedding and springline shall be constructed using the specified material and compacted for the full length of the pipe so as to distribute the load-bearing reaction uniformly to the bedding. If placed in lifts, the thickness shall not exceed 2 feet and shall be deposited and

compacted to the specified density uniformly on each side of the pipe to prevent lateral displacement of the pipe. Compaction requirements shall be per Section 601.4.6. The moisture content shall be such that the specified compaction can be obtained.

Unless otherwise specified in the project plans or project specifications, the minimum material type shall be A.B.C. per Section 702. With agency approval, native or CLSM may be used as an option.

601.4.4 Initial Backfill: The material placed between the springline to 12 inches above top of pipe (minimum) shall be placed in lifts the height of which shall not exceed 2 feet or that which can be effectively compacted depending on the type of material, type of equipment and methods used. Compaction requirements shall be per Section 601.4.6. The moisture content shall be such that the specified compaction can be obtained.

Unless otherwise specified in the project plans or project specifications, the minimum material type shall be A.B.C. per Section 702. With agency approval, native or CLSM may be used as an option.

Backfill, around utilities that are exposed during trench excavation, shall be placed in accordance with the bedding methods.

601.4.5 Final Backfill: The material placed above the initial backfill shall be placed in lifts the height of which shall not exceed that which can be effectively compacted depending on the type of material, type of equipment and methods used, and under no circumstances shall exceed 4 feet. Compaction requirements shall be per Section 601.4.6. All backfill shall be constructed per Detail 200-1 with the type of replacement noted on the plans or in the special provisions. Unless otherwise noted, backfill under single curb, curb and gutter, sidewalk, driveways, valley gutters, etc. shall be the same as the adjacent street pavement.

601.4.6 Compaction Densities: Unless otherwise provided in the plans and/or special provisions, the trench backfill shall be thoroughly compacted to not less than the densities in Table 601-2 when tested and determined by AASHTO T-99 and T-191 or ASTM D6938. When AASHTO T-99, method A or B, and T-191 are used for density determination, ARIZ-227c will be used for rock correction. All compaction discussed within this section shall be performed within 2 percentage points of optimum moisture content unless otherwise noted in the project plans or project specifications.

The density required will depend on the Type shown on the plans and/or called for in the special provisions. Density required for each type shall comply with Table 601-2.

TABLE 601-2

MINIMUM TRENCH COMPACTION DENSITIES

Backfill Type	Location	From Surface To 2 feet Below Surface	From 2 feet Below Surface To 1 foot Above Top of Pipe	From 1 foot Above Top of Pipe to Bottom of Pipe
I	Under any existing or proposed pavement, curb, gutter, attached sidewalk, roadway shoulders, and other areas within right-of-way subject to vehicular traffic, or when any part of the trench excavation is within 2-feet of the existing pavement, curb, or gutter.	100% for granular 95% for non-granular	95%	95%
II	On any utility easement or right-of-way outside limits of Type I backfill.	95%	95%	95%
III	Around any structures (manholes, etc.) or exposed utilities.	95% for A.B.C., 100% for native or CLSM		

Note: The type required will generally be shown on the plans and the plans will govern. Where no type is shown on the plans, the type shall comply with Table 601-2.

A consideration in determining the backfill Types as shown on the plans, is based on the trench widths as shown in the Contract Documents. If these trench widths increase beyond those widths referred to above and fall within the 2-foot limit of paved surfaces and other improvements due to construction exigencies, the backfill designation for that portion within the 2-foot limit of such improvements shall be Type I even though Type II backfill is shown on the plans.

601.4.7 Compaction Methods: Unless otherwise specified in the plans and/or special provisions, the backfill material shall be uniformly compacted using mechanical work methods. When allowed by the agency, consolidation by jetting is also an acceptable compaction method; however, testing requirements shall be increased (100% increase per lift). Care will be taken to prevent damage to or movement of the conduit by the compaction method or equipment used.

Water consolidation by jetting shall be accomplished with a 1 ½ inches pipe of sufficient length to reach the bottom of the lift being settled with adequate hose attached and a water pressure of not less than 30 psi. All jetting shall be accomplished transversely across the trench at intervals of not more than 6 feet with the jetting locations on one side of the trench offset to the jetting locations on the other side of the trench. The entire lift shall be leveled and completely saturated working from the top to the bottom.

When jetting is used within the haunching and initial backfill zones, the Contractor shall be entirely responsible for establishing each lift depth so as to avoid floating the conduit being placed and shall make any repair or replacement at no cost to the Contracting Agency. However, for conduit larger than 24 inches I.D. the first lift shall not exceed the springline of the conduit and subsequent lifts shall not exceed 3 feet.

Flooding is not acceptable as a water consolidation method unless authorized in the specification or by a written change order. It will consist of the inundation of the entire lift with water and then puddle with poles or bars to insure saturation of the entire lift.

Where jetting or flooding is utilized and the surrounding material is such that it does not permit proper drainage, the Contractor shall provide, at his expense a sump and a pump at the downstream end to remove the accumulated water.

The use of water consolidation does not relieve the Contractor from the responsibility to make his own determination that such methods will not result in damage to existing improvements. The Contractor shall be responsible for any damage incurred.

If water consolidation is not successful, mechanical compaction methods shall be used to meet the compaction requirements. Backfill material may need to be removed and replaced.

Where Type I backfill is required, water consolidation shall only be permitted when the material in which the trench is located and the backfill are both granular material. No exception shall be made for construction within new developments.

601.4.8 Specifications for Granular Material: For purposes of this specification, granular material shall mean material for which the sum of the plasticity index and the percent of the material passing a No. 200 sieve shall not exceed 23. The plasticity index shall be tested in accordance with AASHTO T-146 Method A (Wet Preparation), T-89 and T-90.

601.4.9 Rights-Of-Way Belonging to Others: Backfill and compaction for irrigation lines of the Salt River Valley Water Users' Association and Roosevelt Irrigation Districts and for trenches in State of Arizona and Maricopa County right-of-way outside the limits of the Contracting Agency shall be accomplished in accordance with their permit and/or specifications.

601.4.10 Test Holes: Boring logs shown on the plans do not constitute a part of the contract and are included for the Contractor's convenience only. It is not intended to imply that the character of the material is the same as that shown on the logs at any point other than that where the boring was made. The Contractor shall satisfy himself regarding the character and amount of rock, gravel, sand, silt, clay and water to be encountered in the work to be

performed.

601.4.10 Bedding and Backfilling for Electronic, Telephonic, Telegraphic, Electrical, Oil and Gas Lines: The bedding and backfill for these underground facilities shall be native material or sand which conforms to the grading requirement of ASTM C33 for fine aggregate. When backfill material consists of aggregate base course, crushed stone, or other material containing stones, only sand will be used for foundation, and bedding. The bedding depth shall be six inches and backfill depth shall be one foot above the top of the facility. Compaction will be in accordance with Section 601.

601.5 CONTRACTOR CERTIFICATION OF INSTALLATION PROCEDURES:

When requested in the Special Provisions or by the Engineer prior to installation, the Contractor shall furnish to the Contracting Agency an affidavit (certification) from the pipe manufacturer (or his designee) stating that the Contractor is familiar with the manufacturer's suggested installation methods and procedures and the installation complies with those procedures and is consistent with MAG requirements.

Also, when required in the Special/Technical Provisions or requested by the Engineer, the pipe manufacturer or his designee will review the Contractor's methods and procedures for pipe installation in the field. The Contractor will make any adjustments in the installation as recommended by the manufacturer or his representative. If necessary, the Contractor may be required to reinstall or provide corrections to pipe installed prior to the field review at no cost to the Agency. Once the manufacturer or his representative has reviewed the Contractor's installation methods and the Contractor has adjusted his installation methods as recommended by the same, the manufacturer or his representative shall furnish to the Contracting Agency an affidavit (certification) that the Contractor's installation methods and procedures, at the time of the review, complied with the manufacturer's installation practices. The affidavit must provide the name of the manufacturer's representative witnessing the pipe installation.

601.6 PAVEMENT REPLACEMENT AND SURFACE RESTORATION:

601.6.1 Grading: The Contractor shall do such grading in the area adjacent to backfilled trenches and structures as may be necessary to leave the area in a neat and satisfactory condition approved by the Engineer.

601.6.2 Restoring Surface: All streets, alleys, driveways, sidewalks, curbs, or other surfaces, in which the surface is broken into or damaged by the installation of the new work, shall be resurfaced in kind or as specified to the satisfaction of the Engineer in accordance with Section 336.

601.6.3 Cleanup: The job site shall be left in a neat and acceptable condition. Excess soil, concrete, etc., shall be removed from the premises.

601.6.4 Temporary Pavement: The Contractor shall install temporary asphalt pavement or the first course of permanent pavement replacement in accordance with Section 336 immediately following backfilling and compaction of trenches that have been cut through existing pavement. Except as otherwise provided in Section 336, this preliminary pavement shall be maintained in a safe and reasonably smooth condition until required backfill compaction is obtained and final pavement replacement is ordered by the Engineer. Temporary paving removed shall be hauled from the job site and disposed of by the Contractor at no additional cost to the Contracting Agency.

601.7 PAYMENT:

No pay item will be included in the proposal, nor direct payment made for trench excavation, backfilling, compaction, or placement of temporary pavement. The cost of these features of the work shall be included in the unit price per linear foot for furnishing and laying pipe.

- End of Section -

SECTION 603

FLEXIBLE PIPE TRENCH EXCAVATION, BACKFILLING AND COMPACTION

603.1 DESCRIPTION:

The work covered by this specification consists of furnishing all plant, labor, equipment, appliances and materials, and performing all operations in connection with the trench excavation, backfilling and compaction for a single flexible pipe installation in accordance with the plans and special provisions. Pipe materials that are considered to be flexible include thermoplastic pipes and corrugated metal pipe and arches. See Section 601 for rigid pipe trench excavation, backfilling and compaction.

For the purpose of this specification, flexible pipe shall include 8 inches through 120 inches nominal diameter.

The Trench Cross-Section Detail shown on Detail 200-2 illustrates the terminology used in this specification.

See Section 615 for sewer line construction procedures.

See Section 618 for storm drain construction procedures.

HDPE pipe and fittings shall conform to Section 738. SRPE pipe and fittings shall conform to Section 739. Polypropylene pipe and fittings shall conform to Section 740. PVC pipe and fittings shall conform to Section 745. Corrugated metal pipe and arches shall conform to Section 760.

Excavation for appurtenance structures, such as manholes, inlets, transition structures, junction structures, vaults, valve boxes, catch basins, etc., shall be deemed to be in the category of trench excavation.

See Section 602 for trenchless installations.

603.2 EXCAVATION:

601.2.1 General: The Contractor shall perform all excavation of every description and of whatever substances encountered, to the depths indicated on the plans, and including excavation ordered by the Engineer of compacted backfill for the purpose of making density tests on any portion of the backfill.

All excavation shall be open cut unless otherwise shown on the plans or approved by the Engineer.

603.2.2 Trench Widths: Trenches for flexible pipe~~ other than profile HDPE pipe, meeting ASTM F894,~~ shall conform to the dimensions in Table 603-1, unless otherwise specified in the special provisions, indicated on the plans, and/or approved by the Engineer. ~~Trench widths for profile HDPE pipe, meeting ASTM F894, will be designed by the Engineer and included on the plans or in the special provisions.~~

Table 603-1

FLEXIBLE PIPE – TRENCH WIDTHS

Size of Pipe (Nom. Dia.)	Maximum Width At Top Of Pipe Greater Than O.D. Of Barrel	Minimum Width At Springline Each Side of Pipe (1)
Less than 18 inches	20 inches	8 inches
18 inches to 24 inches inclusive	23 inches	9.5 inches
27 inches to 36 inches inclusive	28 inches	12 inches
42 inches to 60 inches inclusive	34 inches	14 inches
66 inches to 78 inches inclusive	44 inches	16 inches
84 inches to 96 inches inclusive	48 inches	18 inches
102 inches to 120 inches inclusive	54 inches	21 inches

(1) When the specified compaction cannot be obtained in the haunch area and/or initial backfill zone, the Contractor shall make necessary changes in his methods and/or equipment to obtain the desired results. In some

instances, the Minimum Width at springline shall be adjusted wider to assist the Contractor in obtaining the compaction. The Engineer must be satisfied with the Contractor's compaction effort, concur with the change and approve the revised distance. There shall be no additional cost to the Agency for the extra trench width.

For multiple pipe installations in a single trench, the Engineer shall provide details on the plans or in the Special/Technical Provisions as to the layout, pipe configuration, distances between pipes and trench walls, the type of backfill and bedding materials, etc.

The width of the trench shall not be greater than the maximum indicated in Table 603-1, at and below the level of the top of the pipe. The width of the trench above that level may be made as wide as necessary for sheeting and bracing, and for proper installation of the work.

If the maximum trench width as specified in Table 603-1 is exceeded at the top of the pipe the Contractor shall provide, at no additional cost to the Contracting Agency, the necessary additional load bearing capacity by means of ~~bedding~~initial backfill, having a higher bedding factor than that specified, higher strength pipe, a concrete cradle, cap or encasement, or by other means approved in writing by the Engineer. Where safety or undermining situations occur, a CLSM backfill may be used as needed.

603.2.3 Trench Grade: Alignment and elevation stakes shall be furnished the Contractor at set intervals and agreed upon offsets. On water main projects, elevation stakes will be furnished only when deemed necessary by the Engineer. In all cases where elevation stakes are furnished, the Engineer will also furnish the Contractor with cut sheets.

For all pipe 12 inches or greater in diameter, the Contractor shall excavate for and provide an initial granular bedding at least 4 inches thick or 1/12 the O.D. of the pipe whichever is greater. This bedding material shall be placed at a uniform density with specified ~~minimum~~ compaction and fine graded as specified below.

Bell or coupling holes shall be dug after the trench bottom has been graded. Such holes shall be of sufficient width to provide ample room for caulking, banding, or bolting. Holes shall be excavated only as necessary to permit accurate work in the making of the joints and to insure that the pipe will rest upon the prepared bottom of the trench, and not be supported by any portion of the joint.

Depressions for joints, other than bell-and-spigot, shall be made in accordance with the recommendations of the joint manufacturer for the particular joint used.

603.2.4 Fine Grading: Unless otherwise specified in the plans and/or special provisions, the bottom of the trench shall be accurately graded to provide uniform bearing and support for each section of the pipe at every point along its entire length, except for portions of the pipe where it is necessary to excavate for bells and for proper sealing of the pipe joints.

603.2.5 Overexcavation: Except at locations where excavation of rock from the bottom of the trench is required, care shall be taken not to excavate below the depth indicated.

Unauthorized excavation below the specified grade line shall be refilled at the Contractor's expense with ABC material compacted to a uniform density of not less than 95 percent of the maximum density as determined by AASHTO T-99 and T-191 or ASTM D6938. When AASHTO T-99, method A or B, and T-191 are used for density determination, ARIZ 227c will be used for rock correction.

Whenever bedrock is encountered in the trench bottom, it shall be overexcavated to a minimum depth of six inches below the O.D. of the pipe. This overexcavation shall be filled with granular material placed with the minimum possible compaction.

Whenever unsuitable soil incapable of supporting the pipe is encountered, the Contractor will notify the Engineer and a field determination will be made as to the depth of overexcavation and the granular fill required.

603.2.6 Excavation for Manholes, Valves, Inlets, Catch Basins and Other Accessories: The Contractor may excavate to place the concrete structure directly against the excavated surface, provided that the faces of the excavation are firm and unyielding and are at all points outside the structure lines shown on the plans. If the native material is such that it will not stand without sloughing or if precast structures are used, the Contractor shall overexcavate to place the structure and this overexcavation shall be backfilled with the same material required for the adjoining pipe line trench and compacted per Table 603-2.

Any unnecessary excavation below the elevation indicated for the foundation of any structure shall be replaced with the same class of concrete specified for the structure or with 1 ½ sack controlled low strength material as specified in Section 728. When the replacement material is structural concrete, the material shall be placed at the same time as the structure. However, when using 1 ½ sack controlled low strength material, placement of the material shall be per Section 604 which will require a time lag between the material and the structural concrete. The placement of the additional material shall be at no cost to the Agency.

603.2.7 Pavement and Concrete Cutting and Removal: Where trenches lie within the Portland cement concrete section of streets, alleys, driveways, or sidewalks, etc., such concrete shall be sawcut to neat, vertical, true lines in such a manner that the adjoining surface will not be damaged. The minimum depth of cut shall be 1 ½ inches or 1/4 of the thickness, whichever is greater.

Asphalt pavement shall be clean-cut, with approved equipment and by approved methods in accordance with the requirements of Section 336.

No ripping or rooting will be permitted outside limits of cuts. Surfacing materials removed shall be hauled from the job site immediately, and will not be permitted in the backfill.

See Detail 200-1 and 200-2 for further requirements.

603.2.8 Grading and Stockpiling: All grading in the vicinity of trench excavation shall be controlled to prevent surface water from flowing into the trenches. Any water accumulated in the trenches shall be removed by pumping or by other approved methods.

During excavation, material suitable for backfilling shall be piled in an orderly manner, a sufficient distance back from the edges of trenches, to avoid overloading and to prevent slides or cave-ins. Material unsuitable for backfilling, or excess material, shall be hauled from the job site and disposed of by the Contractor.

The Contractor shall, prior to ~~final acceptance~~commencement -of the work, submit a letter to the Contracting Agency stating the location of each disposal site for all excess or unsuitable material and certify that he has obtained the property owner's permission for the disposal of all such materials.

Where the plans and/or special provisions provide for segregation of topsoil from underlying material for purposes of backfill, the material shall not be mixed.

603.2.9 Shoring and Sheeting: The Contractor shall do such trench bracing, sheathing, or shoring necessary to perform and protect the excavation as required for safety and conformance to governing laws. The bracing, sheathing, or shoring shall not be removed in one operation but shall be done in successive stages as determined by the Engineer to prevent overloading of the pipe during backfilling operations. The cost of the bracing, sheathing, or shoring, and the removal of same, shall be included in the unit price for the pipe.

All shoring and sheeting deemed necessary to protect the excavation and to safeguard employees, shall be installed. See Section 107.

603.2.10 Open Trench: Except where otherwise noted in the special provisions, or approved in writing by the Engineer, the maximum length of open trench, where the construction is in any stage of completion (excavation, pipe laying or backfilling), shall not exceed 1320 feet in the aggregate at any one location.

Any excavated area shall be considered open trench until all ABC for pavement replacement has been placed and compacted. With the approval of the Engineer, pipe laying may be carried on at more than one separate location, the restrictions on open trench applying to each location. Trenches across streets shall be completely backfilled as soon as possible after pipe laying.

Substantial steel plates with adequate trench bracing shall be used to bridge across trenches at street crossings where trench backfill and temporary patches have not been completed during regular work hours. Steel plates shall be installed in accordance with Detail 211. Safe and convenient passage for pedestrians shall be provided. The Engineer may designate a passage to be provided at any point he deems necessary. Access to hospitals, fire stations and fire hydrants must be maintained at all times.

603.3 PROTECTION OF EXISTING UTILITIES:

603.3.1 Utilities: Unless otherwise shown on the plans or stated in the specifications, all utilities, either underground or overhead, shall be maintained in continuous service throughout the entire contract period. The Contractor shall be responsible and liable for any damages to or interruption of service caused by the construction.

If the Contractor desires to simplify his operation by temporarily or permanently relocating or shutting down any utility or appurtenance, he shall make the necessary arrangements and agreements with the owner and shall be completely responsible for all costs concerned with the relocation or shutdown and reconstruction. All property shall be reconstructed in its original or new location as soon as possible and to a condition at least as good as its previous condition. This cycle of relocation or shutdown and reconstruction shall be subject to inspection and approval by both the Engineer and the owner of the utility.

The Contractor shall be entirely responsible for safeguarding and maintaining all conflicting utilities that are shown on the plans (Sections 107 and 105 apply). This includes overhead wires and cables and their supporting poles whether they are inside or outside of the open trench. If, in the course of work, a conflicting utility line that was not shown on the plans is discovered, the Contracting Agency will either negotiate with the owner for relocation, relocate the utility, change the alignment and grade of the trench or as a last resort, declare the conflict as "extra work" to be accomplished by the Contractor in accordance with Section 104.

603.3.2 Irrigation Ditches, Pipes and Structures: The Contractor shall contact the owners of all irrigation facilities, and make arrangements for necessary construction clearances and/or dry-up periods.

All irrigation ditches, dikes, headgates, pipe, valves, checks, etc., damaged or removed by the Contractor, shall be restored to their original condition or better, by the Contractor at no additional cost to the Contracting Agency.

603.3.3 Building, Foundations and Structures: Where trenches are located adjacent to building, foundations, and structures, the Contractor shall take all necessary precaution against damage to them. The Contractor shall be liable for any damage caused by the construction.

Except where authorized in the special provisions or in writing by the Engineer, water settling of backfill material in trenches adjacent to structures will not be permitted.

603.3.4 Permanent Pipe Supports: Permanent pipe supports for the various types and sizes of sewer, water and utility lines shall conform to the Standard Details or the details shown on the plans. Such pipe supports shall be erected at the locations shown on the plans and/or at any other locations as necessary as determined by the Engineer.

~~**603.3.5 Electronic, Telephonic, Telegraphic, Electrical, Oil and Gas Lines:** These underground facilities shall be adequately supported by the Contractor. Support for plastic pipes shall be continuous along the bottom of the pipe. Support for metal pipe and electrical conduit may be continuous or nylon webbing may be used for suspension at no greater than ten-foot intervals.~~

~~The Contractor shall avoid damaging the plastic pipe, pipeways or conduits during trench backfilling and during foundation and bedding placement.~~

~~There will be no measurement or payment for this work. The Contractor will include all associated costs in the unit price for the conduit installation.~~

603.4 FOUNDATION, BEDDING, HAUNCHING, BACKFILLING AND COMPACTION:

603.4.1 Foundation: The native or prepared material (when required) upon which the bedding material is placed.

603.4.~~1~~ 2 Bedding: The material upon which the conduit or structure is to be placed shall be accurately finished to the grade or dimensions shown on the plans or as directed by the Engineer. The bottom portion of the trench shall be brought to grade so that the conduit or structure will be continuously in contact with the material on which it is being placed. If rocky or unsuitable soil is encountered, Subsection 603.2.5 applies.

Unless otherwise specified in the project plans or project specifications, the minimum material type shall be A.B.C. per Section 702.

603.4.~~2~~ 3 Haunching: The material placed between the bedding and springline shall be constructed using the specified material and compacted for the full length of the pipe so as to distribute the load-bearing reaction uniformly to the bedding. If placed in lifts, the thickness shall not exceed 1 foot and shall be deposited and compacted to the specified density uniformly on each side of the pipe to prevent lateral displacement of the pipe. Compaction requirements shall be per Section 603.4.6.
The moisture content shall be such that the specified compaction can be obtained. ~~Extreme care will be taken to prevent damage to or movement of the conduit by the compaction equipment.~~

Unless otherwise specified in the project plans or project specifications, the minimum material type shall be A.B.C. per Section 702. With agency approval, native or CLSM may be used as an option.

603.4.~~3~~ 4 Initial Backfill: The material placed between the springline to 12 inches above top of pipe (minimum) shall be placed in lifts the height of which shall not exceed 1 foot or that which can be effectively compacted depending on the type of material, type of equipment and methods used. Extreme care will be taken to prevent damage to or movement of the conduit by the compaction equipment. Compaction requirements shall be per Section 603.4.6.

The moisture content shall be such that the specified compaction can be obtained.
~~backfill shall be placed in lifts the height of which shall not exceed that which can be effectively compacted depending on the type of material, type of equipment and methods used, and under no circumstances shall exceed 4 feet. Extreme care will be taken to prevent damage to or movement of the conduit by the compaction equipment.~~
Unless otherwise specified in the project plans or project specifications, the minimum material type shall be A.B.C. per Section 702. With agency approval, native or CLSM may be used as an option.

Backfill, around utilities that are exposed during trench excavation, shall be placed in accordance with the bedding methods.

603.4.~~4~~ 5 Final Backfill: The material placed above the initial backfill shall be placed in lifts the height of which shall not exceed that which can be effectively compacted depending on the type of material, type of equipment and methods used, and under no circumstances shall exceed 4 feet. Compaction requirements shall be per Section 601.4.6. All backfill shall be constructed per Detail 200-1 with the type of replacement noted on the plans or in the special provisions. Unless otherwise noted, backfill under single curb, curb and gutter, sidewalk, driveways, valley gutters, etc. shall be the same as the adjacent street pavement.

~~Backfill shall be placed in lifts the height of which shall not exceed that which can be effectively compacted depending on the type of material, type of equipment and methods used, and under no circumstances shall exceed 4 feet.~~

603.4.~~5~~ 6 Compaction Densities: Unless otherwise provided in the plans and/or special provisions, the trench backfill shall be thoroughly compacted to not less than the densities in Table 603-2 when tested and determined by AASHTO T-99 and T-191 or ASTM D6938. When AASHTO T-99, method A or B, and T-191 are used for density determination, ARIZ-227c will be used for rock correction. All compaction discussed within this section shall be performed within 2 percentage points of optimum moisture content unless otherwise noted in the project plans or project specifications.

The density required will depend on the Type shown on the plans and/or called for in the special provisions. Density required for each type shall comply with Table 603-2.

TABLE ~~601~~603-2				
MINIMUM TRENCH COMPACTION DENSITIES				
Backfill Type	**Location**	**From Surface To 2 feet Below Surface**	**From 2 feet Below Surface To 1 foot Above Top of Pipe**	**From 1 foot Above Top of Pipe to Bottom of ~~Trench~~Pipe**

I	Under any existing or proposed pavement, curb, gutter, attached sidewalk, roadway shoulders, and other areas within right-of-way subject to vehicular traffic~~or such construction included in the contract~~, or when any part of the trench excavation is within 2-feet of the existing pavement, curb, or gutter~~above~~.	100% for granular 95% for non-granular	~~90~~95%	~~90~~95%
II	On any utility easement ~~street, road~~ or ~~alley~~ right-of-way outside limits of Type I backfill.~~(I).~~	~~85~~95%	~~85~~95%	~~90~~95%
III	Around any structures (manholes, etc.) or exposed utilities.	95% for A.B.C., 100% for native~~in all cases~~ or CLSM		

Note: The type required will generally be shown on the plans and the plans will govern. Where no type is shown on the plans, the type shall comply with Table 603-2.

A consideration in determining the backfill Types as shown on the plans, is based on the trench widths as shown in the Contract Documents. If these trench widths increase beyond those widths referred to above and fall within the 2-foot limit of paved surfaces and other improvements due to construction exigencies, the backfill designation for that portion within the 2-foot limit of such improvements shall be Type I even though Type II backfill is shown on the plans.

603.4.~~6~~ 7 Compaction Methods: Unless otherwise specified in the plans and/or special provisions, the backfill material shall be uniformly compacted using mechanical work methods. When allowed by the agency, consolidation by jetting is also an acceptable compaction method; however, testing requirements shall be increased (100% increase per lift). Care will be taken to prevent damage to or movement of the conduit by the compaction method or equipment used.

Water consolidation by jetting shall be accomplished with a 1 ½ inches pipe of sufficient length to reach the bottom of the lift being settled with adequate hose attached and a water pressure of not less than 30 psi. All jetting shall be accomplished transversely across the trench at intervals of not more than 6 feet with the jetting locations on one side of the trench offset to the jetting locations on the other side of the trench. The entire lift shall be leveled and completely saturated working from the top to the bottom.

When jetting is used within the haunching and initial backfill zones, the Contractor shall be entirely responsible for establishing each lift depth so as to avoid floating the conduit being placed and shall make any repair or replacement at no cost to the Contracting Agency. However, for conduit larger than 24 inches I.D. the first lift shall not exceed the springline of the conduit and subsequent lifts shall not exceed 3 feet.

Flooding is not acceptable as a water consolidation method unless authorized in the specification or by a written change order. It will consist of the inundation of the entire lift with water and then puddle with poles or bars to insure saturation of the entire lift.

Where jetting or flooding is utilized and the surrounding material is such that it does not permit proper drainage, the Contractor shall provide, at his expense a sump and a pump at the downstream end to remove the accumulated water.

The use of water consolidation does not relieve the Contractor from the responsibility to make his own determination that such methods will not result in damage to existing improvements. The Contractor shall be responsible for any damage incurred.

If water consolidation is not successful, mechanical compaction methods shall be used to meet the compaction requirements. Backfill material may need to be removed and replaced. No exception shall be made for construction within new developments.

Where Type I backfill is required, water consolidation shall only be permitted when the material in which the trench is located and the backfill are both granular material.

603.4.~~7~~ 8 Specifications for Granular Material: For purposes of this specification, granular material shall mean material for which the sum of the plasticity index and the percent of the material passing a No. 200 sieve shall not exceed 23. The plasticity index shall be tested in accordance with AASHTO T-146 Method A (Wet Preparation), T-89 and T-90.
~~Coarse aggregate shall consist of crushed rock as defined in Section 701.2 with 100 percent of the specified size of aggregate having one fractured face tested in accordance with ARIZ 212, and having the gradation complying with ASTM D448, Table 1, Size Numbers 6, 67, 68, 7, 78, or 8 as recommended by the Engineer. The gradation size number to be furnished shall be shown on the plans or in the project specifications.~~

603.4.~~8~~ 9 Rights-Of-Way Belonging to Others: Backfill and compaction for irrigation lines of the Salt River Valley Water Users' Association and Roosevelt Irrigation Districts and for trenches in State of Arizona and Maricopa County right-of-way outside the limits of the Contracting Agency shall be accomplished in accordance with their permit and/or specifications.

603.4.~~9~~ 10 Test Holes: Boring logs shown on the plans do not constitute a part of the contract and are included for the Contractor's convenience only. It is not intended to imply that the character of the material is the same as that shown on the logs at any point other than that where the boring was made. The Contractor shall satisfy himself regarding the character and amount of rock, gravel, sand, silt, clay and water to be encountered in the work to be performed.

603.4.~~10~~ 11 Bedding and Backfilling for Electronic, Telephonic, Telegraphic, Electrical, Oil and Gas Lines: The bedding and backfill for these underground facilities shall be native material or sand which conforms to the grading requirement of ASTM C33 for fine aggregate. When backfill material consists of aggregate base course, crushed stone, or other material containing stones, only sand will be used for foundation, and bedding. The bedding depth shall be six inches and backfill depth shall be one foot above the top of the facility. Compaction will be in accordance with Section 603.

603.5 CONTRACTOR CERTIFICATION OF INSTALLATION PROCEDURES:

When requested in the Special Provisions or by the Engineer prior to installation, the Contractor shall furnish to the Contracting Agency an affidavit (certification) from the pipe manufacturer (or his designee) stating that the Contractor is familiar with the manufacturer's suggested installation methods and procedures and the installation complies with those procedures and is consistent with MAG requirements.

Also, when required in the Special/Technical Provisions or requested by the Engineer, the pipe manufacturer or his designee will review the Contractor's methods and procedures for pipe installation in the field. The Contractor will make any adjustments in the installation as recommended by the manufacturer or his representative. If necessary, the Contractor may be required to reinstall or provide corrections to pipe installed prior to the field review at no cost to the Agency. Once the manufacturer or his representative has reviewed the Contractor's installation methods and the Contractor has adjusted his installation methods as recommended by the same, the manufacturer or his representative shall furnish to the Contracting Agency an affidavit (certification) that the Contractor's installation methods and procedures, at the time of the review, complied with the manufacturer's installation practices. The affidavit must provide the name of the manufacturer's representative witnessing the pipe installation.

603.6 PAVEMENT REPLACEMENT AND SURFACE RESTORATION:

603.6.1 Grading: The Contractor shall do such grading in the area adjacent to backfilled trenches and structures as may be necessary to leave the area in a neat and satisfactory condition approved by the Engineer.

603.6.2 Restoring Surface: All streets, alleys, driveways, sidewalks, curbs, or other surfaces, in which the surface is broken into or damaged by the installation of the new work, shall be resurfaced in kind or as specified to the satisfaction of the Engineer in accordance with Section 336.

603.6.3 Cleanup: The job site shall be left in a neat and acceptable condition. Excess soil, concrete, etc., shall be removed from the premises.

603.6.4 Temporary Pavement: The Contractor shall install temporary asphalt pavement or the first course of permanent pavement replacement in accordance with Section 336 immediately following backfilling and compaction of trenches that have been cut through existing pavement. Except as otherwise provided in Section 336, this preliminary pavement shall be maintained in a safe and reasonably smooth condition until required backfill compaction is obtained and final pavement replacement is ordered by the Engineer. Temporary paving removed shall be hauled from the job site and disposed of by the Contractor at no additional cost to the Contracting Agency.

603.7 PAYMENT:

No pay item will be included in the proposal, nor direct payment made for trench excavation, backfilling, compaction, or placement of temporary pavement. The cost of these features of the work shall be included in the unit price per linear foot for furnishing and laying pipe.

- End of Section -

SECTION 603

FLEXIBLE PIPE TRENCH EXCAVATION, BACKFILLING AND COMPACTION

603.1 DESCRIPTION:

The work covered by this specification consists of furnishing all plant, labor, equipment, appliances and materials, and performing all operations in connection with the trench excavation, backfilling and compaction for a single flexible pipe installation in accordance with the plans and special provisions. Pipe materials that are considered to be flexible include thermoplastic pipes and corrugated metal pipe and arches. See Section 601 for rigid pipe trench excavation, backfilling and compaction.

For the purpose of this specification, flexible pipe shall include 8 inches through 120 inches nominal diameter.

The Trench Cross-Section Detail shown on Detail 200-2 illustrates the terminology used in this specification.

See Section 615 for sewer line construction procedures.

See Section 618 for storm drain construction procedures.

HDPE pipe and fittings shall conform to Section 738. SRPE pipe and fittings shall conform to Section 739. Polypropylene pipe and fittings shall conform to Section 740. PVC pipe and fittings shall conform to Section 745. Corrugated metal pipe and arches shall conform to Section 760.

Excavation for appurtenance structures, such as manholes, inlets, transition structures, junction structures, vaults, valve boxes, catch basins, etc., shall be deemed to be in the category of trench excavation.

See Section 602 for trenchless installations.

603.2 EXCAVATION:

601.2.1 General: The Contractor shall perform all excavation of every description and of whatever substances encountered, to the depths indicated on the plans, and including excavation ordered by the Engineer of compacted backfill for the purpose of making density tests on any portion of the backfill.

All excavation shall be open cut unless otherwise shown on the plans or approved by the Engineer.

603.2.2 Trench Widths: Trenches for flexible pipe shall conform to the dimensions in Table 603-1, unless otherwise specified in the special provisions, indicated on the plans, and/or approved by the Engineer.

Table 603-1

FLEXIBLE PIPE – TRENCH WIDTHS

Size of Pipe (Nom. Dia.)	Maximum Width At Top Of Pipe Greater Than O.D. Of Barrel	Minimum Width At Springline Each Side of Pipe (1)
Less than 18 inches	20 inches	8 inches
18 inches to 24 inches inclusive	23 inches	9.5 inches
27 inches to 36 inches inclusive	28 inches	12 inches
42 inches to 60 inches inclusive	34 inches	14 inches
66 inches to 78 inches inclusive	44 inches	16 inches
84 inches to 96 inches inclusive	48 inches	18 inches
102 inches to 120 inches inclusive	54 inches	21 inches

(1) When the specified compaction cannot be obtained in the haunch area and/or initial backfill zone, the Contractor shall make necessary changes in his methods and/or equipment to obtain the desired results. In some instances, the Minimum Width at springline shall be adjusted wider to assist the Contractor in

obtaining the compaction. The Engineer must be satisfied with the Contractor's compaction effort, concur with the change and approve the revised distance. There shall be no additional cost to the Agency for the extra trench width.

For multiple pipe installations in a single trench, the Engineer shall provide details on the plans or in the Special/Technical Provisions as to the layout, pipe configuration, distances between pipes and trench walls, the type of backfill and bedding materials, etc.

The width of the trench shall not be greater than the maximum indicated in Table 603-1, at and below the level of the top of the pipe. The width of the trench above that level may be made as wide as necessary for sheeting and bracing, and for proper installation of the work.

If the maximum trench width as specified in Table 603-1 is exceeded at the top of the pipe the Contractor shall provide, at no additional cost to the Contracting Agency, the necessary additional load bearing capacity by means of initial backfill, having a higher bedding factor than that specified, higher strength pipe, a concrete cradle, cap or encasement, or by other means approved in writing by the Engineer. Where safety or undermining situations occur, a CLSM backfill may be used as needed.

603.2.3 Trench Grade: Alignment and elevation stakes shall be furnished the Contractor at set intervals and agreed upon offsets. On water main projects, elevation stakes will be furnished only when deemed necessary by the Engineer. In all cases where elevation stakes are furnished, the Engineer will also furnish the Contractor with cut sheets.

For all pipe 12 inches or greater in diameter, the Contractor shall excavate for and provide an initial granular bedding at least 4 inches thick or 1/12 the O.D. of the pipe whichever is greater. This bedding material shall be placed at a uniform density with specified compaction and fine graded as specified below.

Bell or coupling holes shall be dug after the trench bottom has been graded. Such holes shall be of sufficient width to provide ample room for caulking, banding, or bolting. Holes shall be excavated only as necessary to permit accurate work in the making of the joints and to insure that the pipe will rest upon the prepared bottom of the trench, and not be supported by any portion of the joint.

Depressions for joints, other than bell-and-spigot, shall be made in accordance with the recommendations of the joint manufacturer for the particular joint used.

603.2.4 Fine Grading: Unless otherwise specified in the plans and/or special provisions, the bottom of the trench shall be accurately graded to provide uniform bearing and support for each section of the pipe at every point along its entire length, except for portions of the pipe where it is necessary to excavate for bells and for proper sealing of the pipe joints.

603.2.5 Overexcavation: Except at locations where excavation of rock from the bottom of the trench is required, care shall be taken not to excavate below the depth indicated.

Unauthorized excavation below the specified grade line shall be refilled at the Contractor's expense with ABC material compacted to a uniform density of not less than 95 percent of the maximum density as determined by AASHTO T-99 and T-191 or ASTM D6938. When AASHTO T-99, method A or B, and T-191 are used for density determination, ARIZ 227c will be used for rock correction.

Whenever bedrock is encountered in the trench bottom, it shall be overexcavated to a minimum depth of six inches below the O.D. of the pipe. This overexcavation shall be filled with granular material placed with the minimum possible compaction.

Whenever unsuitable soil incapable of supporting the pipe is encountered, the Contractor will notify the Engineer and a field determination will be made as to the depth of overexcavation and the granular fill required.

603.2.6 Excavation for Manholes, Valves, Inlets, Catch Basins and Other Accessories: The Contractor may excavate to place the concrete structure directly against the excavated surface, provided that the faces of the excavation are firm and unyielding and are at all points outside the structure lines shown on the plans. If the native material is such that it will not stand without sloughing or if precast structures are used, the Contractor shall overexcavate to place the structure and this overexcavation shall be backfilled with the same material required for the adjoining pipe line trench and compacted per Table 603-2.

Any unnecessary excavation below the elevation indicated for the foundation of any structure shall be replaced with the same class of concrete specified for the structure or with 1 ½ sack controlled low strength material as specified in Section 728. When the replacement material is structural concrete, the material shall be placed at the same time as the structure. However, when using 1 ½ sack controlled low strength material, placement of the material shall be per Section 604 which will require a time lag between the material and the structural concrete. The placement of the additional material shall be at no cost to the Agency.

603.2.7 Pavement and Concrete Cutting and Removal: Where trenches lie within the Portland cement concrete section of streets, alleys, driveways, or sidewalks, etc., such concrete shall be sawcut to neat, vertical, true lines in such a manner that the adjoining surface will not be damaged. The minimum depth of cut shall be 1 ½ inches or 1/4 of the thickness, whichever is greater.

Asphalt pavement shall be clean-cut, with approved equipment and by approved methods in accordance with the requirements of Section 336.

No ripping or rooting will be permitted outside limits of cuts. Surfacing materials removed shall be hauled from the job site immediately, and will not be permitted in the backfill.

See Detail 200-1 and 200-2 for further requirements.

603.2.8 Grading and Stockpiling: All grading in the vicinity of trench excavation shall be controlled to prevent surface water from flowing into the trenches. Any water accumulated in the trenches shall be removed by pumping or by other approved methods.

During excavation, material suitable for backfilling shall be piled in an orderly manner, a sufficient distance back from the edges of trenches, to avoid overloading and to prevent slides or cave-ins. Material unsuitable for backfilling, or excess material, shall be hauled from the job site and disposed of by the Contractor.

The Contractor shall, prior to commencement of the work, submit a letter to the Contracting Agency stating the location of each disposal site for all excess or unsuitable material and certify that he has obtained the property owner's permission for the disposal of all such materials.

Where the plans and/or special provisions provide for segregation of topsoil from underlying material for purposes of backfill, the material shall not be mixed.

603.2.9 Shoring and Sheeting: The Contractor shall do such trench bracing, sheathing, or shoring necessary to perform and protect the excavation as required for safety and conformance to governing laws. The bracing, sheathing, or shoring shall not be removed in one operation but shall be done in successive stages as determined by the Engineer to prevent overloading of the pipe during backfilling operations. The cost of the bracing, sheathing, or shoring, and the removal of same, shall be included in the unit price for the pipe.

All shoring and sheeting deemed necessary to protect the excavation and to safeguard employees, shall be installed. See Section 107.

603.2.10 Open Trench: Except where otherwise noted in the special provisions, or approved in writing by the Engineer, the maximum length of open trench, where the construction is in any stage of completion (excavation, pipe laying or backfilling), shall not exceed 1320 feet in the aggregate at any one location.

Any excavated area shall be considered open trench until all ABC for pavement replacement has been placed and

compacted. With the approval of the Engineer, pipe laying may be carried on at more than one separate location, the restrictions on open trench applying to each location. Trenches across streets shall be completely backfilled as soon as possible after pipe laying.

Substantial steel plates with adequate trench bracing shall be used to bridge across trenches at street crossings where trench backfill and temporary patches have not been completed during regular work hours. Steel plates shall be installed in accordance with Detail 211. Safe and convenient passage for pedestrians shall be provided. The Engineer may designate a passage to be provided at any point he deems necessary. Access to hospitals, fire stations and fire hydrants must be maintained at all times.

603.3 PROTECTION OF EXISTING UTILITIES:

603.3.1 Utilities: Unless otherwise shown on the plans or stated in the specifications, all utilities, either underground or overhead, shall be maintained in continuous service throughout the entire contract period. The Contractor shall be responsible and liable for any damages to or interruption of service caused by the construction.

If the Contractor desires to simplify his operation by temporarily or permanently relocating or shutting down any utility or appurtenance, he shall make the necessary arrangements and agreements with the owner and shall be completely responsible for all costs concerned with the relocation or shutdown and reconstruction. All property shall be reconstructed in its original or new location as soon as possible and to a condition at least as good as its previous condition. This cycle of relocation or shutdown and reconstruction shall be subject to inspection and approval by both the Engineer and the owner of the utility.

The Contractor shall be entirely responsible for safeguarding and maintaining all conflicting utilities that are shown on the plans (Sections 107 and 105 apply). This includes overhead wires and cables and their supporting poles whether they are inside or outside of the open trench. If, in the course of work, a conflicting utility line that was not shown on the plans is discovered, the Contracting Agency will either negotiate with the owner for relocation, relocate the utility, change the alignment and grade of the trench or as a last resort, declare the conflict as “extra work” to be accomplished by the Contractor in accordance with Section 104.

603.3.2 Irrigation Ditches, Pipes and Structures: The Contractor shall contact the owners of all irrigation facilities, and make arrangements for necessary construction clearances and/or dry-up periods.

All irrigation ditches, dikes, headgates, pipe, valves, checks, etc., damaged or removed by the Contractor, shall be restored to their original condition or better, by the Contractor at no additional cost to the Contracting Agency.

603.3.3 Building, Foundations and Structures: Where trenches are located adjacent to building, foundations, and structures, the Contractor shall take all necessary precaution against damage to them. The Contractor shall be liable for any damage caused by the construction.

Except where authorized in the special provisions or in writing by the Engineer, water settling of backfill material in trenches adjacent to structures will not be permitted.

603.3.4 Permanent Pipe Supports: Permanent pipe supports for the various types and sizes of sewer, water and utility lines shall conform to the Standard Details or the details shown on the plans. Such pipe supports shall be erected at the locations shown on the plans and/or at any other locations as necessary as determined by the Engineer.

603.4 FOUNDATION, BEDDING, HAUNCHING, BACKFILLING AND COMPACTION:

603.4.1 Foundation: The native or prepared material (when required) upon which the bedding material is placed.

603.4.2 Bedding: The material upon which the conduit or structure is to be placed shall be accurately finished to the grade or dimensions shown on the plans or as directed by the Engineer. The bottom portion of the trench shall be brought to grade so that the conduit or structure will be continuously in contact with the material on which it is being placed. If rocky or unsuitable soil is encountered, Subsection 603.2.5 applies.

Unless otherwise specified in the project plans or project specifications, the minimum material type shall be A.B.C. per Section 702.

603.4.3 Haunching: The material placed between the bedding and springline shall be constructed using the specified material and compacted for the full length of the pipe so as to distribute the load-bearing reaction uniformly to the bedding. If placed in lifts, the thickness shall not exceed 1 foot and shall be deposited and compacted to the specified density uniformly on each side of the pipe to prevent lateral displacement of the pipe. Compaction requirements shall be per Section 603.4.6. The moisture content shall be such that the specified compaction can be obtained.

Unless otherwise specified in the project plans or project specifications, the minimum material type shall be A.B.C. per Section 702. With agency approval, native or CLSM may be used as an option.

603.4.4 Initial Backfill: The material placed between the springline to 12 inches above top of pipe (minimum) shall be placed in lifts the height of which shall not exceed 1 foot or that which can be effectively compacted depending on the type of material, type of equipment and methods used. Extreme care will be taken to prevent damage to or movement of the conduit by the compaction equipment. Compaction requirements shall be per Section 603.4.6. The moisture content shall be such that the specified compaction can be obtained.

Unless otherwise specified in the project plans or project specifications, the minimum material type shall be A.B.C. per Section 702. With agency approval, native or CLSM may be used as an option.

Backfill, around utilities that are exposed during trench excavation, shall be placed in accordance with the bedding methods.

603.4.5 Final Backfill: The material placed above the initial backfill shall be placed in lifts the height of which shall not exceed that which can be effectively compacted depending on the type of material, type of equipment and methods used, and under no circumstances shall exceed 4 feet. Compaction requirements shall be per Section 601.4.6. All backfill shall be constructed per Detail 200-1 with the type of replacement noted on the plans or in the special provisions. Unless otherwise noted, backfill under single curb, curb and gutter, sidewalk, driveways, valley gutters, etc. shall be the same as the adjacent street pavement.

603.4.6 Compaction Densities: Unless otherwise provided in the plans and/or special provisions, the trench backfill shall be thoroughly compacted to not less than the densities in Table 603-2 when tested and determined by AASHTO T-99 and T-191 or ASTM D6938. When AASHTO T-99, method A or B, and T-191 are used for density determination, ARIZ-227c will be used for rock correction. All compaction discussed within this section shall be performed within 2 percentage points of optimum moisture content unless otherwise noted in the project plans or project specifications.

The density required will depend on the Type shown on the plans and/or called for in the special provisions. Density required for each type shall comply with Table 603-2.

TABLE 603-2				
MINIMUM TRENCH COMPACTION DENSITIES				
Backfill Type	**Location**	**From Surface To 2 feet Below Surface**	**From 2 feet Below Surface To 1 foot Above Top of Pipe**	**From 1 foot Above Top of Pipe to Bottom of Pipe**
I	Under any existing or proposed pavement, curb, gutter, attached sidewalk, roadway shoulders, and other areas within right-of-way subject to vehicular traffic, or when any part of the trench excavation is within 2-feet of the existing pavement, curb, or gutter.	100% for granular 95% for non-granular	95%	95%
II	On any utility easement or right-of-			

	way outside limits of Type I backfill.	95%	95%	95%
III	Around any structures (manholes, etc.) or exposed utilities.	95% for A.B.C., 100% for native or CLSM		

Note: The type required will generally be shown on the plans and the plans will govern. Where no type is shown on the plans, the type shall comply with Table 603-2.

A consideration in determining the backfill Types as shown on the plans, is based on the trench widths as shown in the Contract Documents. If these trench widths increase beyond those widths referred to above and fall within the 2-foot limit of paved surfaces and other improvements due to construction exigencies, the backfill designation for that portion within the 2-foot limit of such improvements shall be Type I even though Type II backfill is shown on the plans.

603.4.7 Compaction Methods: Unless otherwise specified in the plans and/or special provisions, the backfill material shall be uniformly compacted using mechanical work methods. When allowed by the agency, consolidation by jetting is also an acceptable compaction method; however, testing requirements shall be increased (100% increase per lift). Care will be taken to prevent damage to or movement of the conduit by the compaction method or equipment used.

Water consolidation by jetting shall be accomplished with a 1 ½ inches pipe of sufficient length to reach the bottom of the lift being settled with adequate hose attached and a water pressure of not less than 30 psi. All jetting shall be accomplished transversely across the trench at intervals of not more than 6 feet with the jetting locations on one side of the trench offset to the jetting locations on the other side of the trench. The entire lift shall be leveled and completely saturated working from the top to the bottom.

When jetting is used within the haunching and initial backfill zones, the Contractor shall be entirely responsible for establishing each lift depth so as to avoid floating the conduit being placed and shall make any repair or replacement at no cost to the Contracting Agency. However, for conduit larger than 24 inches I.D. the first lift shall not exceed the springline of the conduit and subsequent lifts shall not exceed 3 feet.

Flooding is not acceptable as a water consolidation method unless authorized in the specification or by a written change order. It will consist of the inundation of the entire lift with water and then puddle with poles or bars to insure saturation of the entire lift.

Where jetting or flooding is utilized and the surrounding material is such that it does not permit proper drainage, the Contractor shall provide, at his expense a sump and a pump at the downstream end to remove the accumulated water.

The use of water consolidation does not relieve the Contractor from the responsibility to make his own determination that such methods will not result in damage to existing improvements. The Contractor shall be responsible for any damage incurred.

If water consolidation is not successful, mechanical compaction methods shall be used to meet the compaction requirements. Backfill material may need to be removed and replaced. No exception shall be made for construction within new developments.

Where Type I backfill is required, water consolidation shall only be permitted when the material in which the trench is located and the backfill are both granular material.

603.4.8 Specifications for Granular Material: For purposes of this specification, granular material shall mean material for which the sum of the plasticity index and the percent of the material passing a No. 200 sieve shall not exceed 23. The plasticity index shall be tested in accordance with AASHTO T-146 Method A (Wet Preparation), T-89 and T-90.

603.4.9 Rights-Of-Way Belonging to Others: Backfill and compaction for irrigation lines of the Salt River Valley Water Users' Association and Roosevelt Irrigation Districts and for trenches in State of Arizona and Maricopa

County right-of-way outside the limits of the Contracting Agency shall be accomplished in accordance with their permit and/or specifications.

603.4.10 Test Holes: Boring logs shown on the plans do not constitute a part of the contract and are included for the Contractor's convenience only. It is not intended to imply that the character of the material is the same as that shown on the logs at any point other than that where the boring was made. The Contractor shall satisfy himself regarding the character and amount of rock, gravel, sand, silt, clay and water to be encountered in the work to be performed.

603.4.11 Bedding and Backfilling for Electronic, Telephonic, Telegraphic, Electrical, Oil and Gas Lines: The bedding and backfill for these underground facilities shall be native material or sand which conforms to the grading requirement of ASTM C33 for fine aggregate. When backfill material consists of aggregate base course, crushed stone, or other material containing stones, only sand will be used for foundation, and bedding. The bedding depth shall be six inches and backfill depth shall be one foot above the top of the facility. Compaction will be in accordance with Section 603.

603.5 CONTRACTOR CERTIFICATION OF INSTALLATION PROCEDURES:

When requested in the Special Provisions or by the Engineer prior to installation, the Contractor shall furnish to the Contracting Agency an affidavit (certification) from the pipe manufacturer (or his designee) stating that the Contractor is familiar with the manufacturer's suggested installation methods and procedures and the installation complies with those procedures and is consistent with MAG requirements.

Also, when required in the Special/Technical Provisions or requested by the Engineer, the pipe manufacturer or his designee will review the Contractor's methods and procedures for pipe installation in the field. The Contractor will make any adjustments in the installation as recommended by the manufacturer or his representative. If necessary, the Contractor may be required to reinstall or provide corrections to pipe installed prior to the field review at no cost to the Agency. Once the manufacturer or his representative has reviewed the Contractor's installation methods and the Contractor has adjusted his installation methods as recommended by the same, the manufacturer or his representative shall furnish to the Contracting Agency an affidavit (certification) that the Contractor's installation methods and procedures, at the time of the review, complied with the manufacturer's installation practices. The affidavit must provide the name of the manufacturer's representative witnessing the pipe installation.

603.6 PAVEMENT REPLACEMENT AND SURFACE RESTORATION:

603.6.1 Grading: The Contractor shall do such grading in the area adjacent to backfilled trenches and structures as may be necessary to leave the area in a neat and satisfactory condition approved by the Engineer.

603.6.2 Restoring Surface: All streets, alleys, driveways, sidewalks, curbs, or other surfaces, in which the surface is broken into or damaged by the installation of the new work, shall be resurfaced in kind or as specified to the satisfaction of the Engineer in accordance with Section 336.

603.6.3 Cleanup: The job site shall be left in a neat and acceptable condition. Excess soil, concrete, etc., shall be removed from the premises.

603.6.4 Temporary Pavement: The Contractor shall install temporary asphalt pavement or the first course of permanent pavement replacement in accordance with Section 336 immediately following backfilling and compaction of trenches that have been cut through existing pavement. Except as otherwise provided in Section 336, this preliminary pavement shall be maintained in a safe and reasonably smooth condition until required backfill compaction is obtained and final pavement replacement is ordered by the Engineer. Temporary paving removed shall be hauled from the job site and disposed of by the Contractor at no additional cost to the Contracting Agency.

603.7 PAYMENT:

No pay item will be included in the proposal, nor direct payment made for trench excavation, backfilling, compaction, or placement of temporary pavement. The cost of these features of the work shall be included in the

unit price per linear foot for furnishing and laying pipe.

- End of Section -

SECTION 618

STORM DRAIN CONSTRUCTION

618.1 DESCRIPTION:

This section covers rigid and flexible ~~concrete pipe line and high density polyethylene (HDPE)~~ pipe line construction used for the conveyance of irrigation water and storm drainage in streets, easements, and alley right of ways, under low hydrostatic heads.

Installation of pipe in laterals of Salt River Valley Water Users' Association or other irrigation districts shall conform to the specifications and permit of the respective irrigation district.

Installation of pipe in State Highways shall conform to the specifications and permit of the Arizona Department of Transportation.

Installation of pipe under railways shall conform to the specifications and permit of the respective railway agency. ~~All pipes installed under railroad tracks shall be reinforced concrete pipe, ASTM C76, Class V and the minimum cover over all pipes shall be as specified in the railroad permit and/or special provisions. Bedding shall be in accordance with standard details.~~

618.2 MATERIALS:

~~The concrete pipe and HDPE p~~Pipe used for storm drain construction, including specials, joints, and gaskets, ~~and testing~~ shall be according to the following Sections, ~~620 or 735, 736 and 738, except as specified below~~ or as modified by special provisions.

- Cast-in-Place Concrete Pipe, see Section 620
- Reinforced Concrete Pipe (RCP), see Section 735
- Non-Reinforced Concrete Pipe, see Section 736
- High Density Polyethylene (HDPE), see Section 738
- Steel Reinforced Polyethylene (SRPE) Pipe, see Section 739
- Polypropylene Pipe, see Section 740
- Corrugated Metal Pipe, see Section 760

~~(A) Specials: Pipe specials such as closure pieces, wyes, tees, bends, and manhole shafts shall be provided as indicated on the plans, and such specials shall be made equal in strength, diameter, and other physical characteristics to the standard straight pipe lengths by the use of extra concrete, extra reinforcing, or steel items. Drawings of specials shall be submitted to the Engineer for approval before their fabrication.~~

~~(B) Rubber Gasket Joints: When rubber gasket pipe is used, the joint shall be sealed with a continuous ring gasket made of a special composition rubber of such size and cross section as to fill the annular space provided for it. The gasket shall be the sole element depended upon to make the joint watertight, and shall have smooth surfaces, free from pits, blisters, porosity, and other imperfections.~~

~~(1) Rubber Gaskets for RCP shall be in accordance with ASTM C443 or AASHTO M-315.~~

~~(2) Rubber Gaskets for HDPE pipe shall be in accordance with Subsection 738.2.3.~~

~~(C) Water Stops: Water stops will be required when connecting HDPE pipe to concrete structures, manholes, etc. The water stop shall comply with Section 738 and will be installed per manufacturer recommendations.~~

~~(D) Cement Mortar Joints for RCP will be in accordance with Subsection 736.3.~~

618.3 CONSTRUCTION METHODS:

Trench ~~E~~excavation, ~~bedding,~~ backfilling, and compaction ~~or consolidation of backfill and bedding of trenches~~ shall be accomplished in accordance with Sections 601 for rigid pipe ~~-~~and 603 for flexible ~~for HDPE~~ pipe, except as specified below, or as modified by special provisions.

~~The Contractor shall over-excavate the trench and fill with select materials in accordance with standard details.~~

~~Where the cover over the top of the pipe is less than 10 feet, the maximum trench width is unrestricted. The pay width, however, for pavement replacement shall remain in accordance with Section 336. For pipe, with 10 feet or more cover, the maximum trench width shall be as required by Sections 601 and 603 for HDPE pipe.~~

The laying of the pipe shall be in finished trenches free from water or debris, and shall be commenced at the lowest point, with the spigot ends pointing in the direction of the flow. Each pipe shall be laid firmly and true to line and grade, in such manner as to form a close concentric joint with the adjoining pipe and to prevent sudden off-sets of the flowline. Any adjustment to line and grade shall be made by scraping away or filling in under the body of the pipe, never by wedging or blocking under the pipe ends.

Trenchless installations of piping shall conform to the requirements of Section 607.

Variation from prescribed alignment and grade shall not exceed 0.10 foot and the rate of departure from or return to established grade or alignment shall be no more than 1 inch in 10 feet of pipe line unless otherwise approved by the Engineer. For closures and deflection angles greater than 10 degrees, joints shall be made by use of a bend, specially manufactured fitting, or by a concrete collar, per standard details. Pipe shall be of the type, class and size shown on the plans or in the special provisions.

~~All pipe, for permit construction, shall be reinforced concrete pipe, ASTM C76 Class III or HDPE pipe in accordance with ASTM F894, AASHTO 252 or AASHTO 294. For reinforced concrete pipe, the minimum cover from the top of the pipe to the finished grade shall be 2 feet and the maximum cover shall be 12 feet. The minimum and maximum cover for HDPE pipe shall be as specified in the special provisions or the manufacturer's recommendations.~~

~~All pipes installed under railroad tracks shall be reinforced concrete pipe, ASTM C76, Class V and the minimum cover over all pipes shall be as specified in the railroad permit and/or special provisions. Bedding shall be in accordance with standard details.~~

~~The allowable water loss for irrigation lines shall not exceed 2 gallons per hour per 100 feet of pipe per inch of diameter of pipe, under a minimum test head of 1 foot above the top of the pipe at the upper end when tested in accordance with the procedures of Section 615.~~

618.4 JACKING PIPE: Pipe jacking shall be in accordance with Section 602.

~~At locations where jacking is required, the storm drain line shall be installed by jacking to the lengths indicated on the plans, in accordance with the following. The methods and equipment used in jacking reinforced concrete pipe conduit shall be optional with the Contractor, provided that the proposed method is first approved in writing by the Engineer. Such approval, however, shall in no way relieve the Contractor of the responsibility for damages of any nature which might occur as a result of the methods used.~~

~~Only workmen experienced in the operation of jacking concrete conduit shall be used.~~

~~The driving ends of the conduit shall be properly protected and the conduit shall be driven true to alignment and grade. The deviation from true line and grade at any single point within the jacked portion shall be limited to 0.5 feet horizontal deviation from line and ±0.2 feet vertical deviation from grade.~~

~~Any section of conduit which may show signs of failure shall be removed and replaced with a new section of precast conduit or with a cast-in-place section, which in the opinion of the Engineer is adequate to carry the loads imposed~~

~~upon it. In this respect it shall be understood that where pipe is specified on the drawings to be jacked into place the jacked pipe shall be reinforced concrete of the strength specified in these specifications and the design of such pipe is based upon superimposed loads and not upon loads which may be placed upon the pipe as a result of jacking operation. Any increase in pipe strength required in order to withstand jacking loads shall be the responsibility of the Contractor. The reinforcing shall be circular and of either single or double cage design.~~

~~Spacer blocks shall be placed in the inside circular space which will allow sufficient width for point mortaring when jacking is completed and to equalize pressures during jacking. Three grout holes per 8 foot section of pipe shall be made during manufacturing.~~

~~Double rubber gaskets and band type joints shall be provided for 36 inches diameter and larger pipe.~~

~~One hole shall be made on the top midway between the ends. Two additional holes, each approximately 1.5 feet from each end and approximately midway between the springline and top on opposite sides shall be made.~~

~~Where the nature of the soil, or the structure under which the conduit is being jacked is such that, there is increased danger of a cave-in or damage to said structure, the method of jacking the conduit shall be as specified below.~~

~~The leading section of conduit shall be equipped with a jacking head securely anchored thereto to prevent any wobble or alignment variation during jacking operations. The length and details of the jacking head shall be subject to the written approval of the Engineer. Excavation shall be carried out entirely within the jacking head and no excavation in advance thereof will be permitted. Every effort shall be made to avoid any loss of earth outside of the jacking head. Excavated material shall be removed from the conduit as excavation progresses, and no accumulation of such material within the conduit will be permitted.~~

~~Upon completion of the jacking operations, all voids around the outside face of the conduit shall be filled by grouting through each of the previously constructed grout holes to the satisfaction of the Engineer. The grout shall be a mixture of one part cement to three parts sand and a mixture by volume.~~

~~Grouting equipment and material shall be on the job before jacking operations are started in order that grouting around the jacked conduit may be started immediately after the jacking operation. After grouting, the holes in the conduit shall be repaired to the satisfaction of the Engineer.~~

618.5 ~~VIDEO~~ INSPECTION AND TESTING~~OF NEW MAINLINE STORM DRAINS~~: Testing and inspection shall be in accordance with Section 611.

~~The Contractor shall provide the Engineer with an annotated video inspection record (either VHS or DVD format) of the new mainline storm drain pipeline. The video shall clearly show all joints, seals, connecting pipes, and manholes. This video shall be provided to the Engineer, and reviewed and approved by the Engineer prior to the Contractor being allowed to place the final pavement over the storm drain line. No separate payment will be made for this inspection; the cost of the video inspection shall be included in the cost of the pipe.~~

618.6 MEASUREMENT:

(A) Main Line Pipe: Shall be the number of linear feet of pipe laid as measured along the pipe axis.

Unless hereinafter modified, measurement shall extend through manholes when no change in pipe size occurs. When a change in pipe size occurs within a manhole, unless hereinafter modified, measurement for each size will be taken to the centerline of the manhole.

(B) Connecting Pipe: Shall be the number of linear feet of pipe installed, as measured along the pipe axis from a main line pipe, or a manhole, or a catch basin to a catch basin, or a plugged end, and shall include the portions of the connecting pipe embedded in the above structures.

~~(C) Jacked Pipe: Shall be made at the ground surface and shall be the number of linear feet of ground surface undisturbed by the cut and cover construction on either side of the jacked section.~~

618.7 PAYMENT:

(A) Main Line Pipe: Will be paid at the unit price bid per linear foot, to the nearest foot, for each size and type of pipe and shall be compensation in full for furnishing and installing the type of pipe as specified and as shown on the plans including removal of obstructions, excavation, bedding, backfilling, compacting, testing, joint materials, joining, collars, and field closures.

(B) Connecting Pipe: Will be paid at the unit price bid per linear foot, to the nearest foot for each size of pipe and shall be compensation in full for furnishing and installing complete in place as shown on the plans and as specified, the connecting pipe and specials including spur connections, removal of obstructions, excavation, bedding, backfilling, compacting, joint materials, joining, collars, field closures, and testing.

~~(C) Jacked Pipe: Will be paid the same as for main line pipe.~~

- End of Section -

CITY OF BUCKEYE

Engineering Department

Case Number: 13-21

Date: 07-25-13

To: MAG Specifications and Details Committee

From: Craig Sharp

RE: Section 742 Precast Manhole Bases

Purpose: Creating a new section and details for precast manhole bases and modifying the existing cast in place manhole detail No. 420-1, 420-2, 421 and 422.

Revisions:

Creating a new section and details for precast manhole bases and modifying existing details.

Updated 07-01-14

SECTION 742

PRECAST MANHOLE

742.1 GENERAL:

This specification covers the requirements of precast manholes for gravity sanitary sewer and storm drain manhole. When noted on the plans or in the special provisions precast manhole shall be constructed according to this specification. All precast manhole manufacturers shall be NPCA (National Precast Association) certified and shall provide all NPCA certifications upon request. Loading criteria for the precast manholes shall meet or exceed the AASHTO H20 loading requirements. All precast manhole risers shall be monolithically cast to ensure water tightness and have a certified structural design and the manhole shall be cast in a fashion to achieve water tightness. This shall include a monolithic cast manhole or a multi section cast manhole which also shall have a certified structural design.

742.2 MATERIALS:

742.2.1 Concrete Materials: Concrete materials shall conform to the requirements of Section 725 and Table 725-1 for Class AA.

742.2.2 Precast Sections: Precast sections shall conform to ASTM C478, AASHTO M199. The design shall be in accordance with ACI 318 and ASTM C890 using traffic load A-16 (HS20-44).

742.2.3 Joints and Connections: Joints and connections shall conform to ASTM C425, C990 and C923.

742.3 MANHOLE PENETRATIONS:

Cut out of the precast base shall be done using a mechanical hole saw. The location of the hole shall be determined by the plans and specifications. After the core is removed from the casting the manufacturer shall coat all reinforcing with a corrosion inhibiting epoxy suitable for end use application. The thickness of the epoxy shall be per the manufacturer recommendation suitable for the end use application. Knock outs shall be formed in the location noted on the plans or specifications.

742.4 REINFORCING

Reinforcing for the base shall meet the following specifications:

- Wire ASTM A615 or A706
- Wire fabric A1064

Design of the reinforcing shall be in accordance with ACI 318 and ASTM C890

742.5 GASKETS

A flexible pipe to manhole connector shall be used whenever a pipe penetrates into a precast concrete manhole or structure. The design of the connector shall provide a flexible, watertight seal between the pipe and the concrete. The connector shall assure that a seal is made between the structure wall and the pipe by:

- Casting the connector integrally with the structure wall during the manufacturing process in a manor that will not pull out during pipe coupling.
- compressing the connector against the inside circumference of the structure by means of wedge or toggle style connection, expansion ring or other means approved by the engineer.

The connector shall be made of from materials that conform to the physical and chemical requirements outlined in the ASTM C923, and C425.

The connector shall be sized specifically for the type of pipe being used and shall be installed in accordance with the recommendations of the manufacturer.
The connection hardware shall be constructed of a 316 stainless steel meeting ASTM A480. The hardware shall ensure a water tight connection between the concrete and the pipe material and shall provide an adequate seal enough to withstand the negative air pressure test per ASTM C-1244.

742.6 LIFTING POINTS

Lifting points shall be designed and evaluated by a registered professional engineer and have a minimum safety factor of 4. There shall be a minimum of 2 lifting points on every precast manhole base. After base installation, the lifting holes shall be thoroughly packed with a pre-packaged non-shrink grout. Bent reinforcing steel bars shall not be used as lifting devices. Through lifting holes will not be allowed.

742.7 IMPERFECTIONS

742.7.1 Imperfections: Any imperfections which in the opinion of the engineer may adversely affect the performance of the precast base shall be cause for rejection.

-End of Section –

TYPE 'A' TOP

(PRECAST ECCENTRIC CONICAL TOP MANHOLE)

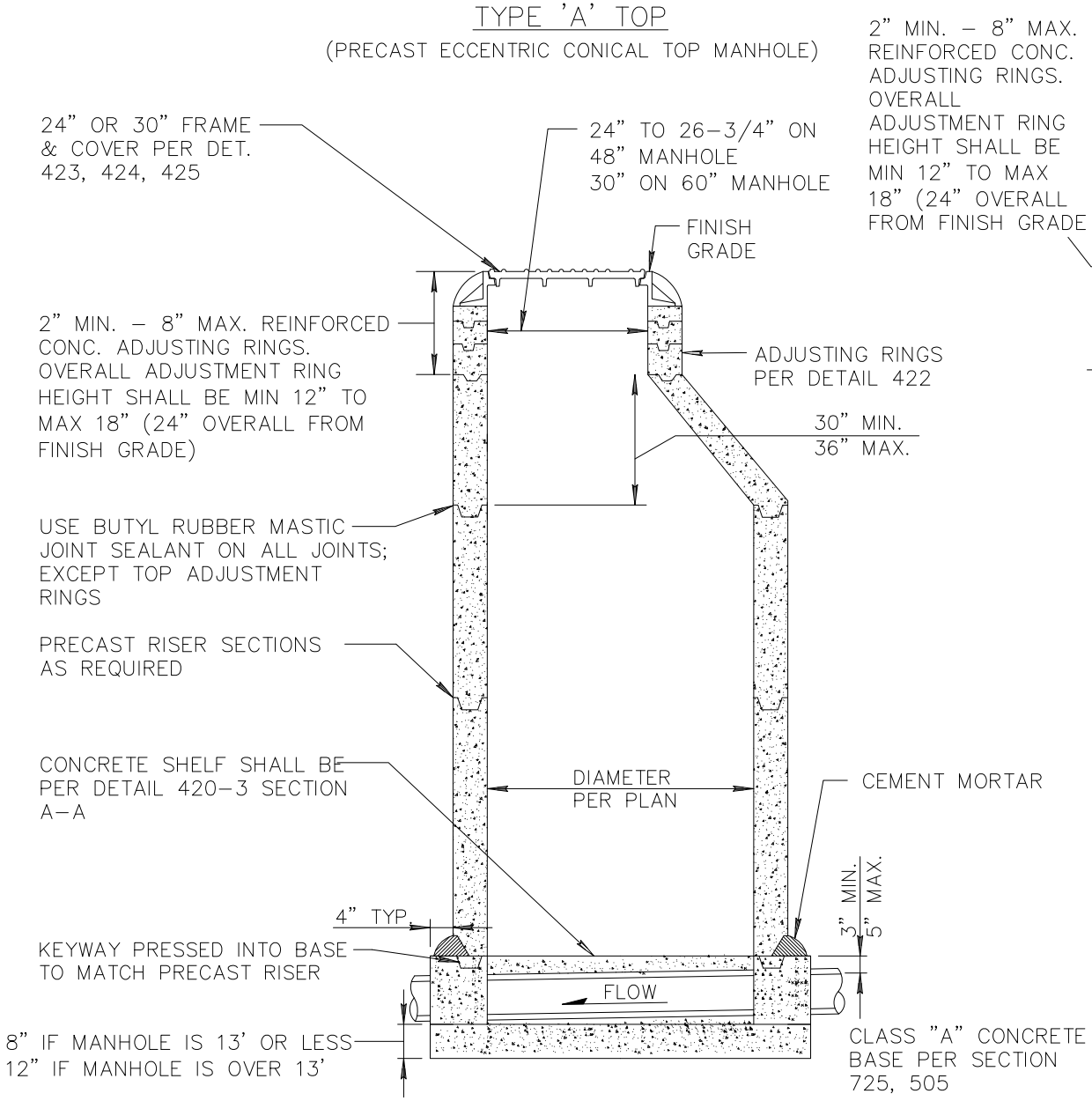

(PRECAST FLAT TOP M.H.)

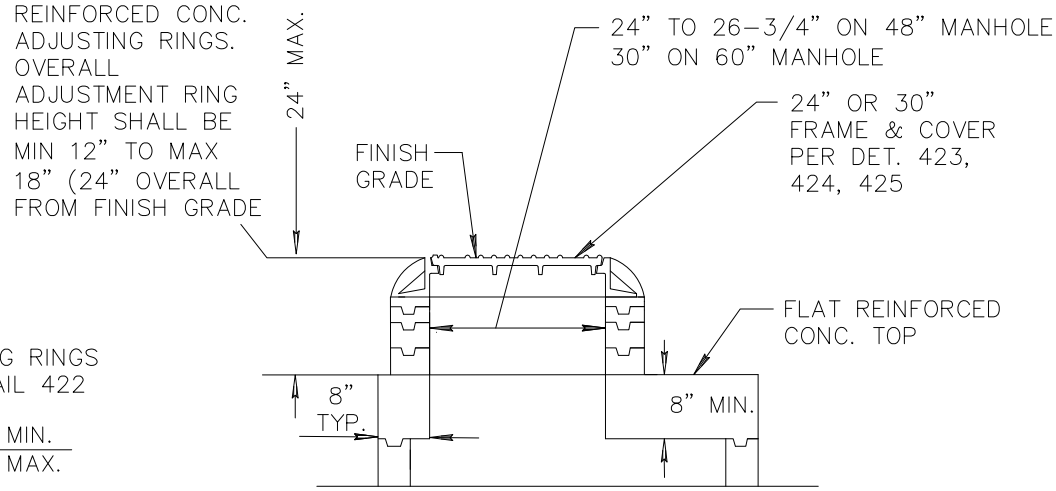

NOTES:

1. PRECAST STEEL REINFORCED MANHOLE SECTIONS SHALL BE MANUFACTURED IN ACCORDANCE WITH ASTM C 478 EXCEPT AS MODIFIED HEREIN.
2. CAST-IN-PLACE MANHOLE BASE TO BE CONSTRUCTED IN ONE PLACEMENT.
3. CAST-IN-PLACE MANHOLE BASE SHELF AND CHANNEL TO RECEIVE SMOOTH TROWEL FINISH.
4. MANHOLE COATINGS PER AGENCY.
5. SEE MAG DETAIL 422 FOR FINAL ADJUSTMENT TO GRADE.
6. ANY MANHOLE OVER 20' SHALL REQUIRE ENGINEER (STRUCTURAL) CALCS.
7. THE MANHOLE ACCESS POINT SHALL BE ORIENTED IN SUCH A WAY THAT THE OPENING IS DIRECTLY ABOVE THE LOWEST INVERT.
8. FOR PRECAST BASE SEE DETAIL 420-2.
9. FLAT TOPS SHALL ONLY BE USED WITH APPROVAL FROM THE ENGINEER.

DETAIL NO.				REVISED	DETAIL NO.
420-1	MARICOPA ASSOCIATION of GOVERNMENTS	STANDARD DETAIL ENGLISH	CONCRETE SANITARY SEWER MANHOLE	01-01-2015	420-1

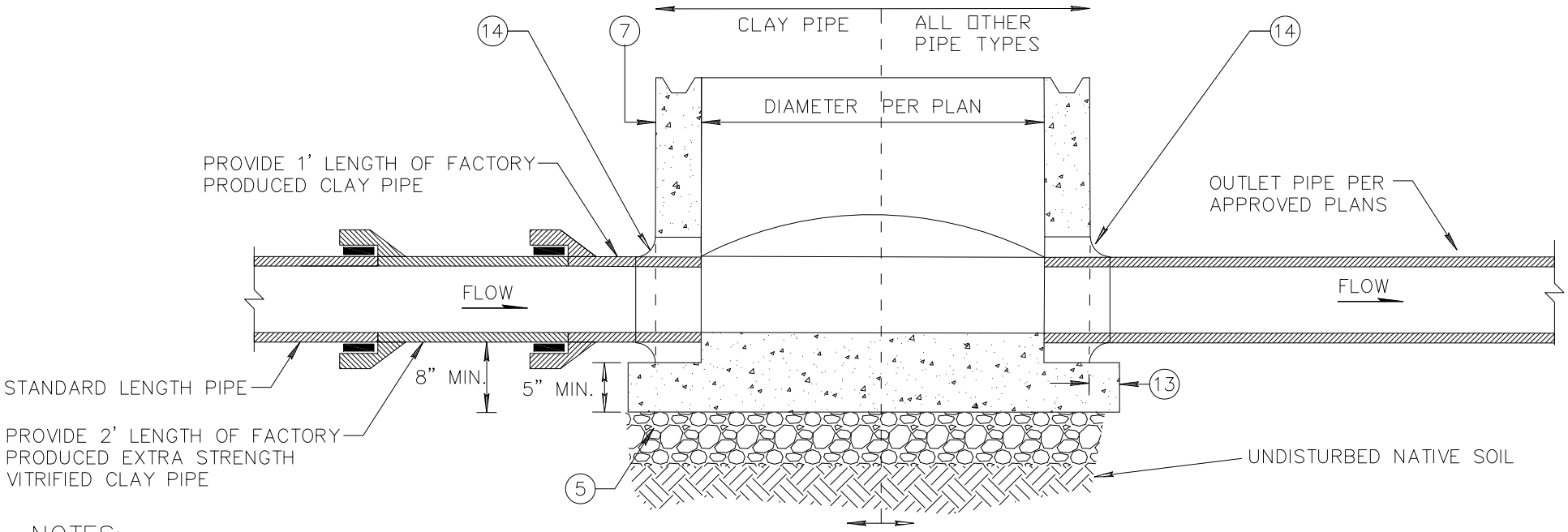

NOTES:

1. PRECAST, MANUFACTURER SHALL BE AN NATIONAL PRECAST CONCRETE ASSOCIATION (NPCA) CERTIFIED PLANT. ENTIRE PRECAST BASE SHALL BE MANUFACTURED AT THE PLANT PER ASTM C478.
2. MAG "AA" 4000 PSI CONCRETE SHALL BE USED FOR PRECAST MANHOLE BASES.
3. SPRING LINE OF CAST-IN-PLACE BELL SHALL STOP AT INSIDE FACE OF MANHOLE.
4. JOINTS FOR BARREL SECTION SHALL BE TONGUE AND GROOVE TYPE. ALL LIFTING HOLES SHALL BE SEALED WITH GROUT.
5. ALL PRECAST MANHOLE BASES SHALL BE PLACED ON 10" MINIMUM #57 ROCK PER ASTM D448 WITH AT LEAST 50% ONE FRACTURED FACE WHEN TESTED IN ACCORDANCE WITH ARIZ 212 OR 8" ABC PER SECTION 702 COMPACTED TO 100% RELATIVE DENSITY.
6. ALL MODIFICATIONS SHALL BE APPROVED BY THE ENGINEER.
7. MINIMUM WALL THICKNESS SHALL BE PER ASTM C478 (MIN 5").
8. REINFORCEMENT SHALL BE DESIGNED BY AN ARIZONA REGISTERED PROFESSIONAL ENGINEER.
9. CHANNEL TRANSITION SHALL BE CONSTANT FROM INLET TO OUTLET OF MANHOLE.
10. THERE SHALL BE NO HARD CONNECTIONS (GROUTED) INTO THE MANHOLE BASE UNLESS APPROVED BY THE ENGINEER.
11. ALL SEWER SERVICE CONNECTIONS SHALL HAVE THE SAME CONNECTION TYPES IN THE PRECAST MANHOLE BASE.
12. ALL CORE HOLES INTO THIS STRUCTURAL PRECAST BASE SHALL BE COATED WITH AN APPROVED COATING MATERIAL.
13. THE MANHOLE BOTTOM SHALL EXTEND OUTSIDE THE MANHOLE WALL A MINIMUM 6" WIDE ON 48" BASES, 7" WIDE ON 60" BASES, AND 8" WIDE ON 72" BASES. EXTENDED BOTTOM SHALL BE A MINIMUM OF 5" THICK.
14. ALL PIPE CONNECTIONS SHALL BE ELASTOMERIC GASKET/BOOT PER ASTM C425 AND ASTM F477. ADDITIONALLY, A POLYURETHANE JOINT MAY BE USED ON EXTRA STRENGTH VITRIFIED CLAY PIPE.

DETAIL NO.				REVISED	DETAIL NO.
420-2	MARICOPA ASSOCIATION of GOVERNMENTS	STANDARD DETAIL ENGLISH	PRECAST CONCRETE MANHOLE BASE	01-01-2015	420-2

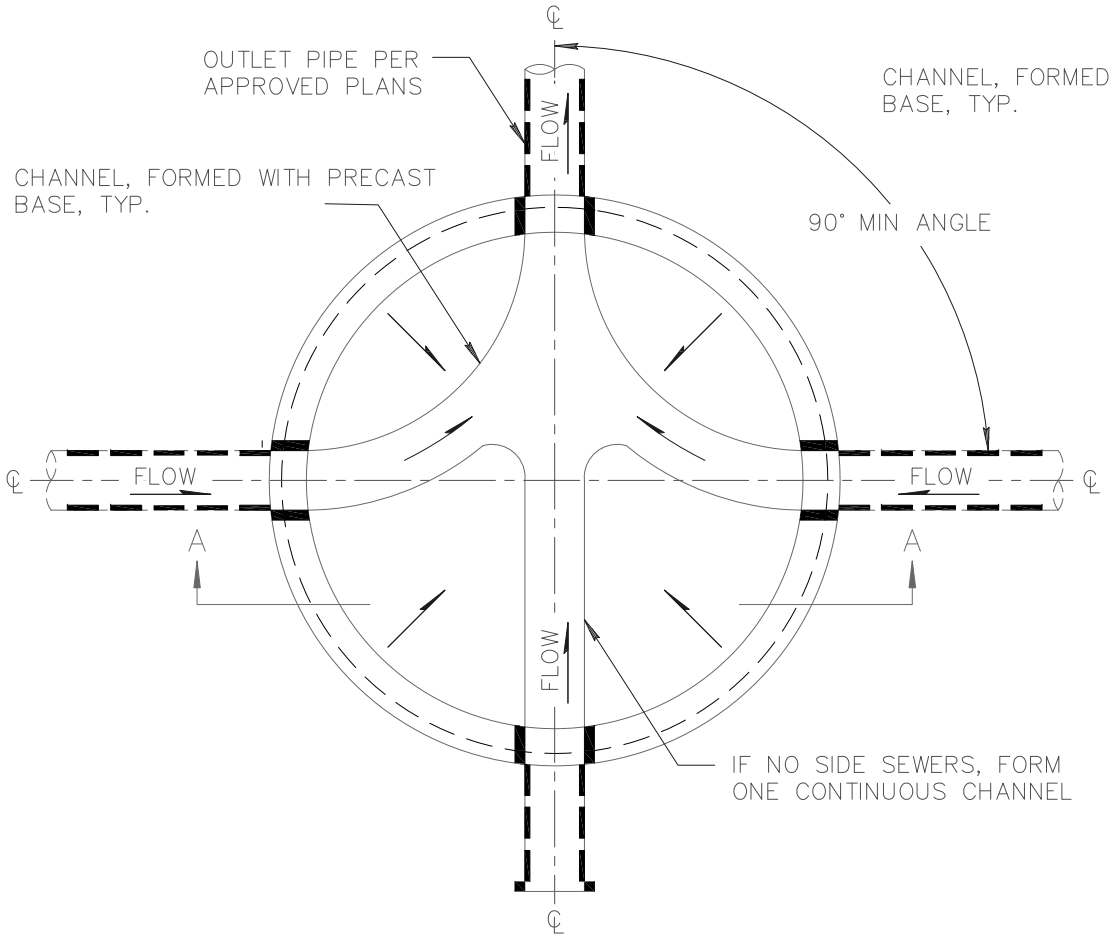

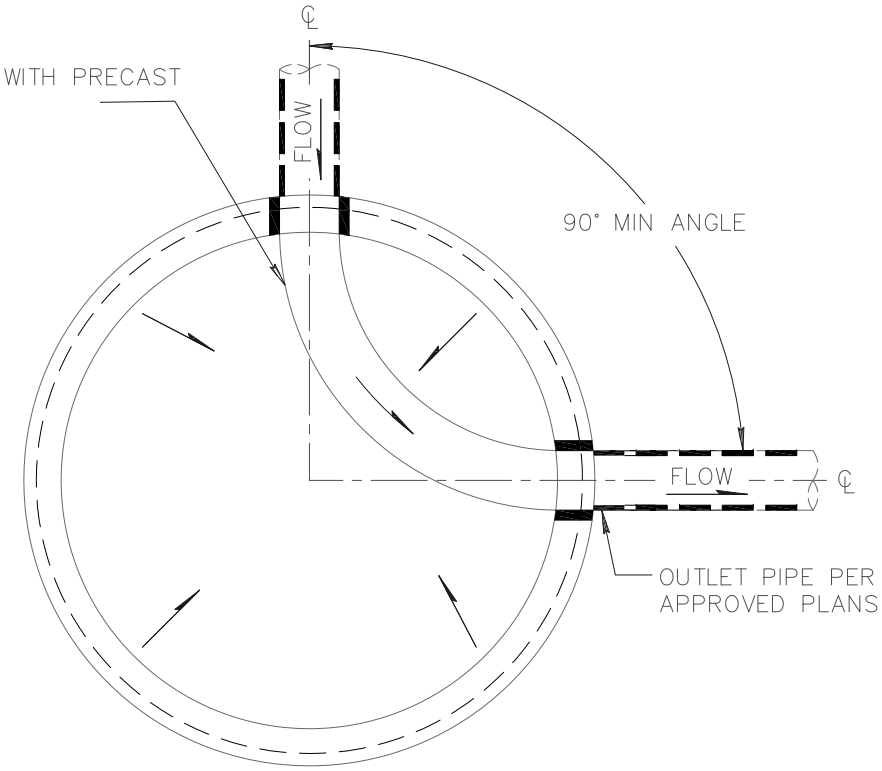

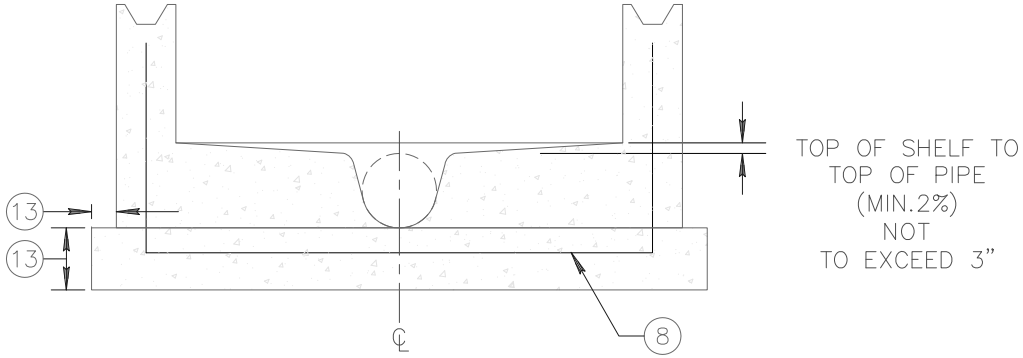

SECTION A–A

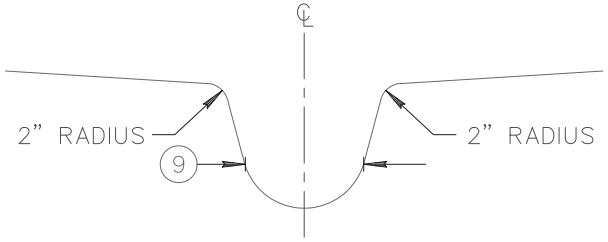

CHANNEL TRANSITION SHALL
BE CONSISTENT FROM INLET
TO OUTLET OF MANHOLE.

TYPICAL CHANNEL

SEE DETAIL 420–2 FOR NOTES

DETAIL NO.				REVISED	DETAIL NO.
420-3	MARICOPA ASSOCIATION of GOVERNMENTS	STANDARD DETAIL ENGLISH	PRECAST CONCRETE MANHOLE BASE	01-01-2015	420-3

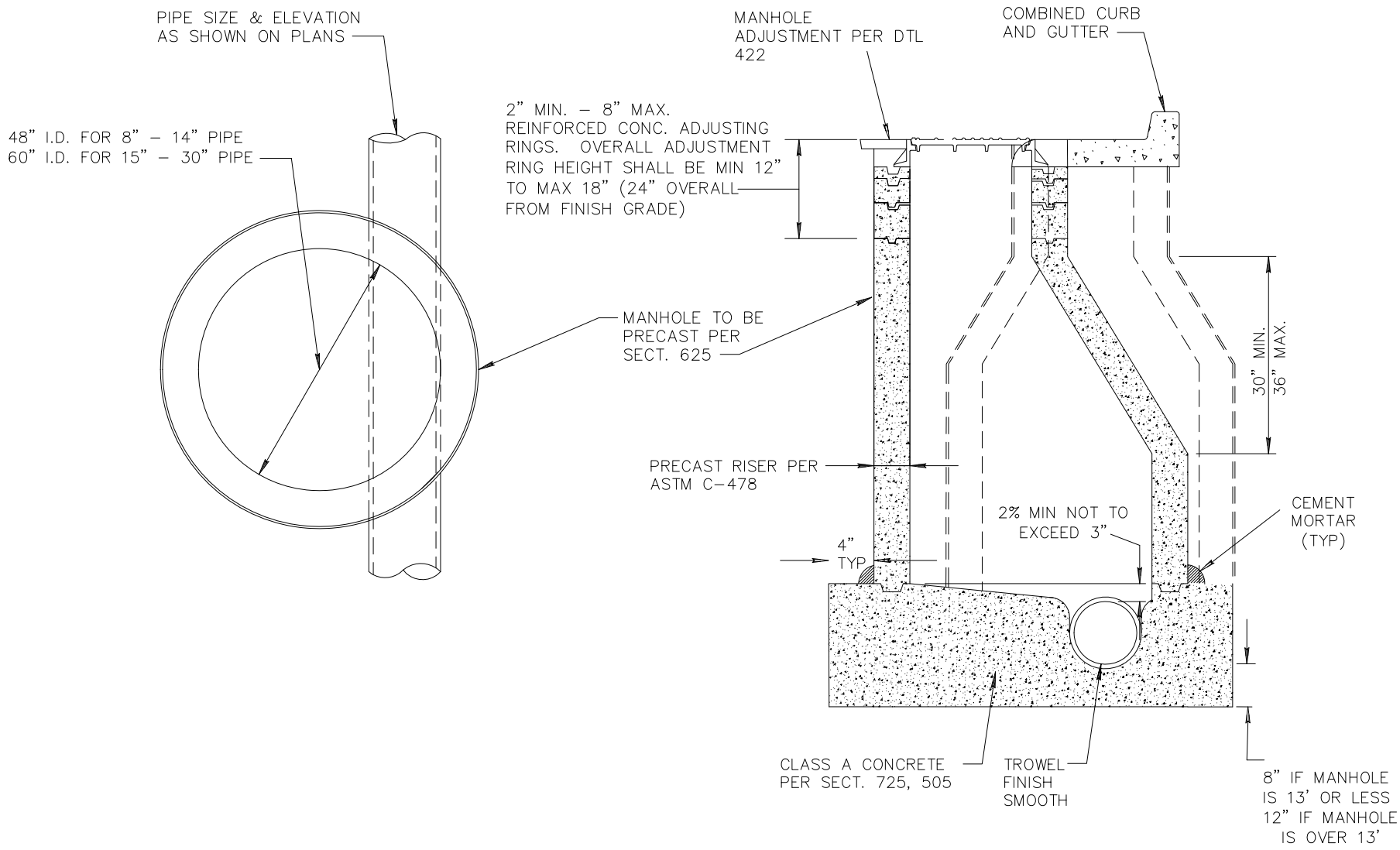

DETAIL NO.				REVISED	DETAIL NO.
421	MARICOPA ASSOCIATION of GOVERNMENTS	STANDARD DETAIL ENGLISH	OFFSET MANHOLE 8" TO 30" PIPE	01-01-2015	421

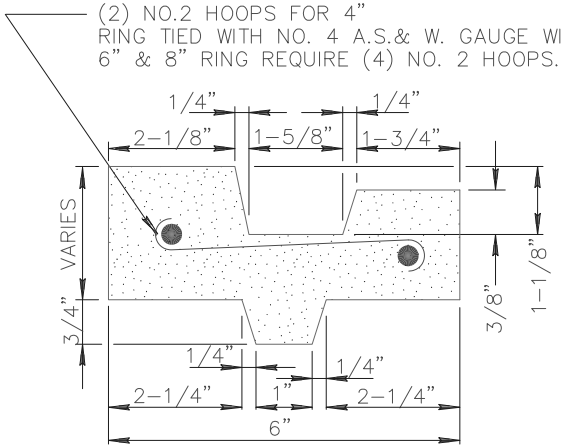

ADJUSTING RING DETAIL

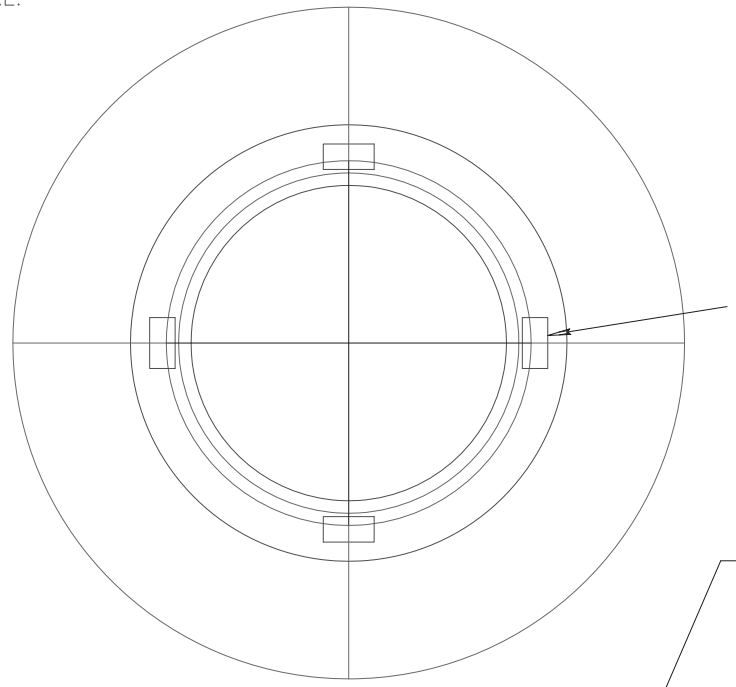

NOTES:

1. CONTRACTORS SHALL ADJUST ALL MANHOLE RINGS AND COVERS, INCLUDING MANHOLES OUTSIDE OF THE PAVEMENT.
2. ADJUSTMENT SHALL BE CONSTRUCTED PER MAG SECTION 345.
3. MANHOLE COATINGS PER AGENCY.
4. GROUT SHALL BE USED BETWEEN FRAME AND RING TO ACHIEVE WATER TIGHTNESS.

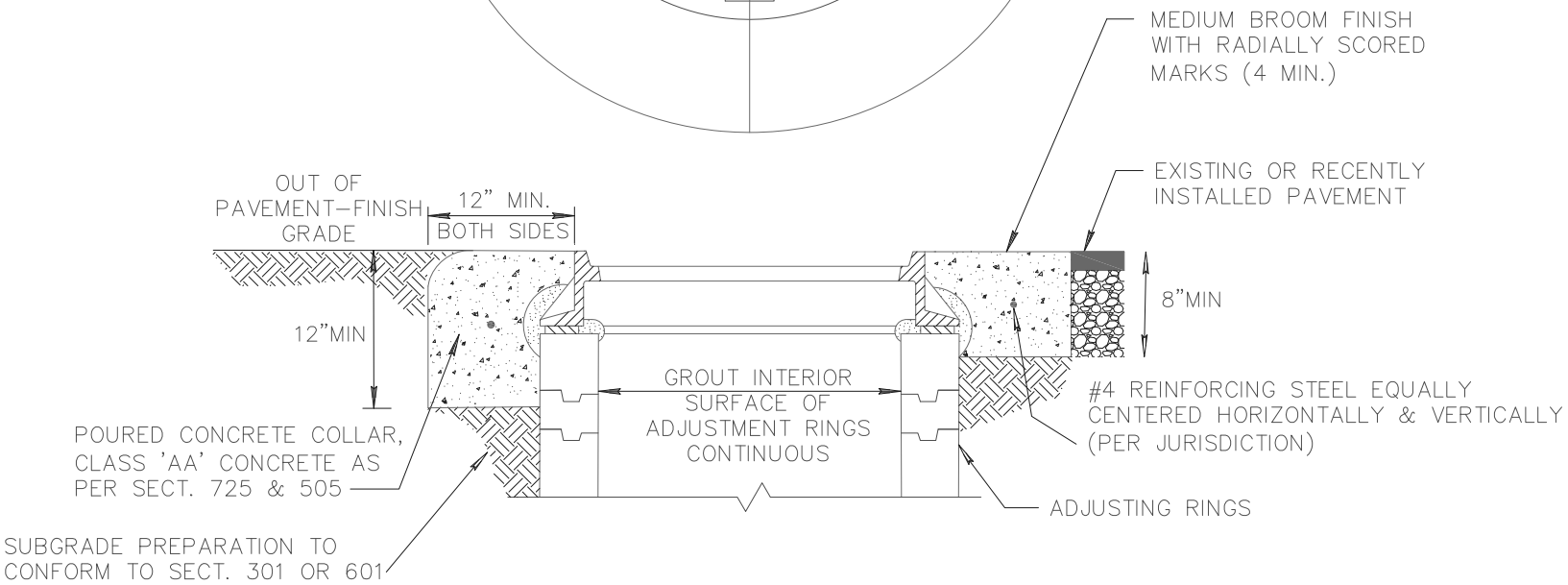

DETAIL NO.				REVISED	DETAIL NO.
422	MARICOPA ASSOCIATION of GOVERNMENTS	STANDARD DETAIL ENGLISH	MANHOLE FRAME AND COVER ADJUSTMENT	01-01-2015	422

CITY OF BUCKEYE

Engineering Department

Case Number: 13-22

Date : 06-05-13

Revised: 05-28-14

To: MAG Specifications and Details Committee

From: Craig Sharp

RE: Section 625 - Manhole construction and drop sewer connections

Section 775 – Bricks and masonry units

Purpose: Deleting references to bricks and steps in manholes

Revisions:

This revision is to delete references for the use of bricks and steps in sanitary sewer manholes.

07-01-14

SECTION 625

MANHOLE CONSTRUCTION AND DROP SEWER CONNECTIONS

625.1 DESCRIPTION:

625.1.1 Sewer Manholes: Construction shall consist of furnishing all materials and constructing manholes complete in place, as detailed, including foundation walls, ~~cast iron steps,~~ manhole frames, covers, and any incidentals thereto, at locations shown on the plans.

625.1.2 Drop Sewer Connections: Construction shall consist of furnishing all materials and constructing drop sewer connections complete in place as detailed, including foundation materials, pipe, and any incidentals thereto, at locations shown on the plans.

625.2 MATERIALS:

Unless otherwise shown on the plans or specified in the special provisions, materials to be used shall conform with the following:

If allowed by the contracting agency, brick may be used for maintenance and adjustment of the existing sanitary sewer manhole or ring and cover. Bricks for manholes see Section 775.

Cement mortar for manholes Class D, see Section 776.

Concrete for manholes Class A, for drop sewer connection Class C, Section 725.

Pipe used in manholes or drop sewer connections shall comply with pipe requirements of Section 615.

Manhole frame, cover ~~and steps~~ Section 787 and cast in accordance with standard details.

~~Plastic manhole steps, which conform to O.S.H.A. and A.S.T.M. C 487 requirements, and steel manhole steps, which are completely encapsulated in corrosion resistant rubber and conform to O.S.H.A. and A.S.T.M. C 478 requirements, may be substituted for cast iron manhole steps. The manufacturer shall furnish the Engineer a certification indicating conformance.~~
Manhole steps shall not be used.

625.3 CONSTRUCTION METHODS:

625.3.1 Manholes: Manholes shall be constructed ~~of brick,~~ of precast concrete sections, or ~~of~~ cast in place concrete, ~~with cast iron manhole steps, frames and covers, in accordance with the standard details.~~ The invert channels shall be smooth and semi-circular in shape, conforming to the inside of the adjacent sewer sections. Changes in direction of flow shall be made with a smooth curve, having a consistent radius as large as the manhole will permit with no angle points. Changes in size and grade of the channels shall be made gradually, ~~and~~ evenly, and uniformly throughout the manhole base.

Invert channels ~~may~~ shall be formed of concrete and ~~or brick masonry~~ have~~ing~~ a smooth mortared surface, may be half tile laid in concrete ~~or brick,~~ or may be constructed by laying full section of sewer pipe through the manhole and breaking out the top half after the surrounding concrete ~~or brick masonry~~ has hardened. The ~~floor~~ bench of the manhole outside the channels shall be smoothed and shall slope towards the channels.

The excavation shall be in such a manor, access is maintained around the manhole base before, during, and after placement of the manhole. ~~made cylindrical to a diameter sufficient in size to permit sheeting if necessary and leave room that the bricks may be laid in a workmanlike manner and the outside mortar coat properly applied or the precast concrete sections or forms may be properly assembled.~~

A concrete foundation of Class A concrete shall be poured in accordance with the Standard Details and Section 505.

~~Brickwork shall not be laid upon a concrete foundation less than 24 hours after such foundation has been poured.~~ No brickwork shall be laid in water, nor, except as prescribed for curing, shall water be allowed to stand or run on any brickwork until the mortar has thoroughly set. Where new work is joined to existing unfinished work, the contact surfaces of the latter shall be thoroughly cleaned and moistened.

Formatted: Justified, Widow/Orphan control, Tab stops: -0.57", Left + -0.5", Left + 0", Left + 0.25", Left + 0.38", Left + 0.5", Left + 1.5", Left + 2", Left + 2.5", Left + 3", Left + 3.5", Left + 4", Left + 4.5", Left + 5", Left + 5.5", Left + 6", Left + 6.5", Left + 7", Left + 7.5", Left + 8", Left + 8.5", Left + 9", Left + 9.5", Left + 10", Left + 10.5", Left + 11", Left + 11.5", Left + 12", Left + 12.5", Left + 13", Left

Bricks shall be thoroughly moistened prior to placing, and shall be laid in full cement mortar beds. Every course may be a header course, but at least every fourth course shall be a header course. The horizontal cross-section of the manhole shall be circular unless otherwise called for on the plans or standard details. An oval or egg-shaped section will not be permitted. ~~A double row lock course of brick in the manhole wall shall be arched over the top half of the circumference of all inlet and outlet pipes.~~ The brick manholes shall be mortared outside with ½ inch of cement mortar as shown ~~on the standard details~~. Inside of the brick wall shall be neatly pointed. The mortar coat shall be cured with a liquid membrane-forming compound conforming with Section 726 immediately after mortar has been placed and finished.

~~Frame and Cover.~~ All machined surfaces on the frame and cover shall be such that the cover will lie flat in any position in the frame and have a uniform bearing through its entire circumference. Any frame and cover which creates any noise when passed over by automobiles shall be replaced. Frames shall be set firmly in a bed of mortar true to line and grade, all as shown on the plans and as called for in these specifications.

Backfilling shall be done in accordance with the requirements for trench backfilling as stated in Section 601.

625.3.2 Drop Sewer Connections: Drop sewer connections shall be constructed in conformance with standard detail~~s, as the case may be~~ 426.

Backfilling shall be done in accordance with the requirements for trench backfilling as stated in Section 601.

625.4 MEASUREMENT:

Measurement will be per manhole installed, complete in place, regardless of depth.

625.5 PAYMENT:

Payment will be made at the contract unit price ~~bid~~ for each accepted manhole, and shall be compensation in full for furnishing and installing manhole, complete, with formed or pre-cast inverts, concrete foundation, sanitary sewer drop connections ~~ladder rungs,~~ sheeting and bracing, removal of obstructions cast iron frame and cover, excavation and backfill, paving cut replacement in excess of the applicable pay widths authorized in Section 336, and any incidentals thereto, in conformance with the plans and specifications.

~~Payment will be made at the unit price bid each, and shall be compensation in full for furnishing and installing vitrified clay pipe sanitary sewer drop connections, concrete encasement, excavation, backfilling, water settling, compaction, sheeting and bracing, removal of obstructions, paving cut replacement, in excess of the applicable pay widths authorized in Section 336, testing, and all work incidental thereto in conformance with the plans and specifications.~~

- End of Section -

Formatted: Centered

SECTION 775

BRICK AND CONCRETE MASONRY UNITS (BLOCKS)

775.1 BRICK:

If allowed by the contracting agency, brick may be used for maintenance and adjustment of the existing sanitary sewer manholes or rings and covers.

Brick shall be whole, sound, and hard burned and shall give a clear ringing sound when struck together. They shall be uniform in quality and shall be culled or sorted before delivery to the work.

775.1.1 Manhole Brick: Sewer and water manhole brick shall conform, except for dimensional tolerances, to the requirements of ASTM C32, Grade MM.

Manhole brick shall conform to Table 775-1.

TABLE 775-1			
MANHOLE BRICK DIMENSIONS			
Brick	**Inches Depth**	**Inches Width**	**Inches Length**
Standard Size Allowable Variations	2 1/4 ±1/8	3 1/2 ±1/8	7 1/2 ±1/4

The following paragraphs shall be added to the section on visual inspection:

No individual brick shall be rejected unless it shows visual evidence of major cracking. A major crack is defined as one that has at least one complete separation, for a distance of 1 3/4 inches, through the brick in any direction, including any cored area. Such a crack shall be regarded as affecting the serviceability of the brick and shall be rejected and not used in the structure.

Fifty bricks may be sampled at random intervals from any cube for visual inspection. Of the 50 samples, 45 must pass visual inspection for major cracks. Should less than 45 pass, the cube of brick shall be rejected and the brick must not be used in the structure.

775.1.2 Building Brick: Building brick shall conform to the requirements of ASTM C62, grade MW.

775.1.3 Facing Brick: Facing brick shall conform to the requirements of ASTM C216, Grade MW, Type FBS. The size, color, and texture shall be as specified on the plans or as approved by the Engineer.

775.2 CONCRETE MASONRY UNITS:

Unless otherwise noted on the plans or special provisions, concrete masonry units shall conform to ASTM C90, Normal Weight, Type I with a minimum compressive strength of 1900 psi.

The units shall be fully cured and shall have been made not less than 28 days prior to delivery.

The moisture content at the time of delivery shall not exceed 30 percent of the minimum absorption value of the units. The Contractor shall provide any protection he deems necessary to maintain the units in this condition until time of use.

The linear change from saturated to cool oven dry shall not exceed 0.0054 inches per linear foot or 0.045 of 1 percent conducted in accordance with test method in ASTM C426.

The units shall be made with normal weight aggregate conforming to ASTM C33.

The nominal size of the units shall be as indicated on the plans. The overall dimensions for width, height and length shall differ by not more than ±1/8 inch from the specified standard dimensions. Standard dimensions of units are the manufacturer's designated dimensions. Nominal dimensions of units are equal to the standard dimensions plus the thickness of one mortar joint.

No less than 5 samples of the units shall be submitted to the Engineer for approval and to show the full variance of texture and full range of color. Units used in the work shall match the approved samples. These samples may be tested for strength.

All units shall be sound and free of cracks or other defects that would interfere with the proper placing of the unit or would significantly impair the strength or permanence of the construction. When units are to be used in an exposed setting, the face or faces that are to be exposed shall not show chips or cracks, not otherwise permitted, or other imperfections when viewed from a distance of not less than 6 feet under diffused lighting.

Units that are intended to serve as a base for plaster or stucco shall have a sufficiently rough surface to afford a good bond.

End of Section -

Formatted: Centered

SECTION 625

MANHOLE CONSTRUCTION AND DROP SEWER CONNECTIONS

625.1 DESCRIPTION:

625.1.1 Sewer Manholes: Construction shall consist of furnishing all materials and constructing manholes complete in place, as detailed, including foundation walls, manhole frames, covers, and any incidentals thereto, at locations shown on the plans.

625.1.2 Drop Sewer Connections: Construction shall consist of furnishing all materials and constructing drop sewer connections complete in place as detailed, including foundation materials, pipe, and any incidentals thereto, at locations shown on the plans.

625.2 MATERIALS:

Unless otherwise shown on the plans or specified in the special provisions, materials to be used shall conform with the following:

If allowed by the contracting agency, brick may be used for maintenance and adjustment of the existing sanitary sewer manhole or ring and cover. Bricks for manholes see Section 775.

Cement mortar for manholes Class D, see Section 776.

Concrete for manholes Class A, for drop sewer connection Class C, Section 725.

Pipe used in manholes or drop sewer connections shall comply with pipe requirements of Section 615.

Manhole frame, cover Section 787 and cast in accordance with standard details.

Manhole steps shall not be used.

625.3 CONSTRUCTION METHODS:

625.3.1 Manholes: Manholes shall be constructed of precast concrete sections, or cast in place concrete. The invert channels shall be smooth and semi-circular in shape, conforming to the inside of the adjacent sewer sections. Changes in direction of flow shall be made with a smooth curve, having a consistent radius as large as the manhole will permit with no angle points. Changes in size and grade of the channels shall be made gradually, evenly, and uniformly throughout the manhole base.

Invert channels shall be formed of concrete and have a smooth mortared surface, may be half tile laid in concrete or may be constructed by laying full section of sewer pipe through the manhole and breaking out the top half after the surrounding concrete has hardened. The bench of the manhole outside the channels shall be smoothed and shall slope towards the channels.

The excavation shall be in such a manor, access is maintained around the manhole base before, during, and after placement of the manhole.
A concrete foundation of Class A concrete shall be poured in accordance with the Standard Details and Section 505.

No brickwork shall be laid in water, nor, except as prescribed for curing, shall water be allowed to stand or run on any brickwork until the mortar has thoroughly set. Where new work is joined to existing unfinished work, the contact surfaces of the latter shall be thoroughly cleaned and moistened.

Bricks shall be thoroughly moistened prior to placing, and shall be laid in full cement mortar beds. Every course may be a header course, but at least every fourth course shall be a header course. The horizontal cross-section of the manhole shall be circular unless otherwise called for on the plans or standard details. An oval or egg-shaped section will not be permitted. The brick manholes shall be mortared outside with ½ inch of cement mortar as shown. Inside of the brick wall shall be neatly pointed. The mortar coat shall be cured with a liquid membrane-forming compound conforming with Section 726 immediately after mortar has been placed and finished.

All machined surfaces on the frame and cover shall be such that the cover will lie flat in any position in the frame and have a uniform bearing through its entire circumference. Any frame and cover which creates any noise when passed over by automobiles shall be replaced. Frames shall be set firmly in a bed of mortar true to line and grade, all as shown on the plans and as called for in these specifications.

Backfilling shall be done in accordance with the requirements for trench backfilling as stated in Section 601.

625.3.2 Drop Sewer Connections: Drop sewer connections shall be constructed in conformance with standard detail 426.

Backfilling shall be done in accordance with the requirements for trench backfilling as stated in Section 601.

625.4 MEASUREMENT:

Measurement will be per manhole installed, complete in place, regardless of depth.

625.5 PAYMENT:

Payment will be made at the contract unit price for each accepted manhole, and shall be compensation in full for furnishing and installing manhole, complete, with formed or pre-cast inverts, concrete foundation, sanitary sewer drop connections sheeting and bracing, removal of obstructions cast iron frame and cover, excavation and backfill, paving cut replacement in excess of the applicable pay widths authorized in Section 336, and any incidentals thereto, in conformance with the plans and specifications.

- End of Section -

SECTION 775

BRICK AND CONCRETE MASONRY UNITS (BLOCKS)

775.1 BRICK:

If allowed by the contracting agency, brick may be used for maintenance and adjustment of the existing sanitary sewer manholes or rings and covers.

Brick shall be whole, sound, and hard burned and shall give a clear ringing sound when struck together. They shall be uniform in quality and shall be culled or sorted before delivery to the work.

775.1.1 Manhole Brick: Sewer and water manhole brick shall conform, except for dimensional tolerances, to the requirements of ASTM C32, Grade MM.

Manhole brick shall conform to Table 775-1.

TABLE 775-1			
MANHOLE BRICK DIMENSIONS			
Brick	**Inches Depth**	**Inches Width**	**Inches Length**
Standard Size	2 1/4	3 1/2	7 1/2
Allowable Variations	±1/8	±1/8	±1/4

The following paragraphs shall be added to the section on visual inspection:

No individual brick shall be rejected unless it shows visual evidence of major cracking. A major crack is defined as one that has at least one complete separation, for a distance of 1 3/4 inches, through the brick in any direction, including any cored area. Such a crack shall be regarded as affecting the serviceability of the brick and shall be rejected and not used in the structure.

Fifty bricks may be sampled at random intervals from any cube for visual inspection. Of the 50 samples, 45 must pass visual inspection for major cracks. Should less than 45 pass, the cube of brick shall be rejected and the brick must not be used in the structure.

775.1.2 Building Brick: Building brick shall conform to the requirements of ASTM C62, grade MW.

775.1.3 Facing Brick: Facing brick shall conform to the requirements of ASTM C216, Grade MW, Type FBS. The size, color, and texture shall be as specified on the plans or as approved by the Engineer.

775.2 CONCRETE MASONRY UNITS:

Unless otherwise noted on the plans or special provisions, concrete masonry units shall conform to ASTM C90, Normal Weight, Type I with a minimum compressive strength of 1900 psi.

The units shall be fully cured and shall have been made not less than 28 days prior to delivery.

The moisture content at the time of delivery shall not exceed 30 percent of the minimum absorption value of the units. The Contractor shall provide any protection he deems necessary to maintain the units in this condition until time of use.

The linear change from saturated to cool oven dry shall not exceed 0.0054 inches per linear foot or 0.045 of 1 percent conducted in accordance with test method in ASTM C426.

The units shall be made with normal weight aggregate conforming to ASTM C33.

The nominal size of the units shall be as indicated on the plans. The overall dimensions for width, height and length shall differ by not more than ±1/8 inch from the specified standard dimensions. Standard dimensions of units are the manufacturer's designated dimensions. Nominal dimensions of units are equal to the standard dimensions plus the thickness of one mortar joint.

No less than 5 samples of the units shall be submitted to the Engineer for approval and to show the full variance of texture and full range of color. Units used in the work shall match the approved samples. These samples may be tested for strength. All units shall be sound and free of cracks or other defects that would interfere with the proper placing of the unit or would significantly impair the strength or permanence of the construction. When units are to be used in an exposed setting, the face or faces that are to be exposed shall not show chips or cracks, not otherwise permitted, or other imperfections when viewed from a distance of not less than 6 feet under diffused lighting.

Units that are intended to serve as a base for plaster or stucco shall have a sufficiently rough surface to afford a good bond.

End of Section -

SECTION 324 – REVISED 6-4-14

PORTLAND CEMENT CONCRETE PAVEMENT (PCCP)

324.1 DESCRIPTION:

This item shall consist of construction of a pavement composed of plain jointed portland cement concrete on a prepared subgrade. The Contractor shall furnish all labor, materials and equipment necessary for the construction of the pavement in accordance with these specifications and in reasonably close conformity to the lines, grades, thicknesses and details indicated by the plans or as established by the Engineer. All tests shall be performed by a laboratory approved by the Engineer.

324.2 MATERIALS:

324.2.1 Portland Cement Concrete: Portland cement concrete shall conform to the applicable requirements of MAG Standard Specifications Section 725 and the additional requirements of this section.

Concrete shall comply with Table 725-1 for Class AA, 4000 psi unless otherwise specified by the Engineer.

The maximum concrete slump shall be as determined by the approved mix design in accordance with Section 725.9.(A)(1).

324.2.2 Concrete Materials: Fine aggregates shall have an average Sand Equivalent of not less than 75 when tested in accordance with the requirements of AASHTO T-176 or ASTM D-2419.

324.2.3 Reinforcement: Tie bars shall be deformed billet steel reinforcing bars conforming to the requirements of ASTM A-615, Grade 40.

Dowel or load transfer bars shall conform to the requirements of ASTM A-615, Grade 40. .
An approved support system shall be used to hold bars in position.

324.2.4 Curing Materials: Materials for curing concrete shall conform to the requirements of Section 726.

324.2.5 Joint Materials: Joint sealant shall be poured type, conforming to the requirements of Section 729.2 or as approved by the Engineer. Preformed expansion joint filler shall conform to the requirements Section 729.1 or as approved by the Engineer.

324.3 CONSTRUCTION METHODS:

324.3.1 General: Pavement shall be constructed with mechanical equipment utilizing stationary side forms or by the use of slipform paving equipment without stationary side forms. Manual methods of placing and finishing concrete with stationary side forms may be permitted by the Engineer for areas inaccessible for mechanical equipment.

All curb and gutter Shall have the dame Class of concrete as the adjacent PCCP. Gutter sections shall have the same thickness as the PCCP section. All curbs or combined curb and gutter joints shall align with roadway joints.

324.3.2 Equipment: Design, capacity, and mechanical condition of equipment and tools necessary for handling materials and performing all parts of the work shall be approved by the Engineer. Equipment shall be at the jobsite sufficiently ahead of the start of concrete paving operations to permit thorough examination and approval by the Engineer prior to start of concrete paving.

Equipment used to place concrete may consist of one or more machines, shall be capable of uniformly distributing and consolidating the concrete as it is placed without segregation and shall be capable of producing concrete pavement which will conform to the required cross-section with a minimum of hand work. The number and capacity of machines furnished shall be adequate to perform the work required at a rate equal to the concrete delivery rate.

DRAFT

Vibrators shall be used to consolidate concrete; the rate of vibration shall be not less than 3,500 cycles per minute for surface vibrators and not less than 8,000 cycles per minute for internal vibrators. Power to vibrators mounted on mechanical equipment shall be so connected that vibration ceases when forward or backward motion of the machine is stopped. Contractor shall furnish a tachometer or other suitable device for measuring and indicating the frequency of vibration.

Slipform pavers shall be equipped with high frequency internal vibrators mounted with axes either parallel or normal to pavement alignment for the full paving width. Vibrators mounted with axes parallel with pavement alignment shall be spaced at intervals not to exceed 24 inches, measured center-to-center. Vibrators mounted with axes normal to pavement alignment shall be spaced so that lateral clearance between individual vibrating units does not exceed 6 inches.

Slipform paving equipment which will be wholly or partially supported on subgrade shall be equipped with traveling side forms of sufficient dimensions, shape and strength to support the concrete at free edges laterally for a sufficient length of time during placement to produce pavement of the required cross-section, and shall be equipped and operate with automatic sensing and control devices such that the machine automatically senses deviations from the established guideline and performs the necessary corrective maneuvers to overcome variations from correct grade and alignment.

When concrete will be placed adjacent to existing pavement or curb and gutter, that part of the equipment supported on the existing pavement or curb and gutter shall be equipped with protective pads on crawler tracks or rubber-tired wheels with bearing surfaces offset a sufficient distance from the edge of the pavement or curb and gutter to avoid edge damage, or the surface of the existing pavement or curb and gutter shall be otherwise protected against such damage in a manner approved by the Engineer.

324.3.3 Subgrade and Base Preparation: Subgrade and base shall conform to the applicable compaction requirements of section 601 and elevation tolerances specified for the material involved, shall be kept smooth and compacted, and shall be free of all loose and extraneous material when concrete is placed.

The surface of the subgrade shall be uniformly moist when concrete is placed. The surface of the subgrade shall be moistened immediately prior to placement of concrete if necessary to produce a uniformly moist condition. Any excess water standing in pools or flowing on the surface shall be removed prior to placing concrete.

324.3.4 Stationary Side Forms and Setting of Forms: Side form sections shall be straight, free from warps, bends, indentations or other defects. Side forms shall be of metal, have a base width of at least four inches and a minimum depth equal to the thickness of the pavement. No section shall show a variation from a true plane greater than 1/8 inch in ten feet on the top of the form or more than 1/4 inch in ten feet on the inside face. Flexible or curved forms of proper radius shall be used for curves of 100 feet radius or less. Suitable materials other than metal may be used to form end closures or at other locations where use of metal forms is not practical. Forms shall be thoroughly cleaned and oiled each time they are used.

Forms shall be of such cross section and strength and so secured and supported on the subgrade as to resist the pressure of the concrete when placed and the impact and vibration of any equipment they are to support without springing or settlement. The method of connection between sections shall be such that the joints shall not move in any direction.

Subgrade under forms shall be compacted and cut to grade so that the form when set will be uniformly supported for its entire length at the specified elevation. Forms shall be so supported and secured during the entire operation of placing and finishing that they will not deviate vertically at any point more than 1/8 inch from the proper elevation. Forms shall be set to the required lines and grades well in advance and for a distance sufficient to prevent delay in placing concrete, and shall be approved by the Engineer prior to placing concrete. When any form has been disturbed or any grade has become unstable, the form shall be reset and rechecked.

DRAFT

Side forms shall remain in place until the day after placing concrete, and in all cases until the edge of the pavement no longer requires the protection of the forms. Forms shall be carefully removed in such a manner as to avoid damage to the pavement. Use of pry bars between the pavement and the forms will not be permitted.

324.3.5 Placing, Spreading and Compacting: Construction equipment shall not operate on the subgrade in the paving lane when conditions of the job will permit operation from outside the lane. When job conditions make it necessary to operate equipment on the subgrade in the paving lane, suitable runways or other precautions shall be taken to prevent rutting or displacement of subgrade material. The grade shall be checked and corrected immediately ahead of concrete placement and all disturbed grade shall be properly recompacted. Except when otherwise approved by the Engineer, concrete shall be deposited on the subgrade and spread full width using mechanical methods that result in minimal handling and segregation. Necessary hand spreading shall be done with shovels, not rakes. Placement shall be continuous between transverse joints without the use of intermediate bulkheads.

The Contractor shall make adequate advance arrangements for preventing delay in delivery and placing of concrete. An interval of more than 15 minutes between placing of any two consecutive batches shall constitute cause for stopping operations, and Contractor shall remove all concrete placed beyond the last scheduled joint or install a ~~construction~~ joint ~~in the concrete already placed~~ **of the type** and at the location as directed by the Engineer.

Concrete shall be deposited as near to expansion and construction joints as possible without disturbing them but shall not be dumped onto a joint assembly. Concrete shall be thoroughly consolidated against and along the faces of all forms, adjacent pavement or curb and gutter, and on both sides of all joint assemblies. Vibrators shall not be permitted to come in contact with joint assemblies, the grade, or side forms, and shall not be operated longer than 15 seconds in any one location.

Manual methods of placing, spreading, and compacting may be used in the construction of pavement lanes of irregular width or widths less than 10 feet, and sections of intersections or other locations with complex variable surface configurations when permitted by the Engineer. Workmen shall not be allowed to walk in the freshly placed concrete.

324.3.6 Shaping and Initial Finishing: Concrete shall be struck off, consolidated, and float-finished with a slipform paver, mechanical finishing machine, vibrating screed, or by hand finishing methods when approved by the Engineer so that the complete pavement will conform to the thickness and cross section requirements of the plans and specifications. When the pavement being constructed is contiguous to existing parallel concrete pavement or curb and gutter, the elevation of the new pavement surface shall conform as closely as possible to the elevation of the existing pavement or gutter surface ~~and~~ in a manner which will prevent ponding**. ~~with t~~T**he difference in elevation **shall** not ~~to~~ exceed 1/4 inch.

Water shall not be applied to the pavement surface during screeding and finishing operations in excess of the amount lost by evaporation. Adding water to the surface of the concrete to assist in finishing operations shall not be permitted. When applications of water to the surface are required to prevent rapid evaporation of water from the surface during finishing operations, it shall be applied as a fog spray and with approved spray equipment.

324.3.6 (a) Slipform Supported on Subgrade Method: When concrete pavement will be placed with slipform paving equipment which will be supported and operate on the subgrade, the subgrade and slipform paver track area shall be brought to proper grade and cross section by means of a properly designed and operated machine. The equipment shall spread, consolidate, screed and float-finish the concrete in one complete pass of the machine. The machine shall be operated with as nearly a continuous forward movement as possible and all paving operations shall be so coordinated as to provide uniform progress with stopping and starting of the paver held to a minimum. Sliding side forms shall be rigidly held together to prevent spreading. Any edge slump of the pavement, exclusive of edge rounding, in excess of 1/4 inch shall be corrected.

No abrupt changes in longitudinal alignment of the pavement will be permitted. The horizontal deviation shall not exceed 1 inch from the alignment established by the Engineer.

DRAFT

While concrete is being spread, compacted and shaped, vibrating units shall be operated within fresh concrete so that the longitudinal axis, at the center of each unit, is not more than 6 inches above the top of the subgrade. Amplitude of vibration shall be sufficient to be perceptible on the surface of concrete along the entire length of vibrating units and for a distance of at least one foot.

324.3.6 (b) Mechanical Equipment Supported on Fixed Form Method: When concrete is spread without the use of internal vibration, the finishing machine shall be equipped with vibrating equipment that will internally vibrate the concrete for the full paving width and with not less than two oscillating or reciprocating screeds. Concrete shall be struck off and consolidated so that the surface will conform to the finished grade and cross section shown on the project plans and with sufficient material on the surface for floating operations.

After the concrete has been struck off and consolidated, it shall be floated with a longitudinal float of a type approved by the Engineer.

A slipform paver or a single machine which will effectively spread, consolidate, screed, and float in one operation may be used in lieu of separate finishing and floating equipment.

324.3.6 (C) Manual Methods with Fixed Forms: Concrete shall be deposited, spread and struck off to such an elevation that, when properly consolidated, the surface will conform to the required lines and grades. Concrete shall be consolidated by internal vibration as it is struck off with a screed. A slight excess of concrete shall be kept in front of the screed at all times during the strike-off operation.

After consolidation and screeding, concrete shall be tamped to the proper surface elevation and cross section using either a heavy plank with a length in excess of the width of pavement being placed by one foot or more, or with a mechanical vibrating unit spanning the full width between forms. The tamping plank, if used, shall be stiffened as necessary to prevent sag and shall have the lower tamping edge shod with metal. The tamping plank shall be moved forward with a combined vertical tamping and longitudinal screeding motion so that the concrete will be thoroughly consolidated and the surface screeded to the required elevation. A small surplus of concrete shall be kept in front of the tamper or vibrating unit. Tamping or vibrating shall continue until the specified cross section is obtained and the mortar flushed slightly to the surface. On grades in excess of 5 percent a second strike board shall follow from 25 to 50 feet behind the tamper or vibrating unit and shall be used in the same manner to remove waves caused by the flow of concrete behind the first strike board.

Methods other than the tamping plank may be utilized for screeding when approved by the Engineer.

Pavement shall be finished smooth and true to grade with suitable manually operated floats or powered finishing equipment.

324.3.7 Final Finishing: After the pavement has been float-finished, it shall be scraped with a 10-foot long straightedge equipped with a handle to permit operations from the edge of the pavement, and excess water and laitance shall be removed from the surface. The straightedge shall be operated parallel to the centerline of the pavement and shall be moved forward one-half length after each pass. Irregularities shall be corrected by adding or removing concrete, and disturbed places shall be again straight-edged.

Long-handled floats shall be used only in areas not accessible to finishing equipment and in emergencies, and use of such floats shall be confined to a minimum.

The addition of water to the surface of the concrete to assist in finishing operations shall not be permitted unless approved by the Engineer. When the evaporation rate on the concrete surface exceeds the rate of bleeding of the concrete, measures shall be taken to prevent the rapid evaporation of water from the surface during finishing operations. When allowed by the Engineer, the addition of water to the surface may be permitted when applied as a fog spray with approved spray equipment immediately after screeding and/or between finishing operations. A commercial evaporation reducer that forms a monomolecular film may also be sprayed onto the concrete surface in accordance with the Manufacturer's recommendations. When either of these methods is approved and used it does not take the place of proper curing methods per Section 3.8.

DRAFT

Pavement edges and joints shall be edged in accordance with details shown on the project plans or as directed by the Engineer.

In advance of curing operations, pavement shall be textured. Texturing shall be performed with an artificial turf drag with a board added to assure the weight needed to obtain an approved surface. Artificial turf shall be a molded composite structure with polyethylene face, nylon and polyester backing, a pile height of 0.85 inches, and total weight of 75 oz./sq. yd. The surface obtained during initial surface texturing shall be subject to approval by the Engineer. The texturing approved on the initial construction shall not be changed without the Engineer's approval. Each time the construction is stopped or causes the texturing to stop, the artificial turf must be shaken clean before continuing.

324.3.8 Curing: Curing shall begin immediately following surface texturing and edging. Before concrete placement begins Contractor shall have at hand and ready to install the materials and equipment needed for adequate curing.

After finishing operations have been completed, the newly placed concrete shall be cured by moist curing methods, by application of a white pigmented liquid membrane compound conforming to the requirements of Section 726, or by a combination of these methods. All surfaces not covered by reasonably waterproof forms shall be kept damp by applying water with a nozzle that so atomizes the flow of water that a fog mist and not a spray is formed until the surface is covered with liquid membrane compound, the surface has hardened sufficiently to permit sprinkling of the surface, or moist curing by covering with wet burlap or other approved materials can be initiated. Moisture from the nozzle shall not be applied under pressure directly upon the concrete and shall not be allowed to accumulate on the concrete in a quantity sufficient to cause a flow and erode the surface. Moist curing shall be continued until liquid membrane curing compound or other type of curing membrane is applied.

Membrane curing compound shall be applied to all pavement by automatic mechanical method from a construction bridge.

The edges of concrete slabs exposed by the removal of forms shall be protected immediately to provide these exposed surfaces with continuous curing treatment equal to the method selected for curing the pavement surface.

The membrane method of curing may be applied behind the final finishing operation after all free water has disappeared from the surface. Complete and uniform coverage at the rate of one gallon per 100 square feet, or as otherwise recommended by the manufacturer, shall be required. Compound shall be kept agitated to prevent pigment from settling.

324.3.9 Joints:

324.3.9.1 General: Joints shall be provided in the pavement of the type, dimensions and at the locations as indicated in the plans or as specified herein.

Joints in concrete pavement will be designated as transverse expansion joints, longitudinal or transverse construction joints, longitudinal or transverse weakened plane joints, or isolation joints. The faces of all joints shall be perpendicular to the pavement surface. Joints shall be constructed in accordance with the details shown or referenced in the plans and in accordance with the following provisions.

At all times prior to acceptance of the construction, joints shall be maintained clean and free of all soil, gravel, and other foreign material except approved types of joint filler materials.

324.3.9.2 Longitudinal Joints: Longitudinal joints shall be weakened plane or construction joints. Longitudinal weakened plane joints shall be constructed by sawing or by insertion of a parting strip in the plastic concrete to be left in place. Longitudinal construction joints shall be constructed with tie bars or keyways as indicated in the plans.

324.3.9.3 Transverse Joints: Transverse joints shall be weakened plane, construction or expansion joints. All transverse weakened plane joints will be constructed by sawing and in accordance with the details shown in the project plans. Transverse construction joints shall be constructed in accordance with the details shown or referenced in the project plans. Transverse expansion joints shall be constructed in accordance with the details shown or referenced in the project plans.

DRAFT

Dowel bars when required shall be supported with an approved support system.

324.3.9.4 Joint Location: Longitudinal and transverse joints shall be constructed at locations as indicated in the project plans.

Isolation joints shall be provided around manholes, catch basins, or other elements which extend into or project through the pavement and act as point of restraint to horizontal or vertical movement of the pavement. Isolation joints shall be located in accordance with Detail 224 or as directed by the Engineer.

324.3.9.5 Construction of Joints:

324.3.9.5.1 Sawed Joints: Sawed joints shall be constructed by cutting a groove in the pavement using a single or multiple-blade power saw. The groove shall be cut to the dimensions shown on the project plans. Suitable guidelines or devices shall be used to ensure joints are cut true to the lines as shown on the project plans.

If joints are sawed in stages, the initial saw cut shall be of the minimum width specified and sawed to the required depth. The depth of the initial saw cut in the construction of weakened plane joints shall be a minimum of 1/4 of slab thickness.

Sawing of weakened plane joints shall be done before uncontrolled cracking takes place, and after the concrete has hardened to the extent that tearing or raveling of the edges of the saw cut is not excessive. The exact time for all sawing shall be determined by the Contractor when not otherwise specified.

Any procedure for sawing joints that result in premature, uncontrolled cracking shall be revised immediately. The Contractor shall be responsible for replacing or repairing areas containing uncontrolled cracking and for repairing spalled or chipped concrete along the edges of sawed joints to the satisfaction of the Engineer.

After saw cutting of the joint and just prior to sealing the joint, the internal joint surfaces shall be cleaned of all dirt, curing compound residue, laitance and other foreign materials. The internal joint surface shall be defined as the sawed portion of the joint and the resultant crack for the full depth of the pavement.

Sealing of sawed joints where required shall be completed prior to the opening of the pavement to traffic unless otherwise approved by the Engineer. When delayed sealing of sawed joints is permitted, saw cuts and formed recess to be filled with sealant shall be protected to ensure thorough curing of the concrete along the edges of the joint recesses and to prevent entry of foreign materials into the joint. At the Contractor's option, inert compressible joint filler material such as plastic backer rod or upholstery cord may be inserted into joints immediately after sawing or forming of the joint recess to provide curing protection and prevent entry of foreign material. If absorptive filler material is used, it shall be thoroughly moistened either before or immediately after installation in the sawed groove. When filler material is rope, or similar material which does not fill the entire depth of sawed groove, it shall be depressed not less than ½ inch below the pavement surface before the pavement is opened to traffic.

324.3.9.5.2 Expansion and Construction Joints: Longitudinal and transverse expansion and construction joints shall be as required by the project plans.

324.3.9.5.3 Isolation Joints: Isolation joints **unless otherwise detailed in construction documents** shall be 1/2 inch wide expansion joints in accordance with Detail 224 or as directed by the Engineer.

324.3.9.5.4 Sealing of Joints: Sealant shall be applied in accordance with the sealant manufacturer's recommendations. A primer shall be furnished and applied after the joint has been cleaned and prepared to receive sealant when indicated in the manufacturer's recommendations.

Prior to the application of the sealant, an approved type of inert, compressible joint filler material such as plastic backer rod or upholstery cord, or an approved type of bond breaker, shall be inserted along the joint in accordance with the details shown on the project plans. The joint shall then be filled with sealant to a level not less than 1/8 inch or more than 1/4 inch below the elevation of the pavement surface adjacent to the joint edge.

DRAFT

The equipment used to apply sealant shall be as recommended by the sealant manufacturer. Sealant shall not be spilled on the surface of the concrete pavement, and Contractor shall remove any sealant inadvertently spilled on the pavement surface.

324.3.9.5.5 Repair of Cracks, Spalls, Raveling and Tearing: Contractor shall be responsible for replacing or repairing all areas of pavement containing uncontrolled cracking, surface spalls, or other types of surface. Repairs when authorized shall be made and completed by methods acceptable to the Engineer.

324.4 Tests of Finished Pavement:

324.4.1 Smoothness: The pavement surface including pavement in intersections will be tested with a ten-foot straight-edge placed parallel to the centerline of the pavement in each lane. Ordinates measured from the face of the straight-edge to pavement surface shall at no place exceed one-quarter inch. Areas that do not meet the required surface accuracy as determined by straight-edge testing shall be marked, and Contractor shall at his own expense and as required by the Engineer either:

(1) Grind down areas higher than 1/4 inch but not more than 1/2 inch above the correct surface.

(2) Correct areas lower than 1/4 inch but not lower than 1/2 inch below the correct surface by grinding down the adjacent areas.

(3) Remove and replace pavement when the deviation exceeds 1/2 inch from the correct surface. Area replaced shall be of a length, width and depth as required to allow formation of a new slab of the required quality. The area replaced shall be compatible with the joint layout shown on the project plans as determined by the Engineer.

After grinding, the finished surface of the ground area shall be provided with a uniform texture acceptable to the Engineer. The method of texturing shall be approved by the Engineer.

324.4.2 Pavement Thickness: Concrete pavement shall be constructed in accordance with the thickness requirements of the plans and specifications. Tolerances for base and subgrade construction and other provisions of these specifications which may affect thickness shall not be construed to modify such thickness requirements.

For the purpose of determining acceptability for thickness, cores shall be drilled by the Contractor at the locations specified by the Engineer. Cores shall have a minimum diameter of four inches. Length of cores will be determined in accordance with the requirements of AASHTO T-148 by measurements read to the nearest thousandth of an inch. The average of the measurements will be reported to the nearest hundredth of an inch.

In calculating average length, cores which have a length in excess of the thickness specified by more than 0.25 of an inch will be deemed to have a length of the specified thickness plus 0.25 of an inch. Field length measurements will be acceptable in lieu of average length measurement in accordance with the requirements of AASHTO T-148, provided the original core in any secondary unit meets or exceeds the specified thickness. Measurements in accordance with the requirements of AASHTO T-148 will be required on any questionable thickness measurements and on the three cores used to determine the average length for payment, regardless of length.

A primary unit of pavement shall be the area of pavement placed in each day's paving operation. Each intersection or special section shall be considered as a primary unit.

A secondary unit of pavement shall consist of 1,000 linear feet, or fraction thereof, of each traffic lane. Each 1,300 square yards of pavement in intersections, etc., shall be considered a secondary unit regardless of when the concrete was placed.

One core shall be drilled in each secondary unit. If the length of that core is not deficient by more than 0.25 of an inch, that secondary unit will be measured for payment at 100 percent. If the length of that core is deficient by more than 0.25 of an inch but less than 1.0 inch, two additional cores shall be drilled within that secondary unit and the length of the three cores averaged. If the average length is not deficient by more than 0.25 of an inch, that secondary

DRAFT

unit will be measured for payment at 100 percent. If the average length of the three cores is deficient by more than 0.25 of an inch, that secondary unit will be measured for payment in accordance with the requirements of Table 324-1.

If the core in the secondary unit is deficient by more than 1.00 inch, that core will not be used in determining the average thickness of that secondary unit. Additional cores shall be drilled at intervals not to exceed ten feet in each direction from the deficient core, parallel to the main-line centerline, until one core is obtained in each direction which is not deficient by more than 1.00 inch. The pavement between these two cores will be evaluated separately from the balance of the pavement in that secondary unit. The limits for evaluation shall be between the longitudinal weakened plane or construction joint on each side of the core and between the next transverse weakened plane, construction, or expansion joint beyond each of the last two cores. Unless the Engineer allows the pavement to remain, it shall be removed and replaced with pavement of the specified thickness and no payment will be made for the removed pavement. One additional core shall be drilled in the secondary unit to represent the quality of the concrete in that unit after deducting the limits of the deficient area if that pavement represented by the deficient area is allowed to remain. The core shall be measured for payment as hereinbefore specified.

If the pavement in the deficient area is removed, either by the order of the Engineer or at the option of the Contractor, it shall be removed between the limits of the evaluation. After the pavement has been replaced, one core shall be drilled at random in that secondary unit after deducting the area of the replaced pavement and one core shall be drilled in the new pavement. Pavement represented by the core drilled in the secondary unit, less the replaced pavement, will be measured for payment as hereinbefore specified. The core drilled in the replaced pavement shall be not less than the specified thickness; otherwise that pavement will not be measured or paid for.

At all locations where cores have been drilled, the resulting holes shall be filled with concrete in a manner satisfactory to the Engineer.

324.5 PROTECTION OF PAVEMENT:

The Contractor shall be responsible for taking adequate steps to protect concrete placed during rain, or hot or cold weather as defined in ACI Standards. Any concrete damaged by rain or extreme temperatures shall be removed and replaced at the Contractor's expense.

When ordered by the Engineer, pavement crossings shall be constructed for the convenience of public traffic. Where motor vehicles are encountered, a temporary bridge to span the newly placed concrete will be provided.

No traffic or Contractor's equipment, except as hereinafter provided, will be permitted on the pavement until the concrete has developed a compressive strength of 3500 psi.

Equipment for sawing joints will be permitted on the pavement when, in the Contractor's judgment, the concrete has developed sufficient strength to support the equipment without damage to the concrete. In case of visible cracking or other damage to the pavement, operation of the equipment on the pavement shall be immediately discontinued.

Any damage to the pavement resulting from early use of pavement by the Contractor's equipment shall be repaired by the Contractor at his expense.

324.6 METHOD OF MEASUREMENT:

Portland Cement Concrete Pavement will be measured by the square yard. Any opening in excess of one square yard will not be measured for payment.

324.7 BASIS OF PAYMENT:

The accepted quantities of Portland Cement Concrete Pavement, measured as provided for herein, will be paid for at the contract unit price complete in place, except that where the average length of cores indicates pavement deficient in thickness by more than 0.25 of an inch but not more than 1.00 inch, payment will be made as specified in Table 324-1. Payment will be made to the nearest cent.

DRAFT

No additional payment will be allowed for pavement constructed in excess of the thickness specified on the project plans.

TABLE 324-1	
PAVEMENT THICKNESS PAYMENT REDUCTION (PCCP)	
Core Thickness, Less Than Specified Thickness, Inches	Percent of Contract Unit Price Allowed
0.00 to 0.25	100
0.26 to 0.35	93
0.36 to 0.45	85
0.46 to 0.55	75
0.56 to 0.75	63
0.76 to 1.00	50

DRAFT

PORTLAND CEMENT CONCRETE PAVEMENT (PCCP)

324.1 DESCRIPTION:

This item shall consist of construction of a pavement composed of plain jointed portland cement concrete on a prepared subgrade. The Contractor shall furnish all labor, materials and equipment necessary for the construction of the pavement in accordance with these specifications and in reasonably close conformity to the lines, grades, thicknesses and details indicated by the plans or as established by the Engineer. All tests shall be performed by a laboratory approved by the Engineer.

324.2 MATERIALS:

324.2.1 Portland Cement Concrete: Portland cement concrete shall conform to the applicable requirements of MAG Standard Specifications Section 725 and the additional requirements of this section.

Concrete shall comply with Table 725-1 for Class AA, 4000 psi unless otherwise specified by the Engineer.~~develop a modulus of rupture of not less than 520 psi within 14 days after placement, and not less than 650 psi at 28 days' age as determined by tests of specimens fabricated in accordance with ASTM C 31 and tested in accordance with ASTM C 78 procedures. The Contractor shall submit data acceptable to the Engineer at least 30 days in advance of the start of concrete paving operations which demonstrate that concrete produced with materials and proportions as proposed for use in the construction will conform to the modulus of rupture requirements of these specifications. The data shall include results of compressive strength tests conducted at the same age as modulus of rupture tests to establish the correlation which can be expected between the flexural and compressive strength properties of the concrete. The Engineer may, at his option, use compressive strength tests of specimens fabricated in accordance with ASTM C 31 and tested in accordance with ASTM C 39 to verify conformance to the modulus of rupture requirements of these specifications.~~

The maximum concrete slump shall be as determined by the approved mix design in accordance with Section 725.9.(A)(1).

324.2.2 Concrete Materials: ~~Portland cement conforming to the requirements of ASTM C 150 for Type III, low-alkali, may be used at the Contractor's option. Aggregates shall be crushed rock or gravel conforming to the requirements of ASTM C 33. Coarse aggregate gradation shall conform to requirements for Size No. 57.~~ Fine aggregates shall have an average ~~s~~Sand ~~e~~Equivalent of not less than 75 when tested in accordance with the requirements of AASHTO T-176 or ASTM D-2419.

324.2.3 Reinforcement: Tie bars shall be deformed billet steel reinforcing bars conforming to the requirements of ASTM A-615, Grade 40.

Dowel or load transfer bars shall ~~be plain round bars~~ conform~~ing~~ to the requirements of ASTM A-615, Grade 40. ~~One-half the length of each dowel bar shall be painted with one coat of tar paint~~.

~~Metal sleeves of an approved design shall be provided for use with dowel bars. Sleeves shall cover 2 inches, plus or minus 1/4 inch, of the dowel, shall have a closed end with a suitable stop to hold the end at least 1 inch from the end of the bar, and shall be designed to prevent collapse during construction.~~ An approved ~~basket~~ support system shall be used to hold bars ~~parallel to pavement surface~~ in position.

324.2.4 Curing Materials: Materials for curing concrete shall conform to the requirements of Section 726.

324.2.5 Joint Materials: Joint sealant shall be ~~a one-component, hot~~ poured type, conforming to the requirements of ~~ASTM D 3406~~ Section 729.2 or as approved by the Engineer.

~~Back-up rod or tape and bond breakers provided to control the depth of sealant, achieve the desired shape factor, support sealant against indentation and sag, or to prevent bond of the sealant to the bottom concrete surface shall be compatible with the joint sealant material.~~ ~~**(Note: revised language added to Section 324.3.9.5.1)**~~

DRAFT

~~Other pour-type joint sealants conforming to the requirements of Subsection 729.2 may be used if approved by the Engineer.~~

Preformed expansion joint filler shall conform to the requirements ~~of ASTM D 1751~~ Section 729.1 or as approved by the Engineer.

324.3 CONSTRUCTION METHODS:

324.3.1 General: Pavement shall be constructed with mechanical equipment utilizing stationary side forms or by the use of slipform paving equipment without stationary side forms. Manual methods of placing and finishing concrete with stationary side forms may be permitted by the Engineer for areas inaccessible for mechanical equipment.

~~Curbs, or combined~~ All curb and gutter~~, shall be constructed along the edges of all pavement where shown in the plans and shall be formed to the cross section in accordance with the plans. Curbs may be constructed integrally with the pavement using a slipform or extrusion equipment or placed immediately after finishing operations by hand forming or using face forms. They may also be constructed as a separate operation after pavement construction using forms, slipform, or extrusion equipment. The edge of each gutter of the curb and gutter section built first may be used as a form in lieu of the setting of stationary side forms. Curbs, or curb and gutter, constructed as a separate operation shall otherwise conform to the requirements of Section 340.~~ Shall have the dame Class of concrete as the adjacent PCCP.~~All curbs and gutters~~ Gutter sections shall have the same thickness as the ~~main roadway~~ PCCP section. All curbs or combined curb and gutter joints shall ~~be~~ align~~ed~~ with roadway joints.

324.3.2 Equipment: Design, capacity, and mechanical condition of equipment and tools necessary for handling materials and performing all parts of the work shall be approved by the Engineer. Equipment shall be at the jobsite sufficiently ahead of the start of concrete paving operations to permit thorough examination and approval by the Engineer prior to start of concrete paving.

Equipment used to place concrete may consist of one or more machines, shall be capable of uniformly distributing and consolidating the concrete as it is placed without segregation and shall be capable of producing concrete pavement which will conform to the required cross-section with a minimum of hand work. The number and capacity of machines furnished shall be adequate to perform the work required at a rate equal to the concrete delivery rate.

Vibrators shall be used to consolidate concrete; the rate of vibration shall be not less than 3,500 cycles per minute for surface vibrators and not less than 8,000 cycles per minute for internal vibrators. Power to vibrators mounted on mechanical equipment shall be so connected that vibration ceases when forward or backward motion of the machine is stopped. Contractor shall furnish a tachometer or other suitable device for measuring and indicating the frequency of vibration.

Slipform pavers shall be equipped with high frequency internal vibrators mounted with axes either parallel or normal to pavement alignment for the full paving width. Vibrators mounted with axes parallel with pavement alignment shall be spaced at intervals not to exceed 24 inches, measured center-to-center. Vibrators mounted with axes normal to pavement alignment shall be spaced so that lateral clearance between individual vibrating units does not exceed 6 inches.

Slipform paving equipment which will be wholly or partially supported on subgrade shall be equipped with traveling side forms of sufficient dimensions, shape and strength to support the concrete at free edges laterally for a sufficient length of time during placement to produce pavement of the required cross-section, and shall be equipped and operate with automatic sensing and control devices such that the machine automatically senses deviations from the established guideline and performs the necessary corrective maneuvers to overcome variations from correct grade and alignment.

When concrete will be placed adjacent to existing pavement or curb and gutter, that part of the equipment supported on the existing pavement or curb and gutter shall be equipped with protective pads on crawler tracks or rubber-tired

DRAFT

wheels with bearing surfaces offset a sufficient distance from the edge of the pavement or curb and gutter to avoid edge damage, or the surface of the existing pavement or curb and gutter shall be otherwise protected against such damage in a manner approved by the Engineer.

324.3.3 Subgrade and Base Preparation: Subgrade and base shall conform to the applicable compaction requirements of section 601 and elevation tolerances specified for the material involved, shall be kept smooth and compacted, and shall be free of all loose and extraneous material when concrete is placed.

The surface of the subgrade shall be uniformly moist when concrete is placed. The surface of the subgrade shall be moistened immediately prior to placement of concrete if necessary to produce a uniformly moist condition. Any excess water standing in pools or flowing on the surface shall be removed prior to placing concrete.

~~Construction equipment shall not operate on the subgrade in the paving lane when conditions of the job will permit operation from outside the lane. When job conditions make it necessary to operate equipment on the subgrade in the paving lane, suitable runways or other precautions shall be taken to prevent rutting or displacement of subgrade material. The grade shall be checked and corrected immediately ahead of concrete placement and all disturbed grade shall be properly recompacted.~~**~~(Note: moved to 324.3.5)~~**

~~When concrete pavement will be placed with slipform paving equipment which will be supported and operate on the subgrade, the subgrade and slipform paver track area shall be brought to proper grade and cross section by means of a properly designed and operated machine.~~**~~(Note: moved to 324.3.6(a))~~**

324.3.4 Stationary Side Forms and Setting of Forms: Side form sections shall be straight, free from warps, bends, indentations or other defects. Side forms shall be of metal, have a base width of at least four inches and a minimum depth equal to the thickness of the pavement. No section shall show a variation from a true plane greater than 1/8 inch in ten feet on the top of the form or more than 1/4 inch in ten feet on the inside face. Flexible or curved forms of proper radius shall be used for curves of 100 feet radius or less. Suitable materials other than metal may be used to form end closures or at other locations where use of metal forms is not practical~~ when approved by the Engineer~~. Forms shall be thoroughly cleaned and oiled each time they are used.

Forms shall be of such cross-section and strength and so secured and supported on the subgrade as to resist the pressure of the concrete when placed and the impact and vibration of any equipment they are to support without springing or settlement. The method of connection between sections shall be such that the joints shall not move in any direction.

Subgrade under forms shall be compacted and cut to grade so that the form when set will be uniformly supported for its entire length at the specified elevation. Forms shall be so supported and secured during the entire operation of placing and finishing that they will not deviate vertically at any point more than 1/8 inch from the proper elevation. Forms shall be set to the required lines and grades well in advance and for a distance sufficient to prevent delay in placing concrete, and shall be approved by the Engineer prior to placing concrete. When any form has been disturbed or any grade has become unstable, the form shall be reset and rechecked.

Side forms shall remain in place until the day after placing concrete, and in all cases until the edge of the pavement no longer requires the protection of the forms. Forms shall be carefully removed in such a manner as to avoid damage to the pavement. Use of pry bars between the pavement and the forms will not be permitted.

324.3.5 Placing, Spreading and Compacting: Construction equipment shall not operate on the subgrade in the paving lane when conditions of the job will permit operation from outside the lane. When job conditions make it necessary to operate equipment on the subgrade in the paving lane, suitable runways or other precautions shall be taken to prevent rutting or displacement of subgrade material. The grade shall be checked and corrected immediately ahead of concrete placement and all disturbed grade shall be properly recompacted. Except when otherwise approved by the Engineer, concrete shall be deposited on the subgrade and spread full width using mechanical methods that result in minimal ~~a minimum of~~ handling and segregation. Necessary hand spreading shall be done with shovels, not rakes. Placement shall be continuous between transverse joints without the use of intermediate bulkheads.

DRAFT

The Contractor shall make adequate advance arrangements for preventing delay in delivery and placing of concrete. An interval of more than 15 minutes between placing of any two consecutive batches shall constitute cause for stopping operations, and Contractor shall remove all concrete placed beyond the last scheduled joint or install a ~~construction~~ joint ~~in the concrete already placed~~ **of the type** and at the location ~~and of the type~~ as directed by the Engineer.

Concrete shall be deposited as near to expansion and construction joints as possible without disturbing them but shall not be dumped onto a joint assembly. Concrete shall be thoroughly consolidated against and along the faces of all forms, adjacent pavement or curb and gutter, and on both sides of all joint assemblies. Vibrators shall not be permitted to come in contact with joint assemblies, the grade, or side forms, and shall not be operated longer than 15 seconds in any one location.

Manual methods of placing, spreading, and compacting may be used in the construction of pavement lanes of irregular width or widths less than 10 feet, and sections of intersections or other locations with complex variable surface configurations when permitted by the Engineer. Workmen shall not be allowed to walk in the freshly placed concrete ~~with boots or shoes coated with earth or other foreign substances~~.

324.3.6 Shaping and Initial Finishing: Concrete shall be struck off, consolidated, and float-finished with a slipform paver, mechanical finishing machine, vibrating screed, or by hand finishing methods when approved by the Engineer so that the complete pavement will conform to the thickness and cross ~~-~~section requirements of the plans and specifications. When the pavement being constructed is contiguous to existing parallel concrete pavement or curb and gutter, the elevation of the new pavement surface shall conform as closely as possible to the elevation of the existing pavement or gutter surface ~~and~~ in a manner which will~~–~~ prevent ponding**.** ~~**with t**~~**T**he difference in elevation **shall** not ~~to~~ exceed 1/4 inch.

Water shall not be applied to the pavement surface during screeding and finishing operations in excess of the amount lost by evaporation. Adding water to the surface of the concrete to assist in finishing operations shall not be permitted. When applications of water to the surface are required to prevent rapid evaporation of water from the surface during finishing operations, it shall be applied as a fog spray and with approved spray equipment.

324.3.6 (a) Slipform Supported on Subgrade Method: When concrete pavement will be placed with slipform paving equipment which will be supported and operate on the subgrade, the subgrade and slipform paver track area shall be brought to proper grade and cross section by means of a properly designed and operated machine. The equipment shall spread, consolidate, screed and float-finish the concrete in one complete pass of the machine. The machine shall be operated with as nearly a continuous forward movement as possible and all paving operations shall be so coordinated as to provide uniform progress with stopping and starting of the paver held to a minimum. Sliding side forms shall be rigidly held together to prevent spreading. Any edge slump of the pavement, exclusive of edge rounding, in excess of 1/4 inch shall be corrected.

No abrupt changes in longitudinal alignment of the pavement will be permitted. The horizontal deviation shall not exceed 1 inch from the alignment established by the Engineer.

While concrete is being spread, compacted and shaped, vibrating units shall be operated within fresh concrete so that the longitudinal axis, at the center of each unit, is not more than 6 inches above the top of the subgrade. Amplitude of vibration shall be sufficient to be perceptible on the surface of concrete along the entire length of vibrating units and for a distance of at least one foot ~~there from~~.

324.3.6 (b) Mechanical Equipment Supported on Fixed Form Method: When concrete is spread without the use of internal vibration, the finishing machine shall be equipped with vibrating equipment that will internally vibrate the concrete for the full paving width and with not less than two oscillating or reciprocating screeds. Concrete shall be struck off and consolidated so that the surface will conform to the finished grade and cross ~~-~~section shown on the project plans and with sufficient material on the surface for floating operations.

DRAFT

After the concrete has been struck off and consolidated, it shall be floated with a longitudinal float of a type approved by the Engineer.

A slipform paver or a single machine which will effectively spread, consolidate, screed, and float in one operation may be used in lieu of separate finishing and floating equipment.

324.3.6 (C) Manual Methods with Fixed Forms: Concrete shall be deposited, spread and struck off to such an elevation that, when properly consolidated, the surface will conform to the required lines and grades. Concrete shall be consolidated by internal vibration as it is struck off with a screed. A slight excess of concrete shall be kept in front of the screed at all times during the strike-off operation.

After consolidation and screeding, concrete shall be tamped to the proper surface elevation and cross-section using either a heavy plank with a length in excess of the width of pavement being placed by one foot or more, or with a mechanical vibrating unit spanning the full width between forms. The tamping plank, if used, shall be stiffened as necessary to prevent sag and shall have the lower tamping edge shod with metal. The tamping plank shall be moved forward with a combined vertical tamping and longitudinal screeding motion so that the concrete will be thoroughly consolidated and the surface screeded to the required elevation. A small surplus of concrete shall be kept in front of the tamper or vibrating unit. Tamping or vibrating shall continue until the specified cross-section is obtained and the mortar flushed slightly to the surface. On grades in excess of 5 percent a second strike board shall follow from 25 to 50 feet behind the tamper or vibrating unit and shall be used in the same manner to remove waves caused by the flow of concrete behind the first strike board.

Other mMethods other than the tamping plank may be utilized for screeding when approved by the Engineer.

Pavement shall be finished smooth and true to grade with suitable manually operated floats or powered finishing equipment.

324.3.7 Final Finishing: After the pavement has been float-finished, it shall be scraped with a 10-foot long straightedge equipped with a handle to permit operations from the edge of the pavement, and excess water and laitance shall be removed from the surface. The straightedge shall be operated parallel to the centerline of the pavement and shall be moved forward one-half length after each pass. Irregularities shall be corrected by adding or removing concrete, and disturbed places shall be again straight-edged.

Long-handled wood floats shall be used only in areas not accessible to finishing equipment and in emergencies, and use of such floats shall be confined to a minimum.

The addition of water to the surface of the concrete to assist in finishing operations shall not be permitted unless approved by the Engineer. When the evaporation rate on the concrete surface exceeds the rate of bleeding of the concrete, measures shall be taken When addition of water to the surface is permitted to prevent the rapid evaporation of water from the surface during finishing operations., When allowed by the Engineer, the addition of water to the surface may be permitted when applied as a fog spray with approved spray equipment immediately after screeding and/or between finishing operations. A commercial evaporation reducer that forms a monomolecular film may also be sprayed onto the concrete surface in accordance with the Manufacturer's recommendations. When either of these methods is approved and used it does not take the place of proper curing methods per Section 3.8.

Pavement edges and joints shall be edged in accordance with details shown on the project plans or as directed by the Engineer.

In advance of curing operations, pavement shall be given a texturedding. Texturing shall be performed with an artificial turf drag with a board added to assure the weight needed to obtain an approved surface. Artificial turf shall be a molded composite structure with polyethylene face, nylon and polyester backing, a pile height of 0.85 inches, and total weight of 75 oz./sq. yd. The approved surface obtained during initial surface texturing shall be subject to approval will be made by the Engineer. The texturing approved on the initial construction and shall not be changed without the Engineer's approval. Each time the construction is stopped or causes the texturing to stop, the artificial turf must be shaken clean before continuing.

324.3.8 Curing: Curing shall begin immediately following surface texturing and edging. Before concrete placement begins Contractor shall have at hand and ready to install ~~before concrete placement begins~~ the materials and equipment needed for adequate curing.

After finishing operations have been completed, the newly placed concrete shall be cured by moist curing methods, by application of a white pigmented liquid membrane compound conforming to the requirements of Section 726, or by a combination of these methods. All surfaces not covered by reasonably waterproof forms shall be kept damp by applying water with a nozzle that so atomizes the flow of water that a fog mist and not a spray is formed until the surface is covered with liquid membrane compound, the surface has hardened sufficiently to permit sprinkling of the surface, or moist curing by covering with wet burlap or other approved materials can be initiated. Moisture from the nozzle shall not be applied under pressure directly upon the concrete and shall not be allowed to accumulate on the concrete in a quantity sufficient to cause a flow and erode the surface. Moist curing shall be continued until liquid membrane curing compound or other type of curing membrane is applied.

Membrane curing compound shall be applied to all pavement by automatic mechanical method from a construction bridge.

The edges of concrete slabs exposed by the removal of forms shall be protected immediately to provide these exposed surfaces with continuous curing treatment equal to the method selected for curing the pavement surface.

The membrane method of curing may be applied behind the final finishing operation after all free water has disappeared from the surface. Complete and uniform coverage at the rate of one gallon per 100 square feet, or as otherwise recommended by the manufacturer, shall be required. Compound shall be kept agitated to prevent pigment from settling.

324.3.9 Joints:

324.3.9.1 General: Joints shall be provided in the pavement of the type, dimensions and at the locations as indicated in the plans or as specified herein.

Joints in concrete pavement will be designated as transverse expansion joints, longitudinal or transverse construction joints, longitudinal or transverse weakened plane joints, or isolation joints. The faces of all joints shall be perpendicular to the pavement surface. Joints shall be constructed in accordance with the details shown or referenced in the plans and in accordance with the following provisions.

At all times prior to acceptance of the construction, joints shall be maintained clean and free of all soil, gravel, and other foreign material except approved types of joint filler materials.

324.3.9.2 Longitudinal Joints: Longitudinal joints shall be weakened plane or construction joints. Longitudinal weakened plane joints shall be constructed by sawing or by insertion of a parting strip in the plastic concrete to be left in place. Longitudinal construction joints shall be constructed with tie bars or keyways as indicated in the plans.

324.3.9.3 Transverse Joints: Transverse joints shall be weakened plane, construction or expansion joints. All transverse weakened plane joints will be constructed by sawing and in accordance with the details shown in the project plans. Transverse construction joints shall be constructed ~~with dowels or with sawed keyways and~~ in accordance with the details shown or referenced in the project plans. Transverse expansion joints shall be constructed ~~as butt joints with vertical expansion joint filler and with or without dowel bars~~ in accordance with the details shown or referenced in the project plans.

Dowel bars when required shall be supported with an approved support system~~on a basket type system with a base plate on subgrade and up the side form to prevent material from entering dowel openings~~.

324.3.9.4 Joint Location: Longitudinal and transverse joints shall be constructed ~~between traffic lanes and~~ at ~~other~~ locations as indicated in the project plans.

~~Transverse construction joints shall be constructed at the end of a day's production or when placing of concrete is discontinued for more than 45 minutes. Transverse construction joints will not be allowed within 500 feet of a structure unless otherwise approved by the Engineer.~~

~~Transverse weakened plane joints in concrete placed in lanes adjacent to previously placed concrete shall be located to align with weakened plane joints in the adjacent lanes. No transverse weakened plane joint shall be constructed within 6 feet of another transverse joint. When the planned spacing of transverse weakened plane joints results in location of a weakened plane joint within 6 feet of another transverse joint, the transverse weakened plane joint shall be relocated so it is not within 6 feet of said transverse joint.~~

~~Transverse expansion joints shall be located at the junction of the normal roadway pavement slab with bridge approach slabs and at other locations as shown on the plans.~~**~~(Note – this will be handled by the project plans)~~**

Isolation joints shall be provided around manholes, catch basins, or other elements which extend into or project through the pavement and act as point of restraint to horizontal or vertical movement of the pavement. Isolation joints shall be located in accordance with Detail 224 or as directed by the Engineer.

324.3.9.5 Construction of Joints:

324.3.9.5.1 Sawed Joints: Sawed joints shall be constructed by cutting a groove in the pavement using a single or multiple-blade power saw. The groove shall be cut to the dimensions shown on the project plans. Suitable guidelines or devices shall be used to ~~assure~~ensure joints are cut true to the lines as shown on the project plans.

If joints are sawed in stages, the initial saw cut shall be of the minimum width specified and sawed to the required depth~~ shown on the project plans~~. The depth of the initial saw cut in the construction of weakened plane joints shall be a minimum of 1/4 of slab thickness.

Sawing of weakened plane joints shall be done before uncontrolled cracking takes place, and after the concrete has hardened to the extent that tearing or raveling of the edges of the saw cut is not excessive. The exact time for all sawing shall be determined by the Contractor when not otherwise specified~~ herein~~.

Any procedure for sawing joints that result~~s~~ in premature, uncontrolled cracking shall be revised immediately. The Contractor shall be responsible for replacing or repairing areas containing uncontrolled cracking and for repairing spalled or chipped concrete along the edges of sawed joints ~~as directed and~~ to the satisfaction of the Engineer.

After saw cutting of the joint and just prior to sealing the joint, the internal joint surfaces shall be cleaned of all dirt, curing ~~and~~ compound residue, laitance and other foreign materials. The internal joint surface shall be defined as the sawed portion of the joint and the resultant crack for the full depth of the pavement.

Sealing of sawed joints where required shall be completed prior to the opening of the pavement to traffic unless otherwise approved by the Engineer. When delayed sealing of sawed joints is permitted, saw cuts and formed recess to be filled with sealant shall be protected to ensure thorough curing of the concrete along the edges of the joint recesses and to prevent entry of foreign materials into the joint. At the Contractor's option, inert compressible joint filler material such as plastic backer rod or upholstery cord may be inserted into joints immediately after sawing or forming of the joint recess to provide curing protection and prevent entry of foreign material. If absorptive filler material is used, it shall be thoroughly moistened either before or immediately after installation in the sawed groove. When filler material is rope, or similar material which does not fill the entire depth of sawed groove, it shall be depressed not less than ½ inch below the pavement surface before the pavement is opened to traffic.

324.3.9.5.2 Expansion and Construction Joints: Longitudinal and transverse expansion and construction joints shall be as required by the project plans~~of the type and formed in accordance with the details shown on Detail 224 or as directed by the Engineer~~.

324.3.9.5.3 ~~Expansion and~~ Isolation Joints: ~~Transverse expansion and i~~Isolation joints **unless otherwise detailed in construction documents** shall be 1/2 inch wide expansion joints ~~formed~~ in accordance with~~ the details shown on~~ Detail 224 or as directed by the Engineer.

DRAFT

324.3.9.5.4 Sealing of Joints: ~~Sealing of sawed joints where required shall be completed prior to the opening of the pavement to traffic unless otherwise approved by the Engineer. When delayed sealing of sawed joints is permitted, saw cuts and formed recess to be filled with sealant shall be protected to ensure thorough curing of the concrete along the edges of the joint recesses and to prevent entry of foreign materials into the joint. At the Contractor's option, inert compressible joint filler material such as plastic backer rod or upholstery cord may be inserted into joints immediately after sawing or forming of the joint recess to provide curing protection and prevent entry of foreign material. If absorptive filler material is used, it shall be thoroughly moistened either before or immediately after installation in the sawed groove. When filler material is rope, or similar material which does not fill the entire depth of sawed groove, it shall be depressed not less than ½ inch below the pavement surface before the pavement is opened to traffic.~~

Sealant shall be applied in accordance with the sealant manufacturer's recommendations. A primer shall be furnished and applied after the joint has been cleaned and prepared to receive sealant ~~if so~~ when indicated in the manufacturer's recommendations.

Prior to the application of the sealant, an approved type of inert, compressible joint filler material such as plastic backer rod or upholstery cord, or an approved type of bond breaker, shall be inserted along the joint in accordance with the details shown on the project plans. The joint shall then be filled with sealant to a level not less than 1/8 inch or more than 1/4 inch below the elevation of the pavement surface adjacent to the joint edge.

The equipment used to apply sealant shall be as recommended by the sealant manufacturer. Sealant shall not be spilled on the surface of the concrete pavement, and Contractor shall remove any sealant inadvertently spilled on the pavement surface.

324.3.9.5.5 Repair of Cracks, Spalls, Raveling and Tearing: Contractor shall be responsible for replacing or repairing all areas of pavement containing uncontrolled cracking, surface spalls, or other types of surface ~~defects as directed by the Engineer~~. Repairs when authorized shall be made and completed by methods acceptable to the Engineer ~~and the repair shall be completed to the satisfaction of the Engineer~~.

324.4 Tests of Finished Pavement:

324.4.1 Smoothness: ~~The pavement Surface Profile Index shall not exceed seven inches per mile in any 0.1 of a mile section or any remaining portion thereof as measured along any line parallel to the edge of the pavement except at and through intersections, and at and through railroad crossings. The surface profiles will be evaluated in accordance with the requirements of Arizona Department of Transportation Test Method 801.~~

~~After completion of all paving, the Contractor shall clean the pavement by brooming or any other method to allow the Engineer to obtain accurate profilograph readings. Profilograph readings will be taken one time in each wheel path of each lane.~~

~~Grinding will be required if necessary to produce a surface smoothness conforming to the requirements of this section. In addition, all high areas having deviations in excess of 0.3 of an inch shall be ground. After grinding, the finished surface of the ground area shall be provided with a uniform texture acceptable to the Engineer. The method of texturing shall be approved by the Engineer.~~

~~In addition to the Surface Profile Index requirement, t~~The pavement surface including pavement in intersections will be tested with a ten-foot straight-edge placed parallel to the centerline of the pavement in each lane. Ordinates measured from the face of the straight-edge to pavement surface shall at no place exceed one-quarter inch. Areas that do not meet the required surface accuracy as determined by straight-edge testing shall be marked, and Contractor shall at his own expense and as required by the Engineer either:

(1) Grind down areas higher than 1/4 inch but not more than 1/2~~½~~ inch above the correct surface.

(2) Correct areas lower than 1/4 inch but not lower than 1/2~~½~~ inch below the correct surface by grinding down the adjacent areas.

DRAFT

(3) ~~Break out~~ Remove and replace pavement when the deviation exceeds 1/2~~½~~ inch from the correct surface. Area replaced shall be of a length, width and depth as required to allow formation of a new slab of the required quality. The area replaced shall be compatible with the joint layout shown on the project plans as determined by the Engineer.

After grinding, the finished surface of the ground area shall be provided with a uniform texture acceptable to the Engineer. The method of texturing shall be approved by the Engineer.

324.4.2 Pavement Thickness: Concrete pavement shall be constructed in accordance with the thickness requirements of the plans and specifications. Tolerances for base and subgrade construction and other provisions of these specifications which may affect thickness shall not be construed to modify such thickness requirements.

For the purpose of determining acceptability for thickness, cores shall be drilled by the Contractor at the locations specified by the Engineer. Cores shall have a minimum diameter of four inches. Length of cores will be determined in accordance with the requirements of AASHTO T-~~-~~148 by measurements read to the nearest thousandth of an inch. The average of the measurements will be reported to the nearest hundredth of an inch.

In calculating average length, cores which have a length in excess of the thickness specified by more than 0.25 of an inch will be deemed to have a length of the specified thickness plus 0.25 of an inch. Field length measurements will be acceptable in lieu of average length measurement in accordance with the requirements of AASHTO T-148, provided the original core in any secondary unit meets or exceeds the specified thickness. Measurements in accordance with the requirements of AASHTO T-148 will be required on any questionable thickness measurements and on the three cores used to determine the average length for payment, regardless of length.

A primary unit of pavement shall be the area of pavement placed in each day's paving operation. Each intersection or special section shall be considered as a primary unit.

A secondary unit of pavement shall consist of 1,000 linear feet, or fraction thereof, of each traffic lane. Each 1,300 square yards of pavement in intersections, etc., shall be considered a secondary unit regardless of when the concrete was placed.

One core shall be drilled in each secondary unit. If the length of that core is not deficient by more than 0.25 of an inch, that secondary unit will be measured for payment at 100 percent. If the length of that core is deficient by more than 0.25 of an inch but less than 1.0 inch, two additional cores shall be drilled within that secondary unit and the length of the three cores averaged. If the average length is not deficient by more than 0.25 of an inch, that secondary unit will be measured for payment at 100 percent. If the average length of the three cores is deficient by more than 0.25 of an inch, that secondary unit will be measured for payment in accordance with the requirements of Table 324-1.

If the core in the secondary unit is deficient by more than 1.00 inch, that core will not be used in determining the average thickness of that secondary unit. Additional cores shall be drilled at intervals not to exceed ten feet in each direction from the deficient core, parallel to the main-line centerline, until one core is obtained in each direction which is not deficient by more than 1.00 inch. The pavement between these two cores will be evaluated separately from the balance of the pavement in that secondary unit. The limits for evaluation shall be between the longitudinal weakened plane or construction joint on each side of the core and between the next transverse weakened plane, construction, or expansion joint beyond each of the last two cores. Unless the Engineer allows the pavement to remain, it shall be removed and replaced with pavement of the specified thickness and no payment will be made for the removed~~al~~ pavement. One additional core shall be drilled in the secondary unit to represent the quality of the concrete in that unit after deducting the limits of the deficient area if that pavement represented by the deficient area is allowed to remain. The core shall be measured for payment as hereinbefore specified.

If the pavement in the deficient area is removed, either by the order of the Engineer or at the option of the Contractor, it shall be removed between the limits of the evaluation. After the pavement has been replaced, one core shall be drilled at random in that secondary unit after deducting the area of the replaced pavement and one core shall be drilled in the new pavement. Pavement represented by the core drilled in the secondary unit, less the replaced

DRAFT

pavement, will be measured for payment as hereinbefore specified. The core drilled in the replaced pavement shall be not less than the specified thickness~~,~~; otherwise that pavement will not be measured or paid for.

At all locations where cores have been drilled, the resulting holes shall be filled with concrete in a manner satisfactory to the Engineer.

324.5 PROTECTION OF PAVEMENT:

The Contractor shall be responsible for taking adequate steps to protect concrete placed during rain, or hot or cold weather as defined in ACI Standards. Any concrete damaged by rain or extreme temperatures shall be removed and replaced at the Contractor's expense.

When ordered by the Engineer, pavement crossings shall be constructed for the convenience of public traffic. Where motor vehicles are encountered, a temporary bridge to span the newly placed concrete will be provided.

No traffic or Contractor's equipment, except as hereinafter provided, will be permitted on the pavement until the concrete has developed a compressive strength of 3500 psi.

Equipment for sawing joints will be permitted on the pavement when, in the Contractor's judgment, the concrete has developed sufficient strength to support the equipment without damage to the concrete. In case of visible cracking or other damage to the pavement, operation of the equipment on the pavement shall be immediately discontinued.

Any damage to the pavement resulting from early use of pavement by the Contractor's equipment shall be repaired by the Contractor at his expense.

324.6 METHOD OF MEASUREMENT:

Portland ~~c~~Cement ~~c~~Concrete ~~p~~Pavement will be measured by the square yard. Any opening in excess of one square yard will not be measured for payment.

324.7 BASIS OF PAYMENT:

The accepted quantities of ~~p~~Portland ~~c~~Cement ~~c~~Concrete ~~p~~Pavement, measured as provided for herein, will be paid for at the contract unit price complete in place, except that where the average length of cores indicates pavement deficient in thickness by more than 0.25 of an inch but not more than 1.00 inch, payment will be made as specified in Table 324-1. Payment will be made to the nearest cent.

No additional payment will be allowed for pavement constructed in excess of the thickness specified on the project plans.

TABLE 324-1

PAVEMENT THICKNESS PAYMENT REDUCTION (~~AC~~PCCP)

Core Thickness, Less Than Specified Thickness, Inches	Percent of Contract Unit Price Allowed
0.00 to 0.25	100
0.26 to 0.35	93
0.36 to 0.45	85
0.46 to 0.55	75
0.56 to 0.75	63

DRAFT

0.76 to 1.00	50

DRAFT

Rev 6/30/214

Case 14-10 Warm mix asphalt

This case is to allow the use of “warm mix” asphalt in local agency or MAG projects. This requires some additional language to section 321 and 710 to allow for lower production temperatures and changes to require reporting of the use of this technology.

The case includes language allowing ADOT to maintain the approved list of technologies. It also shows requirements delineating what are to be included in the mix design.

SECTION 321

PLACEMENT AND CONSTRUCTION OF ASPHALT CONCRETE PAVEMENT

321.1 DESCRIPTION:

This section is to provide specifications for furnishing all materials, mixing at a plant, hauling and placing a mixture of aggregate materials, mineral admixture and asphalt binder to form a pavement course for placement upon a previously prepared base or sub base.

321.2 MATERIALS AND MANUFACTURE:

The materials shall conform to Section 710 for the type specified. ~~The specific required mix type shall be called out in the contract documents or as directed by the Engineer.~~ Warm Mix Asphalt (WMA) technologies may be used within the mixture ~~at the option of the contractor~~ provided all requirements of the specifications are met, and the technology is on the ADOT Approved Product list. The specific required mix type shall be called out in the contract documents or as directed by the Engineer.

321.3 WEATHER AND MOISTURE CONDITIONS:

Asphalt concrete shall be placed only when the surface is dry, and when the atmospheric temperature in the shade is 40 degrees F. (50 degrees F for Asphalt Concrete lift less than 2 inch thick) or above. No asphalt concrete shall be placed when the weather is foggy or rainy, or when the base or sub base on which the material is to be placed is unstable. Asphalt concrete shall be placed only when the Engineer determines that weather conditions are suitable.

321.4 APPLICATION OF TACK COAT:

A tack coat shall be applied to all existing and to each new course of asphalt concrete prior to the placing of a succeeding lift of asphalt concrete. The tack coat may be deleted when a succeeding layer of asphalt concrete is being applied over a freshly laid course that has been subjected to very little traffic when approved by the Engineer.

The application of the tack coat shall comply with Section 329. The grade of emulsified asphalt shall be SS-1 h or CSS-1 h as specified in Section 713.

The same material that is specified above for the tack coat shall be applied to the vertical surfaces of existing pavements, curbs, and gutters, against which asphalt concrete is to be placed.

The surface to be covered may require repair or patching as directed by the Engineer. This shall be addressed in the project specifications prior to the bidding of the project.

321.5 MIX DESIGN

The mix design shall be submitted to the Engineer at least five working days prior to the start of asphalt concrete production. Mix designs provided by the agency may be utilized on projects at the Engineer's discretion. The Engineer will review and approve the mix design to assure it contains all of the required information as outlined in Section 710.3.1. If WMA technologies are used within the mix design, the type of WMA technology used ~~wi~~shall be indicated on the mix design. The target values for gradations, binder contents, and air voids will be established as the accepted Job Mix Formula (JMF) based upon the mix design. Mix designs not containing all of the information will be returned within five working days of receipt of all mix design information, for action and resubmission by the contractor.

Once the mix design has been approved by the agency and the mixing plant selected, the Contractor and/or his supplier shall not change plants nor utilize additional mixing plants without prior approval of the Engineer.

If the contractor elects to change its source of material, the contractor shall furnish the Engineer with a new mix design, which meets the requirements of Section 710, as amended by the Project Specifications.

The contractor may make self-directed target changes to the approved mix design within the limits shown below.

Requests for self-directed target changes shall be made in writing and acknowledged by the Engineer prior to the start of production of a lot and will remain in effect until such time as any additional changes are implemented. The self-directed target changes must meet the contract requirements for mix design criteria and gradation limits.

TABLE 321-1 ALLOWABLE SELF-DIRECTED TARGET CHANGES	
MEASURED CHARACTERISTICS	ALLOWABLE SELF-DIRECTED TARGET CHANGES
Gradation (Sieve Size)	
3/8 inch	± 4% from mix design target value
No 8	± 4% from mix design target value
No 40	± 2% from mix design target value
No 200	+0.5% from mix design target value
Binder Content	± 0.2% from mix design target value
Effective Air Voids	None

The contractor may propose target changes, other than self-directed changes, to the approved mix design for the approval of the Engineer. The Engineer will determine if the proposed target change will result in mix production that meets the contract requirements for mix design criteria and gradation limits. The target changes will not be retroactive for the purpose of acceptance.

321.6 MIX PRODUCTION:

All materials shall be proportioned by weight in a hot mix asphalt plant in the proportions required by the mix design to provide a homogeneous and workable mass. Each hot mix asphalt plant shall be inspected in accordance with the provisions contained in the 'Hot Mix Asphalt Production Facilities' by the Arizona Rock Products Association and shall have a current inspection certificate. All measuring devices shall be calibrated at least annually by a technician licensed by the Arizona Bureau of Weights & Measures. Mixing plants shall conform to the requirements of AASHTO M-156, except as modified herein. If WMA technology is being used, any equipment associated with the production of hot mix asphalt shall be calibrated and in proper working order according to the WMA equipment specifications. If there are any deviations in the production or compacting temperatures of the hot mix asphalt with WMA technology, the mix design shall state the differences.

In drum mix plants the mineral admixture shall be added and thoroughly mixed with the mineral aggregate by means of a mechanical mixing device prior to the mineral aggregate and mineral admixture entering the dryer. The moisture content of the combined mineral aggregate shall be a minimum of three percent by weight of the aggregate during the mixing process.

For drum-mix plants, the mineral admixture shall be weighed across a weight belt, or other approved alternative weighing system, with a weight totalizer prior to entry into the mechanical mixing device. The mechanical mixing device shall be a pugmill type mixer that is in good working condition. The rate of the aggregate feed shall not exceed the mixing device's capacity in ton per hour. The mixer shall be constructed to minimize the loss of mineral admixture and shall be located in the aggregate delivery system at a location where the mixed material can be readily inspected. The mixing device shall be capable of effective mixing in the full range of the asphalt concrete production rates.

The hot plant and equipment shall be constructed and operated to prevent loss of mineral admixture through the dust collection system of the plant.

A positive signal system shall be provided and utilized during production whereby the mixing shall automatically be stopped if the mineral admixture is not introduced into the mineral aggregate. The plant will not be permitted to operate unless the signal system is in good working condition.

The introduction of bituminous material shall be controlled by an automated system fully integrated with the controls or the mineral aggregate and mineral admixture. The production of the plant shall be controlled by the rate required to obtain a uniform mixture of all components. Drying and heating shall be accomplished in such a manner as to preclude the mineral admixture from becoming coated with un-spent fuel. The completed asphalt concrete may be held in storage for up to 12 hours in insulated or heated silos, providing the minimum temperature noted herein for placement and compaction is met behind the placement device. If the Engineer determines that there is an excessive amount of heat, heat loss, drain down, segregation and/or oxidation of the mixture due to temporary storage, use of surge bins or storage bins will be discontinued.

The temperature of the asphalt concrete, with unmodified binders, upon discharge from the mixer shall not exceed 335 degrees F. The discharge temperature may be increased on the recommendation of the binder supplier, when approved by the Engineer. If the asphalt concrete is discharged from the mixer into a hopper, the hopper shall be constructed so that segregation of the asphalt concrete will be minimized.

321.7 TRANSPORTATION:

Petroleum distillates or other substances that will have a detrimental effect on the asphalt concrete shall not be used as a release agent.

The beds of all transportation units shall be clean and smooth to allow the free flow of material into the paving machine's hopper.

Tarpaulins shall be furnished on all trucks and used when weather condition warrant, or if directed by the Engineer.

321.8 PLACEMENT:

321.8.1 Placing: All courses of asphalt concrete shall be placed and finished by means of a self-propelled paving machine equipped with an automatically actuated control system, except under certain conditions or at locations where the Engineer deems the use of a self-propelled paving machine impracticable.

The control system shall control the elevation of the screed at each end by controlling the elevation of one end directly and the other end indirectly either through controlling the transverse slope or alternatively when directed, by controlling the elevation of each end independently.

The control system shall be capable of working with one of the following devices:

(a) Ski or non-contact device of not less than 30 feet in length, supported throughout its entire length
(b) Taut stringline or wire set to grade
(c) Short ski or sonar sensing units from curb control
(d) Joint matching shoe

Failure of the control system to function properly shall be cause for the suspension of asphalt concrete production. In order to achieve a continuous operation, the speed of the paving machine shall be coordinated with the hot mix plant and transport units.

If the asphalt concrete is dumped from the hauling vehicles directly into the paving machine, care shall be taken to avoid jarring the machine or moving it out of alignment. No vertical load shall be exerted on the paving machine by the truck.

If asphalt concrete is dumped upon the surface being paved and subsequently loaded in the paving machine, the loading equipment shall be self-supporting and shall not exert any vertical load on the paving machine. Substantially all of the asphalt concrete shall be picked up and loaded into the paving machine.

Self-propelled paving machines shall spread the mixture without segregation or tearing, true to line, grade and crown indicated on the Project plans. Pavers shall be equipped with hoppers and augers that will distribute the mixture uniformly in front of an adjustable floating screed. The raising of the hopper wings must be minimized and

the paving machine will not be operated when in an empty condition.

Screeds shall include any strike-off device operated by tamping or vibrating action which is effective, without tearing, shoving or gouging the mixture and which produces a course with a uniform texture and density for the full width being paved. Screeds shall be adjustable as to height and crown and shall be equipped with a controlled heating device for use when required. In the case of the screed, auger extensions and vibrators shall be installed wherever the screed is extended more than one (1) foot beyond the end of the base auger or auger extension. However, when placing material against an extremely uneven curb or edge over a short distance, the Engineer may waive the auger extensions and vibrators.

At any place not accessible to the roller, the mixture shall be thoroughly compacted with tampers to provide a uniform and smooth layer over the entire area compacted in this manner.

321.8.2 Joints: Transverse joints, before a surface course is placed in contact with a cold transverse construction joint, the cold existing asphalt concrete shall be trimmed to a vertical face for its full depth and exposing a fresh face. After placement and finishing the new asphalt concrete, both sides of the joint shall be dense and the joint shall be smooth and tight. The surface in the area of the joint shall not deviate more than 1/4 inch from a 12-foot straightedge, when tested with the straightedge placed across the joint, parallel to the centerline. Longitudinal Joints of each course shall be staggered a minimum of 6 inches with relation to the longitudinal joint of the immediate underlying course cold transverse construction joint, the cold existing asphalt concrete shall be trimmed to a vertical face for its full depth and exposing a fresh face. The fresh face shall be tacked prior to placement of the adjacent course. After placement and finishing the new asphalt concrete, both sides of the joint shall be dense and the joint shall be smooth and tight. The surface in the area of the joint shall not deviate more than ¼ inch from a 12-foot straightedge, when tested with the straightedge placed across the joint, parallel to the centerline. The joint will be tack coated if required by the Engineer.

321.8.3 Asphalt Leveling Course: A leveling course shall be used when specified, or as directed in writing by the Engineer, to bring existing pavement to a uniform grade prior to placing an overlay or other course. If a leveling course is being applied on an Asphalt surface, a tack coat shall be applied. The compaction requirements contained in Section 321.10 do not apply to leveling courses.

321.8.4 Compaction; Asphalt Base Course and Surface Course: It is the contractor's responsibility to perform any desired Quality Control monitoring and/or testing during compaction operations to achieve the required compaction. The temperature of the asphalt concrete immediately behind the laydown machine shall meet the minimum requirements of Table 321-2, unless WMA technology is being used. If WMA technology is being used then the minimum requirements will be stated within the mix design recommended by the WMA manufacturer. A probe type electronic thermometer with a current calibration sticker attached will be used to measure the temperature of the asphalt concrete mixture. When measuring the temperature of the mat, the probe shall be inserted at mid-depth and as horizontal as possible to the mat.

TABLE 321-2

MINIMUM ASPHALT CONCRETE PLACEMENT TEMPERATURE

Base [(1)] Temp (°F)	Mat Thickness (inches)					
	1/2	3/4	1	1 1/2	2	3 and greater
40 – 50	---	---	310	300	285	275
50 – 60	---	310	300	295	280	270
60 – 70	310	300	290	285	275	265
70 – 80	300	290	285	280	270	265
80 – 90	290	280	270	270	265	260
+90	280	275	265	265	260	255

(1) Base on which mix is to be placed

Asphalt compaction equipment shall be of sufficient size and weight to accomplish the required compaction. All compaction equipment shall be operated and maintained in accordance with the manufacturer's recommendations

and the project requirements. During the rolling operation, the speed of the roller shall not exceed 3 miles per hour, unless otherwise approved by the Engineer.

Pneumatic tired compactors shall be equipped with skirt-type devices mounted around the tires so that the temperature of the tires will be maintained during the compaction process.

The Engineer will determine the acceptability of the pavement compaction in accordance with Section 321.10.

321.8.5 Smoothness: The completed surfacing shall be thoroughly compacted, smooth and true to grade and cross-section and free from ruts, humps, depressions or irregularities. An acceptable surface shall not vary more than one-fourth (¼) inch from the lower edge of a 12-foot straightedge when the straightedge is placed parallel to the centerline of the roadway.

321.8.6 Asphalt Concrete Overlay: Asphalt concrete overlay consists of the placing and compacting plant mix asphalt concrete over existing pavement. The mix design and thickness of the overlay shall be as shown on the plans or as specified in the special provisions.

Except when the existing asphalt surface is to be preheated and remixed, pavement surfaces shall be prepared as follows:

(a) Areas designated for pavement repair by the contract documents (which may include severely raveled areas, severely cracked areas, over-asphalted areas, and other defects) shall be cut out and replaced. Pavement repairs shall be completed and approved before placing asphalt concrete overlay.

(b) Before placing asphalt concrete overlay, milling shall be done as shown on the plans or specified in the special provisions and shall be in accordance with Section 317.

(c) After pavement repairs and milling have been completed the entire surface shall be cleaned with a power broom.

(d) After surfaces have been prepared to the satisfaction of the Engineer, they shall receive a tack coat per Section 321.4. Traffic will not be permitted to travel over surfaces which have received a tack coat, except when tack coat is applied to milled surfaces in compliance with Section 317.2 for dust control purposes. When the overlay is to extend onto a concrete gutter, the gutter shall be thoroughly cleaned of loose dust and cement particles and shall be tack coated.

Asphalt concrete overlay shall be placed as specified in Section 321.8.1 and compacted as specified in Section 321.8.4. The surface smoothness shall meet the tolerances specified in Section 321.8.5.

Frames and covers of manholes, survey monuments, valve boxes, clean-outs and other existing structures shall be adjusted in accordance with Section 345 to set flush with the finished surface of the new pavement. During adjustment if pavement or base materials are removed or disturbed, they shall be replaced with approved materials installed in a manner acceptable to the Engineer.

On roads without curb and gutter, the existing unpaved shoulder elevation shall be adjusted by the Contractor to match the elevation at the edge of the new overlay and slope away from the new pavement surface at a rate that the existing quantity of shoulder material will allow. Shoulder material shall be compacted to a minimum of 95% of maximum density, determined in accordance with Section 301.3. Shoulder adjustment to match the new pavement surface elevation shall not be measured. The cost of shoulder adjustment shall be included in the price paid for the asphalt concrete overlay or other related pay items. When the Engineer determines an insufficient amount of material is available for shoulder adjustment, the Engineer may require the Contractor to provide additional material. Acceptable material for shoulders includes the existing shoulder material, millings, untreated base materials, or a granular material approved by the Engineer. Engineer requested imported material for shoulder adjustment is not included in the price paid for the asphalt concrete overlay.

321.8.7 Pavement Fabric Interlayer: Pavement fabric interlayer shall be used only when specified on the plans or

in the specifications.

Pavement fabric interlayer shall be in accordance with Table 796-1 and be the class designated on the plans or in the specifications.

Asphalt binder coat used to bond the fabric to the pavement shall be paving asphalt PG 70-10 asphalt cement conforming to the requirements of Section 711. The application and distributing equipment for the asphalt binder shall conform to the requirements of Section 330. The asphalt binder coat shall be uniformly spray applied to the prepared pavement surface at the rate of 0.20 gallons per square yard for Class B fabric or at the rate of 0.25 gallons per square yard for Class A fabric. Some underlying surfaces may require a higher or lower application rate. A test strip may be necessary to determine the proper application rate. The width of liquid asphalt cement application shall be the fabric width, plus six inches.

Neither the asphalt binder coat or fabric interlayer shall be placed when weather conditions, in the opinion of the Engineer, are not suitable. The asphalt binder and fabric interlayer shall only be placed when the pavement is dry, the ambient air temperature is 50 degrees F and rising, and pavement temperature is 40 degrees F and rising.

Equipment for placing the fabric shall be mechanized and capable of handling full rolls of fabric. The equipment shall be able to lay the fabric smoothly to maximize pavement contact and remove air bubbles. Stiff bristle brooms shall be used to smooth the fabric. The equipment used to place the fabric shall be in good working order and is subject to approval by the Engineer.

Pavement fabric interlayer shall not be placed if the in-place binder is hotter than 325 degrees F or has cooled to 180 degrees F or below (as determined by non-contact thermometer).

Pavement fabric interlayer shall be placed onto the asphaltic binder with the heat bonded side up with a minimum amount of wrinkling or folding. Remaining wrinkles or folds 1-inch and larger shall be removed or slit and shingle-lapped in the direction of paving. Burning or torching of wrinkles is not allowed. Fabric shall overlap three to six inches to insure full closure of the joint. Transverse joints shall be shingle-lapped in the direction of paving to prevent edge pickup by the paver. A second application of hand-placed asphalt binder may be required at laps and repairs as determined by the Engineer to ensure proper binding of the narrow double fabric layer.

All areas where fabric has been placed shall be paved with asphaltic concrete during the same workshift. Placement of the asphaltic concrete shall closely follow fabric lay down. The temperature of the asphaltic concrete immediately behind the laydown machine shall not exceed 325 degrees F, unless modified by the WMA technology ~~is~~ being used. If WMA technology is being used then the minimum requirements will be stated within the mix design recommended by the WMA manufacturer. In the event that the asphalt binder coat bleeds through the fabric causing construction problems before the overlay is placed, the affected areas shall be sanded with a sand blotter in compliance with Section 333. Excess sand shall be removed before beginning the paving operation. In the event of rainfall prior to the placement of the asphaltic concrete, the fabric shall be allowed to dry before the asphalt concrete is placed.

Turning of the paving machine or of other vehicles on the fabric shall be gradual and kept to a minimum to avoid damage to the fabric. Should equipment tires stick to the fabric during pavement operations, small quantities of paving asphalt concrete shall be broadcast on the fabric to prevent pick-up. Decrease of binder rate in order to minimize pick-up on tires is not allowed.

321.8.8 Thickened Edge: When the depth of the thickened edge extends four inches or more below the bottom of the asphalt pavement, the portion of the thickened edge extending below the asphalt pavement shall be placed and compacted prior to placement of the asphalt pavement. Placement of tack coat on the surface of the compacted thickened edge asphalt may be omitted when additional asphalt pavement is placed on the same day and the Engineer agrees that the surface of the thickened edge asphalt has remained clean.

When the depth of the thickened edge extends less than four inches below the bottom of the asphalt pavement, the portion below the asphalt pavement may be placed and compacted with the asphalt pavement in a single operation.

321.8.9 Safety Edge: The finished safety edge slope shall be planar forming a 30° ± 5° angle with the adjacent roadway surface and extend a minimum of five inches (5") below the roadway pavement's finished surface.

The safety edge shall be constructed with the top or final paving lift of a new pavement or overlay using a device that is mounted to or is a part of the screed portion of the laydown machine. The safety edge device shall be capable of constraining the asphalt concrete material to increase density of the extruded profile by reducing the volume. A conventional single strike-off plate is not acceptable. Compaction obtained from the extruded safety edge shall be acceptable when the extruded shape conforms to the specified shape.

During laydown operations if the extruded safety edge does not conform to the specified shape, the Contractor shall take immediate actions to correct the deficiency and to repair all non-compliant sections of safety edge. The Contractor shall stop paving operations until corrections to the laydown operation have been made and resumption of paving is approved by the Engineer or his designated representative.

321.9 QUALITY CONTROL:

It is the contractor's responsibility to perform Quality Control monitoring and/or testing during asphalt concrete production to achieve the required compaction and to perform Quality Control monitoring and/or testing during asphalt concrete production to achieve the required mix properties. The Engineer may obtain samples of any portion of any material at any point of the operations for his own use. Also, the Engineer may order the use of any drying, proportioning and mixing equipment or the handling of any material discontinued which, in his/her opinion, fails to produce a satisfactory mixture.

The asphalt concrete produced shall conform to the requirements of the production tolerances established in section 321.10. When the asphalt concrete does not conform to the production tolerances, it shall be reported to the Engineer, and corrective quality control measures shall be implemented, or production shall cease immediately at no additional cost to the contracting Agency or Engineer.

321.10 ACCEPTANCE:

321.10.1 Acceptance Criteria: Unless otherwise specified, asphalt concrete will be divided into lots for the purpose of acceptance. A lot shall be considered to be one day's production. When the quantity of asphalt concrete placed in a day exceeds 500 tons but is less than 2000 tons, the lot shall be divided into 500 ton sublots or fraction thereof. Where the quantity of asphalt concrete placed in a day exceeds 2000 tons, the day's production will be divided into four (4) approximately equal sublots. A minimum of one sample will be obtained from each lot. Tests used to determine acceptance will be performed by the Engineer or a laboratory employed by the Engineer. In either case the laboratory shall be accredited by the AASHTO Accreditation Program (AAP), for the tests being performed. The acceptance laboratory will take representative samples of the asphalt concrete from each sublot to allow for gradation, binder content, air voids, pavement thickness and compaction of base and surface course. Each sublot will be accepted based upon the test data from the sample(s) from that sublot. All acceptance samples shall be taken using random locations or times designated by the Engineer in accordance with ASTM D3665.

321.10.2 Gradation, Binder Content and Air Voids: The acceptance laboratory will take a sample of the asphalt concrete in accordance with the requirements of Section 2 or 4 of Arizona Test Methods 104 or AASHTO T-168 from each sublot. The minimum weight of the sample shall be 45 pounds. Asphalt binder content and gradation shall be determined in accordance with AASHTO T-308 using the ignition furnace for each sublot. The acceptance laboratory is responsible for obtaining the necessary materials and performing an ignition furnace calibration as outlined in AASHTO T-308 for each asphalt concrete mixture utilized on the project. The correction factor used for each test shall be clearly indicated on the report. The bulk density for Marshall Mix designs shall be tested in accordance with AASHTO T-245. The bulk density for Gyratory mix designs shall be determined in accordance with AASHTO T-312. The maximum theoretical density shall be determined in accordance with the requirements of AASHTO T-209 including fan drying per AASHTO T209 Section 15. Effective voids of the laboratory compacted specimens will be determined at a minimum of once per lot in accordance with the requirements of AASHTO T-269. Should the testing for effective air voids not meet the "Full Payment" or "No Corrective Action" requirements of Table 321-5, additional testing for laboratory air voids on the remaining sublots will be performed as necessary to determine the extent of the deficiency. Acceptance testing results will be furnished to the contractor and the supplier

within five working days of receipt of samples by the acceptance laboratory.

During production, the allowable deviations from the mix design gradation targets are listed in the tables below. The allowable production tolerances may fall outside of the mix design gradation bands.

TABLE 321-3A				
GRADATION ACCEPTANCE LIMITS FOR MARSHALL MIXES				
Sieve Size	3/8 inch Mix	1/2 inch Mix	3/4 inch Mix	Base Mix
1 inch	---	---	---	±7%
3/4 inch	---	---	±7%	±6%
1/2 inch	---	±7%	---	---
3/8 inch	±7%	±6%	±6%	±6%
No. 8	±6%	±6%	±6%	±6%
No. 40	±4%	±4%	±4%	±4%
No. 200	±2%	±2%	±2%	±2%

TABLE 321-3B			
GRADATION ACCEPTANCE LIMITS FOR GYRATORY MIXES			
Sieve Size	3/8 inch Mix	1/2 inch Mix	3/4 inch Mix
3/4 inch	---	---	±7%
1/2 inch	---	±7%	±6%
3/8 inch	±7%	±6%	---
No. 8	±6%	±6%	±6%
No. 40	±4%	±4%	±4%
No. 200	±2%	±2%	±2%

If the results from a single acceptance sample fall outside of the acceptance limits in Table 321-3A or 321-3B as applicable, a second sample shall be taken and if the second acceptance sample is also outside of the acceptance limits the Contractor shall cease production of asphalt concrete. Production shall not begin again until calibration test results verify that adjustments made to materials or proportions yield a gradation that falls within acceptance limits in Table 321-3A or 321-3B as applicable.

If the asphalt binder content is within ± 0.40% of the mix design target value, the asphalt concrete will be paid for at the contract unit price. If the asphalt binder content deviates by more than ± 0.40% from the mix design target value, the deficient area will be evaluated within the sublot by coring at maximum intervals of 100 feet from the deficient sample. The asphalt content of the original deficient sample will be averaged with the asphalt binder content of the cores taken for re-evaluation to determine compliance with the acceptance requirements. If the resulting average of the asphalt binder content deviates by more than ± 0.40% from the mix design target value, then Table 321-4 shall apply to the sublot. Additional cores may be required to define the limits of the deficient area, and shall not be used for re-evaluating acceptance.

TABLE 321-4		
ASPHALT BINDER CONTENT ACCEPTANCE AND PENALTIES		
Deviation from that permitted	When the contracting agency is the owner: Payment Reduction ($ per ton of asphalt concrete)	When the contracting agency is not the owner (i.e. permits): Corrective Action
Over 0.2% above that permitted	Removal* or EA	Removal* or EA

Over 0.1% to 0.2% above that permitted	$6.00	EA
Over 0.0% to0.1% above that permitted	$2.00	EA
Within permitted range	Full Payment	No Corrective Action
Over 0.0% to0.1% below that permitted	$2.00	EA
Over 0.1% to 0.2% below that permitted	$6.00	EA
Over 0.2% below that permitted	Removal* or EA	Removal* or EA

NOTES: *The Contractor shall remove and replace the entire sublot that is deficient.
EA = Engineering Analysis per Section 321.10.6

If the laboratory air voids fall within a range of 2.8% to 6.2%, the asphalt concrete will be paid for at the contract unit price. If the laboratory air voids are outside of this range, the deficient area will be evaluated within the sublot by coring at maximum intervals of 100 feet from the deficient sample. The laboratory air voids of the original deficient sample will be averaged with the laboratory air voids obtained from each of the cores taken for re-evaluation to determine compliance with the acceptance requirements. If the resulting average of the laboratory air voids is outside the indicated range, then Table 321-5 shall apply to the sublot. Additional cores may be required to define the limits of the deficient area, and shall not be used for re-evaluating acceptance.

TABLE 321-5		
LABORATORY VOIDS ACCEPTANCE AND PENALTIES		
Laboratory Air Voids (Measured at N_{des} or 75 blows as applicable)	When the contracting agency is the owner: Payment Reduction ($ per ton of asphalt concrete)	When the contracting agency is not the owner (i.e. permits): Corrective Action
Less than 1.5%	Removal* or EA	Removal* or EA
1.5-2.0%	$5.00	EA
2.1-2.7%	$2.00	EA
2.8-6.2%	Full Payment	No Corrective Action
6.3-6.9%	$2.00	EA

7.0-8.0%	$5.00	EA
Greater than 8.0%	Removal* or EA	Removal* or EA

NOTES: *The Contractor shall remove and replace the entire sublot that is deficient
EA = Engineering Analysis per Section 321.10.6
Removal for In-place Air Voids Greater than 11.0% is not eligible for Section 321.10.6.

If an agency or Engineer is purchasing asphalt concrete directly from a commercial material supplier, the agency or Engineer will use Section 321.10, and specifically Tables 321-3A or 321-3B as applicable, 321-4 and 321-5 from Section 321.10, when determining the acceptance of the asphalt concrete with the material supplier.

321.10.3 Surface Testing: If directed by the Engineer surface drainage test shall be performed. The completed surfacing shall be thoroughly compacted, smooth and true to grade and cross-section and free from ruts, humps, depressions or irregularities. An acceptable surface shall not vary more than 1/4 inch from the lower edge of a 12-foot straightedge when the straightedge is placed parallel to the centerline of the roadway. The straightedge shall be furnished by the contractor and shall be acceptable to the Engineer.

All streets shall be water tested for drainage in the presence of the Engineer or designated representative before final acceptance. Any areas not draining properly shall be corrected to the Engineer's satisfaction at the Contractor's expense. Water for this testing shall be provided and paid for by the Contractor.

When deviations in excess of the above tolerance are found, humps or depressions shall be corrected to meet the specified tolerance, or shall be cut out along neat straight lines and replaced with fresh hot mixture and thoroughly compacted to conform with and bond to the surrounding area. Materials and work necessary to correct such deviations shall be at no additional cost to the Contracting Agency.

321.10.4 Asphalt Pavement Thickness: Asphalt Pavement thickness will be determined from cores secured from each sublot for this purpose. Such cores will be taken and measured by the Asphalt Concrete Coring Method. This method can be found at in Section 321.14. Each core location will be patched by the party responsible for the testing.

If the pavement thickness is deficient from the target thickness by 0.25 inches or less, it will be paid for at the contract unit price. If the pavement thickness deficiency is greater than 0.25 inches and the contracting agency is not the owner (i.e. permits) the following steps will apply:

(1) If the thickness deficiency of the pavement exceeds 0.25 inch, the limits of the deficient area will be evaluated by coring at maximum intervals of 100 feet from the deficient core. The thicknesses of the original deficient core will be averaged with the thicknesses of the cores taken from 100 feet on each side of it to determine compliance with the acceptance requirements. If the resulting average thickness deficiency is greater than 0.25 inch, additional cores may be required to define the limits of the deficient area, and shall not be used for re-evaluating acceptance.
(2) If the pavement thickness from step one above deviates from the target thickness by more than 0.25 inch but not more than 0.50 inch, corrective action will be required. This corrective action will consist of application of a Type II slurry seal coat in accordance to Section 715. The Contractor may present an engineering analysis outlining other proposed remedial measures for the consideration of the Engineer. The Engineer will review the engineering analysis and decide within 30 working days whether to accept the proposed remedial measures.

(3) If the pavement thickness from step one above deviates from the target thickness by more than 0.50 inch, corrective action will be required. The deficient area will be overlaid with no less than 1 inch thick lift, for the full width of the pavement to meet or exceed the designed thickness, with the appropriate end and edge milling, with a mixture approved by the Engineer. The Contractor may present an engineering analysis outlining other proposed remedial measures for the Engineer's consideration. The Engineer will review the engineering analysis and decide within 10 working days whether to accept the proposed remedial measures. If the Engineer chooses to reject the engineering analysis, the indicated overlay will be constructed by the Contractor at no

additional cost to the Owner.

If the pavement thickness deficiency is greater than 0.25 inches and the contracting agency is the owner, Table 321-6 will apply.

TABLE 321-6	
ASPHALT PAVEMENT THICKNESS PAYMENT REDUCTION For Thickness Deficiency of More Than 0.25 inches and less than 0.50 inches	
Specified Pavement Thickness	**Reduction in Payment or Corrective Action**
Less than 1.5 inches	50%
1.50 inches to 1.99 inches	33%
2.00 inches to 2.49 inches	25%
2.50 inches to 2.99 inches	20%
3.00 inches and over	17%

321.10.5 Density:

321.10.5.1 Pavement 1-1/2 Inches or Less in Nominal Thickness:

Compaction shall consist of a "Rolling Method Procedure" using an established sequence of coverage with specified types of compactors. A pass shall be defined as one movement of a compactor in either direction. Coverage shall be the number of passes as are necessary to cover the entire width being paved.

The rolling sequence, the type of compactor to be used, and the number of coverages required shall be as shown in Table 321-7.

TABLE 321-7				
ROLLING SEQUENCE FOR LIFT THICKNESS 1½" OR LESS				
Rolling Sequence	**Type of Compactor**		**No. of Coverages**	
	Option No. 1	**Option No. 2**	**Option No.1**	**Option No. 2**
Initial	Static Steel	Vibrating Steel	1	1
Intermediate	Pneumatic Tired	Vibrating Steel	4	2- 4*
Finish	Static Steel	Static Steel	1-3	1-3
* Based on the roller pattern which exhibits the best performance.				

The Contractor shall select the option for compaction and, when pneumatic-tired compactors are used will designate the tire pressure. Steel wheel compactors shall not be used in the vibratory mode for courses of one inch or less in thickness nor when the temperature of the asphaltic concrete falls below 180 degree F. Initial and intermediate compaction shall be accomplished before the temperature of the asphaltic concrete falls below 200 degree F.

Compaction will be deemed to be acceptable on the condition that the asphaltic concrete is compacted using the type of compactors specified, ballasted and operated as specified, and with the number of coverages of the compactors as specified.

321.10.5.2 Pavement Greater than 1-1/2 Inches in Nominal Thickness:

Achieving the required compaction is the responsibility of the contractor. The number and types of rollers is the contractor's responsibility and shall be sufficient to meet these requirements.

In-place air voids shall be determined in accordance with AASHTO T-269 utilizing cores taken from the finished

pavement. The maximum theoretical density used in the determination of in-place air voids will be the average value from the acceptance samples determined for the Lot as outlined in 321.10.1.

The Engineer will designate one random test location for each sublot and the acceptance laboratory will obtain one core from that location. Regardless of sublot quantities or boundaries, a minimum of one core will be obtained per residential street and a minimum of one core per travel lane for collector and arterial streets. The outside one foot of each pass of the pavement course or any unconfined edge will be excluded from testing. The Engineer may exclude areas from the compaction lot that are not accessible by normal compaction equipment.

The Contractor will provide the traffic control to facilitate any coring operations necessary for compaction acceptance.

Cores will be taken per the Asphalt Concrete Coring Method. This method can be found in Section 321.14. Acceptance testing results will be furnished to the contractor within five working days of receipt of samples by the acceptance laboratory.

If the pavement density has in-place voids of 8.0% or less, the asphalt concrete will be paid for at the contract unit price. If the pavement density has in-place voids greater than 8.0%, the deficient area will be evaluated within the sublot by coring at maximum intervals of 100 feet from the deficient core(s). If both cores in a sublot are deficient, 3 to 4 additional cores may be necessary to re-evaluate acceptance. The in-place voids of all the original core(s), whether deficient or acceptable, will be averaged with the in-place voids of the cores taken for re-evaluation to determine compliance with the acceptance requirements. If the average of the in-place voids is greater than 8.0% then Table 321-8 shall apply to the sublot. Additional cores may be required to define the limits of the deficient area, and shall not be used for re-evaluating acceptance.

TABLE 321-8		
PAVEMENT DENSITY PENALTIES		
Limits of In-place Air Voids for design lift thicknesses 1.5 inches and greater	When the contracting agency is the owner: Payment Reduction ($ per ton of asphalt concrete)	When the contracting agency is not the owner (i.e. permits): Corrective Action
Below 3.0%	Removal* or EA	Removal* or EA
3.0% to below 4.0%	$10.00	EA and Type II Surry Seal
4.0% to 8.0%	Full Payment	No Corrective Action
Greater than 8.0% to less than 9.0%	$6.00	EA
9.0% to 10.0%	$10.00	EA and Type II Surry Seal
Greater than 10.0%	Removal* or EA	Removal* or EA

NOTES: *The Contractor shall remove and replace the entire sublot that is deficient.
EA = Engineering Analysis per Section 321.10.6
Removal for In-place Air Voids greater than 11.0% is not eligible for Section 321.10.6.

321.10.6 Engineering Analysis (EA): Within 10 working days after receiving notice that a lot or sublot of asphalt concrete is deficient and is found to fall within the "Removal or EA" band per Table(s) 321-4, 321-5, and/or 321-8 the contractor may submit a written proposal (Engineering Analysis) to accept the material in place at the applicable penalties along with possible remediation(s) listed in the "Removal or EA" category. Engineering Analysis can also

be proposed for non-removal categories of "Corrective actions" when the contracting agency is not the owner (i.e. permits).

The Engineering Analysis shall contain an analysis of the anticipated performance of the asphalt concrete if left in place. The Engineering Analysis shall also detail the effect of any proposed corrective action to the material(s) in place as it relates to the in-place material's performance. The Engineering Analysis shall be performed by a professional engineer experienced in asphalt concrete testing and mix designs. If the lot or sublot is submitted for referee testing by the contractor, the ten working days allowed to prepare an engineering will begin upon notification of referee test results.

When an Engineering Analysis recommends that a specific lot or sublot should not be removed, the Engineering Analysis will recommend that the following penalties (Table 321-9) be paid when the contracting agency is the owner, for the specific criteria being reviewed by the EA.

TABLE 321-9		
ENGINEERING ANALYSIS PENALTIES for REMOVAL* LOTS/SUBLOTS LEFT IN-PLACE		
Acceptance Criteria	**Acceptance Limits**	**Penalty When Contracting Agency is the Owner ($/Ton)**
Asphalt Binder Content	Over 0.2% points from that Permitted	$9.00
Laboratory Air Voids (Measured at N_{des} or 75 blows as applicable)	Less than 1.5% or Greater Than 8.0%	$3.75
Limits of In-place Air Voids	10.1% to 11.0%	$9.00

Within 15 working days, the Engineer will determine whether or not to accept the contractor's proposed Engineering Analysis.

321.11 REFEREE:

In the event the contractor elects to question the acceptance test results for either asphalt binder content, laboratory air voids, density or a combination thereof for a sublot, the Contractor may make a written request for additional testing of that sublot. Any request for referee testing must describe the contractor's reasons for questioning the validity of the original acceptance results and must clearly describe which set of acceptance tests are in question. The Contractor will engage an independent laboratory (at the Contractors own expense) who is accredited by AAP in all of the acceptance test methods. The independent laboratory shall be acceptable to the Engineer and shall perform a new set of acceptance tests as required by Section 321.10 representing the area or set of tests in question. The results of these determinations will be binding on both the contractor and the agency.

These tests may include asphalt binder content, aggregate gradation, Marshall or Gyratory unit weight, maximum theoretical unit weight, laboratory air voids and in-place air voids (compaction). Samples for referee testing shall come from representative samples obtained from the completed pavement, as directed by the Engineer.

The number of samples taken will be the same as specified in Section 321.10. The independent laboratory shall compile the test results and transmit them to both the Engineer and the contractor. The independent laboratory shall include a report signed by an Engineer registered in the State of Arizona, who is experienced in asphalt concrete testing and mix design development. The signed report shall give an opinion that the material evaluated does or does not comply with project specifications, shall clearly describe any deficiencies, and the results will be binding between all parties.

321.12 MEASUREMENT:

Asphalt concrete pavement will be measured by the ton, or by the square yard, for the mixture actually used as

allowed above, which shall include the required quantities of mineral aggregates, asphalt binder, and mineral admixture. Measurement shall include any tonnage used to construct intersections, roadways, streets, or other miscellaneous surfaces indicated on the plans or as directed by the Engineer.

321.13 PAYMENT:

The asphalt concrete measured as provided above will be paid for at the contract price per ton or square yard, as adjusted per Section 321.10, which price shall be full compensation for the item complete, as herein described and specified.

Payment for tack coat will be by the ton diluted, based on the rate of application, as directed by the Engineer.

No payment will be made for any overrun in quantity of asphalt concrete in excess of 10 percent based on actual field measurement of area covered, design thickness, and the mix design unit weight. The calculations and payment for overrun will be by individual pay item. To compensate or adjust for a thickness deficiency in an underlying asphalt concrete course, the Engineer may authorize a quantity increase in excess of 10 percent for a subsequent asphalt concrete course. In such cases, the quantity in excess of 10 percent will be paid for at the lowest unit price.

Agency required repairs of existing pavement prior to roadway overlay operations will be paid for as a separate pay item.

Except as otherwise specified, no separate payment will be made for work necessary to construct miscellaneous items or surfaces of asphalt concrete.

321.14 ASPHALT CORE METHOD: Core Drilling of Hot Mix Asphalt (HMA) for Specimens of 4" or 6" diameter

321.14.1 Scope: This method is to establish a consistent method of the use of a diamond bit core to recover specimens of 4 or 6 inch diameter for laboratory analysis and testing. The method will require the use of: water, ice (bagged or other suitable type), dry ice, and a water-soap solution to be utilized when coring asphalt rubber concrete. Individuals doing the specimen recovery should be observing all safety regulations from the equipment manufacturer as well as the required job site safety requirements for actions, and required personal protective equipment.

321.14.2 Core Drilling Device: The core drilling device will be powered by an electrical motor, or by an acceptable gasoline engine. Either device used shall be capable of applying enough effective rotational velocity to secure a drilled specimen. The specimen shall be cored perpendicularly to the surface of pavement, and that the sides of the core are cut in a manner to minimize sample distortion or damage. The machinery utilized for the procedure shall be on a mounted base, have a geared column and carriage that will permit the application of variable pressure to the core head and carriage throughout the entire drilling operation. The carriage and column apparatus shall be securely attached to the base of the apparatus; and the base will be secured with a mechanical fastener or held in place by the body weight of the operator. The core drilling apparatus shall be equipped with a water spindle to allow water to be introduced inside of the drill stem while operating. The cutting edge of the core drill bit shall be of hardened steel or other suitable material with embedded diamond chips in the cutting surface. The core barrel shall be of sufficient diameter to secure a specimen that is a minimum of four or six inches or whichever is prescribed for necessary testing. The core barrel shall not be missing more than one of the teeth used for cutting; if so it shall be discarded and another barrel shall be used. The core barrel shall also be a minimum of two inches longer than the anticipated depth of pavement in accordance with project paving plans.

321.14.3 Accessory Equipment: A sufficient supply of ice and dry ice shall be provided to sufficiently cool the pavement prior to securing the samples from the designated areas in the pavement. The ice should also be used to adjust the temperature of the water used to cool the core bit. A water supply (usually a plastic 35 – 55 gal drum) with sufficient hose to introduce the water into and through the spindle of the coring device by gravity feed. The drum should be white or light in color to minimize excessive thermal heating of the water (*for coring of asphalt rubber cores see Note 1*). At no time shall the water utilized in the coring operation exceed 65° F during the coring operation. Ice shall be utilized to ensure the temperature control of the water being introduced during the cutting

operation. An ice chest or other suitably insulated container that can maintain a temperature of less than 70° F shall be used to secure the specimens during transport. The container will be equipped with flat shelving that will support the drilled cores throughout the entire specimen dimension during transport back to the testing facility.

Miscellaneous hand tools to remove the drilled specimen from the drill hole or the core barrel taking great care in not disturbing the specimen more than necessary (refer to fig. 1 in ASTM D5361-05).

321.14.4 Process: The pavement surface at the time of coring shall not exceed a temperature of 90° F; the pavement shall be conditioned with ice or dry ice to ensure that this requirement is met. Immediately after it has been ensured that the pavement has dropped to the required temperature, core drilling shall begin. The operator will then apply an even and continuous pressure (Note 2) to penetrate through the full depth of the pavement. The operator will concurrently ensure that enough water is moving over the core surface as to adequately remove any and all cuttings that could damage the drilled core. After the pavement thickness has been penetrated the core shall be carefully removed from either the drill hole or the core barrel and be immediately transferred to an ice chest or other suitable container. Each individual core shall be placed on a shelf in the cooler with the exposed side of the specimen facing down, or the "top side" down. If the specimen is a two lift core, the only acceptable means of separating lifts is with a power or other acceptable wet saw type of equipment (conforming to ASTM D5361-05); however, at no time shall cores be split using a mallet and screwdriver or metal straight edge when being tested for bulk density. Perpendicularity of the specimen shall be checked in the field after the specimen has been extracted from the surface. The core operator shall hold the core up to eye level and place the core top side down in a "speed square" or small carpenters square. The specimen placed in the square shall not depart from perpendicular to the axis more than 0.5^o (approximately equivalent to 1/16 of an inch in 6 inches). If the specimen is outside of this distance from square it shall be discarded in the field and another sample cored that falls within tolerance. The cores upon arriving at the laboratory for testing shall be carefully cleaned and measured for thickness in accordance with ASTM D3549. A speed square shall be utilized to measure perpendicularity as compared to a 90° degree angle and shall not depart from perpendicular to the axis more than 0.5^o (approximately equivalent to 1/16 of an inch in 6 inches). All remaining testing shall be done within the parameters of the current project and / or agency required specification.

- End of Section -

*Note 1 – It should be noted that when the material to be cored is a rubberized asphalt mixture a wetting agent such as liquid dish soap shall be added to the water barrel to hinder the material from sticking or allowing the binder to spread during coring.

*Note 2 – This refers to pressure exerted on the core barrel and machine during the coring process. Too much pressure can cause damage to the core barrel and the motor; and too little pressure can cause a glazing of the diamonds, reducing cutting efficiency and premature wear of the barrel

SECTION 710

ASPHALT CONCRETE

710.1 GENERAL:

Asphalt concrete shall be a mixture of asphalt cement and mineral aggregates. Mineral admixture shall be included in the mixture when required by the mix design or by the Engineer. Asphalt concrete shall be produced in accordance with Section 321.

The designation for asphalt concrete mixes shall be based on the nominal maximum aggregate size of the mix. The applicable mix designations are 3/8 inch, 1/2 inch, 3/4 inch and Base (1") mix.

Each mix shall be designed using Marshall or Gyratory compaction methods. Either Gyratory or Marshall Mixes may be used for low or high traffic conditions, as determined by the agency. Low traffic conditions are conditions where the asphalt mix will be subject to low volume and low weight vehicle usage. Examples of this condition are residential streets, most parking lots and residential minor collector streets. High traffic conditions are conditions where the asphalt mix will be subject to high volume and/or heavy weight vehicle usage as found on major collector, arterial and commercial streets. Street classifications (i.e. minor collector and major collector) shall be determined by the specifying agency.

The following table (Table 710-1) displays the recommended lift thickness for various asphalt concrete mix designations found within Section 710. Please note that these recommended lift thicknesses are minimums based on each mix designation's "Nominal Aggregate Size" and the relative coarseness of its gradation. The compacted thickness of layers placed shall not exceed 150% of the Minimum Lift Thickness of Table 710-1 except as otherwise provided in the plans and specifications, or if approved in writing by the Engineer.

TABLE 710-1		
RECOMMENDED MINIMUM LIFT THICKNESS FOR ASPHALT CONCRETE MIXES		
Asphalt Concrete Mix Designation (inches)	Minimum Lift Thickness Marshall Mixes	Minimum Lift Thickness Gyratory Mixes
3/8"	1.0 inches	1.5 inches
1/2"	1.5 inches	2.0 inches
3/4"	2.5 inches	3.0 inches
Base	3.0 inches	n/a

710.2 MATERIAL:

710.2.1 Asphalt Binder: The asphalt binder specified in this section has been developed for use in desert climate conditions. When used in other climates, consideration should be given to adjustments in the asphalt binder selection. The asphalt binder shall be Performance Grade Asphalt conforming to the requirements of Section 711 for PG 70-10, unless otherwise approved by the Engineer or specified differently in the plans or special provisions.

710.2.2 Aggregate: Coarse and Fine aggregates shall conform to the applicable requirements of this section. Coarse mineral aggregate shall consist of crushed gravel, crushed rock, or other approved inert material with similar characteristics, or a combination thereof, conforming to the requirements of these specifications.

Coarse aggregate for hot mix asphalt is material retained on or above the No. 4 sieve and Fine aggregate is material passing the No. 4 sieve. Aggregates shall be relatively free of deleterious materials, clay balls, and adhering films or other material that prevent coating with the asphalt binder. Coarse and Fine aggregates shall conform to the following requirements when tested in accordance with the applicable test methods.

TABLE 710-2			
COARSE/FINE AGGREGATE REQUIREMENTS			
Characteristics	Test Method	Low Traffic	High Traffic
Fractured Faces, % (Coarse Aggregate Only)	Arizona 212	75, 1 or more	85, 1 or more 80, 2 or more
Uncompacted Voids, % Min.	AASHTO T-304, Method A	42	45
Flat & Elongated Pieces, % 5:1 Ratio	ASTM D4791	10.0 Max.	10.0 Max.
Sand Equivalent, %	AASHTO T-176	50 Min.	50 Min.
Plasticity Index	AASHTO T-90	Non-plastic	Non-plastic
L.A. Abrasion, %Loss	AASHTO T-96	9 max. @ 100 Rev. 40 max. @ 500 Rev.	9 max. @ 100 Rev. 40 max. @ 500 Rev.
Combined Bulk Specific Gravity	AI MS-2/SP-2	2.35 – 2.85	2.35 – 2.85
Combined Water Absorption	AI MS-2/SP-2	0 – 2.5%	0 – 2.5%

Tests on aggregates used in asphalt concrete outlined above, shall be performed on materials furnished for mix design purposes and composited to the mix design gradation.

Blend sand (naturally occurring or crushed fines) shall be clean, hard and sound material which will readily accept asphalt binder coating. The blend sand grading shall be such that, when it is mixed with the other mineral aggregates, the combined product shall meet the requirements of Table 710-2.

The natural sand shall not exceed 20 percent for the Marshall mixes and 15 percent for the Gyratory mixes by weight of the total aggregate for a mix.

710.2.3 Reclaimed Asphalt Pavement (RAP): When allowed by the Engineer, Reclaimed Asphalt Pavement (RAP), as defined in Section 701.5, may be used in asphalt concrete provided all requirements of Section 710 are met. References to use of RAP in Section 710 apply only if RAP is used as part of the mixture.

When RAP is used in asphalt concrete, it shall be of a consistent gradation, asphalt content, and properties. When RAP is fed into the plant, the maximum RAP particle size shall not exceed 1 1/2 in. The percentage of asphalt in the RAP shall be established in the mix design. The percentage of RAP binder shall be established in the mix design.

When RAP is used in base and intermediate courses, the amount of RAP aggregate and RAP binder should not exceed 30% contribution; Surface courses should be limited to 20% RAP aggregate and RAP binder contribution.

In addition to the requirements of Section 710.3.1, the job mix formula shall indicate the percent of asphalt RAP and the percent and performance grade of virgin (added) asphalt binder.

When less than or equal to 15% RAP binder is used by weight of total binder in the mix, the added virgin binder shall meet the requirements for PG 70-10 as shown in Section 711. When greater than 15% RAP is used by weight of the total binder in the mix, the added virgin binder will be dropped one grade for low and high temperature properties to a PG 64-16, unless testing indicates that the blend of the recovered RAP binder and virgin binder meets the requirements for PG 70-10 as shown in Section 711. The virgin asphalt binder shall not be more than one standard asphalt material grades different than the specified mix design binder grade.

710.2.4 Mineral Admixture: Mineral admixture when used as an anti-stripping agent in asphalt concrete shall conform to the requirements of AASHTO M-17. Mineral admixture used in asphalt concrete shall be dry hydrated lime, conforming to the requirements of ASTM C1097 or Portland cement conforming to ASTM C150 Type II or

ASTM C595 Type IP. The amount of hydrated lime or Portland cement used shall be determined by the mix design. The minimum Mineral admixture content within a mix will be 1.00 percent, by weight of total aggregate.

710.3 MIX DESIGN REQUIREMENTS:

710.3.1 General: The mix design for asphalt concrete shall be prepared by a laboratory that is accredited through the AASHTO Accreditation Program (AAP) in Hot Mix Asphalt Aggregates and Hot Mix Asphalt. The laboratory shall be under the direct supervision of a Civil Engineer, registered by the State of Arizona, and who is listed by ADOT as a "Qualified Asphaltic Concrete Mix Design Engineer" within ADOT's latest list of approved laboratories. The latest list of approved laboratories is available on ADOT's web page www.azdot.gov. The date of the design shall not be older than one year from the date of submittal, unless supportive documentation is provided and approved by the Engineer.

The mix design report shall include the following elements as a minimum.

(1) The name and address of the testing organization and the person responsible for the mix design report.

(2) The mix plant identification and/or location, as well as the supplier or producer name.

(3) A description of all products that are incorporated in the asphalt concrete along with the sources of all products, including admixtures and asphalt binder, and their method of introduction.

(4) The supplier and grade of asphalt binder, the source and type of mineral aggregate, and the percentage of asphalt binder and mineral admixture used.

(5) The percentage of RAP and RAP Binder being contributed to the total mix shall be included in the mix design report.

(6) The mix design report whether Gyratory or Marshall shall state the traffic condition (low or high traffic) and size designation.

(7) The results of all testing, determinations, etc., such as: specific gravity and gradation of each component, water absorption, sand equivalent, loss on abrasion, fractured coarse aggregate particles, Tensile Strength Ratio (ASTM D 4867), Marshall stability and flow, asphalt absorption, percent air voids, voids in mineral aggregate, and bulk density. Historical abrasion values may be supplied on existing sources. The submittal should include a plot of the gradation on the Federal Highway Administration's 0.45 Power Gradation Chart, plots of the compaction curves and the results of moisture sensitivity testing.

(8) The laboratory mixing and compaction temperature ranges for the supplier and grade of asphalt binder used within the mix design.

(9) A specific recommendation for design asphalt binder content and any limiting conditions that may be associated with the use of the design, such as minimum percentages of crushed or washed fine aggregate.

(10) The supplier's product code, the laboratory Engineer's seal (signed and dated), and the date the design was performed.

(11) If a Warm Mix Technology or Additive is used; the following ~~must~~ shall be included:

- Technology Type and Supporting Manufacturer information; including instructions pertaining to laboratory mixture temperatures and curing.
- Amount (%) of additive (technology) used in- the mixture.
- Attached copy of the ADOT approved product list, showing additive / technology

- Minimum plant production temperature shall not fall below manufacturer's recommendation. ~~(250° F recommended)~~
- Minimum compaction temperature shall ~~not fall below manufacturers recommendation~~be identified.

The mix design shall be submitted to the Agency or Engineer by the Contractor/Supplier for which it was developed as part of his project submittals. Once the mix design has been approved by the agency or Engineer, the Contractor and/or his supplier shall not change plants nor use additional mixing plants without prior approval of the Engineer. Any changes in the plant operation, the producer's pit, the asphalt binder, including modifiers in the asphalt binder, or any other item that will cause an adjustment in the mix, shall be justification for a new mix design to be submitted.

710.3.2 Mix Design Criteria: The mix design shall be performed by one of two methods, Marshall Mix Design or Gyratory Mix Design. The method shall be specified on the plans, special provisions, or by the Engineer. A minimum of 4 points will be used to establish the mix design results. The oven aging period for both Marshall and Gyratory mix design samples shall be 2 hours.

710.3.2.1 Marshall Mix Design: The Marshall Mix Design shall be performed in accordance with the requirements of the latest edition of the Asphalt Institute's Manual, MS-2 "Mix Design Methods for Asphalt Concrete." The mix shall use the compactive effort of 75 blows per side of specimen. The mix shall comply with the criteria in Table 710-3.

TABLE 710-3

MARSHALL MIX DESIGN CRITERIA

Criteria	Requirements				Designated Test Method
	3/8" Mix	1/2" Mix	3/4" Mix	Base Mix	
1. Voids in Mineral Aggregate: %, min	15.0	14.0	13.0	12.0	AI MS-2
2. Effective Voids: %, Range	4.0±0.2	4.0 ±0.2	4.0 ±0.2	4.0 ±0.2	AI MS-2
3. Absorbed asphalt: %, Range*	0-1.0	0-1.0	0-1.0	0-1.0	AI MS-2
4. Dust to Eff. Asphalt Ratio, Range **	0.6-1.4	0.6-1.4	0.6-1.4	0.6-1.4	AI MS-2
5. Tensile Strength Ratio: % Min.	65	65	65	65	ASTM D 4867
6. Dry Tensile Strength: psi, Min.	100	100	100	100	ASTM D 4867
7. Stability: pounds, Minimum	2,000	2,500	2,500	3,000	AASHTO T-245
8. Flow: 0.01-inch, Range	8-16	8-16	8-16	8-16	AASHTO T-245
9. Mineral Aggregate Grading Limits					AASHTO T-27

	Percent Passing with Admix			
Sieve Size	3/8 inch Mix	1/2 inch Mix	3/4 inch Mix	Base Mix
1-1/4 inch				100
1 inch			100	90-100
3/4 inch		100	90 – 100	85-95
1/2 inch	100	85 – 100	---	---
3/8 inch	90-100	62 – 85	62 – 77	57-72
No. 8	45-60	40 – 50	35 – 47	33-43
No. 40	10-22	10 – 20	10 – 20	9-18
No. 200	2.0 – 10.0	2.0 – 10.0	2.0 – 8.0	1.0 – 7.0

* Unless otherwise approved by the Engineer.

** The ratio of the mix design composite gradation target for the No. 200 sieve, including admixture, to the effective asphalt content shall be within the indicated range.

710.3.2.2 Gyratory Mix Design: Gyratory Mix Designs shall be performed in accordance with the requirements of latest edition of the Asphalt Institute's SP-2 manual. Mix design laboratory compacted specimens shall be prepared using a gyratory compactor in accordance with AASHTO T-312.

The mix design shall be formulated in a manner described for volumetric mix designs in the current edition of the Asphalt Institute Manual SP-2, except the number of trial blend gradations necessary will be determined by the mix design laboratory. Duplicate gyratory samples shall be prepared at a minimum of four (4) binder contents to select the recommended binder content. The gyratory specimens shall be compacted to 160 gyrations. Volumetric data for the design number of gyrations, N_{des}, and the initial number of gyrations, N_{ini}, are then back calculated based on the bulk specific gravity, G_{mb}, of the N_{max} specimens and the height data generated during the compaction process of those same specimens.

For Low traffic designs, volumetric data for 115 gyrations, N_{max} for Low Traffic designs, is also back calculated from the specimens compacted to 160 gyrations.

The corrected density of the specimens shall be less than 89.0 percent of maximum theoretical density at N_{ini}. The corrected density of the specimens shall be less than 98.0 percent of maximum theoretical density at N_{max}. The Gyratory mix shall comply with the criteria in Table 710-4.

TABLE 710-4				
GYRATORY MIX DESIGN CRITERIA				
Criteria	**Requirements**			**Designated Test**
	3/8" Mix	**1/2" Mix**	**3/4" Mix**	**Method**
1. Voids in Mineral Aggregate: %, Min.	15.0	14.0	13.0	AI SP-2
2. Effective Voids: %, Range	4.0 ± 0.2	4.0 ± 0.2	4.0 ± 0.2	AI SP-2
3. Absorbed Asphalt: %, Range *	0 - 1.0	0 - 1.0	0 - 1.0	AI SP-2
4. Dust to Eff. Asphalt Ratio, Range **	0.6 – 1.4	0.6 – 1.4	0.6 – 1.4	AI SP-2
5. Tensile Strength Ratio: %, Min.	75	75	75	ASTM D 4867
6. Dry Tensile Strength: psi, Min.	75	75	75	ASTM D 4867
7. Mineral Aggregate Grading Limits				AASHTO T-27
	Percent Passing with Admix			
Sieve Size	**3/8 inch Mix**	**1/2 inch Mix**	**3/4 inch Mix**	
1 inch			100	
3/4 inch		100	90-100	
1/2 inch	100	90-100	43-89	
3/8 inch	90-100	53-89	-	
No. 8	32-47	29-40	24-36	
No. 40	2-24	3-20	3-18	
No. 200	2.0-8.0	2.0-7.5	2.0-6.5	
8. Number of Gyrations	**Low Traffic**		**High Traffic**	
N_{ini}	7		8	
N_{des}	75		100	
N_{max}	115		160	

* Unless otherwise approved by the Engineer.

** The ratio of the mix design composite gradation target for the No. 200 sieve, including admixture, to the effective asphalt content shall be within the indicated range.

710.3.2.3 Moisture Sensitivity Testing: Moisture sensitivity testing will be performed in accordance with ASTM D4867 for both Marshall and Gyratory mix designs, without the freeze/thaw cycles. The minimum required Tensile Strength Ratio is indicated in the tables above.

- End of Section

MARICOPA COUNTY
Department of Transportation

MEMORANDUM

Date: June 4, 2014

To: MAG Specifications and Details Committee

From: Robert Herz, MCDOT Representative

Subject: Proposed Revisions to Sections 336.3 and 336.4 **Case 14-12**

PURPOSE: Add pavement removal criteria to prevent full depth pavement cuts from being located within a lane wheel path and to prevent creation of narrow pavement edge strips.

REVISIONS:

336.3 TYPES AND LOCATIONS OF PAVEMENT AND SURFACING REPLACEMENT:

The match point location for full depth longitudinal pavement cuts within asphalt pavements shall not be located within a lane wheel path. When the standard match point falls in a lane wheel path, the surface matching point shall be moved. The lane wheel path is the entire lane width except the area within one foot of a lane line stripe and except the center two feet of the travel lane.

Full depth pavement cuts shall not be located within 48" of any asphalt pavement edge. When the match point is located within 48" of an asphalt pavement edge, the asphalt pavement shall be removed and replaced to the pavement edge. When concrete curb and gutter exist adjacent to asphalt pavement, the lip of gutter shall be considered an edge of the asphalt pavement. A safety edge or thickened edge (Detail 201) shall be constructed for all non-curbed pavements that are being replaced to the edge of pavement.

When curb or gutter replacement occurs adjacent to a designated bike lane or paved shoulder area wider than three feet, the asphalt pavement removal and replacement shall extend to within 6 inches of the travel lane edge stripe. For curb or gutter replacement when no travel lane edge stripe exists, the asphalt pavement match point shall extend two feet or less from the pavement edge into the vehicle travel lane.

Normally, the type of pavement replacement and backfill required for trenches will be noted on the plans or specified in ~~other portions of~~ the contract documents and construction will be in accordance with Detail 200-1 and 200-2 except the location of full depth asphalt pavement cuts shall comply with the above stated requirements. If a type is not noted on the plans or specified in the special provisions, the following criteria will govern:

Type A trench repair will be utilized on all streets where the excavation is essentially longitudinal or parallel to traffic.

T-Top trench repair will be utilized on all streets where the excavation is essentially transverse or not parallel to traffic, including trenches that go through an intersection. Type B trench repair may be used to repair transverse trenches if specified by the Agency.

2901 West Durango Street Phoenix, Arizona 85009 Phone: 602-506-4760 Fax: 602-506-5969

Type C trench repair will be used to repair existing Portland cement concrete pavement.

Type D trench repair will be utilized to repair surfaces other than asphalt concrete or Portland cement concrete pavement. It may also be used when the condition of the existing pavement does not justify construction of Type A, Type B or T-Top trench repair. Prior written approval of the Engineer is required for this condition.

Where a longitudinal trench is partly in pavement, the pavement shall be replaced to the outside edge of the existing pavement, on a straight line, as indicated on the plans. Measurements for payment shall be from the inner limit of pay width allowed below, to the outside edge of the existing pavement as defined herein.

Where no part of a trench is in pavement, surfacing replacement will only be specified where existing surfacing materials have been removed.

When a trench cut is in aggregate surfaced area, the surfacing replacement shall be of a like type and depth as the existing material, compacted to the densities required in Section 601.

336.4 MEASUREMENT:

Measurement for payment and surfacing replacement shall be by the square yard, based upon actual field measurement of the area covered except as noted below.

(A) In computing pay quantities for replacement Types B and E, pay widths will be based on the actual field measured width; however the boundaries of the measurement will not extend further than ½ the distance, either side, from the centerline of the pipe as depicted on Table 601-1, maximum width at top of pipe greater than O.D. of barrel.

(B) In computing pay quantities for replacement Types T-Top, A, C and D, pay widths will be based on the actual field measured width, however the boundaries of the measurement will not extend further than ½ the distance plus 12 inches, either side, from the centerline of the pipe as depicted on Table 601-1, maximum width at top of pipe greater than O.D. of barrel. In all cases, the minimum pay width for replacement Types T-Top, A and D shall be 48 inches. The pay width for pavement replacement will extend to the adjusted field width required when the surface match point is adjusted to be outside of a wheel path or is required to be relocated to the edge of the asphalt pavement.

(C) Where a longitudinal trench is partly in pavement, computations of pay quantities shall be based on the limitations specified above.

(D) The length of pavement and surfacing replacement shall be measured through any manhole, valve box, or other structure constructed in the pipe line, and any pavement or surface replacement and/or seal treatment in excess of the above pay widths shall be considered and included in the bid item for such structure.

(E) Any pavement replacement in excess of the specified pay widths necessitated by the installation of valves, tapping sleeves and valves, valve by-passes, and concrete thrust blocks shall be included in the bid price for these items.

(F) When special provisions allow deviations from the trench widths specified in Section 601, the above allowed pay widths for pavement replacement may be altered where so specified.

(G) Measurement of pavement and surfacing replacement shall be made along the finished surface of the ground to the nearest foot, and shall be computed to the nearest square yard.

MARICOPA COUNTY
Department of Transportation

MEMORANDUM

Date: June 4, 2014

To: MAG Specifications and Details Committee

From: Robert Herz, MCDOT Representative

Subject: Revisions to Section 321 from MCDOT Supplement **Case 14-13**

PURPOSE: Incorporate MCDOT enhancements to Section 321 PLACEMENT AND CONSTRUCTION OF ASPHALT CONCRETE PAVEMENT into the MAG Specifications.

REVISIONS:

321.8 – Added requirement for adjacent facilities to be in acceptable condition prior to commencing with asphalt paving operations.

321.8.2 – Added tack coat requirement for traverse joints with existing pavement.
– Require longitudinal construction joint to not deviate more than ¼ inch from a 12-foot straightedge positioned in any direction.

321.8.4 – Added disclaimer: The minimum temperatures in Table 321-2 do not guarantee that the asphalt mix will be compacted to the required density. The contractor is responsible to achieve the required compaction.

321.8.10 – Added new section for the protection of asphalt base courses on arterial roadways.

321.9 – Referee Testing requests are required to be based on valid Quality Control Test results.

321.10.1 – Adjusted acceptance testing procedure.

321.10.3 – Added pavement removal criteria that prevents full depth pavement cuts to be located within a lane wheel path and prevents creation of narrow pavement edge strips.

321.10.4 – Expanded corrective measures to be taken when total pavement thickness deficiency is 0.50 inches or greater for agency contracted work.

321.11 – Revised requirements for referee testing.

2901 West Durango Street Phoenix, Arizona 85009 Phone: 602-506-4760 Fax: 602-506-5969

PLACEMENT AND CONSTRUCTION OF ASPHALT CONCRETE PAVEMENT

321.1 DESCRIPTION:

This section is to provide specifications for furnishing all materials, mixing at a plant, hauling and placing a mixture of aggregate materials, mineral admixture and asphalt binder to form a pavement course for placement upon a previously prepared base or sub base.

321.2 MATERIALS AND MANUFACTURE:

The materials shall conform to Section 710 for the type specified. The specific required mix type shall be called out in the contract documents or as directed by the Engineer.

321.3 WEATHER AND MOISTURE CONDITIONS:

Asphalt concrete shall be placed only when the surface is dry, and when the atmospheric temperature in the shade is 40 degrees F. (50 degrees F for Asphalt Concrete lift less than 2 inch thick) or above. No asphalt concrete shall be placed when the weather is foggy or rainy, or when the base or sub base on which the material is to be placed is unstable. Asphalt concrete shall be placed only when the Engineer determines that weather conditions are suitable.

321.4 APPLICATION OF TACK COAT:

A tack coat shall be applied to all existing and to each new course of asphalt concrete prior to the placing of a succeeding lift of asphalt concrete. The tack coat may be deleted when a succeeding layer of asphalt concrete is being applied over a freshly laid course that has been subjected to very little traffic when approved by the Engineer.

The application of the tack coat shall comply with Section 329. The grade of emulsified asphalt shall be SS-1-h or CSS-1-h as specified in Section 713.

The same material that is specified above for the tack coat shall be applied to the vertical surfaces of existing pavements, curbs, and gutters, against which asphalt concrete is to be placed.

The surface to be covered may require repair or patching as directed by the Engineer. This shall be addressed in the project specifications prior to the bidding of the project.

321.5 MIX DESIGN

The mix design shall be submitted to the Engineer at least five working days prior to the start of asphalt concrete production. Mix designs provided by the agency may be utilized on projects at the Engineer's discretion. The Engineer will review and approve the mix design to assure it contains all of the required information as outlined in Section 710.3.1. The target values for gradations, binder contents, and air voids will be established as the accepted Job Mix Formula (JMF) based upon the mix design. Mix designs not containing all of the information will be returned within five working days of receipt of all mix design information, for action and resubmission by the contractor.

Once the mix design has been approved by the agency and the mixing plant selected, the Contractor and/or his supplier shall not change plants nor utilize additional mixing plants without prior approval of the Engineer.

If the contractor elects to change its source of material, the contractor shall furnish the Engineer with a new mix design, which meets the requirements of Section 710, as amended by the Project Specifications.

The contractor may make self-directed target changes to the approved mix design within the limits shown below. Requests for self-directed target changes shall be made in writing and acknowledged by the Engineer prior to the start of production of a lot and will remain in effect until such time as any additional changes are implemented. The self-directed target changes must meet the contract requirements for mix design criteria and gradation limits.

TABLE 321-1 ALLOWABLE SELF-DIRECTED TARGET CHANGES	
MEASURED CHARACTERISTICS	ALLOWABLE SELF-DIRECTED TARGET CHANGES
Gradation (Sieve Size)	
3/8 inch	± 4% from mix design target value
No 8	± 4% from mix design target value
No 40	± 2% from mix design target value
No 200	+0.5% from mix design target value
Binder Content	± 0.2% from mix design target value
Effective Air Voids	None

The contractor may propose target changes, other than self-directed changes, to the approved mix design for the approval of the Engineer. The Engineer will determine if the proposed target change will result in mix production that meets the contract requirements for mix design criteria and gradation limits. The target changes will not be retroactive for the purpose of acceptance.

321.6 MIX PRODUCTION:

All materials shall be proportioned by weight in a hot mix asphalt plant in the proportions required by the mix design to provide a homogeneous and workable mass. Each hot mix asphalt plant shall be inspected in accordance with the provisions contained in the 'Hot Mix Asphalt Production Facilities' by the Arizona Rock Products Association and shall have a current inspection certificate. All measuring devices shall be calibrated at least annually by a technician licensed by the Arizona Bureau of Weights & Measures. Mixing plants shall conform to the requirements of AASHTO M-156, except as modified herein.

In drum mix plants the mineral admixture shall be added and thoroughly mixed with the mineral aggregate by means of a mechanical mixing device prior to the mineral aggregate and mineral admixture entering the dryer. The moisture content of the combined mineral aggregate shall be a minimum of three percent by weight of the aggregate during the mixing process.

For drum-mix plants, the mineral admixture shall be weighed across a weight belt, or other approved alternative weighing system, with a weight totalizer prior to entry into the mechanical mixing device. The mechanical mixing device shall be a pugmill type mixer that is in good working condition. The rate of the aggregate feed shall not exceed the mixing device's capacity in ton per hour. The mixer shall be constructed to minimize the loss of mineral admixture and shall be located in the aggregate delivery system at a location where the mixed material can be readily inspected. The mixing device shall be capable of effective mixing in the full range of the asphalt concrete production rates.

The hot plant and equipment shall be constructed and operated to prevent loss of mineral admixture through the dust collection system of the plant.

A positive signal system shall be provided and utilized during production whereby the mixing shall automatically be stopped if the mineral admixture is not introduced into the mineral aggregate. The plant will not be permitted to operate unless the signal system is in good working condition.

The introduction of bituminous material shall be controlled by an automated system fully integrated with the controls or the mineral aggregate and mineral admixture. The production of the plant shall be controlled by the rate required to obtain a uniform mixture of all components. Drying and heating shall be accomplished in such a manner as to preclude the mineral admixture from becoming coated with un-spent fuel. The completed asphalt concrete may be held in storage for up to 12 hours in insulated or heated silos, providing the minimum temperature noted herein for placement and compaction is met behind the placement device. If the Engineer determines that there is an

excessive amount of heat, heat loss, drain down, segregation and/or oxidation of the mixture due to temporary storage, use of surge bins or storage bins will be discontinued.

The temperature of the asphalt concrete, with unmodified binders, upon discharge from the mixer shall not exceed 335 degrees F. The discharge temperature may be increased on the recommendation of the binder supplier, when approved by the Engineer. If the asphalt concrete is discharged from the mixer into a hopper, the hopper shall be constructed so that segregation of the asphalt concrete will be minimized.

321.7 TRANSPORTATION:

Petroleum distillates or other substances that will have a detrimental effect on the asphalt concrete shall not be used as a release agent.

The beds of all transportation units shall be clean and smooth to allow the free flow of material into the paving machine's hopper.

Tarpaulins shall be furnished on all trucks and used when weather condition warrant, or if directed by the Engineer.

321.8 PLACEMENT:

Placement of asphalt concrete pavement shall not commence until authorized by the Engineer. The Engineer's authorization to allow commencement of asphalt concrete paving will generally require all valley gutters, curbing, and curb and gutters which new pavement is to be placed against be in-place and in an acceptable condition i.e. all defective concrete items which new pavement is to be placed against have been replaced.

321.8.1 Placing: All courses of asphalt concrete shall be placed and finished by means of a self-propelled paving machine equipped with an automatically actuated control system, except under certain conditions or at locations where the Engineer deems the use of a self-propelled paving machine impracticable.

The control system shall control the elevation of the screed at each end by controlling the elevation of one end directly and the other end indirectly either through controlling the transverse slope or alternatively when directed, by controlling the elevation of each end independently.

The control system shall be capable of working with one of the following devices:

(a) Ski or non-contact device of not less than 30 feet in length, supported throughout its entire length
(b) Taut stringline or wire set to grade
(c) Short ski or sonar sensing units from curb control
(d) Joint matching shoe

Failure of the control system to function properly shall be cause for the suspension of asphalt concrete production. In order to achieve a continuous operation, the speed of the paving machine shall be coordinated with the hot mix plant and transport units.

If the asphalt concrete is dumped from the hauling vehicles directly into the paving machine, care shall be taken to avoid jarring the machine or moving it out of alignment. No vertical load shall be exerted on the paving machine by the truck.

If asphalt concrete is dumped upon the surface being paved and subsequently loaded in the paving machine, the loading equipment shall be self-supporting and shall not exert any vertical load on the paving machine. Substantially all of the asphalt concrete shall be picked up and loaded into the paving machine.

Self-propelled paving machines shall spread the mixture without segregation or tearing, true to line, grade and crown indicated on the Project plans. Pavers shall be equipped with hoppers and augers that will distribute the mixture uniformly in front of an adjustable floating screed. The raising of the hopper wings must be minimized and the paving machine will not be operated when in an empty condition.

Screeds shall include any strike-off device operated by tamping or vibrating action which is effective, without tearing, shoving or gouging the mixture and which produces a course with a uniform texture and density for the full width being paved. Screeds shall be adjustable as to height and crown and shall be equipped with a controlled heating device for use when required. In the case of the screed, auger extensions and vibrators shall be installed wherever the screed is extended more than one (1) foot beyond the end of the base auger or auger extension. However, when placing material against an extremely uneven curb or edge over a short distance, the Engineer may waive the auger extensions and vibrators.

At any place not accessible to the roller, the mixture shall be thoroughly compacted with tampers to provide a uniform and smooth layer over the entire area compacted in this manner.

321.8.2 Joints: Transverse joints, before a surface course is placed in contact with a cold transverse construction joint, the cold existing asphalt concrete shall be trimmed to a vertical face for its full depth ~~and~~ exposing a fresh face. The fresh face shall be tack coated prior to placement of the new asphalt concrete. After placement and finishing the new asphalt concrete, both sides of the joint shall be dense and the joint shall be smooth and tight. The surface in the area of the joint shall not deviate more than 1/4 inch from a 12-foot straightedge, when tested with the straightedge placed across the joint, parallel to the centerline.

Longitudinal joints of each asphalt course shall be staggered a minimum of 6 inches with relation to the longitudinal joint of the immediate underlying course's cold ~~transverse~~ longitudinal construction joint~~,~~.

Longitudinal joints with ~~the cold~~ existing or cold (more than 32 hours old) asphalt concrete shall require the existing pavement to be trimmed to a vertical face for its full depth ~~and~~ exposing a fresh face. The fresh face shall be tacked prior to placement of the adjacent course. Longitudinal joints with an existing asphalt pavement that is less than 32 hours old that has had its edge protected from damage may place adjacent new asphalt concrete after applying the required tack coat. After placement and finishing ~~the new asphalt concrete~~of longitudinal joints, both sides of the joint shall be dense and the joint shall be smooth and tight. The surface in the area of the joint shall not deviate more than ¼ inch from a 12-foot straightedge, when tested with the straightedge placed across the joint~~, parallel to the centerline~~ in any direction. ~~The joint will be tack coated if required by the Engineer.~~

321.8.3 Asphalt Leveling Course: A leveling course shall be used when specified, or as directed in writing by the Engineer, to bring existing pavement to a uniform grade prior to placing an overlay or other course. If a leveling course is being applied on an Asphalt surface, a tack coat shall be applied. The compaction requirements contained in Section 321.10 do not apply to leveling courses.

321.8.4 Compaction; Asphalt Base Course and Surface Course: It is the contractor's responsibility to perform ~~any desired~~ Quality Control monitoring and/or testing during compaction operations to achieve the required compaction. The temperature of the asphalt concrete immediately behind the laydown machine shall meet the minimum requirements of Table 321-2. A probe type electronic thermometer with a current calibration sticker attached will be used to measure the temperature of the asphalt concrete mixture. When measuring the temperature of the mat, the probe shall be inserted at mid-depth and as horizontal as possible to the mat. The minimum temperatures in Table 321-2 do not guarantee that the asphalt mix will be compacted to the required density. The contractor is responsible to achieve the required compaction.

TABLE 321-2

MINIMUM ASPHALT CONCRETE PLACEMENT TEMPERATURE

Base [1] Temp (°F)	Mat Thickness (inches)					
	1/2	3/4	1	1 1/2	2	3 and greater
40 – 50	---	---	310	300	285	275
50 – 60	---	310	300	295	280	270
60 – 70	310	300	290	285	275	265
70 – 80	300	290	285	280	270	265
80 – 90	290	280	270	270	265	260
+90	280	275	265	265	260	255

(1) Base on which mix is to be placed

Asphalt compaction equipment shall be of sufficient size and weight to accomplish the required compaction. All compaction equipment shall be operated and maintained in accordance with the manufacturer's recommendations and the project requirements. During the rolling operation, the speed of the roller shall not exceed 3 miles per hour, unless otherwise approved by the Engineer.

Pneumatic tired compactors shall be equipped with skirt-type devices mounted around the tires so that the temperature of the tires will be maintained during the compaction process.

The Engineer will determine the acceptability of the pavement compaction in accordance with Section 321.10.

321.8.5 Smoothness: The completed surfacing shall be thoroughly compacted, smooth and true to grade and cross-section and free from ruts, humps, depressions or irregularities. An acceptable surface shall not vary more than one-fourth (¼) inch from the lower edge of a 12-foot straightedge when the straightedge is placed parallel to the centerline of the roadway.

321.8.6 Asphalt Concrete Overlay: Asphalt concrete overlay consists of the placing and compacting plant mix asphalt concrete over existing pavement. The mix design and thickness of the overlay shall be as shown on the plans or as specified in the special provisions.

Except when the existing asphalt surface is to be preheated and remixed, pavement surfaces shall be prepared as follows:

(a) Areas designated for pavement repair by the contract documents (which may include severely raveled areas, severely cracked areas, over-asphalted areas, and other defects) shall be cut out and replaced. Pavement repairs shall be completed and approved before placing asphalt concrete overlay.

(b) Before placing asphalt concrete overlay, milling shall be done as shown on the plans or specified in the special provisions and shall be in accordance with Section 317.

(c) After pavement repairs and milling have been completed the entire surface shall be cleaned with a power broom.

(d) After surfaces have been prepared to the satisfaction of the Engineer, they shall receive a tack coat per Section 321.4. Traffic will not be permitted to travel over surfaces which have received a tack coat, except when tack coat is applied to milled surfaces in compliance with Section 317.2 for dust control purposes. When the overlay is to extend onto a concrete gutter, the gutter shall be thoroughly cleaned of loose dust and cement particles and shall be tack coated.

Asphalt concrete overlay shall be placed as specified in Section 321.8.1 and compacted as specified in Section 321.8.4. The surface smoothness shall meet the tolerances specified in Section 321.8.5.

Frames and covers of manholes, survey monuments, valve boxes, clean-outs and other existing structures shall be adjusted in accordance with Section 345 to set flush with the finished surface of the new pavement. During adjustment if pavement or base materials are removed or disturbed, they shall be replaced with approved materials installed in a manner acceptable to the Engineer.

On roads without curb and gutter, the existing unpaved shoulder elevation shall be adjusted by the Contractor to match the elevation at the edge of the new overlay and slope away from the new pavement surface at a rate that the existing quantity of shoulder material will allow. Shoulder material shall be compacted to a minimum of 95% of maximum density, determined in accordance with Section 301.3. Shoulder adjustment to match the new pavement surface elevation shall not be measured. The cost of shoulder adjustment shall be included in the price paid for the asphalt concrete overlay or other related pay items. When the Engineer determines an insufficient amount of material is available for shoulder adjustment, the Engineer may require the Contractor to provide additional material. Acceptable material for shoulders includes the existing shoulder material, millings, untreated base materials, or a

granular material approved by the Engineer. Engineer requested imported material for shoulder adjustment is not included in the price paid for the asphalt concrete overlay.

321.8.7 Pavement Fabric Interlayer: Pavement fabric interlayer shall be used only when specified on the plans or in the specifications.

Pavement fabric interlayer shall be in accordance with Table 796-1 and be the class designated on the plans or in the specifications.

Asphalt binder coat used to bond the fabric to the pavement shall be paving asphalt PG 70-10 asphalt cement conforming to the requirements of Section 711. The application and distributing equipment for the asphalt binder shall conform to the requirements of Section 330. The asphalt binder coat shall be uniformly spray applied to the prepared pavement surface at the rate of 0.20 gallons per square yard for Class B fabric or at the rate of 0.25 gallons per square yard for Class A fabric. Some underlying surfaces may require a higher or lower application rate. A test strip may be necessary to determine the proper application rate. The width of liquid asphalt cement application shall be the fabric width, plus six inches.

Neither the asphalt binder coat or fabric interlayer shall be placed when weather conditions, in the opinion of the Engineer, are not suitable. The asphalt binder and fabric interlayer shall only be placed when the pavement is dry, the ambient air temperature is 50 degrees F and rising, and pavement temperature is 40 degrees F and rising.

Equipment for placing the fabric shall be mechanized and capable of handling full rolls of fabric. The equipment shall be able to lay the fabric smoothly to maximize pavement contact and remove air bubbles. Stiff bristle brooms shall be used to smooth the fabric. The equipment used to place the fabric shall be in good working order and is subject to approval by the Engineer.

Pavement fabric interlayer shall not be placed if the in-place binder is hotter than 325 degrees F or has cooled to 180 degrees F or below (as determined by non-contact thermometer).

Pavement fabric interlayer shall be placed onto the asphaltic binder with the heat bonded side up with a minimum amount of wrinkling or folding. Remaining wrinkles or folds 1-inch and larger shall be removed or slit and shingle-lapped in the direction of paving. Burning or torching of wrinkles is not allowed. Fabric shall overlap three to six inches to insure full closure of the joint. Transverse joints shall be shingle-lapped in the direction of paving to prevent edge pickup by the paver. A second application of hand-placed asphalt binder may be required at laps and repairs as determined by the Engineer to ensure proper binding of the narrow double fabric layer.

All areas where fabric has been placed shall be paved with asphaltic concrete during the same workshift. Placement of the asphaltic concrete shall closely follow fabric lay down. The temperature of the asphaltic concrete immediately behind the laydown machine shall not exceed 325 degrees F. In the event that the asphalt binder coat bleeds through the fabric causing construction problems before the overlay is placed, the affected areas shall be sanded with a sand blotter in compliance with Section 333. Excess sand shall be removed before beginning the paving operation. In the event of rainfall prior to the placement of the asphaltic concrete, the fabric shall be allowed to dry before the asphalt concrete is placed.

Turning of the paving machine or of other vehicles on the fabric shall be gradual and kept to a minimum to avoid damage to the fabric. Should equipment tires stick to the fabric during pavement operations, small quantities of paving asphalt concrete shall be broadcast on the fabric to prevent pick-up. Decrease of binder rate in order to minimize pick-up on tires is not allowed.

321.8.8 Thickened Edge: When the depth of the thickened edge extends four inches or more below the bottom of the asphalt pavement, the portion of the thickened edge extending below the asphalt pavement shall be placed and compacted prior to placement of the asphalt pavement. Placement of tack coat on the surface of the compacted thickened edge asphalt may be omitted when additional asphalt pavement is placed on the same day and the Engineer agrees that the surface of the thickened edge asphalt has remained clean.

When the depth of the thickened edge extends less than four inches below the bottom of the asphalt pavement, the

portion below the asphalt pavement may be placed and compacted with the asphalt pavement in a single operation.

321.8.9 Safety Edge: The finished safety edge slope shall be planar forming a 30° ± 5° angle with the adjacent roadway surface and extend a minimum of five inches (5") below the roadway pavement's finished surface.

The safety edge shall be constructed with the top or final paving lift of a new pavement or overlay using a device that is mounted to or is a part of the screed portion of the laydown machine. The safety edge device shall be capable of constraining the asphalt concrete material to increase density of the extruded profile by reducing the volume. A conventional single strike-off plate is not acceptable. Compaction obtained from the extruded safety edge shall be acceptable when the extruded shape conforms to the specified shape.

During laydown operations if the extruded safety edge does not conform to the specified shape, the Contractor shall take immediate actions to correct the deficiency and to repair all non-compliant sections of safety edge. The Contractor shall stop paving operations until corrections to the laydown operation have been made and resumption of paving is approved by the Engineer or his designated representative.

321.8.10 Protection for Asphalt Base Course: Arterial roadway traffic shall not be allowed on a new asphalt base course that is less than five inches (5") in thickness without the written consent of the Engineer.

321.9 QUALITY CONTROL:

It is the contractor's responsibility to perform Quality Control monitoring and/or testing during asphalt concrete production to achieve the required compaction and to perform Quality Control monitoring and/or testing during asphalt concrete production to achieve the required mix properties. The Engineer may obtain samples of any portion of any material at any point of the operations for his own use. Also, the Engineer may order the use of any drying, proportioning and mixing equipment or the handling of any material discontinued which, in his/her opinion, fails to produce a satisfactory mixture.

The asphalt concrete produced shall conform to the requirements of the production tolerances established in section 321.10. When the asphalt concrete does not conform to the production tolerances, it shall be reported to the Engineer, and corrective quality control measures shall be implemented, or production shall cease immediately at no additional cost to the contracting Agency~~ or Engineer~~.

Requests for Referee Testing as described in 321.11 will only be considered based on quality control test results performed by a laboratory accredited by the AASHTO Accreditation Program (AAP) for the tests being performed or a laboratory listed in the current ADOT Directory of Approved Materials Testing Laboratories for the set of tests in question. The laboratory shall use properly certified technicians in accordance with ASTM D3666, Section 7 (Personnel Qualifications).

321.10 ACCEPTANCE:

321.10.1 Acceptance Criteria: ~~Unless otherwise specified, a~~Asphalt concrete will be divided into lots for the purpose of acceptance. A lot shall be ~~considered to be~~ one day's production. ~~When the quantity of asphalt concrete placed in a day exceeds 500 tons but is less than 2000 tons, the~~Each lot shall be divided into sublots of 500 ton ~~sublots~~ or fraction thereof. ~~Where the quantity of asphalt concrete placed in a day exceeds 2000 tons, the day's production will be divided into four (4) approximately equal sublots. A minimum of one sample will be obtained from each lot.~~ Tests used to determine acceptance will be performed by ~~the Engineer or~~ a laboratory ~~employed by the Engineer. In either case the laboratory shall be~~ accredited by the AASHTO Accreditation Program (AAP)~~,~~ for the tests being performed. The laboratory shall be employed by the Contracting Agency. The acceptance laboratory will take representative samples of the asphalt concrete from each sublot to allow for gradation, binder content, air voids, pavement thickness and compaction of base and surface course. Each sublot will be accepted based ~~up~~on the test data from the sample(s) from that sublot. All acceptance samples shall be taken using random locations or times designated by the Engineer in accordance with ASTM D3665.

321.10.2 Gradation, Binder Content and Air Voids: The acceptance laboratory will take a sample of the asphalt concrete in accordance with the requirements of Section 2 or 4 of Arizona Test Methods 104 or AASHTO T-168

from each sublot. The minimum weight of the sample shall be 45 pounds. Asphalt binder content and gradation shall be determined in accordance with AASHTO T-308 using the ignition furnace for each sublot. The acceptance laboratory is responsible for obtaining the necessary materials and performing an ignition furnace calibration as outlined in AASHTO T-308 for each asphalt concrete mixture utilized on the project. The correction factor used for each test shall be clearly indicated on the report. The bulk density for Marshall Mix designs shall be tested in accordance with AASHTO T-245. The bulk density for Gyratory mix designs shall be determined in accordance with AASHTO T-312. The maximum theoretical density shall be determined in accordance with the requirements of AASHTO T-209 including fan drying per AASHTO T209 Section 15. Effective voids of the laboratory compacted specimens will be determined at a minimum of once per lot in accordance with the requirements of AASHTO T-269. Should the testing for effective air voids not meet the "Full Payment" or "No Corrective Action" requirements of Table 321-5, additional testing for laboratory air voids on the remaining sublots will be performed as necessary to determine the extent of the deficiency. Acceptance testing results will be furnished to the contractor and the supplier within five working days of receipt of samples by the acceptance laboratory.

During production, the allowable deviations from the mix design gradation targets are listed in the tables below. The allowable production tolerances may fall outside of the mix design gradation bands.

TABLE 321-3A
GRADATION ACCEPTANCE LIMITS FOR MARSHALL MIXES

Sieve Size	3/8 inch Mix	1/2 inch Mix	3/4 inch Mix	Base Mix
1 inch	---	---	---	±7%
3/4 inch	---	---	±7%	±6%
1/2 inch	---	±7%	---	---
3/8 inch	±7%	±6%	±6%	±6%
No. 8	±6%	±6%	±6%	±6%
No. 40	±4%	±4%	±4%	±4%
No. 200	±2%	±2%	±2%	±2%

TABLE 321-3B
GRADATION ACCEPTANCE LIMITS FOR GYRATORY MIXES

Sieve Size	3/8 inch Mix	1/2 inch Mix	3/4 inch Mix
3/4 inch	---	---	±7%
1/2 inch	---	±7%	±6%
3/8 inch	±7%	±6%	---
No. 8	±6%	±6%	±6%
No. 40	±4%	±4%	±4%
No. 200	±2%	±2%	±2%

If the results from a single acceptance sample fall outside of the acceptance limits in Table 321-3A or 321-3B as applicable, a second sample shall be taken and if the second acceptance sample is also outside of the acceptance limits the Contractor shall cease production of asphalt concrete. Production shall not begin again until calibration test results verify that adjustments made to materials or proportions yield a gradation that falls within acceptance limits in Table 321-3A or 321-3B as applicable.

If the asphalt binder content is within ± 0.40% of the mix design target value, the asphalt concrete will be paid for at the contract unit price. If the asphalt binder content deviates by more than ± 0.40% from the mix design target value, the deficient area will be evaluated within the sublot by coring at maximum intervals of 100 feet from the deficient sample. The asphalt content of the original deficient sample will be averaged with the asphalt binder content of the cores taken for re-evaluation to determine compliance with the acceptance requirements. If the resulting average of the asphalt binder content deviates by more than ± 0.40% from the mix design target value, then Table 321-4 shall

apply to the sublot. Additional cores may be required to define the limits of the deficient area, and shall not be used for re-evaluating acceptance.

TABLE 321-4		
ASPHALT BINDER CONTENT ACCEPTANCE AND PENALTIES		
Deviation from that permitted	When the contracting agency is the owner: Payment Reduction ($ per ton of asphalt concrete)	When the contracting agency is not the owner (i.e. permits): Corrective Action
Over 0.2% above that permitted	Removal* or EA	Removal* or EA
Over 0.1% to 0.2% above that permitted	$6.00	EA
Over 0.0% to0.1% above that permitted	$2.00	EA
Within permitted range	Full Payment	No Corrective Action
Over 0.0% to0.1% below that permitted	$2.00	EA
Over 0.1% to 0.2% below that permitted	$6.00	EA
Over 0.2% below that permitted	Removal* or EA	Removal* or EA

NOTES: *The Contractor shall remove and replace the entire sublot that is deficient.
EA = Engineering Analysis per Section 321.10.6

If the laboratory air voids fall within a range of 2.8% to 6.2%, the asphalt concrete will be paid for at the contract unit price. If the laboratory air voids are outside of this range, the deficient area will be evaluated within the sublot by coring at maximum intervals of 100 feet from the deficient sample. The laboratory air voids of the original deficient sample will be averaged with the laboratory air voids obtained from each of the cores taken for re-evaluation to determine compliance with the acceptance requirements. If the resulting average of the laboratory air voids is outside the indicated range, then Table 321-5 shall apply to the sublot. Additional cores may be required to define the limits of the deficient area, and shall not be used for re-evaluating acceptance.

TABLE 321-5		
LABORATORY VOIDS ACCEPTANCE AND PENALTIES		
Laboratory Air Voids (Measured at N_{des} or 75 blows as applicable)	When the contracting agency is the owner: Payment Reduction ($ per ton of asphalt concrete)	When the contracting agency is not the owner (i.e. permits): Corrective Action
Less than 1.5%	Removal* or EA	Removal* or EA
1.5-2.0%	$5.00	EA
2.1-2.7%	$2.00	EA
2.8-6.2%	Full Payment	No Corrective Action
6.3-6.9%	$2.00	EA
7.0-8.0%	$5.00	EA
Greater than 8.0%	Removal* or EA	Removal* or EA

NOTES: *The Contractor shall remove and replace the entire sublot that is deficient
EA = Engineering Analysis per Section 321.10.6
Removal for In-place Air Voids Greater than 11.0% is not eligible for Section 321.10.6.

If an agency or Engineer is purchasing asphalt concrete directly from a commercial material supplier, the agency or Engineer will use Section 321.10, and specifically Tables 321-3A or 321-3B as applicable, 321-4 and 321-5 from Section 321.10, when determining the acceptance of the asphalt concrete with the material supplier.

321.10.3 Surface Testing: If directed by the Engineer surface drainage test shall be performed. The completed surfacing shall be thoroughly compacted, smooth and true to grade and cross-section and free from ruts, humps, depressions or irregularities. An acceptable surface shall not vary more than 1/4 inch from the lower edge of a 12-foot straightedge when the straightedge is placed parallel to the centerline of the roadway. The straightedge shall be furnished by the contractor and shall be acceptable to the Engineer.

All streets shall be water tested for drainage in the presence of the Engineer or designated representative before final acceptance. Any areas not draining properly shall be corrected to the Engineer's satisfaction at the Contractor's expense. Water for this testing shall be provided and paid for by the Contractor.

When deviations in excess of the above tolerance are found, humps or depressions shall be corrected to meet the specified tolerance, or shall be cut out along neat straight lines and replaced with fresh hot mixture and thoroughly compacted to conform with and bond to the surrounding area. When pavement is removed, the limits of removal shall be adjusted to prevent full depth longitudinal joints from being located within a lane wheel path. The lane wheel path is the entire lane width except the area within one foot of a lane line stripe and except the center two feet of the travel lane. The limits of full depth pavement removal shall be extended to the edge of asphalt pavement if the removal limit is within forty-eight inches (48") of the asphalt pavement edge. Materials and work necessary to correct ~~such deviations~~deficiencies shall be at no additional cost to the Contracting Agency.

321.10.4 Asphalt Pavement Thickness: Asphalt Pavement thickness will be determined from cores secured from each sublot for this purpose. Such cores will be taken and measured by the Asphalt Concrete Coring Method. This method can be found at in Section 321.14. Each core location will be patched by the party responsible for the testing.

If the pavement thickness is deficient from the target thickness by 0.25 inches or less, it will be paid for at the contract unit price.

If the pavement thickness deficiency is greater than 0.25 inches and the contracting agency is not the owner (i.e. permits) the following steps will apply:

(1) If the thickness deficiency of the pavement exceeds 0.25 inch, the limits of the deficient area will be evaluated by coring at maximum intervals of 100 feet from the deficient core. The thicknesses of the original deficient core will be averaged with the thicknesses of the cores taken from 100 feet on each side of it to determine compliance with the acceptance requirements. If the resulting average thickness deficiency is greater than 0.25 inch, additional cores may be required to define the limits of the deficient area, and shall not be used for re-evaluating acceptance.

(2) If the pavement thickness from step one above deviates from the target thickness by more than 0.25 inch but not more than 0.50 inch, corrective action will be required. This corrective action will consist of application of a Type II slurry seal coat in accordance to Section 715. The Contractor may present an engineering analysis outlining other proposed remedial measures for the consideration of the Engineer. The Engineer will review the engineering analysis and decide within 30 working days whether to accept the proposed remedial measures.

(3) If the pavement thickness from step one above deviates from the target thickness by more than 0.50 inch, corrective action will be required. The deficient area ~~will~~ shall be overlaid with no less than a 1 inch thick lift, for the full width of the pavement to meet or exceed the designed thickness, with ~~the~~ appropriate end and edge milling, ~~with~~ using a mixture approved by the Engineer. The Contractor may present an engineering analysis outlining other proposed remedial measures for the Engineer's consideration. The Engineer will review the engineering analysis and decide within 10 working days whether to accept the proposed remedial measures. If the Engineer chooses to reject the engineering analysis, the indicated overlay will be constructed by the Contractor at no additional cost to the Owner.

If the Contracting Agency is the owner and the pavement thickness deficiency is greater than 0.25 inches but less than 0.50 inches~~and the contracting agency is the owner,~~ Table 321-6 will apply. If the pavement thickness deficiency is greater than 0.5 inches the deficient area shall be overlaid with no less than a 1-inch thick lift for the full width of the pavement to meet or exceed the designed thickness using an asphalt mixture approved by the Engineer. The Contractor shall provide appropriate end and edge milling. The overlay and milling shall be accomplished by the Contractor at no additional cost to the Contracting Agency.

TABLE 321-6
ASPHALT PAVEMENT THICKNESS PAYMENT REDUCTION
For Thickness Deficiency of More Than 0.25 inches and less than 0.50 inches

Specified Pavement Thickness	Reduction in Payment or Corrective Action
Less than 1.5 inches	50%
1.50 inches to 1.99 inches	33%
2.00 inches to 2.49 inches	25%
2.50 inches to 2.99 inches	20%
3.00 inches and over	17%

321.10.5 Density:

321.10.5.1 Pavement 1-1/2 Inches or Less in Nominal Thickness:

Compaction shall consist of a "Rolling Method Procedure" using an established sequence of coverage with specified types of compactors. A pass shall be defined as one movement of a compactor in either direction. Coverage shall be the number of passes as are necessary to cover the entire width being paved.

The rolling sequence, the type of compactor to be used, and the number of coverages required shall be as shown in Table 321-7.

TABLE 321-7				
ROLLING SEQUENCE FOR LIFT THICKNESS 1½" OR LESS				
Rolling Sequence	Type of Compactor		No. of Coverages	
	Option No. 1	Option No. 2	Option No.1	Option No. 2
Initial	Static Steel	Vibrating Steel	1	1
Intermediate	Pneumatic Tired	Vibrating Steel	4	2- 4*
Finish	Static Steel	Static Steel	1-3	1-3
* Based on the roller pattern which exhibits the best performance.				

The Contractor shall select the option for compaction and, when pneumatic-tired compactors are used will designate the tire pressure. Steel wheel compactors shall not be used in the vibratory mode for courses of one inch or less in thickness nor when the temperature of the asphaltic concrete falls below 180 degree F. Initial and intermediate compaction shall be accomplished before the temperature of the asphaltic concrete falls below 200 degree F.

Compaction will be deemed to be acceptable on the condition that the asphaltic concrete is compacted using the type of compactors specified, ballasted and operated as specified, and with the number of coverages of the compactors as specified.

321.10.5.2 Pavement Greater than 1-1/2 Inches in Nominal Thickness:

Achieving the required compaction is the responsibility of the contractor. The number and types of rollers is the contractor's responsibility and shall be sufficient to meet these requirements.

In-place air voids shall be determined in accordance with AASHTO T-269 utilizing cores taken from the finished pavement. The maximum theoretical density used in the determination of in-place air voids will be the average value from the acceptance samples determined for the Lot as outlined in 321.10.1.

The Engineer will designate one random test location for each sublot and the acceptance laboratory will obtain one core from that location. Regardless of sublot quantities or boundaries, a minimum of one core will be obtained per residential street and a minimum of one core per travel lane for collector and arterial streets. The outside one foot of each pass of the pavement course or any unconfined edge will be excluded from testing. The Engineer may exclude areas from the compaction lot that are not accessible by normal compaction equipment.

The Contractor will provide the traffic control to facilitate any coring operations necessary for compaction acceptance.

Cores will be taken per the Asphalt Concrete Coring Method. This method can be found in Section 321.14. Acceptance testing results will be furnished to the contractor within five working days of receipt of samples by the acceptance laboratory.

If the pavement density has in-place voids of 8.0% or less, the asphalt concrete will be paid for at the contract unit price. If the pavement density has in-place voids greater than 8.0%, the deficient area will be evaluated within the sublot by coring at maximum intervals of 100 feet from the deficient core(s). If both cores in a sublot are deficient, 3 to 4 additional cores may be necessary to re-evaluate acceptance. The in-place voids of all the original core(s), whether deficient or acceptable, will be averaged with the in-place voids of the cores taken for re-evaluation to determine compliance with the acceptance requirements. If the average of the in-place voids is greater than 8.0% then Table 321-8 shall apply to the sublot. Additional cores may be required to define the limits of the deficient area, and shall not be used for re-evaluating acceptance.

TABLE 321-8		
PAVEMENT DENSITY PENALTIES		
Limits of In-place Air Voids for design lift thicknesses 1.5 inches and greater	When the contracting agency is the owner: Payment Reduction ($ per ton of asphalt concrete)	When the contracting agency is not the owner (i.e. permits): Corrective Action
Below 3.0%	Removal* or EA	Removal* or EA
3.0% to below 4.0%	$10.00	EA and Type II Surry Seal
4.0% to 8.0%	Full Payment	No Corrective Action
Greater than 8.0% to less than 9.0%	$6.00	EA
9.0% to 10.0%	$10.00	EA and Type II Surry Seal
Greater than 10.0%	Removal* or EA	Removal* or EA

NOTES: *The Contractor shall remove and replace the entire sublot that is deficient.
EA = Engineering Analysis per Section 321.10.6
Removal for In-place Air Voids greater than 11.0% is not eligible for Section 321.10.6.

321.10.6 Engineering Analysis (EA): Within 10 working days after receiving notice that a lot or sublot of asphalt concrete is deficient and is found to fall within the "Removal or EA" band per Table(s) 321-4, 321-5, and/or 321-8 the contractor may submit a written proposal (Engineering Analysis) to accept the material in place at the applicable penalties along with possible remediation(s) listed in the "Removal or EA" category. Engineering Analysis can also be proposed for non-removal categories of "Corrective actions" when the contracting agency is not the owner (i.e. permits).

The Engineering Analysis shall contain an analysis of the anticipated performance of the asphalt concrete if left in place. The Engineering Analysis shall also detail the effect of any proposed corrective action to the material(s) in place as it relates to the in-place material's performance. The Engineering Analysis shall be performed by a professional engineer experienced in asphalt concrete testing and mix designs.

If ~~the~~ a lot or sublot is ~~submitted~~ accepted for referee testing ~~by~~ and found to be deficient, the contractor~~,~~ shall have ~~the~~ ten working days ~~allowed~~ to ~~prepare~~ submit an engineering analysis ~~will~~ beginning upon notification of referee test results.

When an Engineering Analysis recommends that a specific lot or sublot should not be removed, the Engineering Analysis will recommend that the following penalties (Table 321-9) be paid when the contracting agency is the owner, for the specific criteria being reviewed by the EA.

TABLE 321-9		
ENGINEERING ANALYSIS PENALTIES for REMOVAL* LOTS/SUBLOTS LEFT IN-PLACE		
Acceptance Criteria	**Acceptance Limits**	**Penalty When Contracting Agency is the Owner ($/Ton)**
Asphalt Binder Content	Over 0.2% points from that Permitted	$9.00
Laboratory Air Voids (Measured at N_{des} or 75 blows as applicable)	Less than 1.5% or Greater Than 8.0%	$3.75
Limits of In-place Air Voids	10.1% to 11.0%	$9.00

Within 15 working days, the Engineer will determine whether or not to accept the contractor's proposed Engineering Analysis.

321.11 REFEREE:

If the Contractor has reason to question the validity of any of the acceptance test results, the Contractor may request that the Engineer consider referee tests for final acceptance. ~~In the event the contractor elects to question the acceptance test results for either asphalt binder content, laboratory air voids, density or a combination thereof for a sublot, the Contractor may make a written request for additional testing of that sublot.~~ Any request for referee testing must describe the contractor's reasons for questioning the validity of the original acceptance test results and must clearly describe which set of acceptance tests are in question. The engineer may either accept or reject the request for referee testing. When referee testing is accepted, the~~The~~ Contractor (at the Contractors own expense) will engage an independent laboratory ~~(at the Contractors own expense) who is~~ accredited by the AAP or a laboratory listed in the current ADOT Directory of Approved Materials Testing Laboratories as appropriate ~~in all of~~for the acceptance tests that are being questioned~~ methods~~. ~~The independent laboratory shall be~~ The independent referee laboratory shall use properly certified technicians in accordance with ASTM D3666, Section 7 (Personnel Qualifications). ~~acceptable to the Engineer and~~ For the set of test results in question the referee laboratory shall perform a new set of acceptance tests (as required by Section 321.10 representing the area for the set of tests in question)~~. The results of these determinations will be binding on both the contractor and the agency.~~

These tests may include asphalt binder content, aggregate gradation, Marshall or Gyratory unit weight, maximum theoretical unit weight, laboratory air voids and in-place air voids (compaction). Samples for referee testing shall come from representative samples obtained from the completed pavement, as directed by the Engineer.

The number of samples taken will be the same as specified in Section 321.10. The independent laboratory shall compile the test results and transmit them to both the Engineer and the contractor. The independent laboratory shall include a report sealed and signed by an Engineer registered in the State of Arizona, who is experienced in asphalt concrete testing and mix design development. The signed report shall give an opinion that the material evaluated does or does not comply with project specifications, shall clearly describe any deficiencies, and the results will be binding between all parties.

321.12 MEASUREMENT:

Asphalt concrete pavement will be measured by the ton, or by the square yard, for the mixture actually used as allowed above, which shall include the required quantities of mineral aggregates, asphalt binder, and mineral admixture. Measurement shall include any tonnage used to construct intersections, roadways, streets, or other miscellaneous surfaces indicated on the plans or as directed by the Engineer.

321.13 PAYMENT:

The asphalt concrete measured as provided above will be paid for at the contract price per ton or square yard, as adjusted per Section 321.10, which price shall be full compensation for the item complete, as herein described and

specified.

Payment for tack coat will be by the ton diluted, based on the rate of application, as directed by the Engineer.

No payment will be made for any overrun in quantity of asphalt concrete in excess of 10 percent based on actual field measurement of area covered, design thickness, and the mix design unit weight. The calculations and payment for overrun will be by individual pay item. To compensate or adjust for a thickness deficiency in an underlying asphalt concrete course, the Engineer may authorize a quantity increase in excess of 10 percent for a subsequent asphalt concrete course. In such cases, the quantity in excess of 10 percent will be paid for at the lowest unit price.

Agency required repairs of existing pavement prior to roadway overlay operations will be paid for as a separate pay item.

Except as otherwise specified, no separate payment will be made for work necessary to construct miscellaneous items or surfaces of asphalt concrete.

321.14 ASPHALT CORE METHOD: Core Drilling of Hot Mix Asphalt (HMA) for Specimens of 4" or 6" diameter

321.14.1 Scope: This method is to establish a consistent method of the use of a diamond bit core to recover specimens of 4 or 6 inch diameter for laboratory analysis and testing. The method will require the use of: water, ice (bagged or other suitable type), dry ice, and a water-soap solution to be utilized when coring asphalt rubber concrete. Individuals doing the specimen recovery should be observing all safety regulations from the equipment manufacturer as well as the required job site safety requirements for actions, and required personal protective equipment.

321.14.2 Core Drilling Device: The core drilling device will be powered by an electrical motor, or by an acceptable gasoline engine. Either device used shall be capable of applying enough effective rotational velocity to secure a drilled specimen. The specimen shall be cored perpendicularly to the surface of pavement, and that the sides of the core are cut in a manner to minimize sample distortion or damage. The machinery utilized for the procedure shall be on a mounted base, have a geared column and carriage that will permit the application of variable pressure to the core head and carriage throughout the entire drilling operation. The carriage and column apparatus shall be securely attached to the base of the apparatus; and the base will be secured with a mechanical fastener or held in place by the body weight of the operator. The core drilling apparatus shall be equipped with a water spindle to allow water to be introduced inside of the drill stem while operating. The cutting edge of the core drill bit shall be of hardened steel or other suitable material with embedded diamond chips in the cutting surface. The core barrel shall be of sufficient diameter to secure a specimen that is a minimum of four or six inches or whichever is prescribed for necessary testing. The core barrel shall not be missing more than one of the teeth used for cutting; if so it shall be discarded and another barrel shall be used. The core barrel shall also be a minimum of two inches longer than the anticipated depth of pavement in accordance with project paving plans.

321.14.3 Accessory Equipment: A sufficient supply of ice and dry ice shall be provided to sufficiently cool the pavement prior to securing the samples from the designated areas in the pavement. The ice should also be used to adjust the temperature of the water used to cool the core bit. A water supply (usually a plastic 35 – 55 gal drum) with sufficient hose to introduce the water into and through the spindle of the coring device by gravity feed. The drum should be white or light in color to minimize excessive thermal heating of the water (*for coring of asphalt rubber cores see Note 1*). At no time shall the water utilized in the coring operation exceed 65° F during the coring operation. Ice shall be utilized to ensure the temperature control of the water being introduced during the cutting operation. An ice chest or other suitably insulated container that can maintain a temperature of less than 70° F shall be used to secure the specimens during transport. The container will be equipped with flat shelving that will support the drilled cores throughout the entire specimen dimension during transport back to the testing facility.

Miscellaneous hand tools to remove the drilled specimen from the drill hole or the core barrel taking great care in not disturbing the specimen more than necessary (refer to fig. 1 in ASTM D5361-05).

321.14.4 Process: The pavement surface at the time of coring shall not exceed a temperature of 90° F; the pavement

shall be conditioned with ice or dry ice to ensure that this requirement is met. Immediately after it has been ensured that the pavement has dropped to the required temperature, core drilling shall begin. The operator will then apply an even and continuous pressure (Note 2) to penetrate through the full depth of the pavement. The operator will concurrently ensure that enough water is moving over the core surface as to adequately remove any and all cuttings that could damage the drilled core. After the pavement thickness has been penetrated the core shall be carefully removed from either the drill hole or the core barrel and be immediately transferred to an ice chest or other suitable container. Each individual core shall be placed on a shelf in the cooler with the exposed side of the specimen facing down, or the "top side" down. If the specimen is a two lift core, the only acceptable means of separating lifts is with a power or other acceptable wet saw type of equipment (conforming to ASTM D5361-05); however, at no time shall cores be split using a mallet and screwdriver or metal straight edge when being tested for bulk density. Perpendicularity of the specimen shall be checked in the field after the specimen has been extracted from the surface. The core operator shall hold the core up to eye level and place the core top side down in a "speed square" or small carpenters square. The specimen placed in the square shall not depart from perpendicular to the axis more than 0.5^{o} (approximately equivalent to 1/16 of an inch in 6 inches). If the specimen is outside of this distance from square it shall be discarded in the field and another sample cored that falls within tolerance. The cores upon arriving at the laboratory for testing shall be carefully cleaned and measured for thickness in accordance with ASTM D3549. A speed square shall be utilized to measure perpendicularity as compared to a 90° degree angle and shall not depart from perpendicular to the axis more than 0.5^{o} (approximately equivalent to 1/16 of an inch in 6 inches). All remaining testing shall be done within the parameters of the current project and / or agency required specification.

~~***- End of Section -***~~

*Note 1 – It should be noted that when the material to be cored is a rubberized asphalt mixture a wetting agent such as liquid dish soap shall be added to the water barrel to hinder the material from sticking or allowing the binder to spread during coring.

*Note 2 – This refers to pressure exerted on the core barrel and machine during the coring process. Too much pressure can cause damage to the core barrel and the motor; and too little pressure can cause a glazing of the diamonds, reducing cutting efficiency and premature wear of the barrel

- End of Section -

PLACEMENT AND CONSTRUCTION OF ASPHALT CONCRETE PAVEMENT

321.1 DESCRIPTION:

This section is to provide specifications for furnishing all materials, mixing at a plant, hauling and placing a mixture of aggregate materials, mineral admixture and asphalt binder to form a pavement course for placement upon a previously prepared base or sub base.

321.2 MATERIALS AND MANUFACTURE:

The materials shall conform to Section 710 for the type specified. The specific required mix type shall be called out in the contract documents or as directed by the Engineer.

321.3 WEATHER AND MOISTURE CONDITIONS:

Asphalt concrete shall be placed only when the surface is dry, and when the atmospheric temperature in the shade is 40 degrees F. (50 degrees F for Asphalt Concrete lift less than 2 inch thick) or above. No asphalt concrete shall be placed when the weather is foggy or rainy, or when the base or sub base on which the material is to be placed is unstable. Asphalt concrete shall be placed only when the Engineer determines that weather conditions are suitable.

321.4 APPLICATION OF TACK COAT:

A tack coat shall be applied to all existing and to each new course of asphalt concrete prior to the placing of a succeeding lift of asphalt concrete. The tack coat may be deleted when a succeeding layer of asphalt concrete is being applied over a freshly laid course that has been subjected to very little traffic when approved by the Engineer.

The application of the tack coat shall comply with Section 329. The grade of emulsified asphalt shall be SS-1h or CSS-1h as specified in Section 713.

The same material that is specified above for the tack coat shall be applied to the vertical surfaces of existing pavements, curbs, and gutters, against which asphalt concrete is to be placed.

The surface to be covered may require repair or patching as directed by the Engineer. This shall be addressed in the project specifications prior to the bidding of the project.

321.5 MIX DESIGN

The mix design shall be submitted to the Engineer at least five working days prior to the start of asphalt concrete production. Mix designs provided by the agency may be utilized on projects at the Engineer's discretion. The Engineer will review and approve the mix design to assure it contains all of the required information as outlined in Section 710.3.1. The target values for gradations, binder contents, and air voids will be established as the accepted Job Mix Formula (JMF) based upon the mix design. Mix designs not containing all of the information will be returned within five working days of receipt of all mix design information, for action and resubmission by the contractor.

Once the mix design has been approved by the agency and the mixing plant selected, the Contractor and/or his supplier shall not change plants nor utilize additional mixing plants without prior approval of the Engineer.

If the contractor elects to change its source of material, the contractor shall furnish the Engineer with a new mix design, which meets the requirements of Section 710, as amended by the Project Specifications.

The contractor may make self-directed target changes to the approved mix design within the limits shown below. Requests for self-directed target changes shall be made in writing and acknowledged by the Engineer prior to the start of production of a lot and will remain in effect until such time as any additional changes are implemented. The self-directed target changes must meet the contract requirements for mix design criteria and gradation limits.

TABLE 321-1 ALLOWABLE SELF-DIRECTED TARGET CHANGES	
MEASURED CHARACTERISTICS	ALLOWABLE SELF-DIRECTED TARGET CHANGES
Gradation (Sieve Size)	
3/8 inch	± 4% from mix design target value
No 8	± 4% from mix design target value
No 40	± 2% from mix design target value
No 200	+0.5% from mix design target value
Binder Content	± 0.2% from mix design target value
Effective Air Voids	None

The contractor may propose target changes, other than self-directed changes, to the approved mix design for the approval of the Engineer. The Engineer will determine if the proposed target change will result in mix production that meets the contract requirements for mix design criteria and gradation limits. The target changes will not be retroactive for the purpose of acceptance.

321.6 MIX PRODUCTION:

All materials shall be proportioned by weight in a hot mix asphalt plant in the proportions required by the mix design to provide a homogeneous and workable mass. Each hot mix asphalt plant shall be inspected in accordance with the provisions contained in the 'Hot Mix Asphalt Production Facilities' by the Arizona Rock Products Association and shall have a current inspection certificate. All measuring devices shall be calibrated at least annually by a technician licensed by the Arizona Bureau of Weights & Measures. Mixing plants shall conform to the requirements of AASHTO M-156, except as modified herein.

In drum mix plants the mineral admixture shall be added and thoroughly mixed with the mineral aggregate by means of a mechanical mixing device prior to the mineral aggregate and mineral admixture entering the dryer. The moisture content of the combined mineral aggregate shall be a minimum of three percent by weight of the aggregate during the mixing process.

For drum-mix plants, the mineral admixture shall be weighed across a weight belt, or other approved alternative weighing system, with a weight totalizer prior to entry into the mechanical mixing device. The mechanical mixing device shall be a pugmill type mixer that is in good working condition. The rate of the aggregate feed shall not exceed the mixing device's capacity in ton per hour. The mixer shall be constructed to minimize the loss of mineral admixture and shall be located in the aggregate delivery system at a location where the mixed material can be readily inspected. The mixing device shall be capable of effective mixing in the full range of the asphalt concrete production rates.

The hot plant and equipment shall be constructed and operated to prevent loss of mineral admixture through the dust collection system of the plant.

A positive signal system shall be provided and utilized during production whereby the mixing shall automatically be stopped if the mineral admixture is not introduced into the mineral aggregate. The plant will not be permitted to operate unless the signal system is in good working condition.

The introduction of bituminous material shall be controlled by an automated system fully integrated with the controls or the mineral aggregate and mineral admixture. The production of the plant shall be controlled by the rate required to obtain a uniform mixture of all components. Drying and heating shall be accomplished in such a manner as to preclude the mineral admixture from becoming coated with un-spent fuel. The completed asphalt concrete may be held in storage for up to 12 hours in insulated or heated silos, providing the minimum temperature noted herein for placement and compaction is met behind the placement device. If the Engineer determines that there is an

excessive amount of heat, heat loss, drain down, segregation and/or oxidation of the mixture due to temporary storage, use of surge bins or storage bins will be discontinued.

The temperature of the asphalt concrete, with unmodified binders, upon discharge from the mixer shall not exceed 335 degrees F. The discharge temperature may be increased on the recommendation of the binder supplier, when approved by the Engineer. If the asphalt concrete is discharged from the mixer into a hopper, the hopper shall be constructed so that segregation of the asphalt concrete will be minimized.

321.7 TRANSPORTATION:

Petroleum distillates or other substances that will have a detrimental effect on the asphalt concrete shall not be used as a release agent.

The beds of all transportation units shall be clean and smooth to allow the free flow of material into the paving machine's hopper.

Tarpaulins shall be furnished on all trucks and used when weather condition warrant, or if directed by the Engineer.

321.8 PLACEMENT:

Placement of asphalt concrete pavement shall not commence until authorized by the Engineer. The Engineer's authorization to allow commencement of asphalt concrete paving will generally require all valley gutters, curbing, and curb and gutters which new pavement is to be placed against be in-place and in an acceptable condition i.e. all defective concrete items which new pavement is to be placed against have been replaced.

321.8.1 Placing: All courses of asphalt concrete shall be placed and finished by means of a self-propelled paving machine equipped with an automatically actuated control system, except under certain conditions or at locations where the Engineer deems the use of a self-propelled paving machine impracticable.

The control system shall control the elevation of the screed at each end by controlling the elevation of one end directly and the other end indirectly either through controlling the transverse slope or alternatively when directed, by controlling the elevation of each end independently.

The control system shall be capable of working with one of the following devices:

(a) Ski or non-contact device of not less than 30 feet in length, supported throughout its entire length
(b) Taut stringline or wire set to grade
(c) Short ski or sonar sensing units from curb control
(d) Joint matching shoe

Failure of the control system to function properly shall be cause for the suspension of asphalt concrete production. In order to achieve a continuous operation, the speed of the paving machine shall be coordinated with the hot mix plant and transport units.

If the asphalt concrete is dumped from the hauling vehicles directly into the paving machine, care shall be taken to avoid jarring the machine or moving it out of alignment. No vertical load shall be exerted on the paving machine by the truck.

If asphalt concrete is dumped upon the surface being paved and subsequently loaded in the paving machine, the loading equipment shall be self-supporting and shall not exert any vertical load on the paving machine. Substantially all of the asphalt concrete shall be picked up and loaded into the paving machine.

Self-propelled paving machines shall spread the mixture without segregation or tearing, true to line, grade and crown indicated on the Project plans. Pavers shall be equipped with hoppers and augers that will distribute the mixture uniformly in front of an adjustable floating screed. The raising of the hopper wings must be minimized and the paving machine will not be operated when in an empty condition.

Screeds shall include any strike-off device operated by tamping or vibrating action which is effective, without tearing, shoving or gouging the mixture and which produces a course with a uniform texture and density for the full width being paved. Screeds shall be adjustable as to height and crown and shall be equipped with a controlled heating device for use when required. In the case of the screed, auger extensions and vibrators shall be installed wherever the screed is extended more than one (1) foot beyond the end of the base auger or auger extension. However, when placing material against an extremely uneven curb or edge over a short distance, the Engineer may waive the auger extensions and vibrators.

At any place not accessible to the roller, the mixture shall be thoroughly compacted with tampers to provide a uniform and smooth layer over the entire area compacted in this manner.

321.8.2 Joints: Transverse joints, before a surface course is placed in contact with a cold transverse construction joint, the cold existing asphalt concrete shall be trimmed to a vertical face for its full depth exposing a fresh face. The fresh face shall be tack coated prior to placement of the new asphalt concrete. After placement and finishing the new asphalt concrete, both sides of the joint shall be dense and the joint shall be smooth and tight. The surface in the area of the joint shall not deviate more than 1/4 inch from a 12-foot straightedge, when tested with the straightedge placed across the joint, parallel to the centerline.

Longitudinal joints of each asphalt course shall be staggered a minimum of 6 inches with relation to the longitudinal joint of the immediate underlying course's cold longitudinal construction joint.

Longitudinal joints with existing or cold (more than 32 hours old) asphalt concrete shall require the existing pavement to be trimmed to a vertical face for its full depth exposing a fresh face. The fresh face shall be tacked prior to placement of the adjacent course. Longitudinal joints with an existing asphalt pavement that is less than 32 hours old that has had its edge protected from damage may place adjacent new asphalt concrete after applying the required tack coat. After placement and finishing of longitudinal joints, both sides of the joint shall be dense and the joint shall be smooth and tight. The surface in the area of the joint shall not deviate more than ¼ inch from a 12-foot straightedge, when tested with the straightedge placed across the joint in any direction.

321.8.3 Asphalt Leveling Course: A leveling course shall be used when specified, or as directed in writing by the Engineer, to bring existing pavement to a uniform grade prior to placing an overlay or other course. If a leveling course is being applied on an Asphalt surface, a tack coat shall be applied. The compaction requirements contained in Section 321.10 do not apply to leveling courses.

321.8.4 Compaction; Asphalt Base Course and Surface Course: It is the contractor's responsibility to perform Quality Control monitoring and/or testing during compaction operations to achieve the required compaction. The temperature of the asphalt concrete immediately behind the laydown machine shall meet the minimum requirements of Table 321-2. A probe type electronic thermometer with a current calibration sticker attached will be used to measure the temperature of the asphalt concrete mixture. When measuring the temperature of the mat, the probe shall be inserted at mid-depth and as horizontal as possible to the mat. The minimum temperatures in Table 321-2 do not guarantee that the asphalt mix will be compacted to the required density. The contractor is responsible to achieve the required compaction.

TABLE 321-2

MINIMUM ASPHALT CONCRETE PLACEMENT TEMPERATURE

Base [(1)] Temp (°F)	Mat Thickness (inches)					
	1/2	3/4	1	1 1/2	2	3 and greater
40 – 50	---	---	310	300	285	275
50 – 60	---	310	300	295	280	270
60 – 70	310	300	290	285	275	265
70 – 80	300	290	285	280	270	265
80 – 90	290	280	270	270	265	260
+90	280	275	265	265	260	255

(1) Base on which mix is to be placed

Asphalt compaction equipment shall be of sufficient size and weight to accomplish the required compaction. All compaction equipment shall be operated and maintained in accordance with the manufacturer's recommendations and the project requirements. During the rolling operation, the speed of the roller shall not exceed 3 miles per hour, unless otherwise approved by the Engineer.

Pneumatic tired compactors shall be equipped with skirt-type devices mounted around the tires so that the temperature of the tires will be maintained during the compaction process.

The Engineer will determine the acceptability of the pavement compaction in accordance with Section 321.10.

321.8.5 Smoothness: The completed surfacing shall be thoroughly compacted, smooth and true to grade and cross-section and free from ruts, humps, depressions or irregularities. An acceptable surface shall not vary more than one-fourth (¼) inch from the lower edge of a 12-foot straightedge when the straightedge is placed parallel to the centerline of the roadway.

321.8.6 Asphalt Concrete Overlay: Asphalt concrete overlay consists of the placing and compacting plant mix asphalt concrete over existing pavement. The mix design and thickness of the overlay shall be as shown on the plans or as specified in the special provisions.

Except when the existing asphalt surface is to be preheated and remixed, pavement surfaces shall be prepared as follows:

(a) Areas designated for pavement repair by the contract documents (which may include severely raveled areas, severely cracked areas, over-asphalted areas, and other defects) shall be cut out and replaced. Pavement repairs shall be completed and approved before placing asphalt concrete overlay.

(b) Before placing asphalt concrete overlay, milling shall be done as shown on the plans or specified in the special provisions and shall be in accordance with Section 317.

(c) After pavement repairs and milling have been completed the entire surface shall be cleaned with a power broom.

(d) After surfaces have been prepared to the satisfaction of the Engineer, they shall receive a tack coat per Section 321.4. Traffic will not be permitted to travel over surfaces which have received a tack coat, except when tack coat is applied to milled surfaces in compliance with Section 317.2 for dust control purposes. When the overlay is to extend onto a concrete gutter, the gutter shall be thoroughly cleaned of loose dust and cement particles and shall be tack coated.

Asphalt concrete overlay shall be placed as specified in Section 321.8.1 and compacted as specified in Section 321.8.4. The surface smoothness shall meet the tolerances specified in Section 321.8.5.

Frames and covers of manholes, survey monuments, valve boxes, clean-outs and other existing structures shall be adjusted in accordance with Section 345 to set flush with the finished surface of the new pavement. During adjustment if pavement or base materials are removed or disturbed, they shall be replaced with approved materials installed in a manner acceptable to the Engineer.

On roads without curb and gutter, the existing unpaved shoulder elevation shall be adjusted by the Contractor to match the elevation at the edge of the new overlay and slope away from the new pavement surface at a rate that the existing quantity of shoulder material will allow. Shoulder material shall be compacted to a minimum of 95% of maximum density, determined in accordance with Section 301.3. Shoulder adjustment to match the new pavement surface elevation shall not be measured. The cost of shoulder adjustment shall be included in the price paid for the asphalt concrete overlay or other related pay items. When the Engineer determines an insufficient amount of material is available for shoulder adjustment, the Engineer may require the Contractor to provide additional material. Acceptable material for shoulders includes the existing shoulder material, millings, untreated base materials, or a

granular material approved by the Engineer. Engineer requested imported material for shoulder adjustment is not included in the price paid for the asphalt concrete overlay.

321.8.7 Pavement Fabric Interlayer: Pavement fabric interlayer shall be used only when specified on the plans or in the specifications.

Pavement fabric interlayer shall be in accordance with Table 796-1 and be the class designated on the plans or in the specifications.

Asphalt binder coat used to bond the fabric to the pavement shall be paving asphalt PG 70-10 asphalt cement conforming to the requirements of Section 711. The application and distributing equipment for the asphalt binder shall conform to the requirements of Section 330. The asphalt binder coat shall be uniformly spray applied to the prepared pavement surface at the rate of 0.20 gallons per square yard for Class B fabric or at the rate of 0.25 gallons per square yard for Class A fabric. Some underlying surfaces may require a higher or lower application rate. A test strip may be necessary to determine the proper application rate. The width of liquid asphalt cement application shall be the fabric width, plus six inches.

Neither the asphalt binder coat or fabric interlayer shall be placed when weather conditions, in the opinion of the Engineer, are not suitable. The asphalt binder and fabric interlayer shall only be placed when the pavement is dry, the ambient air temperature is 50 degrees F and rising, and pavement temperature is 40 degrees F and rising.

Equipment for placing the fabric shall be mechanized and capable of handling full rolls of fabric. The equipment shall be able to lay the fabric smoothly to maximize pavement contact and remove air bubbles. Stiff bristle brooms shall be used to smooth the fabric. The equipment used to place the fabric shall be in good working order and is subject to approval by the Engineer.

Pavement fabric interlayer shall not be placed if the in-place binder is hotter than 325 degrees F or has cooled to 180 degrees F or below (as determined by non-contact thermometer).

Pavement fabric interlayer shall be placed onto the asphaltic binder with the heat bonded side up with a minimum amount of wrinkling or folding. Remaining wrinkles or folds 1-inch and larger shall be removed or slit and shingle-lapped in the direction of paving. Burning or torching of wrinkles is not allowed. Fabric shall overlap three to six inches to insure full closure of the joint. Transverse joints shall be shingle-lapped in the direction of paving to prevent edge pickup by the paver. A second application of hand-placed asphalt binder may be required at laps and repairs as determined by the Engineer to ensure proper binding of the narrow double fabric layer.

All areas where fabric has been placed shall be paved with asphaltic concrete during the same workshift. Placement of the asphaltic concrete shall closely follow fabric lay down. The temperature of the asphaltic concrete immediately behind the laydown machine shall not exceed 325 degrees F. In the event that the asphalt binder coat bleeds through the fabric causing construction problems before the overlay is placed, the affected areas shall be sanded with a sand blotter in compliance with Section 333. Excess sand shall be removed before beginning the paving operation. In the event of rainfall prior to the placement of the asphaltic concrete, the fabric shall be allowed to dry before the asphalt concrete is placed.

Turning of the paving machine or of other vehicles on the fabric shall be gradual and kept to a minimum to avoid damage to the fabric. Should equipment tires stick to the fabric during pavement operations, small quantities of paving asphalt concrete shall be broadcast on the fabric to prevent pick-up. Decrease of binder rate in order to minimize pick-up on tires is not allowed.

321.8.8 Thickened Edge: When the depth of the thickened edge extends four inches or more below the bottom of the asphalt pavement, the portion of the thickened edge extending below the asphalt pavement shall be placed and compacted prior to placement of the asphalt pavement. Placement of tack coat on the surface of the compacted thickened edge asphalt may be omitted when additional asphalt pavement is placed on the same day and the Engineer agrees that the surface of the thickened edge asphalt has remained clean.

When the depth of the thickened edge extends less than four inches below the bottom of the asphalt pavement, the

portion below the asphalt pavement may be placed and compacted with the asphalt pavement in a single operation.

321.8.9 Safety Edge: The finished safety edge slope shall be planar forming a 30° ± 5° angle with the adjacent roadway surface and extend a minimum of five inches (5") below the roadway pavement's finished surface.

The safety edge shall be constructed with the top or final paving lift of a new pavement or overlay using a device that is mounted to or is a part of the screed portion of the laydown machine. The safety edge device shall be capable of constraining the asphalt concrete material to increase density of the extruded profile by reducing the volume. A conventional single strike-off plate is not acceptable. Compaction obtained from the extruded safety edge shall be acceptable when the extruded shape conforms to the specified shape.

During laydown operations if the extruded safety edge does not conform to the specified shape, the Contractor shall take immediate actions to correct the deficiency and to repair all non-compliant sections of safety edge. The Contractor shall stop paving operations until corrections to the laydown operation have been made and resumption of paving is approved by the Engineer or his designated representative.

321.8.10 Protection for Asphalt Base Course: Arterial roadway traffic shall not be allowed on a new asphalt base course that is less than five inches (5") in thickness without the written consent of the Engineer.

321.9 QUALITY CONTROL:

It is the contractor's responsibility to perform Quality Control monitoring and/or testing during asphalt concrete production to achieve the required compaction and to perform Quality Control monitoring and/or testing during asphalt concrete production to achieve the required mix properties. The Engineer may obtain samples of any portion of any material at any point of the operations for his own use. Also, the Engineer may order the use of any drying, proportioning and mixing equipment or the handling of any material discontinued which, in his/her opinion, fails to produce a satisfactory mixture.

The asphalt concrete produced shall conform to the requirements of the production tolerances established in section 321.10. When the asphalt concrete does not conform to the production tolerances, it shall be reported to the Engineer, and corrective quality control measures shall be implemented, or production shall cease immediately at no additional cost to the contracting Agency.

Requests for Referee Testing as described in 321.11 will only be considered based on quality control test results performed by a laboratory accredited by the AASHTO Accreditation Program (AAP) for the tests being performed or a laboratory listed in the current ADOT Directory of Approved Materials Testing Laboratories for the set of tests in question. The laboratory shall use properly certified technicians in accordance with ASTM D3666, Section 7 (Personnel Qualifications).

321.10 ACCEPTANCE:

321.10.1 Acceptance Criteria: Asphalt concrete will be divided into lots for the purpose of acceptance. A lot shall be one day's production. Each lot shall be divided into sublots of 500 ton or fraction thereof. Tests used to determine acceptance will be performed by a laboratory accredited by the AASHTO Accreditation Program (AAP) for the tests being performed. The laboratory shall be employed by the Contracting Agency. The acceptance laboratory will take representative samples of the asphalt concrete from each sublot to allow for gradation, binder content, air voids, pavement thickness and compaction of base and surface course. Each sublot will be accepted based on the test data from the sample(s) from that sublot. All acceptance samples shall be taken using random locations or times designated by the Engineer in accordance with ASTM D3665.

321.10.2 Gradation, Binder Content and Air Voids: The acceptance laboratory will take a sample of the asphalt concrete in accordance with the requirements of Section 2 or 4 of Arizona Test Methods 104 or AASHTO T-168 from each sublot. The minimum weight of the sample shall be 45 pounds. Asphalt binder content and gradation shall be determined in accordance with AASHTO T-308 using the ignition furnace for each sublot. The acceptance laboratory is responsible for obtaining the necessary materials and performing an ignition furnace calibration as outlined in AASHTO T-308 for each asphalt concrete mixture utilized on the project. The correction factor used for

each test shall be clearly indicated on the report. The bulk density for Marshall Mix designs shall be tested in accordance with AASHTO T-245. The bulk density for Gyratory mix designs shall be determined in accordance with AASHTO T-312. The maximum theoretical density shall be determined in accordance with the requirements of AASHTO T-209 including fan drying per AASHTO T209 Section 15. Effective voids of the laboratory compacted specimens will be determined at a minimum of once per lot in accordance with the requirements of AASHTO T-269. Should the testing for effective air voids not meet the "Full Payment" or "No Corrective Action" requirements of Table 321-5, additional testing for laboratory air voids on the remaining sublots will be performed as necessary to determine the extent of the deficiency. Acceptance testing results will be furnished to the contractor and the supplier within five working days of receipt of samples by the acceptance laboratory.

During production, the allowable deviations from the mix design gradation targets are listed in the tables below. The allowable production tolerances may fall outside of the mix design gradation bands.

TABLE 321-3A
GRADATION ACCEPTANCE LIMITS FOR MARSHALL MIXES

Sieve Size	3/8 inch Mix	1/2 inch Mix	3/4 inch Mix	Base Mix
1 inch	---	---	---	±7%
3/4 inch	---	---	±7%	±6%
1/2 inch	---	±7%	---	---
3/8 inch	±7%	±6%	±6%	±6%
No. 8	±6%	±6%	±6%	±6%
No. 40	±4%	±4%	±4%	±4%
No. 200	±2%	±2%	±2%	±2%

TABLE 321-3B
GRADATION ACCEPTANCE LIMITS FOR GYRATORY MIXES

Sieve Size	3/8 inch Mix	1/2 inch Mix	3/4 inch Mix
3/4 inch	---	---	±7%
1/2 inch	---	±7%	±6%
3/8 inch	±7%	±6%	---
No. 8	±6%	±6%	±6%
No. 40	±4%	±4%	±4%
No. 200	±2%	±2%	±2%

If the results from a single acceptance sample fall outside of the acceptance limits in Table 321-3A or 321-3B as applicable, a second sample shall be taken and if the second acceptance sample is also outside of the acceptance limits the Contractor shall cease production of asphalt concrete. Production shall not begin again until calibration test results verify that adjustments made to materials or proportions yield a gradation that falls within acceptance limits in Table 321-3A or 321-3B as applicable.

If the asphalt binder content is within ± 0.40% of the mix design target value, the asphalt concrete will be paid for at the contract unit price. If the asphalt binder content deviates by more than ± 0.40% from the mix design target value, the deficient area will be evaluated within the sublot by coring at maximum intervals of 100 feet from the deficient sample. The asphalt content of the original deficient sample will be averaged with the asphalt binder content of the cores taken for re-evaluation to determine compliance with the acceptance requirements. If the resulting average of the asphalt binder content deviates by more than ± 0.40% from the mix design target value, then Table 321-4 shall apply to the sublot. Additional cores may be required to define the limits of the deficient area, and shall not be used for re-evaluating acceptance.

TABLE 321-4		
ASPHALT BINDER CONTENT ACCEPTANCE AND PENALTIES		
Deviation from that permitted	When the contracting agency is the owner: Payment Reduction ($ per ton of asphalt concrete)	When the contracting agency is not the owner (i.e. permits): Corrective Action
Over 0.2% above that permitted	Removal* or EA	Removal* or EA
Over 0.1% to 0.2% above that permitted	$6.00	EA
Over 0.0% to0.1% above that permitted	$2.00	EA
Within permitted range	Full Payment	No Corrective Action
Over 0.0% to0.1% below that permitted	$2.00	EA
Over 0.1% to 0.2% below that permitted	$6.00	EA
Over 0.2% below that permitted	Removal* or EA	Removal* or EA

NOTES: *The Contractor shall remove and replace the entire sublot that is deficient.
EA = Engineering Analysis per Section 321.10.6

If the laboratory air voids fall within a range of 2.8% to 6.2%, the asphalt concrete will be paid for at the contract unit price. If the laboratory air voids are outside of this range, the deficient area will be evaluated within the sublot by coring at maximum intervals of 100 feet from the deficient sample. The laboratory air voids of the original deficient sample will be averaged with the laboratory air voids obtained from each of the cores taken for re-evaluation to determine compliance with the acceptance requirements. If the resulting average of the laboratory air voids is outside the indicated range, then Table 321-5 shall apply to the sublot. Additional cores may be required to define the limits of the deficient area, and shall not be used for re-evaluating acceptance.

TABLE 321-5		
LABORATORY VOIDS ACCEPTANCE AND PENALTIES		
Laboratory Air Voids (Measured at N_{des} or 75 blows as applicable)	When the contracting agency is the owner: Payment Reduction ($ per ton of asphalt concrete)	When the contracting agency is not the owner (i.e. permits): Corrective Action
Less than 1.5%	Removal* or EA	Removal* or EA
1.5-2.0%	$5.00	EA
2.1-2.7%	$2.00	EA
2.8-6.2%	Full Payment	No Corrective Action
6.3-6.9%	$2.00	EA
7.0-8.0%	$5.00	EA
Greater than 8.0%	Removal* or EA	Removal* or EA

NOTES: *The Contractor shall remove and replace the entire sublot that is deficient
EA = Engineering Analysis per Section 321.10.6
Removal for In-place Air Voids Greater than 11.0% is not eligible for Section 321.10.6.

If an agency or Engineer is purchasing asphalt concrete directly from a commercial material supplier, the agency or Engineer will use Section 321.10, and specifically Tables 321-3A or 321-3B as applicable, 321-4 and 321-5 from Section 321.10, when determining the acceptance of the asphalt concrete with the material supplier.

321.10.3 Surface Testing: If directed by the Engineer surface drainage test shall be performed. The completed surfacing shall be thoroughly compacted, smooth and true to grade and cross-section and free from ruts, humps, depressions or irregularities. An acceptable surface shall not vary more than 1/4 inch from the lower edge of a 12-foot straightedge when the straightedge is placed parallel to the centerline of the roadway. The straightedge shall be furnished by the contractor and shall be acceptable to the Engineer.

All streets shall be water tested for drainage in the presence of the Engineer or designated representative before final acceptance. Any areas not draining properly shall be corrected to the Engineer's satisfaction at the Contractor's expense. Water for this testing shall be provided and paid for by the Contractor.

When deviations in excess of the above tolerance are found, humps or depressions shall be corrected to meet the specified tolerance, or shall be cut out along neat straight lines and replaced with fresh hot mixture and thoroughly compacted to conform with and bond to the surrounding area. When pavement is removed, the limits of removal shall be adjusted to prevent full depth longitudinal joints from being located within a lane wheel path. The lane wheel path is the entire lane width except the area within one foot of a lane line stripe and except the center two feet of the travel lane. The limits of full depth pavement removal shall be extended to the edge of asphalt pavement if the removal limit is within forty-eight inches (48") of the asphalt pavement edge. Materials and work necessary to correct deficiencies shall be at no additional cost to the Contracting Agency.

321.10.4 Asphalt Pavement Thickness: Asphalt Pavement thickness will be determined from cores secured from each sublot for this purpose. Such cores will be taken and measured by the Asphalt Concrete Coring Method. This method can be found at in Section 321.14. Each core location will be patched by the party responsible for the testing.

If the pavement thickness is deficient from the target thickness by 0.25 inches or less, it will be paid for at the contract unit price.

If the pavement thickness deficiency is greater than 0.25 inches and the contracting agency is not the owner (i.e. permits) the following steps will apply:

(1) If the thickness deficiency of the pavement exceeds 0.25 inch, the limits of the deficient area will be evaluated by coring at maximum intervals of 100 feet from the deficient core. The thicknesses of the original deficient core will be averaged with the thicknesses of the cores taken from 100 feet on each side of it to determine compliance with the acceptance requirements. If the resulting average thickness deficiency is greater than 0.25 inch, additional cores may be required to define the limits of the deficient area, and shall not be used for re-evaluating acceptance.

(2) If the pavement thickness from step one above deviates from the target thickness by more than 0.25 inch but not more than 0.50 inch, corrective action will be required. This corrective action will consist of application of a Type II slurry seal coat in accordance to Section 715. The Contractor may present an engineering analysis outlining other proposed remedial measures for the consideration of the Engineer. The Engineer will review the engineering analysis and decide within 30 working days whether to accept the proposed remedial measures.

(3) If the pavement thickness from step one above deviates from the target thickness by more than 0.50 inch, corrective action will be required. The deficient area shall be overlaid with no less than a 1 inch thick lift, for the full width of the pavement to meet or exceed the designed thickness, with appropriate end and edge milling, using a mixture approved by the Engineer. The Contractor may present an engineering analysis outlining other proposed remedial measures for the Engineer's consideration. The Engineer will review the engineering analysis and decide within 10 working days whether to accept the proposed remedial measures. If the Engineer chooses to reject the engineering analysis, the indicated overlay will be constructed by the Contractor at no additional cost to the Owner.

If the Contracting Agency is the owner and the pavement thickness deficiency is greater than 0.25 inches but less than 0.50 inches Table 321-6 will apply. If the pavement thickness deficiency is greater than 0.5 inches the deficient area shall be overlaid with no less than a 1-inch thick lift for the full width of the pavement to meet or exceed the designed thickness using an asphalt mixture approved by the Engineer. The Contractor shall provide appropriate end and edge milling. The overlay and milling shall be accomplished by the Contractor at no additional cost to the Contracting Agency.

TABLE 321-6

ASPHALT PAVEMENT THICKNESS PAYMENT REDUCTION
For Thickness Deficiency of More Than 0.25 inches and less than 0.50 inches

Specified Pavement Thickness	Reduction in Payment or Corrective Action
Less than 1.5 inches	50%
1.50 inches to 1.99 inches	33%
2.00 inches to 2.49 inches	25%
2.50 inches to 2.99 inches	20%
3.00 inches and over	17%

321.10.5 Density:

321.10.5.1 Pavement 1-1/2 Inches or Less in Nominal Thickness:

Compaction shall consist of a "Rolling Method Procedure" using an established sequence of coverage with specified types of compactors. A pass shall be defined as one movement of a compactor in either direction. Coverage shall be the number of passes as are necessary to cover the entire width being paved.

The rolling sequence, the type of compactor to be used, and the number of coverages required shall be as shown in Table 321-7.

TABLE 321-7				
ROLLING SEQUENCE FOR LIFT THICKNESS 1½" OR LESS				
Rolling Sequence	Type of Compactor		No. of Coverages	
	Option No. 1	Option No. 2	Option No.1	Option No. 2
Initial	Static Steel	Vibrating Steel	1	1
Intermediate	Pneumatic Tired	Vibrating Steel	4	2- 4*
Finish	Static Steel	Static Steel	1-3	1-3
* Based on the roller pattern which exhibits the best performance.				

The Contractor shall select the option for compaction and, when pneumatic-tired compactors are used will designate the tire pressure. Steel wheel compactors shall not be used in the vibratory mode for courses of one inch or less in thickness nor when the temperature of the asphaltic concrete falls below 180 degree F. Initial and intermediate compaction shall be accomplished before the temperature of the asphaltic concrete falls below 200 degree F.

Compaction will be deemed to be acceptable on the condition that the asphaltic concrete is compacted using the type of compactors specified, ballasted and operated as specified, and with the number of coverages of the compactors as specified.

321.10.5.2 Pavement Greater than 1-1/2 Inches in Nominal Thickness:

Achieving the required compaction is the responsibility of the contractor. The number and types of rollers is the contractor's responsibility and shall be sufficient to meet these requirements.

In-place air voids shall be determined in accordance with AASHTO T-269 utilizing cores taken from the finished pavement. The maximum theoretical density used in the determination of in-place air voids will be the average value from the acceptance samples determined for the Lot as outlined in 321.10.1.

The Engineer will designate one random test location for each sublot and the acceptance laboratory will obtain one core from that location. Regardless of sublot quantities or boundaries, a minimum of one core will be obtained per residential street and a minimum of one core per travel lane for collector and arterial streets. The outside one foot of each pass of the pavement course or any unconfined edge will be excluded from testing. The Engineer may exclude areas from the compaction lot that are not accessible by normal compaction equipment.

The Contractor will provide the traffic control to facilitate any coring operations necessary for compaction acceptance.

Cores will be taken per the Asphalt Concrete Coring Method. This method can be found in Section 321.14. Acceptance testing results will be furnished to the contractor within five working days of receipt of samples by the acceptance laboratory.

If the pavement density has in-place voids of 8.0% or less, the asphalt concrete will be paid for at the contract unit price. If the pavement density has in-place voids greater than 8.0%, the deficient area will be evaluated within the sublot by coring at maximum intervals of 100 feet from the deficient core(s). If both cores in a sublot are deficient, 3 to 4 additional cores may be necessary to re-evaluate acceptance. The in-place voids of all the original core(s), whether deficient or acceptable, will be averaged with the in-place voids of the cores taken for re-evaluation to determine compliance with the acceptance requirements. If the average of the in-place voids is greater than 8.0% then Table 321-8 shall apply to the sublot. Additional cores may be required to define the limits of the deficient area, and shall not be used for re-evaluating acceptance.

TABLE 321-8		
PAVEMENT DENSITY PENALTIES		
Limits of In-place Air Voids for design lift thicknesses 1.5 inches and greater	When the contracting agency is the owner: Payment Reduction ($ per ton of asphalt concrete)	When the contracting agency is not the owner (i.e. permits): Corrective Action
Below 3.0%	Removal* or EA	Removal* or EA
3.0% to below 4.0%	$10.00	EA and Type II Surry Seal
4.0% to 8.0%	Full Payment	No Corrective Action
Greater than 8.0% to less than 9.0%	$6.00	EA
9.0% to 10.0%	$10.00	EA and Type II Surry Seal
Greater than 10.0%	Removal* or EA	Removal* or EA

NOTES: *The Contractor shall remove and replace the entire sublot that is deficient.
EA = Engineering Analysis per Section 321.10.6
Removal for In-place Air Voids greater than 11.0% is not eligible for Section 321.10.6.

321.10.6 Engineering Analysis (EA): Within 10 working days after receiving notice that a lot or sublot of asphalt concrete is deficient and is found to fall within the "Removal or EA" band per Table(s) 321-4, 321-5, and/or 321-8 the contractor may submit a written proposal (Engineering Analysis) to accept the material in place at the applicable penalties along with possible remediation(s) listed in the "Removal or EA" category. Engineering Analysis can also be proposed for non-removal categories of "Corrective actions" when the contracting agency is not the owner (i.e. permits).

The Engineering Analysis shall contain an analysis of the anticipated performance of the asphalt concrete if left in place. The Engineering Analysis shall also detail the effect of any proposed corrective action to the material(s) in place as it relates to the in-place material's performance. The Engineering Analysis shall be performed by a professional engineer experienced in asphalt concrete testing and mix designs.

If a lot or sublot is accepted for referee testing and found to be deficient, the contractor shall have ten working days to submit an engineering analysis beginning upon notification of referee test results.

When an Engineering Analysis recommends that a specific lot or sublot should not be removed, the Engineering Analysis will recommend that the following penalties (Table 321-9) be paid when the contracting agency is the owner, for the specific criteria being reviewed by the EA.

TABLE 321-9		
ENGINEERING ANALYSIS PENALTIES for REMOVAL* LOTS/SUBLOTS LEFT IN-PLACE		
Acceptance Criteria	**Acceptance Limits**	**Penalty When Contracting Agency is the Owner ($/Ton)**
Asphalt Binder Content	Over 0.2% points from that Permitted	$9.00
Laboratory Air Voids (Measured at N_{des} or 75 blows as applicable)	Less than 1.5% or Greater Than 8.0%	$3.75
Limits of In-place Air Voids	10.1% to 11.0%	$9.00

Within 15 working days, the Engineer will determine whether or not to accept the contractor's proposed Engineering Analysis.

321.11 REFEREE:

If the Contractor has reason to question the validity of any of the acceptance test results, the Contractor may request that the Engineer consider referee tests for final acceptance. Any request for referee testing must describe the contractor's reasons for questioning the validity of the original acceptance test results and must clearly describe which set of acceptance tests are in question. The engineer may either accept or reject the request for referee testing. When referee testing is accepted, the Contractor (at the Contractors own expense) will engage an independent laboratory accredited by the AAP or a laboratory listed in the current ADOT Directory of Approved Materials Testing Laboratories as appropriate for the acceptance tests that are being questioned. The independent referee laboratory shall use properly certified technicians in accordance with ASTM D3666, Section 7 (Personnel Qualifications). For the set of test results in question the referee laboratory shall perform a new set of acceptance tests (as required by Section 321.10 representing the area for the set of tests in question).

These tests may include asphalt binder content, aggregate gradation, Marshall or Gyratory unit weight, maximum theoretical unit weight, laboratory air voids and in-place air voids (compaction). Samples for referee testing shall come from representative samples obtained from the completed pavement, as directed by the Engineer.

The number of samples taken will be the same as specified in Section 321.10. The independent laboratory shall compile the test results and transmit them to both the Engineer and the contractor. The independent laboratory shall include a report sealed and signed by an Engineer registered in the State of Arizona, who is experienced in asphalt concrete testing and mix design development. The signed report shall give an opinion that the material evaluated does or does not comply with project specifications, shall clearly describe any deficiencies, and the results will be binding between all parties.

321.12 MEASUREMENT:

Asphalt concrete pavement will be measured by the ton, or by the square yard, for the mixture actually used as allowed above, which shall include the required quantities of mineral aggregates, asphalt binder, and mineral admixture. Measurement shall include any tonnage used to construct intersections, roadways, streets, or other miscellaneous surfaces indicated on the plans or as directed by the Engineer.

321.13 PAYMENT:

The asphalt concrete measured as provided above will be paid for at the contract price per ton or square yard, as adjusted per Section 321.10, which price shall be full compensation for the item complete, as herein described and specified.

Payment for tack coat will be by the ton diluted, based on the rate of application, as directed by the Engineer.

No payment will be made for any overrun in quantity of asphalt concrete in excess of 10 percent based on actual field measurement of area covered, design thickness, and the mix design unit weight. The calculations and payment for overrun will be by individual pay item. To compensate or adjust for a thickness deficiency in an underlying asphalt concrete course, the Engineer may authorize a quantity increase in excess of 10 percent for a subsequent asphalt concrete course. In such cases, the quantity in excess of 10 percent will be paid for at the lowest unit price.

Agency required repairs of existing pavement prior to roadway overlay operations will be paid for as a separate pay item.

Except as otherwise specified, no separate payment will be made for work necessary to construct miscellaneous items or surfaces of asphalt concrete.

321.14 ASPHALT CORE METHOD: Core Drilling of Hot Mix Asphalt (HMA) for Specimens of 4" or 6" diameter

321.14.1 Scope: This method is to establish a consistent method of the use of a diamond bit core to recover specimens of 4 or 6 inch diameter for laboratory analysis and testing. The method will require the use of: water, ice (bagged or other suitable type), dry ice, and a water-soap solution to be utilized when coring asphalt rubber concrete. Individuals doing the specimen recovery should be observing all safety regulations from the equipment manufacturer as well as the required job site safety requirements for actions, and required personal protective equipment.

321.14.2 Core Drilling Device: The core drilling device will be powered by an electrical motor, or by an acceptable gasoline engine. Either device used shall be capable of applying enough effective rotational velocity to secure a drilled specimen. The specimen shall be cored perpendicularly to the surface of pavement, and that the sides of the core are cut in a manner to minimize sample distortion or damage. The machinery utilized for the procedure shall be on a mounted base, have a geared column and carriage that will permit the application of variable pressure to the core head and carriage throughout the entire drilling operation. The carriage and column apparatus shall be securely attached to the base of the apparatus; and the base will be secured with a mechanical fastener or held in place by the body weight of the operator. The core drilling apparatus shall be equipped with a water spindle to allow water to be introduced inside of the drill stem while operating. The cutting edge of the core drill bit shall be of hardened steel or other suitable material with embedded diamond chips in the cutting surface. The core barrel shall be of sufficient diameter to secure a specimen that is a minimum of four or six inches or whichever is prescribed for necessary testing. The core barrel shall not be missing more than one of the teeth used for cutting; if so it shall be discarded and another barrel shall be used. The core barrel shall also be a minimum of two inches longer than the anticipated depth of pavement in accordance with project paving plans.

321.14.3 Accessory Equipment: A sufficient supply of ice and dry ice shall be provided to sufficiently cool the pavement prior to securing the samples from the designated areas in the pavement. The ice should also be used to adjust the temperature of the water used to cool the core bit. A water supply (usually a plastic 35 – 55 gal drum) with sufficient hose to introduce the water into and through the spindle of the coring device by gravity feed. The drum should be white or light in color to minimize excessive thermal heating of the water (*for coring of asphalt rubber cores see Note 1*). At no time shall the water utilized in the coring operation exceed 65° F during the coring operation. Ice shall be utilized to ensure the temperature control of the water being introduced during the cutting operation. An ice chest or other suitably insulated container that can maintain a temperature of less than 70° F shall be used to secure the specimens during transport. The container will be equipped with flat shelving that will support the drilled cores throughout the entire specimen dimension during transport back to the testing facility.

Miscellaneous hand tools to remove the drilled specimen from the drill hole or the core barrel taking great care in not disturbing the specimen more than necessary (refer to fig. 1 in ASTM D5361-05).

321.14.4 Process: The pavement surface at the time of coring shall not exceed a temperature of 90° F; the pavement shall be conditioned with ice or dry ice to ensure that this requirement is met. Immediately after it has been ensured that the pavement has dropped to the required temperature, core drilling shall begin. The operator will then apply an even and continuous pressure (Note 2) to penetrate through the full depth of the pavement. The operator will concurrently ensure that enough water is moving over the core surface as to adequately remove any and all cuttings

that could damage the drilled core. After the pavement thickness has been penetrated the core shall be carefully removed from either the drill hole or the core barrel and be immediately transferred to an ice chest or other suitable container. Each individual core shall be placed on a shelf in the cooler with the exposed side of the specimen facing down, or the "top side" down. If the specimen is a two lift core, the only acceptable means of separating lifts is with a power or other acceptable wet saw type of equipment (conforming to ASTM D5361-05); however, at no time shall cores be split using a mallet and screwdriver or metal straight edge when being tested for bulk density. Perpendicularity of the specimen shall be checked in the field after the specimen has been extracted from the surface. The core operator shall hold the core up to eye level and place the core top side down in a "speed square" or small carpenters square. The specimen placed in the square shall not depart from perpendicular to the axis more than 0.5^{o} (approximately equivalent to 1/16 of an inch in 6 inches). If the specimen is outside of this distance from square it shall be discarded in the field and another sample cored that falls within tolerance. The cores upon arriving at the laboratory for testing shall be carefully cleaned and measured for thickness in accordance with ASTM D3549. A speed square shall be utilized to measure perpendicularity as compared to a 90° degree angle and shall not depart from perpendicular to the axis more than 0.5^{o} (approximately equivalent to 1/16 of an inch in 6 inches). All remaining testing shall be done within the parameters of the current project and / or agency required specification.

---

*Note 1 – It should be noted that when the material to be cored is a rubberized asphalt mixture a wetting agent such as liquid dish soap shall be added to the water barrel to hinder the material from sticking or allowing the binder to spread during coring.

*Note 2 – This refers to pressure exerted on the core barrel and machine during the coring process. Too much pressure can cause damage to the core barrel and the motor; and too little pressure can cause a glazing of the diamonds, reducing cutting efficiency and premature wear of the barrel

- End of Section -

WATER, SEWER AND STORM DRAIN TESTING

611.1 HYDROSTATIC TESTING:

Water lines, including all fittings and connections to the water mains shall be tested for watertightness by subjecting each section to hydrostatic testing in accordance with applicable provisions of AWWA C-600, except as modified below, and shall consist of pressure testing and allowance testing.

The test section shall be slowly filled with potable water and all air shall be vented from the line. The rate of filling shall be as determined by the Superintendent of Water Distribution, with at least 24 hour notice required before tests are scheduled.

The Contractor shall provide all vents, piping, plugs, bulkheads, valves, bracing, blocking, pumps, and measuring devices and all other equipment necessary for making the tests, including pressure gages, and shall pay the Contracting Agency for water used in the tests.

Hydrostatic Testing: Pressure testing may be made before or after backfilling, but backfilling must be completed before allowance testing. If the pipe is center-loaded, a visual inspection for leaks may be made along the pipe line while the test section is under test pressure, and all visible leaks repaired. However, if mechanical compaction is to be used in the backfilling operations as spelled out in AWWA C-600, the tests shall not be made until the backfilling is completed and compacted. Backfill and compaction for the full distance encompassed by restrained/welded joints shall be completed prior to testing. All connections, blowoffs, hydrants and valves shall be tested with the main as far as is practicable. Hydrostatic testing shall not begin until the pipe has been filled with water for at least 24 hours to allow for air venting.

(A) Pressure Testing: Unless otherwise noted in the contract documents, the minimum prescribed test pressure shall be at least 200 psi for lines smaller than 16 inches and 150 psi for lines 16 inches or larger, not to exceed 5 psi over the minimum prescribed test pressure, as measured at the lowest end of the section under test. The duration of each pressure test shall be at least 2 hours, during which time the test section shall not drop below the minimum prescribed test pressure. If the pressure in the pipe test section has not stabilized by the end of the testing period, a hydrostatic retest will be required.

Each section of a new line between sectionalizing valves or between the last sectionalizing valve and the end of the project shall be tested separately as required in AWWA C-600, and/or as modified in these specifications, except that any such section less than 500 feet in length may be tested with the adjacent section, if both sections of line have the same pipe class rating. No section greater than 1/2 mile in total pipe length shall be tested without special written permission of the Engineer.

(B) Testing Allowance/Makeup Water: Makeup water volume shall be determined after the pressure test has been satisfactorily completed and all backfilling and compaction has been completed to top of trench. Testing allowance shall be defined as the maximum quantity of makeup water necessary to be supplied into the pipe line section under test to restore the ending test pressure to the beginning test pressure, after the pipe line has been filled with water and all air expelled. The Contractor shall furnish the necessary apparatus and assistance to conduct the test.

The duration of each makeup water test shall be at least 2 hours. To pass the allowance testing, the quantity of makeup water from the pipe line shall not exceed the makeup water quantity allowed by the following formula, from AWWA C-600:

$$M = \frac{SD\sqrt{P}}{148{,}000}$$

in which

M = testing Allowance (makeup water), in gallons per hour.

S = length of pipe tested, in feet

D = nominal diameter of pipe, in inches.

P = test pressure of the pipe being tested, per 610.15 (A)

Should the test on any section of the pipe line require more makeup water than allowed by the above formula, the Contractor

shall locate and repair the defective pipe, fittings, or joint until the makeup water volume is within the specified allowance. All repairs and retests, if required, shall be made at the Contractor's expense.

Connections to the existing pipelines or existing valves shall not be made until after that section of new construction has satisfactorily passed the hydrostatic tests.

Ductile iron pipe used in conjunction with ACP will be tested to the ACP standards, unless otherwise directed by the Engineer. High pressure systems of all ductile iron pipe will be tested in accordance with AWWA C-600, Section 4.1.

611.2 DISENFECTING WATER MAINS

611.2.1 CLEANING AND TREATING PIPE:

The interior of all pipe and fittings shall be kept as free as possible of all dirt and foreign material at all times, until the pipe is placed in the new line.

If in the opinion of the Engineer, the pipe contains dirt that will not be removed during the flushing operation; the interior of the pipe shall be cleaned and swabbed, as necessary, with a .005 to .010 percent chlorine solution.

611.2.2 LAYING PIPE:

If the Contractor or pipe-laying crew cannot install the pipe in the trench without getting earth into it, the Engineer may require that, before lowering the pipe into the trench, a heavy, tightly woven canvas bag of suitable size be placed over each end of the pipe and left there until the connection is to be made to the adjacent pipe.

At the close of each day's work, the end of the last laid section of pipe shall be plugged, capped, or otherwise tightly closed to prevent the entry of foreign material of any nature.

611.2.3 PREVENTING TRENCH WATER FROM ENTERING PIPE:

At times when pipe laying is not in progress, the open ends of the pipe shall be closed by a watertight plug or other means approved by the Engineer. Joints of all pipe in the trench shall be completed before the work is stopped. If water is in the trench, the seal shall remain in place until the trench is pumped dry.

611.2.4 PACKING MATERIAL:

Only such packing materials as are included in the list of acceptable materials in AWWA C-600 for installation of cast iron water main, shall be used. The packing materials shall be handled in such a manner as to avoid contamination, and shall be dry when placed in the joints. All such materials shall be free of oil, tar, or greasy substances, except that treated paper packing material, jute, cement, or sulphur compound caulking will not be permitted.

611.2.5 FLUSHING COMPLETED PIPE LINES:

(A) Preliminary Flushing: All mains 12 inches and smaller shall be flushed, prior to chlorination, as thoroughly as possible with the water pressure and outlets available. Flushing shall be done after the pressure test has been made. It must be understood that flushing removes only the lighter solids and cannot be relied upon to remove heavy material allowed to get into the main during laying. It is difficult to flush mains over 12 inches in diameter, so in such instances the requirements above, must be rigidly adhered to.

Heavy duty, factory bushed, tapped couplings, with corporation stops shall be located at all high points in the lines to allow the air to be removed prior to testing the water lines and at disinfection points as may be required. Field taps will not be permitted.

The couplings, at high points and disinfection points, shall be left exposed during backfilling until the testing is complete. Couplings and corporation stops shall be left on the mains upon completion of water mains.

(B) Valve Damage by Foreign Material: Unless proper care and thorough inspection are practiced during the laying of water mains, small stones, pieces of concrete, particles of metal, or other foreign material may gain access to mains newly laid or repaired. If it is believed that such foreign material(s) may be in the main, all hydrants on the line shall be thoroughly

flushed and carefully inspected after flushing to see that the entire valve operating mechanism of each hydrant is in good condition.

611.2.6 CHLORINE RESIDUAL:

Before being placed in service, all new mains and repaired portions of, or extensions to existing mains shall be chlorinated so that a chlorine residual of not less than 10 ppm remains in the water after 24 hours standing in the pipe.

611.2.7 METHODS OF APPLYING CHLORINE:

Any of the following methods of application of chlorine (arranged in order of preference) may be used, subject to the approval of the Engineer.

Liquid chlorine gas-water mixture.
Direct chlorine feed.
Calcium or sodium hypochlorite and water mixture.

611.2.8 APPLICATION OF LIQUID CHLORINE:

A chlorine gas-water mixture shall be applied by means of a solution-feed chlorinating device or, if approved by the Engineer, the dry gas may be fed directly through proper devices for regulating the rate of flow and providing effective diffusion of the gas into the water within the pipe being treated. Chlorinating devices for feeding solutions of the chlorine gas or of the gas itself must provide means for preventing the backflow of water into the cylinder.

611.2.9 CHLORINE-BEARING COMPOUNDS IN WATER:

On approval of the Engineer, a mixture of water and a chlorine-bearing compound of known chlorine content may be substituted for liquid chlorine.

(A) Compounds to be Used: The chlorine-bearing compounds that may be used are: Calcium hypochlorite*, and sodium hypochlorite**.

(B) Preparation of Mixture: High-test calcium hypochlorite must be prepared as a water mixture for introduction into the water mains. The powder should first be made into a paste and then thinned to approximately a 1 percent chlorine solution (10,000 ppm). The preparation of a 1 percent chlorine solution requires the following proportions of powder to water:

Product	**Amount of Compound**	**Quantity of Water (Gallons)**
High-test calcium hypochlorite (65—70% Cl)	1 lb.	7.50
Liquid laundry bleach (5.25% Cl)	1—2 pts.	12.6

611.2.10 POINT OF APPLICATION:

The preferred point of application of the chlorinating agent is at the beginning of the pipe line extension or any valved section of it and through a corporation stop inserted in the top of the newly laid pipe. The water injector for delivering the chlorine-bearing water into the pipe should be supplied from a tap on the pressure side of the gate valve controlling the flow into the pipe line extension.

611.2.11 RATE OF APPLICATION:

Water from the existing distribution system or other source of supply shall be controlled so the rate of flow shall not exceed 500 gpm, unless approved by the Superintendent of Water Distribution, through a suitable measuring device into the newly laid pipe line during the application of chlorine. The rate of chlorine solution flow shall be in such proportion to the rate of water entering the pipe that the chlorine dose applied to the water entering the newly laid pipe shall produce at least 10 ppm of residual chlorine after 24 hours standing in the pipe. This may be expected with an application of 50 ppm, although some conditions may require more

On lines 12 inches in diameter or less, determination of the rate of flow of water into the line to be treated may be made by

starting with the line full of water and measuring the rate of discharge at a hydrant located at the end of the pipe farthest away from the point of chlorine application.

For lines larger than 12 inches in diameter, the disinfection operation is generally started with the line empty.

Measurement of the flow of water into and out of all lines shall be made by means of a pitot gage, current type meter, or other approved device.

611.2.12 PREVENTING REVERSE FLOW:

Valves shall be manipulated so that the strong chlorine solution in the line being treated will not flow back into the line supplying the water. Check valves shall be used to accomplish this.

611.2.13 RETENTION PERIOD:

Treated water shall be retained in the pipe long enough to destroy all nonspore-forming bacteria. This period should be at least 24 hours and should produce no less than 10 ppm residual chlorine at the extreme end of the line at the end of the retention period.

NOTE: If the circumstances are such that less than a 24 hour retention period must be used, the chlorine concentration shall be increased to 100 ppm. Under these conditions, special care should be taken to avoid attack on pipes, valves, hydrants and other appurtenances.

611.2.14 CHLORINATING VALVES AND HYDRANTS:

In the process of chlorinating newly laid pipe, all valves or other appurtenances shall be operated while the pipeline is filled with the chlorinating agent.

611.2.15 FINAL FLUSHING, SAMPLING AND TESTING:

Following chlorination, all treated water in the newly laid pipeline shall be thoroughly flushed until the replacement water throughout the new pipeline can be proved, by laboratory testing, comparable in quality to the water served to the public from the existing water system. Prior to sampling for laboratory testing, the residual chlorine throughout the length of the pipeline shall be reduced to 1.0 ppm or less. Once the required residual chlorine level in the pipeline is achieved, samples shall be taken as outlined below.

The Contracting Agency or its authorized representative will collect all samples for testing of the new water mains. To initiate the sampling and testing, the Contractor will present to the Contracting Agency a written request for such work no later than 24 hours prior to the time when samples are to be taken.

Samples shall be taken from a tap and riser located and installed in such a way as to prevent outside contamination. Samples shall never be taken from an unsterilized hose or fire hydrant, because such samples will seldom meet bacteriological standards. The number of sampling locations shall be as follows: Waterlines up to but less than 150 feet in length require one sampling riser installed as near the end as possible; lines 150 feet to 300 feet in length, two sampling risers, one near each end of the line;
lines 300 to 3,000 feet in length, a minimum of three sampling risers. In addition, dead ends on main lines should be represented with a sampling riser.

The number of samples taken at each sampling location shall be determined by the Contracting Agency based on one of the following methods.

(A) One sample from each sampling location which is examined and analyzed in the laboratory over a three day (72 hour) period.

(B) Two samples taken on separate days from each sampling location. Satisfactory water quality of the new main shall continue for a period of at least two days (48 hours) as demonstrated by laboratory examination of these samples.

Upon completion of laboratory testing, results of all tests shall be sent by the laboratory to the Contracting Agency. Results of laboratory analysis will be interpreted by the Contracting Agency, and reported to the Contractor. Under no circumstance shall the Contractor contact the laboratory. If there is need for test results before written reports are submitted, such

information shall be obtained only from the Contracting Agency or its authorized representative.

611.2.16 REPETITION OF CHLORINATION PROCEDURE:

Should the initial treatment fail to result in the conditions specified above, the original chlorination procedure shall be repeated until satisfactory results are obtained.

611.3 SEWER LINE TESTING:

Pressure testing of force mains shall be done in accordance with Section 611.1.

Sewers and pipe lines shall be subject to acceptance testing after backfilling has been completed but prior to the placement of the finished surface material.

The Contracting Agency reserves the right to require testing of the entire installation. Cost of repairs or corrections necessary to conform to the following testing requirements will be borne by the Contractor at no additional cost to the Contracting Agency.

(A) Low Pressure Air Test:

Testing will be accomplished by the means of "Low Pressure Air Testing." Tests may be conducted by the Contractor or an independent testing firm. However, acceptance tests shall be made only in the presence of the Engineer.

Test Procedure:

(1) Before testing, the pipe shall be thoroughly cleaned.
(2) The Contractor shall seal off the section of pipe to be tested at each manhole connection. Test plugs must be securely braced within the manholes.
(3) A minimum of two connecting hoses to link the air inlet test plug with an above ground test monitoring panel must be provided.

(a) One hose is to induce air through the test plug and into the test chamber.
(b) The second hose is for the purpose of monitoring the test pressure from within the enclosed pipe.

(4) UNDER NO CIRCUMSTANCES ARE WORKERS TO BE ALLOWED IN THE CONNECTING MANHOLES WHILE A PRESSURE TEST IS BEING CONDUCTED.
(5) Add air slowly into the test section. After an internal pressure of 4.0 psi is obtained, allow internal air temperature to stabilize.
(6) After stabilization period, adjust the internal air pressure to 3.5 psi, disconnect the air supply and begin timing the test.
(7) Refer to Table 615-1 to determine the length of time (minutes) the section under test must sustain while not losing in excess of 1 psi as monitored by the test gauge. If the section of line to be tested includes more than one pipe size, calculate the test time for each size and add the test times to arrive at the total test time for the section.
(8) Sections so determined to have lost 1 psi or less during the test period will have passed the leakage test. Those sections losing in excess of 1 psi during the test period will have failed the leakage test.
(9) Appropriate repairs must then be completed and the line retested for acceptance.

TABLE 611-1			
SANITARY SEWER AIR TEST			
Minimum Test Time for Various Pipe Sizes*			
Nominal Pipe Size, in.	T (time), min/100 ft	Nominal Pipe Size, in.	T (time), min/100 ft.
3	0.2	21	3.0
4	0.3	24	3.6
6	0.7	27	4.2
8	1.2	30	4.8
10	1.5	33	5.4
12	1.8	36	6.0
15	2.1	39	6.6

18	2.4	42	7.3

* The time has been established using the formulas contained in ASTM C828, Appendix.

(B) Hydrostatic Test:

Exfiltration Testing (water):

Sanitary sewer testing by means of exfiltration should only be considered when low pressure air testing cannot be used and only with the approval of the Engineer.

Testing Procedure:

(1) The Contractor shall furnish all equipment for testing.
(2) Seal off the downstream end of the line and fill with water to a minimum head of 4 feet in a stand pipe at the high end.
(3) A period of at least one hour will be allowed for absorption time before making the test.
(4) A suitable meter or method of measuring the quantity of water used is necessary.
(5) The allowable water loss for sanitary sewers shall not exceed 0.158 gallons per hour per 100 feet of pipe per inch of diameter of pipe under a minimum test head of 4 feet above the top of the pipe at the upper end.

(C) Deflection Test for HDPE and PVC Pipe:

In addition to the tests prescribed above, the Contractor shall perform a deflection test on the system as directed by the Engineer. Any part of the installation which shows deflection in excess of 5% of the nominal inside diameter per Section 738 for HDPE pipe or in excess of 5% of the average inside diameter per ASTM D3034 for PVC pipe, shall be corrected.

After acceptance but prior to the termination of the warranty period, the Contracting Agency may test the long term deflection of the sewer. If the Contracting Agency determines that the deflection has exceeded 7 ½% of the average inside diameter, that portion of the installation shall be corrected by the Contractor at no cost to the Contracting Agency.

(D) Closed Circuit T.V. Inspection:

The Contracting Agency reserves the right to visually inspect the interior of the sewer line using a television camera. Any defects in the pipe or construction methods revealed shall be corrected by the Contractor at no additional cost to the Contracting Agency.

611.4 POST INSTALLATION INSPECTION OF NEW MAINLINE STORM DRAINS:

(A) Video Inspection:

The Contractor shall provide the Engineer with an annotated video inspection record (either VHS or DVD format) of the new mainline storm drain pipeline. The video shall clearly show all joints, seals, connecting pipes, and manholes. This video shall be provided to the Engineer, and reviewed and approved by the Engineer prior to the Contractor being allowed to place the final pavement over the storm drain line.

(B) Deflection Test for HDPE and PVC Pipe:

In addition to the tests prescribed above, the Contractor shall perform a deflection test on the system as directed by the Engineer. Any part of the installation which shows deflection in excess of 5% of the nominal inside diameter per Section 738 for HDPE pipe or in excess of 5% of the average inside diameter per ASTM D3034 for PVC pipe, shall be corrected.

After acceptance but prior to the termination of the warranty period, the Contracting Agency may test the long term deflection of the storm drain. If the Contracting Agency determines that the deflection has exceeded 7 ½% of the average inside diameter, that portion of the installation shall be corrected by the Contractor at no cost to the Contracting Agency.

611.5 PAYMENT:

No separate pay item shall be contained in the proposal for disinfecting water mains. This operation shall be included in the price bid for the water mains, installed complete in place, as specified in the proposal.

The Contracting Agency will pay for the initial sewer C.C.T.V. inspection. Any additional inspection(s) required, due to the failure of the initial inspection, shall be paid for by the Contractor.

No separate payment will be made for this Storm Drain Video or Deflection Testing; the cost of the video and deflection testing shall be included in the cost of the pipe.

- End of Section

611.1 HYDROSTATIC TESTING: (610.15)

Water lines, including all fittings and connections to the water mains shall be tested for watertightness by subjecting each section to hydrostatic testing in accordance with applicable provisions of AWWA C-600, except as modified below, and shall consist of pressure testing and allowance testing.

The test section shall be slowly filled with potable water and all air shall be vented from the line. The rate of filling shall be as determined by the Superintendent of Water Distribution, with at least 24 hour notice required before tests are scheduled.

The Contractor shall provide all vents, piping, plugs, bulkheads, valves, bracing, blocking, pumps, and measuring devices and all other equipment necessary for making the tests, including pressure gages, and shall pay the Contracting Agency for water used in the tests.

Hydrostatic Testing: Pressure testing may be made before or after backfilling, but backfilling must be completed before allowance testing. If the pipe is center-loaded, a visual inspection for leaks may be made along the pipe line while the test section is under test pressure, and all visible leaks repaired. However, if mechanical compaction is to be used in the backfilling operations as spelled out in AWWA C-600, the tests shall not be made until the backfilling is completed and compacted. Backfill and compaction for the full distance encompassed by restrained/welded joints shall be completed prior to testing. All connections, blowoffs, hydrants and valves shall be tested with the main as far as is practicable. Hydrostatic testing shall not begin until the pipe has been filled with water for at least 24 hours to allow for air venting.

(A) Pressure Testing: Unless otherwise noted in the contract documents, the minimum prescribed test pressure shall be at least 200 psi for lines smaller than 16 inches and 150 psi for lines 16 inches or larger, not to exceed 5 psi over the minimum prescribed test pressure, as measured at the lowest end of the section under test. The duration of each pressure test shall be at least 2 hours, during which time the test section shall not drop below the minimum prescribed test pressure. If the pressure in the pipe test section has not stabilized by the end of the testing period, a hydrostatic retest will be required.

Each section of a new line between sectionalizing valves or between the last sectionalizing valve and the end of the project shall be tested separately as required in AWWA C-600, and/or as modified in these specifications, except that any such section less than 500 feet in length may be tested with the adjacent section, if both sections of line have the same pipe class rating. No section greater than 1/2 mile in total pipe length shall be tested without special written permission of the Engineer.

(B) Testing Allowance/Makeup Water: Makeup water volume shall be determined after the pressure test has been satisfactorily completed and all backfilling and compaction has been completed to top of trench. Testing allowance shall be defined as the maximum quantity of makeup water necessary to be supplied into the pipe line section under test to restore the ending test pressure to the beginning test pressure, after the pipe line has been filled with water and all air expelled. The Contractor shall furnish the necessary apparatus and assistance to conduct the test.

The duration of each makeup water test shall be at least 2 hours. To pass the allowance testing, the quantity of makeup water from the pipe line shall not exceed the makeup water quantity allowed by the following formula, from AWWA C-600:

$$M = \frac{SD\sqrt{P}}{148{,}000}$$

in which

M = testing Allowance (makeup water), in gallons per hour.

S = length of pipe tested, in feet

D = nominal diameter of pipe, in inches.

P = test pressure of the pipe being tested, per 610.15 (A)

Should the test on any section of the pipe line require more makeup water than allowed by the above formula, the Contractor shall locate and repair the defective pipe, fittings, or joint until the makeup water volume is within the specified allowance. All repairs and retests, if required, shall be made at the Contractor's expense.

Connections to the existing pipelines or existing valves shall not be made until after that section of new construction has satisfactorily passed the hydrostatic tests.

Ductile iron pipe used in conjunction with ACP will be tested to the ACP standards, unless otherwise directed by the Engineer. High pressure systems of all ductile iron pipe will be tested in accordance with AWWA C-600, Section 4.1.

611.2~~1~~ DISENFECTING WATER MAINS

611.2.1 CLEANING AND TREATING PIPE:

The interior of all pipe and fittings shall be kept as free as possible of all dirt and foreign material at all times, until the pipe is placed in the new line.

If in the opinion of the Engineer, the pipe contains dirt that will not be removed during the flushing operation; the interior of the pipe shall be cleaned and swabbed, as necessary, with a .005 to .010 percent chlorine solution.

611.2.2 LAYING PIPE:

If the Contractor or pipe-laying crew cannot install the pipe in the trench without getting earth into it, the Engineer may require that, before lowering the pipe into the trench, a heavy, tightly woven canvas bag of suitable size be placed over each end of the pipe and left there until the connection is to be made to the adjacent pipe.

At the close of each day's work, the end of the last laid section of pipe shall be plugged, capped, or otherwise tightly closed to prevent the entry of foreign material of any nature.

611.2.3 PREVENTING TRENCH WATER FROM ENTERING PIPE:

At times when pipe laying is not in progress, the open ends of the pipe shall be closed by a watertight plug or other means approved by the Engineer. Joints of all pipe in the trench shall be completed before the work is stopped. If water is in the trench, the seal shall remain in place until the trench is pumped dry.

611.2.4 PACKING MATERIAL:

Only such packing materials as are included in the list of acceptable materials in AWWA C-600 for installation of cast iron water main, shall be used. The packing materials shall be handled in such a manner as to avoid contamination, and shall be dry when placed in the joints. All such materials shall be free of oil, tar, or greasy substances, except that treated paper packing material, jute, cement, or sulphur compound caulking will not be permitted.

611.2.5 FLUSHING COMPLETED PIPE LINES:

(A) Preliminary Flushing: All mains 12 inches and smaller shall be flushed, prior to chlorination, as thoroughly as possible with the water pressure and outlets available. Flushing shall be done after the pressure test has been made. It must be understood that flushing removes only the lighter solids and cannot be relied upon to remove heavy material allowed to get into the main during laying. It is difficult to flush mains over 12 inches in diameter, so in such instances the requirements above, must be rigidly adhered to.

Heavy duty, factory bushed, tapped couplings, with corporation stops shall be located at all high points in the lines to allow the air to be removed prior to testing the water lines and at disinfection points as may be required. Field taps will not be permitted.

The couplings, at high points and disinfection points, shall be left exposed during backfilling until the testing is complete. Couplings and corporation stops shall be left on the mains upon completion of water mains.

(B) Valve Damage by Foreign Material: Unless proper care and thorough inspection are practiced during the laying of water mains, small stones, pieces of concrete, particles of metal, or other foreign material may gain access to mains newly laid or repaired. If it is believed that such foreign material(s) may be in the main, all hydrants on the line shall be thoroughly flushed and carefully inspected after flushing to see that the entire valve operating mechanism of each hydrant is in good condition.

611.2.6 CHLORINE RESIDUAL:

Before being placed in service, all new mains and repaired portions of, or extensions to existing mains shall be chlorinated so that a chlorine residual of not less than 10 ppm remains in the water after 24 hours standing in the pipe.

611.2.7 METHODS OF APPLYING CHLORINE:

Any of the following methods of application of chlorine (arranged in order of preference) may be used, subject to the approval of the Engineer.

Liquid chlorine gas-water mixture.
Direct chlorine feed.
Calcium or sodium hypochlorite and water mixture.

611.2.8 APPLICATION OF LIQUID CHLORINE:

A chlorine gas-water mixture shall be applied by means of a solution-feed chlorinating device or, if approved by the Engineer, the dry gas may be fed directly through proper devices for regulating the rate of flow and providing effective diffusion of the gas into the water within the pipe being treated. Chlorinating devices for feeding solutions of the chlorine gas or of the gas itself must provide means for preventing the backflow of water into the cylinder.

611.2.9 CHLORINE-BEARING COMPOUNDS IN WATER:

On approval of the Engineer, a mixture of water and a chlorine-bearing compound of known chlorine content may be substituted for liquid chlorine.

(A) Compounds to be Used: The chlorine-bearing compounds that may be used are: Calcium hypochlorite*, and sodium hypochlorite**.

(B) Preparation of Mixture: High-test calcium hypochlorite must be prepared as a water mixture for introduction into the water mains. The powder should first be made into a paste and then thinned to approximately a 1 percent chlorine solution (10,000 ppm). The preparation of a 1 percent chlorine solution requires the following proportions of powder to water:

Product	**Amount of Compound**	**Quantity of Water (Gallons)**
High-test calcium hypochlorite (65—70% Cl)	1 lb.	7.50
Liquid laundry bleach (5.25% Cl)	1—2 pts.	12.6

611.2.10 POINT OF APPLICATION:

The preferred point of application of the chlorinating agent is at the beginning of the pipe line extension or any valved section of it and through a corporation stop inserted in the top of the newly laid pipe. The water injector for delivering the chlorine-bearing water into the pipe should be supplied from a tap on the pressure side of the gate valve controlling the flow into the pipe line extension.

611.2.11 RATE OF APPLICATION:

Water from the existing distribution system or other source of supply shall be controlled so the rate of flow shall not exceed 500 gpm, unless approved by the Superintendent of Water Distribution, through a suitable measuring device into the newly laid pipe line during the application of chlorine. The rate of chlorine solution flow shall be in such proportion to the rate of water entering the pipe that the chlorine dose applied to the water entering the newly laid pipe shall produce at least 10 ppm

of residual chlorine after 24 hours standing in the pipe. This may be expected with an application of 50 ppm, although some conditions may require more

On lines 12 inches in diameter or less, determination of the rate of flow of water into the line to be treated may be made by starting with the line full of water and measuring the rate of discharge at a hydrant located at the end of the pipe farthest away from the point of chlorine application.

For lines larger than 12 inches in diameter, the disinfection operation is generally started with the line empty.

Measurement of the flow of water into and out of all lines shall be made by means of a pitot gage, current type meter, or other approved device.

611.2.12 PREVENTING REVERSE FLOW:

Valves shall be manipulated so that the strong chlorine solution in the line being treated will not flow back into the line supplying the water. Check valves shall be used to accomplish this.

611.2.13 RETENTION PERIOD:

Treated water shall be retained in the pipe long enough to destroy all nonspore-forming bacteria. This period should be at least 24 hours and should produce no less than 10 ppm residual chlorine at the extreme end of the line at the end of the retention period.

NOTE: If the circumstances are such that less than a 24 hour retention period must be used, the chlorine concentration shall be increased to 100 ppm. Under these conditions, special care should be taken to avoid attack on pipes, valves, hydrants and other appurtenances.

611.2.14 CHLORINATING VALVES AND HYDRANTS:

In the process of chlorinating newly laid pipe, all valves or other appurtenances shall be operated while the pipeline is filled with the chlorinating agent.

611.2.15 FINAL FLUSHING, SAMPLING AND TESTING:

Following chlorination, all treated water in the newly laid pipeline shall be thoroughly flushed until the replacement water throughout the new pipeline can be proved, by laboratory testing, comparable in quality to the water served to the public from the existing water system. Prior to sampling for laboratory testing, the residual chlorine throughout the length of the pipeline shall be reduced to 1.0 ppm or less. Once the required residual chlorine level in the pipeline is achieved, samples shall be taken as outlined below.

The Contracting Agency or its authorized representative will collect all samples for testing of the new water mains. To initiate the sampling and testing, the Contractor will present to the Contracting Agency a written request for such work no later than 24 hours prior to the time when samples are to be taken.

Samples shall be taken from a tap and riser located and installed in such a way as to prevent outside contamination. Samples shall never be taken from an unsterilized hose or fire hydrant, because such samples will seldom meet bacteriological standards. The number of sampling locations shall be as follows: Waterlines up to but less than 150 feet in length require one sampling riser installed as near the end as possible; lines 150 feet to 300 feet in length, two sampling risers, one near each end of the line;
lines 300 to 3,000 feet in length, a minimum of three sampling risers. In addition, dead ends on main lines should be represented with a sampling riser.

The number of samples taken at each sampling location shall be determined by the Contracting Agency based on one of the following methods.

(A) One sample from each sampling location which is examined and analyzed in the laboratory over a three day (72 hour) period.

(B) Two samples taken on separate days from each sampling location. Satisfactory water quality of the new main shall

continue for a period of at least two days (48 hours) as demonstrated by laboratory examination of these samples.

Upon completion of laboratory testing, results of all tests shall be sent by the laboratory to the Contracting Agency. Results of laboratory analysis will be interpreted by the Contracting Agency, and reported to the Contractor. Under no circumstance shall the Contractor contact the laboratory. If there is need for test results before written reports are submitted, such information shall be obtained only from the Contracting Agency or its authorized representative.

611.2.16 REPETITION OF CHLORINATION PROCEDURE:

Should the initial treatment fail to result in the conditions specified above, the original chlorination procedure shall be repeated until satisfactory results are obtained.

~~**611.17 PAYMENT:**~~

~~No separate pay item shall be contained in the proposal for disinfecting water mains. This operation shall be included in the price bid for the water mains, installed complete in place, as specified in the proposal.~~

611.3 SEWER LINE TESTING: (615.11)

Pressure testing of force mains shall be done in accordance with Section 611.1 (610.15).

Sewers and pipe lines shall be subject to acceptance testing after backfilling has been completed but prior to the placement of the finished surface material.

The Contracting Agency reserves the right to require testing of the entire installation. Cost of repairs or corrections necessary to conform to the following testing requirements will be borne by the Contractor at no additional cost to the Contracting Agency.

(A) Low Pressure Air Test:

Testing will be accomplished by the means of "Low Pressure Air Testing." Tests may be conducted by the Contractor or an independent testing firm. However, acceptance tests shall be made only in the presence of the Engineer.

Test Procedure:

(1) Before testing, the pipe shall be thoroughly cleaned.
(2) The Contractor shall seal off the section of pipe to be tested at each manhole connection. Test plugs must be securely braced within the manholes.
(3) A minimum of two connecting hoses to link the air inlet test plug with an above ground test monitoring panel must be provided.

(a) One hose is to induce air through the test plug and into the test chamber.
(b) The second hose is for the purpose of monitoring the test pressure from within the enclosed pipe.

(4) UNDER NO CIRCUMSTANCES ARE WORKERS TO BE ALLOWED IN THE CONNECTING MANHOLES WHILE A PRESSURE TEST IS BEING CONDUCTED.
(5) Add air slowly into the test section. After an internal pressure of 4.0 psi is obtained, allow internal air temperature to stabilize.
(6) After stabilization period, adjust the internal air pressure to 3.5 psi, disconnect the air supply and begin timing the test.
(7) Refer to Table 615-1 to determine the length of time (minutes) the section under test must sustain while not losing in excess of 1 psi as monitored by the test gauge. If the section of line to be tested includes more than one pipe size, calculate the test time for each size and add the test times to arrive at the total test time for the section.
(8) Sections so determined to have lost 1 psi or less during the test period will have passed the leakage test. Those sections losing in excess of 1 psi during the test period will have failed the leakage test.
(9) Appropriate repairs must then be completed and the line retested for acceptance.

TABLE 611-1

SANITARY SEWER AIR TEST			
Minimum Test Time for Various Pipe Sizes*			
Nominal Pipe Size, in.	T (time), min/100 ft	Nominal Pipe Size, in.	T (time), min/100 ft.
3	0.2	21	3.0
4	0.3	24	3.6
6	0.7	27	4.2
8	1.2	30	4.8
10	1.5	33	5.4
12	1.8	36	6.0
15	2.1	39	6.6
18	2.4	42	7.3

* The time has been established using the formulas contained in ASTM C828, Appendix.

(B) Hydrostatic Test:

Exfiltration Testing (water):

Sanitary sewer testing by means of exfiltration should only be considered when low pressure air testing cannot be used and only with the approval of the Engineer.

Testing Procedure:

(1) The Contractor shall furnish all equipment for testing.
(2) Seal off the downstream end of the line and fill with water to a minimum head of 4 feet in a stand pipe at the high end.
(3) A period of at least one hour will be allowed for absorption time before making the test.
(4) A suitable meter or method of measuring the quantity of water used is necessary.
(5) The allowable water loss for sanitary sewers shall not exceed 0.158 gallons per hour per 100 feet of pipe per inch of diameter of pipe under a minimum test head of 4 feet above the top of the pipe at the upper end.

(C) Deflection Test for HDPE and PVC Pipe:

In addition to the tests prescribed above, the Contractor shall perform a deflection test on the system as directed by the Engineer. Any part of the installation which shows deflection in excess of 5% of the nominal inside diameter per Section 738 for HDPE pipe or in excess of 5% of the average inside diameter per ASTM D3034 for PVC pipe, shall be corrected.

After acceptance but prior to the termination of the warranty period, the Contracting Agency may test the long term deflection of the sewer. If the Contracting Agency determines that the deflection has exceeded 7 ½% of the average inside diameter, that portion of the installation shall be corrected by the Contractor at no cost to the Contracting Agency.

(D) Closed Circuit T.V. Inspection:

The Contracting Agency reserves the right to visually inspect the interior of the sewer line using a television camera. Any defects in the pipe or construction methods revealed shall be corrected by the Contractor at no additional cost to the Contracting Agency.

611.4 POST INSTALLATION INSPECTION OF NEW MAINLINE STORM DRAINS:

(A) Video Inspection: **(618.5)**

The Contractor shall provide the Engineer with an annotated video inspection record (either VHS or DVD format) of the new mainline storm drain pipeline. The video shall clearly show all joints, seals, connecting pipes, and manholes. This video shall be provided to the Engineer, and reviewed and approved by the Engineer prior to the Contractor being allowed to place the final pavement over the storm drain line.

(B) Deflection Test for HDPE and PVC Pipe:

In addition to the tests prescribed above, the Contractor shall perform a deflection test on the system as directed by the

Engineer. Any part of the installation which shows deflection in excess of 5% of the nominal inside diameter per Section 738 for HDPE pipe or in excess of 5% of the average inside diameter per ASTM D3034 for PVC pipe, shall be corrected.

After acceptance but prior to the termination of the warranty period, the Contracting Agency may test the long term deflection of the storm drain. If the Contracting Agency determines that the deflection has exceeded 7 ½% of the average inside diameter, that portion of the installation shall be corrected by the Contractor at no cost to the Contracting Agency.

611.5 PAYMENT : (611.17)

No separate pay item shall be contained in the proposal for disinfecting water mains. This operation shall be included in the price bid for the water mains, installed complete in place, as specified in the proposal

The Contracting Agency will pay for the initial Sewer C.C.T.V. inspection. Any additional inspection(s) required, due to the failure of the initial inspection, shall be paid for by the Contractor.

No separate payment will be made for this Storm Drain Video or Deflection Testing; the cost of the video and deflection testing shall be included in the cost of the pipe.

- End of Section

Development and Engineering Services Department
11465 W. Civic Center Drive, Suite #120
Avondale, Arizona 85323-6804
Phone: (623) 333-4200 Fax: (623) 333-0420

TO:	MAG Specifications and Details Committee	**DATE:**	June 4, 2014
FROM:	Jim Badowich, Vice Chair		
SUBJECT:	MAG Specifications Section 610 Revision	**Case No.:**	14-15

PURPOSE: To move Hydrostatic Testing from Section 610 to Section 611; to update Table 610-1 consistent with AWWA; to place Section 610 into sequential order.

REVISIONS:

1. Removed Hydrostatic Testing from Section 610 for incorporation into Section 611 (**red strikeouts**).
2. Updated Table 610.1 to be consistent with current (2005) AWWA C105-05 (**Red strikeouts/font**) – includes updated sizing and addition of larger sizes per AWWA C105.
3. Combined "Restraints" section with "Blocking" section; renamed section "Blocking and Restraints" (**moved text in green font**).
4. Reorganized Section to improve sequential flow (**moved text in green font**) and renumbered accordingly (**red strikeouts and red font**).

SECTION 610

WATER LINE CONSTRUCTION

610.1 DESCRIPTION:

The construction of all water lines shall conform to applicable standard specifications and details, except as otherwise required on the plans or as modified in the special provisions.

610.2 GENERAL:

All pipes shall be delivered, handled and installed in accordance with the manufacturer's recommendations and/or applicable provisions of AWWA standards for installation of the various types of water mains specified, insofar as such recommendations and provisions are not in variance with the standard specifications and details.

Where water lines are to be constructed in new subdivisions or in conjunction with street repaving projects, the streets shall be pre-graded to within 6 inches of the new street subgrade prior to trenching or cut stakes shall be set for trenching.

610.3 MATERIALS:

All pipes for water lines shall be of the classes shown on the plans or as specified below.

(A) The 4-inch through 16-inch diameter pipe sizes may be PVC C900 or ductile iron, except where a particular material is specified by the agency or the contract documents. All pipes shall be minimum 150 psi design unless otherwise specified.

(B) Pipe 16 inches and larger may be either ductile iron, or concrete pressure pipe-steel cylinder type.

Ductile iron water pipe and fittings per: Section 750. Concrete pressure pipe-steel cylinder type per: Section 758. C900 PVC per: AWWA C900-07.

Service material containing brass or bronze must comply with the current NSF 61-8 standards at the time the project begins.

All brass or bronze service material must meet the current AWWA C-800 standards.

Any product used in water line construction containing brass or bronze that comes in contact with potable water shall meet the current NSF standards and federal law.

610.4 CONSTRUCTION METHODS:

All water mains in major streets shall have a minimum cover of 48 inches over the top of the pipe. Water mains in other locations shall have a minimum cover over the top of the pipe as follows:

(A) 36 inches for mains smaller than 12 inches.

(B) 48 inches for mains 12 inches and larger.

Cover for water mains will be measured from existing or proposed finished grade of pavement or from natural ground, whichever is deeper.

No water main shall be deflected, either vertically or horizontally, in excess of that recommended by the manufacturer of the pipe or coupling, without the appropriate use of bends or offsets.

If adjustment of the position of a length of pipe is required after it has been laid, it shall be removed and rejoined as for a new pipe.

Every precaution shall be taken to prevent foreign material from entering the pipe. When on the project site, the ends of the pipe section shall be plugged, wrapped or tarped at all times when pipe laying is not in progress, which includes storage and staging at the site. The pipe shall be stored on a pallet, blocking or other means to prevent foreign materials from entering the

pipe. The pipe line shall be protected by a water-tight plug or other means approved by the Engineer when the pipe is in the trench if pipe laying is not in progress.

Except as otherwise required in this specification, the special provisions, or by the Engineer, trench excavation, backfilling and compaction shall be in accordance with the requirements of Section 601. Backfilling may be accomplished as soon as the pipe line has been installed to the satisfaction of the Engineer, subject to the requirements for testing, as contained below.

Hydrostatic testing shall be in accordance with this specification.

All corporation stops used for testing and chlorination shall be left in the pipe line with the stop closed and all connecting pipe removed.

Curb stops with flushing pipes or fire hydrants shall be installed at the ends of dead-end mains according to standard details. Thrust blocks shall be installed in accordance with this specification.

Valve boxes and covers shall be according to standard details.

Ductile iron pipe shall be installed in accordance with this specification and pipe and fittings shall be in accordance with Section 750.

PVC C-900 pipe shall be installed in accordance with AWWA C900 and Section 601.

~~610.14~~ 610.5 BLOCKING and RESTRAINTS

All pipe lines, valves and fittings 16 inches and smaller in diameter shall be blocked with concrete thrust blocks in accordance with standard details. Thrust block areas for pipe, valves and fittings larger than 16 inches in diameter shall be calculated for each size pipe, valve and fitting to be installed and shown on the plans.

Thrust block areas shall be calculated on the basis of 200 psi test pressure bearing against undisturbed 3,000 psf soil.

If soil or pressure conditions other than those stated above are encountered, the thrust block areas shall be calculated and submitted for approval. The areas stipulated in the standard details are minimums and shall not be decreased.

When restrained/welded joints are specified to resist thrust forces, blocking is not required.

With the Engineers approval, restrained/welded joints may be used in lieu of thrust blocks to resist thrust forces.

Where restrained joints are specified on mains sixteen (16) inches in diameter and smaller, ductile iron pipe shall be used with an approved joint restraint method.

On mains sixteen (16) inches in diameter and larger where plans specify welding joints and where ductile iron pipe is furnished, joints shall be restrained by an approved joint restraint method for the distance specified.

~~610.5~~ 610.6 SEPARATION:

~~610.5.1~~ 610.6.1 General: Water lines and sewer lines shall be separated to protect water lines from contamination by sewer lines.

The angle of a water line and sewer line crossing shall be limited to between (45) forty-five degrees and (90) ninety degrees. Intersection angles of less than (45) forty-five degrees shall not be allowed.

Separation distances are measured from the outside diameter of the water or sewer line, or the centerline of a manhole.

When water and sewer lines cannot meet separation requirements, extra protection is required as described in Subsection 610.5.5 and shown in Standard Details 404-1, 404-2 and 404-3.

Extra protection requirements for line crossings are measured from the closest outside surfaces of the sewer and water line.

Water line service connections to individual building supply and distribution plumbing shall not be placed below sewer lines, and shall otherwise comply with the separation requirements of the applicable plumbing code as applied by the Agency (Administrative Authority). Methods described for extra protection do not apply to these service lines.

Water and sewer lines shall not be constructed parallel within a common trench.

~~610.5.2~~ 610.6.2 **Water Line Separation from Gravity Sewer Lines:** Water lines shall not be placed within two (2) feet horizontal and one (1) foot vertical above and two (2) feet vertical below gravity sewer lines.

Extra protection is required where a water line is placed within six (6) feet horizontal and two (2) feet vertical above a gravity sewer line.

Extra protection is required where a water line is placed within six (6) feet horizontal and any distance below a gravity sewer line.

~~610.5.3~~ 610.6.3 **Water Line Separation from Pressurized Sewer Lines:** Water lines shall not be placed within six (6) feet horizontal and within two (2) feet vertical below or within two (2) vertical above a pressurized sewer line.

Extra protection is required where a water line is placed within six (6) feet horizontal and within six (6) feet vertical above a pressurized sewer line.

Extra protection is required where a water line is placed within (6) feet horizontal and any distance below a pressurized sewer line.

~~610.5.4~~ 610.6.4 **Water Line Separation from Manholes:** Water lines shall not pass through or come into contact with any part of a sewer manhole and shall be separated six (6) feet horizontal from the center of a sewer manhole.

~~610.5.5~~ 610.6.5 **Extra Protection:** New water lines that require extra protection from new sewer lines, shall have extra protection provided by using ductile iron pipe for both lines. Lines of standard pipe length shall be centered at the point of crossing so that no joints exist within six (feet) horizontal and only restrained or mechanical joints exist within ten (10) feet horizontal.

New water lines that require extra protection from sewer lines, shall have identification wrap and/or tape installed on the water and sewer lines for the length that requires extra protection for each line.

New water lines that require extra protection from existing sewer lines shall be constructed using the extra protection specified for new water lines, and the existing sewer line:

(1) shall be reconstructed using a standard length of ductile iron pipe centered at the point of crossing so that no joints exist within six (6) feet horizontal and only restrained or mechanical joints exist within ten (10) feet horizontal, or

(1) shall be encased in 6 inches of concrete for the horizontal distance of the line that requires extra protection but for a distance no less than ten (10) feet horizontal.

Existing water lines that require extra protection from new sewer lines shall provide for extra protection by:

(1) constructing the new sewer line and reconstructing the existing water line using ductile iron pipe for both lines with standard pipe lengths centered at the point of crossing so that no joints exist within six (feet) horizontal and restrained or mechanical joints exist within ten (10) feet horizontal, or

(2) encasement of both the existing water line and the new sewer line in six (6) inches of concrete for the horizontal distance of the lines that require extra protection but for a distance no less than ten (10) feet horizontal.

(3) Extra protection for existing ductile iron water lines can be met by the installation of restrained or mechanical joints on the existing water line within ten (10) feet horizontal of the crossing and either

(a) construction of new sewer line using a standard pipe length of ductile iron pipe centered at the point of crossing so that no joints exist within six (6) feet horizontal and restrained or mechanical joints exist within ten (10) feet horizontal, or

(b) encasement of the new sewer line in 6 inches of concrete for the horizontal distance of the line that requires extra protection but for a distance no less than ten (10) feet horizontal.

~~610.6~~ 610.7 POLYETHYLENE CORROSION PROTECTION

~~610.6.1~~ 610.7.1 General: Where called for in the plans and specifications or directed by the Engineer, pipe, valves and fittings shall be protected from corrosion by encasement in a polyethylene protective wrapping referred to hereafter as polywrap. Although not intended to be a completely air and water tight enclosure the polywrap shall provide a continuous barrier between the pipe and surrounding bedding and backfill.

~~610.6.2~~ 610.7.2 Materials: The polywrap shall be of virgin polyethylene, not less than 8 *mils* in thickness, formed into tubes or sheets as may be required. Naturally pigmented material may be used where exposure to ultraviolet light will be less than 48 hours.

Otherwise the material shall be pigmented with 2 to 2 1/2 percent of well dispersed carbon black with stabilizers.

The polywrap shall be secured as specified below with 2-inch wide pressure sensitive tape not less than 10 mils thick. This flexible tape shall consist of a polyethylene or polyvinyl chloride backing with a synthetic elastomeric adhesive film comprised of butyl rubber. Tape shall remain flexible over a wide range of temperatures, with tensile strength and elongation properties in conformance with ASTM D1000.

The minimum tube size for each pipe diameter shall be per Table 610-1.

TABLE 610-1 (from AWWA C105-05)		
POLYWRAP FLAT TUBE WIDTHS		
Nominal Pipe Diameter (Inches)	**Cast Iron Or Ductile Iron With Push-On Joints (inches)**	**Cast Iron or Ductile Iron With Mechanical Joints (inches)**
4	14	16
6	~~17~~ 16	20
8	~~21~~ 20	24
10	~~25~~ 24	27
12	~~29~~ 27	30
14	~~33~~ 30	34
16	~~37~~ 34	37
18	~~41~~ 37	41
20	~~45~~ 41	45
24	~~53~~ 54	53
30	67	.
36	81	.
42	81	.
48	95	.
54	108	.
60	108	.
64	121	.

~~610.6.3~~ 610.7.3 Installation: The polyethylene tubing shall be cut into lengths approximately 2 feet longer than the pipe sections. With the pipe suspended from the center the tube shall be slipped over the spigot end and bunched up between the point of support and the spigot end. After the pipe is installed into the bell of the adjacent pipe the pipe shall be lowered to the trench bottom and the supporting sling removed from the center of the pipe. The pipe shall then be raised at the bell end enough to allow the tube to be slipped along the full length of the barrel with enough left at each end to overlap the adjoining

pipe about 1 foot. A shallow bell hole must be made at each joint to facilitate installation of the polywrap.

Pull the bunched-up polywrap from the preceding length of pipe, slip it over the end of the new length of pipe, and secure in place with one circumferential turn of tape plus enough overlap to assure firm adhesion. Then slip the end of the polywrap from the new pipe section over the end of the first wrap until it overlaps the joint at the end of the preceding length of pipe. Tape it in place.

The loose wrapping on the barrel of the pipe shall be pulled snugly around the barrel of the pipe, and excess material folded over the top of the pipe and the folds held in place by means of short strips of adhesive tape, at about 3 foot intervals along the pipe.

Repair any rips, punctures or other damage to the tube with the adhesive tape or pieces of tube material secured with tape.

Bends and reducers in the line shall be covered with polyethylene in the same manner as pipe.

Valves, tees, crosses and outlets shall be wrapped with flat sheets of the same material. The sheets shall be passed under valves and brought up around the body to the stem. Edges shall be brought together, folded twice and secured with the adhesive tape.

~~610.6.4~~ **610.7.4 Payment:** Payment for this item shall be per the provisions of Subsections 109.4 and 109.5 of the specifications unless this item is specifically called for on the plans or in the supplemental specifications or special provisions as a specific component and pay item for a given project.

~~610.7~~ 610.8 VALVES:

Valves shall be installed in accordance with AWWA C-600 or AWWA C-603 modified as follows:

All tapping sleeves, gate valves, butterfly valves, air release and vacuum valves and corporation stops shall be in accordance with Section 630.

Just before installation in the trench, valves shall be fully opened and closed to check the action, and a record made of the number of turns required to fully open or close the valve. For valves 16 inches and larger, a member of the water utility shall be present to check the action and record the number of turns. The inside of all valves shall then be thoroughly cleaned and the valve installed.

Valves 12 inches and smaller in size shall be supported by concrete blocks, in accordance with the standard details.

Valves 16 inches and larger in size along with their bypass valves, shall be supported on concrete slabs, and/or concrete piers, as indicated on the plans.

Concrete supports shall be provided under valves in vaults and manholes, and shall be constructed an inch low, then grouted with non-shrink grout. Adjustable pipe supports shall be as indicated on the plans. Buried valves shall be supported on concrete blocks as detailed on the plans.

Valve boxes shall be installed over all buried valves in accordance with standard details.

Standard couplings or matching joints shall be used when more than one length of pipe is required, or when two or more pieces are joined, to form the valve box riser. Install extension stems on all valves where the operating nut is 5 feet or more below grade.

~~610.8~~ 610.9 MANHOLES AND VAULTS:

Construction shall consist of furnishing all materials and constructing manholes or vaults complete in place, as detailed, including foundation walls, cast iron steps, frames, covers, and any incidentals thereto, at location shown on the plans.

Manholes shall be constructed to conform with the requirements of Section 625 and standard details, except the inside diameter shall be 60 inches.

Vaults shall be constructed of reinforced concrete conforming to Section 725 and of concrete pipe conforming to ASTM C76 Wall A or B. Vaults shall be kept moist for 7 days before backfilling.

~~610.9~~ 610.10 FIRE HYDRANTS:

The Contractor shall furnish all labor, materials, and equipment necessary to install fire hydrants complete in place at locations shown on the plans in accordance with the standard details and special provisions. Fire hydrants furnished by the Contractor shall conform to the requirements of Section 756.

If paint is chipped, scuffed, or otherwise damaged during handling and installation, the Contractor shall touch up such spots as may be designated by the Engineer.

All hydrants must be flushed and left in good working condition with the control valve open.

~~610.13~~ 610.11 COUPLINGS, JOINTS, GASKETS AND FLANGES:

(A) Couplings: The couplings used to join the pipe to flanged valve adapters shall have a minimum working pressure of 150 psi, and shall have a fusion-bonded epoxy finish. The coupling sleeves shall be carbon steel with a minimum yield of 30,000 psi. The flanges shall have a minimum yield of 30,000 psi and be ductile iron or carbon steel for sizes up to 12", or high-strength, low-alloy steel for sizes 14" and larger.

(B) Joints: The joints and fitting shall conform to Sections 750 and 752.

(C) Bolts and Nuts:

(1) Bolts, studs, and nuts used in underground field flanged connections or for connecting fittings shall be carbon steel compliant with ASTM A307, Grade A unless Grade B is specified. Bolts, studs, and nuts shall be in accordance with AWWA C111. Bolts and studs shall have Class 2A thread tolerance with the corresponding nuts having Class 2B tolerance. Bolts, studs and nuts shall have a hot-dipped zinc coating in accordance with ASTM F2329. All bolt diameters shall normally be 1/8 inch smaller than the bolt hole diameter. If specified, allowable exceptions to zinc coating shall be bolts, studs, and nuts made from 316 stainless steel per ASTM F593 or cadmium plated per ASTM B766. All bolts shall be hexagonal heads.

(2) The minimum requirement for underground mechanical joint connections using T-head bolts shall meet the requirements of AWWA C111 using a high strength low alloy steel manufactured for atmospheric corrosion resistance per ASTM A242.

These bolted joints shall be protected as follows: Following installation and before backfilling, all couplings, steel flanges, bolts, nuts, anchor bolts and rods, bolting of all flanged valves, and all exposed steel shall be protected from corrosion by either of the two methods outlined below at the Contractor's option.

(A) Below ground installations shall be coated with NO-OX-ID "A" with a film of not less than 1/32 inch thick and then coated with cement mortar not less than 1 inch thickness before backfilling. Cement mortar shall be composed of 1 part cement, ASTM C150, Type II, low alkali, to 3 parts sand. Before application of the cement mortar coating the area to be protected shall be covered with a layer of 2 x 2 inch No. 14 gage welded wire fabric, firmly wired in place.

(B) Below ground installations shall be protected by the application of hot coal-tar enamel. The coal-tar enamel shall be in accordance with AWWA C-203 and shall be applied to the top part of the pipe or fittings by daubers for at least 2 coats for a total minimum thickness of 1/16 inch. The coal-tar for under side of the pipe flanges or fittings shall be applied by the pan or cocoon method as described below and in AWWA Manual M-11, Steel Pipe.

Pan Method: The coating pan is securely anchored in place on the underside of the pipe and straddling the connection to be coated. The pan shall be wide enough so that the entire connection will be coated.

Hot coal-tar enamel is poured into the pan, from one side only, until the pan is completely filled. The drain plug or valve, is then opened and the excess coal-tar drained out. The pan can then be removed. Details of the coating pan and corresponding dimensions are given in AWWA Manual M-11.

The upper portion of the connection, and all remaining exposed steel pipe, will then be coated by the use of a dauber. The coal-tar coating shall be applied in at least 2 coats for a minimum thickness of 1/16 inch. The daubers and method of application shall conform to AWWA C-203. No thinning will be allowed.

(C) Cocoon Method: The cocoon is formed by placing glass fiber cloth or roofing paper, of the proper width, around the underside of the connection and adjacent exposed steel pipe. The edges of the cocoon shall be securely fastened to the pipe. Backfill is lightly placed to the spring line, and the top of the cocoon is opened and layed back on the filled area and hot coal-tar enamel poured, from one side only, until the cocoon is completely filled. The loose backfill prevents rupture of the cocoon. The upper portion of the connection and remaining exposed steel pipe shall be coated as above.

(D) Gaskets: Except as otherwise provided, all gaskets for pipe lines shall be one piece full faced gaskets from one-ply cloth inserted SBR rubber material. Gaskets for flanges 20 inches and smaller shall be from 1/16 inch thick material. Gaskets for flanges 24 inches and larger shall be from 1/8 inch thick material. Gasket material shall be J-M 109 as manufactured by Johns-Manville Corporation or an approved equal. Physical characteristics of the rubber compound shall meet ASTM D2000, Class 4AA805A13.

(E) Flanges: Cast iron flanges shall conform to AWWA C-110 as to material, diameter, thickness, drilling, etc. Steel flanges shall be ring or hub type, and shall conform to AWWA C-207, Class D. All flanges shall be drilled and have flange diameters and bolt circles conforming to AWWA C-110, except bolt holes will be 1/8 inch larger than the bolts given for the various sizes. All bolts shall be as specified above and all flanges shall have a flat facing.

~~610.16~~ 610.12 DISINFECTING WATER LINES:

After pressure testing and before placing in service, all water lines shall be disinfected. Disinfection shall be accomplished in accordance with Section 611. All valves in the lines being disinfected shall be opened and closed several times during the 24 hour period of disinfection.

~~610.10~~ 610.13 CONNECTION TO EXISTING MAINS:

Existing pipe to which connections are to be made shall be exposed by the Contractor as directed by the Engineer, to permit field changes in line, grade or fittings, if necessary.

All connections to existing mains shall be constructed according to the plans.

Valves connecting new work to the existing system shall be kept closed at all times.

Only Agency personnel shall operate existing valves. The Contractor shall not operate valves in the existing system.

After disinfected samples have been taken and the new work passes the bacteriological tests, the new line shall then be turned over to the Contracting Agency with all branch lines and tie-in valves closed.

When shutdown of an existing water main is necessary in order to connect to the new lines, the Contractor shall make application and pay the required charges to the Contracting Agency. A conference between the Contractor's representative, Engineering Inspection, and Water Distribution personnel shall establish the time and procedures to insure that the shutdown will be for the shortest possible time. If necessary to minimize inconvenience to customers, shutdowns may be scheduled during other than normal working hours. The water supply to some customers, such as hospitals, cannot be shut off at any time. Provisions to furnish a continuous supply of water to such establishments will be required. After the procedures and time for a shutdown are agreed upon, it shall be the Contractor's responsibility to notify all customers in advance that the water will be turned off. When possible, customers shall be notified 24 hours in advance and in no case, except in emergency, shall notification be less than 30 minutes. Notification shall be in writing, giving the reason for the shutdown and the time and duration the water service will be shut off.

The Contracting Agency will close existing valves, but will not guarantee a bone-dry shutdown.

~~610.12~~ 610.14 FIRE LINE SERVICE CONNECTIONS:

Fire line service connections shall be installed in accordance with standard details.

The fire line from the control valves at the main to the detector check valve shall be constructed of ductile iron pipe per Section 750.

~~610.11~~ 610.15 METER SERVICE CONNECTIONS:

All new meters must be installed by the Contracting Agency after the proper application as required by Code with fees paid at prevailing rates.

When plans call for connections from a new water main to an existing water meter, the work shall include new copper pipe and fittings except as follows:

(A) Wrapped galvanized pipe shall be used to connect or extend existing galvanized service pipe. Type K soft copper pipe or tubing shall be used to connect or extend existing copper service pipe except when otherwise called for in the plans.

(B) When the existing main is not abandoned, and the existing meter is to be connected to the new line, the corporation stop at the old main shall be closed and the abandoned service line cut 6 inches from the old main.

(C) Taps and service connections to the new main shall be made prior to testing and disinfection of the new line.

(D) Meter service piping may be installed by drilling in place of open cut construction when approved by the Engineer.

When called for on the plans, the meter and box shall be relocated by the Contractor as directed by the Engineer. Existing meters which are shown on the plans to be relocated shall be located and installed in accordance with standard details.

Water meter boxes which are broken during construction shall be replaced by the Contractor at no additional cost to the Contracting Agency. Existing meter boxes which are already broken prior to start of construction shall be replaced by the Contractor with boxes furnished by the Contracting Agency. Boxes may be picked up by the Contractor after written authorization is received from the Engineer. The written authorization shall include the street address of each broken meter box and the size of meter box required. All water meter boxes shall conform to the standard details.

~~610.15~~ (Move to Section 611.1) ~~HYDROSTATIC TESTING:~~

~~Water lines, including all fittings and connections to the water mains shall be tested for watertightness by subjecting each section to hydrostatic testing in accordance with applicable provisions of AWWA C-600, except as modified below, and shall consist of pressure testing and allowance testing.~~

~~The test section shall be slowly filled with potable water and all air shall be vented from the line. The rate of filling shall be as determined by the Superintendent of Water Distribution, with at least 24 hour notice required before tests are scheduled.~~

~~The Contractor shall provide all vents, piping, plugs, bulkheads, valves, bracing, blocking, pumps, and measuring devices and all other equipment necessary for making the tests, including pressure gages, and shall pay the Contracting Agency for water used in the tests.~~

~~Hydrostatic Testing: Pressure testing may be made before or after backfilling, but backfilling must be completed before allowance testing. If the pipe is center loaded, a visual inspection for leaks may be made along the pipe line while the test section is under test pressure, and all visible leaks repaired. However, if mechanical compaction is to be used in the backfilling operations as spelled out in AWWA C-600, the tests shall not be made until the backfilling is completed and compacted. Backfill and compaction for the full distance encompassed by restrained/welded joints shall be completed prior to testing. All connections, blowoffs, hydrants and valves shall be tested with the main as far as is practicable. Hydrostatic testing shall not begin until the pipe has been filled with water for at least 24 hours to allow for air venting.~~

~~(A) Pressure Testing: Unless otherwise noted in the contract documents, the minimum prescribed test pressure shall be at least 200 psi for lines smaller than 16 inches and 150 psi for lines 16 inches or larger, not to exceed 5 psi over the minimum~~

~~prescribed test pressure, as measured at the lowest end of the section under test. The duration of each pressure test shall be at least 2 hours, during which time the test section shall not drop below the minimum prescribed test pressure. If the pressure in the pipe test section has not stabilized by the end of the testing period, a hydrostatic retest will be required.~~

~~Each section of a new line between sectionalizing valves or between the last sectionalizing valve and the end of the project shall be tested separately as required in AWWA C 600, and/or as modified in these specifications, except that any such section less than 500 feet in length may be tested with the adjacent section, if both sections of line have the same pipe class rating. No section greater than 1/2 mile in total pipe length shall be tested without special written permission of the Engineer.~~

~~(B) Testing Allowance/Makeup Water: Makeup water volume shall be determined after the pressure test has been satisfactorily completed and all backfilling and compaction has been completed to top of trench. Testing allowance shall be defined as the maximum quantity of makeup water necessary to be supplied into the pipe line section under test to restore the ending test pressure to the beginning test pressure, after the pipe line has been filled with water and all air expelled. The Contractor shall furnish the necessary apparatus and assistance to conduct the test.~~

~~The duration of each makeup water test shall be at least 2 hours. To pass the allowance testing, the quantity of makeup water from the pipe line shall not exceed the makeup water quantity allowed by the following formula, from AWWA C-600:~~

$$M = \frac{SD\sqrt{P}}{148{,}000}$$

~~in which~~

~~M = testing Allowance (makeup water), in gallons per hour.~~

~~S = length of pipe tested, in feet~~

~~D = nominal diameter of pipe, in inches.~~

~~P = test pressure of the pipe being tested, per 610.15 (A)~~

~~Should the test on any section of the pipe line require more makeup water than allowed by the above formula, the Contractor shall locate and repair the defective pipe, fittings, or joint until the makeup water volume is within the specified allowance. All repairs and retests, if required, shall be made at the Contractor's expense.~~

~~Connections to the existing pipelines or existing valves shall not be made until after that section of new construction has satisfactorily passed the hydrostatic tests.~~

~~Ductile iron pipe used in conjunction with ACP will be tested to the ACP standards, unless otherwise directed by the Engineer. High pressure systems of all ductile iron pipe will be tested in accordance with AWWA C-600, Section 4.1.~~

~~610.18~~ 610.16 CLEANUP:

When testing, chlorination, compaction, and cleanup do not follow pipe laying in an orderly manner, the Engineer reserves the right to close down trenching and pipe laying until these operations are adequately advanced.

610.17 PAVEMENT AND SURFACING REPLACEMENT:

Pavement and surfacing replacement shall be in accordance with the requirements of Section 336.

~~610.19~~ 610.18 MEASUREMENT AND PAYMENT:

(A) Pipe:

(1) Measurement of all pipe shall be of the linear feet of pipe installed, measured along the centerline of the pipe, through all valves and fittings, from the centerline of the fittings or centerline of valves on ends of pipe to the centerline of fittings, centerline of valves on ends of pipe or to the end of pipe, as the case may be, for all through runs of pipe. Measurement shall be to the nearest 0.1 foot.

Revised 2014

Measurement of branch line pipe shall start at the centerline of valve at connection to the main. Branches of tees that are valued and capped will not be measured.

Measurement of meter service pipe shall be from the centerline of the new main to the connection at the meter, along the centerline of service pipe.

(2) Payment will be made at the unit price bid per linear foot of each type and size of pipe called for in the proposal. Such payment shall be compensation in full for furnishing and installing the pipe and fittings, specials, adapters, etc., complete in place, as called for on the plans and/or on the standard details, and shall include all costs of excavation, removal of obstructions, shoring and bracing, bedding, backfilling, compaction, maintenance of traffic, testing, disinfecting, connections to existing lines or works, and all work not specifically covered in other pay items.

A contingent item for fittings not shown on the plans shall be included in the proposal. Payment will be made at the unit price bid per pound on the theoretical weight of the fittings installed, which shall be compensation in full for furnishing and installing the fittings.

(1) Service Connection To Existing Water Meters: Measurement shall be of the number of unit connections made for water meter services, as called for in the proposal. Each proposal item unit shall consist of the connection to the water main and to the meter, as required in standard details.

(2) Payment will be made at the unit price bid for each unit water meter service connection and shall be compensation in full for labor materials (other than pipe) equipment, tapping, and all necessary incidentals. Payment for new service pipe required to make the connection will be made separately, as stipulated above.

(B) Relocation of Existing Meters and Boxes: Measurement shall be of the number of meters and boxes moved and reinstalled. Payment will be made at the unit price bid in the proposal for each meter and box relocated and installed.

(C) Permanent Pipe Supports and Encasement of Existing Pipes: Measurement shall be of each unit included in the proposal, and payment shall be compensation in full for supporting or encasing existing pipe, as required on the plans, including excavation, form work, reinforcing, concrete, handling and controlling flows in the existing pipe, removing and replacing existing pipe where necessary, supporting, backfilling and compaction, and pavement and/or surfacing replacement required in excess of pay width(s) allowed in Section 336.

(D) Concrete Thrust Blocks: Concrete thrust blocks and anchors for all pipe 16 inches and larger shall be measured by the cubic yard(s) of concrete placed, as required on the plans and/or as directed by the Engineer. Payment will be made at the unit price bid per cubic yard, and shall be compensation in full for excavation, formwork, placing and finishing concrete, reinforcing, backfilling and compaction, and pavement and/or surfacing replacement required in excess of pay width(s) allowed in Section 336. All thrust blocks and anchors for 12 inches and smaller pipe shall be included in the linear foot cost of the pipe.

(E) Valves: Measurement of and payment for valves, tapping sleeves and valves, and valve boxes shall be for each item furnished and installed, as designated in Section 630.

(F) Fire Hydrants: Measurement shall be the number of fire hydrants installed. Payment will be at the unit price bid for the installation of each fire hydrant complete in place and in operating condition. The 6 inches cast iron pipe and fittings, required for making the connection from the main to the hydrant, shall be a separate pay item in the proposal as described above.

(H) Pavement and/or Surfacing Replacement**:** Payment for pavement and/or surfacing replacement will be made as stipulated in Section 336, except as otherwise established in this specification. The cost of pavement and/or surface replacement required for meter service installations shall be included in the price bid for meter service pipe.

- End of Section -

Table 1 Polyethylene tube and sheet sizes for push-on joint pipe*

Nominal Pipe Diameter		Minimum Polyethylene Width—*in. (cm)*			
in.	*(mm)*	Flat Tube		Sheet	
3	(76)	14	(36)	28	(71)
4	(102)	14	(36)	28	(71)
6	(152)	16	(41)	32	(81)
8	(203)	20	(51)	40	(102)
10	(254)	24	(61)	48	(122)
12	(305)	27	(69)	54	(137)
14	(356)	30	(76)	60	(152)
16	(406)	34	(86)	68	(173)
18	(457)	37	(94)	74	(188)
20	(508)	41	(104)	82	(208)
24	(610)	54	(137)	108	(274)
30	(762)	67	(170)	134	(340)
36	(914)	81	(206)	162	(411)
42	(1,067)	81	(206)	162	(411)
48	(1,219)	95	(241)	190	(483)
54	(1,400)	108	(274)	216	(549)
60	(1,500)	108	(274)	216	(549)
64	(1,600)	121	(307)	242	(615)

*These wrap sizes should work with most push-on joint pipe and fitting bell sizes. Where bell circumferences are larger than the sheet sizes shown, the bell areas should be carefully wrapped with cut film sections, effectively lapping and securing cut edges as necessary; or, alternatively, sufficiently large tube or sheet film to effectively cover these joints should be ordered.

b. Year of manufacture.

c. ANSI/AWWA C105/A21.5.

d. Minimum film thickness and material type (LLDPE or HDCLPE).

e. Applicable range of nominal pipe diameter size(s).

f. Warning—Corrosion Protection—Repair Any Damage.

4.3.2 *Marking height.* Letters and numerals used for marking items *a* through *e* in Sec. 4.3.1 shall not be less than 1 in. (25 mm) in height. Item *f* in Sec. 4.3.1 shall be not less than 1½ in. (38 mm) in height.

Sec. 4.4 Installation

4.4.1 *General.* The polyethylene encasement shall prevent contact between the pipe and the surrounding backfill and bedding material, but it is not

Table A.1 Soil-test evaluation

Soil Characteristics Based on Samples Taken Down to Pipe Depth		
Resistivity—ohm-cm (based on water-saturated soil box):		Points*
	<1,500	10
	≥1,500–1,800	8
	>1,800–2,100	5
	>2,100–2,500	2
	>2,500–3,000	1
	>3,000	0
pH:		
	0–2	5
	2–4	3
	4–6.5	0
	6.5–7.5	0†
	7.5–8.5	0
	>8.5	3
Redox potential:		
	> +100 mV	0
	+50 to +100 mV	3.5
	0 to +50 mV	4
	Negative	5
Sulfides:		
	Positive	3.5
	Trace	2
	Negative	0
Moisture:		
	Poor drainage, continuously wet	2
	Fair drainage, generally moist	1
	Good drainage, generally dry	0

*Ten points or greater indicates that soil is corrosive to ductile-iron pipe; protection is needed. Refer to paragraph A.3 for a description of Uniquely Severe Environments and additional considerations.

†If sulfides are present and low (<100 mv) or negative redox-potential results are obtained, add three points for this range.

Date: 6/11/14

To: MAG Specifications and Details Committee

From: Brian Gallimore, Materials Working Group

Subject: Revision to Section 310 Placement of Construction of Aggregate Base Course

Case 14-16

Revised 2014-06-11

Purpose: Changed rock method correction to be consistent with Section 301.

Revisions: See the attached redlined strike-out version of the specification.

PLACEMENT AND CONSTRUCTION OF AGGREGATE BASE COURSE

310.1 DESCRIPTION:

Aggregate base course shall comply with Section 702 unless the use of a different type of material is specifically authorized in the special provisions.

310.2 PLACEMENT AND CONSTRUCTION:

The compacted lift thickness shall not exceed 6 inches, unless approved by the Engineer. Based on the type of material, type of equipment and compaction methods used, the Contractor may propose a greater lift thickness to the Engineer for approval.

After distributing, the aggregate base course material shall first be uniformly watered and then graded to a uniform layer that will net, after compacting, the required thickness. The grading operation shall be continued to such extent as may be necessary to minimize segregation. The quantity of water applied shall be that amount which will assure proper compaction resulting in the density required by Section 310.3.

After placement, the aggregate base course surface shall be true, even and uniform conforming to the grade and cross-section specified. In no case shall the aggregate base course vary by more than ½ inch above or below required grade.

310.3 COMPACTION

The contractor is responsible for providing appropriate equipment and techniques to achieve the compaction results required by this specification. The aggregate base course shall be compacted in lift thicknesses as allowed by Section 310.2.

The laboratory maximum dry density and optimum moisture content for the aggregate base course material shall be determined in accordance with AASHTO T-99. (Note: when testing base materials – use method “C” or “D” as required based upon the gradation of the material.) Field ‘one-point’ maximum dry density and optimum moisture procedures shall only be allowed upon approval of the Engineer.

The in-place density shall be determined in the field by nuclear density testing in accordance with AASHTO T-310 or sand cone density testing in accordance with AASHTO T-191. In the event nuclear density testing is selected, and density results are in question, a sand cone correlation will be performed by the accepting agency at the contractor’s request, not to exceed one sand cone for each ten nuclear density tests.

A rock correction, to compensate for rock content larger than the #4 or ¾ inch sieves (as required by the laboratory maximum dry density and optimum moisture procedure selected), shall be performed in accordance with AASHTO T-224. Care should be taken to account for the specific gravity of the oversize particles particularly if recycled materials are utilized for aggregate base course. The specific gravity shall be determined in accordance with ~~AASHTO T~~ ARIZ-227C, as applicable.

For roadway construction, a minimum of one field density test shall be performed per lift per 660 feet per lane. For other aggregate base course applications, a minimum of one field density test shall be performed for each 800 square yards.

Unless otherwise noted in the project plans or project specifications, the moisture content of the aggregate base course at the time of compaction shall be the optimum moisture content +/- 3%.

The following percent compaction is required:

(A) Below asphalt concrete pavement	100%
(B) Below Portland cement concrete pavement, driveways, curb & gutter, sidewalks, and roadway shoulders	95%
(C) All other areas not subject to vehicular traffic	85%

SECTION 322
ASPHALT STAMPING

322.1 DESCRIPTION:

The work under this item will provide stamped asphalt which shall include surface patterning and/or asphalt surfacing (painting) as described herein in accordance with ~~TOG~~ Owners Standard Details and/or as shown on the plans and called out in the special provisions.

322.2 GENERAL REQUIREMENTS:

A Contractor shall meet the following qualifications in order to perform asphalt stamping ~~in the TOG~~:

> The Contractor shall have completed a minimum of three (3) asphalt stamping projects in the past year (from the date of bid) in the State of Arizona and totaling at least 50,000 S.F. The Contractor shall furnish evidence of meeting these experience requirements to the ~~Town Inspector or designee~~ Engineer.

The Contractor shall submit for review and approval all manufacturer product and technical data for materials proposed to be installed in the right-of-way. The Contractor shall also submit for review and approval a sample of the stamped asphalt material prior to installation. These submittals shall be to the Town's Inspector or designee.

Prior to acceptance of the project, the Contractor shall repair all damaged or unsuitable areas, as determined by the ~~Town's Inspector or designee~~ Engineer, at no expense to the ~~Town~~ Owner.

322.3 MATERIALS:

322.3.1 Asphalt Concrete: All roadway construction materials and asphalt thicknesses shall conform to the applicable requirements of MAG Section 321 and the project plans and specifications. Aggregate base course (ABC) shall be clean, well-graded sand and gravel compacted and placed per MAG Section 321.5.1 and the project plans and specifications.

For raised medians and other areas not subject to vehicular traffic, the surface course shall be at least 2-1/2" of EVAC R-1/2 or MAG 3/8" asphalt concrete mix in accordance with MAG 710 with the asphalt meeting a minimum of 95% compaction. In addition, the subgrade for raised medians shall be a minimum of four (4) inches of ABC meeting 95% minimum compaction. ABC shall conform to MAG Section 702.

322.3.2 Surface Patterning: The patterning equipment shall be metal templates that shall correspond to the patterns shown in ~~TOG Details GIL 250 and GIL 251 [old 402, 403A, 403B, and 404]~~ Owner's standard details or as shown on the plans and called out in special provisions. Refer to the project plans and specifications for the pattern type to be used.

322.3.3 Surfacing System (Painted Asphalt): All products used in the surfacing system shall meet the minimum physical and performance properties in Tables 322-1 and 322-2. The Contractor shall submit a

Certificate of Compliance to the ~~Town's Inspector or designee~~ Engineer indicating that the materials to be included in the work meet these specification requirements. The color used for painted asphalt shall be terracotta or as approved by the ~~Town Inspector or designee~~ Engineer.

TABLE 322-1		
ASPHALT STAMPING SURFACING SYSTEM PHYSICAL PROPERTIES		
Characteristic	**Test Specification**	**Base**
Solids by Volume (%)	ASTM D2697	55%
Solids by Weight (%)	ASTM D2369	68%
Density	ASTM D1475	13.0 lbs/gal

TABLE 322-2		
ASPHALT STAMPING SURFACING SYSTEM PHYSICAL PROPERTIES		
Characteristic	**Test Specification**	**Test Result**
Dry-Time (To Recoat)	ASTM D5895	35 Min
Taber Wear Abrasion Dry H-10 Wheel	ASTM D4060 1 day cure	0.98 g/1000 cycles
Taber Wear Abrasion Wet H-10 Wheel	ASTM D4060 7 days cure	3.4 g/1000 cycles
QUV E Accel.	ASTM G154 Delta	0.53
HydrophobicityWater Absorption	ASTM D-570	8.3 %(9 Day Immersion)
Shore Hardness	ASTM D2240	63 Type D
Mandrel Blend	ASTM D522-93A	1/4" @ 21 Degree C Pass
Permeance	ASTM D1653	3.77 g/m2 /hr (52 mils)
VOC	Per MSDS	23 g/l
Adhesion to Asphalt	ASTM D4541	Substrate Failure
Friction Wet	ASTM E303 British Pendulum Tester	WP * Coated- 62 WP* Uncoated - 57 AC ** Coated - 70 AC ** Uncoated - 60

322.4 INSTALLATION:

322.4.1 Asphalt Concrete: All asphalt concrete construction materials shall be transported to the job site in clean trucks and in a manner to prevent segregation of materials or inclusion of foreign substances. During transport, the hot-mix asphaltic concrete shall have a minimum temperature of 285° F and a maximum temperature of 350° F.

The hot-mix asphaltic concrete shall be placed per the project plans and specifications. The hot-mix asphaltic concrete shall be placed on a dry base course and when the ambient temperature in the shade is 45° F and rising. The hot-mix asphaltic concrete shall not be placed when the weather is foggy, rainy, or when the base course is wet or frozen.

The Contractor shall contact the ~~Town's Inspector~~ Engineer for roadway compaction approval prior to beginning asphalt stamping. Asphalt shall be fully compacted prior to positioning the patterning template.

322.4.2 Surface Patterning: After application and compaction of the asphaltic concrete, while it is still hot, templates shall be positioned on the surface in the required orientation. Templates shall be set in place using a plate compactor and fully embedded using the same compaction equipment used in placing the asphalt (minimum static weight shall be 700 lbs.

The template print depth shall be 3/8" over 99% of the patterned area. All hand tooling shall be complete, full depth, straight in manner, and to the edge of the asphalt pavement, common edge, concrete curb, gutter, or other border. There shall be no overprint of patterns and no remnants of excess print on surrounding unintended areas.

322.4.3 Surfacing System (Painted Asphalt): The air temperature shall be at least 50° F and rising before the application of surface system products begins. There shall also be no precipitation expected within 24 hours of the anticipated surfacing completion in order for the application to be authorized by the Town.

The surfacing system products shall be spray-applied. Where required to cover small areas, the surfacing system may be painted on using brooms or brushes. When complete, the entire asphalt surface shall be covered with the surfacing product with no exposed asphalt present.

The Contractor shall use sufficient masking to ensure that the surface system products are applied only where specified. Masking shall be complete and no overspray onto surfaces not designated as coated surfaces shall be allowed.

The Contractor shall apply the surface system products with a minimum of four complete passes on a roadway surface. Three complete passes shall be allowed on medians, walkways, pathways, and bike paths where traffic is primarily pedestrian with minimal or no automobile traffic. Thickness of the surfacing product shall be 20 mils or greater.

After the surfacing system products have been applied, the treated asphalt shall not be exposed to vehicular traffic for eight (8) hours, overnight, or as approved by the ~~Town Inspector or designee~~ Engineer.

322.5 MEASUREMENT:

Asphalt stamping shall be measured by the square foot, which shall include surface patterning and/or asphalt surfacing (painting).

322.6 PAYMENT:

Asphalt stamping shall be measured as provided above shall be paid for at the contract price per square foot which price shall be full compensation for the item complete as described and specified herein.

MARICOPA COUNTY
Department of Transportation

MEMORANDUM

Date: July 2, 2014

To: MAG Specifications and Details Committee

From: Robert Herz, MCDOT Representative

Subject: Revision to Section 340 **Case 14-18**

PURPOSE: **1.** Change the term "sidewalk ramp" in section 340 to "curb ramp" and to conform to ADA nomenclature and the various 235 Details.
2. Modify the second paragraph of section 340.5 to prevent confusion regarding the curb and gutter pay item associated with valley gutters (Detail 240).

REVISION: **1.** Change all occurrences of the term "sidewalk ramp" in section 340 to "curb ramp"

2. Modifying the second paragraph of Section 340.5 as shown:

"Curb and gutter type shall be based on the configuration of the final exposed surfaces. The increased curb and gutter depth required at valley gutter aprons or driveways shall not be measured as a separate **type of curb and gutter** ~~pay item~~; any additional Contractor cost **for increased depth or other modification** shall be included in the unit cost associated with the valley gutter, driveway**, curb ramp** or other associated item."

Final form for the second paragraph of Section 340.5:

"Curb and gutter type shall be based on the configuration of the final exposed surfaces. The increased curb and gutter depth required at valley gutter aprons or driveways shall not be measured as a separate type of curb and gutter; any additional Contractor cost for increased depth or other modification shall be included in the unit cost associated with the valley gutter, driveway, curb ramp or other associated item."

Report to MAG Technical Committee
Meeting June 26, 2014
Asphalt and Materials Working Group meetings
By Chairmen, Jeff Benedict, Brian Galimore

The meeting was held on noon on June 26, 2014 at the ARPA offices.
Present at the meeting: Brian Gallimore (WSP), Greg Groneberg (S.W. Asphalt), Brad Parker, (Mesa Materials), Margie Torres (Peoria), Syd Anderson (City of Phoenix), Jeff Hearne (SRMG), Katrina Lynch (MeadWestvaco), Brandon Milar (MeadWestvaco) and Gordon Tyus (MAG).

Cases for submittal:
Case 14-06 revisions to section 718 table718-1.
Sam Huddleston was not present at the meeting to review this case.

Case 14-13 MCDOT supplement to MAG 321
The case was reviewed and a couple of questions were raised. The first is on 321.10 "Acceptance Criteria" and the definition of "Lot size" in the rewrite. It was confusing. Next was in section 321.10.4 "Asphalt pavement thickness" This section need a "total" in the first addition after the word Owner and (insert total) of added verbiage. This eliminates confusion on each lift or total lifts. The final comments were in section 321.11 "Referee" The working group had concerns that the final sentence was eliminated. This was viewed a adding unnecessary confusion. The sentence reads: "The result of these determinations will be binding on both the contractor and the agency". The working group applauds MCDOT for this effort. The case is pretty clear otherwise.

Case 14-10 changes to 321and 710 to allow the use of Warm mix asphalt.
There were typos identified to be corrected. One sentence was moved to the end of a paragraph. The final draft will be sent to the main committee.

Case 14-12 MCDOT submitted this case for "Pavement removal" and to prevent joints along pavement wheel paths. The case was discussed and it was deemed very confusing. Brian Gallimore will look to clarify and recommend changes to the included language to improve the meaning. This case as written did not gather the working groups support.

Case 14-16 "rock correction Factor" as determined by the ADOT "Arizona" method was inserted rather than the AASHTO method

There was general discussion on the Type "N" lime and it was determined that there was no issue or case needed.

The next working group meeting will be held on 8-21-2014 at the ARPA office at noon.
This meeting was adjourned at 1:40PM

MAG Concrete Working Group

Meeting Notes

Thursday, June 26, 2014, 1:00 pm at the ARPA Offices

Present:

See attached attendance sheet.

Discussion:

1) Discussion regarding minor changes to Section 324 – scheduled for a vote at the next Standards Meeting on July 9.

Date for Next Meeting:

The next meeting is scheduled for **August 21, 2014 @ 1:00 pm** in the ARPA offices.
(Following the Asphalt and Materials Working Group meetings)

Any and all participants are welcome and encouraged to be involved.

Attendance

MAG Concrete Working Group

Thursday, June 26, 2014

Initials					
GT	Gordon Tyus	MAG	Maricopa Association of Governments	602-254-6300	GTyus@azmag.gov
	Bob Herz	McDOT	Maricopa County	602-506-4760	rherz@mail.maricopa.gov
	John Shi	McDOT	Maricopa County		johnshi@mail.maricopa.gov
	Jacob Rodriguez	Utility	Salt River Project	602-236-8613	jacob.rodriguez@srpnet.com
SA	Syd Anderson	Municipality	City of Phoenix	602-495-2047	syd.anderson@phoenix.gov
	Richard Soltero	Municipality	City of Phoenix	602-495-2063	richard.soltero@phoenic.gov
	Don Hansen	Municipality	City of Chandler	480-215-9264	don.hansen@chandleraz.gov
	Bob Draper	Municipality	City of Mesa	480-644-3822	bob.draper@mesaaz.gov
	Rob Godwin	Municipality	City of Goodyear	623-693-2457	rob.godwin@goodyearaz.gov
	Brandon Forrey	Municipality	City of Peoria	623-773-7201	brandon.forrey@peoriaaz.gov
MT	Margie Torres	Municipality	City of Peoria		margarita.torres@peoriaaz.gov
BG	Brian Gallimore	Contractor	WSP Inc	623-434-5050	bgallimore@wspinc.net
JH	Jeff Hearne	Producer	Salt River Materials Group	480-850-5757	jhearne@srmaterials.com
	Mike Kohout	Producer	Cemex	602-220-5631	mkohout@cemexusa.com
	Robert Barkley	Producer	Hanson Aggregates of Arizona	602-685-3436	robert.barkley@hansen.biz
	Tom Romero	Producer	CPC Southwest Materials	520-744-3222	tromero@calportland.com
	Adrian Green	Producer	Vulcan Materials	602-528-8692	greenaj@vmcmail.com
	Tom Villa	Producer	Rock Solid Concrete	602 339-7375	tvilla@rocksolidconcrete.com
	John McClafferty	Producer	Drake Materials	602-881-1650	jmcclafferty@drakeus.com
	Angelo Trujillo	Producer	BASF Admixtures	480-824-3733	angelotrujillo@cox.net
	Derek Imperial	Producer	BASF Admixtures	480-993-6948	derek.imperial@basf.com
	Greg Dorsch	Producer	BASF Admixtures	480-363-5646	greg.dorsch@basf.com
	David Allen	Producer	Boral Materials	602-861-5100	david.allen@boral.com
JB	Jeff Benedict	Producer	Valero Energy Corp	602-989-6121	Jeff.Benedict@valero.com
	Sam Huddleston	Producer	Western Refining		sam.huddleston@wnr.com
GG	Greg Groneberg	Producer	Southwest Asphalt		ggroneberg@fisherind.com
	Matthew Marcus	Testing Laboratory	Ninyo & Moore	602-243-1600	mmarcus@ninyoandmoore.com
	William Smith	Testing Laboratory	Terracon	480-897-8200	whsmith@terracon.com
	Scott Thompson	Testing Laboratory	Cardno ATC	602-290-0840	scott.thompson@cardno.com
	Bob Kostelny	Testing Laboratory	Cardno ATC	480-244-4350	robert.kostelny@cardno.com
	Don Cornelison	Testing Laboratory	Speedie and Associates	602-997-6391	dcornelison@speedie.net
	Raphael Tixier	Testing Laboratory	Western Technologies Inc.	602-437-3737	r.tixier@wt-us.com
	Mike Whitman	Testing Laboratory	Western Technologies Inc.	602-437-3737	mike.w@wt-us.com
	Phillip Feliz	Testing Laboratory	Western Technologies Inc.	602-437-3737	phil.f@wt-us.com
	Peter Kandaris	Consultant	DGA	602-236-8613	pkandaris@dgacon.com
	Steve Trussel	ARPA	Arizona Rock Products Association	602-271-0346	steve@azrockproducts.org
	Dan Duffy	ARPA	Arizona Rock Products Association	602-271-0346	dan@azrockproducts.org
BP	Brad Parker	Producer	Mesa Materials		bparker@mesamaterials.com
KL	Katrina Lynch	Producer	MeadWestVaco		katrina.lynch@mwv.com
BM	Brandon Milar	Producer	MeadWestVaco		brandon.milar@mwv.com

Water/Sewer Working Group Meeting

Meeting Notes
June 17, 2014

Opening:
A meeting of the Specifications and Details Water/Sewer Working Group was called to order by chair Jim Badowich on May 20, 2014, at 1:36 p.m. in the MAG Chaparral Room.

1. Introductions/Attendance
Tony Ayala (Avondale), Jim Badowich (Avondale), Jeff Buckley (ADS), Arturo Chavarria (Hanson), Jami Erickson (Phoenix), Brian Gallimore (AGC), Matthew Houser (Contech) *via audio*, Jason Jackson (Oldcastle), Daniel Kiel (Peoria), Mike Molina (Oldcastle), Craig Sharp (Buckeye), Gordon Tyus (MAG), Arvid Veidmark (Specialized Services), Stew Waller (Rinker), Warren White (Chandler)

2. Manhole Revisions/Update (Cases 13-21 and 13-22)
Craig Sharp handed out revisions based on feedback from Maricopa County and comments during the last committee meeting. These changes included allowing for storm drain manholes, and incorporating (via Jeff Hearne) the correct concrete materials reference in Section 742 and several updates to the detail drawings. Mr. Sharp reviewed the changes to the drawings. Jim Badowich commented that he would like to update Section 625 to better describe the cast in place base and construction methods. Jami Erickson said that Phoenix is going to leave the text for brickwork in their supplement to Section 625 since they often have to repair brick manholes. Jim Badowich suggested leaving the language in with the caveat beforehand stating, "If brickwork is allowed by the agency for repairs…" Members agreed that 625.3.2 Drop Sewer Connections should reference Detail 426. Brian Gallimore said he wanted Phoenix's supplement to Detail 422 Manhole Frame to also round-off the edge of the concrete collar for areas outside the roadway. Craig Sharp said he would incorporate Phoenix brick supplement and run it by Bob Herz. He plans to incorporate changes for the next meeting, review it, and hopefully vote on the case during the August meeting.

3. Revisions to Rigid and Flexible Pipe Installation (Case 13-15)
Warren White handed out copies of Section 601 and 603, and then discussed comments provided by during the committee meeting. He said he made updates to Section 601 and will go back and make matching updates to 603. Areas discussed included determining trench widths, and what to do if the trench exceeds maximum width – such as stabilizing it using CLSM. Jeff Buckley of ADS said that in the 3rd paragraph of 601.2.5, the term "rock" needs to be defined. Using "bedrock" instead was suggested. There also were questions about the use of the term "granular fill."

The group also discussed the various options for fill materials in the haunching, initial backfill and final backfill. To make it clear that the options were determined by the agency rather than

contractor, sentences were rewritten to state, “With agency approval, native material or CLSM may be used.” Some members questioned whether Section 601 and 603 should be the same is this area. Jeff Buckley believed that as long as you have a good testing for compaction, contractors will use what is necessary to achieve the requirement.

Warren White then discussed the changes to the compaction densities in Table 601-2. Jami Erickson said Phoenix is using 95% compaction for Type II backfill. Working group members agreed that 85% was really almost no compaction and that 95% would be more appropriate. Mr. White said he could update the table to make it consistent with the City of Phoenix. Next the group discussed compaction via jetting. Brian Gallimore gave Warren White Phoenix’s supplement on water consolidation so he could get ideas on what additional testing requirements may be appropriate.

For Section 603, there were questions about the appropriateness of the reference to ASTM F894 in Section 603.2.2 Trench widths. Industry representatives from the pipe industry confirmed that this was not the correct reference, and that the trench widths shown in the table provided a good guide for flexible pipe in general not specific to HDPE. Mr. White said he would remove this reference. The group also discussed the maximum lefts on initial backfill and decided to change it from 4’ to 2’ in Section 603.4.4.

Warren White said he would incorporate the changes discussed during the meeting as well as incorporate changes to Section 618 that were passed Bob Herz case 14-08.

4. Consolidate Testing in Section 611 (Case 14-14)
Jami Erickson said she introduced the new Section 611 as a case at the last committee meeting. She said some minor updates were made to the case. Gordon Tyus said they have been posted on the MAG webpage for 2014 Cases Under Consideration.
http://www.azmag.gov/Projects/Project.asp?CMSID=1055&CMSID2=5827
Jami Erickson said she has not received any new comments yet, and asked members to review and send her comments.

5. Water Testing/Flushing: Section 610 (Case 14-15)
At the last committee meeting Jim Badowich submitted a case based on Rob Godwin’s work on Section 610 to better organize it and remove the testing requirements to go along with the new Section 611. Jim Badowich handed out a new version that had updates and responses to comments received from Bob Herz. He said he would continue working with Rob Godwin to update the case for the next committee meeting.

6. Horizontal Drilling Directional Drilling (New Section 608)
Arvid Veidmark noted that Case 14-08 on Jacking Pipe passed at the last committee meeting. Gordon Tyus said he included the changes discussed during the meeting prior to the vote, and have posted them on the MAG website. (See link above.)

7. Horizontal Drilling Directional Drilling (New Section 608)
Arvid Veidmark handed out an updated draft of Section 608 that incorporated feedback from industry representatives. He said it has been whittled down from 12 pages to just 6 in the current revision. Jim Badowich suggested sending it to Southwest Gas, CenturyLink and Cox for their review since these utilities commonly use this process. After some discussion within the group, Mr. Veidmark said he planned to get feedback from everyone and have a case ready to submit in January of next year.

8. Next Meeting Date
The next meeting of the Water/Sewer working group was moved back a week and scheduled for the fourth Tuesday of July. The meeting will take place July 22nd at 1:30 p.m. at the MAG office.

The meeting was adjourned at 4:03 p.m.

MAG ADA Ramp Update History

- Case 2005-04 added Specifications for Detectable Warnings in Materials subsection 340.2.1 Detectable Warnings, Construction Methods subsection 340.3.1 Detectable Warnings, and under Section 340.4 Measurement were included in the MAG 2006 Revisions.
- Case 2008-11 revised Detail 250 Driveway Entrances to comply with ADA requirements. It also modified MAG Specification Section 340.3.1 Detectable Warnings. The changes were included in the MAG 2009 Revisions.
- 2010 Case 09-14: Replaced sidewalk ramp details 231, 232, 233 and 234 with NEW series 235-1 through 235-5 for ADA compliance.
  N:\Proposed Engineering Standards\2011 Considerations\Details\ADA\MAG 235 series.pdf
- 2010 Case 10-07: Revised sidewalk detail 230. Minimum sidewalk width changed from 4' to 5', two wheel chairs can pass and allow for a wheel chair u-turn.
  N:\Proposed Engineering Standards\2011 Considerations\Details\ADA\MAG 230.pdf
- 2011 Case 11-01(d): Revised wing type alley entrance detail 262 for ADA compliance.
  N:\Proposed Engineering Standards\2011 Considerations\Details\ADA\MAG 262.pdf
- 2011 Case 11-10: Curb ramp revisions for radial installations, NEW detail 234 and revisions to 235-1, 235-2, and 235-3.
  N:\Proposed Engineering Standards\2011 Considerations\Details\ADA\MAG 234 and 235 revisions.pdf
- 2011 Case 11-19: Revise section 304 for detectable warnings.