June 24, 2015

TO: Members of the MAG Standard Specifications and Details Committee

FROM: Tom Wilhite, City of Tempe, Chair

SUBJECT: MEETING NOTIFICATION AND TRANSMITTAL OF TENTATIVE AGENDA

Wednesday, July 1, 2015 at 1:30 p.m.
MAG Office, Suite 200 (Second Floor), Ironwood Room
302 North 1st Avenue, Phoenix

A meeting of the MAG Specifications and Details Committee has been scheduled for the time and place noted above. Members of the MAG Specifications and Details Committee may attend the meeting either in person, by videoconference or by telephone conference call. If you have any questions regarding the meeting, please contact Committee Chair Tom Wilhite at 480-350-2921 or Gordon Tyus, MAG staff at 602-254-6300.

In 1996, the Regional Council approved a simple majority quorum for all MAG advisory committees. If the MAG Specifications and Details Committee does not meet the quorum requirement, no action can be taken. Attendance at the meeting is strongly encouraged.

Pursuant to Title II of the Americans with Disabilities Act (ADA), MAG does not discriminate on the basis of disability in admissions to or participation in its public meetings. Persons with a disability may request a reasonable accommodation, such as a sign language interpreter, by contacting Gordon Tyus at the MAG office. Requests should be made as early as possible to allow time to arrange the accommodation.

It is requested (not required) that written comments on active cases be prepared in advance for distribution at the meeting.

MAG Standard Specifications and Details Committee
TENTATIVE AGENDA
July 1, 2015

		COMMITTEE ACTION REQUESTED
1.	Call to Order and Introductions	
2.	Call to the Audience An opportunity is provided to the public to address the MAG Specifications and Details Committee on items that are not on the agenda that are within the jurisdiction of MAG, or non-action agenda items that are on the agenda for discussion or information only. Citizens will be requested not to exceed a three minute time period for their comments. A total of 15 minutes will be provided for the Call to the Audience agenda item, unless the committee requests an exception to this limit. Please note that those wishing to comment on agenda items posted for action will be provided the opportunity at the time the item is heard.	2. Information.
3.	Approval of June 3, 2015, Meeting Minutes	3. **Review and approve minutes of the June 3, 2015 meeting.**
Carry Forward Cases from 2015		
4.	Case 14-03: Updates to Guardrail Details Revisions to Section 415 and/or inclusion of MCDOT guardrail details.	4. Information and discussion. Sponsor: Bob Herz, MCDOT
5.	Case 14-06: Revisions to Section 718 Preservative Seal for Asphalt Concrete Update specifications for current preservative seal products.	5. Information and discussion. Sponsor: Jeff Benedict, Asphalt Working Group
6	Case 14-12: Proposed Revisions to Sections 336, 321.10.3, 601.2.7 and Detail 200-1 Add pavement removal criteria to prevent full depth pavement cuts from being located within a lane wheel path.	6. Information and discussion. Sponsor: Bob Herz, MCDOT
7.	Case 14-17: Create New Section 322 Provide specifications for Asphalt Stamping - materials and methods.	7. Information and discussion. Sponsor: Brian Gallimore, Materials WG

New Cases for 2015

8. Case 15-01: Misc. Corrections
A. Add omitted text to Section 735.1.
Text was approved by Case 14-07 and merged into Case 13-15.
B. Revise "OA" to Quality Assurance and "OC" to Quality Control in Section 710.
C. Update notes in Detail 225.
D. Correction of Titles on Detail 270.
E. Remove a conflict between specification Section 206 and Section 601.

8. Information and discussion.
Sponsor: Bob Herz, MCDOT
Updated

9. Case 15-03: Revise Section 601.4.5 Trench Final Backfill Placement
Revise Section 601.4.5 trench final backfill placement requirements..

9. Information and discussion.
Sponsor: Bob Herz, MCDOT

10. Case 15-05: Proposed Revisions to Section 616
Update reclaimed water line construction specifications and create NEW Reclaimed Valve Box detail.

10. Information and discussion.
Sponsor: Warren White, Chandler
Updated

11. Case 15-07: Revisions to Section 342 Decorative Pavement Concrete Paving Stone or Brick and Update Detail 225.
Revisions to Concrete Paver Standards for Non-Traveled Surfaces.

11. Information and discussion.
Sponsor: Warren White, Chandler
Updated

12. Case 15-09: Revisions to Section 321
Miscellaneous revisions to Section 321: PLACEMENT AND CONSTRUCTION OF ASPHALT CONCRETE PAVEMENT

12. Information and discussion.
Sponsor: Jeff Benedict, Asphalt Working Group

13. Case 15-10: Revisions to Section 321
Add subsection 321.10.5.3 "Rehabilitation Work" into the MAG Specifications.

13. Information and discussion.
Sponsor: Brian Gallimore, Materials WG

14. Case 15-11: Revisions to Section 717
Incorporate revisions to Section 717, "Mix Design Requirements" into the MAG Specifications.

14. Information and discussion.
Sponsor: Jeff Benedict, Asphalt Working Group

15. Case 15-12: New Section 608
Introduce New Section 608 HORIZONTAL DIRECTIONAL DRILLING.

15. Information and discussion.
Sponsor: Arvid Veidmark, Water/Sewer WG
Updated

16. Case 15-13: Revisions to Section 725
Add text to Section 725.6 to identify what to include in a concrete mix design submittal.

16. Information and discussion.
Sponsor: Jeff Hearne, Concrete Working Group

17. Case 15-14: Revisions to Sections 321 and 325
Revise Sections 321 and 325 to coordinate overlay work requirements.

17. Information and discussion.
Sponsor: Bob Herz, MCDOT

NOTE: Cases 15-10 through 15-14 were introduced during the last meeting. The case summaries are available in the addendum here:
https://www.azmag.gov/Events/Event.asp?CMSID=7014

18. Other New or Proposed Cases

18. Information and discussion.

General Discussion

19. Working Group Reports

19. Information and discussion.

Curb Ramp WG Chair: Warren White
06/08/2015 Meeting. Documentation available:
https://www.azmag.gov/Events/Event.asp?CMSID=7205

Water/Sewer Chair: Jim Badowich
06/18/2015 Meeting

Asphalt Chair: Jeff Benedict
Materials Chair: Brian Gallimore
Concrete Chair: Jeff Hearne
06/25/2015 Meeting

Outside ROW Chair: Peter Kandaris

20. General Discussion

20. Information and discussion.

21. Request for Future Agenda Items

21. Information and discussion.

Adjournment

MEETING MINUTES FROM THE MARICOPA ASSOCIATION OF GOVERNMENTS STANDARD SPECIFICATIONS AND DETAILS COMMITTEE

June 3, 2015

Maricopa Association of Governments Office, Ironwood Room
302 North First Avenue
Phoenix, Arizona

AGENCY MEMBERS

Jim Badowich, Avondale, Vice Chair
Craig Sharp, Buckeye
Warren White, Chandler
Ruben Aguilar, El Mirage
* Wayne Costa, Florence
James Humble, Gilbert (proxy)
Mark Ivanich, Glendale
* Tom Vassallo, Goodyear
Bob Herz, MCDOT
Lance Webb, Mesa (proxy)
Dan Nissen, Peoria
Melody Moss, Phoenix (Streets)
Jami Erickson, Phoenix (Water)
Rod Ramos, Scottsdale
David Mobley, Surprise (proxy)
Tom Wilhite, Tempe, Chair
* Harvey Estrada, Valley Metro
Gregory Arrington, Youngtown

ADVISORY MEMBERS

Jeff Benedict, ARPA
Arvid Veidmark, AZUCA
* Mike Sanders, AZUCA
Brian Gallimore, AGC
Greg Groneberg, AGC
Jeff Hearne, ARPA
Peter Kandaris, Independent
* Paul R. Nebeker, Independent
* Jacob Rodriguez, SRP

MAG ADMINISTRATIVE STAFF

Gordon Tyus

* Members not attending or represented by proxy.

GUESTS/VISITORS

Mike Molina, Oldcastle Precast

1. Call to Order

   Chair Tom Wilhite called the meeting to order at 1:33 p.m.

   Mr. Wilhite introduced James Humble who was filling in for Tom Condit of Gilbert, and Lance Webb who was a proxy for Julie Christoph of Mesa.

2. Call to the Audience

   There was no comment from the audience.

3. Approval of Minutes

   The members reviewed the May 6, 2015 meeting minutes. Dan Nissen moved to accept the minutes as written. Mark Ivanich seconded the motion. A voice vote of all ayes and no nays was recorded.

Carry Forward 2014 Cases

4. Case 14-03: Updates to Guardrail Details – Revisions to Section 415 and/or include Guardrail Details.

   Bob Herz said MCDOT is currently working on the details.

5. Case 14-06: Revisions to Section 718 Preservative Seal for Asphalt Concrete.

   Jeff Benedict said there was an update passed out at the meeting. A number of changes were made, primarily changing the AASHTO testing specs to ASTM. He noted there was still one AASHTO spec remaining. He expected one more change in 718-1 (Type C) to not use Kreb units. Warren White asked if they found if there was a maximum VOC's allowed. Mr. Benedict said that VOC's were so small that there isn't enough to measure or worry about.

6. Case 14-12: Proposed Revisions to Sections 336, 321.10.3, 601.2.7 and Detail 200-1.

   Add pavement removal criteria to prevent full depth pavement cuts from being located within a lane wheel path and to prevent creation of narrow pavement edge strips. Bob Herz said the case provided is in its complete form for review. He said that Peter Kandaris helped him update the CAD drawings for Details 200-1 and 200-2. He said there were some changes to the text on the details as well. He asked members to take it back and see if there were any issues. Jeff Benedict commented that the asphalt working group didn't have any further comments. Mr.

Herz said he also submitted the case to the water/sewer working group for their review. He asked members to review it and send him comments.

7. Case 14-17: Create New Section 322 - Asphalt Stamping.

A revision was passed out at the meeting that incorporated comments from the last meeting, and from Bob Herz. Greg Groneberg said changes included removing references to asphalt and brand names. He looked but did not find material specs for the clear coat. To address Julie Christoph's comment from the last meeting, the revision includes minimum and maximum values in Table 322-1. Jim Badowich asked whether UV will discolor the clear coat. He said they had problems with sealant on pavers turning black. Mr. Groneberg said this sealant is designed for this specific application and mainly helps avoid tracking. Scottsdale uses it, and Mr. Ramos said they didn't have problems with discoloration. Bob Herz asked if the clear coat material refers to any ASTM specs. Mr. Groneberg said he would try again to find more information on the clear coat material. Rod Ramos mentioned that they are doing a lot of painting without the stamping and wondered if it made sense to separate the specs. He said they stopped stamping after getting pushback on the size of the imprints. Mark Ivanich wanted to know if the paint/coating material was slippery when wet. Brian Gallimore said it maintained the texture of the asphalt and gave examples of several current projects, including bike lanes in Tempe. Rod Ramos said they were planning to paint bike lanes as well. Jeff Benedict asked if the title should be changed to address the painting section as well as stamping. Melody Moss suggested titling it Decorative Paving. Greg Groneberg said the spec is based on those from Gilbert and Scottsdale, which are the only cities with formal specifications.

New Cases for 2015

8. Case 15-01: Miscellaneous Corrections A-D.

D. New correction – change title to Detail 270. Bob Herz handed out a change to Detail 270 to change the title back to FRAME & COVER AND GRADE ADJUSTMENT, as it was in the past. He noted that the title of one of the details should also be updated. Warren White said he remembered changing the title recently because grade adjustments are also shown on Detail 391. Bob Herz said Detail 270 also includes survey monuments and water valves not shown on Detail 391. Mark Ivanich suggested rewording it to say Grade Adjustment first. Mr. Herz said he would make additional revisions and resubmit it for the next meeting.

9. Case 15-03: Revise Section 601.4.5 Trench Final Backfill.

Bob Herz discussed the latest version of the case that removed references to any specific equipment and set the maximum default loose lift thickness to 12". The text was changed to allow greater lift thicknesses if the contractor demonstrates to the satisfaction of the Engineer that the Contractor proposed methods and equipment will obtain the required compaction. The

contractor would need agency approval for lifts thicker than 12 inches. Peter Kandaris suggested changing the term “non-compacted” to “loose” to be consistent with common terminology in the field. Tom Wilhite proposed changing “will” to “shall” in the third sentence of 601.4.5. There was a question of whether the last sentence in the first paragraph was still needed. Mr. Herz wanted to leave it to make it clear that compaction was required even if the lifts were 12” or less. The final draft removes any reference to “sheepsfoot” to avoid confusion. Mr. Herz asked members to email him any other suggestions.

10. Case 15-05: Revise Section 616 Reclaimed Water Line Construction and Add New Reclaimed Valve Box Detail.

    Warren White said there was no update this month as he is waiting for comments from Neenah Foundry. He said he did update the line on the detail where it changes form square to round. Brian Gallimore said Rita Chihanik of Neenah said she would get comments to the working group. Bob Herz said the finishing marks should be pointing to the matching surfaces rather than the corner to make it clear which surface is to be finished. He suggested getting a casting diagram if possible to compare to the detail.

11. Case 15-07: Revisions to Concrete Paver Standards for Non-Traveled Surfaces, Detail 225 and Section 342.

    Warren White said in the packet was an updated draft of Detail 225. It takes the current Detail 225 and adds in the lower right a detail for raised medians. It kept the curb options to show vertical or single curb. He asked the committee about the paver notes added in the top right. It was suggested to move these to the written specs, or regular notes as appropriate. Warren White asked about having a supply of extra pavers to allow for maintenance. It was suggested this may be part of the project special provisions, and recommended deleting the note.

    Mark Ivanich asked if the pavers also have English units. Jim Badowich said they are specified by manufacturers as either 60 mm or 80 mm sizes. Mr. White said the written specs included the English sizes. Bob Herz said Section 342 needs to match what is on the details. He said not to call out for interlocking pavers if the detail doesn’t show them. He also noted that if you call out 60 mm pavers, the dimensions on the detail would need to change – the maximum sand would be exceeded otherwise. He also wondered if a minimum amount of sand was needed. Mark Ivanich said the minimum would be just what is required to make it level. Warren White said the specs have straight-edge requirements. He also asked members if they want to keep the concrete thickness at 9” and there was a consensus to keep it the same.

    Tom Wilhite had questions on the concrete header size and width, and wondered if there had been any problems with traffic causing pavers to hit and crack the header. He said Tempe in the past had problems with pavers moving without headers. Rod Ramos said they have not had issues with the header cracking, and typically the concrete is poured monolithically. Jim Badowich wondered if the header could be larger at crosswalks. Mr. White noted this was

allowed in Note 5. It was suggested to refer to Note 5 specifically in the header callout on the detail.

12. Case 15-08: Revisions to clarify Table 710-4 to Eliminate Misinterpretation of Criteria 8.

    Tom Wilhite noted that this item was on the agenda for action. Bob Herz asked if there were any comments. Seeing none he moved to approve Case 15-08 as presented. The motion was seconded by Rod Ramos. A roll call vote was taken. The motion was approved, 14 yes, 0 no, 0 abstaining, 3 not present.

13. Case 15-09: Revisions to Section 321 Placement and Construction of Asphalt Concrete Pavement.

    Jeff Benedict provided a revised handout to Case 15-09 at the meeting. The cover memo highlighted the major changes to Section 321. It mainly addressed changes to placement temperature and coring requirements. He asked members to please review it and bring any comments to the next Asphalt Working Group meeting.

14. Case 15-10: Add Subsection 321.10.5.3 “Rehabilitation Work” into the MAG Specifications.

    Brian Gallimore introduced a new case to address requirements for rehabilitation work when the base materials are not replaced. It added a subsection 321.10.5.3 to allow for some relief on asphalt density when provisions for reworking substandard bases (removals) or existing asphalts (overlays) to meet Section 310 or Section 321 for overlays. Tom Wilhite asked if this could be merged with the previous case on Section 321 revisions. Mr. Gallimore said they are different issues and wants to keep them as separate cases. If anyone has problems with one issue or another it won’t hold up approval on the other item. Peter Kandaris wondered if it belongs in the overlay section and planned to review it. Warren White asked if it could be simplified to overlays. Brian Gallimore said the intention is for it to apply to any rehab work without subgrade repair. Jim Badowich said they still want to recompact existing base. Mr. Gallimore said the City of Phoenix mix is 10% air voids even on new streets, and this is what they are asking for on rehab work. He noted that if you rework the subgrade then this new subsection would not apply. Jim Badowich said Phoenix mix is not a MAG mix. Mr. Gallimore agreed that the MAG spec is more stringent than the Phoenix spec, which is one reason he believes contractors should not be held to the same standards on rehab work. He asked members to bring comments to the next working group meeting.

15. Case 15-11: Incorporate revisions to Section 717, “Mix Design Requirements” into the MAG Specifications.

    Greg Groneberg introduced a new case from the Asphalt Working Group to incorporate revisions to Section 717 for the mix design requirements. The change added clarification to the

mineral admixture calculation as prescribed under the Arizona Test Method 832. The revision states, "…with the exception that mineral admixture shall be considered part of the total weight of aggregate and pounds per cubic foot shall be calculated by using Asphalt Institute's Manual MS-2."

Bob Herz suggested not changing how it is done, just clarifying that the admixture is included as part of the total.

16. Case 15-12: New Section 608 HORIZONTAL DIRECTIONAL DRILLING.

Arvid Veidmark introduced a new case from the Water/Sewer Working Group to propose a new Section 608 Horizontal Directional Drilling (HDD). He said the case has been gone through many revisions at the working group and received feedback from the local utility companies. He noted that a detail illustrating a typical HDD layout and cross-section was missing from the packet. Mr. Tyus said he could post it on the MAG website.

Tom Wilhite asked if there was a table of minimum utility clearances included in the spec. Mr. Veidmark said there wasn't a table, but a minimum separation of one foot was specified in Section 608.5.4 (sixth paragraph). Mr. Wilhite said Tempe requires a 6' min. horizontal clearance and 2' or more at every crossing in their permit requirements. He suggested finding what the requirements are for the agencies. Mr. Veidmark said the Arizona blue stake law requires potholing within 2' of existing utilities, and that typically the design is modified to be outside of the 2' minimum. The design can determine how close and how often potholes are made. Peter Kandaris said at SRP they often potholed prior to final design. Mr. Veidmark said the contractor must get the blue stake certificates.

Arvid Veidmark next explained how the drilling is done, typically with a bore hole 1.5 times the size of the final pipe to allow drilling mud to flow around it. Jim Badowich proposed giving a presentation on the process to the committee. Mr. Veidmark said he would be happy to, but that he would not be able to come to the July meeting, and proposed a presentation in August. Chair Wilhite said he could add a short (15 min.) presentation to the August meeting agenda.

Tom Wilhite also asked about what agencies should be looking for in dry utility installations. Would they get the driller log/as builts etc? Mr. Veidmark said Southwest Gas and Century Link had concerns about documentation requirements because when they get a permit from the city, they may not know everything until the preconstruction meeting. They are relying on the contractor to meet MAG specifications. Jim Badowich said they have worked hard to get buy-in from the utility companies. He added Avondale is going to start requiring utilities provide them the as-builts. He said this option is already available, and that the utilities must still maintain their as-built files. He mentioned they are using them for agency IT and traffic control HDD projects.

There was discussion about the size and location of bore pits. Mr. Veidmark said Southwest Gas does not dictate where they are on the plans. The pits are often determined after potholing

and the final HDD layout is determined. He explained that for HDD, you typically have smaller entry and exit pits that are more like trenches. Mr. Wilhite said they also have them when they have to change directions or make splices. Bob Herz said it would make sense to reference Section 601 for pit excavation and backfill requirements. Mr. Veidmark said they will be discussing the case at the next Water/Sewer Working Group and asked member to provide comments.

17. Case 15-13: Add text to Section 725.6 to Identify what to Include in a Concrete Mix Design Submittal.

    Jeff Hearne introduced a new case from the Concrete Working Group to create a list of what should be included in a concrete mix design submittal, similar to what is done in asphalt mixes. In addition to the list, he also proposed a revision to Sect 725.6 A (1) to change the amount aggregates could vary from 5% to 10% before a new mix design is required. He said ADOT is currently looking at going to 10% or changing to a combined grading similar to what is done for asphalt. He said this second option is already being done in commercial industry and construction. He thought the 10% would be a good first step to allow suppliers to make adjustments to the mix. Mr. Hearne explained that typically mix design submittals are done once a year. Mark Ivanich asked if they are required to provide a break history. Mr. Hearne said the City of Phoenix only asks for one if it is a new mix, but it typically is not needed. He thinks the MAG tables are over designed for strength requirements so there usually is not a problem. Peter Kandaris said they typically require them for transmission foundations. Jeff Hearne said large projects normally have their own specifications. He noted Phoenix and Mesa now have a yearly submission process, and other agencies typically use the same mixes they approve.

18. Case 15-14: Revise Sections 321 and 325 to coordinate overlay work requirements.

    Bob Herz submitted a new case to coordinate overlay work requirements within Sections 321 and 325 to clarify measurement and payment for work associated with the construction of safety edges. Maricopa County approved a change order to pay an extra fee for the safety edges on an asphalt-rubber paving job due to differing overlay specifications in sections 321 and 325.

19. Working Group Reports

    Chair Wilhite asked for reports from the working group chairs.

    a. **Water/Sewer Issues Working Group**
       Jim Badowich said the group met Thursday, May 21, 2015. Most of the meeting was spent discussing the new case on horizontal directional drilling, but one new area of discussion was the use of concrete-polymer meter boxes. He believes the spec needs to be updated because the newer boxes have different dimensions. The next Water/Sewer Working Group meeting is planned for June 18, 2015 at 1:30 p.m. at the MAG office.

b. **Asphalt/Materials Working Groups**
Jeff Hearne said he covered for Jeff Benedict at the May 28th meeting, and the notes were handed out at the meeting that summarized the work done on all the cases. Jeff Benedict said the next meeting is scheduled for June 25th.

c. **Concrete Working Group**
Jeff Hearne said he discussed Section 725 already. The other item discussed was the pervious concrete specs. He has invited contractors that do this work to participate, but doesn't believe a case will be ready until next year.

d. **Outside ROW Working Group**
Peter Kandaris said that he will plan to come to other working group meetings to solicit help updating detail drawings. He is looking for people to mark them up so he can have his drafter make the CAD changes.

e. **Curb Ramp Working Group**
Warren White said the new group is having its kickoff meeting next Monday, June 6th at 1:00 p.m. at the MAG offices. Gordon Tyus said the Cottonwood room next door has been reserved. Mr. White said he is looking for someone from the contractor community to comment on constructability issues. There will be brainstorming on what is wanted and needed for sidewalk ramps.

20. General Discussion

Peter Kandaris said the Geotech Institute wants to look at the specs for Geotextiles. He said he would send out information about the next meeting presentation. Tom Wilhite said he would also plan for the HDD presentation in August. Arvid Veidmark said he would forward a draft presentation.

21. Adjournment:

Seeing no further business the meeting was adjourned at 3:34 p.m.

2015 PROPOSED REVISIONS TO MAG SPECIFICATIONS AND DETAILS

(Updated information can be found on the website: http://www.azmag.gov/Projects/Project.asp?CMSID=1055&CMSID2=7154)

CASE	DESCRIPTION	PROPOSED BY	MEMBER	SUBMITTAL DATE Last Revision	VOTE DATE	VOTE	
	CARRY FORWARD CASES FROM 2014						
14-03	Case 14-03: Updates to Guardrail Details. Revisions to Section 415 and/or inclusion of MCDOT guardrail details.	MCDOT	Bob Herz	01/08/2014		0 0 0	Yes No Abstain
14-06	Case 14-06: Revisions to Section 718 Preservative Seal for Asphalt Concrete.	Asphalt WG	Jeff Benedict	02/05/2014 05/29/2015		0 0 0	Yes No Abstain
14-12	Case 14-12: Proposed revisions to Sections 336, 321.10.3, 601.2.7 and Detail 200. Add pavement removal criteria to prevent full depth pavement cuts from being located within a lane wheel path and to prevent creation of narrow pavement edge strips.	MCDOT	Bob Herz	06/04/2014 05/18/2015		0 0 0	Yes No Abstain
14-17	Case 14-17: Create New Section 322 Asphalt Stamping. Provide specifications for materials and methods.	Materials WG	Brian Gallimore	07/09/2014 05/29/2015		0 0 0	Yes No Abstain
	NEW CASES FOR 2015						
15-01	**Case 15-01: Miscellaneous Corrections:** A. Add omitted text to Section 735.1. Text was approved by Case 14-07 and merged into Case 13-15. Both cases were approved in 2014. B. Revise “OA” to Quality Assurance and “OC” to Quality Control in Section 710. C. Update notes in Detail 225. D. Correct Titles in Detail 270. E. Remove a conflict between specification Section 206 and Section 601.	MCDOT	Bob Herz	02/05/2014 06/23/2015		0 0 0	Yes No Abstain
15-02	Case 15-02: Adjust Fence Requirements to Reference ASTM F1043. Revise Section 772, Table 771-1 and Detail 145.	MCDOT	Bob Herz	01/07/2015	03/04/2015	15 0 1	Yes No Abstain

2015 PROPOSED REVISIONS TO MAG SPECIFICATIONS AND DETAILS

(Updated information can be found on the website: http://www.azmag.gov/Projects/Project.asp?CMSID=1055&CMSID2=7154)

CASE	DESCRIPTION	PROPOSED BY	MEMBER	SUBMITTAL DATE Last Revision	VOTE DATE	VOTE	
15-03	Case 15-03: Revise Section 601.4.5 trench final backfill placement requirements.	MCDOT	Bob Herz	02/04/2015 05/21/2015		0 0 0	Yes No Abstain
15-04	Case 15-04: Revise Section 602 Trenchless Installation of Steel Casing. Update ASTM references for casing material and add minimum casing wall thickness.	Water/Sewer WG	Arvid Veidmark	02/04/2015 02/24/2015	04/08/2015	13 0 0	Yes No Abstain
15-05	Case 15-05: Proposed Revisions to Section 616 Reclaimed Water Line Construction and NEW Reclaimed Valve Box detail.	Chandler	Warren White	03/04/2015		0 0 0	Yes No Abstain
15-06	Case 15-06: Delete 744 ABS TRUSS PIPE AND FITTINGS.	MCDOT	Bob Herz	03/04/2015	05/06/2015	12 0 0	Yes No Abstain
15-07	Case 15-07: Revisions to Concrete Paver Standards for Non-Traveled Surfaces, Section 342 and Detail 225.	Chandler	Warren White	03/04/2015 05/21/2015		0 0 0	Yes No Abstain
15-08	Case 15-08: Revisions to clarify Table 710-4 to eliminate misinterpretation of Criteria 8.	MCDOT	Bob Herz	04/08/2015	06/03/2015	14 0 0	Yes No Abstain
15-09	Case 15-09: Miscellaneous revisions to Section 321: PLACEMENT AND CONSTRUCTION OF ASPHALT CONCRETE PAVEMENT.	Asphalt WG	Jeff Benedict	04/22/2015 06/03/2015		0 0 0	Yes No Abstain
15-10	Case 15-10: Add subsection 321.10.5.3 “Rehabilitation Work” into the MAG Specifications.	Materials WG	Brain Gallimore	06/03/2015		0 0 0	Yes No Abstain
15-11	Case 15-11: Incorporate revisions to Section 717, “Mix Design Requirements” into the MAG Specifications.	Asphalt WG	Jeff Benedict	06/03/2015		0 0 0	Yes No Abstain
15-12	Case 15-12: New Section 608 HORIZONTAL DIRECTIONAL DRILLING.	Water/Sewer WG	Arvid Veidmark	06/03/2015		0 0 0	Yes No Abstain

2015 PROPOSED REVISIONS TO MAG SPECIFICATIONS AND DETAILS

(Updated information can be found on the website: http://www.azmag.gov/Projects/Project.asp?CMSID=1055&CMSID2=7154)

CASE	DESCRIPTION	PROPOSED BY	MEMBER	SUBMITTAL DATE Last Revision	VOTE DATE	VOTE	
15-13	Case 15-13: Add text to Section 725.6 to identify what to include in a concrete mix design submittal.	Concrete WG	Jeff Hearne	06/03/2015		0 0 0	Yes No Abstain
15-14	Case 15-14: Revise Sections 321 and 325 to coordinate overlay work requirements.	MCDOT	Bob Herz	06/03/2015		0 0 0	Yes No Abstain

MARICOPA COUNTY
Department of Transportation

MEMORANDUM

Date: June 3, 2015 Revised 6/18/2015

To: MAG Specifications and Details Committee

From: Robert Herz, MCDOT Representative

Subject: Miscellaneous Corrections **Case 15-01 D**

PURPOSE: Correction of titles on Detail 270

REVISION:

Correction 1 – Detail 270 Title

Title shown on current Detail: FRAME AND COVER
Requested corrected Detail title: **FRAME & COVER AND GRADE ADJUSTMENT**

Title shown in current index: FRAME AND COVER (AND GRADE ADJUSTMENTS)
Title shown in index prior to 2001: FRAME & COVER AND GRADE ADJUSTMENT

Correction 2 – Title lines should be changed to GRADE ADJUSTMENT.
Existing Detail:

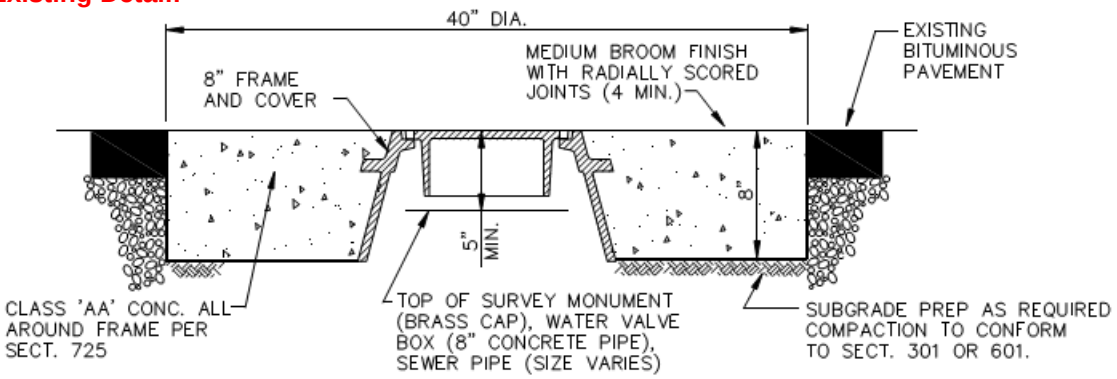

CLEAN OUT FRAME & GRADE ADJUSTMENT
WATER VALVE, SURVEY MONUMENT, OR SEWER

Revised Title:

GRADE ADJUSTMENT

2901 West Durango Street Phoenix, Arizona 85009 Phone: 602-506-4760 Fax: 602-506-5969

MARICOPA COUNTY
Department of Transportation

MEMORANDUM

Date: June 23, 2015

To: MAG Specifications and Details Committee

From: Robert Herz, MCDOT Representative

Subject: Miscellaneous Corrections **Case 15-01 E**

PURPOSE: Remove a conflict between specification Section 206 (STRUCTURE EXCAVATION AND BACKFILL) and Section 601 (TRENCH EXCAVATION, BACKFILLING AND COMPACTION) concerning structural backfill requirements for manholes.

Section 206.1 identifies manholes as a structure type covered by section 206. Section 206.4.2 requires backfill to be Select Material, Type A or B in Table 702-1 and Section 206.4.4 only allows ½ sack or 1 sack controlled low strength material as an alternative backfill material. Section 601.2.6 requires the excavation be backfilled with the same material required for the adjoining pipe line trench. Section 601.4.5 allows "sound earthen material with no piece larger than 4 inches and be free from broken concrete, broken pavement, wood or other deleterious material" for final backfill.

REVISIONS:

601.2.6 Excavation for Manholes, Valves, Inlets, Catch Basins and Other Accessories: The Contractor may place concrete directly against excavated surfaces for cast-in-place items, provided that the faces of the excavation are firm, unyielding, and are at all points outside the structure lines shown on the plans. If the native material is such that it will not stand without sloughing or if precast structures are used, the Contractor shall excavate as needed to place bracing, shoring, and forms or to place the precast structure. ~~**The excavation shall be backfilled with the same material required for the adjoining pipe line trench and compacted per Table 601-2.**~~

Any unnecessary excavation below the elevation indicated for the foundation of any structure shall be replaced with the same class of concrete specified for the structure or with 1½ sack controlled low strength material as specified in Section 728. When the replacement material is structural concrete, the material shall be placed at the same time as the structure. However, when using 1½ sack controlled low strength material, placement of the material shall be per Section 604 which requires a time lag between placement of the controlled low strength material and the structural concrete. The placement of the additional material shall be at no cost to the Agency.

625.3.1 Manholes: (revise the eighth paragraph as shown)
Backfilling shall be done in accordance with the requirements for trench backfilling as stated in Section ~~601~~206.

2901 West Durango Street Phoenix, Arizona 85009 Phone: 602-506-4760 Fax: 602-506-5969

REFERENCES:

206.1 DESCRIPTION:

Structure excavation shall consist of the removal of material for the construction of foundations for bridges, manholes, retaining walls, box culverts, head walls for culverts, and other structures, and other excavation designated on the plans or in these specifications or in the special provisions as structure excavation.

Structure backfill shall consist of furnishing material, if necessary, and placing and compacting backfill material around structures to the lines designated on the plans or specified or directed by the Engineer.

Structure excavation and structure backfill shall include the furnishing of all materials and equipment and the providing of other facilities which may be necessary to perform the excavations and place and compact the backfill, and the subsequent removal of these facilities, except where they are required or permitted by the plans, special provisions or Engineer to remain in place.

206.4.2 Structure Backfill for Earth Retaining Structures: Structure Backfill to be placed against concrete structures designed to retain earth loads, such as bridge abutment backwalls and wingwalls, box culvert outside walls and wingwalls, and retaining walls:
(A) Shall conform to the material and the graduation requirements for Select Material, Type A or B in Table 702-1 unless otherwise approved by the Engineer.

206.4.4 Structure Backfill for Structures within Paved Areas: Where a structure is located within an existing street, proposed street, or paved area shall be compacted to the minimum density specified in Table 601-2, for Type I or shall be filled with ½ sack or 1 sack controlled low strength material as specified in Sections 604 and 728.

TABLE 601-2				
MINIMUM TRENCH COMPACTION DENSITIES				
Backfill Type	**Location**	**From Surface To 2 feet Below Surface**	**From 2 feet Below Surface To 1 foot Above Top of Pipe**	**From 1 foot Above Top of Pipe to Bottom of Pipe**
I	Under any existing or proposed pavement, curb, gutter, attached sidewalk, roadway shoulders, and other areas within right-of-way subject to vehicular traffic, or when any part of the trench excavation is within 2-feet of the existing pavement, curb, or gutter.	100% for granular 95% for non-granular	95%	95%
II	On any utility easement or right-of-way outside limits of Type I backfill.	85%	85%	90%
III	Around any structures (manholes, etc.) or exposed utilities outside limits of Type I backfill.	95% in all cases		

601.4.5 Final Backfill: Material placed above the initial backfill to the top of the trench or to the bottom of the road base material. Final backfill shall be placed in lifts that shall not exceed 2 feet and the lift height shall not be more than can be compacted to the required density with the equipment and methods being used.

Final backfill shall be ABC per Section 702 or sound earthen material with no piece larger than 4 inches and be free from broken concrete, broken pavement, wood or other deleterious material.

MARICOPA COUNTY
Department of Transportation

MEMORANDUM

Date: January 28, 2015 Revised 6/24/2015

To: MAG Specifications and Details Committee

From: Robert Herz, MCDOT Representative

Subject: Proposed Revision to Section 601.4.5 Final Backfill and Section 601.4.8 Granular Material and Native Backfill Material **Case 15-03**

PURPOSE: Revise trench final backfill placement requirement of loose non-compacted material from 2 feet to layers not exceeding twelve inches in depth and require Agency approval for depths greater than 12". Add CLSM and granular material to the listing of acceptable materials for final backfill as presently shown on Detail 200-1. Add to Section 601.4.8 identification of the testing procedures required to determine the percent passing the 200 sieve.

REVISIONS:

601.4.5 Final Backfill: Material placed above the initial backfill to the top of the trench or to the bottom of the road base material. Final backfill shall be placed in horizontal layers not more than twelve inches in depth before compaction. With Agency approval an increase in the loose non-compacted lift depth may be obtained for a project based on specific equipment, methods, and soil conditions. For approval of an increase of the loose non-compacted lift depth, the Contractor shall demonstrate to the satisfaction of the Agency that the required density shall be obtained using the Contractor identified equipment and methods. ~~lifts that shall not exceed 2 feet and t~~The loose lift height shall not be more than can be compacted to the required density with the equipment and methods being used.

Final backfill shall be CLSM per Section 604, ABC per Section 702, granular material or ~~sound earthen~~ native backfill material per Section 601.4.8. ~~with no piece larger than 4 inches and be free from broken concrete, broken pavement, wood or other deleterious material.~~

Backfill under street pavement shall be constructed per Detail 200-1 with the type of trench and surface replacement as noted on the plans or in the special provisions.

2901 West Durango Street Phoenix, Arizona 85009 Phone: 602-506-4760 Fax: 602-506-5969

Unless otherwise noted, backfill under single curb, curb and gutter, attached sidewalk, driveways, valley gutters, etc. shall be the same as the adjacent street pavement.

601.4.8 Granular Material and Native Backfill Material: For purposes of this specification, granular material is material for which the sum of the plasticity index and the percent of the material passing a No. 200 sieve does not exceed 23. The plasticity index shall be tested in accordance with AASHTO T-146 Method A (Wet Preparation), T-89 and T-90. The percent of the material passing a No. 200 sieve shall be tested in accordance with ASTM C136 and ASTM C117.

Native material used for backfill shall have a Plasticity Index (PI) not exceeding 15, be sound earthen material free from broken concrete, broken pavement, wood or other deleterious material with no piece larger than 4 inches.

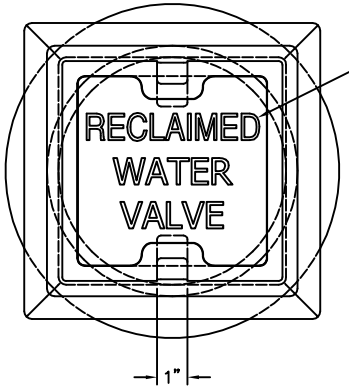

3/4" HIGH LETTERS
RAISED FLUSH

ALTERNATE LETTERING:
1/2" HIGH LETTERS

~~RECLAIMED~~
~~NONPOTABLE~~

NONPOTABLE
WATER
VALVE

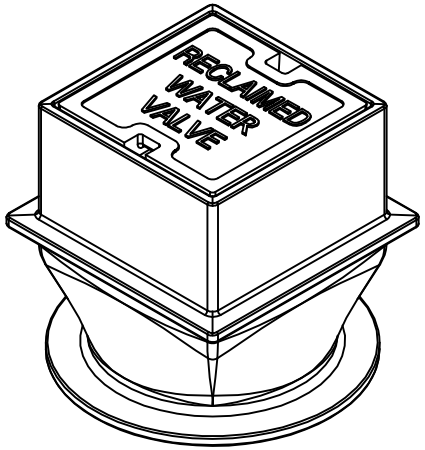

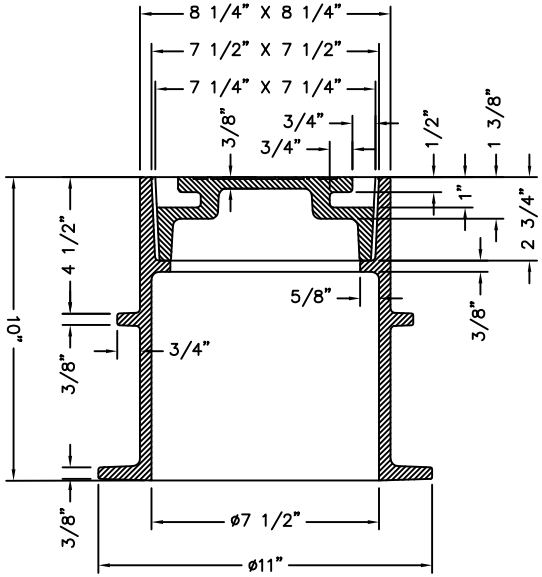

NOTE: ALL DIMENSIONS SHOWN ARE IN ENGLISH
COMPONENT NOS.: VALVE BOX XXXX–XXXX, COVER XXXX–XXXX
EQUIPMENT NOS.: NEW PATTERNS
MATERIAL: LID – CAST GRAY IRON ASTM A–48, CLASS 35B
FRAME – CAST GRAY IRON ASTM A–48, CLASS 40A
FINISH: NO PAINT
WEIGHT: VALVE BOX 40#, COVER 14#

DR. RKB	SCALE 1/4"=1"	TITLE: RECLAIMED WATER VALVE BOX & COVER	
CH. ELN			
APP. SPT	NEENAH FOUNDRY NEENAH WISCONSIN 54956 PHONE 800–558–5075 LINCOLN, NEBRASKA 68529 PHONE 800–234–7466	NF-T2606	B
DATE 05–15–2015			
www.nfco.com			

CAD DWG. REF: T2606.DWG– 1

Chandler • Arizona
Where Values Make The Difference

MEMORANDUM **Case # 15-07**

DATE: July 1, 2015

TO: MAG Specifications and Details Committee Members

FROM: Warren White, City of Chandler Representative

SUBJECT: Revisions to Concrete Paver Stds for Non-Traveled Surface

Case update:

1. Interlocking Concrete Pavement Institute (icpi) Tech Spec 2 Construction of Interlocking Concrete Pavements. Other guidelines and tech papers available here: http://www.icpi.org/view/documents/search?type=ipaper

2. Revision to C-225 Concrete Paver Detail to depict pavers on ABC for raised medians or other non-traveled areas:
    - Revised paver callout notes, header callout, added note no 6 for 60mm allowance, and revised thickness dimension for paver and sand (80mm vs 60 mm)
    - Revised detail title to "INTERLOCKING CONCRETE PAVERS" industry standard.

3. Revision to MAG Section 342 Decorative Pavement Concrete Paving Stone
    - Revised title to "INTERLOCKING CONCRETE PAVEMENTS". Industry standard and purpose of this spec. Other minor revisions for consistency.

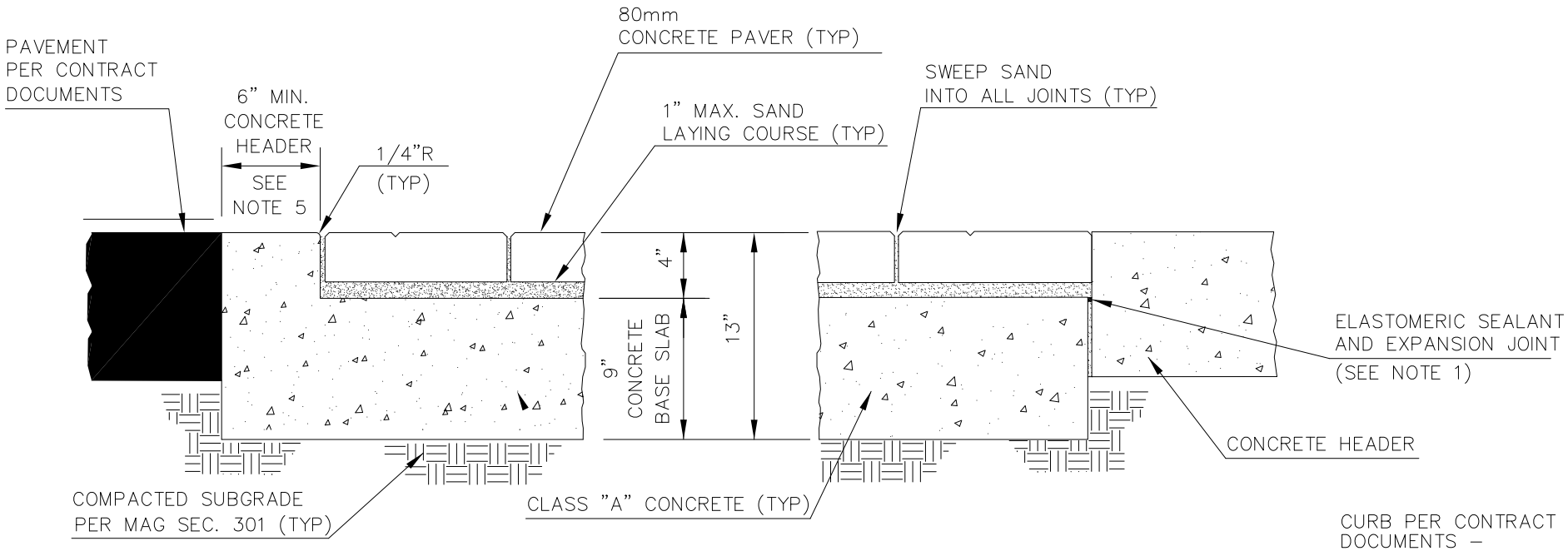

TYPICAL SECTION
(AGAINST PAVEMENT)

TYPICAL AT END OR ALTERNATE SECTION
(AGAINST CONCRETE)

NOTES:

1. 1/2" EXPANSION JOINT, ASTM D-1751 PER MAG SEC. 729, EVERY 50'. ELASTOMERIC SEALANT PER MAG SEC. 342. SEE DETAIL.
2. CONTRACTION JOINTS PER MAG SEC. 342, EVERY 10'.
3. MATERIALS AND CONSTRUCTION PER MAG SEC. 342.
4. MAXIMUM ALLOWABLE JOINT GAP IS 1/2".
5. HEADER SHALL BE 12" AT CROSSWALKS.
6. 60mm PAVERS MAY BE ACCEPTED WITH AGENCY APPROVAL IN NON TRAFFIC AREAS ONLY.

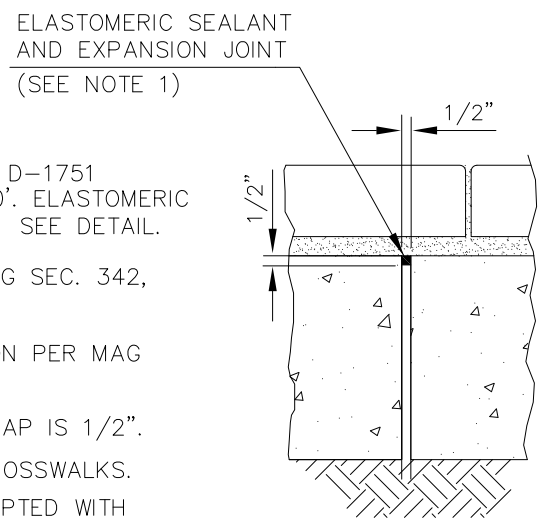

EXPANSION JOINT
DETAIL

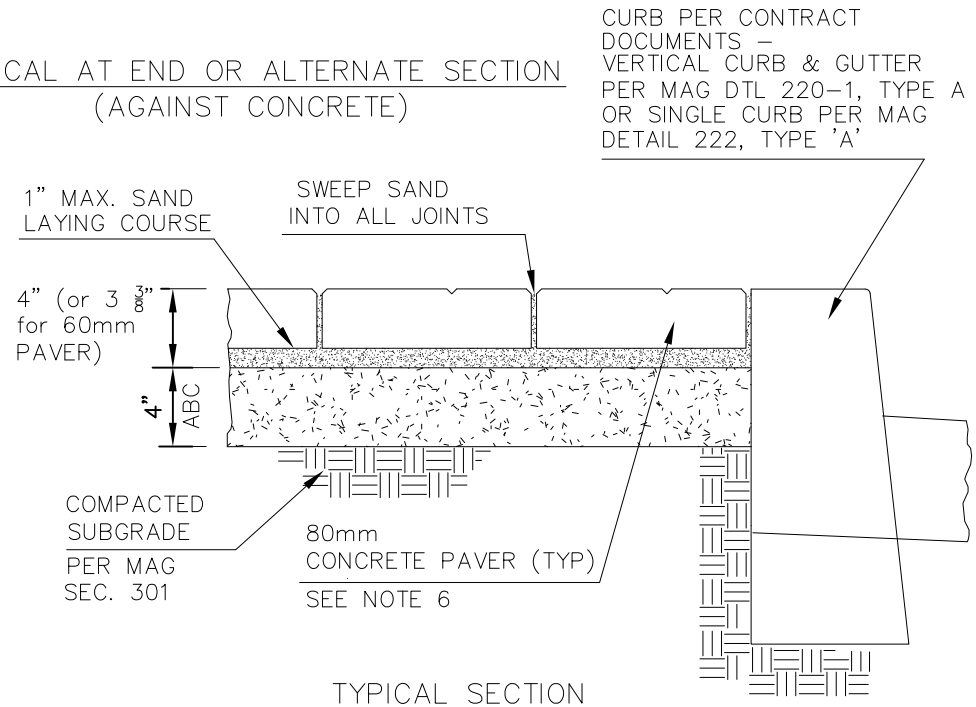

TYPICAL SECTION
(RAISED MEDIAN)

DETAIL NO.		STANDARD DETAIL		REVISED	DETAIL NO.
225	MARICOPA ASSOCIATION of GOVERNMENTS	ENGLISH	INTERLOCKING CONCRETE PAVERS	01-01-2016	225

SECTION 342
~~DECORATIVE PAVEMENT~~
~~CONCRETE PAVING STONE~~INTERLOCKING CONCRETE PAVEMENTS

342.1 GENERAL:

The Contractor shall furnish all necessary labor, material, tools and equipment to complete the proper installation of ~~decorative~~ interlocking concrete pavers used in medians, crosswalks, intersections or as otherwise noted in the Contract Documents. This includes furnishing a 10-foot straightedge to accomplish the level test when required by this specification.

The decorative pavement shall be true in line and grade and installed to coincide and align with the adjacent work elevation. All edges shall be retained to secure the pavers and sand laying course.

The Contractor shall construct a sample panel 10-feet by 10-feet for inspection and approval by the Engineer, prior to the actual installation for the project. Once approved, the panel shall be used as a standard for the remainder of the work. The panel shall remain undisturbed throughout the construction of the pavers and final approval by the Engineer.

342.2 MATERIALS:

342.2.1 Aggregate Base Course: Aggregate Base Course shall be per Table 702-1.

342.2.2 Portland Cement Concrete: When the pavers are subject to vehicular traffic, Portland Cement Concrete shall be Class A per Section 725. All other locations, the Portland Cement Concrete shall be a minimum of Class B per Section 725.

342.2.3 Sand: Sand used for laying course shall conform to ASTM C33 except for the gradation. The gradation shall comply with Table 342-1.

TABLE 342-1								
SAND GRADATION								
Sieve Size	3/8 inch	No. 4	No. 8	No. 16	No.30	No. 50	No. 100	No. 200
Percent Passing	100	95-100	85-100	15-85	25-60	10-30	2-10	0-1

342.2.4 Concrete Pavers: Pavers shall have a minimum of thickness of 80 mm (3.15) when installed in traffic bearing areas and 60 mm (2.36 in.) ~~When~~ when installed in ~~non~~ non-traffic bearings areas. Pavers shall be of an interlocking design conforming to ASTM C936-82. Pavers shall be sound and free of defects that would interfere with the proper placing of the unit or impair the strength or permanence of the construction. The Contractor shall submit two samples of each type of pavers used on the project for review and approval by the Engineer prior to any work. The pavers and materials used in their manufacture shall conform to the following:

(A) Compressive Strength: Pavers shall have a minimum compressive strength of 8,000 psi in accordance with ASTM C140.

(B) Absorption: The average absorption shall not be greater than 5 percent, with no individual unit absorption greater than 7 percent.

(C) Portland Cement: Cement shall comply with Section 725.2, Type II.

(D) Aggregates: Aggregates shall conform to ASTM C33 (washed, graded sand and rock, no expanded shale or lightweight aggregates).

(E) Other Constituents: Coloring pigments shall be applied integrally to the concrete. Air entraining admixtures, coloring pigments, integral water repellents, and finely ground silica shall be previously established as suitable for use in concrete and either shall conform to ASTM standards where applicable, or shall be shown by test or experience not to be detrimental to the concrete.

(F) Physical Properties: The size, shape, design and color of the pavers shall be as noted in the Contract Documents.

342.2.5 Expansion Joint: Expansion joint filler material shall be 1/2-inch premolded and comply with Section 729 and ASTM D1751.

342.3 CONSTRUCTION PROCEDURES:

342.3.1 Subgrade: The subgrade shall be constructed true to grades and lines shown on the plans and compacted to a minimum dry density of 95% as specified in MAG Section 301.

342.3.2 Aggregate Base Course: When aggregate base course is specified per Detail 225, the aggregate base course shall be constructed true to grades and lines shown on the plans and compacted to a minimum dry density of 100% per Section 301 with the surface of the aggregate base course not varying by more than +1/8-inch in 10-feet.

342.3.3 Concrete Header and Base Slab: Forms shall be thoroughly cleaned each time they are used, and shall be coated with a light oil, or other releasing agent of a type which will not discolor the Portland Cement concrete.

The Portland Cement concrete shall be thoroughly spaded away from the forms so that there will be no rock pockets next to the forms. Compacted by mechanical vibrators may be used when approved by the Engineer. Tamping or vibrating shall continue until the mortar flushes to the surface, and the coarse aggregate has been tamped below the surface.

All edges shall be shaped with a suitable tool to form a rounded edge of radius as directed in Detail 225.

The Portland Cement concrete header face form shall not be removed before the concrete has taken the initial set and has sufficient strength to carry its own weight. The concrete header outer form shall not be removed until the concrete has hardened sufficiently to prevent any damage to the concrete. Any porting of concrete damaged while stripping forms shall be repaired or if the damage is severe, replaced at no additional cost to the Contracting Agency. The face and top of the concrete header shall be tested with a 10-foot straightedge or curve template, longitudinally along the surface. Any deviation in excess of 1/4-inch in 10-feet shall be corrected at no additional cost to the Contracting Agency.

Any section of the work deficient in depth or not conforming to the plans or specifications shall be removed and replaced by the Contractor at no additional cost to the Contracting Agency.

Finishing and curing of the concrete shall be done in the manner specified in Section 340.

342.3.4 Expansion Joints: Expansion joints shall be constructed to the full depth and width of the concrete with the top of the material one-half inch below the top surface as depicted in Detail 225 unless otherwise specified. After the concrete is cured, the top one-half inch shall be filled to the surface of the concrete with a premium-grade, high-performance, moisture-cured, single-component, polyurethane-based, non-sag elastomeric sealant, ASTM C920, Type S, Grade NS, Class 25, Sikaflex-lA or equal.

Joints shall be constructed in a straight line and vertical place perpendicular to the longitudinal line of the concrete header, except in cases of curved alignment when they will be constructed along the radial lines of the header. In the case of base slabs, pavers shall be placed continuously over the expansion joints.

342.3.5 Contraction Joints: Contraction joints shall be constructed in a straight line and vertical plane perpendicular to the longitudinal line of the concrete header, except in cases of curved alignment when they will be constructed along the radial lines of the header. They shall be constructed to a depth of one inch with rounded edges and placed at 10-foot intervals. Contraction Joints shall be filled to the surface of the surrounding concrete with elastomeric sealant specified in 342.3.3.

342.3.6 Sand Laying Course: The maximum thickness of the sand course shall be one-inch. Screeding boards shall be used to ensure a uniform thickness. The sand shall not be compacted, walked on or wet down.

342.3.7 Concrete ~~Paving Stones~~Pavers: The concrete pavers shall be clean and free of foreign materials before installation. Paving work shall be plumb, level and true to line and grade and shall be installed to properly coincide and align with adjacent work and elevations. All edges must be retained to secure the perimeter pavers and the sand laying course. The pavers shall be laid in such a manner that the desired pattern is maintained and joints between the pavers are as tight as possible.

The Contractor shall lay the pavers starting from the longest straight line and from a true 90-degree corner. The pavers shall be installed hand-tight and level on the undisturbed sand course in a manner that eliminates gaps between the ~~stones~~ pavers and the edge retention header. String lines shall be used to hold all pattern lines true. The gaps at the edge of the paver surface shall be filled with pavers cut to fit. Cutting shall be accomplished to leave a clean edge to the traffic (vehicular or pedestrian) surface using a masonry saw cut.

After the pavers are in place, they shall be vibrated into the sand laying course using a vibrator capable of 3,000 to 5,000 pounds compaction force. This will require two passes at 90 degrees to each other. After vibration, approximately 1/4-inch of clean masonry sand containing at least 30 percent of 1/8-inch particles shall be placed over the paver surface, allowed to dry, and vibrated into the joints with additional vibrator passes and brushing so as to completely fill joints. Excess sand shall be swept from the surface.

The finished paver surface shall be tested longitudinally and transverse to the concrete header or curb with a 10-foot straightedge along the surface. Any deviation in excess of 1/8-inch shall be corrected at no additional cost to the Contracting Agency.

Any broken or damaged pavers shall be removed and replaced. Replacement pavers shall be tamped into place and the joints filled with masonry sand as specified herein. The completed installation shall be cleaned of all debris, surplus material and equipment.

342.4 MEASUREMENT AND PAYMENT:

Measurement will be the square foot. Payment will be made at the unit bid price per square foot. This payment shall be full compensation for all labor, materials, tools and equipment required to complete the work.

- End of Section -

The Strength of a National Company With Local Customer Service
PAVESTONE
Improving Your Landscape™
pavestone.com

Tech Spec 2

icpi
Interlocking Concrete Pavement Institute

Construction of Interlocking Concrete Pavements

Purpose

This technical bulletin gives construction guidelines to design professionals and contractors of interlocking concrete pavements. The bulletin reviews the steps in constructing an aggregate base, bedding sand and concrete pavers. This pavement structure is commonly used for pedestrian and vehicular applications. Pedestrian areas, driveways, and areas subject to limited vehicular use are paved with units 2 3/8 in. (60 mm) thick. Streets and industrial pavements should be paved with units at least 3 1/8 in. (80 mm) thick.

It is recommended that ICPI Certified Installers be utilized for the construction of interlocking concrete pavement. These individuals have attended training and have demonstrated their knowledge of the guidelines, materials and techniques specific to interlocking concrete pavement. ICPI maintains a list of Certified Installers on www.icpi.org .

Aggregate bases stabilized with asphalt or cement are recommended under very heavy loads, and over weak or saturated soil subgrades. These are sometimes used when adequate aggregates are not available or when a stabilized base is more economical than unstabilized aggregate. Refer to *Tech Spec 4–Structural Design of Interlocking Concrete Pavement for Roads and Parking Lots* when looking for additional information regarding the structural design of the base and subbase. *Tech Spec 4* is based on the design methods detailed in ASCE 58-10 *Structural Design of Interlocking Concrete Pavements for Municipal Streets and Roadways*.

Concrete pavers made in the U.S. should meet the requirements established in the American Society for Testing and Materials (ASTM) C 936, *Standard Specification for Solid Interlocking Concrete Paving Units.* Requirements of this standard include a minimum average compressive strength of 8,000 psi (55 MPa), average absorption no greater than 5%, resistance to at least 50 freeze-thaw cycles with average material loss not exceeding 1%, and conformance to abrasion resistance tests.

Concrete pavers made in Canada are required to meet requirements set forth by the Canadian Standards Association CSA-A231.2 *Precast Concrete Pavers*. This standard requires a minimum average cube compressive strength of 7,250 psi (50 MPa) or 5,800 psi (40 MPa) at delivery. There should be no greater than 500 g/m^2 of material lost after 50 freeze thaw test cycles while immersed in water with a 3% saline solution.

Installation steps include job planning, layout, excavating and compacting the soil subgrade, applying geotextiles (optional), spreading and compacting the sub-base and/or base aggregates, constructing edge restraints, placing and screeding the bedding sand, and placing concrete pavers. For larger installations mechanical placement of pavers may be more economical. Refer to *Tech Spec 11 –Mechanical Installation of Interlocking Concrete Pavements* for additional information.

Figure 1. Excavation of the soil subgrade and placing grade stakes.

© 1995 ICPI Tech Spec No. 2 Interlocking Concrete Pavement Institute • Revised October 2014 • All rights reserved.

Figure 2. Compacting the soil subgrade.

Figure 3. Application of the geotextile under aggregate base.

Job Planning

Prior to excavating, check with the local utility companies to ensure that digging does not damage underground pipes or wires. Many localities have one telephone number to call at least two days before excavation for marking utility line locations. Overhead clearances should be checked so that equipment does not interfere with wires. Site access by vehicles and equipment should be established so that the job can be built without delays.

Layout

In preparing for excavation, the area to be removed should be marked with stakes. See Figure 1. The stakes should be a slight distance away from the area to be removed so that they are not removed during excavation. The stakes should be marked to establish grades, or have string lines pulled and tied to them. Slopes should be a minimum of 1.5%. In the case of roads, the minimum longitudinal slope should be 1% with a minimum cross slope of 2%. Grade stakes should be checked periodically during the job to be sure that they have not been disturbed.

Excavating, Drainage and Compacting the Soil Subgrade

During and after excavation, the soil should be inspected for organic materials or large rocks. If organic materials, roots, debris, or rocks remain, they should be removed and replaced with clean, compacted backfill material. Free-standing water saturating the soil should be removed. After it is removed, low, wet areas can be stabilized with a layer of crushed stone and/or cement.

Typical 4 in. (100 mm) diameter perforated drainage pipes surrounded with minimum 3 in. (75 mm) of No. 57 or similar open-graded stone is wrapped in woven or non-woven geotextile as specified by the designer. The surface of the stone is even with the top of the compacted soil subgrade. The stone and geotextile pipe assembly is placed along the pavement perimeter to remove excess water in the subgrade soil and base. The perforated pipe should be sloped and directed to outlets at the sides or ends of the pavement. The pipe outlets should be covered with screens to prevent animal ingress. Drain pipes are recommended in clay soils or other slow draining soils subject to vehicular traffic. Soil subgrade drainage extends pavement performance to the extent that the small additional investment is returned many times in additional pavement service years.

Compaction of the soil subgrade is critical to the performance of interlocking concrete pavements. See Figure 2. Adequate compaction will minimize settlement. Compaction should be at least 98% of standard Proctor density as specified in ASTM D 698. However, modified Proctor density (ASTM D 1557) is

Table 1. Guide to the Application of Compaction Equipment to Various Soils *(Courtesy of Vibromax 2000 Co.)*

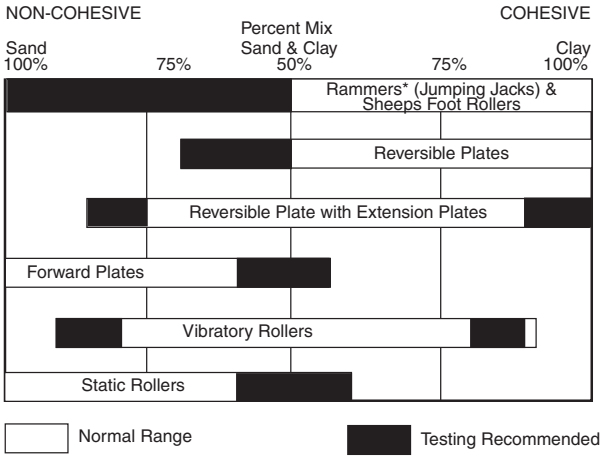

*Rammers work very well in sand if confined, as around abutments, foundations, etc.

Table 2. Geotextile Requirements for Separation

Geotextile Class		Class I [a]		Class II [a]		Class III [a]	
Elongation	ASTM D 4632	< 50%	> 50%	< 50%	> 50%	< 50%	> 50%
Grab Strength [b]	ASTM D 4632	315 lb [1400 N]	202 lb [900 N]	247 lb [1100 N]	157 lb [700 N]	180 lb [800 N]	112 lb [500 N]
Sewn Seam Strength [b,c]	ASTM D 4632	283 lb [1260 N]	182 lb [810 N]	223 lb [990 N]	142 lb [630 N]	162 lb [720 N]	101 lb [450 N]
Tear Strength [b]	ASTM D 4533	112 lb [500 N]	79 lb [350 N]	90 lb [400 N] [d]	56 lb [250 N]	67 lb [300 N]	40 lb [180 N]
Puncture Strength [b]	ASTM D 6241	618 lb [2750 N]	433 lb [1925 N]	495 lb [2200 N]	309 lb [1375 N]	371 lb [1650 N]	223 lb [990 N]
Permittivity [b,e]	ASTM D 4491	0.02 sec^{-1}					
Apparent Opening Size	ASTM D 4751	0.024 in [0.60 mm] maximum average roll value					
Ultraviolet Stability	ASTM D 4355	> 50% after 500 hr exposure					

[a] The severity of the installation conditions generally dictates the required geotextile class. Class I is the most severe and Class III is the least severe.
[b] All numeric values represent MARV in the weaker principal direction.
[c] When sewn seams are required.
[d] The required tear strength for woven monofiliment geotextiles if 250 N.
[e] Default Value. Permittivity of the geotextile should be greater than the soil.

preferred, especially for areas under constant vehicular traffic. This compaction standard may not be achievable in extremely saturated or very fine soils. Stabilization of the soil subgrade may be necessary in these situations.

Compaction equipment varies with the type of subgrade soil. Manufacturers of compaction equipment can provide guidance on which machines should be applied to various types of soil. Table 1 gives general guidance on applying the right machines to various soil types.

Monitoring soil moisture content is important to reaching the compaction levels described above. Soil moisture and density measurements should be taken to control and verify the degree of compaction. The moisture content and compacted density of the subgrade soil should be checked for compliance to specifications before installing geotextiles.

Applying Geotextiles (Optional)

Geotextile fabric may be used in areas where soil remains saturated part of the year, where there is freeze and thaw, or over clay and moist silty subgrade soils. See Figure 3. As a separation layer, geotextiles prevent the migration of soil into the aggregate base under loads, especially when saturated, thereby reducing the likelihood of rutting. When geotextiles are used they preserve the load bearing capacity of the base over a greater length of time than placement without them. Woven or non-woven fabric may be used under the base with a maximum apparent opening size of 0.60mm as testing using ASTM D 4751. Table 2 lists minumum requirements of geotextiles for soil separation. These requirements are from AASHTO M 288-06 *Standard Specification for Geotextile Specification for Highway Applications*. The minimum down slope overlap should be at least 12 in. (300 mm). Overlap requirements for low strength subgrades are detailed in Table 3.

Table 3. Geotextile Overlap Requirements

Soil CBR	Overlap
> 3.0	1.0 ft [0.3 m] to 1.5 ft [0.45 m]
1.0 to 3.0	2.0 ft [0.6 m] to 3.0 ft [1.0 m]
0.5 to 1.0	3.0 ft [1.0 m] or sewn
< 0.5	Sewn
All roll ends	3.0 ft [1.0 m]

Table 4. Grading Reqirements for Dense Graded Material

Sieve Size (Square Openings)	Design Range[(a)] % Passing		Job Mix Tolerance % Passing	
	Bases	Subbases	Bases	Subbases
2 in. (50 mm)	100	100	–2	–3
1½ in. (37.5 mm)	95-100	90-100	±5	±5
¾ in. (19 mm)	70-92	—	±8	—
⅜ in. (9.5 mm)	50-70	—	±8	—
No. 4 (4.75 mm)	35-55	30-60	±8	±10
No. 30 (600 µm)	12-25	—	±5	—
No. 200 (75 µm)	0-8[(b)]	0-12[(b)]	±3	±5

(a) Job mix formula should be selected with due regard to availability of materials in the area of the project. Job mix tolerances may permit acceptance of test results outside the design range.

(b) Determine by wet sieving. Where frost and free moisture are indicative of site conditions, a lower percentage passing the No. 200 (75 µm) sieve shall be specified.

Note: ASTM D 2940 corresponds closely to this National Stone Association developed specification. While local or state highway specifications may be substituted for the design ranges above, the fraction finer than the No. 200 (75 µm) sieve should be maintained.

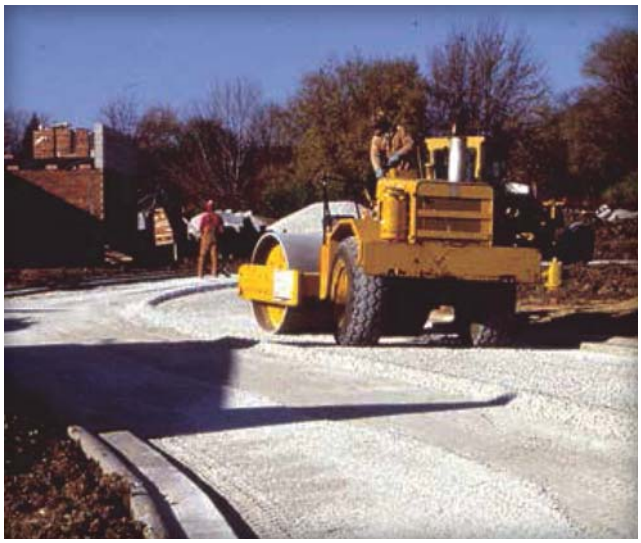

Figure 4. Base compaction with a vibratory roller.

When the fabric is placed in the excavated area, it should be turned up along the sides of the opening, covering the sides of the base layer. There should be no wrinkles on the bottom. When the aggregate is dumped on the fabric, the tires from trucks should be kept off the fabric to prevent wrinkling.

Spreading and Compacting the Subbase and/or Base Aggregates

Specifications typically used by cities, states, or provinces for aggregate base materials under flexible asphalt pavements are adequate for interlocking concrete pavements. If no specifications are available use the recommended grading for the aggregate base shown in Table 4. Spread and compact the base in 4 to 6 in. (l00 to 150 mm) lifts. High force compaction equipment can compact thicker lifts. Consult with compaction equipment manufacturer for guidance. Frozen base material should not be installed, nor should material be placed over a frozen soil subgrade.

The thickness of the base is determined by traffic, soil type, subgrade soil drainage and moisture, and climate. Sidewalks, patios and pedestrian areas should have a minimum base thickness (after compaction) of 4 in. (100 mm) over well-drained soils. Residential driveways on well-drained soils should be at least 6 in. (150 mm) thick. In colder climates, continually wet or weak soils will require that bases be at least 2 to 4 in. (50 to 100 mm) thicker.

Local, state or provincial engineering standards for base thickness can be applied to streets constructed with interlocking concrete pavers. Non freeze-thaw areas with well-drained soils should have at least a 6 in. (150 mm) thick base. Minimum base thicknesses for residential streets are 8 to 10 in. (200 to 250 mm). Greater thicknesses are often used in regions with numerous freeze-thaw cycles, expansive soils, or very cold climates. A qualified civil engineer familiar with local soils and traffic conditions should be consulted to determine the appropriate base thickness for streets and heavy-duty, industrial pavements.

Many localities determine base thickness with the 1993 *Guide for the Design of Pavement Structures* published by the American Association of State Highway and Transportation Officials (AASHTO). The AASHTO procedure calculates the structural number (SN) of the strength coefficients of each base and pavement layer. The SN is determined by assessing the traffic loads, soils, and environmental factors (e.g., drainage, freeze-thaw). The layer coefficient recommended for $3^1/_8$ in. (80 mm) thick pavers on 1 in. (25 mm) bedding sand is 0.44 per inch (25 mm), i.e., the SN = $4^1/_8$ x 0.44 = 1.82. Base thicknesses can be readily determined by using the charts in *ICPI Tech Spec 4, Structural Design of Interlocking Concrete Pavement for Roads and Parking Lots* or ICPI Structural Design Software.

Like compaction of the soil subgrade, adequate compaction of the base is critical to minimizing settlement of interlocking concrete pavements. See Figure 4. Special attention should be given to achieving compaction standards adjacent to edge restraints, catch basins and utility structures. When spread

Figure 5. Density testing of the aggregate base with a nuclear density gauge.

Figure 6a & 6b. Screeding the bedding sand.

and compacted, the aggregate base should be at its optimum moisture. Bases for pedestrian areas and residential driveways should be compacted a minimum 98% of standard Proctor density. For vehicular areas, compaction should be at least 98% of modified Proctor density as determined by ASTM D 1557, or AASHTO T180. While the highest percentage compaction (100%) is preferred, it may not be achievable on weak or saturated soils. Density measurements of the compacted base should be made with a nuclear density gauge or other methods approved by the local, state or provincial transportation department. See Figure 5. Unless otherwise specified, the compacted thickness of individual lifts should be $+^3/_4$ in. to $-^1/_2$ in. (+19 mm to –13 mm). Maintaining consistent lift thickness during compaction will help achieve consistent density. Variation in final base surface elevations should not exceed $\pm^3/_8$ in. (± 10 mm) when tested with a 10 ft. (3 m) straightedge.

The finished surface of a compacted aggregate base should not allow bedding sand to migrate into it. If the surface will allow ingress of bedding sand, a choke course of fine material can be spread and compacted into the surface, or a bitumen tack coat can be applied. The surface of the base course and its perimeter around the edge restraints should be inspected for areas that might allow sand to migrate after installation. Such locations can be joints in curbs, around utility structures or catch basins. These areas should be covered with a geotextile fabric to prevent loss of the bedding sand.

Constructing Edge Restraints

Edge restraints are a key part of interlocking concrete pavements. By providing lateral resistance to loads, they maintain continuity and interlock among the paving units. Aluminum, steel, plastic, or concrete are typical edge restraints. Consult *ICPI Tech Spec 3* on edge restraints for recommendations on applications and construction.

Figure 7. Placing the concrete pavers.

Figure 8. Saw cutting pavers.

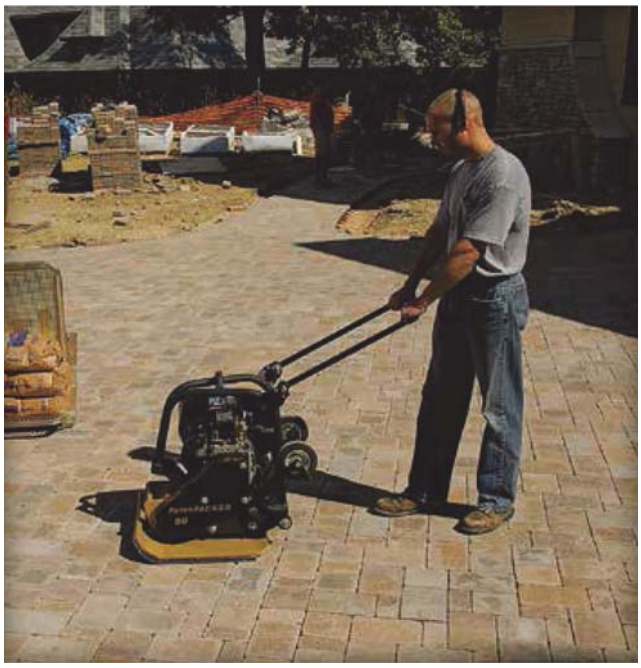

Figure 9. Compacting the pavers and bedding sand.

Figure 10. Spreading and sweeping joint sand.

Edge restraints must be set at the correct level, especially if the tops of the restraints are used for screeding the bedding sand. Their elevations should be checked prior to placing the sand and pavers. Edge restraints are typically installed before the bedding sand and pavers are laid. However, some restraints can be secured into the base as the laying progresses.

Placing and Screeding the Bedding Sand

Bedding sand under concrete pavers should conform to ASTM C 33 or CSA A23.1. This material is often called concrete sand. Masonry sand for mortar should never be used for bedding, nor should limestone screenings or stone dust. The bedding sand should have symmetrical particles, generally sharp, washed, with no foreign material. Waste screenings or stone dust should not be used, as they often do not compact uniformly and can inhibit lateral drainage of moisture in the bedding layer. *ICPI Tech Spec 17—Bedding Sand Selection for Interlocking Concrete Pavements in Vehicular Applications* provides additional guidance on selecting bedding sand.

Bedding sand should be spread and screeded to an uncompacted nominal 1 in. (25 mm) thickness. Frozen or saturated sand should not be installed. If there is an uneven base (due to inconsistent compaction or improper grading), the bedding sand should not be used to compensate for it. Over time, unevenness in the bedding sand will reflect through to the surface. Uneven areas on the base surface must be made even prior to placing the bedding sand.

Once the base is complete, screed pipes or rails are placed on it and the bedding sand spread over them. The sand is screeded or smoothed across the pipes with a straight and true strike board. See Figure 6. Screed pipes are removed and the resulting void filled with bedding sand. After the sand is screeded it should not be disturbed. Sufficient sand is placed and screeded to stay ahead of the placed pavers. Powered screeding machines that roll on rails and asphalt spreading machines adapted for screeding sand have been successfully used on larger installations to increase productivity.

Placing the Concrete Pavers

Concrete pavers can be placed in many patterns depending on the shapes. Herringbone patterns (45 or 90 degree) are recommended in all street applications, as these interlocking patterns provide the maximum load bearing support, and resist creep from starting, braking and turning tires. See Figure 7. Chalk lines snapped on the bedding sand or string lines pulled across the surface of the pavers are used as a guide to maintain straight joint lines. Buildings, concrete collars, inlets, etc., are generally not straight and should not be used for establishing straight joint lines.

Joint widths between the pavers should be consistent and be between $^{1}/_{16}$ and $^{3}/_{16}$ in. (2 and 5 mm). Some pavers are made with spacer bars on their sides. These maintain a minimum joint width, allowing the sand to enter between each unit. Pavers without spacers are generally not placed snug against each other since string lines guide consistent joint spacing.

Cut pavers should be used to fill gaps along the edge of

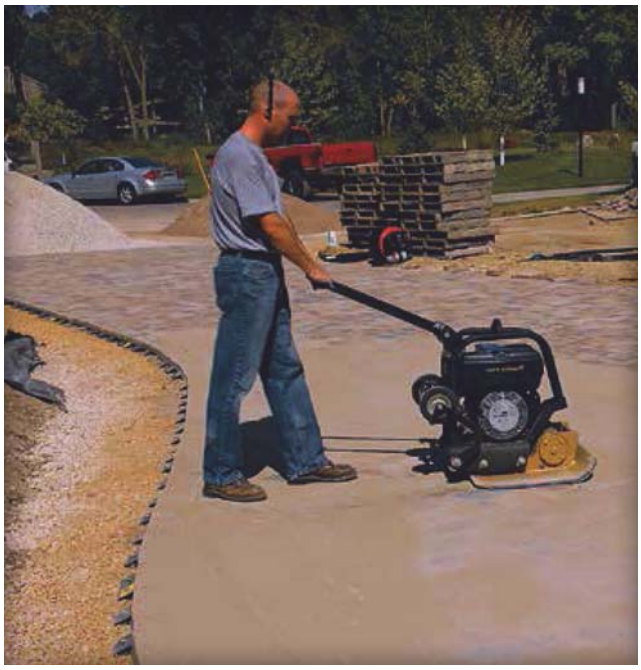

Figure 11. Vibrating sand into the joints.

the pavement. Pavers are cut with a double bladed splitter or a masonry saw. See Figure 8. A saw gives a smooth cut. Gaps greater than $^3/_8$ in. (10 mm) should be filled with cut pavers. For street applications do not cut pavers to less than $^1/_3$ their original size. Instead fill voids with two cut pavers.

After an area of pavers is placed, it should be compacted with a vibrating plate compactor, which should be capable of exerting a minimum of 5,000 lbs. (22 kN) of centrifugal compaction force and operate at 75-90 hertz. See Figure 9. At least two passes should be made across the pavers to seat the pavers in the bedding sand and force it into the joints at the bottom of the pavers.

Dry joint sand is swept into the joints and the pavers compacted again until the joints are full. See Figures 10 and 11. This may require two or three passes of the plate compactor. If the sand is wet, it should be spread to dry on the pavers before being swept and compacted into the joints. Joint sand may be finer than the bedding sand to facilitate filling of the joints. Bedding sand also can be used to fill the joints, but it may require extra effort in sweeping and compacting. Compaction should be within 6 ft (2 m) of an unrestrained edge or laying face. All pavers within 6 ft (2 m) of the laying face should have the joints filled and be compacted at the end of each day. Excess sand is then removed. See Figure 12. The remaining uncompacted edge can be covered with a waterproof covering if there is a threat of rain. This will prevent saturation of the bedding sand, minimizing removal and replacement of the bedding sand and pavers.

Final surface elevations should not vary more than $\pm^3/_8$ in. ($\pm$10 mm) under a 10 ft (3 m) straightedge, unless otherwise specified. Bond or joint lines should not vary $\pm^1/_2$ in. (13 mm) over 50 ft (15 m) from taut string lines. The top of the pavers should be $^1/_8$ to $^3/_8$ in. (3 to 10 mm) above adjacent catch basins, utility covers, or drain channels, with the exception of areas required to meet ADA design guideline tolerances. The top of the installed pavers may be $^1/_8$ to $^1/_4$ in. (3 to 6 mm) above the final elevations to compensate for possible minor settling. A small amount of settling is typical of all flexible pavements. Optional sealers or joint sand stabilizers may be applied. See *ICPI Tech Spec 5–Cleaning, Sealing and Joint Sand Stabilization*

Figure 12. Excess sand swept from the finished surface will make the pavement ready for traffic.

Figure 13. The completed paved area from Figure 12 receives tank traffic at the U.S. Army Proving Grounds in Aberdeen, Maryland.

of Interlocking Concrete Pavement for further guidance.

ICPI Tech Spec 9–A Guide Specification for the Construction of Interlocking Concrete Pavement helps translate construction methods and procedures described here into a construction document. *Tech Spec 9* provides a template for developing project-specific materials and installation specifications for the bedding and joint sand, plus the concrete pavers. Additional guide specifications and detail drawings for varioius applications are available at www.icpi.org as well as ICPI Tech Specs. Other ICPI Tech Specs and technical manuals should be referenced for information on design, detailing, construction and maintenance.

References

American Association of State Highway and Transportation Officials, *Standard Specification for Geotextile Specification for Highway Applications M288-06*, Washington, D.C., 2006

Interlocking Concrete Pavement Institute, *Concrete Paver Installer Course Handbook* Eighth Edition, Washington D.C., October 2011.

National Stone Association, *Flexible Pavement Design Guide for Roads and Streets.* Fourth Edition, Washington, D.C., January 1985.

National Stone Association, *Stone Base Construction Handbook,* Second Edition, Washington, D.C., September 1988.

Figures 1,2, 6, 7, 9, 10, 12 are courtesy of the Waterways Experiment Station, U.S. Army Corps of Engineers. Figure 5 is courtesy of the Portland Cement Association.

icpi

Interlocking Concrete Pavement Institute

14801 Murdock Street
Suite 230
Chantilly, VA 20151

Tel: 703.657.6900
Fax: 703.657.6901
E-mail: icpi@icpi.org
www.icpi.org

In Canada:
P.O. Box 1150
Uxbridge, ON L9P 1N4
Canada

The content of ICPI Tech Spec technical bulletins is intended for use only as a guideline. It is not intended for use or reliance upon as an industry standard, certification or as a specification. ICPI makes no promises, representations or warranties of any kind, expressed or implied, as to the content of the Tech Spec Technical Bulletins and disclaims any liability for damages resulting from the use of Tech Spec Technical Bulletins. Professional assistance should be sought with respect to the design, specifications and construction of each project.

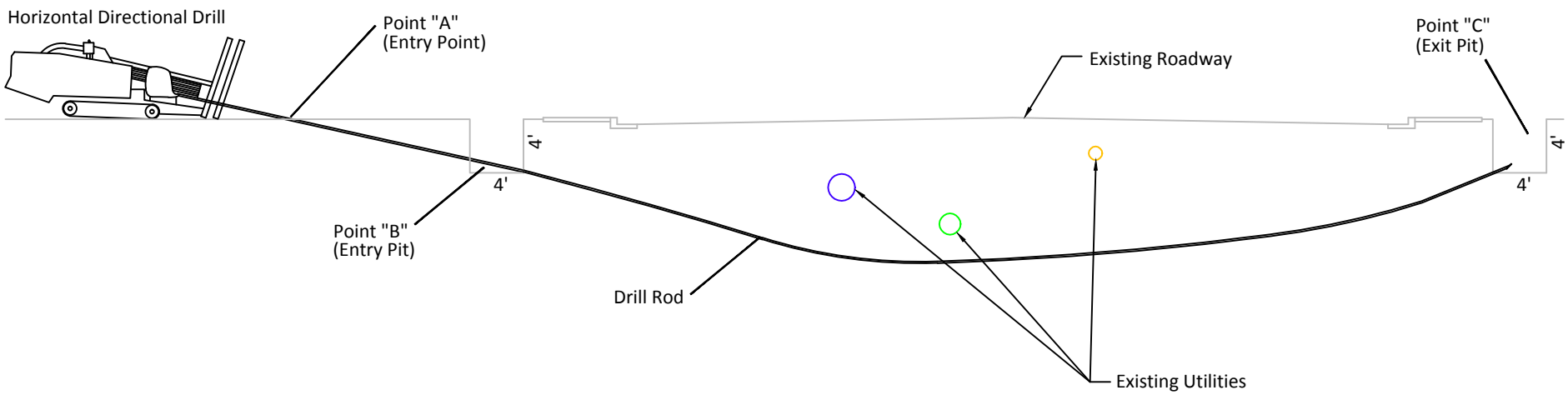

Notes:

1.) For every 1' of cover, entry point (Point"A") needs to be setback 10' from entry point (Point"B").
2.) Minimum setback is 40' from Point "A" to Point "B".
3.) Drill rod can handle 6" of steering every 10'.
4.) The size of the drill hole must have a minimum of 2' clearance from existing utilities.

DETAIL NO.	MARICOPA ASSOCIATION of GOVERNMENTS	STANDARD DETAIL ENGLISH	HDD typical layout	REVISED	DETAIL NO.

Curb Ramp Working Group Meeting

Meeting Notes
June 8, 2015

Opening:
The initial meeting of the Specifications and Details Curb Ramp Working Group was called to order by Warren White on June 8, 2015, at 1:00 p.m. in the MAG Cottonwood Room.

1. Introductions/Attendance
Xavier Estrada (Valley Metro), Brandon Forrey (Peoria), Rus Gordon (Gilbert), Bob Herz (Maricopa County), Cathy Hollow (Tempe), Mark Ivanich (Glendale), Craig Sharp (Buckeye), Gordon Tyus (MAG), Warren White (Chandler)

2. Curb Ramp Presentation by Brandon Forrey
Brandon Forrey provided a presentation on Peoria's efforts to develop dual-ramps. Although the current standard is ADAAG 2010, the ramps developed in Peoria are based on the 2011 Draft of the PROWAG, which is expected to be adopted and is considered a best practice. The presentation and standards are available on the MAG web site here:
https://www.azmag.gov/Events/Event.asp?CMSID=7205

Mr. Forrey also discussed the set of details developed by the City of Chicago based on the PROWAG standards.

3. City Supplements
Warren White showed examples of dual curb ramps details developed by the cities. These also have been posted at the link above.

4. Next Steps
Bob Herz suggested providing a draft detail for the committee to begin working on. The consensus of the group was to start with dual ramps for a 35' radius arterial intersection. Members agreed to continue meeting on the second Monday of the month. The next meeting is scheduled for July 13th.

5. Adjournment
The meeting was adjourned at 3:45 p.m.

Water/Sewer Working Group Meeting

Meeting Notes
June 18, 2015

Opening:
A meeting of the Specifications and Details Water/Sewer Working Group was called to order by Jim Badowich on June 18, 2015, at 1:35 p.m. in the MAG Cottonwood Room.

1. Introductions/Attendance
Jim Badowich (Avondale), Jami Erickson (Phoenix), Bob Herz (Maricopa County), Tony Ayala (Avondale), Peter Kandaris (Independent).

2. Case 15-01: Miscellaneous Corrections
Bob Herz brought up a conflict between specification Section 206 (Structure Excavation and Backfill) and Section 601 (Trench Excavation, Backfilling and Compaction) concerning the structural backfill requirements for manhole structures. Section 206.1 identifies manholes as a structure type covered by section 206. Section 206.4.2 requires backfill to be Select Material, Type A or B in Table 702-1 and Section 206.4.4 only allows ½ sack or 1 sack controlled low strength material as an alternative backfill material. The apparent conflict is in Section 601.2.6 which requires the excavation be backfilled with the same material required for the adjoining pipe line trench which could be native material for final backfill as allowed in Section 601.4.5.

This creates confusion concerning the required structure backfill around manholes. On a related note, the allowance of native material for the final backfill around manholes has been an ongoing concern to several agencies per various previous discussions regarding settlement. Jami Erickson noted that Section 625 (Manhole Construction and Drop Sewer Connections) referenced Section 601 for backfill requirements. Sections 505 and 625 should be reviewed for additional potential conflicts. Mr. Herz will submit an addition to ongoing Case 15-01.

3. Case 15-03: Revise Sect 601.4.5; Trench Final Backfill
Brief discussion on the recent comments regarding this case, in particular, clarifying the term “non-compacted” to “loose” and other minor changes.

4. New Case 15-12: Horizontal Drilling Directional Drilling (New Section 608)
Jim Badowich mentioned that the new MAG Section 608 was introduced by Arvid Veidmark at the June 3 committee meeting. He also stated that there was definite interest and already some in-depth discussions from the other agency members.

5. MAG Std Dtl 200-1; Backfill, Pavement and Surface Replacement
Jim Badowich discussed the desire to possibly revise or add another “Type” or section for the popular off-set surface course joint pavement replacement method that several agencies are currently requiring. The new “Type” would be a variation of the current Type “A” and Type “B” pavement replacements. Bob Herz added that this suggestion is already currently part of Case 14-12 as an alternative to a full depth sawed joint. It was also discussed if there should be separate details for just the pavement replacement options and possibly combine or remove the trench final backfill notes as they are the same for all of the trench repair Types.

6. Spec Section 611; Water, Sewer and Storm Drain Testing
Jim Badowich briefly discussed the desire to update the water line flushing section. The group discussed the possible addition of minimum orifice sizes to obtain adequate flushing removal of any foreign materials left in the pipes during installation. One concern mentioned was whether or not to specify methods or to what detail. Should the Disinfection testing requirements currently in MAG be intended to adequately verify and cover the foreign matter concern? Some further revisions and clarifications are probably needed to address the use of "construction water" as it relates to flushing including backflow and metering. Jami Erickson reiterated the need to update the chlorination material requirement.

7. MAG Std Dtl 320; Concrete Meter Boxes
Jim Badowich discussed the need to include the polymer concrete box material as an option as several agencies are now requiring. The dimensions and manufacture tolerances may also need to be updated. The addition of a traffic rated (H-20 load) box option should also be added. Jim asked if there are any agencies allowing PVC material. Various concerns were discussed regarding allowing the use of PVC boxes including UV degradation. Some cities may be "testing" PVC boxes but appears no cities are currently specifying. Jami Erickson said Phoenix is allowing polymer concrete lids with the standard concrete MAG boxes.

8. Outside ROW Specifications
Peter Kandaris, chair rep for the Outside ROW Group asked what priority items the Water/Sewer Working Group has. Jim Badowich stated that backflow prevention devices should be one of the first items addressed. Sewer grease interceptors and underground storm water detention systems were also suggested as priority items.

9. Next Meeting
Jim Badowich reminded everyone that the next Water/Sewer Working Group meeting is scheduled for July 16, 2015.

10. Adjournment
The meeting was adjourned at 3:00 p.m.

Association of General Contractors
1825 W. Adams, Phoenix Arizona 85007

Agenda

MAG Asphalt Working group meeting Thursday, June 25th 2015 @ ARPA 12:00pm Chairman- Jeff Benedict, Valero

1. Call to order and introductions
2. Review of cases and objectives
3. Case 14-06 revision to section 718 for preservative seal (Sam H, Mo Rahman)
4. Case 14-12 (MCDOT) pavement surface replacement (Bob Herz)
5. Case 14-17 stamped asphalt (decorative) placement (Greg G.)
6. Case 15-03 Backfill lift thickness. (Bob Herz)
7. Case 15-09 Section 321 density-temperature issue (Don C.)
8. Case 15-10 Section 321 compaction over poor base (Brian G.)
9. Case 15-11 Section 717 (asphalt Rubber) modification of incorporation of mineral filler (Greg Groneberg)
10. Other Business

Next meeting July 23rd Noon

Adjournment