August 30, 2016

TO: Members of the MAG Standard Specifications and Details Committee

FROM: Jim Badowich, City of Avondale, Chair

SUBJECT: MEETING NOTIFICATION AND TRANSMITTAL OF TENTATIVE AGENDA

Wednesday, September 7, 2016 at 1:30 p.m.
MAG Office, Suite 200 (Second Floor), Ironwood Room
302 North 1st Avenue, Phoenix

A meeting of the MAG Specifications and Details Committee has been scheduled for the time and place noted above. Members of the MAG Specifications and Details Committee may attend the meeting either in person, by videoconference or by telephone conference call. If you have any questions regarding the meeting, please contact Committee Chair Jim Badowich at 623-333-4222 or Gordon Tyus, MAG staff at 602-254-6300.

In 1996, the Regional Council approved a simple majority quorum for all MAG advisory committees. If the MAG Specifications and Details Committee does not meet the quorum requirement, no action can be taken. Attendance at the meeting is strongly encouraged.

Pursuant to Title II of the Americans with Disabilities Act (ADA), MAG does not discriminate on the basis of disability in admissions to or participation in its public meetings. Persons with a disability may request a reasonable accommodation, such as a sign language interpreter, by contacting Gordon Tyus at the MAG office. Requests should be made as early as possible to allow time to arrange the accommodation.

It is requested (not required) that written comments on active cases be prepared in advance for distribution at the meeting.

MAG Standard Specifications and Details Committee
TENTATIVE AGENDA
September 7, 2016

COMMITTEE ACTION REQUESTED

1. Call to Order and Introductions
   Introductions

2. Call to the Audience
   An opportunity is provided to the public to address the MAG Specifications and Details Committee on items that are not on the agenda that are within the jurisdiction of MAG, or non-action agenda items that are on the agenda for discussion or information only. Citizens will be requested not to exceed a three minute time period for their comments. A total of 15 minutes will be provided for the Call to the Audience agenda item, unless the committee requests an exception to this limit. Please note that those wishing to comment on agenda items posted for action will be provided the opportunity at the time the item is heard.

   2. Information.

3. Approval of August 3, 2016, Meeting Minutes

   3. **Review and approve minutes of the August 3, 2016 meeting.**

New Cases for 2016

4. Case 16-01: Misc. Corrections
   A. Revise Table 310-1 by deleting "or gradation deficiency" from the Deficiency column for Type IV.
   B. Correct arrow placement on Detail 507: Encased Concrete Pipe
   C. Add bullets back into Table 608-2 to make sure item 3. Surface Survey is included in medium and large projects.
   D. Modify Section 415.2 Material of Section 415 Flexible Metal Guardrail to require Type IV, Class A railing. (From Case 16-07)
   E. Correct Chain Link Fence Post Discrepancy. The required diameter for a 6' chain link fence line post is 2" per Table 772-1 and 1.5" per Detail 160.

   4. **Information, discussion & possible action.**
   Sponsors: Bob Herz, MCDOT
   Arvid Veidmark, AZUCA
   Updated

5. Case 16-02: Certificates of Compliance and Analysis
Add requirements for certificate of compliance and certificate of analysis. Add Section 106.2.1 Certificate of Compliance, add Section 106.2.2 Certificate of Analysis, and modify Section 717.2.1.2 Crumb Rubber.

5. **Information, discussion & possible action.**
Sponsor: Bob Herz, MCDOT

6. Case 16-05: DUAL CURB RAMPS.
New Details 236-1, 236-2, 236-3, 237-1, 237-2, 237-3 and revise Section 340.3.9 Tolerances.

6. **Information, discussion & possible action.**
Sponsor: Warren White, Chandler
Updated

7. Case 16-08 Valve Stem Extension Detail.
Separate Valve box Installation and Grade Adjustment. Revise Detail 391-2 to remove Valve Stem extension drawing. Create new Detail 393 for the Valve Stem Extension. Also update Details 391-1 and 270.

7. **Information, discussion & possible action.**
Sponsor: Craig Sharp, Buckeye
Updated

8. Case 16-10: Proposed new Section 719 and Section 326.
New POLYMER MODIFIED ASPHALT CONCRETE, Material and Placement Specifications.

8. **Information, discussion & possible action.**
Sponsor: Greg Groneberg, Asphalt WG
Updated

9. Case 16-11: Update to Section 309 Lime Stabilization or Modification of Subgrade.
Eliminate reference to AASHTO T-26 which has been discontinued.

9. **Information, discussion & possible action.**
Sponsor: Bob Herz, MCDOT
Updated

10. Case 16-13: New Detail 115.
Temporary Site Access With Trackout Pad.

10. **Information & discussion. Withdrawn.**
Sponsor: Bob Herz, MCDOT

11. Case 16-14: Revisions to Water Meter Box and Cover Details.
Details 310, 315, and 320.

11. **Information, discussion & possible action.**
Sponsor: Warren White, Chandler
Updated

12. Case 16-15: Proposed new Detail 319.
Traffic rated water meter box and cover.

12. **Information, discussion & possible action.**
Sponsor: Warren White, Chandler
Updated

13. Case 16-16: Revision to Section 717.
Change TSR method from AASHTO T-283 to ASTM D 4867 to be consistent with Section 710.

13. **Information, discussion & possible action.**
Sponsor: Greg Groneberg, Asphalt WG

14. Case 16-17: Revision to Section 321.
Address multiple concerns with testing for permit work.

14. **Information & discussion. Carry Forward.**
Sponsor: Greg Groneberg, Asphalt WG

General Discussion

15. Working Group Reports

15. Information and discussion.

- Curb Ramp WG Chair: Warren White
  08/15/2016 Meeting
- Water/Sewer WG Chair: Jim Badowich
  08/16/2016 Meeting
- Asphalt, Materials and Concrete WGs
  08/18/2016 Meeting
  Chairs: Greg Groneberg, Brian Gallimore and Jeff Hearne
- Outside ROW Chair: Peter Kandaris

16. General Discussion

Specs and Details Approval and Publication Process

16. Information and discussion.

17. Request for Future Agenda Items

Adjournment

17. Information and discussion.

MEETING MINUTES FROM THE
MARICOPA ASSOCIATION OF GOVERNMENTS
STANDARD SPECIFICATIONS AND DETAILS COMMITTEE

August 3, 2016

Maricopa Association of Governments Office, Ironwood Room
302 North First Avenue
Phoenix, Arizona

AGENCY MEMBERS

Tom Struve, Avondale, (proxy)
Craig Sharp, Buckeye
Warren White, Chandler, Vice Chair
* Nick Russo, El Mirage
* Jess Knudson, Florence
Tom Kaczmarowski, Glendale
Kent Westover, Gilbert (proxy) (audio)
Tom Vassalo, Goodyear (audio)
Bob Herz, MCDOT
Ryan Nichols, Mesa (proxy)
Dan Nissen, Peoria
Robert Duvall, Phoenix (Streets)
* Jami Erickson, Phoenix (Water)
Rod Ramos, Scottsdale
David Mobley, Surprise
Catherine Hollow, Tempe (proxy)
Jonathan Sorrell, Valley Metro
Gregory Arrington, Youngtown

ADVISORY MEMBERS

Greg Groneberg, ARPA
Jeff Hearne, ARPA
* Arvid Veidmark, AZUCA
* Tom Brennan, AZUCA
Brian Gallimore, AGC
Peter Kandaris, Independent
Paul R. Nebeker, Independent (audio)
Christina Buckle, SRP

MAG ADMINISTRATIVE STAFF

Gordon Tyus

* Members not attending or represented by proxy.

GUESTS/VISITORS

Chris Considine, Oldcastle
Troy McGahey, New Horizon Sales
Brian Sitarz, Oldcastle

1. Call to Order

Vice Chair Warren White called the meeting to order at 1:32 p.m.

Vice Chair White had new members introduce themselves. Tom Struve said he was filling in for Jim Badowich of Avondale, Catherine Hollow was a proxy for Tom Wilhite of Tempe, and Ryan Nichols of Mesa said he would be replacing Lance Webb on the committee. Mr. White also announced those on audio call (Tom Vassalo of Goodyear, Kent Westover, substituting for Tom Condit of Gilbert, and Paul Nebeker).

2. Call to the Audience

Vice Chair White announced the call to the audience. No members of the audience wished to speak.

3. Approval of Minutes

The members reviewed the July 6, 2016 meeting minutes. Vice Chair White asked if there were any revisions. Dan Nissen said his name was misspelled under item 13. Bob Herz said that under item 6 the text "contractor designee" should be "contracting agency." Mr. Hearne noticed his name was misspelled in the next sentence. Dan Nissen moved to accept the minutes with the revisions noted above. Bob Herz seconded the motion. A voice vote of all ayes and no nays was recorded.

New Cases for 2016

4. Case 16-01: Miscellaneous Corrections.

Vice Chair White asked if there were any new submissions. None were presented. He said the case would be up for a vote during the September meeting.

5. Case 16-02: Add Section 106.2.1 Certificate of Compliance, add Section 106.2.2 Certificate of Analysis, modify Section 717.2.1.2 Crumb Rubber, and modify several other sections as noted.

Bob Herz provided a revised version in the packet based on comments from the last meeting. This included adjustments to Section 106.2 (changing contracting agency to Engineer) and revising Sections 725.2 and 725.2.1 by adding the option of a certificate of analysis in addition to a certificate of compliance. Mr. Herz said he received no additional comments and would like to vote on the case in September.

6. <u>Case 16-05: Dual Curb Ramps. New Details 236-1, 236-2, 236-3, 237-1, 237-2, 237-3 and Revise Section 340.3.9 Tolerances.</u>

Warren White provided an updated case packet at the meeting which incorporated changes based on comments from the last committee meeting and the July 25th Curb Ramp Working Group meeting.

He summarized the purpose of the case as to incorporate new standard details for dual curb ramps (radial and directional) meeting latest ADA requirements, and revisions to Section 340 for maximum grade allowances and measurement. The intention is for construction details to have the "build to" slopes/grades that will allow for tolerance while the specification provides the maximum limits for acceptance.

He said revisions mainly were to the 20' radius ramps but also included the following:

- Revised all details removing table with ramp and wing lengths since lengths will vary depending on curb height and other factors. More flexibility and in-line with many current jurisdiction details.
- Revised both 20' radius details (236-3 and 237-3), moving expansion joint beyond PC/and options for curb transition requirements.
- Removed the "ROUGH" from the broom finish callout on all details.
- Added note on 236-1 and 236-2 for the minimum 4'x 4' turning space to keep within crosswalk.
- No changes to Section 340.3.9 Tolerances from previous package.
- Minor change to Section 340.5 Measurement from previous package.

Mr. White then began discussion on the individual ramp details. Ryan Nichols asked about the 5' maximum allowance between the detectable warning and the back of curb on directional ramps. He thought this might be used as a path of travel where the pedestrian could miss the detectable warning entirely and go out into the street. Bob Herz said the detectable warning had to be parallel to the direction of travel. Mr. White said the 5' maximum was what was allowed by the draft PROWAG requirements and the placement of the domes on the ramp slope met PROWAG as well.

Catherine Hollow asked that since dual ramps are now the preferred practice, if the single ramp detail should be removed. Mr. Herz said that a single ramp is still allowed, but revising or removing them could be done as a separate case. Mr. White noted that the Ramp A and Ramp B notes on the new details allow for the use of just one in certain cases, and that it would make sense to have approved dual ramps before deleting the single ramp details.

Bob Herz agreed that removing the length dimensions of the ramps for directional ramps made sense, but he thought the radial ramps could have the ramp lengths calculated. He noted the sidewalk slopes should match the standards, and that at the County they order the preference of the ramps used as directional, then combination and finally radial. Warren White said the ramp length was discussed during the working group meetings and they were never able to find the "sweet spot" that worked for everyone. He noted that even on radial ramps, location of poles, right-of-way lines, etc. all affected ramp location and length, and that flexibility was needed.

Next Mr. White asked for comments on Section 340.9 Tolerances. Rod Ramos thought the slope requirements would supersede the elevations when it came to the ramps. Brian Gallimore agreed, stating that when constructing the ramps they start with the elevation layouts, but then are adjusted to meet ADA slope requirements. Rod Ramos suggested rewording the last sentence of this subsection to this effect. Craig Sharp said the curb is where you get your elevations, and thinks for new construction elevations should be used. Warren White said the directional ramp details now show elevations. The group agreed to keep them.

There was also discussion about the change in tolerance from 1/2" to 1/4". Mr. Herz said this was changed to make sure tolerances didn't exceed slope requirements, but if the slope governed over elevations it could be changed back. He noted joints between sidewalks were only 1/4". Mr. White said he would make revisions to the last sentence to clarify that the slopes supersede elevations.

Next the group reviewed Section 340.5 Measurements. Mr. White noted that the front showed the revisions, the back was a clean copy. The major issue is that the ramps are measured by quantity rather than by square foot. Mr. White said he would do a final review at the next Curb Ramp Working Group meeting, and have a final version ready to vote on in September. Mr. Herz asked that changes be distributed to member agencies as early as possible for review.

7. <u>Case 16-08: Valve Stem Extension Revisions.</u>

Craig Sharp said the current case incorporated all of the comments provided by Bob Herz at the last meeting. Bob Herz had additional comments on the details. On Detail 270 he asked to change the fractions so they were not stacked and the text size was larger to be consistent. Regarding Note 2, he asked who submits the lettering for approval? He also asked if the steel hoop should be the default or not? Mr. Sharp said they were trying to be inclusive since some agencies use steel in the concrete collar and some don't. He noted Phoenix uses it in all cases, and Buckeye only in collars outside the street. Tom Sturve suggested including it and then requiring agencies that don't want it to supplement it out. Brian Gallimore said contractors could go either way, they just need to know the agency's preference. Some thought it was helpful, but it also makes maintenance of removing collars more difficult. Mr. Herz thought the location of the hoop should be dimensioned. Craig Sharp said the language for centering it horizontally and vertically came from Detail 422 Manhole Frame and Cover Adjustment. The final consensus was to leave the steel hoop in but remove the text "IF REQUIRED BY AGENCY."

On Detail 391-1 Bob Herz suggested removing the "SEE NOTE 5" on the Type A detail since it already refers back to Detail 270. He said the note for the cover detail could also refer back to Detail 270. Craig Sharp said he could make those changes and also remove the text "IF REQUIRED BY AGENCY" from Note 5.

On Detail 391-2, Mr. Herz said a few of the notes could be removed since they are already on Detail 270. Notes 2, 3 and 6 can be removed, and the others renumbered in the notes and on the drawing. Finally on Detail 393 he asked to change the fractions to be consistent, get rid of

abbreviations, and make the text height a little larger. Mr. Sharp said he would make the revisions, review the case at the next Water/Sewer working group meeting, and will plan to vote on it at the next committee meeting.

8. Case 16-10: Proposed new Section 719 and Section 326. New POLYMER MODIFIED ASPHALT CONCRETE, Material and Placement Specifications.

   Greg Groneberg said a large packet for this case was included in the mail out. The new Section 719 was not changed since the last meeting. The packet included a revised Section 321 marked up to the proposed Section 326 in order to show the changes made. These included changes in allowed temperatures as well as elimination of specifications related to warm mix. At the last Asphalt Working Group meeting Don Cornelison proposed changes to the mix voids tables to have a range based on the mix design. This would be a new case for next year.

   He noted that there was one warm mix note in 326.7 that needed to be fixed. The case would be discussed further at the Asphalt Working Group meeting on August 18th at noon at the ARPA office. Mr. Groneberg said he would like to vote on the case in September.

9. Case 16-11: Update to Section 309 Lime Stabilization or Modification of Subgrade

   Bob Herz made adjustments based on feedback from the last meeting. In Section 309.2.4 the last sentence stating, "Water known to be of potable quality may be used without test" was undeleted. The last sentence of Section 309.3.1 tried to clarify that if potable water is used, the pH value does not need to be included. Mr. Kandaris suggested adding a couple commas for clarity so it read, "The mix design shall identify the water source to be used during construction and, if not from a potable source, the water's pH value." Mr. Herz proposed voting on the case next month.

10. Case 16-13: Proposed New Detail 115 Temporary Site Access with Trackout Pad

    Mr. Herz provided an updated detail at the meeting that made revisions to Note 3 and Note 9. Brian Gallimore said AGC was concerned that this detail may start to be required on small sites. Mr. Herz said Note 1 points out that it is for large construction sites. Mr. Gallimore said that once it is out there, the air quality department might start requiring it for dust control on smaller sites anyway. Ryan Nichols asked what was considered a "small site." Tom Kaczmarowski said that the current rules have sites 1 acre or larger classified as large. Mr. Gallimore also asked about the duration of the project and how that could affect whether it is necessary.

    Ryan Nichols said the trackout pad did not need to be dimensioned, but did ask if there was a minimum for the asphalt concrete. Mr. Herz said right now there is a 12' minimum, but it varied depending on the right-of-way. His preference was to make it as large as possible to

keep rocks off the roadway. Mr. Herz said he would make final adjustments and called for a vote at the next meeting.

11. Case 16-14: Proposed revisions to water meter box and cover details. Revised Details 310-314, 320 and add new Detail 315 for polymer concrete meter box lids.

    A revised version of the case was provided in the agenda packet that included revisions based on comments from the committee and Water/Sewer Working Group. Mr. Herz asked that fractions be shown as larger numbers with slashes. He also said in Note 2 you need to add the word 'cover' and also asked about the paint and the color. Mr. Sitarz explained that Pantone is an industry standard color matching system. Mr. Herz asked if the type of paint itself was specified. Mr. Sitarz said he would see if he could find a standard for it. On Detail 310, Mr. Herz asked if thickness of the steel lid was specified. Mr. White said it was shown as dimension N at the bottom of the table.

    On Detail 315, Bob Herz asked what AMR stood for. Mr. Sitarz said it was short for automatic meter readers, that there were two main types, and the size worked with either. He said he could spell out AMR on the detail. Mr. Herz also asked if "Injected Molded" was necessary in Note 3. The industry representatives said most thermoplastics are made through injection molding, but the text was not necessary. Next Mr. Herz asked if the recessed text needed to be dimensioned. It was decided that the height of the text could be dimensioned, but amount of recess was not important, and if specified, may cause other manufactures to change the molds. It was also suggested to be consistent on using the term "pick hole" instead of "lift slot" on Detail 310.

    On Detail 320, Bob Herz questioned why Note 4 included "TO 10,000 lbs.", if 3,000 lbs. is the minimum load rating. Mr. Sitarz explained that anything over 10,000 lbs. would require a traffic rated box. Since the traffic rated box would be specified when needed anyway, it was thought that the "TO 10,000 lbs." could be removed. Also to clarify that these boxes were for non-traffic relate applications, that text could be added to the title of the detail.

    Warren White said they would make updates, review the details at the working group meeting, and will plan to vote on the case in September.

12. Case 16-15: Proposed new Detail 319 Traffic Rated Box and Cover

    The traffic-rated box Detail 319 was updated based on feedback at the committee and working group meeting. Mr. Herz asked what the numbers 1324 and 1730 in the table were. Mr. Sitarz said these are the industry standard designations used for traffic rated boxes, based on their size. He said these are common sizes made by many manufacturers. It comes as a complete unit designed to meet AASHTO H20 loading requirements. Mr. Herz asked why Note 6 was added. Craig Sharp said it was suggested by the working group because typically there needs to be a concrete collar when making grade adjustments.

Catherine Hollow asked about the bedding requirements under the box. Note 5 states it must be compacted to 95% maximum density. It was also suggested to add a note on the cover detail to refer to Note 3 for the utility markings. Warren White wished to call for a vote on the case next month.

At this point of the meeting, the group was about to lose a quorum of voting members. Vice Chair White quickly wrapped up the meeting by determining the voting status of the remaining cases and the dates of upcoming working group meetings as shown below.

13. Case 16-16: Revision to Section 717. Change TSR method from AASHTO T-283 to ASTM D 4867 to be consistent with Section 710.

    Due to a loss of quorum, this item was not discussed. It will be on the agenda for action at the next meeting.

14. Case 16-17: Revision to Section 321: Address multiple concerns with testing for permit work.

    Due to a loss of quorum, this item was not discussed. It will be on the agenda for action at the next meeting.

15. Working Group Reports

    Since the meeting ended due to a lack of quorum, oral working group reports were not provided; however, a summary of the previous meeting notes was provided. They have also been posted on the MAG website: http://www.azmag.gov/Events/Event.asp?CMSID=8365

    a. **Curb Ramp Working Group**
       The working group notes were handed out at the meeting. The next meeting of the Curb Ramp Working Group is scheduled for Monday, August 15th, at 1:00 p.m. in the MAG Cholla Room.

    b. **Water/Sewer Issues Working Group**
       The working group notes were provided in the agenda packet. The next meeting of the Water/Sewer Working Group is scheduled for Tuesday, August 16th, at 1:30 in the MAG office.

    c. **Asphalt, Materials and Concrete Working Groups**
       The Asphalt/Materials WG notes were provided in the packet, and the Concrete WG notes were handed out at the meeting. The next meeting of the joint Asphalt/Materials and Concrete Working Groups is scheduled for Thursday, August 18th at noon. The meetings will be held in the ARPA office, 916 W Adams Street, Phoenix.

d. **Outside ROW Working Group**
Peter Kandaris handed out an outline providing the status of the Outside Right-of-Way specifications and details currently under review. This is also provided at the web link above.

16. Adjournment

Vice Chair Warren White adjourned the meeting at 3:32 p.m.

2016 PROPOSED REVISIONS TO MAG SPECIFICATIONS AND DETAILS

(Updated information can be found on the website: http://www.azmag.gov/Projects/Project.asp?CMSID=1055&CMSID2=7154)

CASE	DESCRIPTION	PROPOSED BY	MEMBER	SUBMITTAL DATE Last Revision	VOTE DATE	VOTE	
	CARRY FORWARD CASES FROM 2015						
15-05	Case 15-05: Proposed Revisions to Section 616 Reclaimed Water Line Construction and NEW Reclaimed Valve Box detail 270-2. Update Detail 270-1.	Chandler	Warren White	03/04/2015 04/06/2016	Voted: 04/06/2016	10 0 2	Yes No Abstain
15-10	Case 15-10: Add subsection 321.10.5.3 “Rehabilitation Work” into the MAG Specifications.	Materials WG	Brain Gallimore	06/03/2015 07/23/2015	Withdrawn 02/03/2016	0 0 0	Yes No Abstain
15-13	Case 15-13: Add text to Section 725.6 to identify what to include in a concrete mix design submittal.	Concrete WG	Jeff Hearne	06/03/2015 04/21/2016	Voted: 07/06/2016	14 0 0	Yes No Abstain
	NEW CASES FOR 2016						
16-01	**Case 16-01: Miscellaneous Corrections:** A. Revise Table 310-1 by deleting “or gradation deficiency” from the Deficiency column for Type IV. B. Correct arrow placement on Detail 507: Encased Concrete Pipe C. Add bullets back into Table 608-2 to make sure Item 3. Surface Survey is included in medium and large projects. D. Modify Section 415.2 Material of Section 415 Flexible Metal Guardrail to require Type IV, Class A railing. (From Case 16-07) E. Correct Chain Link Fence Post Discrepancy. The required diameter for a 6’ chain link fence line post is 2” per Table 772-1 and 1.5” per Detail 160.	MCDOT	Bob Herz, Arvid Veidmark	01/06/2016 08/23/2016	Scheduled: 09/06/2016	0 0 0	Yes No Abstain
16-02	Case 16-02: Add requirements for certificate of compliance and certificate of analysis. Add Section 106.2.1 Certificate of Compliance, add Section 106.2.2 Certificate of Analysis, and modify Section 717.2.1.2 Crumb Rubber.	MCDOT	Bob Herz	01/06/2016 07/06/2016	Scheduled: 09/06/2016	0 0 0	Yes No Abstain

2016 PROPOSED REVISIONS TO MAG SPECIFICATIONS AND DETAILS

(Updated information can be found on the website: http://www.azmag.gov/Projects/Project.asp?CMSID=1055&CMSID2=7154)

CASE	DESCRIPTION	PROPOSED BY	MEMBER	SUBMITTAL DATE Last Revision	VOTE DATE	VOTE	
16-03	Case 16-03: Revision to Detail 251 RETURN TYPE DRIVEWAYS. Adjust concrete thickness and concrete class for commercial and industrial driveways to match requirements shown on Detail 250.	MCDOT	Bob Herz	01/06/2016 02/04/2016	Voted: 04/06/2016	12 0 0	Yes No Abstain
16-04	Case 16-04: Review and adjust Section 340.2.1 for withdrawn ASTM C1028 reference.	MCDOT	Bob Herz	02/03/2016 02/04/2016	Voted: 04/06/2016	12 0 0	Yes No Abstain
16-05	Case 16-05: Dual Curb Ramps. New Details 236-1, 236-2, 236-3, 237-1, 237-2, 237-3 and revise Section 340.3.9 Tolerances.	Chandler/ Curb Ramp WG	Warren White	03/02/2016 08/22/2016	Scheduled: 09/06/2016	0 0 0	Yes No Abstain
16-06	Case 16-06: Update Section 727 Steel Reinforcement to replace withdrawn ASTM A82 and A185 with ASTM A1064.	MCDOT	Bob Herz	04/06/2016	Voted: 05/04/2016	15 0 1	Yes No Abstain
16-07	Case 16-07: Add Atmospheric Corrosion Resistance Low-Alloy Steel (Corten steel) to the Material portion of Section 415 Flexible Metal Guardrail.	MCDOT	Bob Herz	04/06/2016 04/26/2016	Voted: 05/04/2016	15 0 1	Yes No Abstain
16-08	Case 16-08: Separate Valve box Installation and Grade Adjustment. Revise Detail 391-2 to remove Valve Stem extension drawing. Create new Detail 393 for the Valve Stem Extension. Also revise Details 391-1 and 270.	Buckeye Water/Sewer WG	Craig Sharp	05/04/2016 08/15/2016	Scheduled: 09/06/2016	0 0 0	Yes No Abstain
16-09	Case 16-09: Revisions to Section 710 to remove low volume Gyratory and Marshall mixes.	Asphalt WG	Greg Groneberg	05/04/2016 06/20/2016	Voted: 07/06/2016	14 0 0	Yes No Abstain
16-10	Case 16-10: Proposed new Section 719 and Section 326. New POLYMER MODIFIED ASPHALT CONCRETE, Material and Placement Specifications.	Asphalt WG	Greg Groneberg	06/01/2016 08/23/2016	Scheduled: 09/06/2016	0 0 0	Yes No Abstain
16-11	Case 16-11: Update to Section 309 Lime Stabilization or Modification of Subgrade	MCDOT	Bob Herz	06/01/2016 08/03/2016	Scheduled: 09/06/2016	0 0 0	Yes No Abstain
16-12	Case 16-12: Revision to Alteration of Work Section 104.2.1	MCDOT	Bob Herz	06/01/2016	Withdrawn 07/06/2016	0 0 0	Yes No Abstain

2016 PROPOSED REVISIONS TO MAG SPECIFICATIONS AND DETAILS

(Updated information can be found on the website: http://www.azmag.gov/Projects/Project.asp?CMSID=1055&CMSID2=7154)

CASE	DESCRIPTION	PROPOSED BY	MEMBER	SUBMITTAL DATE Last Revision	VOTE DATE	VOTE	
16-13	Case 16-13: Proposed New Detail 115 Temporary Site Access with Trackout Pad	MCDOT	Bob Herz	06/01/2016 08/05/2016	Withdrawn 08/29/2016	0 0 0	Yes No Abstain
16-14	Case 16-14: Proposed revisions to water meter box and cover details. Revised Details 310-314, 320 and add new Detail 315 for polymer concrete meter box lids.	Chandler/ Water/Sewer WG	Warren White	06/01/2016 08/23/2016	Scheduled: 09/06/2016	0 0 0	Yes No Abstain
16-15	Case 16-15: Proposed new Detail 319 Traffic Rated Water Meter Box and Cover	Chandler/ Water/Sewer WG	Warren White	06/01/2016 08/29/2016	Scheduled: 09/06/2016	0 0 0	Yes No Abstain
16-16	Case 16-16: Revision to Section 717. Change TSR method from AASHTO T-283 to ASTM D 4867 to be consistent with Section 710.	Asphalt WG	Greg Groneberg	07/06/2016 07/21/2016	Scheduled: 09/06/2016	0 0 0	Yes No Abstain
16-17	Case 16-17: Revisions to Section 321: Address multiple concerns with testing for permit work.	Asphalt WG	Greg Groneberg	07/06/2016	Carry Forward	0 0 0	Yes No Abstain

MARICOPA COUNTY
Department of Transportation

MEMORANDUM

Date: January 8, 2016

To: MAG Specifications and Details Committee

From: Robert Herz, MCDOT Representative

Subject: Miscellaneous Corrections **Case 16-01A**

PURPOSE: Delete extraneous text.

REVISION: In Section 310 PLACEMENT AND CONSTRUCTION OF AGGREGATE BASE COURSE revise Table 310-1 by deleting "or gradation deficiency" from the Deficiency column for Type IV.

310.4 THICKNESS AND/OR PLASTICITY INDEX DEFICIENCY:

When in the opinion of the Engineer there is reason to believe that a deficiency in thickness, or an excess of plasticity exists, measurements or samples will be taken in the same pattern as that defined in Section 321. If the base has been covered or it is otherwise impractical to correct the deficiency, the corrective measures in Table 310-1 shall be taken by the Contractor at no additional cost to the Contracting Agency.

TABLE 310-1

THICKNESS AND PLASTICITY DEFICIENCY

Type	Deficiency	Corrective Measure
I	Less than 1/2 inch of the required thickness	No corrective measure required.
II	1/2 inch or more but less than 1inch of the required thickness	(1) The contractor may choose to add additional material and rework the grade to meet the specification requirements. (2) The contractor may choose to increase the thickness of asphalt concrete by the amount of the aggregate base course thickness deficiency at no additional cost to the Owner. Required grade shall be met.
III	Thickness deficiency by greater than 1 inch	(1) The contractor will remove the aggregate base course and regrade the subgrade to allow the required aggregate base course layer thickness to be constructed. (2) If grades allow, the contractor may propose that the thickness of asphalt concrete be increased by the amount of the aggregate base course deficiency at no additional cost to the Owner.
IV	A plasticity index of 6 to 7 inclusive ~~or gradation deficiency~~	(1) An Engineering Analysis (EA) that includes R-value testing may be prepared by the contractor to evaluate the expected performance of the aggregate base course layer. The EA may provide mitigation options for the Engineer to consider. If the Engineer accepts the plasticity index as a result of the EA, the material will be accepted at full payment. If the Engineer rejects the EA, the contractor will perform either option 2 or 3 below. (2) The contractor may choose to reprocess or treat the existing material to bring it within specification limits or remove deficient material from affected area and replace with material complying with the specifications. (3) If grades allow, the contractor may increase the thickness of asphalt concrete by ½-inch at no additional cost to the Owner.
V	A plasticity index of over 7	(1) The contractor may choose to reprocess or treat the existing material to bring it within specification limits or remove deficient material from affected area and replace with material complying with the specifications.

2901 West Durango Street Phoenix, Arizona 85009 Phone: 602-506-4760 Fax: 602-506-5969

NOTES:

1. THIS DETAIL SHALL BE REQUIRED WHEN NEW OR EXISTING PIPE INSTALLATIONS WILL BE SUBJECT TO DAMAGE ANYTIME IN THE FUTURE DUE TO LACK OF PROPER COVER, AS DETERMINED BY THE ENGINEER.
2. FOR PIPE OVER 18" I.D. WOOD, METAL OR GYPSUM BOARD FORMS MUST BE USED TO FORM THE SIDES OF THE ENCASEMENT. GYPSUM BOARD FORMS MAY BE LEFT IN THE GROUND BELOW THE TOP OF THE ENCASEMENT. THIS SHALL BE OPTIONAL WITH POURING AGAINST TRENCH WALLS FOR ENCASEMENT OF 18" AND SMALLER PIPE.
3. FOR ALL SITUATIONS WHERE SIDE FORMS ARE USED, TRENCH WALLS SHALL BE OVER-EXCAVATED TO ALLOW SUFFICIENT ROOM TO OPERATE PROPER MECHANICAL COMPACTION EQUIPMENT.
4. CONCRETE WHICH SPILLS BEYOND 12" FROM THE SIDES OF THE PIPE FOR ANY REASON SHALL BE REMOVED BACK TO THE PROPER LINE PRIOR TO BACKFILLING.
5. SEE SECTION 601 FOR TRENCH PREPARATION.
6. CONCRETE TO BE CLASS 'A' PER SECT. 725.
7. COVER TO BE APPROVED BY ENGINEER.

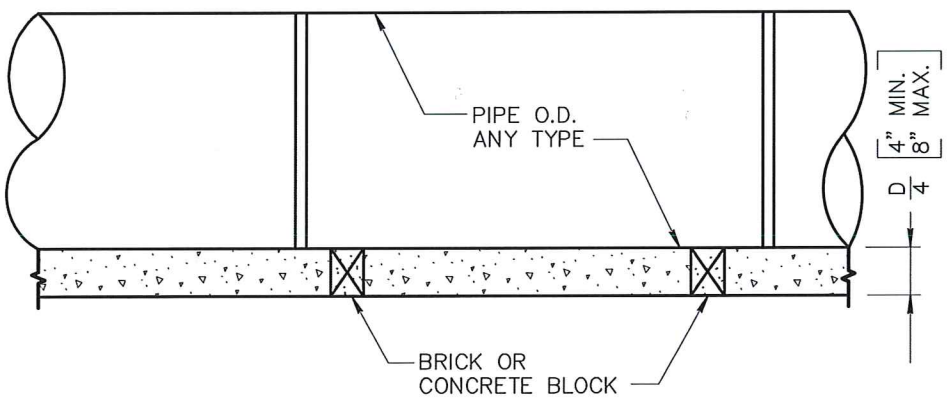

LONGITUDINAL SECTION

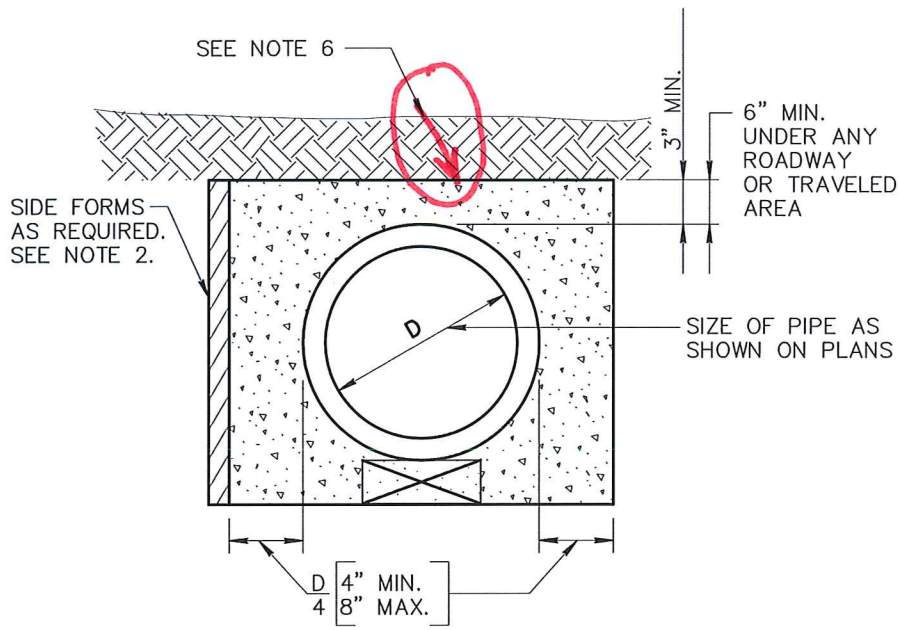

END SECTION

DETAIL NO.				REVISED	DETAIL NO.
507	MARICOPA ASSOCIATION of GOVERNMENTS	STANDARD DETAIL ENGLISH	ENCASED CONCRETE PIPE (FOR SHALLOW INSTALLATION)	01-01-1998	507

CASE 16-01 B

608.4 RECORD DOCUMENTS AND SUBMITTAL REQUIREMENTS:

Submittal requirements are based on the bore size classification as shown in Table 608-2. The required items contained in items 1 through 10 shall be submitted prior to the authorization to commence field construction. Copies of all documents shall be maintained at the construction site and be available for inspection.

TABLE 608-2			
SUBMITTAL REQUIREMENTS			
	Bore Size Classification		
Required Record Document	Small	Medium	Large
1. Agency Approved Plans	•	•	•
2. Personnel Qualifications	•	•	•
3. Surface Survey		•	•
4. Bore Plan/Profile		•	•
5. Drilling Fluid Management Plan		•	•
6. Equipment & Site Setup			•
7. Drilling Fluid Pressure Calculations			•
8. Pipe Stress and Pullback Calculations			•
9. Bore Data	•	•	•
10. As-Built	•	•	•

608.4.1 Agency Approved Plans: The facility owner shall submit plans for approval to the Agency in whose right-of-way the facility owner is proposing to install the new utility. Any changes from the approved plans will require a re-submittal of plans and re-approval. Plans are to identify the location of all property lines, right-of-way, and easements within the project construction limits. No work is to take place outside of the construction limits as shown on the agency approved plans.

608.4.2 Personnel Qualifications: The Contractor shall provide a competent and experienced individual familiar with the equipment and the type of HDD operations to be performed. The individual shall be present onsite while HDD operations are being performed and be in direct charge and control of the HDD operations. Documentation of experience and appropriate training evidenced by a certificate of attendance from a training program shall be provided upon request.

608.4.3 Surface Survey: A surface survey is not required for small bores unless specified by contract or permit documents. A surface survey requires the contractor prior to starting the drilling operation to submit to the Engineer a surface survey of elevations along the planned bore alignment, the maximum interval between elevations shall be ten feet (10'). Upon completion of the installation of the product pipe, the Contractor shall have a second survey performed and shall have the elevations compared with the pre-bore survey elevations. The second survey and the comparative results shall be submitted to the Engineer. Any change in elevation of a paved surface greater than ½" shall be considered excessive and shall be repaired at the Contractor's expense. Any elevation deviation of a paved flow line that is greater than ¼" shall be considered excessive and shall be repaired at the Contractor's expense.

608.4.4 Bore Plan/Profile: A scaled plan and profile drawing of the proposed pilot bore shall be submitted by the Contractor. The bore plan/profile shall show existing surface features and grade, the proposed pilot bore size and path, and all existing utilities with dimensioned vertical and horizontal clearances.

608.4.5 Drilling Fluid Management Plan: Indicate the type and amount of the drilling fluid planned to be used on the project. Include safety data sheets for the identified drilling fluid components and additives. The drilling fluid plan is developed based upon the anticipated soil conditions, and a sufficient supply of fluid is to be available to enable successful completion of the bore. Indicate the intended method of disposal of spent drilling fluids and

MARICOPA COUNTY
Department of Transportation

MEMORANDUM

Date: August 23, 2016

To: MAG Specifications and Details Committee

From: Robert Herz, MCDOT Representative

Subject: Miscellaneous Corrections **Case 16-01D**

PURPOSE: Revise the Class for Type IV (weathering steel) guardrail from B to A. Class A and Class B identify the steel thickness of the guardrail, Class B being 0.135 inches and Class A being 0.105 inches. Class A guardrail is readily available from suppliers while Class B guardrail is a special order item that can take months to obtain. The guardrail historically provided has been Class A.

REVISION: Case 16-07 added weathering steel guardrail specifications to the Materials portion of Section 415 Flexible Metal Guardrail. The paragraph added by Case 16-07 is to be modified as indicated below.

Guardrail specified to be constructed with weathering steel (sometimes called Corten steel) shall conform to the requirements of AASHTO M 180, Type IV, Class ~~B~~ A and use ASTM A588 steel.

2901 West Durango Street Phoenix, Arizona 85009 Phone: 602-506-4760 Fax: 602-506-5969

MARICOPA COUNTY
Department of Transportation

MEMORANDUM

Date: August 23, 2016

To: MAG Specifications and Details Committee

From: Robert Herz, MCDOT Representative

Subject: Miscellaneous Corrections **Case 16-01E**

PURPOSE: Correct Chain Link Fence Post Discrepancy. The required diameter for a 6' chain link fence line post is 2" per Table 772-1 and 1.5" per Detail 160.

REVISION: Adjust Table 772-1 to match Detail 160. This will make MAG requirements match the size required by ADOT Drawing number C-12.20.

TABLE 772-1
FENCE MEMBER SIZES & WEIGHTS

USE	FENCE FABRIC HEIGHT (Feet)	NPS DESIGNATOR	OUTSIDE DIAMETER (Inches)	WEIGHT (Lb/Lf Minimum)	
				TYPE A Schedule 40	TYPE B and C
FENCE POSTS					
End, corner, slope, pull and strain posts	Less than 6	2	2.375	3.65	3.12
	6 and over but less than 9	2 1/2	2.875	5.79	4.64
	9 and over but not over 12	3 1/2	4.000	9.11	6.56
Line posts	~~less than~~ not over 6	1 1/2	1.900	2.72	2.28
	~~6 and~~ over 6 but less than 9	2	2.375	3.65	3.12
	9 and over but not over 12	21/2	2.875	5.79	4.64
GATE POSTS					
Single swing gates 6 feet or less in width or double swing gates 12 feet or less	less than 6	2	2.375	3.65	3.12
	6 and over but not over 12	3 1/2	4.000	9.11	6.56
Single swing gates over 6 feet but not over 13 feet in width or double swing gates over 12 feet but not over 26 feet in width	—	3 1/2	4.000	9.11	6.56
Single swing gates over 13 feet but not over 18 feet in width of double swing gates over 26 feet but not over 36 feet in width	—	6	6.625	18.97	—
Single swing gates over 18 feet in width or double swing gates over 36 feet in width	—	8	8.625	28.55	—
OTHER MEMBERS					
Top rail and braces	—	1 1/4	1.666	2.27	1.84
Frame for gates	—	1 1/2	1.900	2.72	2.28
Stiffners for gates	—	1 1/4	1.666	2.27	1.84

2901 West Durango Street Phoenix, Arizona 85009 Phone: 602-506-4760 Fax: 602-506-5969

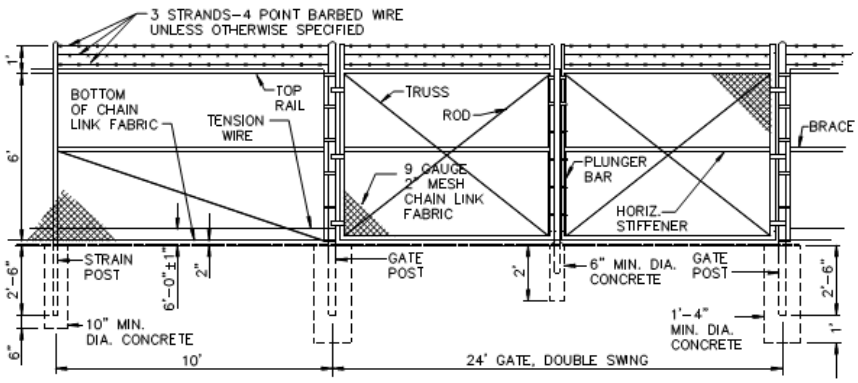

NOTES

1. ALL CONCRETE SHALL BE CLASS 'C' PER SECT. 725.
2. FITTINGS NOT SPECIFICALLY DETAILED SHALL BE HEAVY DUTY DESIGN.
3. STRAIN POSTS SHALL BE SPACED AT 500' MAXIMUM SPACING.
4. BOTH CORNER AND STRAIN POSTS SHALL HAVE STRAIN PANELS.
5. ALL POSTS SHALL BE CAPPED.
6. MEMBER SIZES SHALL BE THE FOLLOWING:

MEMBER	AISC SIZE	OUTSIDE DIA.
CORNER POST	2-1/2"	2.875"
LINE POST	1-1/2"	1.900"
STRAIN POST	1-1/2"	1.900"
BRACE	1-1/4"	1.666"
STRETCH BAR	3/16"x3/4" FLAT	3/16"x3/4" FLAT
GATE POST	3-1/2"	4.000"
TOP RAIL	1-1/4"	1.666"

7. CONSTRUCTION AND MATERIALS SHALL CONFORM TO SECT. 420 AND 772, RESPECTIVELY. SEE TABLE 772-1 FOR WEIGHTS OF MEMBERS.

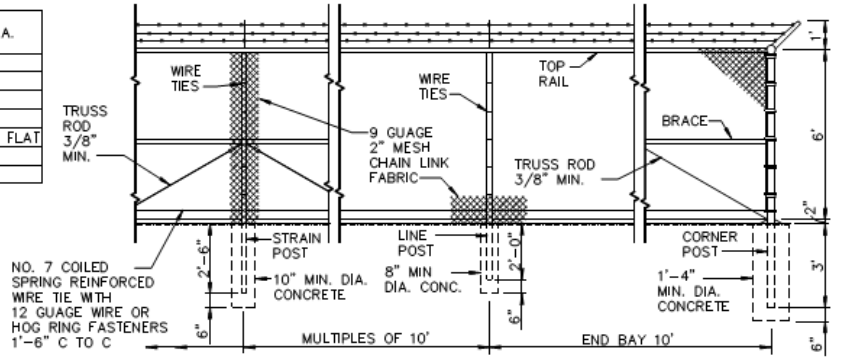

DETAIL NO.		STANDARD DETAIL		REVISED	DETAIL NO.
160	MARICOPA ASSOCIATION of GOVERNMENTS	ENGLISH	6' CHAIN LINK FENCE AND GATE	01-01-2013	160

MARICOPA COUNTY
Department of Transportation

MEMORANDUM

Date: January 6, 2016 Revised 2016-07-06

To: MAG Specifications and Details Committee

From: Robert Herz, MCDOT Representative

Subject: Add to Section 106.2 the requirements for certificate of compliance and certificate of analysis. **Case 16-02**

PURPOSE: Define the requirements for certificate of compliance and certificate of analysis referenced in Section 106.2 and modify section **717.2.1.2 Crumb Rubber** to delete references to ADOT specifications for certificates of compliance.

REVISIONS: Add section **106.2.1 Certificate of Compliance**, add section **106.2.2 Certificate of Analysis**, modify section **717.2.1.2 Crumb Rubber**, and modify other various locations within the specifications to have the submission of certificates to the Engineer be upon request.

SECTION 106 - CONTROL OF MATERIALS

106.2 SAMPLES AND TESTS OF MATERIALS:

All materials to be incorporated in the work may be subject to sampling, testing and approval, and samples furnished shall be representative of the materials to be used. The Engineer may select samples, or may require that samples be delivered by the Contractor to a laboratory designated by the Engineer.

The Contracting Agency will pay for the initial or normal test required by the Engineer to guard against unsuitable materials or defective workmanship. Additional tests, required due to failure of the initial or normal test(s), shall be paid for by the Contractor. The Engineer will designate the laboratory which will accomplish the additional test(s).

The procedures and methods used to sample and test materials will be determined by the Engineer. Unless otherwise specified, samples and tests will be made in accordance with either: the Materials Testing Manual of the Contracting Agency; the standard methods of AASHTO or ASTM, which were in effect and published at the time of issuance of the solicitation for a construction price proposal (aka: at the time of advertising for bids).

The laboratory responsible for the test shall furnish at least one copy of the test results to the ~~Contracting Agency or his designated representative~~ Engineer, to the Contractor, and to the appropriate material supplier.

With respect to certain manufactured materials, the Engineer may permit the use of some materials prior to sampling and testing provided they are delivered with either a certificate of compliance or analysis or both, stating that the materials comply in all respects with the requirements of the specifications. These certificates shall be furnished in

2901 West Durango Street Phoenix, Arizona 85009 Phone: 602-506-4760 Fax: 602-506-5969

triplicate and clearly identify each delivery of materials to the work area. The certificates shall be signed by a person having legal authority to bind the supplier or manufacturer.

106.2.1 Certificate of Compliance: A Certificate of Compliance shall be submitted on the manufacturer's or supplier's official letterhead, and shall contain the following information:

1. The current name, address, and phone number of the manufacturer or supplier of the material or equipment.
2. A description of the material or equipment supplied.
3. Quantity of material represented by the certificate.
4. Means of material identification, such as label, lot number, or marking.
5. A statement that the material complies in all respects with the requirements of the cited specifications. Certificates shall state the name of the specific cited specifications, such as AASHTO M 320, ASTM C494, or specific table or subsection of the Specifications or Special Provisions.
6. A statement that the individual identified in item eight below has the legal authority to bind the manufacturer or the supplier of the material.
7. Project identification: Project name and all associated numbers (agency, Federal, and ADOT TRACS).
8. The name, title, and signature of the responsible individual. The date of the signature shall also be given.

Each of the first six items specified above shall be completed prior to the signing of the certificate as defined in item eight. No certificate will be accepted that has been altered, added to, or changed in any way after the authorized signature has been affixed to the original certificate. However, notations related to project specifics such as project identification, contractor, or quantity shipped are acceptable, provided the basic requirements of the certificate (items one through six) are not affected.

A copy or facsimile reproduction of the original certificate will be acceptable; however, the original certificate shall be made available upon request.

106.2.2 Certificate of Analysis: A Certificate of Analysis shall include all the information required for a Certificate of Compliance and, in addition, shall include the results of all tests required by the specifications.

SECTION 717 - ASPHALT-RUBBER ASPHALT CONCRETE

717.2.1.2 Crumb Rubber: Crumb Rubber shall meet the gradation requirements as shown in Table 717-1 below when tested in accordance with Arizona Test Method 714.

TABLE 717-1	
GRADATION REQUIREMENTS OF CRUMB RUBBER	
Sieve	Percent Passing
Size	Type B
2.36 mm (#8)	
2.00 mm (#10)	100
1.18 mm (#16)	65 - 100
600 µm (#30)	20 - 100
300 µm (#50)	0 - 45
75 µm (#200)	0 - 5

The crumb rubber shall have a specific gravity of 1.15 ± 0.05 and shall be free of wire or other contaminating materials, and shall contain not more than 0.5 percent fabric. Calcium carbonate, up to four percent by weight of the crumb rubber, may be added to prevent the particles from sticking together.

Crumb rubber shall be derived from processing whole scrap tires or shredded tire materials through a process of mechanical grinding at ambient temperature. Use of crumb rubber granules produced from a cryogenic process is prohibited. The tires from which the crumb rubber is produced shall be from automobiles, trucks, or other equipment owned and operated in the United States.

Upon request a Certificate~~s~~ of Compliance conforming to the requirements of Section 106.2 ~~conforming to Arizona State Department of Transportation Standard Specifications for Road and Bridge Construction Section 106.05~~ shall be submitted~~. In addition, the Certificates shall~~ that confirms ~~that~~ the ~~rubber is a~~ crumb rubber~~, derived from processing at ambient temperature, whole scrap tires or shredded tire materials; and the tires from which the crumb rubber is produced is taken from automobiles, trucks, or other equipment owned and operated in the United States.~~ complies with the gradation and specific gravity of this section 717 and is free of wire or other contaminating materials. The Certificate~~s~~ shall also attest~~verify:~~ ~~that~~

- The processing does not produce, as a waste product, casings or other round tire material that can hold water when stored or disposed of above the ground.
- The crumb rubber ~~to be used in ARB shall be the type~~ is produced through a process of mechanical grinding at ambient temperature.~~ Use of crumb rubber granules produced from a cryogenic process is prohibited.~~
- The tires from which the crumb rubber is produced were from automobiles, trucks, or other equipment owned and operated in the United States. ~~(Certificates of Compliance conforming to Arizona State Department of Transportation Standard Specifications for Road and Bridge Construction Section 106.05 shall be submitted.)~~

CHANGES to other sections that reference 'Certificates of Compliance':

Lime Stabilization or Modification of Subgrade Section 309.2.3 Lime Slurry: Lime slurry shall be a pumpable suspension of solids in water. The solids portion of the mixture, when considered on the basis of solids content, shall consist principally of hydrated lime of a quality and fineness sufficient to meet Section 309.2.2 requirements. Upon request a~~A~~ ~~c~~Certificate of ~~c~~Compliance shall be provided to the Engineer for each load of lime applied at the project.)

Decorative Asphalt Section 322.2 Materials, revise the second sentence as noted:

All products used in the surfacing system shall meet the minimum physical and performance properties in Table 322-1. The Contractor shall upon request submit a Certificate of Compliance to the Engineer indicating that the materials to be included in the work meet these specification requirements.

Microsurfacing Specifications Section 331.2 Materials:

The Contractor shall supply all materials necessary for the performance of the work in accordance with the specifications. The asphalt emulsion, aggregate, and mineral filler shall be as specified in Section 714. Materials shall be approved by the Engineer prior to the start of construction. When requested by the Engineer Certificates of Compliance shall be provided for ~~accompany~~ each delivery of emulsion.

The Contractor shall be responsible for the safety of all materials of which he has taken delivery until they are in place on the road, and shall take all necessary precautions to avoid loss by fire or theft, or damage by water, and shall bear the cost of replacing any such material that is lost, spilt, destroyed or damaged after delivery.

Concrete Structures Section 505.5.4.2 Anchoring Materials, revise the first paragraph as follows:

Epoxy materials shall be used for anchoring dowels. The Contractor shall upon request submit Certificates of Compliance or Analysis, complete with supporting documentation, to the Engineer for all epoxy materials to be used for anchoring dowels on a specific project, in accordance with the requirements of Section 106.2. The epoxy materials shall be provided by the Contractor in general conformance with the requirements of Section 1015-1~~–~~ General Requirements of Section 1015~~–~~ EPOXY MATERIALS of the current Arizona Department of Transportation (ADOT) Standard Specifications for Road and Bridge Construction, amended to date.

Section 505.6.3.3 Construction Requirements, paragraph (1) General, revise the last sentence as noted:

Upon request Certificates of Compliance conforming to the requirements of Section 106.2 shall also be submitted by the Contractor.

Section 711.3 Test Report and Certification:

Test reports and certifications shall be provided to the Engineer when requested by the Engineer. At the time of delivery of each shipment of asphalt, the supplier supplying the material shall deliver to the purchaser ~~3~~ a certified ~~copies~~ copy of the test report which shall indicate the name of the refinery and supplier, type and grade of asphalt delivered, date and point of delivery, quantity delivered, delivery ticket number, purchase order number, and results of the above specified tests. The test report shall be signed by an authorized representative of the supplier certifying that the product delivered conforms to the specifications for the type and grade indicated.

Until the certified test reports and samples of the material have been checked by the Engineer, that material will be only tentatively accepted by the Contracting Agency. Final acceptance will be dependent upon the determination of the Engineer that the material involved fulfills the requirements prescribed. The certified test reports and the testing required in connection with the reports shall be at no additional cost to the Contracting Agency.

Section 725.2 Cementitious Materials, revise the third paragraph as follows:

Cementitious materials shall be sampled and tested as prescribed in the applicable ASTM specifications. Upon request, t~~T~~he Contractor shall obtain and deliver to the Engineer a Certificate of Analysis or ~~certification~~ Certificate of C~~c~~ompliance conforming to the requirements of Section 106.2 signed by the material manufacturer, identifying the cementitious material and stating that the cementitious material delivered to the batching site has been tested in accordance with the cited specifications and complies with the cited ~~appropriate~~ specifications. ~~When requested by the Engineer, the Contractor shall furnish three copies of the cementitious materials certification.~~ The cost of furnishing tested cementitious materials shall be considered as included in the contract ~~bid~~ price and no additional allowance will be made therefore.

Section 725.2.1 Supplementary Cementitious Materials (Pozzolans), revise the third paragraph as follows:

Upon request ~~T~~the Contractor shall obtain and deliver to the Engineer a Certificate of Analysis or ~~c~~Certification of ~~c~~Compliance signed by the pozzolan supplier identifying

the pozzolanic material and stating the pozzolan delivered to the batching site complies with the appropriate specifications. The cost of furnishing tested pozzolan shall be considered as included in the contract ~~bid~~ price and no additional allowance will be made therefore.

Steel Reinforcement Section 727.1 General, revise the second paragraph as follows:

No reinforcing steel will be accepted under this specification until it has been approved by the Engineer. When required by the Engineer, the Contractor or supplier shall furnish a spot sample taken on the project and notify the Engineer as to when and where they will be available. Such samples shall be furnished at the expense of the Contractor or supplier, but the cost of any testing that may be required will be borne by the Contracting Agency. Samples shall only be taken in the presence of the Engineer. The Contractor shall furnish 3 certified mill test reports or a C~~c~~ertificate~~s~~ of C~~c~~ompliance for each heat or size of steel which can be clearly identified with the lot. When such information has been furnished, placing of the steel will not be held up until results of spot samples have been received. Unless otherwise specified, all reinforcing steel bars shall be deformed intermediate grade 40 billet steel conforming ~~with~~to ASTM A615 and the shapes shall conform with ASTM B670.

Expansion Joint Filler Section 729.3 Test Report and Shipment Certificate: When requested by the Engineer ~~E~~each shipment shall be accompanied by a ~~c~~Certificate of Compliance ~~from the supplier~~ that the material ~~will comply~~ complies with the above specifications ~~and such certificate shall be delivered to the Engineer~~.

Geosynthetics Section 796.3 Test and Certification Requirements:

Upon request a Certificate~~s~~ of ~~c~~Compliance shall be submitted to the ~~e~~Engineer ~~upon delivery of~~ for material ~~for~~ to be used ~~on a specified project~~. Samples of materials shall be submitted for testing. Each geosynthetic material lot or shipment ~~must~~ is to be approved by the Engineer before the material is ~~may be~~ incorporated into the work.

Testing methods and results shown in the ~~certificate~~ -Certificate of ~~c~~Compliance shall conform to the listed specifications for the proposed geosynthetic ~~use~~. Manufacturer's supporting documentation including, but not limited to, product information sheets, installation procedures and recommendations, recommended use, and project references shall be submitted to the Engineer for product evaluation and approval.

REFERENCE INFORMATION:

Arizona State Department of Transportation Standard Specifications for Road and Bridge Construction Section 106.05 (106CERT, 09/14/12 the Standard Specifications is revised to read:)

SECTION 106 CONTROL OF MATERIAL:

106.05 Certificates:

(A) General:

The contractor shall submit to the Engineer an original or copy of either a Certificate of Compliance or a Certificate of Analysis, as required, prior to the use of any materials or manufactured assemblies for which the specifications require that such a certificate be furnished.

Certificates shall be specifically identified as either a "Certificate of Compliance" or a "Certificate of Analysis".

The Engineer may permit the use of certain materials or manufactured assemblies prior to, or without, sampling and testing if accompanied by a Certificate of Compliance or Certificate of Analysis, as herein specified. Materials or manufactured assemblies for which a certificate is furnished may be sampled and tested at any time, and, if found not in conformity with the requirements of the plans and the specifications, will be subject to rejection, whether in place or not.

Certificates of Compliance and Certificates of Analysis shall comply with the requirements specified herein, the ADOT Materials Testing Manual, and applicable ADOT Materials Policy and Procedure Directives.

(B) Certificate of Compliance:

A Certificate of Compliance shall be submitted on the manufacturer's or supplier's official letterhead, and shall contain the following information:

(1) The current name, address, and phone number of the manufacturer or supplier of the material.

(2) A description of the material supplied.

(3) Quantity of material represented by the certificate.

(4) Means of material identification, such as label, lot number, or marking.

(5) A statement that the material complies in all respects with the requirements of the cited specifications. Certificates shall state compliance with the cited specification, such as AASHTO M 320, ASTM C 494; or specific table or subsection of the Arizona Department of Transportation Standard Specifications or Special Provisions. Certificates may cite both, if applicable.

(6) A statement that the individual identified in item seven below has the legal authority to bind the manufacturer or the supplier of the material.

(7) The name, title, and signature of the responsible individual. The date of the signature shall also be given.

Each of the first six items specified above shall be completed prior to the signing of the certificate as defined in item seven. No certificate will be accepted that has been altered, added to, or changed in any way after the authorized signature has been affixed to the original certificate. However, notations of a clarifying nature, such as project number, contractor, or quantity shipped are acceptable, provided the basic requirements of the certificate are not affected.

A copy or facsimile reproduction of the original certificate will be acceptable; however, the original certificate shall be made available upon request.

(C) Certificate of Analysis:

A Certificate of Analysis shall include all the information required for a Certificate of Compliance and, in addition, shall include the results of all tests required by the specifications.

Chandler • Arizona
Where Values Make The Difference

MEMORANDUM **Case # 16-05**

DATE: September 7, 2016

TO: MAG Specifications and Details Committee Members

FROM: Warren White, City of Chandler Representative

SUBJECT: Proposed New Dual Curb Ramp Details and Revisions to Section 340

Purpose: Incorporate new standard details for dual curb ramps (radial and directional) meeting latest ADA requirements and revisions to Section 340 for maximum grade allowances and measurement. The intention is for construction details to have the "build to" slopes/grades that will allow for tolerance while the specification provides the maximum limits for acceptance.

Revisions:

- Revised 20' radius details (236-3 and 237-3) allowing only 4" curb height thus keeping ramps within the PC/PT meeting Section 340 expansion joint requirements and much smaller footprint. Clarified 5' curb height transition from either 7" or 6" curb height to 4" when needed.
- Minor revisions to notes 3 and 5 on all details and removed note 5 on 20' radius details that allowed distance between ramps to be adjusted.
- Revised all directional ramp details (237) changing gutter elevations legend item to either flow line or finished grade design elevation see plans.
- Section 340.3.9 Tolerances – revised to keep the ½" concrete elevation allowance in 3rd paragraph.
- Section 340.5 Measurement – see red revisions under 340.5.3 Curb Ramp Installations. Mainly a clarification of the term "Ramp curb" located behind the walkway to be included as part of the ramp unit.

Case 16-05 DRAFT 8-15-16

340.3.9 Tolerances: The face, top, back, and flow line of the curb and gutter shall not deviate in excess of 1/4-inch over 10 feet, as tested with a 10-foot straightedge or curve template, longitudinally along the surface.

The surface of concrete sidewalk or curb ramp shall not deviate in excess of 1/8-inch over 5 feet as tested with a 5-foot straightedge except for the 1/4-inch recess of the preformed material in expansion joints.

All finished concrete elevations shall not deviate from the elevations shown on the plans, or indicated by typical sections or standard details referenced within the construction documents, by more than 1/2 inch.

When required by the Engineer, gutters shall be water tested. The Contractor shall establish flow in the length of gutter to be tested by supplying and distributing water from a hydrant, tank truck or other source. After the supply of water is shut off and water has stopped flowing, the gutter shall be inspected for evidence of ponding ~~or improper shape~~. The work shall be deemed deficient if water is found ponded in the gutter to a depth greater than 1/2 inch or ponding extends onto the adjacent asphalt pavement.

Areas between elevations shown on the plans shall be straight graded or smoothly transitioned through a vertical curve in a manner approved by the Engineer or as otherwise indicated on the construction documents.

Slopes of pedestrian facilities shall not exceed the maximum grades indicated in ADA guidelines: sidewalk cross slope of 2%, ramp slope of 8.33%, ramp and landing cross slope of 2% and flared side (wing) slope of 10%.

Section 340 Concrete Curb, Gutter, Sidewalk, Curb Ramps, Driveway and Alley Entrance

340.5 MEASUREMENT:

340.5.1 Concrete Curbs and Gutters: ~~of~~ The various types of curb and gutter shown on the plans and in the proposal will be measured along gutter flow line through inlets, catch basins, driveways, curb ramps, etc., by the lineal foot to the nearest foot for each type, complete in place. Measurement for curb terminations and transitions shall be included with the linear measurement of the various types of curb or curb and gutter as shown on the plans and in the proposal.

Curb and gutter type shall be based on the configuration of the final exposed surfaces. The increased curb and gutter depth required at valley gutter aprons or driveways shall not be measured as a separate pay item; any additional Contractor cost shall be included in the unit cost associated with the valley gutter, driveway or other associated item.

340.5.2 Concrete Flat Work: Sidewalks, driveways, alley intersections, valley gutters and aprons will be measured to the nearest square foot complete in place.

~~Detectable warnings shall not be measured for payment. Detectable warnings are considered integral to the walking surface that they form a part of and the cost is included in the related pay item.~~

340.5.3 Curb Ramp Installations: Curb ramp installations shall be measured as complete installed units. Curbing (single curb or curb and gutter) located at the edge of roadway shall be measured and paid for separately. The surface area of curb ramps shall not be included in the measured quantity for sidewalk. Detectable warnings are an integral part of curb ramp installations and shall not be measured ~~for payment. Detectable warnings are considered integral~~. Ramp curbs located behind the walkway are an integral part of parallel curb ramp and combination curb ramp installations and shall not be measured. ~~to the walking surface that they form a part of and the cost is included in the related pay item.~~

~~and shall include the ramp curb and the walking surfaces between the ramp curb and back of curb and gutter or single curb. Single curb or curb and gutter located at the edge of roadway shall be measured and paid for separately. The surface area of curb ramps shall not be included in the measured quantity for sidewalk.~~ Curb ramps located within a curb return shall include the entire curb return area excluding the edge of roadway curbing. Curb ramp installations shall be categorized and measured by curb return radius, the number (one or two) of curb ramps ~~(one or two)~~ contained within the return, and the type of curb ramps (perpendicular, parallel, or combination).

Each curb ramp not located within a curb return shall be categorized by type and measured as a complete unit. Perpendicular curb ramps shall include the area from the back of curb between the outer edges of the ramp wings to the top of the curb ramp, ending prior to and excluding the top landing. The landing area at the top of the perpendicular curb ramp is to be included in the measured sidewalk area. Parallel and combination curb ramps shall include the ramp curb and all surfaces between the ramp curb and the back edge of the roadway curbing.

340.6 PAYMENT:

Payment will be made in accordance with the unit prices ~~or lump sums~~ as set forth in the proposal. Such payment shall include full compensation for furnishing all labor, material, tools and equipment and accomplishing all work in conformance with the contract documents.

Over-excavation of soft, expansive or unsuitable materials and installation of granular materials will be paid separately and ~~as a separate pay item,~~ not included within the above measured pay items.

Section 340 Concrete Curb, Gutter, Sidewalk, Curb Ramps, Driveway and Alley Entrance

340.5 MEASUREMENT:

340.5.1 Concrete Curbs and Gutters: The various types of curb and gutter shown on the plans and in the proposal will be measured along gutter flow line through inlets, catch basins, driveways, curb ramps, etc., by the lineal foot to the nearest foot for each type, complete in place. Measurement for curb terminations and transitions shall be included with the linear measurement of the various types of curb or curb and gutter as shown on the plans and in the proposal.

Curb and gutter type shall be based on the configuration of the final exposed surfaces. The increased curb and gutter depth required at valley gutter aprons or driveways shall not be measured as a separate pay item; any additional Contractor cost shall be included in the unit cost associated with the valley gutter, driveway or other associated item.

340.5.2 Concrete Flat Work: Sidewalks, driveways, alley intersections, valley gutters and aprons will be measured to the nearest square foot complete in place.

340.5.3 Curb Ramp Installations: Curb ramp installations shall be measured as complete installed units. Curbing (single curb or curb and gutter) located at the edge of roadway shall be measured and paid for separately. The surface area of curb ramps shall not be included in the measured quantity for sidewalk. Detectable warnings are an integral part of curb ramp installations and shall not be measured. Ramp curbs located behind the walkway are an integral part of parallel curb ramp and combination curb ramp installations and shall not be measured.

Curb ramps located within a curb return shall include the entire curb return area excluding the edge of roadway curbing. Curb ramp installations shall be categorized and measured by curb return radius, the number (one or two) of curb ramps contained within the return, and the type of curb ramps (perpendicular, parallel, or combination).

Each curb ramp not located within a curb return shall be categorized by type and measured as a complete unit. Perpendicular curb ramps shall include the area from the back of curb between the outer edges of the ramp wings to the top of the curb ramp, ending prior to and excluding the top landing. The landing area at the top of the perpendicular curb ramp is to be included in the measured sidewalk area. Parallel and combination curb ramps shall include the ramp curb and all surfaces between the ramp curb and the back edge of the roadway curbing.

340.6 PAYMENT:

Payment will be made in accordance with the unit prices as set forth in the proposal. Such payment shall include full compensation for furnishing all labor, material, tools and equipment and accomplishing all work in conformance with the contract documents.

Over-excavation of soft, expansive or unsuitable materials and installation of granular materials will be paid separately and not included within the above measured pay items.

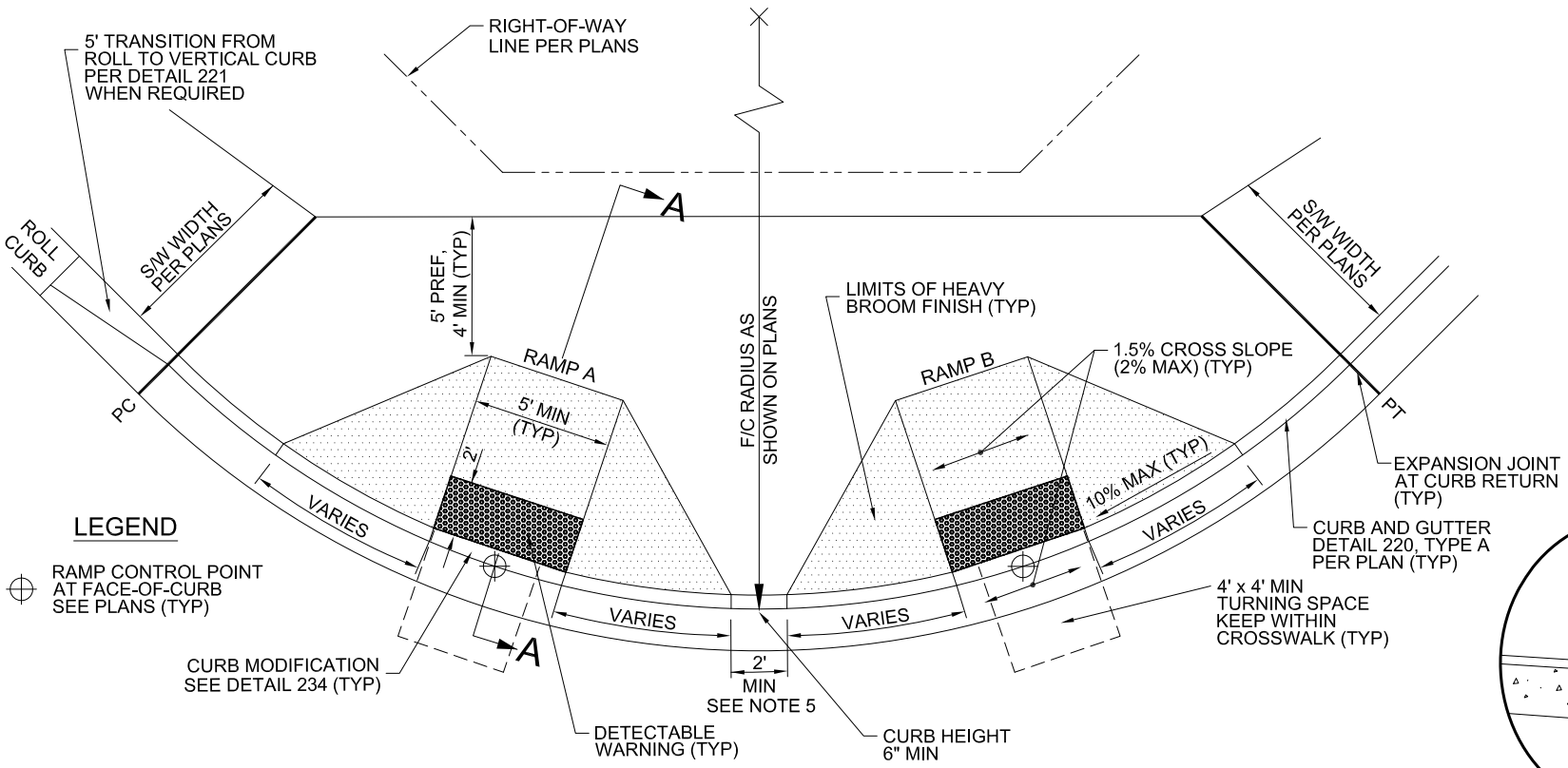

LEGEND

⊕ RAMP CONTROL POINT AT FACE-OF-CURB SEE PLANS (TYP)

NOTES:

1. CLASS 'A' CONCRETE PER SECTION 725, PC TO PT.
2. CONSTRUCTION INCLUDING EXPANSION JOINTS AND MAXIMUM SLOPES SHALL CONFORM TO SECTION 340.
3. WALKWAY SURFACE TO MATCH 1.5% SLOPE FROM TOP OF CURB.
4. DETECTABLE WARNING IS TO COMPLY WITH THE JURISDICTIONAL AGENCY'S REQUIREMENTS.
5. DISTANCE BETWEEN RAMPS MAY BE ADJUSTED TO IMPROVE ALIGNMENT WITH RECEIVING RAMP WHEN ALLOWED BY THE JURISDICTIONAL AGENCY.
6. SPECIAL DESIGN IS REQUIRED FOR GUTTER GRADES GREATER THAN 2%.

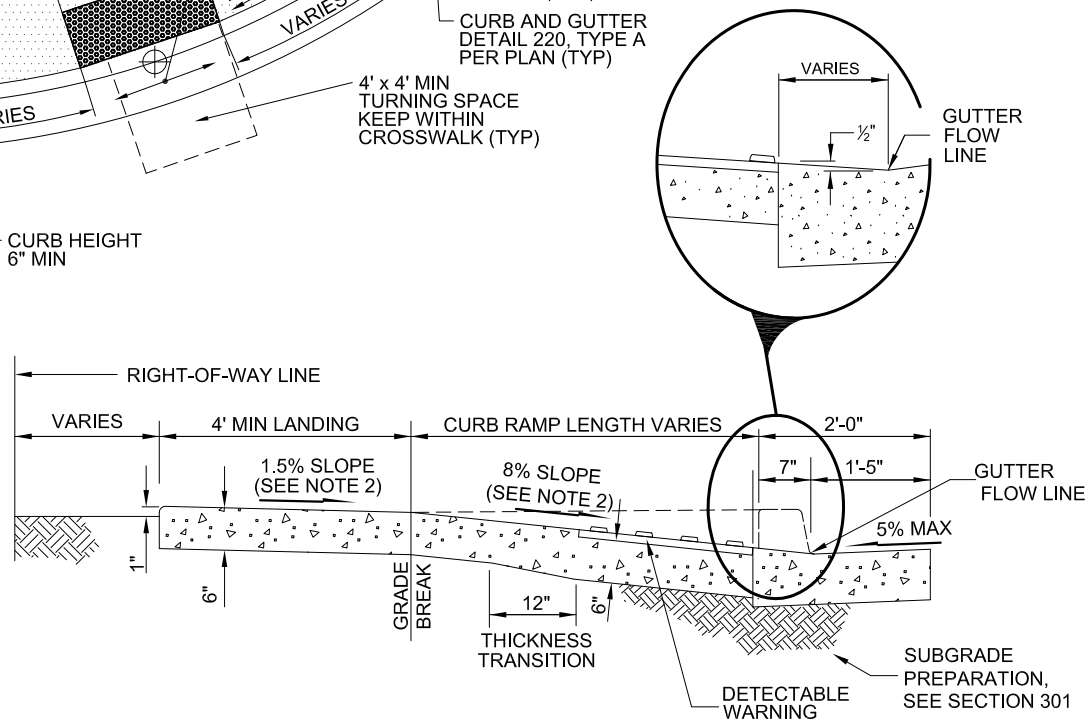

SECTION A-A

DETAIL NO.		STANDARD DETAIL		PROPOSED	DETAIL NO.
236-1	MARICOPA ASSOCIATION of GOVERNMENTS	ENGLISH	DUAL CURB RAMP (RADIAL, 25' - 35' R) ATTACHED SIDEWALK	01–01–2017	236-1

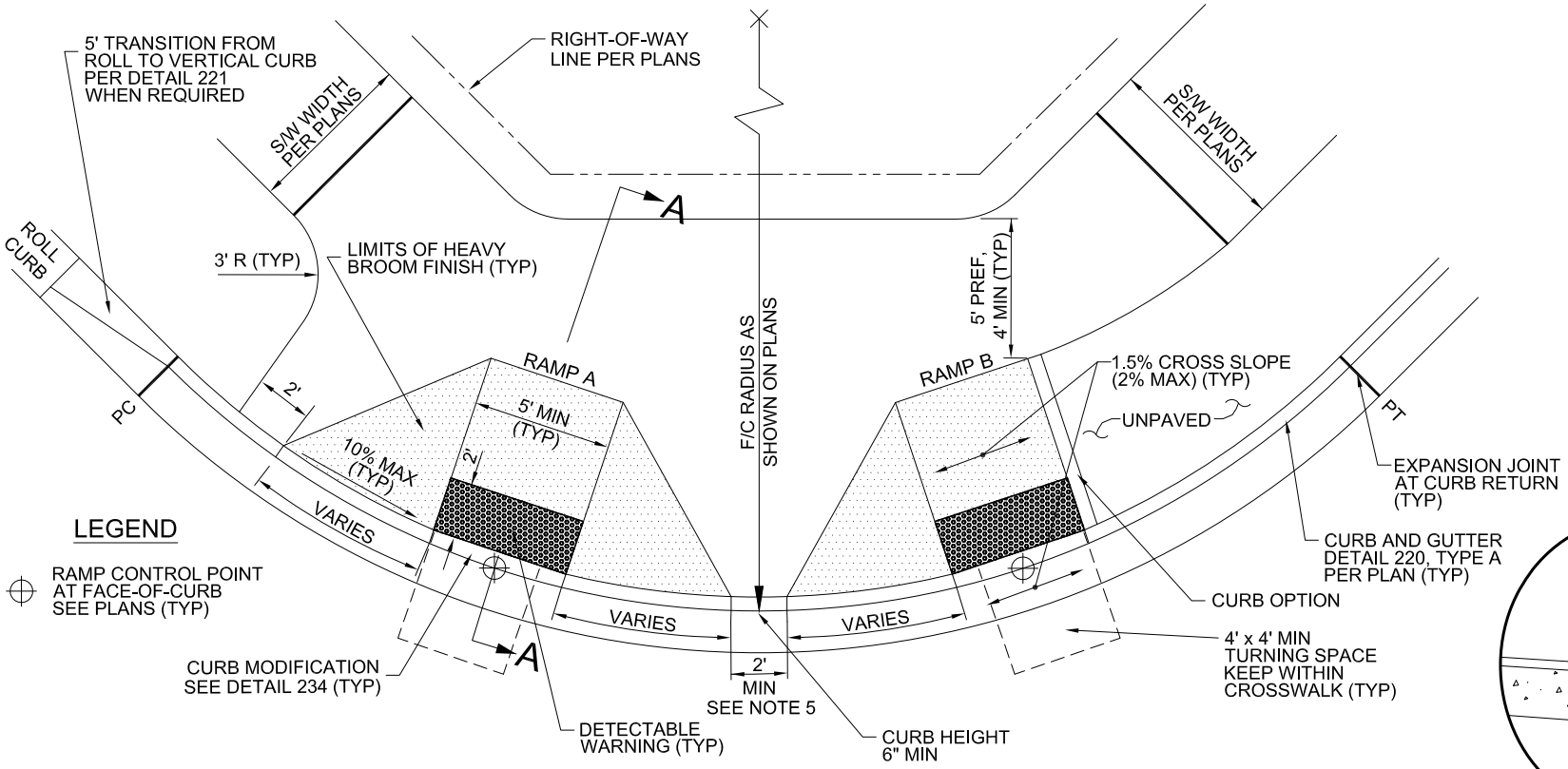

LEGEND

⊕ RAMP CONTROL POINT AT FACE-OF-CURB SEE PLANS (TYP)

NOTES:

1. CLASS 'A' CONCRETE PER SECTION 725, PC TO PT.
2. CONSTRUCTION INCLUDING EXPANSION JOINTS AND MAXIMUM SLOPES SHALL CONFORM TO SECTION 340.
3. WALKWAY SURFACE TO MATCH 1.5% SLOPE FROM TOP OF CURB.
4. DETECTABLE WARNING IS TO COMPLY WITH THE JURISDICTIONAL AGENCY'S REQUIREMENTS.
5. DISTANCE BETWEEN RAMPS MAY BE ADJUSTED TO IMPROVE ALIGNMENT WITH RECEIVING RAMP WHEN ALLOWED BY THE JURISDICTIONAL AGENCY.
6. SPECIAL DESIGN IS REQUIRED FOR GUTTER GRADES GREATER THAN 2%.

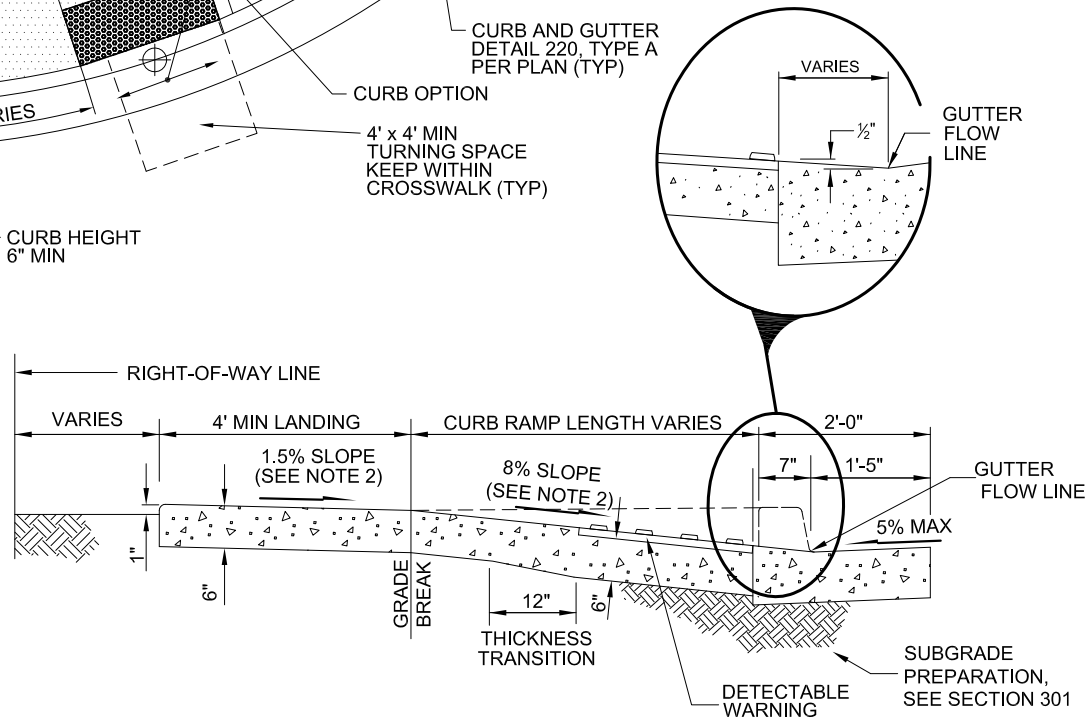

SECTION A-A

DETAIL NO.		STANDARD DETAIL		PROPOSED	DETAIL NO.
236-2	MARICOPA ASSOCIATION of GOVERNMENTS	ENGLISH	DUAL CURB RAMP (RADIAL, 25' - 35' R) DETACHED SIDEWALK	01–01–2017	236-2

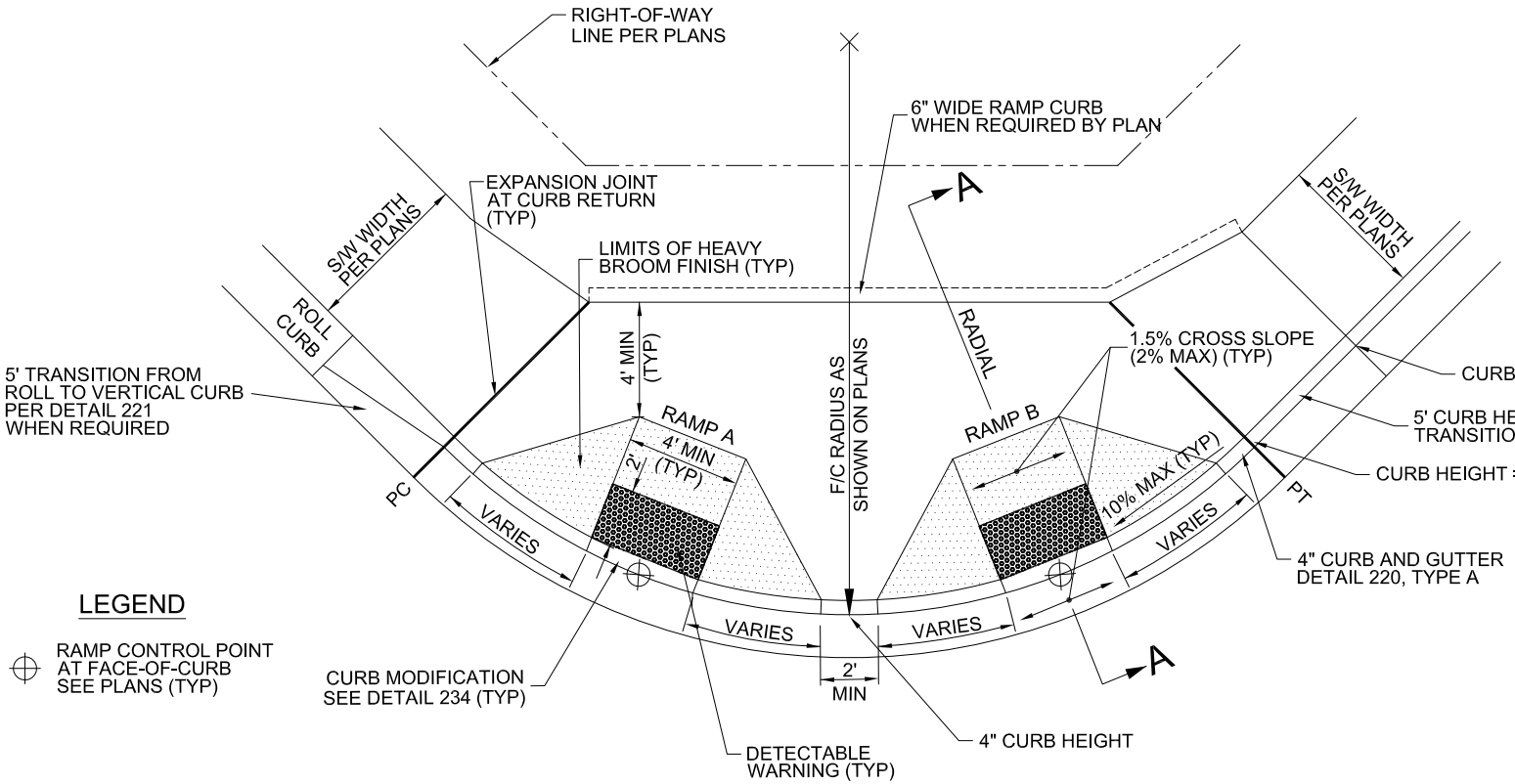

LEGEND

⊕ RAMP CONTROL POINT AT FACE-OF-CURB SEE PLANS (TYP)

NOTES:

1. CLASS 'A' CONCRETE PER SECTION 725, PC TO PT.
2. CONSTRUCTION INCLUDING EXPANSION JOINTS AND MAXIMUM SLOPES SHALL CONFORM TO SECTION 340.
3. WALKWAY SURFACE TO MATCH 1.5% SLOPE FROM TOP OF CURB.
4. DETECTABLE WARNING IS TO COMPLY WITH THE JURISDICTIONAL AGENCY'S REQUIREMENTS.
5. SPECIAL DESIGN IS REQUIRED FOR GUTTER GRADES GREATER THAN 2%.

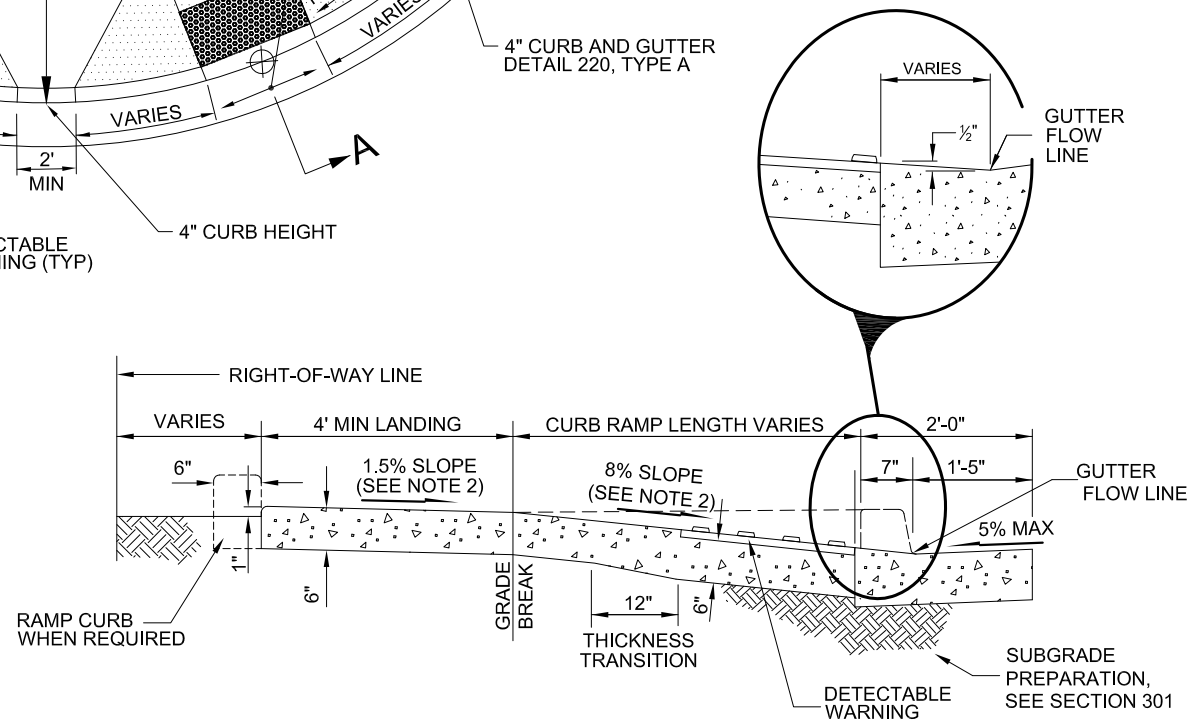

SECTION A-A

DETAIL NO.		STANDARD DETAIL		PROPOSED	DETAIL NO.
236-3	MARICOPA ASSOCIATION of GOVERNMENTS	ENGLISH	DUAL CURB RAMP (RADIAL, 20' R) ATTACHED SIDEWALK	01–01–2017	236-3

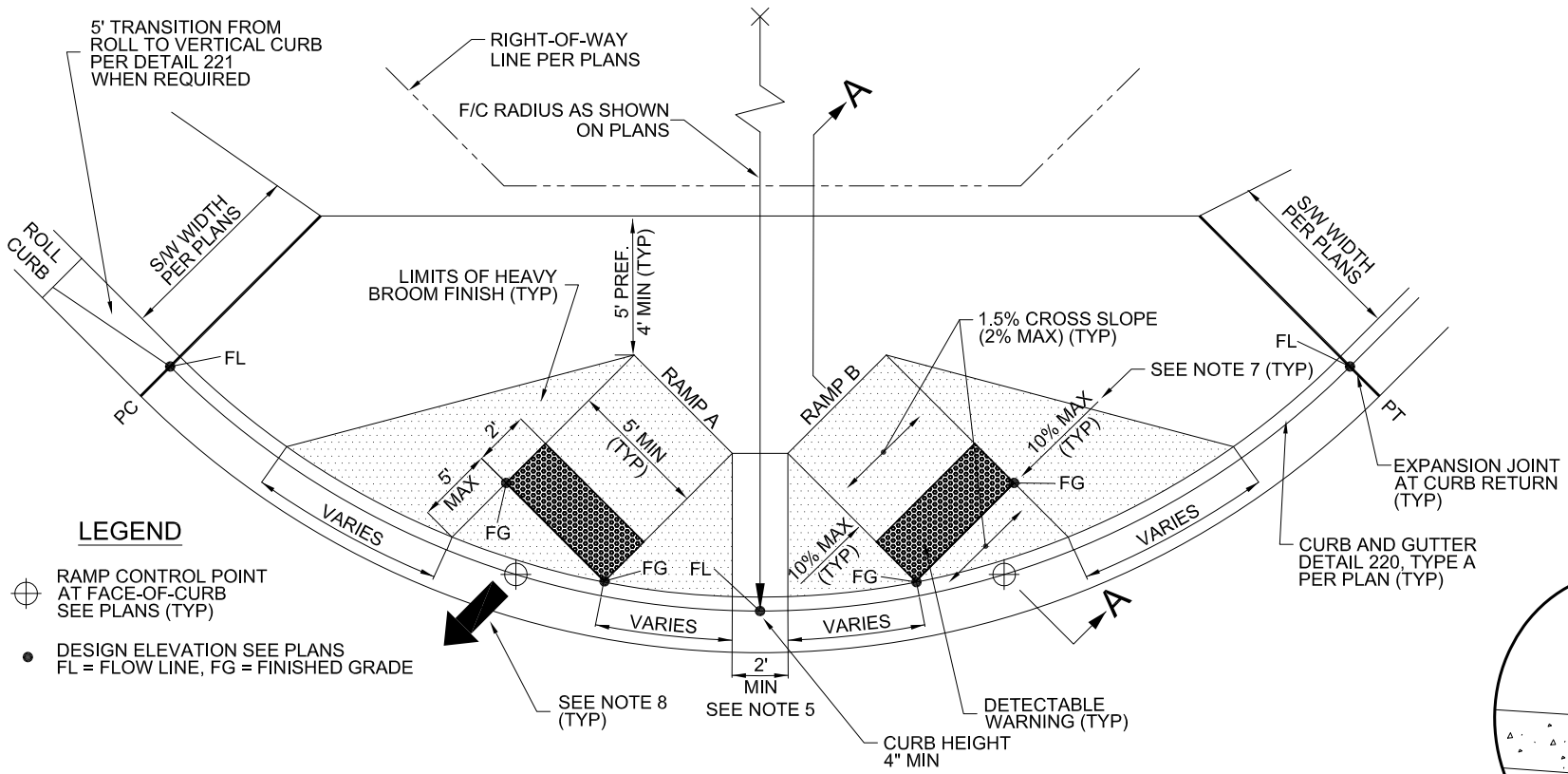

LEGEND

- ⊕ RAMP CONTROL POINT AT FACE-OF-CURB SEE PLANS (TYP)
- ● DESIGN ELEVATION SEE PLANS FL = FLOW LINE, FG = FINISHED GRADE

NOTES:

1. CLASS 'A' CONCRETE PER SECTION 725, PC TO PT.
2. CONSTRUCTION INCLUDING EXPANSION JOINTS AND MAXIMUM SLOPES SHALL CONFORM TO SECTION 340.
3. WALKWAY SURFACE TO MATCH 1.5% SLOPE FROM TOP OF CURB.
4. DETECTABLE WARNING IS TO COMPLY WITH THE JURISDICTIONAL AGENCY'S REQUIREMENTS.
5. DISTANCE BETWEEN RAMPS MAY BE ADJUSTED TO IMPROVE ALIGNMENT WITH RECEIVING RAMP WHEN ALLOWED BY THE JURISDICTIONAL AGENCY.
6. SPECIAL DESIGN IS REQUIRED FOR GUTTER GRADES GREATER THAN 2%.
7. WING SLOPE SHALL NOT EXCEED 10% MEASURED PERPENDICULAR TO RAMP.
8. RAMP ALIGNMENT SHOULD CONNECT CONTROL POINT TO CONTROL POINT OF RECEIVING RAMP WITHIN 5 FEET.

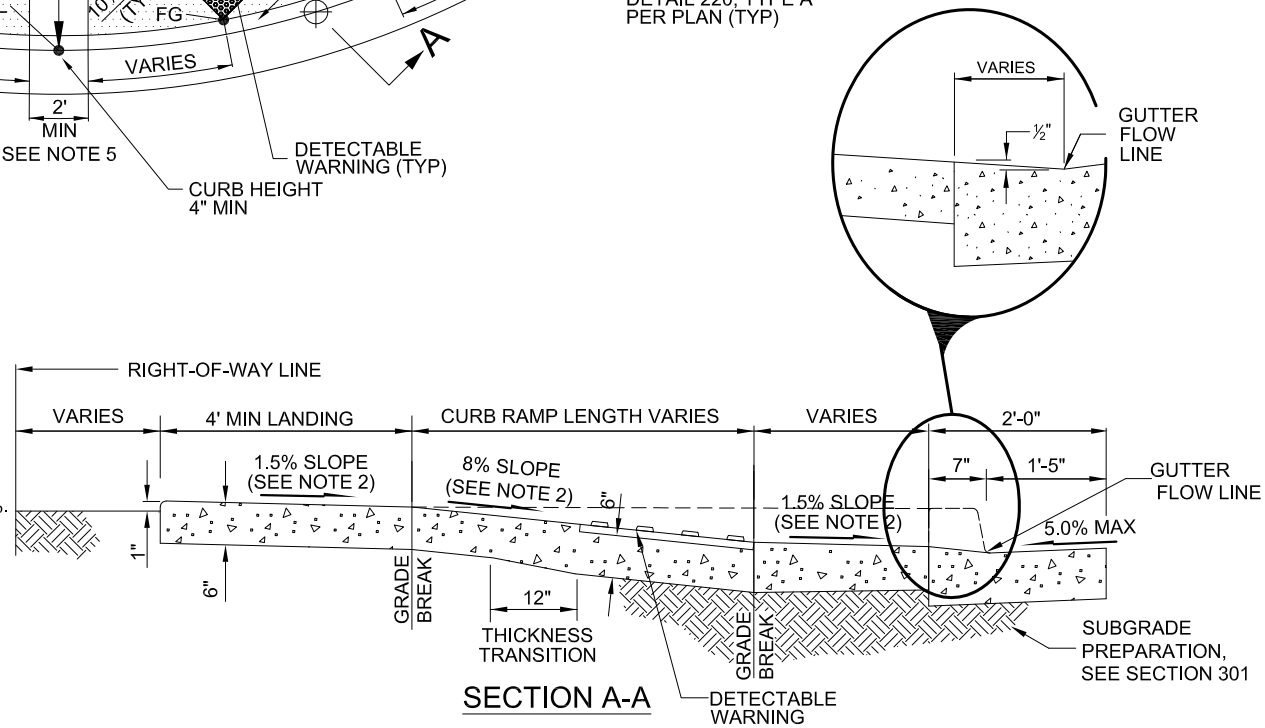

SECTION A-A

DETAIL NO.		STANDARD DETAIL		PROPOSED	DETAIL NO.
237-1	MARICOPA ASSOCIATION of GOVERNMENTS	ENGLISH	DUAL CURB RAMP (DIRECTIONAL, 25' - 35'R) ATTACHED SIDEWALK	01–01–2017	237-1

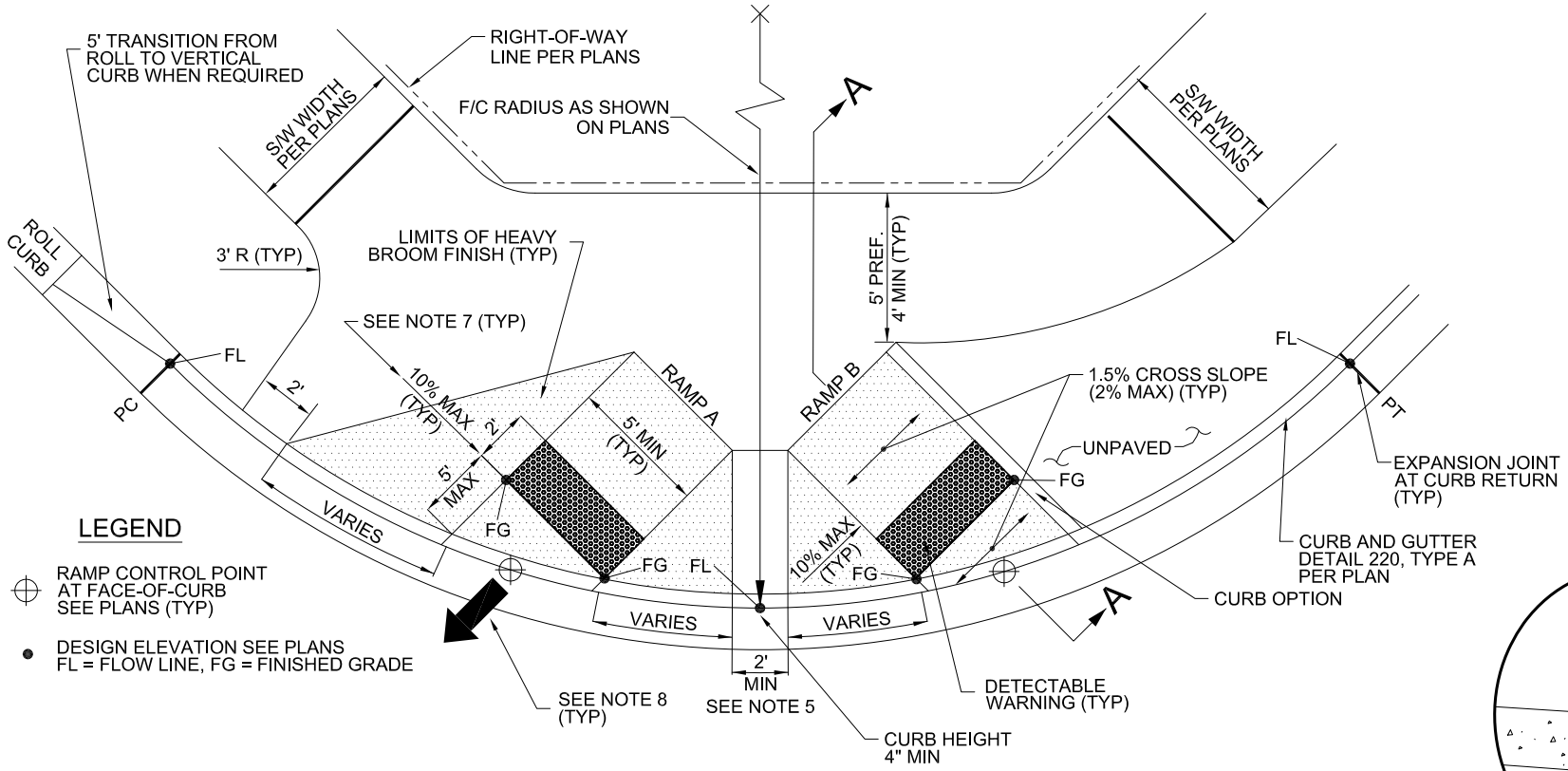

LEGEND

- ⊕ RAMP CONTROL POINT AT FACE-OF-CURB SEE PLANS (TYP)
- ● DESIGN ELEVATION SEE PLANS FL = FLOW LINE, FG = FINISHED GRADE

NOTES:

1. CLASS 'A' CONCRETE PER SECTION 725, PC TO PT.
2. CONSTRUCTION INCLUDING EXPANSION JOINTS AND MAXIMUM SLOPES SHALL CONFORM TO SECTION 340.
3. WALKWAY SURFACE TO MATCH 1.5% SLOPE FROM TOP OF CURB.
4. DETECTABLE WARNING IS TO COMPLY WITH THE JURISDICTIONAL AGENCY'S REQUIREMENTS.
5. DISTANCE BETWEEN RAMPS MAY BE ADJUSTED TO IMPROVE ALIGNMENT WITH RECEIVING RAMP WHEN ALLOWED BY THE JURISDICTIONAL AGENCY.
6. SPECIAL DESIGN IS REQUIRED FOR GUTTER GRADES GREATER THAN 2%.
7. WING SLOPE SHALL NOT EXCEED 10% MEASURED PERPENDICULAR TO RAMP.
8. RAMP ALIGNMENT SHOULD CONNECT CONTROL POINT TO CONTROL POINT OF RECEIVING RAMP WITHIN 5 FEET.

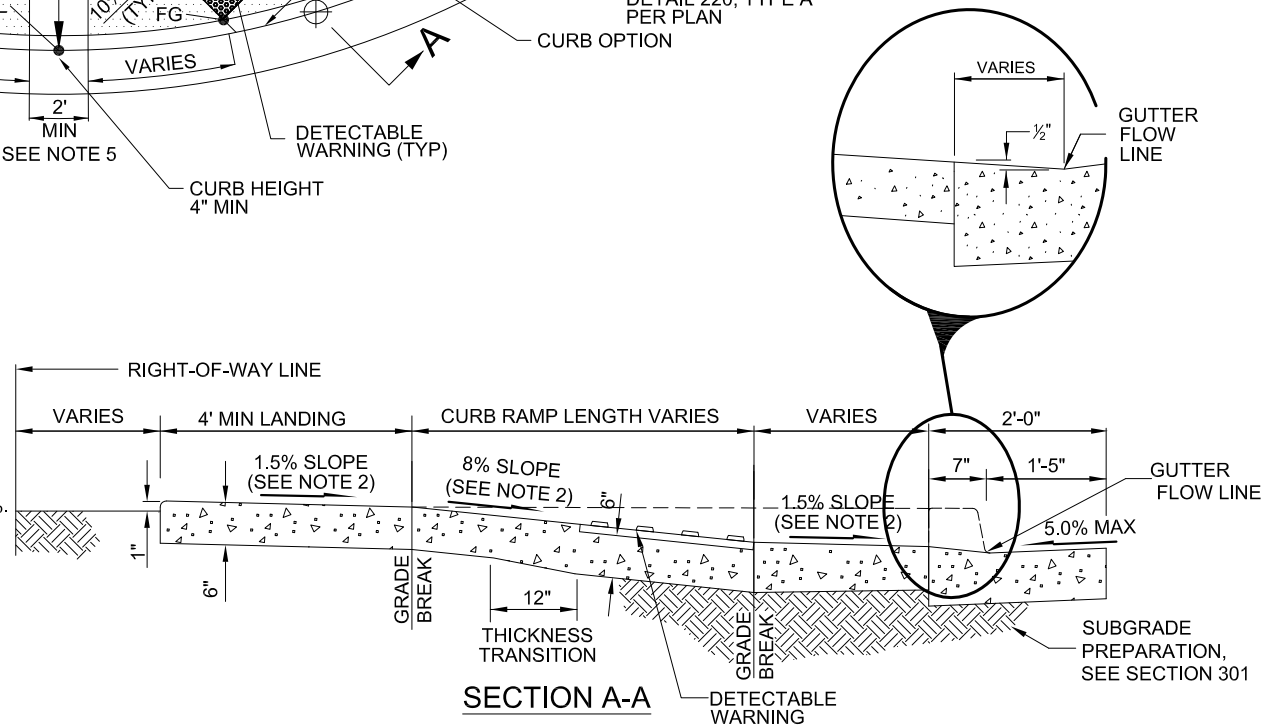

SECTION A-A

DETAIL NO.		STANDARD DETAIL		PROPOSED	DETAIL NO.
237-2	MARICOPA ASSOCIATION of GOVERNMENTS	ENGLISH	DUAL CURB RAMP (DIRECTIONAL, 25' - 35'R) DETACHED SIDEWALK	01–01–2017	237-2

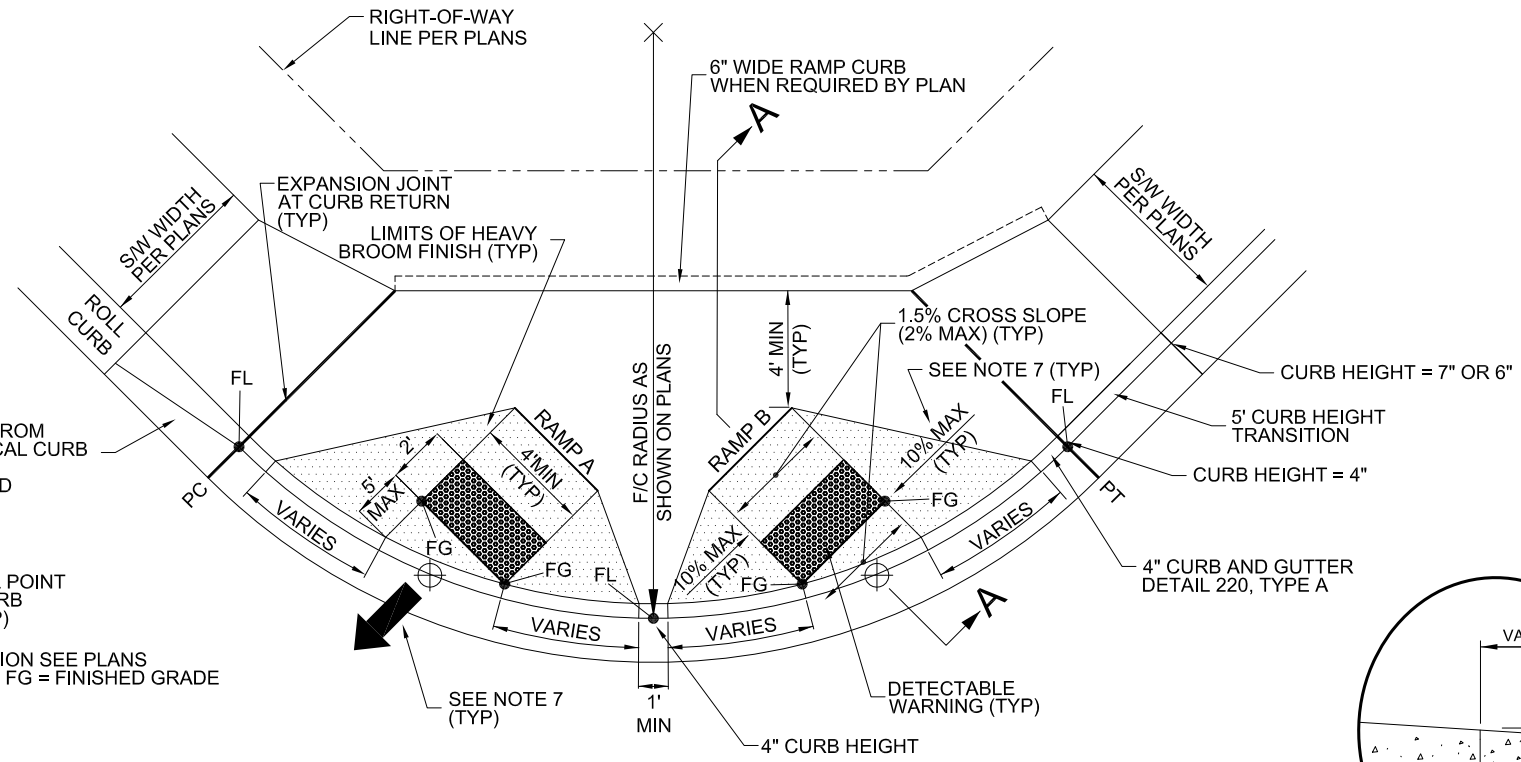

LEGEND

⊕ RAMP CONTROL POINT AT FACE-OF-CURB SEE PLANS (TYP)

● DESIGN ELEVATION SEE PLANS FL = FLOW LINE, FG = FINISHED GRADE

NOTES:

1. CLASS 'A' CONCRETE PER SECTION 725, PC TO PT.
2. CONSTRUCTION INCLUDING EXPANSION JOINTS AND MAXIMUM SLOPES SHALL CONFORM TO SECTION 340.
3. WALKWAY SURFACE TO MATCH 1.5% SLOPE FROM TOP OF CURB.
4. DETECTABLE WARNING IS TO COMPLY WITH THE JURISDICTIONAL AGENCY'S REQUIREMENTS.
5. SPECIAL DESIGN IS REQUIRED FOR GUTTER GRADES GREATER THAN 2%.
6. WING SLOPE SHALL NOT EXCEED 10% MEASURED PERPENDICULAR TO RAMP.
7. RAMP ALIGNMENT SHOULD CONNECT CONTROL POINT TO CONTROL POINT OF RECEIVING RAMP WITHIN 5 FEET.

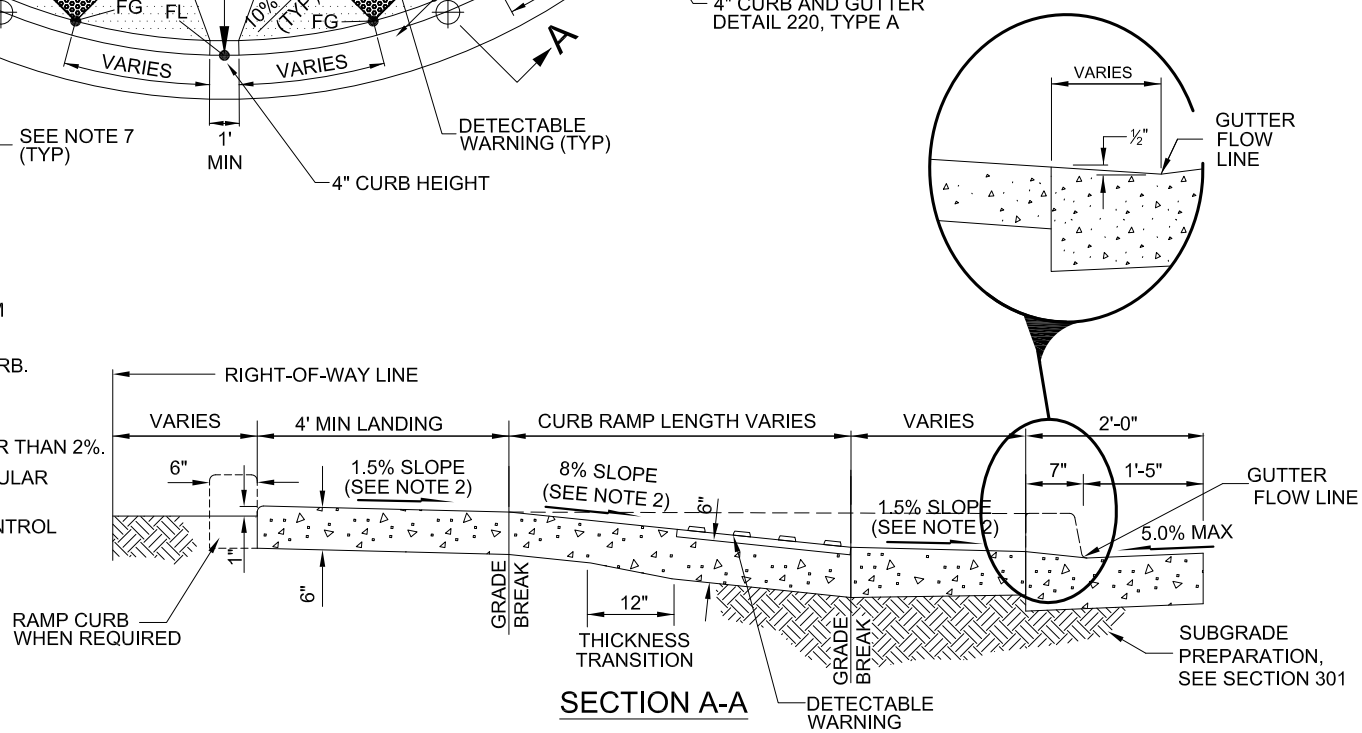

SECTION A-A

DETAIL NO.		STANDARD DETAIL		PROPOSED	DETAIL NO.
237-3	MARICOPA ASSOCIATION of GOVERNMENTS	ENGLISH	DUAL CURB RAMP (DIRECTIONAL, 20' R) ATTACHED SIDEWALK	01–01–2017	237-3

CASE 16-08
REVISED 08-15-16

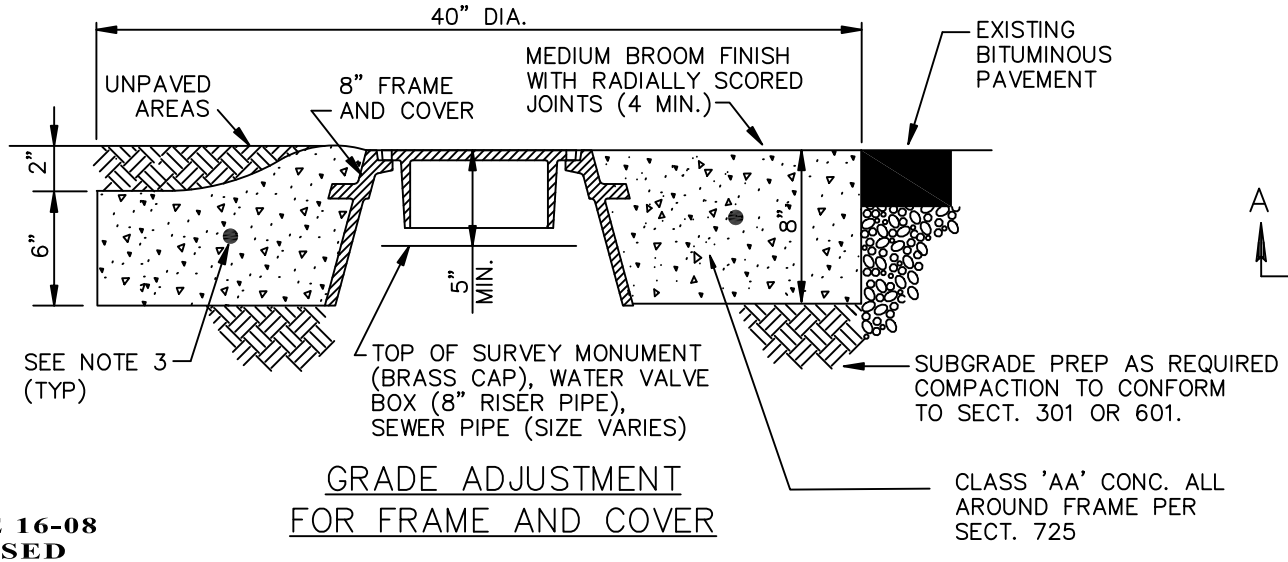

GRADE ADJUSTMENT
FOR FRAME AND COVER

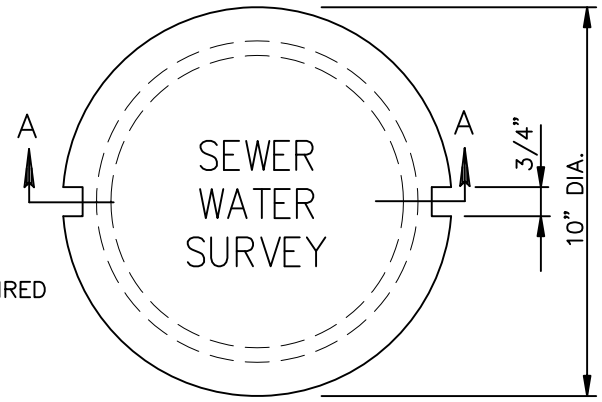

CASE 16-08
REVISED
07-19-16

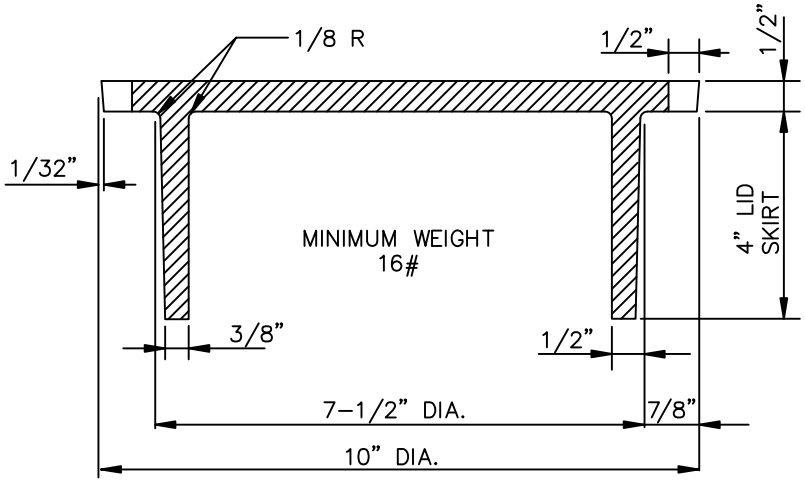

COVER SECTION A-A

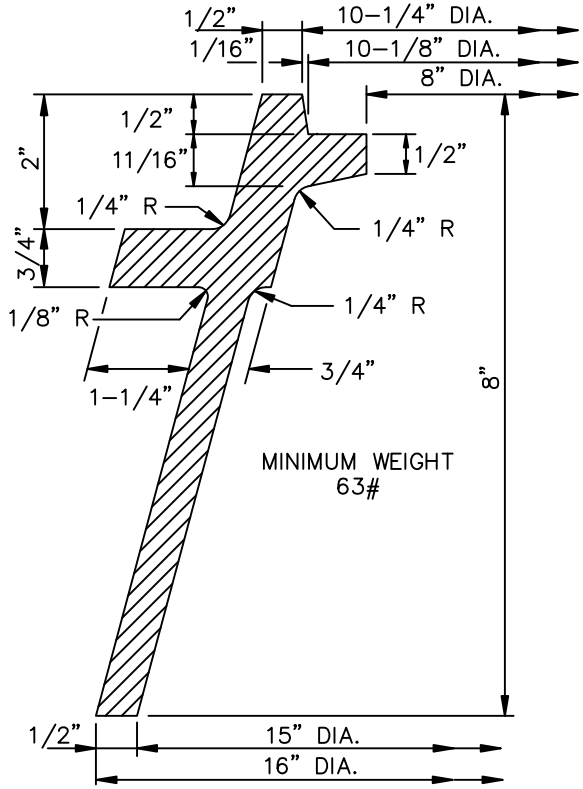

8" C.I. FRAME AND COVER

NOTES:

1. CASTING TO CONFORM TO SECT. 787.
2. LETTERS ON COVER TO BE AS FOLLOWS: "SEWER", "WATER", OR "SURVEY" AS DIRECTED. TOTAL WIDTH OF WORD "SEWER" OR "WATER" 3-3/4", TOTAL WIDTH OF THE WORD "SURVEY" 4-1/2". LETTER SIZE 5/8" X 3/4" , RAISED 1/16" ABOVE THE LEVEL OF THE COVER.
3. #4 REINFORCING STEEL HOOP EQUALLY CENTERED HORIZONTALLY & VERTICALLY.

DETAIL NO.				REVISED	DETAIL NO.
270	MARICOPA ASSOCIATION of GOVERNMENTS	STANDARD DETAIL ENGLISH	FRAME AND COVER AND GRADE ADJUSTMENT	01-01-2017	270

CASE 16-08
REVISED
08-17-16

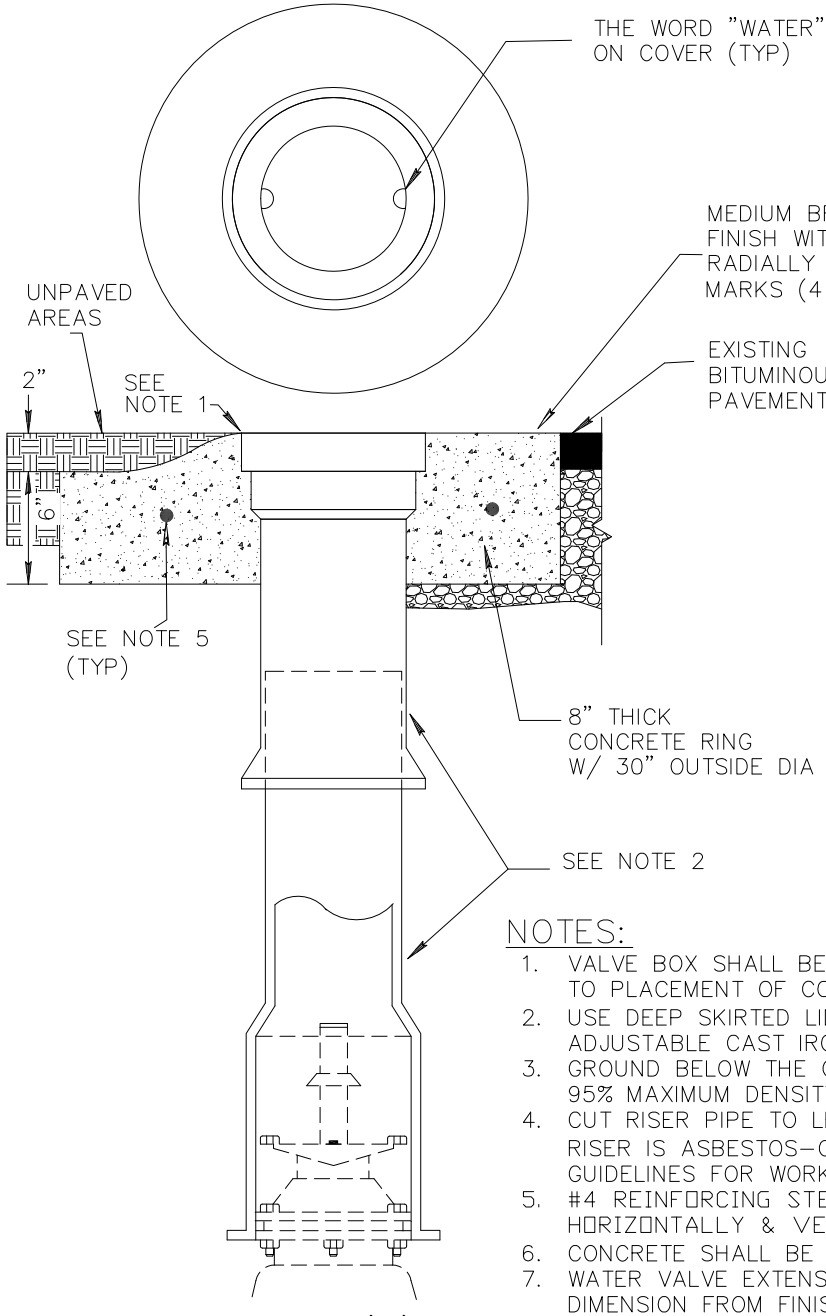

TYPE 'C'

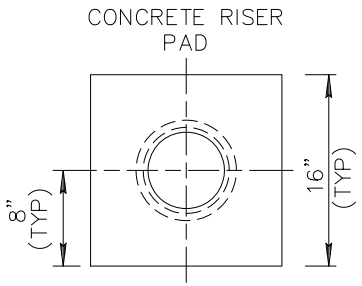

VIEW A–A

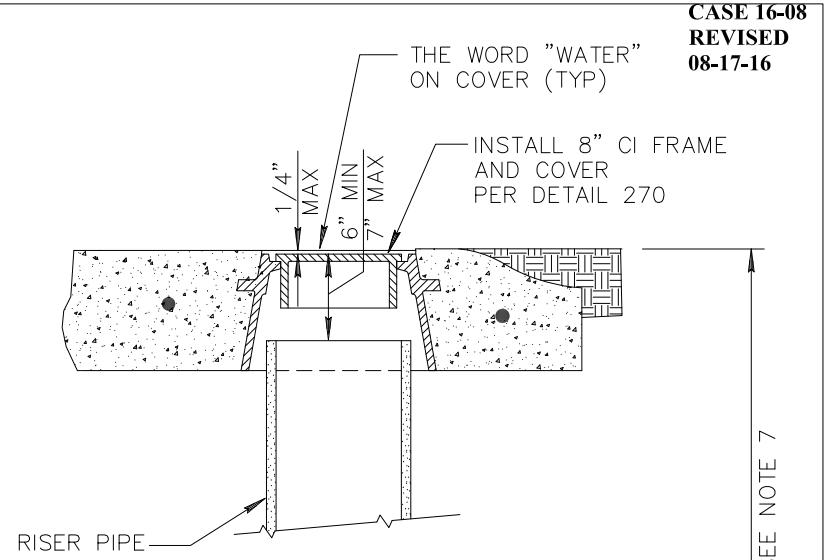

TYPE 'A'

(TO BE USED IN AREAS SUBJECT TO VEHICULAR TRAFFIC)

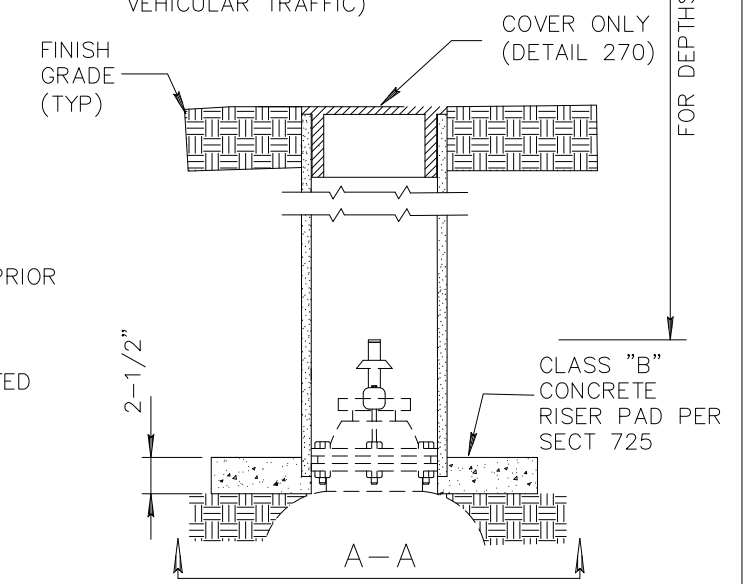

TYPE 'B'

(NOT SUBJECT TO VEHICULAR TRAFFIC)

NOTES:

1. VALVE BOX SHALL BE ADJUSTED TO THE FINISHED GRADE PRIOR TO PLACEMENT OF CONCRETE.
2. USE DEEP SKIRTED LID (4" OR MORE) TYPE, SLIDING ADJUSTABLE CAST IRON VALVE BOX C.I. MIN 30,000 P.S.I.
3. GROUND BELOW THE CONCRETE RISER PAD TO BE COMPACTED 95% MAXIMUM DENSITY.
4. CUT RISER PIPE TO LENGTH IN FIELD. **CAUTION:** IF EXISTING RISER IS ASBESTOS–CEMENT PIPE (ACP) FOLLOW OSHA GUIDELINES FOR WORKING WITH ACP.
5. #4 REINFORCING STEEL HOOP EQUALLY CENTERED HORIZONTALLY & VERTICALLY.
6. CONCRETE SHALL BE CLASS "AA" PER SECTION 725.
7. WATER VALVE EXTENSIONS SHALL BE INSTALLED WHEN THE DIMENSION FROM FINISH GRADE TO THE TOP OF THE OPERATING NUT EXCEEDS 5 FEET. SEE DETAIL 393 FOR VALVE EXTENSION.

DETAIL NO.					
391–1	MARICOPA ASSOCIATION of GOVERNMENTS	STANDARD DETAIL ENGLISH	VALVE BOX INSTALLATION AND GRADE ADJUSTMENT	REVISED DRAFT 01–01–2017	DETAIL NO. 391–1

CASE 16-08
REVISED 08-17-16

NOTES:

1. IF TWO OR MORE SECTIONS OF PIPE ARE USED TO MAKE THE VALVE BOX RISER, THEY SHALL BE COUPLED OR BONDED TO FORM DEBRIS–TIGHT JOINTS.
2. VALVE BOX SHALL BE PLUMB AND CENTERED AROUND THE OPERATING NUT.
3. THE TOP OF THE VALVE SHALL BE KEPT CLEAN.
4. THE TOP OF THE RISER SHALL BE A MINIMUM OF 1 INCH ABOVE UNDISTURBED OR COMPACTED SOIL AND SHALL HAVE A MINIMUM CLEARANCE OF 2" FROM THE RISER TO THE LID SKIRT.

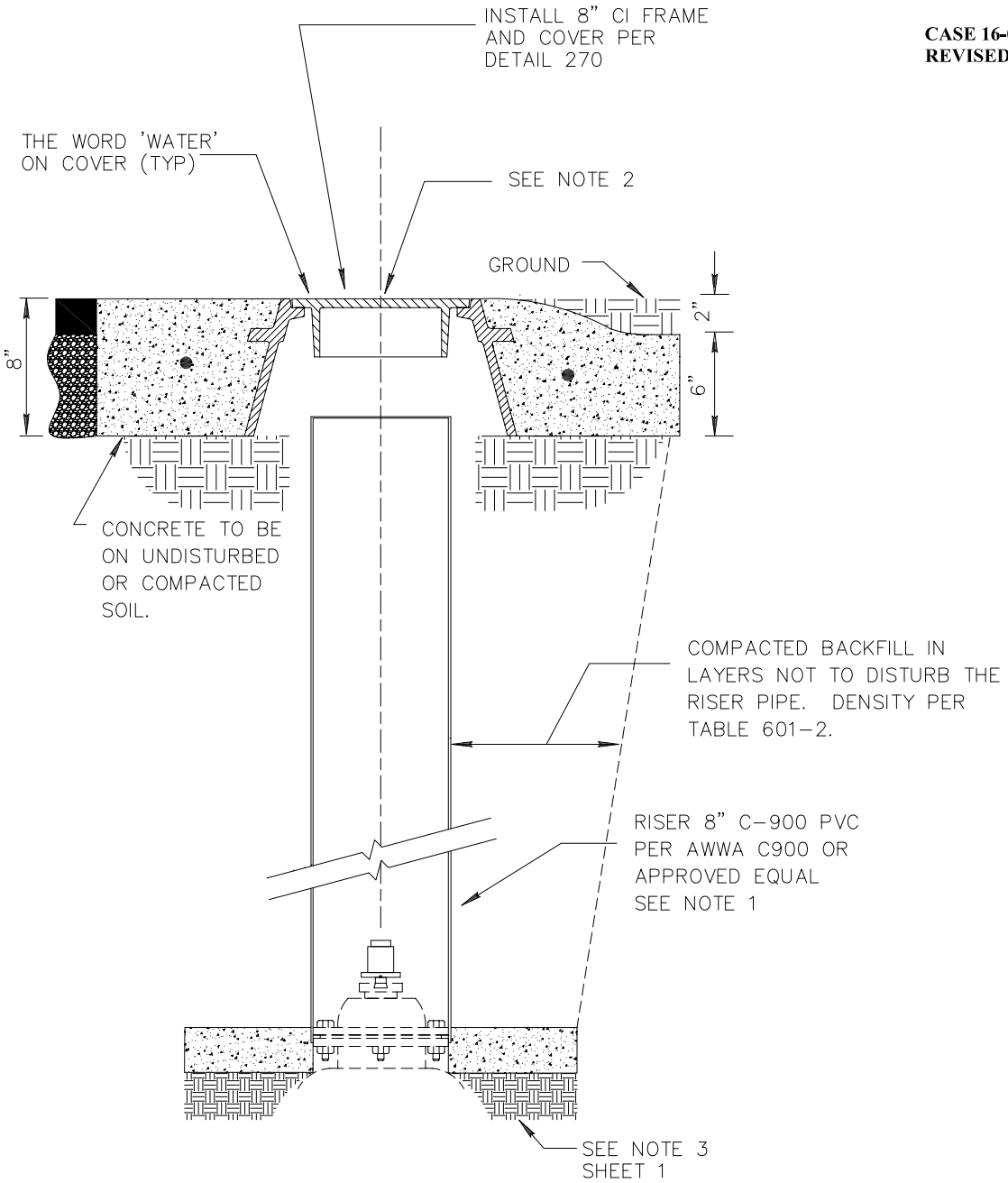

DRAFT		STANDARD DETAIL		REVISED DRAFT	DETAIL NO.
391–2	MARICOPA ASSOCIATION of GOVERNMENTS	ENGLISH	VALVE BOX INSTALLATION AND GRADE ADJUSTMENT	01–01–2017	391–2

CASE 16-08
REVISED 08-17-16

PIPE SLEEVE DETAIL

MATL: STEEL PER ASTM A513

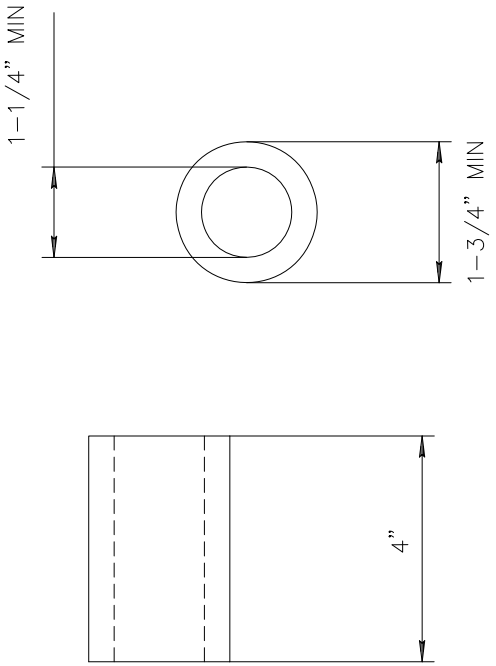

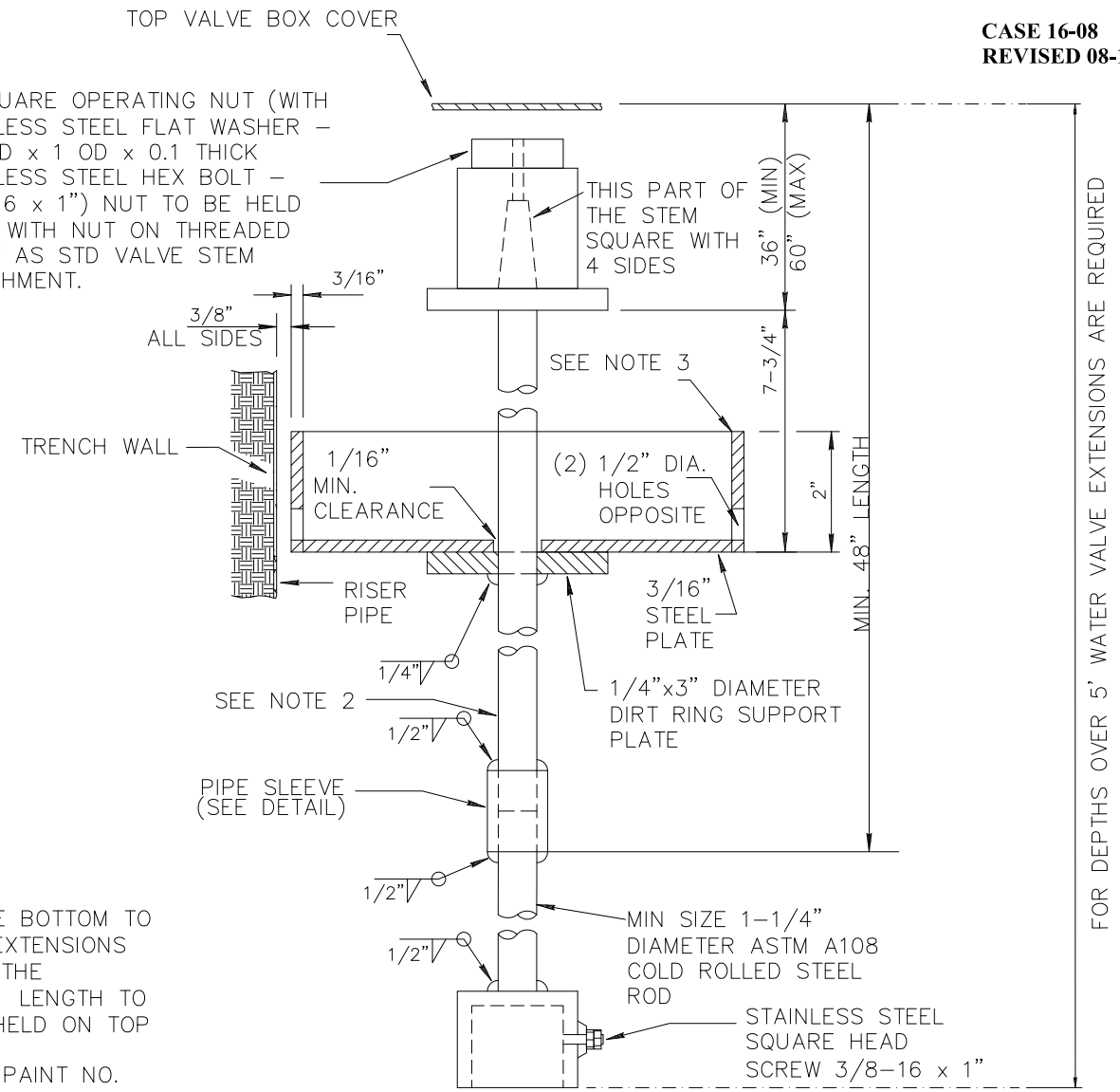

NOTES:

1. EXTENSION STEM: WITH A SQUARE SOCKET ON THE BOTTOM TO FIT A 2" SQUARE VALVE OPERATING NUT. VALVE EXTENSIONS ARE REQUIRED ON ALL VALVES INSTALLED WHERE THE OPERATING NUT IS OVER 5' BELOW THE SURFACE. LENGTH TO FIT EACH INSTALLATION. OPERATING NUT TO BE HELD ON TOP OF EXTENSION WITH STOP NUT.
2. PAINTING: ALL STEEL TO HAVE A PRIME COAT OF PAINT NO. 1-D AND ONE HEAVY APPLICATION (FINISH COAT) OF PAINT NO. 9 AS PER SECT. 790.
3. DIRT RING TO FLOAT FREELY ON THE TOP OF THE SUPPORT PLATE.
4. PIPE SLEEVE SHALL BE SECURELY WELDED TO THE UPPER AND LOWER PORTION OF THE 1-1/4" EXTENSION ROD.

DRAFT		STANDARD DETAIL		REVISED DRAFT	DETAIL NO.
393	MARICOPA ASSOCIATION of GOVERNMENTS	ENGLISH	WATER VALVE EXTENSION	01-01-2017	393

POLYMER MODIFIED ASPHALT CONCRETE

719.1 DESCRIPTION:
The work under this section shall consist of furnishing, proportioning and mixing all the ingredients necessary to produce a polymer modified asphalt concrete (PMAC) material.

719.2 MATERIALS:

719.2.1 Binder The binder used in PMAC shall meet the requirements of Table 711-2 as specified by the engineer.

719.2.2 Aggregate: Coarse and fine aggregates shall conform to the applicable requirements of Tables 719-1 and 719-2 below. Coarse mineral aggregate shall consist of crushed gravel, crushed rock, or other approved inert material with similar characteristics, or a combination thereof, conforming to the requirements of these specifications.

Coarse aggregate is material retained above the Number 8 sieve and fine aggregate is material passing the Number 8 sieve. Aggregates shall be free of deleterious materials, clay balls, and adhering films or other material that prevent thorough coating with the asphalt cement. Mineral aggregate shall conform to the following requirements when tested in accordance with the applicable test methods.

TABLE 719-1	
MIX DESIGN GRADATION REQUIREMENTS WITH MINERAL ADMIXTURE	
Sieve Size	**Percent Passing**
1” (25 mm)	100
¾” (19 mm)	100
½” (12.5 mm)	90-100
⅜” (9.5 mm)	75-90
No. 8 (2.36 mm)	40-50
No. 40 (425 µm)	10-20
No. 200 (75 µm)	2.0-10.0

The combined aggregate properties shall conform to the requirements of Table 719-2.

719.2.3 Mineral Admixture: Mineral admixture used in PMAC shall be dry hydrated lime conforming to the requirements of ASTM C1097 or Portland cement conforming to ASTM C150 for Type II, or ASTM C595 for Type IP. The minimum mineral admixture content will be 1.0 percent, by weight of total aggregate. Mineral admixture shall be considered part of the total weight of aggregate and all combined specific gravity and combined water absorption calculations for aggregates and mineral admixture will be done in accordance with the latest edition of the Asphalt Institute’s Manual MS-2 (AI MS-2).

TABLE 719-2		
COARSE/FINE AGGREGATE REQUIREMENTS		
Characteristics	**Test Method**	**Requirements**
Fractured Faces, % (Plus No. 8)	ARIZ-212	85, 1 fracture 80, 2 or more
Uncompacted Voids, %	AASHTO T-304, Method A	45.0
Sand Equivalent (Minus No. 4)	AASHTO T-176	50 minimum
Plasticity Index	AASHTO T-89 & T-90	Non Plastic
L.A. Abrasion, % Loss	AASHTO T-96	9 max. @ 100 Rev. 40 max. @ 500 Rev.
Combined Bulk Specific Gravity	AI MS-2	2.35-2.85
Combined Water Absorption, %	AI MS-2	0-2.5

719.3 MIX DESIGN REQUIREMENT:

719.3.1 General: The mix design for PMAC shall be prepared by a laboratory that is accredited through the AASHTO Accreditation Program (AAP) in Hot Mix Asphalt Aggregates and Hot Mix Asphalt. The laboratory shall be under the direct supervision of a Civil Engineer, registered by the State of Arizona, and who is listed by ADOT as a "Qualified Asphaltic Concrete Mix Design Engineer" within ADOT's latest list of approved laboratories. The latest list of approved laboratories is available on ADOT's web page www.azdot.gov. The date of the design shall not be older than one year from the date of submittal, unless supportive documentation is provided and approved by the Engineer.

The mix design report shall include the following elements as a minimum.

(1) The name and address of the testing organization and the person responsible for the mix design report.

(2) The mix plant identification and/or location, as well as the supplier or producer name.

(3) A description of all products that are incorporated in the asphalt concrete along with the sources of all products, including admixtures and asphalt binder, and their method of introduction.

(4) The supplier and grade of asphalt binder, the source and type of mineral aggregate, and the percentage of asphalt binder and mineral admixture used.

(5) The mix design report shall identify this as a Marshall 75-blow mix design

(6) The results of all testing, determinations, etc., such as: specific gravity and gradation of each component, water absorption, sand equivalent, loss on abrasion, fractured coarse aggregate particles, Tensile Strength Ratio (ASTM D4867), Marshall stability and flow, asphalt absorption, percent air voids, voids in mineral aggregate, and bulk density. Historical abrasion values may be supplied on existing sources. The submittal should include a plot of the gradation on the Federal Highway Administration's 0.45 Power Gradation Chart, plots of the compaction curves and the results of moisture sensitivity testing.

(7) The laboratory mixing and compaction temperature ranges for the supplier and grade of asphalt binder used within the mix design, and specific gravity at 77°F.

(8) A specific recommendation for design asphalt binder content and any limiting conditions that may be associated with the use of the design, such as minimum percentages of crushed or washed fine aggregate.

(9) The supplier's product code, the laboratory Engineer's seal (signed and dated), and the date the design was performed.

The mix design shall be submitted to the Agency or Engineer by the Contractor/Supplier for which it was developed as part of his project submittals. Once the mix design has been approved by the agency or Engineer, the Contractor and/or his supplier shall not change plants nor use additional mixing plants without prior approval of the Engineer. A new mix design shall be submitted when any changes occur in the plant operation, the producer's pit, the asphalt binder, including modifiers in the asphalt binder, or any other item that will cause an adjustment in the mix.

719.3.2 Mix Design Criteria: The mix design shall be performed by the Marshall Mix Design method. A minimum of 4 points will be used to establish the mix design results. The oven aging period for Marshall mix design samples shall be 2 hours.

719.3.2.1 Marshall Mix Design: The Marshall Mix Design shall be performed in accordance with the requirements of the latest edition of the Asphalt Institute's Manual, MS-2 "Mix Design Methods for Asphalt Concrete." The mix shall use the compactive effort of 75 blows per side of specimen, unless specified otherwise by the engineer. The mix shall comply with the criteria in Table 719-3.

The mix design for PMAC shall be prepared by a laboratory that is accredited through the AASHTO Accreditation

Program (AAP) in Hot Mix Asphalt Aggregates and Hot Mix Asphalt. The laboratory shall be under the direct supervision of a Civil Engineer, registered by the State of Arizona, and who is listed by ADOT as a "Qualified Asphalt Concrete Mix Design Engineer" within ADOT's list of approved laboratories.

The date of the design shall not be older than two years from the date of submittal, unless supportive documentation is provided and approved by the Engineer.

Mix designs are subject to approval by the Engineer.

TABLE 719-3		
MARSHALL MIX DESIGN CRITERIA		
Criteria	Requirements 1/2" Mix	Designated Test Method
1. Binder Content, Minimum	6.1%	---
2. Voids in Mineral Aggregate: %, min	14	AI MS-2
3. Effective Voids: %, Range	4.0±0.2	AI MS-2
4. Absorbed asphalt: %, Range*	0-1.0	AI MS-2
5. Dust to Eff. Asphalt Ratio, Range **	0.6-1.4	AI MS-2
6. Tensile Strength Ratio: % Min.	65	ASTM D4867
7. Dry Tensile Strength: psi, Min.	100	ASTM D4867
8. Stability: pounds, Minimum	2,500	ASTM D6926
9. Flow: 0.01-inch, Range, Minimum	8	ASTM D6927
10. Mineral Aggregate Grading	---	AASHTO T-27 & T11

* Unless otherwise approved by the Engineer.

** The ratio of the mix design composite gradation target for the No. 200 sieve, including admixture, to the effective asphalt content shall be within the indicated range

SECTION 326

PLACEMENT AND CONSTRUCTION OF POLYMER MODIFIED ASPHALT CONCRETE

326.1 DESCRIPTION:

This section is to provide specifications for furnishing all materials, mixing at a plant, hauling and placing a mixture of aggregate materials, mineral admixture and asphalt binder to form a pavement course for placement upon a previously prepared base or sub base.

326.2 MATERIALS AND MANUFACTURE:

The materials shall conform to Section 719 for the type specified. The specific required mix type shall be called out in the contract documents or as directed by the Engineer.

326.3 WEATHER AND MOISTURE CONDITIONS:

Asphalt concrete shall be placed only when the surface is dry, and when the atmospheric temperature in the shade is 40 degrees F. (50 degrees F for Asphalt Concrete lift less than 2 inch thick) or greater. No asphalt concrete shall be placed when the weather is foggy or rainy, or when the base or sub base on which the material is to be placed is unstable. Asphalt concrete shall be placed only when the Engineer determines that weather conditions are suitable.

326.4 APPLICATION OF TACK COAT:

A tack coat shall be applied to all existing and to each new course of asphalt concrete prior to the placing of a succeeding lift of asphalt concrete. If approved by the Engineer, the tack coat may be deleted when a succeeding layer of asphalt concrete is being applied over a freshly laid course that has been subjected to very little traffic.

The application of the tack coat shall comply with Section 329. The grade of emulsified asphalt shall be SS-1h or CSS-1h as specified in Section 713.

The same material that is specified above for the tack coat shall be applied to the vertical surfaces of existing pavements, curbs, and gutters, against which asphalt concrete is to be placed.

The surface to be covered may require repair or patching as directed by the Engineer. This shall be addressed in the project specifications prior to the bidding of the project.

326.5 MIX DESIGN:

The mix design shall be submitted to the Engineer at least five working days prior to the start of asphalt concrete production. Mix designs provided by the agency may be utilized on projects at the Engineer's discretion. The Engineer will review and approve the mix design to assure it contains all of the required information as outlined in Section 719.3.1. The target values for gradations, binder contents, and air voids will be established as the accepted Job Mix Formula (JMF) based upon the mix design. Mix designs not containing all of the information will be returned within five working days of receipt of all mix design information, for action and resubmission by the contractor.

Once the mix design has been approved by the agency and the mixing plant selected, the Contractor and/or his supplier shall not change plants nor utilize additional mixing plants without prior approval of the Engineer.

If the contractor elects to change its source of material, the contractor shall furnish the Engineer with a new mix design, which meets the requirements of Section 719, as amended by the Project Specifications.

The contractor may make self-directed target changes to the approved mix design within the limits shown below. Requests for self-directed target changes shall be made in writing and acknowledged by the Engineer prior to the start of production of a lot and will remain in effect until such time as any additional changes are implemented. The self-directed target changes must meet the contract requirements for mix design criteria and gradation limits.

TABLE 326-1 ALLOWABLE SELF-DIRECTED TARGET CHANGES	
MEASURED CHARACTERISTICS	ALLOWABLE SELF-DIRECTED TARGET CHANGES
Gradation (Sieve Size)	
3/8 inch	± 4% from mix design target value
No 8	± 4% from mix design target value
No 40	± 2% from mix design target value
No 200	+0.5% from mix design target value
Binder Content	± 0.2% from mix design target value
Effective Air Voids	None

The contractor may propose target changes, other than self-directed changes, to the approved mix design for the approval of the Engineer. The Engineer will determine if the proposed target change will result in mix production that meets the contract requirements for mix design criteria and gradation limits. The target changes will not be retroactive for the purpose of acceptance.

326.6 MIX PRODUCTION:

All materials shall be proportioned by weight in a hot mix asphalt plant in the proportions required by the mix design to provide a homogeneous and workable mass. Each hot mix asphalt plant shall be inspected in accordance with the provisions contained in the 'Hot Mix Asphalt Production Facilities' by the Arizona Rock Products Association and shall have a current inspection certificate. All measuring devices shall be calibrated at least annually by a technician licensed by the Arizona Bureau of Weights & Measures. Mixing plants shall conform to the requirements of AASHTO M-156, except as modified herein.

In drum mix plants the mineral admixture shall be added and thoroughly mixed with the mineral aggregate by means of a mechanical mixing device prior to the mineral aggregate and mineral admixture entering the dryer. The moisture content of the combined mineral aggregate shall be a minimum of three percent by weight of the aggregate during the mixing process.

For drum-mix plants, the mineral admixture shall be weighed across a weight belt, or other approved alternative weighing system, with a weight totalizer prior to entry into the mechanical mixing device. The mechanical mixing device shall be a pugmill type mixer that is in good working condition. The rate of the aggregate feed shall not exceed the mixing device's capacity in ton per hour. The mixer shall be constructed to minimize the loss of mineral admixture and shall be located in the aggregate delivery system at a location where the mixed material can be readily inspected. The mixing device shall be capable of effective mixing in the full range of the asphalt concrete production rates.

The hot plant and equipment shall be constructed and operated to prevent loss of mineral admixture through the dust collection system of the plant.

A positive signal system shall be provided and used during production whereby the mixing shall automatically be stopped if the mineral admixture is not introduced into the mineral aggregate. The plant will not be permitted to operate unless the signal system is in good working condition.

The introduction of bituminous material shall be controlled by an automated system fully integrated with the controls or the mineral aggregate and mineral admixture. The production of the plant shall be controlled by the rate required to obtain a uniform mixture of all components. Drying and heating shall be accomplished in such a manner as to preclude the mineral admixture from becoming coated with un-spent fuel. The completed asphalt concrete may be held in storage for up to 12 hours in insulated or heated silos, providing the minimum temperature noted herein for placement and compaction is met behind the placement device. If the Engineer determines that there is an excessive amount of heat, heat loss, drain down, segregation and/or oxidation of the mixture due to temporary storage, use of surge bins or storage bins will be discontinued.

The temperature of the asphalt concrete upon discharge from the mixer shall not exceed 335 degrees F. The discharge temperature may be increased to 350 degrees F if the binder supplier affirms that no binder degradation will occur from such an increase, and when approved by the Engineer. If the asphalt concrete is discharged from the mixer into a hopper, the hopper shall be constructed so that segregation of the asphalt concrete will be minimized.

326.7 TRANSPORTATION:

Petroleum distillates or other substances that will have a detrimental effect on the asphalt concrete shall not be used as a release agent.

The beds of all transportation units shall be clean and smooth to allow the free flow of material into the paving machine's hopper.

Tarpaulins shall be furnished on all trucks and used when weather condition warrant, or if directed by the Engineer.

326.8 PLACEMENT:

Placement of asphalt concrete pavement shall not commence until authorized by the Engineer. The Engineer's authorization to allow commencement of asphalt concrete paving will generally require all newly constructed valley gutters, curbing, and curb and gutters which new pavement is to be placed against to be in-place and in an acceptable condition. While it is preferred to have all newly constructed concrete items against which new pavement is to be placed be in an acceptable condition, the Engineer may allow paving to commence based on weather, the amount of defective concrete, or other considerations.

326.8.1 Placing: All courses of asphalt concrete shall be placed and finished by means of a self-propelled paving machine equipped with an automatically actuated control system, except under certain conditions or at locations where the Engineer deems the use of a self-propelled paving machine impracticable.

The control system shall control the elevation of the screed at each end by controlling the elevation of one end directly and the other end indirectly either through controlling the transverse slope or alternatively when directed, by controlling the elevation of each end independently.

The control system shall be capable of working with one of the following devices:

(a) Ski or non-contact device of not less than 30 feet in length, supported throughout its entire length
(b) Taut stringline or wire set to grade
(c) Short ski or sonar sensing units from curb control
(d) Joint matching shoe

Failure of the control system to function properly shall be cause for the suspension of asphalt concrete production. In order to achieve a continuous operation, the speed of the paving machine shall be coordinated with the hot mix plant and transport units.

If the asphalt concrete is dumped from the hauling vehicles directly into the paving machine, care shall be taken to avoid jarring the machine or moving it out of alignment. No vertical load shall be exerted on the paving machine by the truck.

If asphalt concrete is dumped upon the surface being paved and subsequently loaded in the paving machine, the loading equipment shall be self-supporting and shall not exert any vertical load on the paving machine. Substantially all of the asphalt concrete shall be picked up and loaded into the paving machine.

Self-propelled paving machines shall spread the mixture without segregation or tearing, true to line, grade and crown indicated on the project plans. Pavers shall be equipped with hoppers and augers that will distribute the mixture uniformly in front of an adjustable floating screed. The raising of the hopper wings must be minimized and the paving machine will not be operated when in an empty condition.

Screeds shall include any strike-off device operated by tamping or vibrating action which is effective, without tearing, shoving or gouging the mixture and which produces a course with a uniform texture and density for the full width being paved. Screeds shall be adjustable as to height and crown and shall be equipped with a controlled heating device for use when required. In the case of the screed, auger extensions and vibrators shall be installed wherever the screed is extended more than one (1) foot beyond the end of the base auger or auger extension. However, when placing material against an extremely uneven curb or edge over a short distance, the Engineer may waive the auger extensions and vibrators.

At any place not accessible to the roller, the mixture shall be thoroughly compacted with tampers to provide a uniform and smooth layer over the entire area compacted in this manner.

326.8.2 Joints: Transverse joints, before a surface course is placed in contact with a cold transverse construction joint, the cold existing asphalt concrete shall be trimmed to a vertical face for its full depth exposing a fresh face. The fresh face shall be tack coated prior to placement of the new asphalt concrete. After placement and finishing the new asphalt concrete, both sides of the joint shall be dense and the joint shall be smooth and tight. The surface in the area of the joint shall not deviate more than 1/4 inch from a 12-foot straightedge, when tested with the straightedge placed across the joint, parallel to the centerline.

Longitudinal joints of each asphalt course shall be staggered a minimum of 6 inches with relation to the longitudinal joint of the immediate underlying course's cold longitudinal construction joint.

Longitudinal joints with existing or cold (more than 32 hours old) asphalt concrete shall require the existing pavement to be trimmed to a vertical face for its full depth exposing a fresh face. The fresh face shall be tacked prior to placement of the adjacent course. Longitudinal joints with an existing asphalt pavement that is less than 32 hours old that has had its edge protected from damage may have adjacent new asphalt concrete placed after applying the required tack coat. After placement and finishing of longitudinal joints, both sides of the joint shall be dense and the joint shall be smooth and tight. The surface in the area of the joint shall not deviate more than 1/4 inch from a 12-foot straightedge, when tested with the straightedge placed across the joint, in any direction.

326.8.3 Asphalt Leveling Course: A leveling course shall be used when specified, or as directed in writing by the Engineer, to bring existing pavement to a uniform grade prior to placing an overlay or other course. If a leveling course is being applied on an asphalt surface, a tack coat shall be applied. The compaction requirements contained in Section 326.10 do not apply to leveling courses.

326.8.4 Compaction; Asphalt Base Course and Surface Course: It is the contractor's responsibility to perform Quality Control monitoring and/or testing during compaction operations to achieve the required density. The temperature of the asphalt concrete immediately behind the laydown machine shall be at least 265 degrees F. A probe type electronic thermometer with a current calibration sticker attached will be used to measure the temperature of the asphalt concrete mixture. When measuring the temperature of the mat, the probe shall be inserted at mid-depth and as horizontal as possible to the mat. The contractor is responsible to achieve the required compaction.

Asphalt compaction equipment shall be of sufficient size and weight to accomplish the required compaction. All compaction equipment shall be operated and maintained in accordance with the manufacturer's recommendations and the project requirements. During the rolling operation, the speed of the roller shall not exceed three miles per hour, unless otherwise approved by the Engineer.

Pneumatic tired compactors shall be equipped with skirt-type devices mounted around the tires so that the temperature of the tires will be maintained during the compaction process.

The Engineer will determine the acceptability of the pavement compaction in accordance with Section 326.10.

326.8.5 Smoothness: The completed surfacing shall be thoroughly compacted, smooth and true to grade and cross-section and free from ruts, humps, depressions or irregularities. An acceptable surface shall not vary more than 1/4 inch from the lower edge of a 12-foot straightedge when the straightedge is placed parallel to the centerline of the roadway.

326.8.6 Polymer Modified Asphalt Concrete Overlay: Polymer modified asphalt concrete overlay consists of the placing and compacting plant mix polymer modified asphalt concrete over existing pavement. The mix design and thickness of the overlay shall be as shown on the plans or as specified in the special provisions.

Except when the existing asphalt surface is to be preheated and remixed, pavement surfaces shall be prepared as follows:

(a) Areas designated for pavement repair by the contract documents (which may include severely raveled areas, severely cracked areas, over-asphalted areas, and other defects) shall be cut out and replaced. Pavement repairs shall be completed and approved before placing the overlay.

(b) Before placing the overlay, raised pavement markers shall be removed, and milling shall be completed. Milling shall be as shown on the plans or specified in the special provisions and shall be in accordance with Section 317.

(c) After pavement repairs and milling have been completed the entire surface shall be cleaned with a power broom.

(d) After surfaces have been prepared to the satisfaction of the Engineer, they shall receive a tack coat per Section 326.4. Traffic will not be permitted to travel over surfaces which have received a tack coat, except when tack coat is applied to milled surfaces in compliance with Section 317.2 for dust control purposes. When the overlay is to extend onto a concrete surface, the concrete surface shall be thoroughly cleaned of loose dust and cement particles and shall be tack coated.

The overlay shall be placed as specified in Section 326.8.1 and compacted as specified in Section 326.8.4. The surface smoothness shall meet the tolerances specified in Section 326.8.5.

Frames and covers of manholes, survey monuments, valve boxes, clean-outs and other existing structures shall be adjusted in accordance with Section 345 to set flush with the finished surface of the new pavement. During adjustment, if pavement or base materials are removed or disturbed, they shall be replaced with approved materials installed in a manner acceptable to the Engineer.

On roads without curb and gutter, the existing unpaved shoulder elevation shall be adjusted by the Contractor to match the elevation at the edge of the new overlay and slope away from the new pavement surface at a rate that the existing quantity of shoulder material will allow. Shoulder material shall be compacted to a minimum of 95% of maximum density, determined in accordance with Section 301.3. Shoulder adjustment to match the new pavement surface elevation shall not be measured. The cost of shoulder adjustment shall be included in the price paid for the asphalt concrete overlay or other related pay items. When the Engineer determines an insufficient amount of material is available for shoulder adjustment, the Engineer may require the Contractor to provide additional material. Acceptable material for shoulders includes the existing shoulder material, millings, untreated base materials, or a granular material approved by the Engineer. Engineer requested imported material for shoulder adjustment is not included in the price paid for the asphalt concrete overlay.

326.8.7 Pavement Fabric Interlayer: Pavement fabric interlayer shall be used only when specified on the plans or in the specifications.

Pavement fabric interlayer shall be in accordance with Table 796-1 and be the class designated on the plans or in the specifications.

Asphalt binder coat used to bond the fabric to the pavement shall be paving asphalt PG 70-10 asphalt cement conforming to the requirements of Section 711. The application and distributing equipment for the asphalt binder shall conform to the requirements of Section 330. The asphalt binder coat shall be uniformly spray applied to the prepared pavement surface at the rate of 0.20 gallons per square yard for Class B fabric or at the rate of 0.25 gallons per square yard for Class A fabric. Some underlying surfaces may require a higher or lower application rate. A test strip may be necessary to determine the proper application rate. The width of liquid asphalt cement application shall be the fabric width, plus six inches.

Neither the asphalt binder coat or fabric interlayer shall be placed when weather conditions, in the opinion of the Engineer, are not suitable. The asphalt binder and fabric interlayer shall only be placed when the pavement is dry, the ambient air temperature is 50 degrees F and rising, and pavement temperature is 40 degrees F and rising.

Equipment for placing the fabric shall be mechanized and capable of handling full rolls of fabric. The equipment shall be able to lay the fabric smoothly to maximize pavement contact and remove air bubbles. Stiff bristle brooms shall be used to smooth the fabric. The equipment used to place the fabric shall be in good working order and is subject to approval by the Engineer.

Pavement fabric interlayer shall not be placed if the in-place binder is hotter than 325 degrees F or has cooled to 180 degrees F or below (as determined by non-contact thermometer).

Pavement fabric interlayer shall be placed onto the asphaltic binder with the heat bonded side up with a minimum amount of wrinkling or folding. Remaining wrinkles or folds 1-inch and larger shall be removed or slit and shingle-lapped in the direction of paving. Burning or torching of wrinkles is not allowed. Fabric shall overlap three to six inches to insure full closure of the joint. Transverse joints shall be shingle-lapped in the direction of paving to prevent edge pickup by the paver. A second application of hand-placed asphalt binder may be required at laps and repairs as determined by the Engineer to ensure proper binding of the narrow double fabric layer.

All areas where fabric has been placed shall be paved with asphaltic concrete during the same workshift. Placement of the asphaltic concrete shall closely follow fabric lay down. The temperature of the asphaltic concrete immediately behind the laydown machine shall not exceed 335 degrees F, unless the binder supplier has affirmed a higher tempature range in writing. In the event that the asphalt binder coat bleeds through the fabric causing construction problems before the overlay is placed, the affected areas shall be sanded with a sand blotter in compliance with Section 333. Excess sand shall be removed before beginning the paving operation. In the event of rainfall prior to the placement of the asphaltic concrete, the fabric shall be allowed to dry before the asphalt concrete is placed.

Turning of the paving machine or of other vehicles on the fabric shall be gradual and kept to a minimum to avoid damage to the fabric. Should equipment tires stick to the fabric during pavement operations, small quantities of paving asphalt concrete shall be broadcast on the fabric to prevent pick-up. Decrease of binder rate in order to minimize pick-up on tires is not allowed.

326.8.8 Thickened Edge: Shall be constructed in accordance with Section 321.8.8

326.8.9 Safety Edge: Shall be constructed in accordance with Section 321.8.9

326.8.10 Protection for Asphalt Base Course: Arterial roadway traffic shall not be allowed on a new asphalt base course that is less than five inches (5”) in thickness without the written consent of the Engineer.

326.9 QUALITY CONTROL:

It is the contractor’s responsibility to perform Quality Control monitoring and/or testing during asphalt concrete production to achieve the required compaction and to perform Quality Control monitoring and/or testing during asphalt concrete production to achieve the required mix properties. The Engineer may obtain samples of any portion of any material at any point of the operations for his own use. Also, the Engineer may order the use of any drying, proportioning and mixing equipment or the handling of any material discontinued which, in his/her opinion, fails to produce a satisfactory mixture.

The asphalt concrete produced shall conform to the requirements of the production tolerances established in Section 326.10. When the asphalt concrete does not conform to the production tolerances, it shall be reported to the Engineer, and corrective quality control measures shall be implemented, or production shall cease immediately at no additional cost to the contracting Agency.

Requests for referee testing as described in Section 326.11 will only be considered based on quality control test results performed by a laboratory accredited by the AASHTO Accreditation Program (AAP) for the tests being performed or a laboratory listed in the current ADOT Directory of Approved Materials Testing Laboratories for the set of tests in question. The laboratory shall use properly certified technicians in accordance with ASTM D3666, Section 7 (Personnel Qualifications).

326.10 ACCEPTANCE:

326.10.1 Acceptance Criteria: Asphalt concrete will be divided into lots for the purpose of acceptance. A lot shall be one day’s production. Each lot shall be divided into sublots of 500 ton or fraction thereof. Tests used to determine acceptance will be performed by a laboratory accredited by the AASHTO Accreditation Program (AAP) for the tests being performed. The contracting agency shall provide an appropriately accredited laboratory or laboratories to perform the acceptance testing. Laboratories shall use properly certified technicians in accordance with ASTM D3666, Section 7 (Personnel Qualifications). The acceptance laboratory will take representative samples of the asphalt concrete from each sublot to allow for testing of gradation, binder content, air voids, pavement thickness, and compaction of base and surface courses. Acceptance of each sublot will be based on the test data from the sample(s) from that sublot. All acceptance samples shall be taken using random

locations or times designated by the Engineer in accordance with ASTM D3665.

326.10.2 Gradation, Binder Content and Air Voids: The acceptance laboratory will take a sample of the asphalt concrete in accordance with the requirements of Section 2 or 4 of Arizona Test Methods 104 or AASHTO T-168 from each sublot. The minimum weight of the sample shall be 45 pounds. Asphalt binder content and gradation shall be determined in accordance with AASHTO T-308 using the ignition furnace for each sublot. The acceptance laboratory is responsible for obtaining the necessary materials and performing an ignition furnace calibration as outlined in AASHTO T-308 for each asphalt concrete mixture utilized on the project. The correction factor used for each test shall be clearly indicated on the report. The bulk density for Marshall Mix designs shall be tested in accordance with AASHTO T-245. The bulk density for Gyratory mix designs shall be determined in accordance with AASHTO T-312. The maximum theoretical density shall be determined in accordance with the requirements of AASHTO T-209 including fan drying per AASHTO T-209 Section 15. Effective voids of the laboratory compacted specimens will be determined at a minimum of once per lot in accordance with the requirements of AASHTO T-269. Should the testing for effective air voids not meet the "Full Payment" or "No Corrective Action" requirements of Table 326-5, additional testing for laboratory air voids on the remaining sublots will be performed as necessary to determine the extent of the deficiency. Acceptance testing results will be furnished to the contractor and the supplier within five working days of receipt of samples by the acceptance laboratory.

During production, the allowable deviations from the mix design gradation targets are listed in the tables below. The allowable production tolerances may fall outside of the mix design gradation bands.

TABLE 326-3	
GRADATION ACCEPTANCE LIMITS FOR PMAC	
Sieve Size	
1 inch	---
3/4 inch	---
1/2 inch	±7%
3/8 inch	±6%
No. 8	±6%
No. 40	±4%
No. 200	±2%

If the results from a single acceptance sample fall outside of the acceptance limits in Table 326-3 as applicable, a second sample shall be taken and if the second acceptance sample is also outside of the acceptance limits the Contractor shall cease production of asphalt concrete. Production shall not begin again until calibration test results verify that adjustments made to materials or proportions yield a gradation that falls within acceptance limits in Table 326-3 or as applicable.

If the asphalt binder content is within ± 0.50% of the mix design target value, the asphalt concrete will be paid for at the contract unit price. If the asphalt binder content deviates by more than ± 0.50% from the mix design target value, the deficient area will be evaluated within the sublot by coring one additional location at a maximum interval of 100 feet on each side of the deficient sample. The asphalt content of the original deficient sample will be averaged with the asphalt binder content of the two additional cores to determine compliance with the acceptance requirements. If the resulting average of the asphalt binder content deviates by more than ± 0.50% from the mix design target value, then Table 326-4 shall apply to the sublot. If approved by the Engineer, the Contractor may obtain additional cores to assist in formulation of an Engineering Analysis, but the additional cores shall not be used for re-evaluating acceptance.

TABLE 326-4		
ASPHALT BINDER CONTENT ACCEPTANCE AND PENALTIES		
Deviation from that permitted	When the contracting agency is the owner: Payment Reduction ($ per ton of asphalt concrete)	When the contracting agency is not the owner (i.e. permits): Corrective Action
Over 0.2% above that permitted	Removal* or EA	Removal* or EA
Over 0.1% to 0.2% above that permitted	$6.00	EA
Over 0.0% to0.1% above that permitted	$2.00	EA
Within permitted range	Full Payment	No Corrective Action
Over 0.0% to0.1% below that permitted	$2.00	EA
Over 0.1% to 0.2% below that permitted	$6.00	EA
Over 0.2% below that permitted	Removal* or EA	Removal* or EA

NOTES: *The Contractor shall remove and replace the entire sublot that is deficient.
EA = Engineering Analysis per Section 326.10.6

If the laboratory air voids fall within a range of -1.5% and +2% of the design target, the asphalt concrete will be paid for at the contract unit price. If the laboratory air voids are outside of this range, the deficient area will be evaluated within the sublot by coring one additional location at a maximum interval of 100 feet on each side of the deficient sample. The laboratory air voids of the original deficient sample will be averaged with the laboratory air voids obtained from each of the two additional cores to determine compliance with the acceptance requirements. If the resulting average of the laboratory air voids is outside the indicated range, then Table 326-5 shall apply to the sublot. If approved by the Engineer, the Contractor may obtain additional cores to assist in formulation of an Engineering Analysis, but the additional cores shall not be used for re-evaluating acceptance.

TABLE 326-5		
LABORATORY VOIDS ACCEPTANCE AND PENALTIES		
Laboratory Air Voids (Measured at N_{des} or 75 blows as applicable)	When the contracting agency is the owner: Payment Reduction ($ per ton of asphalt concrete)	When the contracting agency is not the owner (i.e. permits): Corrective Action
Greater than -2.7% from Target	Removal* or EA	Removal* or EA
-2.7% to -2.1% from Target	$5.00	EA
-2.0% to -1.6% from Target	$2.00	EA
-1.5% to +2% from Target	Full Payment	No Corrective Action
+2.1 to +2.9% from Target	$2.00	EA
+3.0% to +4.0% from Target	$5.00	EA
Greater than 4.0% from Target	Removal* or EA	Removal* or EA

NOTES: *The Contractor shall remove and replace the entire sublot that is deficient.
EA = Engineering Analysis per Section 326.10.6

If an agency or Engineer is purchasing asphalt concrete directly from a commercial material supplier, the agency or Engineer will use Section 326.10, and specifically Table 326-3 as applicable, 326-4 and 326-5 from Section 326.10, when determining the acceptance of the asphalt concrete with the material supplier.

326.10.3 Surface Testing: If directed by the Engineer surface drainage test shall be performed. The completed surfacing shall be thoroughly compacted, smooth and true to grade and cross-section and free from ruts, humps, depressions or irregularities. An acceptable surface shall not vary more than 1/4 inch from the lower edge of a 12-foot straightedge when the straightedge is placed parallel to the centerline of the roadway. The straightedge shall be furnished by the contractor and shall be acceptable to the Engineer.

All streets shall be water tested for drainage in the presence of the Engineer or designated representative before final acceptance. Any areas not draining properly shall be corrected to the Engineer's satisfaction at the Contractor's expense. Water for this testing shall be provided and paid for by the Contractor.

When deviations in excess of the above tolerance are found, humps or depressions shall be corrected to meet the specified tolerance. The defective pavement shall be cut out along neat straight lines or for multiple course pavements the surface course may be milled out, and the removed pavement replaced with fresh hot mixture and thoroughly compacted to conform with and bond to the surrounding area. Materials and work necessary to correct such deviations shall be at no additional cost to the Contracting Agency.

When pavement is cut out along neat straight lines, full depth longitudinal joints shall not be located within a lane wheel path or within forty-eight inches (48") of an asphalt pavement edge. Longitudinal joints shall comply with the restrictions for Type A Trench Repairs in Section 336.3.

326.10.4 Asphalt Pavement Thickness: Asphalt pavement thickness will be determined from cores secured from each lift of each sublot. Such cores will be taken and measured by the Asphalt Concrete Coring Method. This method is found in Section 321.14. Each core location will be patched by the party responsible for the testing.

Acceptance or assessment of penalties for asphalt pavement thickness will be based on the combined total thickness of all asphalt concrete layers omitting all layers of asphalt-rubber asphalt concrete. If the final total pavement thickness exclusive of all ARAC layers is deficient from the target thickness by 0.25 inches or less, it will be paid for at the contract unit price.

If the thickness deficiency of the pavement core exceeds 0.25 inch, the thickness deficiency shall be evaluated by coring at a maximum interval of 100 feet on each side of the deficient core. The thickness of the original deficient core will be averaged with the thicknesses of the cores taken from each side of it to determine compliance with the acceptance requirements.

If the pavement thickness deficiency is greater than 0.25 inches and the contracting agency is not the owner (i.e. permits) the following will apply:

(1) If the pavement thickness deviates from the target thickness by more than 0.25 inch but not more than 0.50 inch, corrective action will be required. This corrective action shall consist of application of a Type II slurry seal coat in accordance to Section 715. The Contractor may present an Engineering Analysis outlining other proposed remedial measures for the consideration by the Engineer. The Engineer will review the engineering analysis and decide within 30 working days whether to accept the proposed remedial measures.

(2) If the pavement thickness deviates from the target thickness by more than 0.50 inch, corrective action will be required. The deficient area shall be overlaid with no less than a 1 inch thick lift, for the full width of the pavement to meet or exceed the designed thickness, with appropriate end and edge milling, with a mixture approved by the Engineer. The Contractor may present an engineering analysis outlining other proposed remedial measures for the Engineer's consideration. The Engineer will review the engineering analysis and decide within ten working days whether to accept the proposed remedial measures. If the Engineer chooses to reject the Engineering Analysis, the indicated overlay shall be constructed by the Contractor at no additional cost to the Owner.

If the contracting agency is the owner and the pavement thickness deficiency is greater than 0.25 inches but less than 0.50 inches, Table 326-6 will apply. If the pavement thickness deficiency is greater than 0.5 inches, the deficient area shall be

overlaid with no less than a 1-inch thick lift for the full width of the pavement to meet or exceed the designed thickness using an asphalt mixture approved by the Engineer. The Contractor shall provide appropriate end and edge milling. The overlay and milling shall be accomplished by the Contractor at no additional cost to the contracting agency.

TABLE 326-6	
ASPHALT PAVEMENT THICKNESS PAYMENT REDUCTION For Thickness Deficiency of More Than 0.25 inches and less than 0.50 inches	
Total Specified Asphalt Pavement Thickness exclusive of ARAC (if any)	**Reduction in Payment Applied to asphalt concrete Except ARAC layers (if any)**
Less than 1.5 inches	50%
1.50 inches to 1.99 inches	33%
2.00 inches to 2.49 inches	25%
2.50 inches to 2.99 inches	20%
3.00 inches and greater	17%

326.10.5 Density:

326.10.5.1 Pavement 1-1/2 Inches or Less in Nominal Thickness:

Compaction shall consist of a "Rolling Method Procedure" using an established sequence of coverage with specified types of compactors. A pass shall be defined as one movement of a compactor in either direction. Coverage shall be the number of passes as are necessary to cover the entire width being paved.

The rolling sequence, the type of compactor to be used, and the number of coverages required shall be as shown in Table 326-7.

TABLE 326-7				
ROLLING SEQUENCE FOR LIFT THICKNESS 1½" OR LESS				
Rolling Sequence	**Type of Compactor**		**No. of Coverages**	
	Option No. 1	**Option No. 2**	**Option No. 1**	**Option No. 2**
Initial	Static Steel	Vibrating Steel	1	1
Intermediate	Pneumatic Tired	Vibrating Steel	4	2- 4*
Finish	Static Steel	Static Steel	1-3	1-3
* Based on the roller pattern which exhibits the best performance.				

The Contractor shall select the option for compaction and, when pneumatic-tired compactors are used will designate the tire pressure. Steel wheel compactors shall not be used in the vibratory mode for courses of one inch or less in thickness nor when the temperature of the asphaltic concrete falls below 180 degrees F. Initial and intermediate compaction shall be accomplished before the temperature of the asphaltic concrete falls below 200 degrees F.

Compaction will be deemed to be acceptable on the condition that the asphaltic concrete is compacted using the type of compactors specified, ballasted and operated as specified, and with the number of coverages of the compactors as specified.

326.10.5.2 Pavement Greater than 1-1/2 Inches in Nominal Thickness:

Achieving the required compaction is the responsibility of the contractor. The number and types of rollers is the contractor's responsibility and shall be sufficient to meet these requirements.

In-place air voids shall be determined in accordance with AASHTO T-269 utilizing cores taken from the finished pavement.

The maximum theoretical density used in the determination of in-place air voids will be the average value from the acceptance samples determined for the lot as outlined in 326.10.1.

The Engineer will designate one random test location for each sublot and the acceptance laboratory will obtain one core from that location. Regardless of sublot quantities or boundaries, a minimum of one core will be obtained per residential street and a minimum of one core per travel lane for collector and arterial streets. The outside one foot of each pass of the pavement course or any unconfined edge will be excluded from testing. The Engineer may exclude areas from the compaction lot that are not accessible by normal compaction equipment. All coring shall be in accordance with Section 321.14.

The Contractor shall provide the traffic control to facilitate any coring operations necessary for compaction acceptance.

Cores will be taken per the Asphalt Concrete Coring Method. This method can be found in Section 321.14. Acceptance testing results will be furnished to the contractor within five working days of receipt of samples by the acceptance laboratory.

If the pavement density has in-place voids of between 4.0% and 8.0%, the asphalt concrete will be paid for at the contract unit price. If the acceptance core for a sublot indicates that the pavement density has in-place voids of less than 4.0% or greater than 8.0%, the deficient area will be evaluated by coring two additional locations at maximum intervals of 100 feet from the deficient core. The in-place voids of the original deficient core will be averaged with the in-place voids of the cores taken from 100 feet on each side of it to determine compliance with the acceptance requirements. If the resulting average of the in-place voids is outside the indicated range, then Table 326-8 shall apply to the sublot. If approved by the Engineer, the Contractor may obtain additional cores to assist in formulation of an Engineering Analysis, but the additional cores shall not be used for re-evaluating acceptance. All coring shall be in accordance with Section 321.14.

TABLE 326-8		
PAVEMENT DENSITY PENALTIES		
Limits of In-place Air Voids for design lift thicknesses 1.5 inches and greater	When the contracting agency is the owner Payment Reduction ($ per ton of asphalt concrete)	When the contracting agency is not the owner i.e. permits Corrective Action
Below 3.0%	Removal* or EA	Removal* or EA
3.0% to below 4.0%	$10.00	EA
4.0% to 8.0%	Full Payment	No Corrective Action
Greater than 8.0% to 9.0%	$6.00	EA
Greater than 9.0% to 10.0%	$10.00	EA and Type II Surry Seal
Greater than 10.0%	Removal* or EA	Removal* or EA

NOTES: *The Contractor shall remove and replace the entire sublot that is deficient.
EA = Engineering Analysis per Section 326.10.6

326.10.6 Engineering Analysis (EA): Within 10 working days after receiving notice that a lot or sublot of asphalt concrete is deficient and is found to fall within the "Removal or EA" band per Table(s) 326-4, 326-5, and/or 326-8 the contractor may submit a written proposal (Engineering Analysis) to accept the material in place at the applicable penalties along with possible remediation(s) listed in the "Removal or EA" category. Engineering Analysis can also be proposed for non-removal categories of "Corrective Actions" when the contracting agency is not the owner (i.e. permits).

The Engineering Analysis shall contain an analysis of the anticipated performance of the asphalt concrete if left in place. The Engineering Analysis shall also detail the effect of any proposed corrective action to the material(s) in place as it relates to the in-place material's performance. The Engineering Analysis shall be performed by a professional engineer experienced in asphalt concrete testing and mix designs.

If a lot or sublot is accepted for referee testing and the referee test results still show a deficiency, the contractor shall have ten working days to submit an Engineering Analysis beginning upon notification of referee test results.

When an Engineering Analysis recommends that a specific lot or sublot should not be removed, the Engineering Analysis will recommend that the following penalties (Table 326-9) be paid when the contracting agency is the owner, for the specific criteria being reviewed by the EA.

TABLE 326-9		
ENGINEERING ANALYSIS PENALTIES for REMOVAL* LOTS/SUBLOTS LEFT IN-PLACE		
Acceptance Criteria	**Acceptance Limits**	**Penalty When Contracting Agency is the Owner ($/Ton)**
Asphalt Binder Content	Over 0.2% points from that Permitted	$9.00
Laboratory Air Voids (Measured at N_{des} or 75 blows as applicable)	Less than 1.5% or Greater Than 8.0%	$7.50
Limits of In-place Air Voids	Less than 2.7% or Greater than 4.0% from Target	$15.00

Within 15 working days, the Engineer will determine whether or not to accept the contractor's proposed Engineering Analysis.

326.11 REFEREE:

If the Contractor has reason to question the validity of any of the acceptance test results, the Contractor may request that the Engineer consider referee test for final acceptance. Any request for referee testing must describe the contractor's reasons for questioning the validity of the original acceptance test results and must clearly describe which set of acceptance tests are in question. The engineer may either accept or reject the request for referee testing. When referee testing is accepted the Contractor (at the Contractors own expense) will engage an independent laboratory accredited by the AAP or a laboratory listed in the current ADOT Directory of Approved Materials Testing Laboratories as appropriate the acceptance tests that are being questioned. The independent referee laboratory shall use properly certified technicians in accordance with ASTM D3666, Section 7 (Personnel Qualifications). For the set of test results in question the referee laboratory shall perform a new set of acceptance tests (as required by Section 326.10 representing the area for the set of tests in question). The referee tests will replace the original acceptance tests that were in question.

These tests may include asphalt binder content, aggregate gradation, Marshall or Gyratory unit weight, maximum theoretical unit weight, laboratory air voids and in-place air voids (compaction). Samples for referee testing shall come from representative samples obtained from the completed pavement, as directed by the Engineer.

The number of samples taken will be the same as specified in Section 326.10. The independent laboratory shall compile the test results and transmit them to both the Engineer and the contractor. The independent laboratory shall include a report sealed and signed by an Engineer registered in the State of Arizona, who is experienced in asphalt concrete testing and mix design development. The signed report shall give an opinion that the material evaluated does or does not comply with project specifications, shall clearly describe any deficiencies, and the results will be binding between all parties.

SECTION 326

326.12 MEASUREMENT:

Asphalt concrete pavement will be measured by the ton, or by the square yard, for the mixture actually used as allowed above, which shall include the required quantities of mineral aggregates, asphalt binder, and mineral admixture. Measurement shall include any tonnage used to construct intersections, roadways, streets, or other miscellaneous surfaces indicated on the plans or as directed by the Engineer.

Measurement for safety edge preparation only applies to overlays of existing pavements that require the construction of a safety edge when none exists. Safety edge preparation will be measured by the linear foot. Safety edge preparation will not be measured when a safety edge is part of new pavement construction, pavement widening, or when overlaying an existing pavement that contains a safety edge. The asphalt concrete pavement measurement shall include the tonnage used to construct safety edges or the square yard measurement for asphalt concrete pavement will be increased by the horizontal extension of the safety edge beyond the roadway pavement edge.

326.13 PAYMENT:

The asphalt concrete measured as provided above will be paid for at the contract price per ton or square yard, as adjusted per Section 326.10, which price shall be full compensation for the item complete, as herein described and specified.

Payment for tack coat will be by the ton diluted, based on the rate of application, as directed by the Engineer.

No payment will be made for any overrun in quantity of asphalt concrete in excess of 10 percent for newly constructed pavement having a total thickness equal to or greater than 2.5 inches. The overrun quantity is excess tonnage above the tonnage calculated based on actual field measurement of area covered, design thickness, and the mix design unit weight. The calculations for overrun will be by individual pay item. To compensate or adjust for a thickness deficiency in an underlying asphalt concrete course, the Engineer may authorize a quantity increase in excess of 10 percent for a subsequent asphalt concrete course. In such cases, the quantity in excess of 10 percent will be paid for at the lowest unit price.

Removal of raised pavement markers, pavement repars, and surface pavement replacments required prior to roadway overlay operations will be paid for by other pay items unless otherwise specified. Except as otherwise specified, no separate payment will be made for work necessary to construct thickened edges, safety edges, or other miscellaneous items or surfaces of asphalt concrete.

Payment for safety edge preparation will be at the contract unit price for the quantities measured as described above.

-End of Section-

MARICOPA COUNTY
Department of Transportation

MEMORANDUM

Date: May 10, 2016 Revised 2016-08-03

To: MAG Specifications and Details Committee

From: Robert Herz, MCDOT Representative

Subject: Update to Section 309 Lime Stabilization or Modification of Subgrade **Case 16-11**

PURPOSE: Eliminate reference to AASHTO T-26 which has been discontinued. This adjustment only affects Section 309.2 MATERIALS and Section 309.3 COMPOSITION.

REVISION:

309.2 MATERIALS:

309.2.1 Soil or Subgrade: For lime stabilization applications, the soil or subgrade material used for this work shall consist of materials on the site or imported, and shall be free of roots, sod, weeds and stones larger than 3 inches and have a plasticity index (PI) greater than 10, when tested in accordance with AASHTO T-146 Method A, AASHTO T-89 Method A, and T-90. For lime modification applications, the allowable soil or subgrade properties will be determined by the Engineer.

309.2.2 Quicklime and Hydrated Lime: Lime used shall be either quicklime or hydrated lime and shall conform to the requirements of ASTM C977. All lime shall come from a single source. If a source change is requested, a new mix design shall be submitted using lime from the proposed new source. The new design must be approved by the Engineer prior to use.

309.2.3 Lime Slurry: Lime slurry shall be a pumpable suspension of solids in water. The solids portion of the mixture, when considered on the basis of solids content, shall consist principally of hydrated lime of a quality and fineness sufficient to meet Section 309.2.2 requirements. A certificate of compliance shall be provided to the Engineer for each load of lime applied at the project.

309.2.4 Water: Water used for mixing or curing shall be reasonably clean and free of oil, salt, acid, alkali, sugar, vegetable, or other substances injurious to the finished product. The pH (hydrogen ion concentration) of water to be used during construction for mixing or curing shall be within the range of 6.0 to 8.5. The procedure for determining pH values shall be based on the test apparatus used, the test apparatus may use either an electrometric or colorimetric method. The testing procedure shall be in accordance with the methods and instructions furnished by the manufacturer of the apparatus. ~~Water shall be tested in accordance with and shall meet the suggested requirements of AASHTO T-26.~~ Water known to be of potable quality may be used without testing.

309.3 COMPOSITION:

309.3.1 Lime Stabilization Mix Design: Before commencing lime treatment work, the Contractor shall submit for approval by the Engineer, a proposed mix design. The proposed mix design shall be prepared by a testing laboratory under the direction and control of an Arizona registered professional engineer. The mix design shall be determined using the soils or subgrade material to be stabilized, water from the source to be used during construction, and lime from the proposed supplier.~~, and shall determine the following:~~ The mix design shall identify the water source to be used during construction and, if not from a potable source, the water's pH value.

2901 West Durango Street Phoenix, Arizona 85009 Phone: 602-506-4760 Fax: 602-506-5969

For soil stabilization applications, the mix design shall report and comply with the following requirements:

Untreated Soil:

(a) Sulfates: Tested per ARIZ 733, AASHTO T-290, or ASTM C1580.
(b) Moisture-Density Relationship (Proctor): Tested per ASTM D698 Method A.
(c) Plasticity Index: Test method AASHTO T-146 Method A, AASHTO T-89 Method A, and T-90.
(d) Sieve Analysis and Minus No. 200 Wash: Test methods ASTM C136 and ASTM D1140.

Lime Treated Soil:

(a) pH: Lime saturation content per ASTM C977 APPENDIX or ASTM D6276.
(b) Plasticity Index: Less than 3, per AASHTO T-146 Method A, AASHTO T-89 Method A, and T-90.
(c) Swell Potential: Maximum expansive potential of 1.0 per ARIZ 249 using passing No. 4 sieve material. The maximum expansive potential shall be determined on a sample compacted to approximately 95 percent of the ASTM D698 Method A maximum dry density at approximately 2% below optimum moisture content. The sample should be confined under a 100 psf surcharge and inundated.
(d) Unconfined Compressive Strength: Minimum 160 psi per ASTM D5102 Procedure A, after five days curing at 100°F, sealed in air-tight condition.
(e) Mellowing time and mellowing moisture content for treated soil sections b and c to be determined by design engineer. Mellowing time and mellowing moisture content for treated soil section d determined by ASTM D5102.
(f) Hydrated Lime Content: The design engineer shall designate the minimum percentage of lime by dry weight of the dry soil to satisfy the criteria for Section 309.3.2 requirements. The percentage of lime specified shall be sufficient to allow for expected variations during the mixing process. A minimum of 5.0% hydrated lime by dry weight of the dry soil is required for all mix designs.

309.3.2 Lime Modification: For soil modification purposes only, the Engineer shall specify the minimum amount of hydrated lime or lime slurry required to meet the desired improved soil properties.

309.4 CONSTRUCTION: *<No Changes>*

Chandler • Arizona
Where Values Make The Difference

MEMORANDUM **Case # 16-14**

DATE: September 7, 2016

TO: MAG Specifications and Details Committee Members

FROM: Warren White, City of Chandler Representative

SUBJECT: Proposed Revisions to Water Meter Box and Cover Details

Purpose: Revise water meter box and cover detail no's 310-314 and 320 based on current practice and agency needs. Remove cast iron covers.

Revisions (update):

Detail No. 310 Steel Water Meter Box Cover

- Added paint requirements to note no. 2, oil based alkali resin per Section 790.
- Added note no. 6, refer to Detail 320 for vertical load rating.
- Other minor revisions to notes and text for consistency.

Detail No. 315 Polymer Concrete Water Meter Box Cover

- Added note no. 4 and 5 for consistency with other details.
- Added note no. 6, refer to Detail 320 for vertical load rating.
- Other minor revisions to notes and text for consistency.

Detail No. 320 Water Meter Boxes

- Revised note no. 2 to include polyethylene with polymer concrete frame as an acceptable alternative material. Meets stated vertical loading requirements.
- Revised note no. 3 adding the appropriate ANSI/SCTE77 testing standard and setting Tier 5 as minimum vertical load rating.
- Revised note no. 4 - - load requirements above 5000 pounds to use traffic rated box and cover (Detail 319). Consistent with Tier 5 load rating.
- Other minor revisions to notes and text for consistency.

DRAFT
8-22-2016

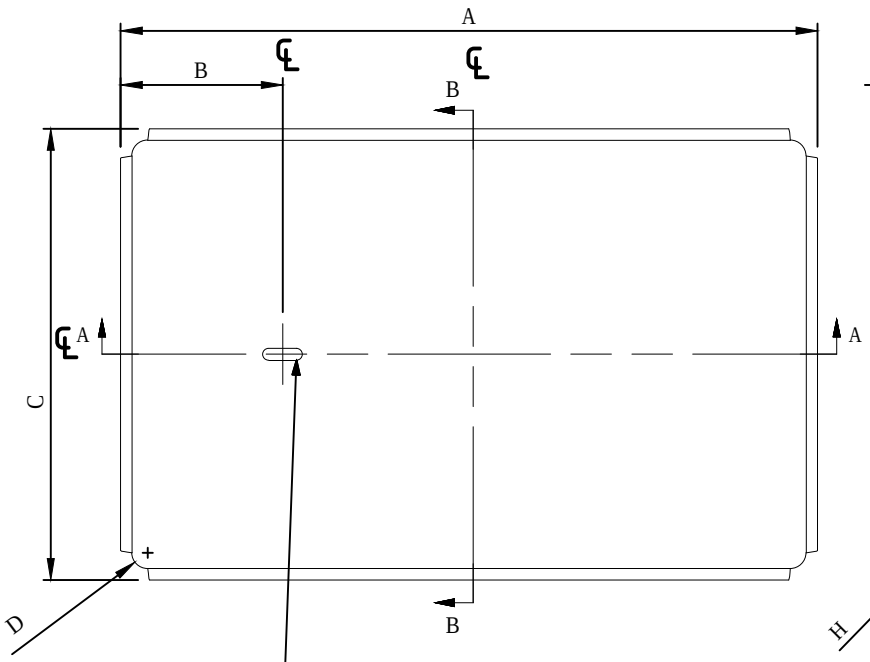

PLAN VIEW

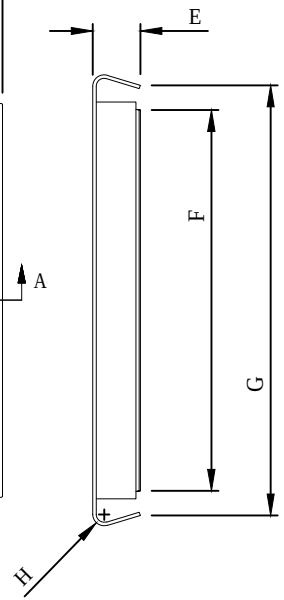

SECTION B-B

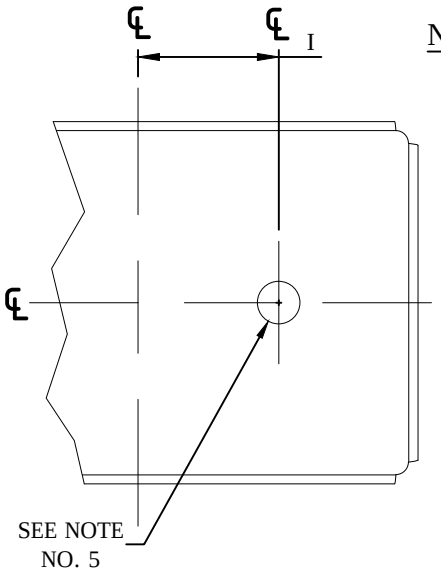

AMR DETAIL OPTION

NOTES:

1. STEEL COVER MATERIAL TO BE PER ASTM A786
2. POTABLE WATER COVER PAINTED BLACK AND RECLAIMED WATER COVER PAINTED PANTONE PURPLE 512. USE OIL BASED PAINT ALKALI RESIN PER SECTION 790
3. DIMENSIONS SHOWN SHALL NOT VARY MORE THAN A 1/16 OF AN INCH
4. ALL COVERS MADE OUT OF DIAMOND CHECKER PLATE
5. STANDARD AUTOMATIC METER READER (AMR) HOLE 2" PER AGENCY OR STANDARD SPECIFICATION
6. REFER TO DETAIL 320 FOR VERTICAL LOAD RATING

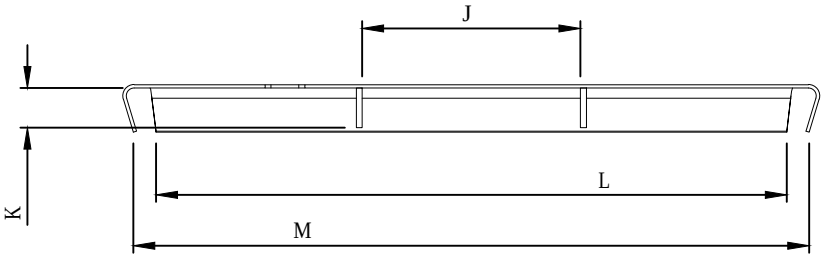

SECTION A-A

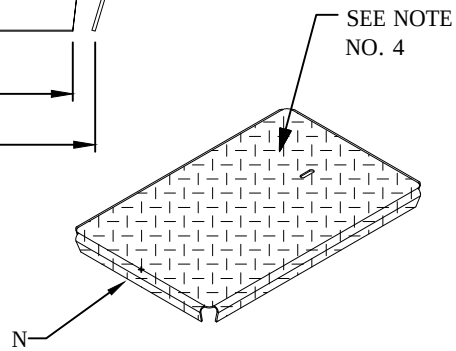

STEEL WATER METER COVER DIMENSIONS				
DIMS	COVER NUMBER			
	1	2	3	4
A	15–3/4”	21–7/8”	26”	30–3/8”
B	3–7/8”	4–1/2”	2–1/8”	4–5/8”
C	9”	14”	15”	19–1/2”
D	1/2”	1/2”	1/2”	1/2”
E	1–1/2”	1–1/2”	2–1/4”	1–1/2”
F	7–1/8”	12”	13”	17–3/4”
G	8–1/4”	13–12”	14–1/8”	19–1/4”
H	1/8”	1/4”	1/8”	1/4”
I	3–3/4”	6–5/8”	9”	12–1/4”
J	NA	6–7/8”	8–1/2”	7–3/8”
K	NA	1–1/4”	1–1/4”	1–1/4”
L	13–7/8”	19–7/8”	24”	28–1/8”
M	15”	21–1/4”	25–1/8”	29–3/4”
N	14 GAUGE	12 GAUGE	12 GAUGE	12 GAUGE

DETAIL NO.				REVISED	DETAIL NO.
310	MARICOPA ASSOCIATION of GOVERNMENTS	STANDARD DETAIL ENGLISH	STEEL WATER METER BOX COVER	1–1–2017	310

DRAFT
8-22-2016

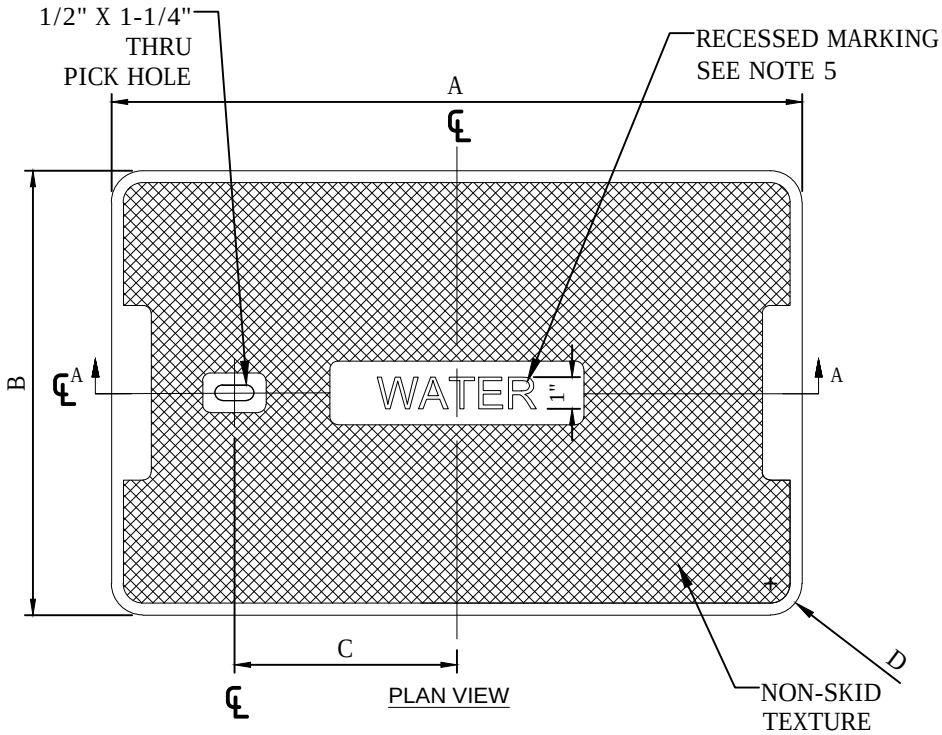

PLAN VIEW

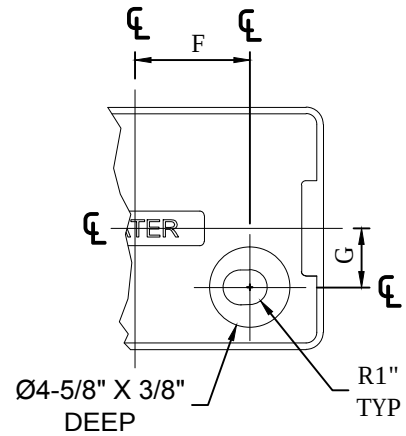

SLOTTED AMR
DETAIL OPTION

NOTES:

1. POTABLE WATER COVER TINTED GRAY AND RECLAIMED WATER COVER TINTED PANTONE PURPLE 512
2. DIMENSIONS SHOWN SHALL NOT VARY MORE THAN A 1/16 OF AN INCH
3. ACCEPTABLE ALTERNATIVES INCLUDE "SHEET MOLDED COMPOUND" (SMC), AND "BULK MOLDED COMPOUND" (BMC). PLASTICS ARE NOT ACCEPTABLE MATERIALS
4. SLOTTED AUTOMATIC METER READING (AMR) HOLE PER AGENCY OR STANDARD SPECIFICATION
5. MARKING PER AGENCY AND/OR UTILITY
6. REFER TO DETAIL 320 FOR VERTICAL LOAD RATING

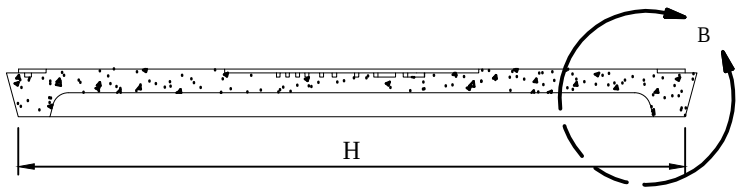

SECTION A-A

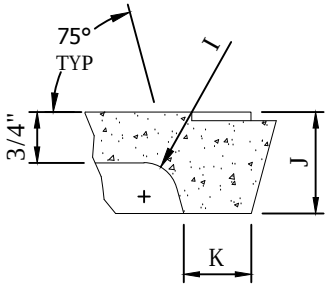

DETAIL B

POLYMER CONCRETE COVER DIMENSIONS				
DIMS	COVER NUMBER			
	1	2	3	4
A	15–3/4”	21–7/8”	26”	30–3/8”
B	9”	14”	15”	19–1/2”
C	5”	7”	9”	10”
D	3/4”	1”	3/8”	3/8”
E	8–1/2”	13–1/4”	14–1/8”	19”
F	4–3/8”	6–5/8”	8”	10–3/4”
G	3/4”	3–3/8”	3–3/4”	6–1/4”
H	15–3/8”	21”	25–1/8”	29–1/2”
I	3/8”	1/2”	1”	1/4”
J	1–1/2”	1–1/2”	2–1/4”	1–1/2”
K	3/4”	1”	1”	1”

DETAIL NO.				REVISED	DETAIL NO.
315	MARICOPA ASSOCIATION of GOVERNMENTS	STANDARD DETAIL ENGLISH	POLYMER CONCRETE WATER METER BOX COVER	1–1–2017	315

DRAFT
8–22–2016

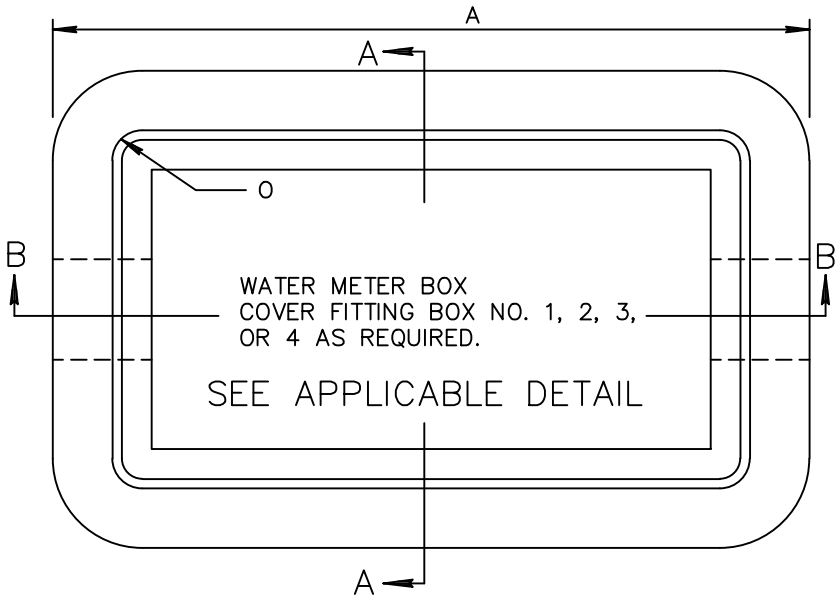

PLAN VIEW

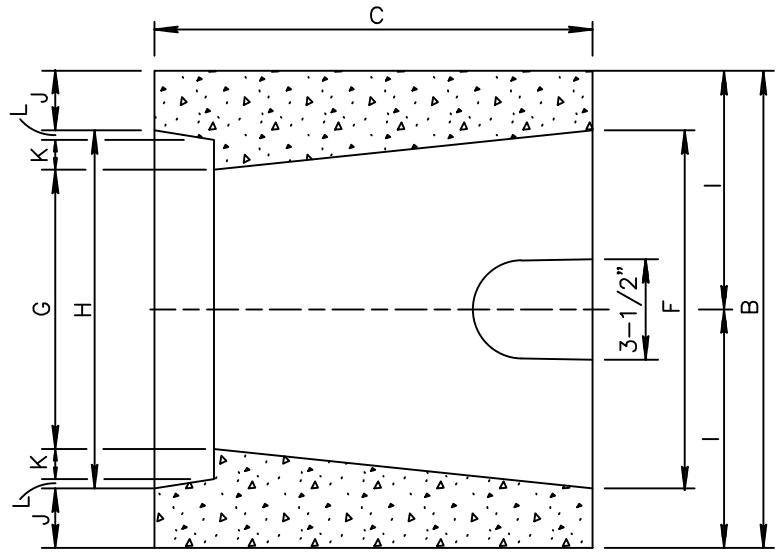

SECTION A–A

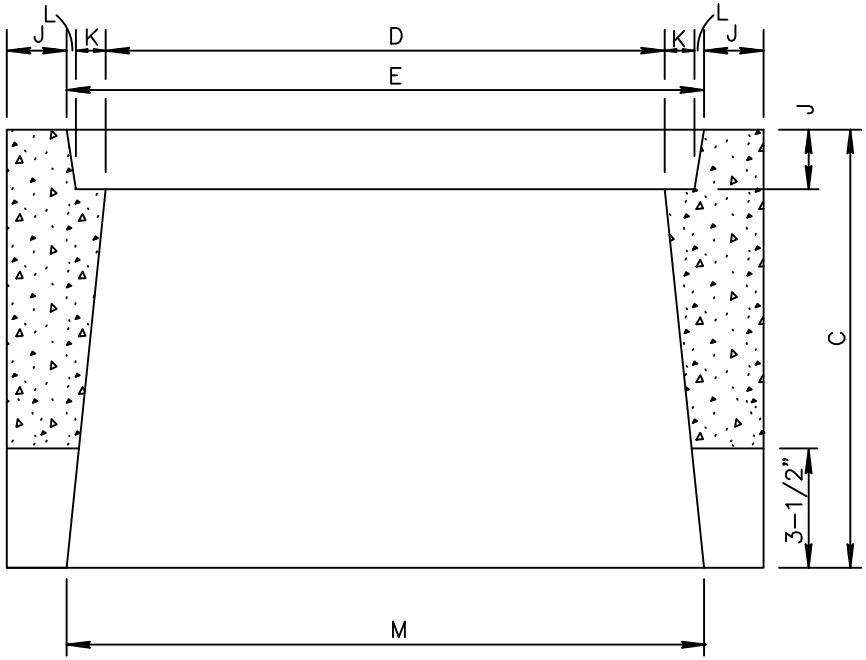

SECTION B–B

NOTES:

1. THE METER BOXES SHALL CONFORM TO DIMENSIONS AS SHOWN AND SHALL NOT VARY MORE THAN A 1/16 OF AN INCH
2. THE METER BOXES SHALL BE MADE OF CLASS 'AA' CONCRETE PER SECT. 725. ACCEPTABLE ALTERNATIVE MATERIALS INCLUDE "POLYMER CONCRETE", "SHEET MOLDED COMPOUND" (SMC), "BULK MOLDED COMPOUND" (BMC), AND POLYETHYLENE WITH POLYMER CONCRETE FRAME
3. MINIMUM VERTICAL LOAD RATING PER TIER 5 ANSI/SCTE77 TESTING STANDARD FOR GRADE LEVEL ENCLOSURES AND COVERS
4. FOR LOAD REQUIREMENTS ABOVE 5,000 POUNDS USE DETAIL 319, TRAFFIC RATED BOX AND COVER

METER BOX DIMENSIONS

DIMS	BOX NUMBER			
	1	2	3	4
A	18–1/2"	25"	28–3/8"	33–1/8"
B	11–3/4"	17–1/4"	17–5/8"	22–3/8"
C	12"	12"	12"	12"
D	14"	20"	24"	27–3/4"
E	16"	22–1/8"	26–1/4"	30–5/8"
F	9–1/4"	14–1/2"	15–1/8"	19–3/4"
G	7"	12–1/2"	13"	17"
H	9–1/4"	14–1/4"	15–1/4"	19–3/4"
I	5–7/8"	8–5/8"	8–7/8"	11–1/8"
J	1–1/2"	1–1/2"	2–1/4"	1–1/2"
K	3/4"	1/2"	3/4"	5/8"
L	1/4"	1/2"	1/2"	5/8"
M	16"	21–7/8"	26"	30–1/2"
O	1/2"	1/2"	1/2"	5/8"
	5/8" OR 3/4" METER	1" METER	1–1/2" METER	2" METER

DETAIL NO.				REVISED	DETAIL NO.
320	MARICOPA ASSOCIATION of GOVERNMENTS	STANDARD DETAIL ENGLISH	NON TRAFFIC RATED WATER METER BOXES	1–1–2017	320

Chandler • Arizona
Where Values Make The Difference

MEMORANDUM **Case # 16-15**

DATE: September 7, 2016

TO: MAG Specifications and Details Committee Members

FROM: Warren White, City of Chandler Representative

SUBJECT: Proposed Addition of Traffic Rated Box and Cover Detail No. 319

Purpose: Need for box that can withstand continuous traffic

Revisions (update):

- Minor revisions to notes and text for consistency.

DRAFT
8-22-2016

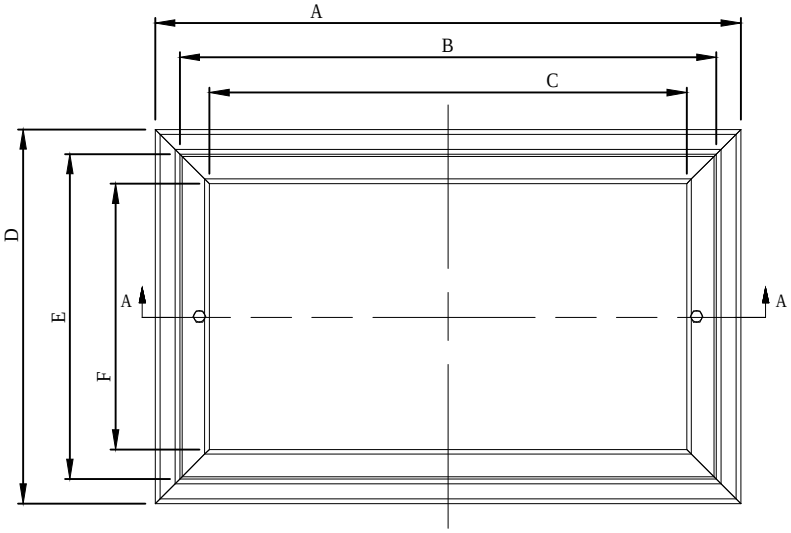

BOX ONLY - TOP VIEW

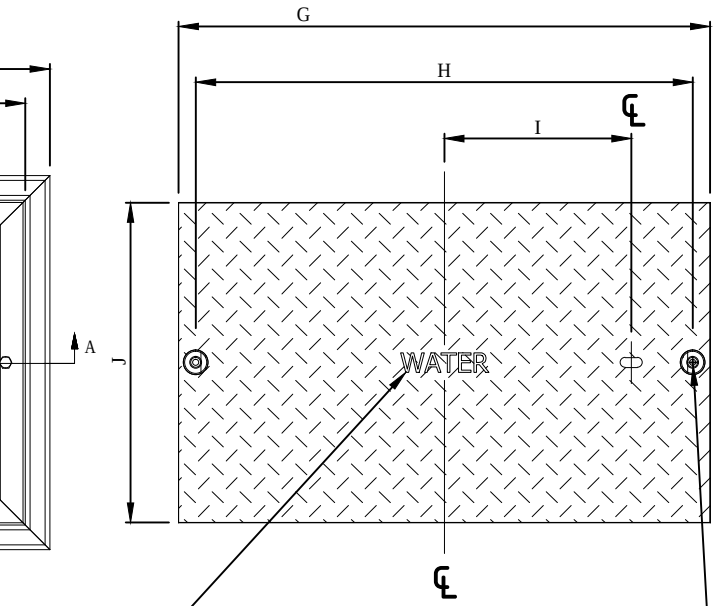

COVER ONLY - TOP VIEW

NOTES:

1. COVER AND BOX COMBINATION SHALL MEET AASHTO H20
2. DIMENSIONS SHOWN SHALL NOT VARY MORE THAN A 1/16 OF AN INCH
3. MARKINGS PER AGENCY AND/OR UTILITY
4. STACKABLE EXTENSION AVAILABLE TO ACHIEVE DEPTH DESIRED
5. GROUND BELOW THE BOX TO BE COMPACTED TO 95% MAXIMUM DENSITY
6. 6" CONCRETE COLLAR IF REQUIRED BY AGENCY

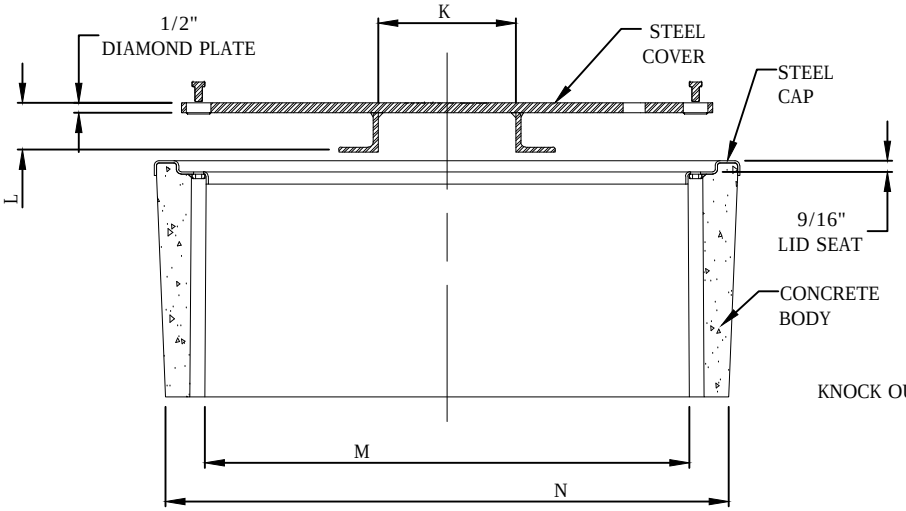

SECTION A-A BODY AND COVER

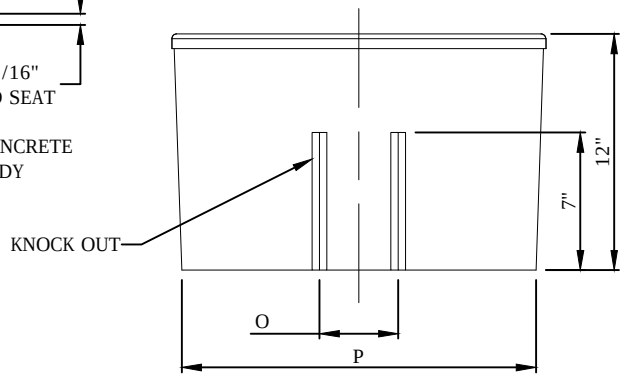

END VIEW

TRAFFIC BOX DIMENSIONS		
DIMS	BOX NUMBER	
	(1324)	(1730)
A	29–3/4"	36–7/8"
B	27–1/4"	33–1/2"
C	24–1/4"	30"
D	19"	23–3/4"
E	16–1/2"	20–1/2"
F	13–1/2"	17"
G	27"	33–1/4"
H	25–1/4"	31–1/4"
I	9–1/2"	12–1/8"
J	16–1/4"	20–1/4"
K	7"	10–3/4"
L	2–1/2"	3–1/2"
M	24–5/8"	30–5/8"
N	28–5/8"	35–7/8"
O	4"	5–3/4"
P	18"	22–5/8"

DETAIL NO.				REVISED	DETAIL NO.
319	MARICOPA ASSOCIATION of GOVERNMENTS	STANDARD DETAIL ENGLISH	TRAFFIC RATED BOX AND COVER	1–1–2017	319

SECTION 717 Case 16-16 7/21/2016

ASPHALT-RUBBER ASPHALT CONCRETE

717.1 DESCRIPTION:

The work under this section shall consist of furnishing, proportioning and mixing all the ingredients necessary to produce an A~~a~~sphalt-R~~r~~ubber Asphalt Concrete (ARAC) material. ARAC mixes may be used for low or high traffic conditions, as determined by the agency. Low traffic conditions are conditions where the asphalt mix will be subject to low volume and low weight vehicle usage. Examples of this condition are residential streets, most parking lots and residential minor collector streets. High traffic conditions are conditions where the asphalt mix will be subject to high volume and/or heavy weight vehicle usage as found on major collector, arterial and commercial streets. Street classifications (i.e. minor collector and major collector) shall be determined by the specifying agency.

717.2 MATERIALS:

717.2.1 Asphalt-Rubber Binder (ARB): The blended ARB shall meet the criteria list below. The ARB may be blended in a dedicated blending and storage unit connected to the hot plant or at the asphalt binder supplier's facility.

717.2.1.1 Asphalt Cement: Asphalt cement shall conform to the requirements of Section 711.

717.2.1.2 Crumb Rubber: Crumb Rubber shall meet the gradation requirements as shown in Table 717-1 below when tested in accordance with Arizona Test Method 714.

TABLE 717-1	
GRADATION REQUIREMENTS OF CRUMB RUBBER	
Sieve Size	**Percent Passing**
2.00 mm (#10)	100
1.18 mm (#16)	65 - 100
600 µm (#30)	20 - 100
300 µm (#50)	0 - 45
75 µm (#200)	0 - 5

The crumb rubber shall have a specific gravity of 1.15 ± 0.05 and shall be free of wire or other contaminating materials, and shall contain not more than 0.5 percent fabric. Calcium carbonate, up to four percent by weight of the crumb rubber, may be added to prevent the particles from sticking together.

Certificates of Compliance conforming to Arizona State Department of Transportation Standard Specifications for Road and Bridge Construction Section 106.05 shall be submitted. In addition, the Certificates shall confirm that the rubber is a crumb rubber, derived from processing at ambient temperature, whole scrap tires or shredded tire materials; and the tires from which the crumb rubber is produced is taken from automobiles, trucks, or other equipment owned and operated in the United States. The Certificates shall also verify that the processing does not produce, as a waste product, casings or other round tire material that can hold water when stored or disposed of above the ground. The crumb rubber to be used in ARB shall be the type produced through a process of mechanical grinding at ambient temperature. Use of crumb rubber granules produced from a cryogenic process is prohibited.

717.2.1.3 ARB Proportions and Properties: Ground crumb rubber in ARB shall be a minimum of 18 percent by weight of total binder.

ARB shall be Type 1 unless otherwise specified and conform to the requirements of Table 717-2.

TABLE 717-2			
PHYSICAL PROPERTIES OF ARB			
Property	Requirement		
	Type 1	Type 2	Type 3
Grade of base asphalt cement	PG 64-16	PG 58-22	PG 52-28
Rotational Viscosity*; 350° F, Pascal seconds	1.5-4.0	1.5-4.0	1.5-4.0
Penetration; 39° F (4° C), 200g, 60 sec. (ASTM D5); dmm, min	10	15	25
Softening Point; (ASTM D36); °F, min.	135	130	125
Resilience; 77°F (ASTM D5329); %, min	25	20	15
* The Viscometer used must be a hand held rotational viscometer, such as a Rion (formerly Haake) Model VT – 04, or an equivalent, using Rotor No. 1. The rotor, while in the off position, shall be completely immersed in the binder at a temperature from 350° to 355° F for a minimum heat equilibrium period of 60 seconds, and an average viscosity determined from three separate constant readings (± 0.5 pascal-seconds) taken within a 30 second time frame with the viscotester level during testing and turned off between readings. Continuous rotation of the rotor may cause thinning of the material immediately in contact with the rotor, resulting in erroneous results.			

717.2.1.4 ARB Design: At least two weeks prior to paving, the Contractor shall submit an ARB design prepared by an ADOT approved laboratory. Such design shall meet the requirements specified herein. The design shall show the values obtained from the required tests, along with the following information: percent, grade and source of the asphalt cement used; and percent, gradation and source(s) of the crumb rubber used, as well as the ARB blending location: on-site or at the asphalt binder supplier's facility.

717.2.2 Aggregate: Coarse and fine aggregates shall conform to the applicable requirements of Tables 717-3 and 717-4 below. Coarse mineral aggregate shall consist of crushed gravel, crushed rock, or other approved inert material with similar characteristics, or a combination thereof, conforming to the requirements of these specifications.

Coarse aggregate is material retained above the Number 8 sieve and fine aggregate is material passing the Number 8 sieve. Aggregates shall be free of deleterious materials, clay balls, and adhering films or other material that prevent thorough coating with the asphalt cement. Mineral aggregate shall conform to the following requirements when tested in accordance with the applicable test methods.

TABLE 717-3		
MIX DESIGN GRADATION REQUIREMENTS WITH MINERAL ADMIXTURE		
Overlay Thickness	1" & 1- ½"	2"
Sieve Size	Percent Passing	Percent Passing
1" (25 mm)	100	100
¾" (19 mm)	100	95-100
½" (12.5 mm)	95-100	78-92
⅜" (9.5 mm)	78-92	61-75
No. 4 (4.75 mm)	28-45	30-40
No. 8 (2.36 mm)	15-25	15-25
No. 30 (600 µm)	5-15	5-15
No. 200 (75 µm)	3.0-7.0	2.0-6.0

The combined aggregate properties shall conform to the requirements of Table 717-4.

TABLE 717-4		
COARSE/FINE AGGREGATE REQUIREMENTS		
Characteristics	**Test Method**	**Requirements**
Fractured Faces, % (Plus No. 8)	ARIZ-212	85, 1 fracture 80, 2 or more
Uncompacted Voids, %	ARIZ-247	45.0 (High Traffic Volume) 42.0 (Low Traffic Volume)
Sand Equivalent (Minus No. 4)	AASHTO T-176	65 minimum
Plasticity Index	AASHTO T-89 & T-90	Non Plastic
L.A. Abrasion, % Loss	AASHTO T-96	9 max. @ 100 Rev. 40 max. @ 500 Rev.
Combined Bulk Specific Gravity	AI MS-2	2.35-2.85
Combined Water Absorption, %	AI MS-2	0-2.5

717.2.3 Mineral Admixture: Mineral admixture used in ARAC shall be dry hydrated lime conforming to the requirements of ASTM C1097 or Portland cement conforming to ASTM C150 for Type II, or ASTM C595 for Type IP. The minimum mineral admixture content will be 1.0percent, by weight of total aggregate.

717.3 MIX DESIGN REQUIREMENT:

717.3.1 General: The mix design for ARAC shall be prepared by a laboratory that is accredited through the AASHTO Accreditation Program (AAP) in Hot Mix Asphalt Aggregates and Hot Mix Asphalt. The laboratory shall be under the direct supervision of a Civil Engineer, registered by the State of Arizona, and who is listed by ADOT as a "Qualified Asphalt Concrete Mix Design Engineer" within ADOT's list of approved laboratories.

The date of the design shall not be older than two years from the date of submittal, unless supportive documentation is provided and approved by the Engineer.

The mix design method used shall be in accordance with the Marshall Mix procedure, 75 blows, as described in Arizona Test Method 832 "Marshall Mix Design Method for Asphaltic Concrete (Asphalt Rubber) [AR-AC]" with the exceptions that:

(1) Mineral admixture shall be considered part of the total weight of aggregate and all combined specific gravity and combined absorption calculations for aggregates and mineral admixture will be done in accordance with Asphalt Institute's Manual MS-2.

(2) Course aggregate shall be separated from the fine aggregate on the #8 sieve.

Mix designs are subject to approval by the Engineer.

717.3.2 Mix Design Criteria: The mix shall comply with the criteria in Table 717-5.

TABLE 717-5		
MARSHALL MIX DESIGN CRITERIA		
Criteria	Low Volume Traffic	High Volume Traffic
ARB Content 1" and 1-1/2" Overlay Thickness 2" Overlay Thickness	 8.4% minimum N/A	 8.0% minimum 7.0% minimum
Mixture Air Voids, %	3.5-4.5	4.5-5.5
Voids in Mineral Aggregate, %	19.0 min	19.0 min
Tensile Strength Ratio, ASTM D 4867~~AASHTO T-283~~	65% minimum	65% minimum
Marshall Stability, pounds minimum	800	800
Marshall Flow, 0.01 inch minimum	16	16

The mix design report shall include the following elements as a minimum.

(1) The name and address of the testing organization and the person responsible for the mix design report.

(2) The mix plant identification and/or location, as well as the supplier or producer name.
(3) The traffic condition (low or high traffic) and lift thickness.

(4) A description of all products that are incorporated in the ARAC along with the sources of all products, including the base asphalt cement, crumb rubber, mineral aggregate, and admixtures.

(5) The results of all testing, determinations, etc., such as: specific gravity and gradation, water absorption, sand equivalent, loss on abrasion, fractured coarse aggregate particles, Tensile Strength Ratio (ASTM D 4867~~AASHTO T-283~~), Marshall bulk density, stability and flow, asphalt absorption, percent air voids, voids in mineral aggregate, and mineral admixture content. Historical abrasion values may be supplied on existing sources. The submittal should include a plot of the gradation on the Federal Highway Administration's 0.45 Power Gradation Chart and plots of the compaction curves.

(6) The laboratory mixing and compaction temperature ranges for the ARB used within the mix design.

(7) A specific recommendation for design ARB content and any limiting conditions that may be associated with the use of the design, such as minimum percentages of crushed or washed fine aggregate.

(8) The supplier's product code, the laboratory Engineer's seal (signed and dated), and the date the design was completed.

(9) The ARB design.

The mix design shall be submitted to the Agency or Engineer by the Contractor/Supplier for which it was developed as part of his project submittals. Once the mix design has been approved by the agency or Engineer, the Contractor and/or his supplier shall not change plants nor utilize additional mixing plants without prior approval of the Engineer. Any changes in the plant operation, the producer's pit, the ARB, or any other item that will cause an adjustment in the mix, shall be justification for a new mix design to be submitted.

- ***End of Section***

Revised 2016

The asphalt concrete produced shall conform to the requirements of the production tolerances established in Section 321.10. When the asphalt concrete does not conform to the production tolerances, it shall be reported to the Engineer, and corrective quality control measures shall be implemented, or production shall cease immediately at no additional cost to the contracting Agency.

Requests for referee testing as described in Section 321.11 will only be considered based on quality control test results performed by a laboratory accredited by the AASHTO Accreditation Program (AAP) for the tests being performed or a laboratory listed in the current ADOT Directory of Approved Materials Testing Laboratories for the set of tests in question. The laboratory shall use properly certified technicians in accordance with ASTM D3666, Section 7 (Personnel Qualifications).

321.10 ACCEPTANCE:

321.10.1 Acceptance Criteria: Asphalt concrete will be divided into lots for the purpose of acceptance. A lot shall be one day's production. Each lot shall be divided into sublots of 500 ton or fraction thereof. Tests used to determine acceptance will be performed by a laboratory accredited by the AASHTO Accreditation Program (AAP) for the tests being performed. The contracting agency shall provide an appropriately accredited laboratory or laboratories to perform the acceptance testing. laboratories shall use properly certified technicians in accordance with ASTM D3666, Section 7 (Personnel Qualifications). The acceptance laboratory will take representative samples of the asphalt concrete from each sublot to allow for testing of gradation, binder content, air voids, pavement thickness, and compaction of base and surface courses. Acceptance of each sublot will be based on the test data from the sample(s) from that sublot. All acceptance samples shall be taken using random locations or times designated by the Engineer in accordance with ASTM D3665. For permit work, testing that does not strictly adhere to the sampling and testing methodology and requirements outlined in this Section shall be disregarded and not considered in any acceptance determination. All required retesting shall be at the expense of the permittee.

321.10.2 Gradation, Binder Content and Air Voids: The acceptance laboratory will take a sample of the asphalt concrete in accordance with the requirements of Section 2 or 4 of Arizona Test Methods 104 or AASHTO T-168 from each sublot. The minimum weight of the sample shall be 45 pounds. Asphalt binder content and gradation shall be determined in accordance with AASHTO T-308 using the ignition furnace for each sublot. The acceptance laboratory is responsible for obtaining the necessary materials and performing an ignition furnace calibration as outlined in AASHTO T-308 for each asphalt concrete mixture utilized on the project. The correction factor used for each test shall be clearly indicated on the report. The bulk density for Marshall Mix designs shall be tested in accordance with AASHTO T-245. The bulk density for Gyratory mix designs shall be determined in accordance with AASHTO T-312. The maximum theoretical density shall be determined in accordance with the requirements of AASHTO T-209 including fan drying per AASHTO T-209 Section 15. Effective voids of the laboratory compacted specimens will be determined at a minimum of once per lot in accordance with the requirements of AASHTO T-269. Should the testing for effective air voids not meet the "Full Payment" or "No Corrective Action" requirements of Table 321-5, additional testing for laboratory air voids on the remaining sublots will be performed as necessary to determine the extent of the deficiency. Acceptance testing results will be furnished to the contractor and the supplier within five working days of receipt of samples by the acceptance laboratory.

During production, the allowable deviations from the mix design gradation targets are listed in the tables below. The allowable production tolerances may fall outside of the mix design gradation bands.

TABLE 321-3A
GRADATION ACCEPTANCE LIMITS FOR MARSHALL MIXES

Sieve Size	3/8 inch Mix	1/2 inch Mix	3/4 inch Mix	Base Mix
1 inch	---	---	---	±7%
3/4 inch	---	---	±7%	±6%
1/2 inch	---	±7%	---	---
3/8 inch	±7%	±6%	±6%	±6%
No. 8	±6%	±6%	±6%	±6%
No. 40	±4%	±4%	±4%	±4%
No. 200	±2%	±2%	±2%	±2%

TABLE 321-8		
PAVEMENT DENSITY PENALTIES		
Limits of In-place Air Voids for design lift thicknesses 1.5 inches and greater	When the contracting agency is the owner Payment Reduction ($ per ton of asphalt concrete)	When the contracting agency is not the owner i.e. permits Corrective Action
Below 3.0%	Removal* or EA	Removal* or EA
3.0% to below 4.0%	$10.00	EA ~~and Type II Slurry~~
4.0% to 8.0%	Full Payment	No Corrective Action
Greater than 8.0% to less than 9.0%	$6.00	EA
9.0% to 10.0%	$10.00	EA and Type II Surry Seal
Greater than 10.0%	Removal* or EA	Removal* or EA

NOTES: *The Contractor shall remove and replace the entire sublot that is deficient.
EA = Engineering Analysis per Section 321.10.6

321.10.6 Engineering Analysis (EA): Within 10 working days after receiving notice that a lot or sublot of asphalt concrete is deficient and is found to fall within the "Removal or EA" band per Table(s) 321-4, 321-5, and/or 321-8 the contractor may submit a written proposal (Engineering Analysis) to accept the material in place at the applicable penalties along with possible remediation(s) listed in the "Removal or EA" category. Engineering Analysis can also be proposed for non-removal categories of "Corrective Actions" when the contracting agency is not the owner (i.e. permits).

The Engineering Analysis shall contain an analysis of the anticipated performance of the asphalt concrete if left in place. The Engineering Analysis shall also detail the effect of any proposed corrective action to the material(s) in place as it relates to the in-place material's performance. The Engineering Analysis shall be performed by a professional engineer experienced in asphalt concrete testing and mix designs.

If a lot or sublot is accepted for referee testing and the referee test results still show a deficiency, the contractor shall have ten working days to submit an Engineering Analysis beginning upon notification of referee test results.

When an Engineering Analysis recommends that a specific lot or sublot should not be removed, the Engineering Analysis will recommend that the following penalties (Table 321-9) be paid when the contracting agency is the owner, for the specific criteria being reviewed by the EA.

TABLE 321-9		
ENGINEERING ANALYSIS PENALTIES for REMOVAL* LOTS/SUBLOTS LEFT IN-PLACE		
Acceptance Criteria	**Acceptance Limits**	**Penalty When Contracting Agency is the Owner ($/Ton)**
Asphalt Binder Content	Over 0.2% points from that Permitted	$9.00
Laboratory Air Voids (Measured at N_{des} or 75 blows as applicable)	Less than 1.5% or Greater Than 8.0%	$7.50
Limits of In-place Air Voids	Less than 3% or Greater than 10.0%	$15.00

Within 15 working days, the Engineer will determine whether or not to accept the contractor's proposed Engineering

Analysis.

321.11 REFEREE:

If the Contractor has reason to question the validity of any of the acceptance test results, the Contractor may request that the Engineer consider referee test for final acceptance. Any request for referee testing must describe the contractor's reasons for questioning the validity of the original acceptance test results and must clearly describe which set of acceptance tests are in question. The engineer may either accept or reject the request for referee testing. When referee testing is accepted the Contractor (at the Contractors own expense) will engage an independent laboratory accredited by the AAP or a laboratory listed in the current ADOT Directory of Approved Materials Testing Laboratories as appropriate the acceptance tests that are being questioned. The independent referee laboratory shall use properly certified technicians in accordance with ASTM D3666, Section 7 (Personnel Qualifications). For the set of test results in question the referee laboratory shall perform a new set of acceptance tests (as required by Section 321.10 representing the area for the set of tests in question). The referee tests will replace the original acceptance tests that were in question.

For permit work, the permittee, responsible for hiring the testing laboratory, whose results necessitate referee testing, shall bear all expenses in the additional testing (i.e. secondary and the referee testing) if the original results are not substantiated by the referee testing procedure outlined in this Section. Additionally, any testing performed that does not strictly ahere to the sampling and testing methodology and requirements in Section 321.10 shall be disregarded and not allowed in any acceptance determination. Disregarded tests will be re-performed at the expense of the permittee.

These tests may include asphalt binder content, aggregate gradation, Marshall or Gyratory unit weight, maximum theoretical unit weight, laboratory air voids and in-place air voids (compaction). Samples for referee testing shall come from representative samples obtained from the completed pavement, as directed by the Engineer.

The number of samples taken will be the same as specified in Section 321.10. The independent laboratory shall compile the test results and transmit them to both the Engineer and the contractor. The independent laboratory shall include a report sealed and signed by an Engineer registered in the State of Arizona, who is experienced in asphalt concrete testing and mix design development. The signed report shall give an opinion that the material evaluated does or does not comply with project specifications, shall clearly describe any deficiencies, and the results will be binding between all parties.

321.12 MEASUREMENT:

Asphalt concrete pavement will be measured by the ton, or by the square yard, for the mixture actually used as allowed above, which shall include the required quantities of mineral aggregates, asphalt binder, and mineral admixture. Measurement shall include any tonnage used to construct intersections, roadways, streets, or other miscellaneous surfaces indicated on the plans or as directed by the Engineer.

Measurement for safety edge preparation only applies to overlays of existing pavements that require the construction of a safety edge when none exists. Safety edge preparation will be measured by the linear foot. Safety edge preparation will not be measured when a safety edge is part of new pavement construction, pavement widening, or when overlaying an existing pavement that contains a safety edge. The asphalt concrete pavement measurement shall include the tonnage used to construct safety edges or the square yard measurement for asphalt concrete pavement will be increased by the horizontal extension of the safety edge beyond the roadway pavement edge.

321.13 PAYMENT:

The asphalt concrete measured as provided above will be paid for at the contract price per ton or square yard, as adjusted per Section 321.10, which price shall be full compensation for the item complete, as herein described and specified.

Payment for tack coat will be by the ton diluted, based on the rate of application, as directed by the Engineer.

No payment will be made for any overrun in quantity of asphalt concrete in excess of 10 percent for newly constructed pavement having a total thickness equal to or greater than 2.5 inches. The overrun quantity is excess tonnage above the tonnage calculated based on actual field measurement of area covered, design thickness, and the mix design unit weight. The calculations for overrun will be by individual pay item. To compensate or adjust for a thickness deficiency in an underlying asphalt concrete course, the Engineer may authorize a quantity increase in excess of 10 percent for a subsequent asphalt concrete course. In such cases, the quantity in excess of 10 percent will be paid for at the lowest unit price.

Removal of raised pavement markers, pavement repars, and surface pavement replacments required prior to roadway overlay operations will be paid for by other pay items unless otherwise specified. Except as otherwise specified, no separate payment will be made for work necessary to construct thickened edges, safety edges, or other miscellaneous items or surfaces of asphalt concrete.

Payment for safety edge preparation will be at the contract unit price for the quantities measured as described above.

321.14 ASPHALT CORE METHOD: Core Drilling of Hot Mix Asphalt (HMA) for Specimens of 4" or 6" diameter

321.14.1 Scope: This method is to establish a consistent method of the use of a diamond bit core to recover specimens of 4 or 6 inch diameter for laboratory analysis and testing. The method will require the use of: water, ice (bagged or other suitable type), dry ice, and a water-soap solution to be utilized when coring asphalt rubber concrete. Individuals doing the specimen recovery should be observing all safety regulations from the equipment manufacturer as well as the required job site safety requirements for actions, and required personal protective equipment. For permit work, testing of cores obtained in a manner that does not strictly adhere to the methodology outlined in this Section shall be disregarded and not considered in any acceptance determination. Retesting shall be at the expense of the permittee.

321.14.2 Core Drilling Device: The core drilling device will be powered by an electrical motor, or by an acceptable gasoline engine. Either device used shall be capable of applying enough effective rotational velocity to secure a drilled specimen. The specimen shall be cored perpendicularly to the surface of pavement, and that the sides of the core are cut in a manner to minimize sample distortion or damage. The machinery utilized for the procedure shall be on a mounted base, have a geared column and carriage that will permit the application of variable pressure to the core head and carriage throughout the entire drilling operation. The carriage and column apparatus shall be securely attached to the base of the apparatus; and the base will be secured with a mechanical fastener or held in place by the body weight of the operator. The core drilling apparatus shall be equipped with a water spindle to allow water to be introduced inside of the drill stem while operating. The cutting edge of the core drill bit shall be of hardened steel or other suitable material with embedded diamond chips in the cutting surface. The core barrel shall be of sufficient diameter to secure a specimen that is a minimum of four or six inches or whichever is prescribed for necessary testing. The core barrel shall not be missing more than one of the teeth used for cutting; if so it shall be discarded and another barrel shall be used. The core barrel shall also be a minimum of two inches longer than the anticipated depth of pavement in accordance with project paving plans.

321.14.3 Accessory Equipment: A sufficient supply of ice and dry ice shall be provided to sufficiently cool the pavement prior to securing the samples from the designated areas in the pavement. The ice should also be used to adjust the temperature of the water used to cool the core bit. A water supply (usually a plastic 35 – 55 gal drum) with sufficient hose to introduce the water into and through the spindle of the coring device by gravity feed. The drum should be white or light in color to minimize excessive thermal heating of the water (*for coring of asphalt rubber cores see Note 1*). At no time shall the water utilized in the coring operation exceed 65 degrees F during the coring operation. Ice shall be utilized to ensure the temperature control of the water being introduced during the cutting operation. An ice chest or other suitably insulated container that can maintain a temperature of less than 70 degrees F shall be used to secure the specimens during transport. The container will be equipped with flat shelving that will support the drilled cores throughout the entire specimen dimension during transport back to the testing facility.

Miscellaneous hand tools to remove the drilled specimen from the drill hole or the core barrel taking great care in not disturbing the specimen more than necessary (refer to fig. 1 in ASTM D5361).

321.14.4 Process: The pavement surface at the time of coring shall not exceed a temperature of 90 degrees F; the pavement shall be conditioned with ice or dry ice to ensure that this requirement is met. Immediately after it has been ensured that the pavement has dropped to the required temperature, core drilling shall begin. The operator will then apply an even and continuous pressure (Note 2) to penetrate through the full depth of the pavement. The operator will concurrently ensure that enough water is moving over the core surface as to adequately remove any and all cuttings that could damage the drilled core. After the pavement thickness has been penetrated the core shall be carefully removed from either the drill hole or the core barrel and be immediately transferred to an ice chest or other suitable container. Each individual core shall be placed on a shelf in the cooler with the exposed side of the specimen facing down, or the "top side" down. If the specimen is a two lift core, the only acceptable means of separating lifts is with a power or other acceptable wet saw type of equipment (conforming to ASTM D5361); however, at no time shall cores be split using a mallet and screwdriver or metal straight edge when being tested for bulk density. Perpendicularity of the specimen shall be checked in the field after the specimen has been extracted from the surface. The core operator shall hold the core up to eye level and place the core top side down in a "speed square" or small carpenters square. The specimen placed in the square shall not depart from perpendicular to the axis more

Curb Ramp Working Group Meeting

Meeting Notes
August 15, 2016

Opening:
The meeting of the Specifications and Details Curb Ramp Working Group was called to order by chair Warren White on August 15, 2016, at 1:00 p.m. in the MAG Cholla Room.

1. Attendance
Bob Herz (MCDOT), Brandon Forrey (Peoria), Cathy Hollow (Tempe), Gordon Tyus (MAG), and Warren White (Chandler)

2. Proposed Revisions to Section 340.5 Measurement
Gordon Tyus said he received a phone call asking why the curb was not measured. Mr. Tyus thought the language may need to be clarified. The group determined to clarify the language so that the outside curb and gutter would be measured, but any curbs pertinent to the ramp, such as at the back of the sidewalk or the curb option next to the ramp be included as part of the ramp unit. Warren White said he would draft the changes.

3. Proposed Revisions to Section 340.3.9 Tolerances
Warren White said the text in the third paragraph would revert back to the ½" allowance per discussion at the committee meeting. The working group members discussed whether to add text on having the slopes take precedence over elevations, but decided it was not necessary, and would be covered by the last paragraph.

4. Dual Ramp Details
There was extensive discussion about the 20' radius dual curb ramp (Detail 236-3). The group determined that in order to keep the ramps and wings within the PC/PT, the curb height would be set at 4" for the 20' radius ramps. For 6" and 7" curbs, an option to ramp down to the 4" curb was shown, effectively making them combination ramps, with a curb at the back of the sidewalk. There was also clarification of several notes on the detail. Bob Herz provided the latest draft of the County's curb ramp details for comparison. The directional 20' radius ramps (Detail 237-3) would also have similar changes applied. The group thought the other details, having previously been reviewed, were in pretty good shape. Mr. White said he would redraft the 20' diameter ramps as discussed and distribute for review, with plans to have final versions ready for a vote at the next committee meeting.

5. Adjournment
The meeting was adjourned at 3:20 p.m.

Water/Sewer Working Group Meeting

Meeting Notes
August 16, 2016

Opening:
A meeting of the Specifications and Details Water/Sewer Working Group was called to order by chair Jim Badowich on August 16, 2016, at 1:35 p.m. in the MAG Cholla Room.

1. Introductions/Attendance
David Allred (Avondale), Tony Ayala (Avondale), Jim Badowich (Avondale), Chris Considine (Oldcastle), Jami Erickson (Phoenix), Bob Herz (MCDOT), Troy McGahey (New Horizon Sales), Craig Sharp (Buckeye), Brian Sitarz (Oldcastle), Raffi Soghomonian (Armorcast), Gordon Tyus (MAG), Arvid Veidmark (SSC Boring), Kenny Watkins, Chad Wilson (Sunbelts), and Warren White (Chandler).

2. Case 16-08: Valve Stem Extension Sleeve
Craig Sharp provided handouts of the latest version based on feedback from Maricopa County and went through each detail. There were comments on labeling the paved and unpaved sides, and why they were shown as opposites Mr. Sharp would make any final revisions with plans to vote at the next committee meeting.

4. Case 16-14 and 16-15: Meter Boxes/Covers
Warren White provided updates to Details 310, 315 and 320 for Case 16-14 (Revisions to Water Meter Box and Cover Details) and to Detail 319 for Case 16-15 (traffic-rated boxes and covers). On Detail 320 Note #1 was combine with Note #5. It was further reworded to clarify what types of materials were acceptable and adding a polyethylene box with a polymer concrete frame as an option to allow the type of boxes manufactured by Armorcast. The group did not want any plastic exposed to UV rays. It was also decided to require traffic rated boxes for any loads greater than 5,000 lbs. This is based on the Tier 5 rating of the pedestrian boxes. On Detail 310, Mr. Herz suggested adding centerline symbols. Specifying a paint type (Section 790) in Note #2 was also suggested. On Detail 315, there was discussion on whether to change the text height, since the text itself may change. There were no comments on the traffic rated box Detail 319. Raffi Soghomonian of Armorcast had revised details of their boxes, redesigned to meet MAG standards. Mr. Badowich said his did not need to be submitted to MAG as long as the requirements matched. Mr. White said he would work with Mr. Sitarz to make final revisions to the drawings, and plans to vote and the next meeting.

5. Section 611: Water/Sewer Testing
David Allred of Avondale said he was working on a draft and should have one ready for next year. Mr. Badowich said it should take into account AWWA standards. Craig Sharp said he had a copy of the AWWA disinfection specs. Jim Badowich also questioned the practicality of testing short pieces of pipe

6. Extra Protection/Reclaimed Water
Mr. Badowich said this was another area for next year. He wanted to investigate the use of sleeving and commented on the problems they had with ductile iron pipe, and on the difficulty of encasing pipe in concrete.

7. Other Issues
Other possible items for discussion next year included drop connections, and other methods for keeping valve box covers from popping out, such as locks.

8. Polyethylene Adjusting Rings
Chad Wilson of Sunbelts provided a short presentation and illustration of polyethylene adjustment rings for manhole adjustments. He said they were durable, meeting H25 load rating and SH95 impact rating, were water/air tight, and less likely to break than concrete adjustment rings. There are also variable thickness rings (3/4" to 2") that allow an easy way to make adjustments to meet the roadway slope. He said they can also be sanded and treated with spray insecticides.

9. Next Meeting
The next meeting is tentatively scheduled for 1:30 p.m. on Tuesday, September 20th depending on the outcomes at the next MAG committee meeting.

10. Adjournment
The meeting was adjourned at 3:35 p.m.

MAG Asphalt & Materials Working Groups

Meeting Notes

Thursday, August 18, 2016, 12:00 pm at the ARPA Offices

Present:

See attached attendance sheet. Brian Gallimore & Greg Groneberg chaired this portion of the meeting.

Discussion:

1) Case 16-10 - Proposed New MAG Sections 719 & 326 (proposed)
   Made changes to Sections per comments. Changes will be distributed for any additional comments before sending to MAG for packet inclusion.

2) Case 16-17 – Section 321 – Permittee language in Acceptance, Referee & Coring
   Made changes to Sections per comments. Changes will be distributed for any additional comments before sending to MAG for packet inclusion.

3) Section 310 will have the rock correction brought forth as case at the January meeting.

Date for Next Meeting

The next meeting is *tentatively* scheduled for **January 19, 2017 @ 12:00 pm** in the ARPA offices.

Anyone who wishes to attend is welcome

MAG Working Group

Thursday, August 18, 2016

Company Name	Name	E-mail Address	Signature
Alon Asphalt	Mo Rahman	mo.rahman@alonusa.com	
AMEC Foster Wheeler	Scott Thompson	scott.thompson@amecfw.com	
AMEC Foster Wheeler	Bob Kostelny	robert.kostelny@amecfw.com	
City of Goodyear	Rob Godwin	rob.godwin@goodyearaz.gov	
City of Peoria	Scott Clark	scott.clark@peoriaaz.com	
City of Phoenix	Rob Duvall	robert.duvall@phoenix.gov	
City of Phoenix	Peter Rupal	peter.rupal@phoenix.gov	
City of Scottsdale	Rod Ramos	rramos@scottsdaleaz.gov	
Cutler Repaving	Bob Erdman	berdman@cutlerrepaving.com	
Desert Ready Mix	Manny Mungaray	manny@desertrm.com	
DGA	Peter Kandaris	pkandaris@digioiagray.com	
Drake	John McClafferty	jmcclafferty@drakeus.com	
Fisher Industries	Doug Laquey	dlaquey@fisherind.com	
Fisher Sand & Gravel	Trey Billingsley	tbillingsley@fisherind.com	
Gilbert AZ	Toby Crooks	toby.crooks@gilbertaz.gov	
Gilbert AZ	Chance Baldwin	chance.baldwin@gilbertaz.gov	
Hanson	Brian Newman	brian.newman@hanson.com	
HollyFrontier	Brad Schmitz	bradley.schmitz@hollyfrontier.com	
MAG	Gordon Tyus	gtyus@azmag.gov	
MCDOT	Robert Herz	rherz@mail.maricopa.gov	
MCDOT	John Shi	johnshi@mail.maricopa.gov	

Company Name	Name	E-mail Address	Signature
Southwest Asphalt	Greg Groneberg	ggroneberg@fisherind.com	
Southwest Asphalt	Richard Kissling	rkissling@fisherind.com	
Southwest Rock Products	Kevin Moss	kmoss@southwestrockproducts.com	
Speedie & Associates	Don Cornelison	dcornelison@speedie.net	
SRMG - ARPA	Jeff Hearne	jhearne@srmaterials.com	Jeff Hearne
Western Refining	Sam Huddleston	sam.huddleston@wnr.com	
WSP	Brian Gallimore	bgallimore@wspinc.net	
WTI	Phillip Feliz	phil.f@wt-us.com	
Vulcan	Alex Carter	cartera@vmcmail.com	
Vulcan	Llyoyd Glover	gloverl@vmcmail.com	

Public Works Directors

Roster

Name:	Organization	Title	Phone Nos.	E-mail/Fax	Address:	Paper:
Louis Andersen	Pinal County Public Works	Director	(520) 866-6558 (520) 858-6213 xcell	Louis.Andersen@pinalcountyaz.gov (520) 866-6511	31 N. Pinal Street, Bldg. F Florence AZ 85132	Yes
Rose Mary Arellano	Town of Guadalupe	Interim Town Manager	(480) 505-5367 (480) 567-5253	rosemary@guadalupeaz.org;rarellano@guadalupeaz.org (480) 730-3097	9241 S. Avenida del Yaqui Guadalupe AZ 85283	Yes
Don Bessler	City of Tempe	Public Works Director	(480) 350-8205	don_bessler@tempe.gov	31 East 5th Street, Garden Level Tempe AZ 85281	Yes
Cindy Blackmore	City of Avondale	Acting Public Works Director	(623) 333-4410	cblackmore@avondale.org	399 E. Lower Buckeye Road, Suite 100 Avondale AZ 85323	Yes
Ian Cordwell	Town of Cave Creek	Director of Planning	(480) 488-6614 (480) 595-1930 x114	icordwell@cavecreek.org (480) 488-2263	37622 N. Cave Creek Road Cave Creek AZ 85331	Yes
Ray Dovalina Jr., PE	City of Phoenix	Assistant Street Transportation Director	(602) 256-4341	ray.dovalina@phoenix.gov (602) 495-2016	200 W. Washington Street, 12th Floor Phoenix AZ 85003	Yes
Jason Earp	City of Tolleson	Field Operations Director	(623) 936-3381	jearp@tollesonaz.org	9555 W Van Buren Tolleson AZ 85353	Yes
Cato Esquivel Jr	City of Goodyear	Transportation Manager	(623) 882-7500 (623) 693-0034	cesquivel@goodyearaz.gov (623) 882-7941	195 N. 145th Avenue Goodyear AZ 85338	Yes
Jorge Gastelum CIP	City of El Mirage	City Engineer	(623) 876-2977	jgastelum@cityofelmirage.org (623) 933-8418	12145 NW Grand Avenue El Mirage AZ 85335	Yes
Mike Gent	City of Surprise	Public Works Director	(623) 222-6223	Mike.Gent@surpriseaz.gov (623) 222-6002	16000 N. Civic Center Plaza Surprise AZ 85374	Yes
Randy Harrel	Town of Fountain Hills	Town Engineer	(480) 816-5112 x130	rharrel@fh.az.gov (480) 837-1404	16705 E Ave of the Fountains Fountain Hills AZ 85268	Yes
Beth Huning	City of Mesa	City Engineer	(480) 644-2512	beth.huning@mesaaz.gov	PO Box 1466 Mesa AZ 85211	Yes

Public Works Directors

Roster

Name:	Organization	Title	Phone Nos.	E-mail/Fax	Address:	Paper:
Jennifer Jack	Salt River Pima-Maricopa Indian Community	Project Manager	(480) 362-7747	jennifer.jack@srpmic-nsn.gov	10005 E. Osborn Road Scottsdale AZ 85256	Yes
Stuart Kent	City of Peoria	Deputy Public Works Director	(623) 773-7502	Stuart.Kent@peoriaaz.gov	9875 N. 85th Avenue Peoria AZ 85345	Yes
Jess Knudson	Town of Florence	Assistant Town Manager/Public Information Officer	(520) 868-7541	Jess.knudson@florenceaz.gov	PO Box 2670 Florence AZ 85132	Yes
Kini L.E. Knudson P.E.	City of Phoenix, Street Transportation Department	Acting Assistant Director and City Engineer	(602) 262-6781	kini.knudson@phoenix.gov	200 W. Washington, 5th Floor Phoenix AZ 85003	Yes
Vince Lorefice	Town of Wickenburg	Public Works Director	(928) 684-2761	vlorefice@wickenburgaz.org	155 N Tegner Ste A Wickenburg AZ 85390	Yes
Scott Lowe	City of Buckeye	Public Works Director	(623) 349-6815	slowe@buckeyeaz.gov (623) 344-6026	530 E Monroe Ave Buckeye AZ 85326	Yes
Erika McCalvin	Fort McDowell Yavapai Nation	Planning Project Manager Community and Economic Development	(480) 789-7742	emccalvin@ftmcdowell.org (480) 789-7798	Email Only AZ	No
Kyle Mieras AICP	Town of Gilbert	Development Services Director	(480) 503-6705 (480) 558-7768	kyle.mieras@gilbertaz.gov (480) 503-6170	50 E. Civic Center Drive Gilbert AZ 85296	Yes
Kenneth C Morgan PE	Town of Gilbert	Public Works Director	(480) 503-6516 xofc (480) 254-9544 xcell	Kenneth.Morgan@gilbertaz.gov	900 E Juniper Ave Gilbert AZ 85234	Yes
Marty Mosbrucker	Town of Youngtown	Public Works Manager	(623) 933-8286	mmosbrucker@youngtownaz.org	12030 Clubhouse Sq Youngtown AZ 85363	Yes
Giao Pham PE	City of Apache Junction	Director of Public Works	(480) 474-8513	gpham@ajcity.net (480) 982-8005	575 E. Baseline Avenue Apache Junction AZ 85119	Yes
Chuck Ransom	City of Litchfield Park	Director of Field Operations	(623) 935-1066 x109	cransom@litchfield-park.org (623) 535-9754	214 W Wigwam Blvd Litchfield Park AZ 85340-4636	Yes
Robin Russell	Fort McDowell Yavapai Nation	Acting Public Works Manager	(480) 789-7350	rrussell@ftmcdowell.org	18539 E. Harquahala Rd. Ft. McDowell AZ 85264	Yes

Public Works Directors

Roster

Name:	Organization	Title	Phone Nos.	E-mail/Fax	Address:	Paper:
Brent Skoglund	Town of Paradise Valley	Public Works Superindendent	(480) 348-3695	bskoglund@paradisevalleyaz.gov	6401 E Lincoln Dr Paradise Valley AZ 85253-	Yes
Jennifer Toth P.E.	Maricopa County Department of Transportation	Transportation Director & County Engineer	(602) 506-4700	JenniferToth@mail.maricopa.gov	2901 W. Durango Street Phoenix AZ 85009	Yes
Troy White	Town of Queen Creek	Public Works Division Manager	(480) 358-3746	troy.white@queencreek.org	22350 S Ellsworth Rd Queen Creek AZ 85242-9311	Yes
Dan Worth	City of Scottsdale	Executive Director Public Works	(480) 312-5555	dworth@scottsdaleaz.gov	3939 North Drinkwater Blvd Scottsdale AZ 85251	Yes
R.J. Zeder	City of Chandler	Transportation & Development Director	(480) 782-3401	robert.zeder@chandleraz.gov	PO Box 4008 MS 403 Chandler AZ 85225-4008	Yes