Strategic Transportation Safety Plan

MAG Contract No. 529 Project No. SP13-01

Technical Memorandum No. 7 – Improving Safety via Traffic Engineering and Technology Solutions

7.1 INTRODUCTION

The Maricopa Association of Governments is developing a comprehensive update of the 2005 Strategic Transportation Safety Plan (STSP) with oversight by the MAG Transportation Safety Committee and the Transportation Safety Stakeholders Group (TSSG). The new STSP will establish regional vision, goals, objectives, strategies, countermeasures, and performance measures for transportation safety. It is a data-driven, multi-year comprehensive plan that establishes goals, objectives, and key action areas and integrates the four E's of highway safety – engineering, education, enforcement and emergency medical services (EMS). The STSP allows MAG safety programs and member agencies to work together in an effort to align goals, leverage resources and collectively address the region's safety challenges. The STSP will also identify strategies for addressing new areas of transportation safety. The development of the STSP will be closely coordinated with the ongoing development of the State's Strategic Highway Safety Plan (SHSP) by the Arizona DOT.

This technical memorandum is the seventh in a series to document the effort on the Plan. Technical Memorandum No. 7 summarizes the work completed on Task 7: Improving Safety via Traffic Engineering and Technology Solutions. This includes proven infrastructure-based technology applications for reducing traffic conflicts and improving road safety in the following areas:

- Mid-block crossings, Signs, and Illumination
- Emergency Vehicle Preemption (EVP)
- Connected Vehicle Development
- Safer Work Zones
- Active Traffic Management (ATM)
- Wrong-Way Driver Technology

7.2 MID-BLOCK CROSSINGS, SIGNS, AND ILLUMINATION

A variety of engineering (e.g., geometric design, traffic control device) treatments are available with the potential of improving safety at midblock pedestrian crossings. For this report, "Midblock" has been expanded to include any crossing that is not controlled by a traffic signal, STOP or YIELD sign, and much of the discussion will focus on collector and arterial streets that are more challenging for pedestrians to cross. Research studies have been conducted across the United States and in a number of other countries to understand better the effects of these treatments, including intelligent transportation system (ITS) treatments that hold the promise of improved pedestrian safety. This technical memorandum contains summaries of four ITS crossing treatments, along with reported results on their effectiveness. A list of potential midblock crossing treatments is provided in Table 1.

Table 1. List of Pedestrian Treatments for Unsignalized Locations

TREATMENT
Advance stop or yield line and sign
Barrier – median
Barrier – roadside/sidewalk (railing or fencing)
Bus stop location and crossing treatments
Circular beacons
Curb extensions
Flags (pedestrian crossing)**
Illumination*
In-roadway warning lights**
In-street pedestrian crossing signs
Marked crosswalks and crosswalk marking patterns
Motorist warning signs
Overpasses and underpasses
Pedestrian Hybrid Beacon (PHB) (also known as HAWK)*
Pedestrian crossing island, including 2-stage islands
Puffin crossing*
Raised crosswalks
Rectangular rapid flashing beacon (RRFB)*
Road diet

*These treatments have ITS elements
** While these countermeasures are in use by some agencies, there may be some liability or cost-effectiveness issues associated with them

This section will focus on a subset of the above the pedestrian treatments including crosswalks and crosswalk marking patterns, advance yield lines and signs, bus stop location, pedestrian barriers, pedestrian hybrid beacons (PHBs), Puffin detectors, pedestrian crossing islands, and rectangular rapid flash beacons (RRFBs). Some of these treatments discussed are not ITS-related, but they may comprise a part of an ITS–related midblock treatment, such as crosswalks markings, barriers, or two-stage crossing islands.

7.2.1 Marked Crosswalks

Marked crosswalks are the basic element of a midblock crossing, and would be an essential element of any midblock crossing using ITS technology. Zegeer et al.[1,2] have performed the most authoritative study on the effectiveness of crosswalk pavement markings alone as a pedestrian crossing treatment at uncontrolled locations. Five years of pedestrian collisions at 1000 marked crosswalks and 1000 matched unmarked comparison sites in 30 U.S. cities were analyzed. The study concluded that no meaningful differences in crash risk exist between marked and unmarked crosswalks on two-lane roads or on low-volume multilane roads. The study indicated that as traffic volumes, speeds, and street widths increase, crosswalk markings alone are associated with a greater crash frequency than no crosswalk markings. The Zegeer crosswalk study recommendations indicate that the issue should not be whether to provide crosswalk markings on high-volume, high-speed streets. Instead, the recommendations point to the necessity of providing other treatments in addition to crosswalk markings that will provide a safer street crossing for pedestrians (such as

[1] Zegeer, C.V., J.R. Stewart, and H. Huang. (2002). *Safety Effects of Marked vs. Unmarked Crosswalks at Uncontrolled Locations: Executive Summary and Recommended Guidelines*, Report No. FHWA-RD-01-075, Federal Highway Administration, Washington, D.C., March 2002.
[2] Zegeer, C.V., J.R. Stewart, H. Huang, and P. Lagerway. (2001). "Safety Effects of Marked versus Unmarked Crosswalks at Uncontrolled Locations: Analysis of Pedestrian Crashes in 30 Cities," In *Transportation Research Record 1773*, Transportation Research Board, National Research Council, Washington, D.C., pp. 56-68.

a raised crossing island, RRFB or PHB) or to make the streets so they are pedestrian-friendly. The results of this study were adopted by the FHWA to provide guidance in the 2009 MUTCD for installation of new uncontrolled marked crosswalks (Section 3.16, paragraph 09).

Knoblauch, Nitzburg, and Siefert reported on a study of the effects of pedestrian crosswalk markings on pedestrian and driver behavior.[3] The study included 11 unsignalized intersections in four cities: Sacramento, CA; Richmond, VA; Buffalo, NY; and Stillwater, MN. The authors presented the following conclusions:

- Drivers appeared to drive slower when approaching a marked crosswalk. The speed reductions are modest but evident nonetheless. This finding implies that most motorists are aware of the pedestrian crossing.
- No changes in driver yielding behavior were observed after the installation of marked crosswalks. This result implies that motorists may be slowing down just in case they are forced to stop by a pedestrian stepping into the roadway.
- There were no changes in blatantly aggressive pedestrian behavior after installations of marked crosswalks, indicating that pedestrians do not feel overly protected by marked crosswalks.
- Overall, crosswalk usage increased after marked crosswalks were installed. The authors found that single pedestrians are more likely to use marked crosswalks than a group of pedestrians traveling together.

In a 2009 FHWA study of crosswalk markings, researchers investigated the relative daytime and nighttime visibility of three crosswalk marking patterns: bar pairs, continental, and transverse lines.[4] For the study sites, the findings indicate that detection distances for bar pairs and continental markings were statistically similar, but they were statistically longer than the detection distance to the transverse crosswalk markings, both during the day and at night. For the existing midblock locations, the drivers detected the continental markings at about twice the distance upstream as the transverse markings during daytime conditions. This increase in distance translates to 8 seconds of increased awareness of the presence of the crossing at 30-mph operating speeds.

The research team worked with the National Committee on Uniform Traffic Control Devices (NCUTCD) to develop recommendations for incorporating the findings from the study into the Manual on Uniform Traffic Control Devices (MUTCD). The recommendations were endorsed on June 23, 2011 at their midyear meeting. Figure 1 shows the proposed figure for inclusion in the next edition of the MUTCD for crosswalk marking patterns.

[3] Knoblauch, R.L., M. Nitzburg, and R.F. Seifert. (2001). *Pedestrian Crosswalk Case Studies: Sacramento, California; Richmond, Virginia; Buffalo, New York; Stillwater, Minnesota,* Report No. FHWA-RD-00-103, Federal Highway Administration, Washington, D.C.
[4] Fitzpatrick, K., Chrysler, S.T., Iragavarapu, V., and Park, E.S. (2010). *Crosswalk Marking Field Visibility Study*, Report No. FHWA-HRT-10-068, Federal Highway Administration, Washington, DC.

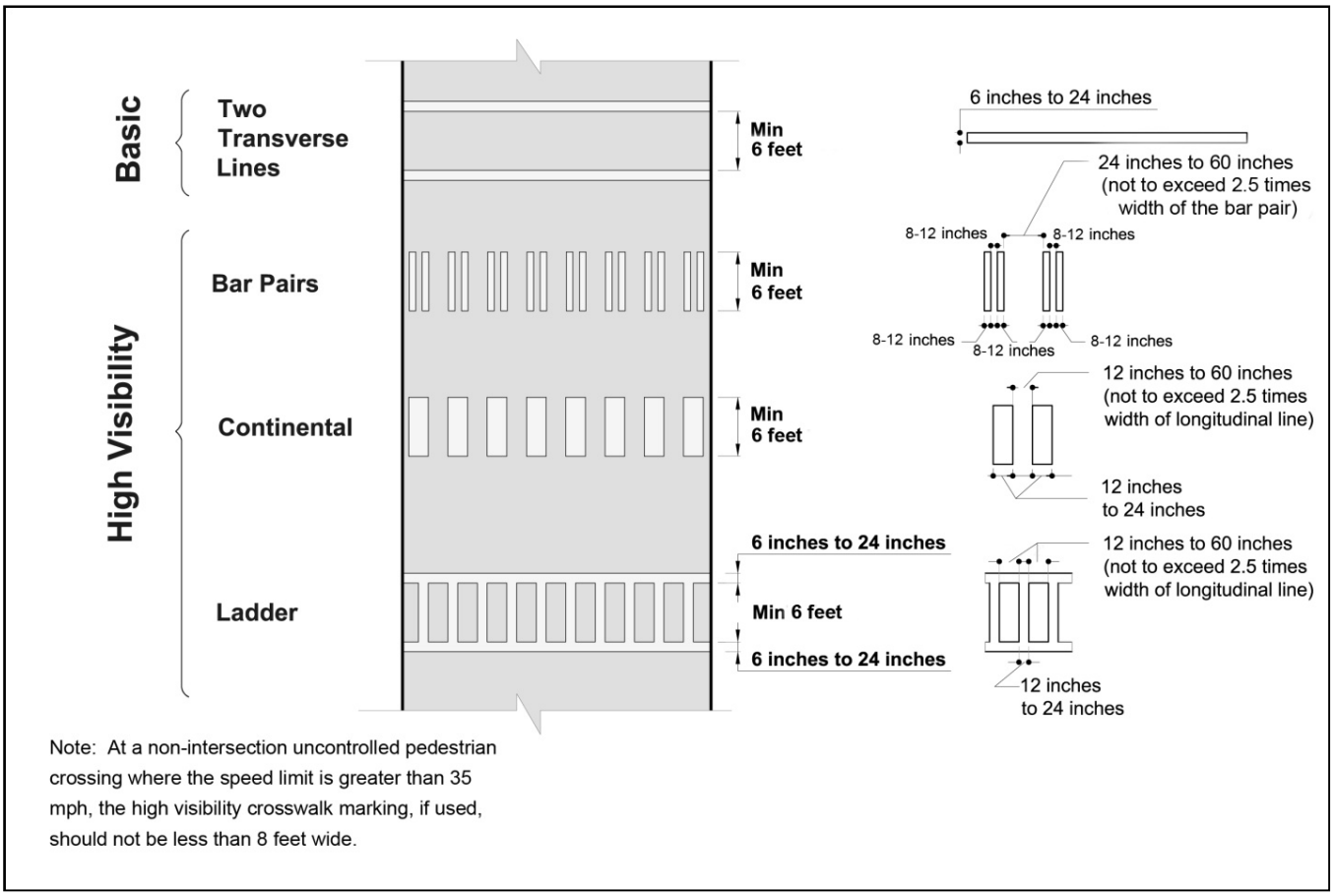

Figure 1. Examples of Crosswalk Markings [Figure Proposed to Replace Existing MUTCD Figure 3B-19]

Crosswalks may also be made to appear more visible to drivers if they are wider (15 feet wide instead of 6 feet or 10 feet wide) or if they are accompanied by advance pavement stencils or signs. For the purpose of reducing maintenance costs at high visibility crosswalks, it is optimal to place the bars or bar pairs outside of the wheel paths to minimize wear.

7.2.2 Advance Yield Line and Signs

Advance yield lines (i.e., pavement markings) place the traditional stop or yield line 20 to 50 ft upstream of the crosswalk. These are optional treatments that may be used on uncontrolled crosswalks and are particularly advantageous for streets with multiple approach lanes. Since Arizona State Law ARS 28-792 requires that: *"the driver of a vehicle shall yield the right-of-way, slowing down or stopping if need be in order to yield, to a pedestrian crossing the roadway within a crosswalk"*, MUTCD Section 2B.11, requires the use of advance yield lines and signs as opposed to advance stop lines at uncontrolled crosswalks. Per MUTCD Section 3B.16, advance yield lines must be accompanied by YIELD HERE TO PEDESTRIAN signs for uncontrolled crosswalks with multilane approaches. Advance yield lines address the issue of multiple-threat crashes on multilane roadways, where one vehicle stops for a pedestrian in the crosswalk but inadvertently screens the pedestrian from the view of vehicles in adjacent lanes. Several studies have documented that advance yield lines decrease pedestrian-vehicle conflicts and increase driver yielding at greater distances

from the crosswalk.[5,6,7,8] Studies by Van Houten and others have also demonstrated the effectiveness of advance yield lines and YIELD HERE TO PEDESTRIAN signs.[9,10,11]

7.2.3 Barrier – Median or Roadside/Sidewalk

Placing a barrier in a median is a pedestrian crossing treatment discussed in a review of pedestrian safety research by Campbell et al.[12] The purpose of median barriers is to discourage pedestrians from crossing at undesirable locations and to encourage them to cross at a crosswalk. When a median barrier or roadside/sidewalk barrier is used within the clear zone, the barrier treatment must not create a visibility obstruction to motorists or pedestrians, and should be designed with crash-worthy (forgiving) features or be protected from errant vehicles.

A recent FHWA International Scan found that roadside/sidewalk pedestrian railings were common in the United Kingdom, where they were used to direct pedestrian movements to preferred crossing locations at intersections and in median islands.[13] They also offered a useful guide to pedestrians with visual disabilities. The railings appeared to be most common in areas with high pedestrian traffic, such as the installations in London shown in Figure 2.

Figure 2. Examples of Pedestrian Railing in London[12]

[5] Making Crosswalks Safer for Pedestrians: Application of a Multidisciplinary Approach to Improve Pedestrian Safety at Crosswalks in St. Petersburg, Florida. Center for Urban Transportation Research (CUTR), University of South Florida, Tampa, Florida, July 2000.
[6] Van Houten, R. (1988). "The Effects of Advance Stop Lines and Sign Prompts on Pedestrian Safety in a Crosswalk on a Multilane Highway," In *Journal of Applied Behavioral Analysis*, Volume 21, pp. 245-251.
[7] Van Houten, R., and L. Malenfant. (1992). "The Influence of Signs Prompting Motorists to Yield before Marked Crosswalks on Motor Vehicle-Pedestrian Conflicts at Crosswalks with Flashing Amber," In *Accident Analysis & Prevention*, Vol. 24, No. 3, pp. 217-225.
[8] Van Houten, R., J.E.L. Malenfant, and D. McCusker. (2001). "Advance Yield Markings: Reducing Motor Vehicle-Pedestrian Conflicts at Multilane Crosswalks with Uncontrolled Approach," In *Transportation Research Record 1773*, Transportation Research Board, National Research Council, Washington, D.C., pp. 69-74.
[9] Zegeer, C.V., J.R. Stewart, H. Huang, and P. Lagerway. (2001). "Safety Effects of Marked versus Unmarked Crosswalks at Uncontrolled Locations: Analysis of Pedestrian Crashes in 30 Cities," In *Transportation Research Record 1773*, Transportation Research Board, National Research Council, Washington, D.C., pp. 56-68.
[10] Knoblauch, R.L., M. Nitzburg, and R.F. Seifert. (2001). *Pedestrian Crosswalk Case Studies: Sacramento, California; Richmond, Virginia; Buffalo, New York; Stillwater, Minnesota*, Report No. FHWA-RD-00-103, Federal Highway Administration, Washington, D.C.
[11] Fitzpatrick, K., Chrysler, S.T., Iragavarapu, V., and Park, E.S. (2010). *Crosswalk Marking Field Visibility Study*, Report No. FHWA-HRT-10-068, Federal Highway Administration, Washington, DC.
[12] Campbell, B.J., C.V. Zegeer, H.H. Huang, and M.J. Cynecki. (2003*). A Review of Pedestrian Safety Research in the United States and Abroad.* Report No. FHWA-RD-03-042. Federal Highway Administration.
[13] Fischer, E.L., G.K. Rousseau, S.M. Turner, E.J. Blais, C.L. Engelhart, D.R. Henderson, J.A. Kaplan, V.M. Keller, J.D. Mackay, P.A. Tobias, D.E. Wigle, and C.V. Zegeer. (2010) *Pedestrian and Bicyclist Safety and Mobility in Europe.* Office of International Programs, Federal Highway Administration, Washington, DC.

Campbell et al.[7] discuss several studies in which chains, fences, guardrails, and other similar devices have been proposed as a means of channelizing and protecting pedestrians.[14,15,16,17]

7.2.4 Bus Stop Location and Crossing Treatments

TCRP Report 125: Guidebook for Mitigating Fixed-Route Bus-and-Pedestrian Collisions provides information on pedestrian-bus crashes and countermeasures and strategies for reducing these crashes.[18] Lack of pedestrian friendly environments was noted as being one of the factors. This includes sidewalk conditions such as broken and uneven sidewalks, narrow sidewalks, sidewalk obstacles, and lack of sidewalks or other positive separation. Lack of lighting was another concern noted.

According to Campbell et al.[19] 2 percent of all pedestrian collisions in urban areas can be classified as pedestrian collisions at bus stops. Most do not involve a pedestrian being struck by a bus, but the bus creates a visual screen between approaching drivers and pedestrians crossing in front of the bus. In rural areas, pedestrian crashes related to school bus stops were identified in 3 percent of all pedestrian crashes. A countermeasure proposed for urban crashes involved relocating bus stops to the far side of intersections to encourage pedestrians to cross behind rather than in front of the bus. This allows the pedestrian to be seen and to see oncoming traffic closest to the bus. Additional guidance for the location and design of bus stops is provided in TCRP Report 19.[20] Additionally, crossings should be evaluated at bus stops to assure appropriate treatments are provided to assist pedestrians crossing wide, multilane streets. These treatments may include median islands, lighting, crosswalks, warning signs, RRFBs, PHBs or other ITS treatments.

7.2.5 Pedestrian Hybrid Beacon (Also known as HAWK)

Pedestrian hybrid beacons (PHBs) are one of the nine proven safety countermeasures being promoted by the FHWA.[21] This unique pedestrian crossing device was developed and field-tested in Tucson, Arizona and was adopted for use in the 2009 MUTCD (Section 4F). It was originally named the "High intensity Activated crosswalk" (HAWK), but when adopted into the MUTCD, it was renamed "Pedestrian Hybrid Beacon". The PHB is placed to allow pedestrians to cross the main road with the beacons typically mounted both on the roadside and on mast arms over the major approaches to the crossing (see Figure 3). The pedestrian hybrid beacon head consists of two red lenses above a single yellow lens. The heads for motor vehicle traffic are normally "dark," but when activated by a pedestrian, it first displays a few seconds of flashing yellow followed by a steady yellow change interval, and then displays a steady red indication to drivers, which creates a gap for pedestrians to use to cross the major roadway. During the flashing pedestrian clearance interval, the pedestrian hybrid beacon changes to a wig-wag flashing red, allowing drivers to proceed after stopping if the pedestrian has cleared their half of the roadway, thereby minimizing vehicle delays. Pedestrians are controlled by standard Walk/Don't Walk pedestrian signal head that remains in solid DON'T WALK until activated by a pedestrian (except for PHBs at roundabouts where the pedestrian signals may remain dark until pedestrian activated).

---

[14] Knoblauch, R.L. (1977). Causative Factors and Countermeasures for Rural and Suburban Pedestrian Accidents: Accident Data Collection and Analysis, Report No. DOT-HS-802-266, National Highway Traffic Safety Administration.
[15] Snyder, M.B. and R.L. Knoblauch. (1971). *Pedestrian Safety: The Identification of Precipitating Factors and Possible Countermeasures,* Report No. DOT-HS-800-403, 2 Vols., National Highway Traffic Safety Administration.
[16] Knoblauch, R.L., W. Moore, Jr., and P.R. Schmitz. (1978). *Pedestrian Accidents Occurring on Freeways: An Investigation of Causative Factors. Accident Data Collection and Analysis,* Report Nos. FHWA-RD-78-169/171, Federal Highway Administration.
[17] *Model Pedestrian Safety Program. User's Manual.* Report No. FHWA-IP-78-6, Federal Highway Administration, 1977 and 1987 editions.
[18] Pecheux, K. K., J. Bauer, S. Miller, J. Rephlo, H. Saporta, S. Erickson, S. Knapp, and J. Quan. (2008). *Guidebook for Mitigating Fixed-Route Bus-and-Pedestrian Collisions.* TCRP Report 125.
[19] Van Houten, R., and L. Malenfant. (1992). "The Influence of Signs Prompting Motorists to Yield before Marked Crosswalks on Motor Vehicle-Pedestrian Conflicts at Crosswalks with Flashing Amber," In *Accident Analysis & Prevention*, Vol. 24, No. 3, pp. 217-225.
[20] Fitzpatrick, K., K. Hall, D. Perkinson, L. Nowlin, and R. Koppa. (1996). *Guidelines for the Location and Design of Bus Stops*. TCRP Report 19.
[21] FHWA Memorandum from Tony Faust, Acting Associate Administrator to Division Administrators, USDOT, FHWA, January 12, 2012

Figure 3. Example Pedestrian Hybrid Beacon (PHB aka HAWK) Treatment in Tucson, AZ

A study using a before-and-after evaluation of the safety performance of the pedestrian hybrid beacon was conducted in Tucson.[22] From the evaluation that considered data for 21 pedestrian hybrid beacon treatment sites and 102 unsignalized intersections (reference group), the researchers found the following changes in crashes after installation of the pedestrian hybrid beacons:

- A 29-percent reduction in total crashes (statistically significant).
- A 15-percent reduction in total severe crashes (not statistically significant).
- A 69-percent reduction in pedestrian crashes (statistically significant).

The MUTCD (Section 4F) includes warrants for the installation of the pedestrian hybrid beacons for low-speed roadways where speeds are 35 mph or less, and high-speed roadways where speeds are more than 35 mph. Meeting a warrant does not require installation of a PHB. Instead, it means that the advantages of installing the PHB may outweigh the disadvantages and a PHB may be considered for installation. Where multiple locations meet a PHB warrant, agencies should develop a means to prioritize candidate locations.

The MUTCD requires a CROSSWALK STOP ON RED (symbolic circular red) (R10-23) sign be mounted adjacent to a PHB face on each major street approach (MUTCD 4F.02, paragraph 08). The PHB shall be pedestrian activated and must be installed in conjunction with a marked crosswalk. Advance stop lines with STOP HERE ON RED signs should be installed 50 to 65 feet in advance of the mast arm-mounted beacons to allow drivers to stop where they can best see the overhead beacons. When first installed in a community, education of motorists, pedestrians and the police is recommended.

[22] Fitzpatrick, K. and Park, E.S. (2010). *Safety Effectiveness of the HAWK Pedestrian Crossing Treatment*, Report No. FHWA-HRT-10-042, Federal Highway Administration, Washington, DC.

7.2.6 Puffin

Although the Puffin treatment may be used at a traffic signal to accommodate slower pedestrians, Puffin technology may also be used at a PHB to automatically hold the flashing red signal longer if a pedestrian is detected in the crosswalk at the end of the clearance interval. These devices use automated pedestrian detection (microwave, video or other technology) that can detect if a pedestrian is still in the crossing when the pedestrian clearance interval is about to expire. The technology has the ability to add an increment of clearance time and may be set to provide a clearance interval based on a slower (3.0 ft/sec) walking speed.

Figure 4 shows an application of a puffin detector used at a PHB in Tucson for a senior citizen crossing Broadway Road which is 112 feet wide. This location was considered inappropriate for a traffic signal. The pedestrian clearance is normally timed for a crossing speed of 4.0 ft/sec, which is too short for some elderly pedestrians. The puffin detector extends the crossing time for those seniors that need the extra time (if needed). The 3.0 ft/sec clearance interval was found to accommodate 95 to 98% of the pedestrians using the crossing. When the extra crossing time is not needed for pedestrians, it is returned to main street traffic to minimize vehicle delay.

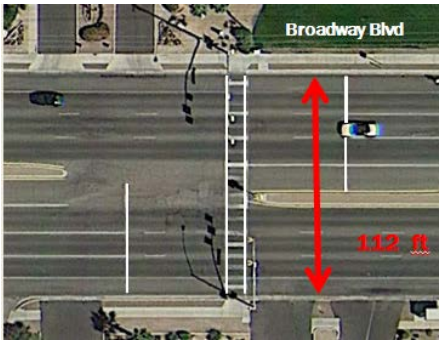

Figure 4. PHB with Puffin Detectors (circled in red) to Accommodate Slower Walkers, Tucson, AZ

Studies showed that the PHB with the Puffin detectors increased motorist yielding and improved pedestrian safety. The reception of the Puffin crosswalk on Broadway Boulevard has been very positive. The AARP and the ITE recognized the crossing for its pedestrian safety improvements.

7.2.7 Rectangular Rapid-Flashing Beacon (RRFB)

The rectangular rapid-flashing beacon uses an eye-catching flash sequence to draw drivers' attention to the warning sign and the need to yield to a waiting pedestrian (Figure 5). The flash pattern mimics the flash pattern of an emergency vehicle. The RRFB is normally located on the side of the road below pedestrian crosswalk or school crossing warning signs or mounted overhead with a warning sign, and can be activated by a pedestrian either actively (pushing a button) or passively (detected by sensors).

In July 2008, FHWA issued an interim approval for optional use of RRFBs as warning beacons to supplement standard pedestrian or school crossing signs at crosswalks across uncontrolled approaches. (http://mutcd.fhwa.dot.gov/resources/interim_approval/ia11/fhwamemo.htm)

The flash sequence for the RRFB has been described as a 2-5 pattern, with two slower flashes followed by five rapid flashes. (As an aside, the human eye can only detect 3 of the 5 rapid flashes, but the existence of 5 rapid flashes can be confirmed through the use of an oscilloscope.) The FHWA Interim Approval for the RRFB states that when used, two Pedestrian or School Crossing signs shall be installed at the crosswalk, one on the right-hand side of the roadway and one on the left-hand sign of the roadway.[23] On a divided highway, the left-hand side assembly should be installed on the median, if practical, rather than on the far left side of the highway. A later interpretation indicated that overhead mounting is appropriate, and that if overhead mounting is used, only a minimum of one such sign per approach is required and it should be located over the approximate center of the lanes of the approach.[24]

Figure 5. Overhead and Side-Mount RRFBs with a Two-Stage Crossing Island and Ladder Crosswalk in Phoenix, AZ

[23] Furst, A. (2008). "MUTCD- Interim Approval for Optional Use of Rectangular Rapid Flashing Beacons (IA-11)." U.S. Department of Transportation Federal Highway Administration Memorandum, July 16, Washington, D.C. accessed from: http://mutcd.fhwa.dot.gov/resources/interim_approval/ia11/fhwamemo.htm. Accessed on July 9, 2013.

[24] Pisano, P. (2009). *4-376(I) – RRFB Overhead Mounting. U.S. Department of Transportation Federal Highway Administration Memorandum, December 9, 2009.* Washington, DC. Accessed from: http://mutcd.fhwa.dot.gov/resources/interpretations/4_376.htm. Accessed on July 9, 2013.

A FHWA study evaluated RRFBs at 22 sites in St. Petersburg, Florida; Washington, D.C.; and Mundelein, Illinois.[25] The RRFBs produced an increase in yielding behavior at all locations. During the baseline period before the introduction of the RRFB, yielding for individual sites ranged between 0 and 26 percent. The average yielding for all sites was 4 percent before installation of the RRFBs. Within 7 to 30 days following installation of an RRFB, the average yielding increased to 78 percent from the baseline condition, a statistically significant increase. Similar yielding values were observed during the remainder of the study period.

Data collected over a 2-year period, at 18 of the sites confirmed that the RRFBs continue to be effective at encouraging drivers to yield to pedestrians, even over the longer term. By the end of the 2-year follow-up period, the researchers determined that the introduction of the RRFB was associated with yielding that ranged between 72 and 96 percent.

There have been several other subsequent studies to evaluate the effectiveness of the RRFB, and FHWA research is ongoing to evaluate the shape of the flashers, the placement of the flasher with respect to the sign (above versus below), the flash pattern, and brightness of the LED lights, among other features. A recent study on the flash patterns concluded that the WW+S and Blocks patterns developed as part of this research study are as effective as the 2-5 pattern. The FHWA issued an Interim Approval on July 25, 2014 allowing RRFB's to use an additional (WW+S) flash pattern as well as the original 2-5 flash pattern.

7.2.8 Pedestrian Crossing Islands and 2-Stage Islands

Medians and pedestrian crossing islands are one of the nine proven safety countermeasures being promoted by the FHWA.[26] Crossing the street can be a complex task for pedestrians. Pedestrians must estimate vehicle speeds, adjust their walking speeds, determine adequacy of gaps, predict vehicle paths, and time their crossings appropriately. Drivers must see pedestrians, estimate vehicle and pedestrian speeds, determine the need for action, and react accordingly. At night, darkness and headlamp glare make the crossing task even more complex for both pedestrians and drivers.[27] Some midblock crossings may be too wide to be crossed during available gaps without the assistance of a traffic signal. Median refuge islands simplify the street crossing task by permitting pedestrians to make vehicle gap judgments for one direction of traffic at a time. Recent refuge island designs can incorporate an angled or staggered pedestrian opening, which better aligns pedestrians to face the second direction of oncoming traffic (see Figure 6). Refuge areas may be delineated by markings on the roadway or raised above the surface of the street.

[25] Shurbutt, J., and R. Van Houten (2010) *Effects of Yellow Rectangular Rapid-Flashing Beacons on Yielding at Multilane Uncontrolled Crosswalks*. Report No. FHWA-HRT-10-043, Federal Highway Administration, Washington, D.C.
[26] FHWA Memorandum from Tony Faust, Acting Associate Administrator to Division Administrators, USDOT, FHWA, January 12, 2012
[27] *Safety Benefits of Raised Medians and Pedestrian Refuge Areas*. Report No. FHWA-SA-10-031. Federal Highway Administration, Washington DC, 2010.

Figure 6. Raised Median with Two-Stage Island on Van Buren Street west of 32nd Avenue in Phoenix, AZ

Other studies have found a significant crash reduction factor from the use of raised median islands or crosswalks. For example:

- Installing raised medians was associated with a 25% reduction in pedestrian crashes in a study in Florida.[28]
- Installing raised medians associated with a 46% reduction in pedestrian crashes at sites with marked crosswalks, and a 39% reduction at sites with unmarked crosswalks in a sample from 30 U.S. cities.[29]
- Installing refuge islands is associated with a 56% reduction in pedestrian crashes based on the ITE Toolbox.[30]

Phoenix has installed several two-stage crossing islands on multilane streets (Figure 6) to encourage pedestrians to cross one half of the street at a time. It is important the raised islands be placed to avoid blocking driveways or left-turn storage serving driveways or side streets, unless there is an intent to eliminate a specific turning movement. The islands must be ADA compliant with wheelchair ramps and 4 ft x 4 ft landings or wheelchair cut-throughs that are five feet wide. Islands with cut-throughs must also be designed to drain properly and may require hand-cleaning to remove sand depositions and other debris from time to time. Truncated dome tactile warning strips must be used in the crossing islands if the islands are 6 feet wide or wider. When individual crossing islands for pedestrians are installed, they should be at least six feet wide (desirably 8 to 10 feet wide) and 20 feet in length. The islands can be made to appear longer and be more visible to approaching drivers through the use of pavement marking treatments (cross-hatching) on either side of the island.

[28] Gan, A., Shen, J., and Rodriguez, A. (2005). Update of Florida Crash Reduction Factors and Countermeasures to improve the Development of District Safety Improvement Projects. Florida Department of Transportation
[29] Zegeer, C., Stewart, R., Huang, H., and Lagerwey, P. (2002). Safety Effects of Marked vs. Unmarked Crosswalks at Uncontrolled Locations: Executive Summary and Recommended Guidelines, FHWA-RD-01-075.
[30] Institute of Transportation Engineers. (2004). Toolbox of Countermeasures and Their Potential Effectiveness to Make Intersections Safer. Briefing Sheet 8, FHWA

7.2.9 Two-Stage Pedestrian Hybrid Beacon

For wide crossings of busy streets, some of the above treatments can be combined to create a safer and more effective midblock crossing treatment that can better serve pedestrians while minimizing the adverse impacts on motor vehicle traffic. One example is the two-stage PHB on Scottsdale Road between Greenway Pkwy and Kierland Blvd and connects two busy shopping centers. This treatment combined the use of marked crosswalks, a raised crossing island, pedestrian barriers, and a PHB with advance stop lines (Figure 7). The PHB is located in between two traffic signals; spaced about 450 feet from either signal.

Figure 7. Two-Stage PHB in Scottsdale, AZ on Scottsdale Road

With a two-stage crossing, the pedestrian clearance distance is only from the curb to the median (approximately 49 feet, requiring 14 seconds pedestrian clearance at 3.5 ft/sec) instead of the entire crossing distance (about 112 feet, requiring 32 seconds pedestrian clearance at 3.5 ft/sec). This greatly improved the efficiency to the crossing pedestrians as well as the motor vehicles on Scottsdale Road. Barriers in the raised median guide pedestrians in between the two crosswalks and pedestrian push buttons exist along both sides of the street and in the median. It is interesting to note that prior to the installation of the two-stage PHB, the peak-hour crossings observed at this location of Scottsdale Road was 23 pedestrians. "After" studies conducted in December 2011 revealed a peak-hour crossing of 391 pedestrians, along with several hours that were in excess of 200 pedestrians crossing per hour.[31] Not only was the treatment functional and aesthetically pleasing,[32] it serves a high level of latent crossing demand that existed.

[31] Data provided by the City of Scottsdale, Arizona Traffic Department
[32] The Scottsdale Two-Stage Pedestrian Crossing was winner of the FHWA Office of Safety's Countermeasures Photo illustrating the PHB as one of the nine proven safety countermeasures, USDOT, January 2013, http://safety.fhwa.dot.gov/newsletter/photo_winners.cfm, accessed August 26, 2014

7.2.10 Illumination

At certain locations, site characteristics can make a crosswalk difficult for the driver to see at night or in dusk/dawn settings. Trees, shadows or glare from nearby buildings, and roadway alignment can all affect the ability of approaching drivers to see a crosswalk and the pedestrians who use it. Adding illumination can improve the visibility of crossing pedestrians and the safety of such crosswalks.

Elvik and Vaa (2004) reviewed 38 studies comparing the impact of lighting on previously unlit roads and found a 64% reduction of total fatal crashes, 28% reduction in total injury crashes and 17% reduction in total property damage-only crashes after the roadways were lit, and is one of the primary sources for the 2012 FHWA Lighting Guide.[33] The "Handbook of Road Safety Measures" (2004) documented a study that compared intersections with and without lighting that resulted in a crash reduction factor (CRF) of 38% for all nighttime crashes, and a 42% CRF for nighttime vehicle/pedestrian crashes. The study did not specify the area type (rural vs. urban) or evaluate the impact of various lighting levels on pedestrian nighttime safety. Ye et.al. conducted a study of lighting at rural intersections in Georgia and found a 44% reduction in nighttime vehicle/pedestrian crashes with intersection illumination.[34]

Traditional midblock crossing lighting layout

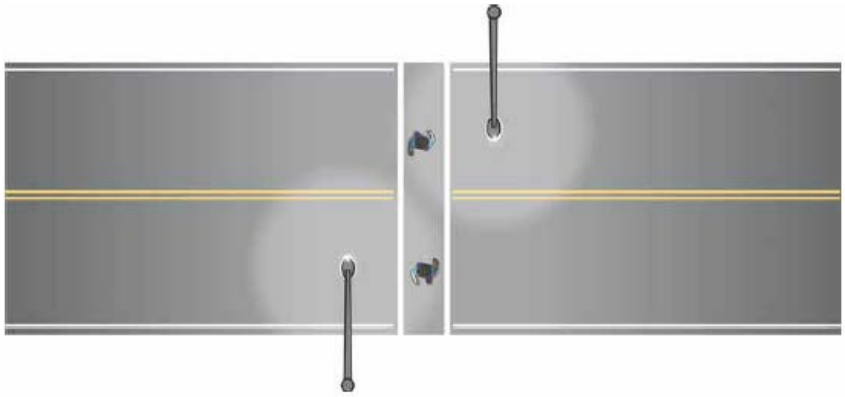

New design for midblock crosswalk lighting layout

Figure 8. Traditional and Recommended Street Light Placement for Crosswalks from the 2012 FHWA Lighting Handbook

[33] Elvik, R. and Vaa, T., "Handbook of Road Safety Measures." Oxford, United Kingdom, Elsevier, (2004).
[34] Ye, X., R.M. Pendyala, S.P. Washington, K. Konduri, and J. Oh (2008). A Simultaneous Equations Model of Crash Frequency By Collision Type for Rural Intersections, 87th Annual Meeting of the Transportation Research Board, TRB 2008 Annual Meeting CD-ROM.

Agencies have historically installed a single luminaire directly over the crosswalk as shown in Figure 8 (top diagram). While this provides high pavement luminance at the crosswalk, it does not optimally illuminate the pedestrian. Based on information provided in the 2012 FHWA Lighting Handbook[35], the luminaires should be located such that the vertical illuminance on the pedestrian makes them visible at a sufficient distance. Based on an assessment performed to select the luminaire, the luminaire should be located so that it provides about 20 vertical lux at the crosswalk. In the installation shown in Figure 8 (bottom diagram), the luminaire is located at least 10 ft in advance of the crosswalk. For roadways that have traffic traveling in both directions, particularly those without a center median, two luminaires are recommended, one located on either side of the road and placed in advance of the crosswalk from the drivers' perspective.
In addition to lighting placement, a concept of adaptive lighting can be used to more efficiently provide additional lighting when it is needed most. The adaptive lighting can be provided on a time of day basis or can be actuated by pedestrian presence. A recent study in Las Vegas by Nambisan et al, evaluated a midblock crosswalk illumination system with automatic pedestrian detection devices.[36] The "smart lighting" system detected the presence of pedestrians that were using the crosswalk and activated additional lighting during their time within the crosswalk. This strategy was used to address problems related to motorists' failure to yield and the high proportion of nighttime crashes, and it was thought to be more effective in capturing the attention of approaching drivers than the use of continuous high-intensity lighting in the crosswalk.

Researchers studied the results of the "smart lighting" (adaptive lighting) based on two measure-of-effectiveness (MOE) categories: safety MOEs, including pedestrian and motorist behaviors, and mobility MOEs, consisting of pedestrian and vehicle delay. Results indicated that safety MOEs improved with adaptive lighting. The percent of increase in the diverted pedestrians from the before to the after condition was reported as statistically significant, as was the decrease in the proportion of pedestrians trapped in the roadway and an improvement in motorist yielding behavior. Adaptive lighting treatments have proven to be energy efficient and have the opportunity to improve pedestrian safety.

7.2.11 Midblock Bicycle Crossing Treatments

Most crossing treatments for pedestrians will also accommodate bicycle crossings. The one exception that may not be appropriate is two-stage pedestrian crossing islands that may require too much maneuvering for bicyclists. It is also important that median islands designed to accommodate bicyclists be wide enough to store the largest bicycles that use the crossing, that may include bicycles with a trailer. If push buttons are used to activate beacons (RRFBs or PHBs), they must be placed where a bicyclist can easily reach the button without dismounting their bicycle. Bicycles when ridden in crosswalks do not have the same legal rights as pedestrians unless they dismount and walk their bicycle across the street. However, there is no requirement for the bicyclist to dismount and walk their bicycle in a marked or unmarked crosswalk, but when riding they must yield to motor vehicles on the road.

Tucson has been experimenting with a modification to the PHB that will better accommodate bicyclists and have been used at trail crossings and bicycle boulevard crossings of major streets. The BikeHAWK moves bicyclists to cross on one side of the road (Figure 9) in the extension of the bike route adjacent to the marked crosswalk, and it provides special controls for bicyclists so they do not attempt to cross when motor vehicles on the main street are allowed to proceed (Figure 10). It is important to separate bicycle and pedestrian travel paths in the crossing.

---

[35] FHWA Lighting Handbook, Paul Lutkevich, Don McClean, and Joseph Cheung, prepared by Parsons Brinkerhoff for FHWA, August 2012
[36] Nambisan, S.S., S.S. Pulugurtha, V. Vasudevan, M.R. Dangeti, and V. Virupaksha. (2009). "Effectiveness of Automatic Pedestrian Detection Device and Smart Lighting for Pedestrian Safety." In *Transportation Research Record 2140,* Transportation Research Board, National Research Council, Washington, DC.

Figure 9. BikeHAWK Treatment from the Driver and Bicyclist Perspective

Figure 10. BikeHAWK Signs and Signals for Bicyclists

Bicyclists know they can cross a major street in far less time than a pedestrian, thus a bicyclist may be tempted to enter the street during the late stages of the countdown when the PHB is flashing red for motorists (allowing motorists to proceed after stopping). A sudden entry into the crossing by a bicyclist is not expected by motorists during this time. If something is NOT done to eliminate bicyclists "late" their entry into the crossing (during the flashing red), a bicyclist crash problem may result. The BIKES OK and BIKES WAIT sign is used to provide a clear and separate message to bicyclists, with the BIKES WAIT sign displayed during the motorist flashing red interval. Extending the duration of the solid red signal for motorists into the countdown period also helps to provide a higher level of safety and service for bicyclists who attempt to cross after the Walk signal has terminated.

While the BikeHAWK may be an experimental device, virtually all of the features used to create this treatment are contained in the MUTCD. Currently two BikeHAWKs are have been built in Tucson and are under evaluation. Tucson plans to install several more BikeHAWKs in the future.

7.2.12 Bicycle Signals

There are occasions where traffic signals for bicycles may be needed to accommodate unique bicycle movements or to communicate unique signal timing requirements to bicyclists. Bicycle signals are common in Europe but have only seen limited use in the US since they are not included in the MUTCD. Experimental bicycle signals in the US have been used to provide for separate control of the bicycle movement and address one or more of the following situations:

1. Bicyclist non-compliance with the previous traffic control;
2. Provide a leading or lagging bicycle interval;
3. Continue the bicycle lane on the right-hand side of an exclusive turn lane that would otherwise be in non-compliance with Paragraph 6 of Section 9C.04 of the MUTCD;
4. Augment the design of a segregated counter-flow bicycle facility;
5. Provide an increased level of safety by facilitating unusual or unexpected arrangements of the bicycle movement through complex intersections, conflict areas, or signal control.

Some Arizona cities, such as Tucson has been using bicycle signals for unique applications such as their Toucan Crossings for several years (Figure 11).

Figure 11. Bicycle Signal at a Toucan Crossing in Tucson, AZ

Provisions for bicycle signals or bicycle signal faces are not in the 2009 MUTCD, but the FHWA did adopt an interim approval for bicycle signal faces on December 24, 2013, which will be in effect until official guidance is adopted.[37] The National Committee on Uniform Traffic Control Devices has approved proposed language for the design, installation and operation of bicycle signals that is under review for potential adoption in a future MUTCD. The use of bicycle signals will allow agencies greater flexibility in bicycle facility design and operation. The conditions for the use of bicycle signals under the FHWA interim approval are as follows:

[37] Memorandum from Jeffery A Lindley, Associate Administration for Operation to all Division Engineers, MUTCD Interim Approval for Optional Use of Bicycle Signal Face (IA-16), FHWA, USDOT, December 24, 2013.

- The jurisdiction must submit a written request to the Office of Transportation Operations. A State may request Interim Approval for all jurisdictions in that State. Jurisdictions seeking permission to use bicycle signal faces under this Interim Approval must agree to:
    - Comply with the technical conditions detailed in the interim approval memorandum, and
    - Maintain an inventory list of all locations where bicycle signal faces are installed, and
    - Agree to restore the site of the interim approval to be in compliance with the final ruling within three months from the time of adoption (Item D in Paragraph 18 of Section 1A.10), or terminate the use of the device if significant safety concerns are directly or indirectly related to the experimental traffic control device.[38]

7.2.13 Bicycle Detection at Traffic Signals

One important issue for bicycles at actuated or semi-actuated traffic signals is for the ability of a bicyclist to call the signal for a crossing interval. Without a means of detection, the bicyclist may not get a green signal to cross. Section 9D.02 of the 2009 MUTCD requires agencies to review and adjust signal actuation on bikeways to consider the needs for bicyclists, stating "*On bikeways, signal timing and actuation shall be reviewed and adjusted to consider the needs of bicyclists*". The 2013 Traffic Control Devices Handbook indicated there are two major types of bicycle actuation; active detection (such as bicyclist pushbuttons) or passive detection (in-pavement loops, radar, video, microwave, etc).

California passed state law 21450.5[39] effective January 1, 2008 requiring new actuated traffic signals installed after January 1, 2008 (or those actuated signals where pavement detector loops are replaced) to be able to detect motorcycles and bicycles lawfully on the road as soon as Caltrans could develop a policy to implement the law. Caltrans adopted Traffic Operations Policy Directive 09-06[40] for the implementation of the state law in August 2010, and noted three types of detection technology approved for use for bicycle detection in California; in-pavement detection (Type D inductive loop), video detection and bicycle push buttons.

Bicycle push buttons have some disadvantages, including the need to place the push buttons in a location where the bicyclist does not need to leave the bikeway, dismount their bicycle or lean over to activate the button. Unfortunately this often results in the push button being placed in a location vulnerable to damage by errant vehicles or turning trucks/buses. A push button is not accessible if placed along the right curb if a bike lane is separated from the curb by a right turn lane or if the bicyclist is in the left lane intending to turn left. Thus, the use of bicycle push buttons is often limited.

Active bicycle detection at traffic signals can be in the form of in-pavement loops, video, microwave, ultrasonic or passive acoustic sensors.[41] In-pavement detectors should be specially tuned or adjusted to sense a bicycle presence. The predominate type of active bicycle detection being used in the MAG Planning Area is video detection along with in-pavement loops. While being more expensive than loops, video detection offers the greatest flexibility and often the same video cameras used to detect used for motor vehicles can be used to detect bicyclists. If the detection requires bicyclists to stop in a specific spot to assure detection, pavement markings or signs should be used to designate that location (Figure 12).

---

[38] Memorandum from Jeffery A Lindley, Associate Administration for Operation to all Division Engineers, MUTCD Interim Approval for Optional Use of Bicycle Signal Face (IA-16), FHWA, USDOT, December 24, 2013.

[39] V C Section 21450.5 Traffic Actuated Signals Detection of Motorcycles and Bicycles, Ca.gov, California Department of Motor Vehicles, https://www.dmv.ca.gov/pubs/vctop/d11/vc21450_5.htm, accessed August 26, 2014

[40] Traffic Operations Policy Directive 09-06 Implementation memorandum by Division of Traffic Operations Chief, Robert Kopp, August 19, 2010, http://www.dot.ca.gov/hq/construc/CPDirectives/Attachment_1_TOPD_Implementation_Memo.pdf, accessed August 26, 2014

[41] ITE Traffic Control Devices Handbook, 2nd Edition, ITE, Washington, DC, Chapter 14, Bicycle Facilities, 2013

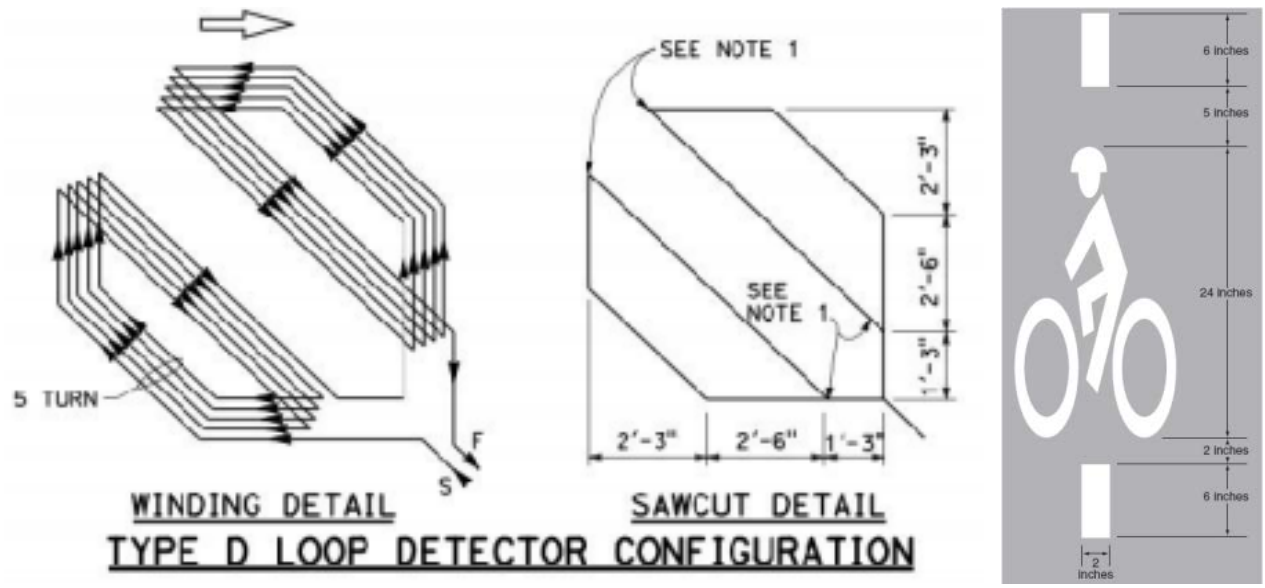

Figure 12. Bicycle Detector Loop Pattern and Detector Pavement Marking from the MUTCD (Figure 9C-7)

7.2.14 Traffic Signal Timing for Bicyclists

Bicyclists typically cross a traffic signal during the same phases as motor vehicle traffic, and for many intersections, the signal timing provided for motor vehicles is adequate for bicycles. However, for wide intersections or for single point interchanges (SPDI), bicyclists will require more time to clear the signal. While Section 9D.02 of the MUTCD requires agencies to review and adjust signal timing on bikeways to consider the needs of bicyclists, Section 4D.26 requires that the duration of the yellow change interval and red clearance interval shall not vary on a cycle-by-cycle basis within the same timing plan. Since bicyclists are permitted to ride on all public streets within the MAG Planning Area (except interstate freeways), traffic signals should be designed to accommodate bicycle traffic. There is an issue with crossing of wide arterial streets, particularly side streets that may be actuated to minimize disruption of main street traffic flow. There needs to be a minimum green time, coupled with the yellow change interval and all-red clearance interval to accommodate side street bicycle traffic and allow them to safely cross or turn left onto the arterial street from a stopped position.

California adopted a table providing minimum green times (in addition to yellow change and all-red clearance intervals) to accommodate a bicycle that is 6 feet long and travelling at 14.7 ft/sec to clear an intersection from a stopped position on a side street based on different crossing widths effective September 2009.[42] Since then, some agencies within MAG Planning Area (such as Mesa[43] and Phoenix[44]) have similarly instituted their own program of providing minimum green times based on crossing street width to accommodate bicycles at traffic signals (using the Arizona definition of an intersection).

---

[42] State of California, Department of Transportation Traffic Operations Policy Directive TRR-0011, issued August 27, 2009 and effective September 10, 2009, Attachment 1

[43] Mesa, Arizona Traffic Operations Memo from Derrick Baily, ITS Engineer on Minimum Green Times, September 8, 2010

[44] Memo from Joseph Perez to Thomas Godbee, Bicycle Minimum Green times at Traffic Signals, Phoenix Street Transportation Department, Phoenix, AZ, August 22, 2012

7.3 CONNECTED VEHICLE DEVELOPMENT

The United States Department of Transportation (USDOT) Research and Innovative Technology Administration (RITA – now the Office of the Secretary) and ITS Joint Program Joint Program Office (ITS JPO) have been the major sponsors of the Connected Vehicle program. Connected Vehicle development focuses on localized Vehicle-to-Vehicle, Vehicle-to-Infrastructure and Vehicle-to-Device Systems (V2X) to support safety, mobility and environmental applications using vehicle Dedicated Short Range Communications (DSRC) and Wireless Access for Vehicular Environments (WAVE)[45]. This program has support from most of the automakers and a number of state departments of transportation.

Connected vehicles offer the potential to transform the way that mobility can be managed in future transportation systems. The USDOT targets revolutionary approaches, methodologies, and breakthroughs to greatly improve the safety and efficiency of highway transportation based on the connected vehicle paradigm. A cornerstone of the V2V safety program is low-latency, wireless communication between vehicles. The USDOT has been researching, developing, and testing 5.9 GHz DSRC to provide this communication. The National Highway Traffic Safety Administration (NHTSA) has announced their intention to move forward with the rule making process that might result in vehicles manufactured in the United States to be equipped with this DSRC technology. If the process goes as industry representatives estimate, the 2020 vehicle fleet may be sold with this technology onboard.

7.3.1 Connected Vehicle Applications

The USDOT is facilitating the development and evaluation of various connected vehicle applications and technologies as illustrated in Table 2[46]. Specific applications can be deployed to suit specific scenarios to meet desired objectives.

Table 2. Connected Vehicle Applications

V2I Safety	**Environment**	**Mobility**
Red Light Violation	Eco-Approach and Departure at Signalized Intersections	Advance Traveler Information System
STOP Sign Gap Assist	Eco-Traffic Signal Timing	Intelligent Traffic Signal System
Curve Speed Warnings	Eco-Traffic Signal Priority	Signal priority
Reduced Speed/Work Zone Warning	Connected Eco-Driving	Mobile Accessible Pedestrian Signal System
Pedestrian In Crosswalk Warning	Eco-Lanes Management	Dynamic Speed Harmonization
V2V Safety	Eco-Smart Parking	Queue Warning
Forward Collision Warning	Eco- Cooperative Adaptive Cruise Control	Cooperative Adaptive Cruise Control
Left Turn Assist	Eco-Ramp Metering	Incident Scene Pre-Arrival Staging Guidance for Emergency Responders
Blind Spot/Lane Change Warning	Eco-ICM Decision Support System	Incident Scene Work Zone Alert for Drivers and Workers
Road Weather	**Agency Data**	**Smart Roadside**
Motorist Advisories and Warning	Probe based Pavement Maintenance	Wireless Inspection
Weather Responsive Traffic Information	Probe enabled Traffic Monitoring	Smart Truck Parking

[45] http://www.itsa.org/industryforums/connectedvehicle Accessed on August 6th 2014.
[46] http://www.its.dot.gov/presentations/pdf/CV_Pilot_Sunnyside.pdf. Accessed on August 6th 2014.

One of the fundamental projects that will serve arterial safety and mobility applications is the SPaT (Signal Phasing and Timing) and Related Messages Project in which the traffic signal controller information is converted from the signal controller protocol (NTCIP) to connected vehicles using the J2735 protocol. The information transmitted included the controller status, signal status, time remaining in the existing status, a map of the intersection, etc. This is an enabler for other arterial applications involving intersections. An example of a freeway-based safety and mobility application is the development and demonstration of a Queue Warning and Speed Harmonization algorithms using connected vehicle information to more accurately and rapidly identify the formation of a queue and recommend speeds upstream of a congested area to improve safety and improve capacity.

It should be noted that most of the connected vehicle applications are in development and testing phases. Evaluation platforms are being developed to support the testing of applications. These evaluation tools are being designed to investigate the effectiveness of various applications at various levels of connected vehicle penetration (i.e., how effective is the application under different percentages of the vehicle fleet having connected vehicle technology). The platforms are also being designed to test the effectiveness of these applications at various reliability of data communication (i.e., how effective applications are with different levels of communication data packet loss).

7.3.2 AASHTO Connected Vehicle Footprint Analysis[47]

The American Association of State Highway and Transportation Officials (AASHTO) has been working on the infrastructure assessment of connected vehicles. The vision for the infrastructure footprint anticipates a mature connected vehicle environment by 2040, by which time a large majority of vehicles on the roadway will be connected. From an infrastructure perspective:

- Up to 80% (250,000) of traffic signal locations will be vehicle-to-infrastructure (V2I)-enabled.
- Up to 25,000 other roadside locations will be V2I-enabled.
- Accurate, real-time, localized traveler information will be available on 90% or more of roadways.
- Next-generation, multimodal, information-driven, active traffic management will be deployed system-wide.

7.3.3 Connected Vehicle Deployment Scenarios[48]

It is likely that the first applications to be moved into deployment test beds will be mobility applications using wireless cellular communication (e.g., 3G/4G/4G LTE). These applications offer a mobility benefit without needing the low-latency safety communication of DSRC. Thus, near-term connected vehicle applications can be introduced using existing wireless communication in the next three to five years.

In the next 10 years, it is assumed that public agencies will be motivated to deploy the field infrastructure for Connected Vehicle systems to achieve benefits from applications that enhance mobility, provide localized safety improvements, or enhance the operational performance of the agency in some manner. With the NHTSA process to require factory-installed DSRC equipment on-board both light and heavy vehicles by 2020, it becomes a “chicken-and-egg” situation to fully achieve the benefits of connected vehicles. While it can be said that the benefits to drivers of vehicles with on-board equipment (OBE-equipped passenger cars and heavy vehicles) will increase as the deployment of roadside equipment increases, it is also true that there are no benefits to the deployers of this infrastructure if there are no equipped vehicles with which to communicate. Therefore, in order to encourage near-term deployment of DSRC roadside infrastructure, it is anticipated that state and local agencies will pursue the following approaches.

[47] http://ntl.bts.gov/lib/43000/43500/43514/FHWA-JPO-11-090_AASHTO_CV_Deploy_Analysis_final_report.pdf Accessed on August 7th 2014.
[48] http://ntl.bts.gov/lib/43000/43500/43514/FHWA-JPO-11-090_AASHTO_CV_Deploy_Analysis_final_report.pdf Accessed on August 7th 2014.

- Focus on the deployment approaches and appropriate applications that meet the needs of potential early deployers, such as commercial vehicles, transit vehicles, and emergency and public safety vehicles.
- Focus on the deployment approaches and appropriate applications that can satisfy operational objectives of an agency and can be met by using equipped vehicles that are controlled by the agency, such as agency fleet vehicles, maintenance vehicles, and other specialized vehicles.
- Focus on applications that are of interest or importance to agencies and where the end-users have a strong incentive to obtain the necessary devices to participate. These may include location-specific safety applications or fee collection applications.
- Focus on approaches that lead to the early deployment of retrofit, aftermarket, and other consumer devices that operate within Connected Vehicle systems and emphasize applications that are of interest to state and local agencies and that will function effectively with these devices.

7.3.4 Safety Pilot Model Deployment

The Safety Pilot Model Deployment is an important part of the USDOT Connected Vehicle research program. It involves a large-scale test of connected vehicle technologies in a real-world, multi-modal setting in Ann Arbor, Michigan. The program is evaluating the effectiveness of connected vehicle safety applications at reducing crashes and will show how drivers respond to these technologies while operating a vehicle. Safety Pilot equipped more than 2,800 cars, trucks, and buses with one or more of the following devices: vehicle awareness device, aftermarket safety device, and/or retrofit safety device. Safety Pilot also outfitted 21 signalized intersections, three horizontal curve locations, and five freeway locations, resulting in over 73 miles of instrumented roadways. The model deployment collected one year of data for the evaluation of safety benefits. Subsequently, the USDOT had been working with the Safety Pilot lead, University of Michigan Transportation Research Institute (UMTRI), on continuing the operation of the connected vehicle environment beyond the Safety Pilot project.

Under this continuation, UMTRI is working on connected pedestrian and connected motorcycle applications. The pedestrian application is intended to reduce pedestrian-vehicle crashes for the most common pre-crash scenarios involving pedestrians. The concept of the pedestrian crosswalk warning system would be to detect a pedestrian in a mid-block crossing zone, provide a warning to approaching motorists, and terminate the warning when the pedestrian has left the crossing zone. This application would use a personal device, such as GPS-equipped cellular telephones. Smartphones could transmit a Bluetooth signal to the intersection which in turn could be transmitted via a DSRC device to a dynamic warning sign or a potential in-vehicle warning. The in-vehicle warning would only be provided if the projected paths of the vehicle and pedestrian intersect within a specified time and distance tolerance.

7.3.5 Status of Other State and Local Activities

The following state and local agencies are some of the agencies conducting Connected Vehicle activities within their regions:

- Minnesota is focusing on demonstrations for in-vehicle signing and traveler information systems; stop sign assist using DSRC; and mileage-based user fees using GPS. Mn/DOT is also investigating a roadway departure system using high-accuracy GPS.

- Caltrans has already installed fifteen RSE units along freeways and at signalized intersections for Connected Vehicle applications. Caltrans is also investigating the possibility of variable speed programs, and eco-friendly driving applications.
- Idaho DOT recently developed a Connected Vehicle Concept of Operations for Eastern Idaho, incorporating current and planned roadside equipment, fleet vehicles and its communications infrastructure. The concept includes Connected Vehicle applications in the areas of road-weather information and weather alerts, pavement condition monitoring, incident management, safety alerts, real-time traveler information, dynamic route guidance, and animal avoidance alerts.
- New York State DOT has conducted multiple deployments for commercial and heavy vehicle applications, including those showcased at the 2008 World Congress in New York City. The New York Commercial Vehicle-Infrastructure Integration (CVII) program includes the use of DSRC for driver identification, wireless roadside safety inspections, and commercial vehicle advisories. Eco-driving and dynamic mobility for real-time routing are under consideration for future expansion areas.
- Maricopa County, Arizona and Arizona DOT developed and prototyped a signal priority application for multiple emergency response vehicles at an intersection in the field. They also tested applications to support V2V communications and traveler information in a laboratory environment. The County is also interested in using Connected Vehicle data to develop speed maps and improve signal coordination. ADOT also completed a study to develop a Concept of Operations for dynamic routing of emergency vehicles using the Connected Vehicle platform.
- Washington State DOT has over half of its snow plow fleet equipped to provide probe data on weather and surface status for winter operations, and then turns this data into traveler information on mountain passes and road closures. WSDOT is also designing open-road tolling and CVO pre-screening programs.
- Michigan DOT is developing a Data Use Analysis and Processing (DUAP) system to acquire and use Connected Vehicle data in the management and operations of the transportation system. The system includes data collection from highway infrastructure state and federal test beds, and fleet vehicles, including a soon to be deployed Vehicle-based Information and Data Acquisition System (VIDAS).
- Metropolitan Transportation Commission in the San Francisco Bay Area has completed an analysis of the potential uses of Connected Vehicle technologies for supporting High Occupancy Toll (HOT) lane operations.

It is anticipated that the next significant advances will come from the USDOT Connected Vehicle Deployment Program. A request for information was conducted by the USDOT in 2013. Indications are that a full request for applications/proposals will be issued in early 2015. State and local agencies wanting to be early adopters of the connected vehicle technology will likely pursue and compete for these deployment funds. Other state and local agencies should closely monitor the following connected vehicle issues:

- The USDOT Connected Vehicle Reference Architecture and equipment specification development
- Lessons learned from early connected vehicle test beds
- Capital, operations, and maintenance funds to deploy and operate connected vehicle environments

- The safety and mobility needs that connected vehicle technology can help solve for local and state agencies in a particular region

7.4 EMERGENCY VEHICLE PREEMPTION (EVP)

Through a federal initiative called "Connected Vehicles", the U.S. Department of Transportation (USDOT) is working to leverage Intelligent Transportation Systems (ITS) technology to improve public safety and surface transportation mobility. The Maricopa County Department of Transportation (MCDOT) and its partners, the Arizona Department of Transportation (ADOT) and the Federal Highway Administration as well as the University of Arizona, are moving this initiative forward to develop and demonstrate advanced ITS applications that integrate vehicles together with Systematically Managed ARTerial (SMART) roadway systems in Maricopa County.

In 2012, MCDOT launched the vehicle integration concept in a field test application on Daisy Mountain Drive in Anthem, Arizona to demonstrate the capabilities, evaluate the benefits, and provide a test bed for future SMARTDrive applications. MCDOT's testing is leading research in emerging technologies to fine tune traffic control systems to have two-way communication with emergency vehicles, and the vehicles will be in communication with one another. When one or more emergency response vehicles are approaching an intersection from different directions, the SMARTDrive Intelligent Traffic Signal System will selectively prioritize and notify all approaching emergency vehicles which vehicle has the right-of-way, significantly improving both intersection operation and safety.[49]

Currently, EVP is installed at a number of signal-controlled intersections throughout the MAG planning area that are independently controlled and operated by individual jurisdictions. Because the EVP equipment may be purchased from different vendors, if operated in a "coded" system, the EVP will not respond to emergency responders using a different system. This is an issue particularly along borders since the emergency responders do not typically recognize borders. Another issue is with individuals illegally purchasing transponders that will activate the EVP if operated in an "open" system.

MAG is currently conducting a study to perform a comprehensive review of the current Emergency Vehicle Preemption (EVP) practices within the MAG region and across the country, to determine the best practices, and to develop a recommended practice for the region to follow. Technologies involved include the communications between emergency vehicles and traffic controllers, signal indications, confirmation indications, etc. The fundamental concept of intersection EVP is to implement a temporary traffic signal timing scheme that would provide a safer and quicker path to an approaching Fire vehicle or Emergency Medical Services (EMS) vehicle. The manner in which the traffic signal timing is implemented allows for other vehicles at or near the intersection to clear the path of the EMS vehicle, preventing movements that would potentially conflict with an approaching EMS vehicle. The EVP study will outline the best practices, including analysis of the practices in terms of benefits in safety, emergency response time, mobility and other measures of effectiveness.

[49] http://www.mcdot.maricopa.gov/news/InTheNews/SMARTDrive-Test.htm Accessed on August 20th 2014.

7.5 SAFER WORK ZONES

Ensuring the safety of both motorists and workers in roadway work zones has long been a stated goal of essentially all road agencies and road contractors nationwide. However, work zones themselves are also recognized as areas of increased risk for crashes relative to pre-work zone conditions. Two key reasons exist for this increased risk:

1. Work zones occur because of the need to regularly maintain and upgrade roadways. This work requires equipment, materials, and personnel be temporarily introduced into the roadway environment. Even if nothing else changes and the work occurs outside of the active travel lanes, simply adding those items in the roadway environment increases the likelihood of a crash event in the event that a vehicle accidentally leaves the roadway and would have otherwise simply regained control and returned to the travel lanes.
2. However, many work zone activities disrupt normal traffic operations occurring on the roadway, and these disruptions may surprise drivers (i.e., violate their expectancy) and could result in crashes. Traffic slowdowns on facilities that normally operate at higher speeds, due to temporary lane closures or to work vehicles/equipment entering and exiting the work space at a much lower speed, are common examples of these driver expectancy violations. Temporary re-alignments of travel lanes due to lane shifts or detours are other examples. Closures of ramps, intersections, or driveways that drivers had expected to be open are yet other examples. It is well-accepted that driver expectancy violations are a key contributor to work zone crashes.

In recent years, technologies and strategies to mitigate these types of exist have been developed around two primary topic areas:

- Methods of reducing motorist exposure to the various work zone hazards that exist
- Methods of increasing motorist awareness of the work zone hazards

A summary of the strategies/technologies now available under each of these areas is provided in the following sections.

7.5.1 Reducing Motorist Exposure to Work Zone Hazards

Obviously, reducing the amount of exposure that motorists have to particular hazards in the work zones is one of key methods available to mitigate crashes. Reducing overall work zone durations through accelerated construction techniques and contracting incentives, using full road closures with detours when feasible, and encouraging use of longer-lasting materials that reduce the frequency of maintenance efforts over the life-cycle of the roadway are all encouraged by FHWA and considered by many agencies on a project-by-project basis. (The FHWA Work Zone Management website http://ops.fhwa.dot.gov/wz/index.asp is a good resource for additional information on these techniques.) Nationally, there are also a number of recent technological advances introduced and seeing increased adoption nationally that pertain to this topic area. These include:

- Self-Propelled Modular Transport (SPMT) use to facilitate rapid bridge replacement projects
- Using Safety Edge$_{SM}$ technology during work zone resurfacing operations
- Barrier innovations that allow for increased use of positive protection around work zones
- Application of road safety audit techniques to work zones

Use of a Self-Propelled Modular Transport (SPMT) technology to facilitate rapid bridge replacement was first identified in a 2004 FHWA International Scan of Prefabricated Bridge Elements and first occurred in Florida in 2006. Rather than demolish and reconstruct a bridge in place over several weeks or months, which typically involves considerable disruptions to traffic using the bridge as well any traffic on a facility being crossed over, the use of this technology allows the replacement bridge to be constructed nearby but off of the roadway. The SPMT is then used to remove the old bridge in one piece, and then move the new bridge (also in one piece) back into the intended bridge location.

The second technology that falls under this category is the application of the Safety Edge$_{SM}$ technology. Safety Edge$_{SM}$ was developed as a solution to run-off-the-road pavement edge drop-off overturn crashes that often result in severe injuries and fatalities. As shown in Figure 13[50], the device attaches to the edge of an asphalt paving machine and creates a 45 degree bevel on the edge rather than a vertical edge. The benefits of the technology in reducing run-off-the-road overturning crashes have been documented.[51] Although designed to address permanent pavement edge drop-off problems, overlay projects also struggle with the safety issues caused by uneven lanes during the repaving process. Most agencies limit the difference in heights between adjacent lanes to less than 2 inches. However, concerns still exist about the safety of this difference in lane heights, especially for motorcycles and smaller vehicles. Consequently, the Ohio DOT recently applied the Safety Edge technology on an overlay project to maintain a 45 degree beveled edge between adjacent lanes during the project. Although data on actual safety benefits during the project are not available, it is expected that loss of control crashes in the work zone during the repaving operation were at least partially mitigated with the technology.

Figure 13. Example of the Safety Edge$_{SM}$

Significant innovations in work zone positive protection have been made in recent years as another way to reduce work zone exposure. Federal regulations were updated in 2008 to increase emphasis on the consideration of use of positive protection in work zones, and to ensure that it is adequately funded as part of the project bidding process.[52] Nationally, various designs of safety-shaped portable concrete barrier (PCB) continue to be the predominant positive protection device used in work zones. However, this technology requires significant effort to deploy and move and so is only feasible for use at long-term construction and maintenance projects. Moveable barriers have also existed for some time in reversible lane operations, and have also been deployed in several work zones to allow a lane to be closed and reopened daily. However, that technology also requires a lengthy initial deployment time and so has also been limited to long-term projects.

In recent years, a few barrier manufacturers have steel and steel/concrete barrier systems available that are slightly lighter than PCB, but can still redirect errant vehicles and do provide some positive protection. Some of the technologies have wheels to allow them to be easily moved out during deployment. The wheels are

[50] Safety Edge. Accelerating Innovation, FHWA, U.S. Department of Transportation, Washington, DC. Accessible at http://www.fhwa.dot.gov/everydaycounts/technology/safetyedge/description.cfm.
[51] Graham, J.L., K.R. Richard, M.K. O'Laughlin, and D.W. Harwood. *Safety Evaluation of the Safety Edge Treatment*. Report No. FHWA-HRT-11-024. FHWA, US. Department of Transportation, Washington, DC, March 2011. Accessible at http://www.fhwa.dot.gov/publications/research/safety/11024/11024.pdf.
[52] Temporary Traffic Control Devices. Code of Federal Regulations, Chapter 23 Part 630 Subpart K. Revised December 5, 2007. Acessible at http://www.ecfr.gov/cgi-bin/retrieveECFR?gp=&SID=7aa7ccd0b89e2e4bbff0fc53ba61a7a6&r=PART&n=23y1.0.1.7.21#23:1.0.1.7.21.10.

then retracted until the work activity is completed, at which time the wheels are lowered and the barrier moved out of the way. Figure 14 illustrates this technology[53].

Figure 14. Example of Steel Barrier Use for Work Zones

Although easier to load/unload and move around within a work zone than PCB, steel barrier still requires some amount of time to deploy and remove, and so is not an extremely feasible approach to address very short-duration events lasting only a few hours or less. Many short duration activities require workers to be out very close to traffic and without a means of escape, and so protection for those types of situations is still a concern. One company has developed a feasible approach to protecting these types of conditions, using a semi-tractor trailer to tow a mobile barrier into place when and where needed. Figure 15 illustrates the mobile barrier in use.

Figure 15. Examples of Mobile Barriers in use[54]

Another protection technology recently developed and being sold is that of a trailer-mounted attenuator. Truck–mounted attenuators have been in existence for many years, and their effect worker and traveling public safety has been documented. However, truck-mounted attenuators have traditionally been designed to be attached to a specific vehicle that is designated as a shadow vehicle for all work operations. For smaller agencies with only a few vehicles, designating a vehicle to a single task (important as it may be) creates some challenges from a productivity standpoint. To address these challenges, a few attenuator manufacturers have developed and are selling trailer-mounted attenuators. These attenuators can be attached to any vehicle with a hitch, so may be used with one type of vehicle at a work zone on one day, with another vehicle on the second day, and so on. Figure 16 illustrates several types of trailer-mounted attenuators.

[53] Ullman, G.L., M.D. Finley, and L.Theiss. *Work Zone Intrusion Countermeasure Identification, Assessment, and Implementation Guidelines*. Report No. FHWA/CA10-1102. Texas A&M Transportation Institute, College Station, TX, May 2010. Accessible at http://www.dot.ca.gov/newtech/researchreports/reports/2010/final_report_task_1102.pdf.
[54] Mobile Barriers, LLC. Golden, CO. Accessible at http://www.mobilebarriers.com/.

Figure 16. Examples of Trailer-Mounted Crash Attenuators

7.5.2 Increasing Motorist Awareness of Work Zone Hazards

The second category of innovations seeing increased application in work zones are those pertaining to the improvement of motorist awareness of work zone hazards or changing conditions. The intent is to reduce/eliminate violations of driver expectancy, helping them be more ready to react to the work zone conditions ahead. Several technologies and strategies are seeing increased use nationally to improve safety in this manner.

One of the major technologies seeing more regular use nationally is that of work zone intelligent transportation systems (WZ ITS). Historically, this term has been used to refer to self-contained systems comprised of solar-powered traffic sensors, wireless (cellular) communications, cellular or wifi-enable portable changeable message signs (PCMS), and a central processing unit. The processing unit assimilates sensor data being sent in real-time to assess queue and delay presence on a roadway, uses that data to select from a predetermined library of PCMS messages, and issues message display commands about current delay/congestion levels to the appropriate PCMS to be read and reacted to by approaching drivers. Also often termed "smart work zone systems," they are manufactured and sold by several vendors nationally. A few photographs of these typical smart work zones are shown in Figure 17.

(a) Sensor trailer (b) PCMS with cellular communications to processing unit

Figure 17. Typical Smart Work Zones Components

Since they are providing real-time information instead of a generic “expect delays” or similar message, it is believed that they are more credible to motorists and so result in improved (safer) driver behavior.

Another focused WZ ITS technology that is receiving significant attention is that of highly-portable queue warning systems. Operating similarly to the traditional smart work zone systems described above, the queue warning systems are built around the deployment of highly-mobile radar sensors that can only measure vehicle speeds rather than on sensors that can measure speeds, volumes, and occupancies, normally on a lane-by-lane basis. For the queue warning system, the purpose is not to try and estimate delays, but only to detect if speeds at a location downstream are significantly lower (indicating that a queue has formed) and warn approaching motorists of the slowdown. Hence, simpler sensor technology can be used. The advantage to this is that such sensors can be deployed much quicker than can volume/speed/occupancy sensors, which require specialized equipment and expertise in calibrating the sensor beam. As an illustration, Figure 18 depicts the deployment of one type of radar speed sensor that is housed in a channelizing drum. All that is required is for the field person to unload the device, aim it towards oncoming traffic, and turn the device on. This adds little additional time to the deployment of a typical lane closure, or to its subsequent removal when the lane closure is complete, making it very applicable to maintenance-type activities.

Figure 18. Deploying Self-Contained Speed Sensors and Location-Specific Queue Messages for Highly-Portable Queue Warning Systems

Variable speed limit (VSL) systems are another way that WZ ITS attempts to mitigate severe rear-end crashes due to work zone queues. For VSL systems, the intent is to convey that slower speeds are required ahead, smoothing out large speed differentials between approaching and queued traffic. TTI is currently evaluating the potential effectiveness of VSL technology in work zones for TxDOT.

The FHWA WZ ITS guidance emphasizes the importance of identifying user needs before choosing to deploy WZ ITS, and also when deciding what WZ ITS to deploy. It also emphasizes the value of using and enhancing existing permanent transportation management center (TMC) resources, if available, for work zone safety and mobility purposes. Given that many metropolitan areas now have operational TMCs, it often

makes more sense to design and implement specific ITS components to address work zone safety needs and tie them temporarily or permanently into existing TMC operations rather than design, purchase, and deploy a smart work zone system that does not operate in conjunction with the overall TMC activities.

Figure 19. Example of an Electronic Work Zone Speed Limit Sign

Although not relying on traffic sensors and automated decision-making algorithms, the use of electronic speed limit signs in lieu of static signs for work zones is also receiving attention in Texas and elsewhere as a tool to improve the credibility of the speed limits with motorist and thus improve compliance (and presumably, safety). Electronic speed limits allow an agency or contractor to change the speed limit according to approved rules and regulations when a reduced speed limit is required in the work zone, and then change it back to its normal speed limit when the need is no longer present. In this way, drivers are provided with realistic information about the need to slow down when necessary through the work zone, and not required to do so when no need exists[55]. Displaying a speed limit that is much lower than needed for conditions typically experiences very poor compliance and ultimately leads to decreased respect for traffic control devices in general by the driving public. Figure 19 illustrates an example of electronic speed limits. Scottsdale will be installing variable speed limit technology on Camelback Road east of Scottsdale Road for a reduced (25 mph) speed limit during hours of high congestion, typically Friday and Saturday evenings. The equipment will be installed in the fall. Some agencies have also tried to increase the conspicuity of static speed limit signs as a way to increase driver compliance and increased safety. On the I-35 corridor in Texas, static work zone speed limit signs have been outlined by a red border, as shown in Figure 20.

Figure 20. Use of Red Border on Work Zone Speed Limit Signs

Rural multi-lane lane closures at night have been an area of concern for some agencies. Based on concepts that have been used for several years in European work zones, both Texas and Missouri have experimented with the use of sequential warning light systems with positive results[56,57]. These systems use interconnected warning lights installed on channelizing drums in the merging taper of the lane closure. At night, a higher-intensity light is pulsed in sequence along the warning lights from the upstream end of the taper to the downstream end. Radio or infrared technology is used to interconnect the warning lights (anecdotal

[55].M.D. Finley, L. Theiss, N.D. Trout, and G.L. Ullman. *Studies to Improve the Management of Regulatory Speed Limits in Texas Work Zones*. Research Report No. FHWA/TX-09/0-5561-1. Texas Transportation Institute, College Station, TX, December 2008. Accessible at http://d2dtl5nnlpfr0r.cloudfront.net/tti.tamu.edu/documents/0-5561-1.pdf.

[56] M.D. Finley, G.L. Ullman, and C.L. Dudek. *Work Zone Lane Closure Warning Light System.* Report No. TX-99/3983-1. Texas Transportation Institute, College Station, Texas, September 1999. Accessible at http://d2dtl5nnlpfr0r.cloudfront.net/tti.tamu.edu/documents/3983-1.pdf.

[57] Sun, C., P. Edara, Y. Hou, and A. Robertson. *Final Report: Cost-Benefit Analysis of Sequential Warning Lights in Nighttime Work Zone Tapers*. University of Missouri, Columbia, MO. June 2011. Accessible at http://aii.transportation.org/Documents/SEQ/WZ_SeqLights_Report_June2011.pdf.

information suggests that the radio interconnect is more dependable). These lights have also been encouraged nationally by the AASHTO Technology Implementation Group[58].

Another technology that is seeing increased utilization in work zones nationally are portable rumble strips. As shown in Figure 21, these devices are comprised of high-density rubber strips that are connected together and placed across travel lanes in advance of work zones. They are held down by their weight and do not require adhesion to the pavement surface, making them feasible for short-term work operations. Recently, TxDOT adopted traffic control standards requiring their use on all lane closure operations on two-lane highways where flaggers are required to alternate one-lane traffic flow through the work zone[59]. They are also being tested as part of short-term lane closures on freeway facilities.

Figure 21. Portable Work Zone Rumble Strips[60]

Finally, there have been efforts in recent years to develop and deploy alternatives to the use of flaggers for controlling traffic at work zones. Portable traffic signals now exist that can easily be set up and programmed to alternate one-way operations past lane closures on two-lane roads (see Figure 22). The Phoenix signal shop has one of these portable traffic signals for repair of damaged signals (from crashes) and other work where the mast arm cannot remain in place. Agencies may rent these devices when needed from area vendors.

Another technology to reduce hazard risk to flaggers is that of the automated flagger assistance device (AFAD). Although these devices do still require a flagger to be present, an AFAD allows the flagger to be positioned off of the roadway and at less risk to approaching traffic. Figure 23 depicts an example of an AFAD.

[58] Sequential Flashing Warning Lights for Work Zones (SEQ). AASHTO Innovation Initiative, Washington, DC. 2011. Accessible at http://aii.transportation.org/Pages/SequentialFlashingWarningLightsforWorkZones.aspx.
[59] Temporary Rumble Strips Standard Sheet. Traffic Operations Division, Texas Department of Transportation, Austin, TX. 2012. Accessible at ftp://ftp.dot.state.tx.us/pub/txdot-info/cmd/cserve/standard/traffic/wzrs14.pdf.
[60] Road Quake 2 Temporary Portable Rumble Strip. Plastic Safety Systems, Inc., Cleveland, OH. Accessible at http://plasticsafety.com/Products/Rumble-Strips/RoadQuake-2-Rumble-Strip/572.aspx.

Figure 22. Example of a Portable Traffic Signal

Figure 23. Example of an Automated Flagger Assistance Device (AFAD)

7.6 ACTIVE TRAFFIC MANAGEMENT (ATM)

ATM is the ability to dynamically and proactively manage recurrent and non-recurrent congestion on an entire facility based on real-time traffic conditions. Focusing on trip reliability, ATM strategies (Figure 24) maximize the effectiveness and efficiency of a facility while increasing throughput and enhancing safety. ATM strategies rely on the use of integrated systems with new technology, including comprehensive sensor systems, real-time data collection and analysis, and automated dynamic deployment to optimize system performance quickly and without the delay that occurs when operators must deploy operational strategies manually. When various ATM strategies are implemented in combination, they can work to fully optimize the existing infrastructure and provide measurable benefits to the transportation network and the motoring public. One of the benefits of these new systems is that they allow for the "dynamic" or real-time automated operation of traffic management strategies that more quickly respond to changing conditions as they occur.

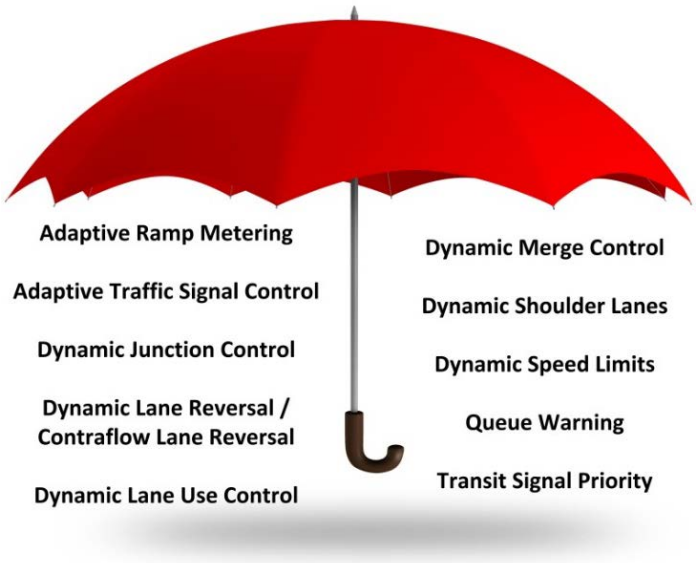

Figure 24. ATM Operational Strategies

ATM brings together operational strategies and a management philosophy to manage roadway network conditions to improve efficiency and reduce system congestion. Table 3 provides a brief definition of each ATM operational strategy.

Table 3. Active Traffic Management Strategies[61]

ATM Operational Strategy	Description
Adaptive Ramp Metering	The deployment of traffic signal(s) on ramps to dynamically control the rate at which vehicles enter a freeway facility. Can utilize traffic responsive or adaptive algorithms, dynamic bottleneck identification, automated incident detection, and integration with adjacent arterial traffic signal operations.
Adaptive Traffic Signal Control	The continuous monitoring of arterial traffic conditions and queuing at intersections and the dynamic adjustment of signal timing to optimize one or more operational objectives (such as minimize overall delays).
Dynamic Junction Control	Dynamically allocating lane access on mainline and ramp lanes in interchange areas where high traffic volumes are present and the relative demand on the mainline and ramps change throughout the day.
Dynamic Lane Reversal / Contraflow Lane Reversal	The reversal of lanes to dynamically allocate the capacity of congested roads, thereby allowing capacity to better match traffic demand throughout the day.
Dynamic Lane Use Control	Dynamically closing or opening of individual traffic lanes as warranted and providing advance warning of the closure(s) (typically through dynamic lane control signs) to safely merge traffic into adjoining lanes.
Dynamic Merge Control	Dynamically managing the entry of vehicles into merge areas with a series of advisory messages (e.g., displayed on a dynamic message sign [DMS] or lane control sign) approaching the merge point that prepare motorists for an upcoming merge and encouraging or directing a consistent merging behavior. This merge control is deployed on the main lanes, such as at a lane closure, rather than at a ramp or junction.
Dynamic Shoulder Lanes	The use of the shoulder as a travel lane(s) based on congestion levels during peak periods and in response to incidents or other conditions as warranted during non-peak periods.
Dynamic Speed Limits	The adjustment of speed limits based on real-time traffic, roadway, and/or weather conditions. Dynamic speed limits can either be enforceable (regulatory) speed limits or recommended speed advisories, and they can be applied to an entire roadway segment or individual lanes. These are also known as speed harmonization and variable speed limits.
Queue Warning	The real-time display of warning messages (typically on dynamic message signs and possibly coupled with flashing lights) along a roadway to alert motorists that queues or significant slowdowns are ahead, thus reducing rear-end crashes and improving safety.
Transit Signal Priority	The management of traffic signals by using sensors or probe vehicle technology to detect when a bus nears a signal controlled intersection, turning the traffic signals to green sooner or extending the green phase, thereby allowing the bus to pass through more quickly.

[61] "Active Transportation and Demand Management," Federal Highway Administration, accessed June 9, 2014, http://ops.fhwa.dot.gov/atdm/index.htm.

7.6.1 Reported Impacts, Level of Use in the U.S.

The deployment of ATM projects in the United States has been limited to select locations and only a few applications. The projects currently in operation are provided in Table 4. Note that the level of operations across these projects varies across the active management continuum. While in most cases these are just time-of-day, there are only a few examples of truly dynamic operations.

Table 4. Domestic Active Traffic Management Deployments[62, 63]

ATM Operational Strategy	Locations (States with Deployments)
Adaptive Ramp Metering	Minnesota, New York, Oregon, Washington
Adaptive Traffic Signal Control	Arizona, Arkansas, California, Delaware, Florida, Georgia, Michigan, Minnesota, North Carolina, Oregon, Texas, Utah, Virginia, Washington
Dynamic Junction Control	California, Washington
Dynamic Lane Reversal / Contraflow Lane Reversal	Arterial: California, Kentucky, Louisiana, Maryland, New Jersey, North Carolina, Washington, D.C.
Dynamic Lane Use Control	Delaware, Washington
Dynamic Merge Control	California
Dynamic Shoulder Lanes	Minnesota
Dynamic Speed Limits	Alabama, Arizona, Colorado, Delaware, Florida, Maine, Michigan, Missouri, Nevada, New Hampshire, New Jersey, New Mexico, Oregon, Pennsylvania, Tennessee, Texas, Utah, Virginia, Washington, Wyoming
Queue Warning	Oregon
Transit Signal Priority	Arizona, California, Colorado, Delaware, Florida, Georgia, Illinois, Indiana, Kansas, Maryland, Minnesota, Missouri, Nevada, New Jersey, New York, North Carolina, Oregon, Pennsylvania, South Carolina, Texas, Utah, Virginia, Washington, Washington, D.C, West Virginia, Wisconsin

Overall, the more predominant ATM strategies deployed to date in the United States are adaptive ramp metering, adaptive traffic signal control, dynamic speed limits, and dynamic lane use control. Experience has been positive overall, and these strategies demonstrate that reduction in congestion and improvement in travel time reliability can be achieved. Additionally, some of these strategies are deployed in a work zone application to improve operations impacted by construction.

Adaptive signal control has shown a reduction in stops at traffic signals (10-41%) and a reduction in delay (5-42%) across the country depending on the location and application[64]. Additionally, system operators have found that using adaptive traffic signal control delays the onset of oversaturation and reduce the duration of delay times[65].

---

[62] "Deployment Statistics, Intelligent Transportation Systems," Research and Innovative Technology Adminstration, Intelligent Transportation Systems Joint Program, Office, accessed June 15, 2014, http://1.usa.gov/VH8MF7

[63] CH2MHill, *Tech Memo – State of the Practice for ATM Feasibility and Screening Guidance*, Federal Highway Administration, Washington, D.C., 2014.

[64] "Applications Overview, Intelligent Transportation Systems," Research and Innovative Technology Administration, Intelligent Transportation Systems Joint Program Office, accessed June 9, 2014, http://www.itsoverview.its.dot.gov.

[65] Stevanovic, A., *NCHRP Synthesis 403 – Adaptive Traffic Control Systems: Domestic and Foreign State Practice,* Transportation Research Board of the National Academies, Washington, D.C., 2010.

Transit signal priority has shown benefits in various locations around the country. Examples include a reduction of signal delay (40%) in Tacoma, WA by deploying transit signal priority and signal optimization; an improvement in travel time (10%) and travel time reliability (19%) in Portland, OR; a reduction in bus travel times (25%) in Los Angeles, CA; and a reduction in average running time for transit vehicles (15%) in Chicago.

7.6.2 International Applications and Relationship to U.S. Deployments

A 2006 International Scan Report first highlighted the potential for ATM to work to address congestion challenges in the U.S.[66] This review of European best practices identified commonalities between Europe and the U.S. in terms of challenges and issues facing the countries. These challenges included an increase in travel demand, a growth in congestion, a commitment to safety, and a shift in agency culture toward active management and system operation that focus on the customer, the willingness to use innovative strategies to address congestion, and the reality of limited resources to address all of these challenges[67].

Additionally, the scan team made the following observations related to the European approach to congestion management programs, policies, and experiences that resonate with transportation professionals in the U.S. and can guide future activities in this arena:

- Active management is essential to the European approach to congestion management, building on advancements in technology and traffic management experience to make the best use of existing capacity, and providing additional capacity during periods of congestion or incidents.
- The European mobility policy has the road user/customer as a focal point, and congestion management strategies center on the need to ensure travel time reliability for all trips, regardless of the time of day.
- Transportation and traffic management operations are priorities in the planning, programming, and funding processes and are seen as critical needs to realize the benefits of investment in the transportation infrastructure and deployed systems for congestion management.
- European agencies use tools to support cost-effective investment decisions at the project level to ensure that implemented strategies have the best benefit-cost ratio and represent the best investment of limited resources.
- Innovative financing strategies, such as public-private partnerships are emerging overseas to solve the ever-growing funding shortfall.
- European agencies recognize that providing consistent messages to roadway users to reduce the impact of those travelers on congestion is essential.
- European agencies are considering tolling and pricing as potential long-term solutions to transportation finance shortfalls and congestion management[68].

[66] Mirshahi, M., J. Obenberger, C. Fuhs, C. Howard, R. Krammes, B. Kuhn, R. Mayhew, M. Moore, K. Sahebjam, C. Stone, J. Yung, *Active Traffic Management: The Next Step in Congestion Management*. Report FHWA-PL-07-012, American Trade Initiatives for Federal Highway Administration, Alexandria, VA, 2007.
[67] Mott MacDonald, *ATM Monitoring and Evaluation: 4-Lane Variable Mandatory Speed Limits - 12 Month Report (Primary and Secondary Indicators)*, Highways Agency, Bristol, UK, 2008.
[68] Mott MacDonald, *ATM Monitoring and Evaluation: 4-Lane Variable Mandatory Speed Limits - 12 Month Report (Primary and Secondary Indicators)*, Highways Agency, Bristol, UK, 2008.

Overall, the international experience with ATM has provided direction for the development of ATM within the U.S.[69] Domestic agencies have seen similarities and commonalities in challenges and approaches that can be adapted to fit the needs of the American traveler. Table 5 highlights key influences of the European ATM approach and how the U.S. is adapting ATM to meet its needs and address its challenges.

Table 5. Influence of European ATM on U.S. Deployments[70]

Influences from Europe	Adaptation to the U.S. Environment
Active management as a tactical philosophy.	U.S. agencies see the value of being more proactive and dynamic in overall operations.
Use of ATM strategies to manage motorways.	Several ATM strategies are of interest and have been tried in isolation or as part of pilots in the U.S.
Moving toward a performance- or risk-based approach to design for ATM.	U.S. agencies can adapt ATM strategies to address their challenges being faced in design, operations, maintenance, and enforcement.

A 12-month evaluation of the ATM application of 4-lane variable mandatory speed limits on the M42 showed an improvement in capacity even as facility traffic growth kept pace with national traffic growth.[71] In the first 12 months of operation, the application delivered the following: consistent, measurable benefits that are supported by user perception; reduced average trip times during recurrent congestion; reduction in trip variability; reduced occurrence of severe congestion; high compliance with speed limits; smoother traffic operation and a potential reduction in driver's workload; minor reduction in noise; reduction in vehicle emissions; and speeds consistent across all lanes. A 3-year safety study of the same project indicated that the number of personal injury accidents (PIA) has decreased, and the number of people being fatally or seriously injured has seen a notable reduction.[72] It is important to note that one of the most important aspects of the European successes with speed-related strategies is the use of automated speed enforcement, which clearly impacts compliance and the overall improvement of operations.

7.6.3 Lessons Learned

The lessons learned by transportation agencies across the globe related to ATM applications are varied and cover a multitude of issues related to the operational approach. Agencies have identified numerous attributes that can help spell success for a project.[73] For example, ATM requires that agencies focus on improving the driver or customer's experience in traffic. As a part of that focus, educating customers and policy makers about the benefits of ATM is needed to enlist support for these types of strategies being funded either as part of construction projects or as tailored ATM projects. Providing real-time, accurate communications gives them actionable information that improves their ability to make better decisions about their travel routes and times of travel.

Furthermore, technological capability is core to ATM but not necessarily the end-all for managing the transportation system. Policies and regulations can present challenges to the deployment of ATM approaches, which push the boundaries of operations, partnerships, and opportunities. Ensuring that laws are flexible enough to accommodate them and the myriad ways these strategies are planned, developed, financed, and implemented helps move the state of the practice forward.

---

[69] Federal Highway Administration (FHWA), *ATDM Program Brief: The International Influence on ATDM in the United States*, Report FHWA-HOP-12-048, FHWA, Washington, D.C., 2012.
[70] Jones, J., M. Knopp, K. Fitzpatrick, M. Doctor, C. Howard, G. Laragan, J. Rosenow, B. Struve, B. Thrasher, and E. Young, *Freeway Geometric Design for Active Traffic Management in Europe*, Report FHWA-PL0101-004, American Trade Initiatives for Federal Highway Administration, Alexandria, VA, 2011.
[71] Mott MacDonald, *ATM Monitoring and Evaluation: 4-Lane Variable Mandatory Speed Limits - 12 Month Report (Primary and Secondary Indicators)*, Highways Agency, Bristol, UK, 2008.
[72] Mott MacDonald, *M42 Monitoring and Evaluation: Three Year Safety Review*, Highways Agency, Bristol, UK, 2011.
[73] Kuhn, B., D. Gopalakrishna, E. Schreffler, *The Active Transportation and Demand Management (ATDM) Program: Lessons Learned*, Report FHWA-HOP-13-018, Texas A&M Transportation Institute for Federal Highway Administration, College Station, TX, 2013.

Finally, effective communications at every stage of project planning, development, and implementation is essential to implementing ATM on a broad basis. Consistent messages from all levels of the organization to decision-makers, partners, and the public help sell the concept, especially when they resonate with the greater population and target issues that are of global concern, such as health and safety.

7.7 WRONG-WAY DRIVER TECHNOLOGY

Vehicles that utilize exit ramps by entering in the wrong direction present one of the most serious traffic hazards on the national highway system. On average, approximately 350 people are killed annually in the United States as a result of wrong-way crashes. This typically occurs when the errant driver is impaired or confused.

Arizona is no stranger to the devastation caused by wrong-way drivers. In Arizona, an average of 30 wrong-way crashes occur yearly with approximately 11 of those crashes resulting in fatalities. According to Arizona Department of Public Safety (DPS), there are approximately 25 wrong-way calls a month throughout the state. Of those calls, 90 percent of the errant drivers correct themselves avoiding collisions. Over the last six months in Arizona, six wrong-way crashes have left eight people dead and nine severely injured. Three of these fatal crashes occurred within a one-week span in May 2014.

In March 2013, the ADOT Research Center published the *Wrong-way Vehicle Detection: Proof of Concept Final Report 697.*[74] This report details ADOT's initial research effort to determine the viability of existing detector systems to identify entry of wrong-way vehicles onto the highway system. Five different detection technologies were evaluated: microwave sensors, Doppler radar, video imaging, thermal sensors, and magnetic sensors.

In June 2014, ADOT installed lower, larger "DO NOT ENTER" signs and "WRONG WAY" signs at six interchange sites along with new reflective pavement arrows to help alert confused or impaired wrong-way drivers. Their effectiveness will be studied as part of ADOT's efforts to reduce wrong-way collisions. Other states and counties are currently using flashing and/or audible signs in an attempt to correct confused, errant drivers.

ADOT's proposed on-going research effort explores options to enhance the existing freeway management system by incorporating a statewide wrong-way detection system to reduce wrong-way crashes on Arizona's state highways. Currently, the research phasing suggests detecting, notifying, then tracking an errant vehicle. The second phase of wrong-way detection research would entail developing the technology required to locate and track a wrong-way driver once they enter the highway system.

7.8 TECHNOLOGY'S IMPACT ON DISTRACTED DRIVERS

Humans are fallible. This recognition requires reflection on the central role humans have in the transportation system. There should be no surprise that 'human factors' are commonly identified as the probable cause in more than 90 percent of traffic accidents.[75] In recent years, diversions of cognitive resources from the task of driving (driver distraction) have been found to be among the leading causes of accidents, joining the more traditional ill-suited driving behaviors of alcohol use and speeding.[76] Concurrent with the increased availability of personal consumer electronic devices, the so called 'distracted driver' has quickly gained the

[74] http://ntl.bts.gov/lib/47000/47400/47414/AZ697.pdf accessed July 24, 2014
[75] J.R. Treat, N.S. Tumbas , S.T. McDonald , D. Shinar, R.D . Hume, R.E. Mayer, R.L. Stansifer, and N.J. Castellan. (1979) Tri-Level Study of the Causes of Traffic Accidents: Final Report. DOT HS 805 099
[76] National Safety Council White Paper. (2010). Understanding the distracted brain: Why driving while using hands-free cell phones is risky behavior. (on-line publication).

attention of traffic safety professionals, researchers, and the media. Although new age distractions such as texting, cell phone use, in-car navigation systems, and voice activated technologies get most of the attention, traditional distractions, such as reading, looking at an external object, eating, grooming, adjusting controls, and smoking still rank high on the list of offending activities and have even been found to have a higher odds ratio of a crash than new age distractions.[77,78] The is no doubt that cell phone use can present a significant distraction to drivers, even showing effects greater than eating or driving at a BAC of 0.08.[79] The generalized behavior of distracted drivers can be seen as a desire to get more done in less time, i.e., multitasking. While most believe they can successfully multitask, research continues to show that for most, this is a misconception.[80,81] While the forgoing discussion has focused on drivers, the same applies to pedestrians and bicycle riders. Members of these so called "vulnerable groups" of road users are frequently seen partaking in distracting activities while maneuvering in the road environment.

The susceptibility of humans in the transportation system to be distracted while driving is unlikely to diminish – in both the increasing types of devices that drivers bring into vehicles (e.g., smart phones), as well as the features being included with vehicles (e.g., cars with infotainment systems) and those built into the environment (e.g., digital billboards). However, while newer vehicles will be equipped with more features that allow for distraction, they also have an increasing number of safety features that are intended to combat the effects of distraction (i.e., adaptive cruise control, eye and head tracking, vehicle-to-vehicle communication, etc…). Unfortunately, these features can only do so much, will take time to integrate into the fleet, and do nothing for the distracted vulnerable road user. Thus, although technology offers some promise of assistance to the problem of distracted driving, much akin to efforts to address alcohol use while driving, more traditional efforts are touted as the best immediate solution to the emerging problem, including education for newly licensed drivers, safety awareness campaigns, legislation and enforcement.[82,83]

---

[77] D. L. Strayer, J. M. Cooper, J. Turrill, J. Coleman, N. Medeiros-Ward, and F. Biond. (2013) Measuring Cognitive Distraction in the Automobile. AAA Foundation for Traffic Safety. https://www.aaafoundation.org/sites/default/files/MeasuringCognitiveDistractions.pdf

[78] Distraction.gov Official US Government Website for Distracted Driving. http://www.distraction.gov/content/get-the-facts/facts-and-statistics.html (last visited 09/03/14).

[79] D.L. Strayer, F.A. Drews, and D.J. Crouch (2006) A Comparison of the Cell Phone Driver and the Drunk Driver. HUMAN FACTORS, Vol. 48, No. 2, Summer 2006, pp. 381–391.

[80] National Safety Council White Paper. *The Great Multitasking Lie. Debunking the myths of cell phone distracted driving.* http://www.nsc.org/safety_road/Distracted_Driving/Pages/The-Great-Multitasking-Lie.aspx (last visited

[81] D. M. Sanbonmatsu, D. L. Strayer, N. Medeiros-Ward, J. M. Watson (2013) Who Multi-Tasks and Why? Multi-Tasking Ability, Perceived Multi-Tasking Ability, Impulsivity, and Sensation Seeking. Plos ONE 8(1): e54402. doi:10.1371/journal.pone.0054402

[82] National Safety Council. Distracted Driving Awareness Month. http://www.nsc.org/safety_road/Distracted_Driving/Pages/DDAM.aspx (last visited 09/03/14)

[83] Distraction.gov Official US Government Website for Distracted Driving. http://www.distraction.gov/content/take-action/index.html (last visited 09/03/14).