MARICOPA ASSOCIATION of GOVERNMENTS

302 North 1st Avenue, Suite 300 ▲ Phoenix, Arizona 85003
Phone (602) 254-6300 ▲ FAX (602) 254-6490
Email: mag@mag.maricopa.gov ▲ Website: www.mag.maricopa.gov

March 9, 2010

TO: Members of the MAG Building Codes Committee

FROM: Steven Hether, Mesa, Chair

SUBJECT: MEETING NOTIFICATION AND TRANSMITTAL OF TENTATIVE AGENDA

Wednesday **March 17, 2010** - 2:00 pm
MAG Office, Suite 200, Cholla Room
302 North 1st Avenue, Phoenix

A meeting of the MAG Building Codes Committee (BCC) has been scheduled for the time and place noted above. Members of the MAG Building Codes Committee may attend in person, by videoconference or by telephone conference call. Those attending by videoconference or telephone conference call must make arrangements with Steve Gross at MAG and, for videoconferencing, your site coordinator by at least the Monday prior to the meeting.

If you drive to the meeting, please park in the garage under the building and bring your ticket to the meeting; parking will be validated. For those using transit, the Regional Public Transportation Authority will provide transit tickets for your trip. For those using bicycles, please lock your bicycle in the bike rack in the garage.

Pursuant to Title II of the Americans with Disabilities Act (ADA), MAG does not discriminate on the basis of disability in admissions to or participation in its public meetings. Persons with a disability may request a reasonable accommodation, such as a sign language interpreter, by contacting Heidi Bickart at the MAG office. Requests should be made as early as possible to allow time to arrange for accommodation.

Please be advised that under procedures approved by the MAG Regional Council on June 26, 1996, all MAG committees must have a quorum to conduct business. A quorum is a simple majority of the membership, or 13 people for the MAG Building Codes Committee. If you are unable to attend the meeting, please send a proxy from your jurisdiction or agency to represent you.

If you have any questions or require additional information, please contact Heidi Bickart at (602) 254-6300 or hbickart@mag.maricopa.gov.

TENTATIVE AGENDA

1. Call to Order	
2. Introductions	2. For information.
3. January 20, 2010 Meeting Minutes	3. Review and approve the minutes of the January 20, 2010 meeting.
4. Call to the Audience Members of the public may request to speak on items that fall under the jurisdiction of the MAG Building Codes Committee (BCC) and are not scheduled on the agenda; or, on items on the agenda for discussion but not for action. A total of 15 minutes will be provided for the Call to the Audience, with a limit of three minutes per speaker, unless the Chair requests an exception to this limit. Those requesting to comment on action agenda items may be provided an opportunity to do so at the time the agenda item is heard.	4. For information and discussion.
5. Comments From the Committee An opportunity will be provided for Building Codes Committee members to present a brief summary of current events. The Building Codes Committee is not allowed to propose, discuss, deliberate or take action at the meeting on any matter in the summary, unless the specific matter is properly noticed in accordance with the Arizona Open Meeting Law.	5. For information and discussion.
6. Electric Vehicle Charging Infrastructure Deployment Guidelines On August 5, 2009, Electric Transportation Engineering Corporation (eTec), a subsidiary of ECOtality, Inc., a leader in clean electric transportation and storage technologies, was selected by the U.S. Department of Energy for a grant of approximately $99.8 million to implement the largest deployment of electric vehicles and charging infrastructure in history. The eTec initiative proposes to deploy charging infrastructure in major population areas, including Phoenix/Tucson. Steve Schey and Marc Sobelman of eTec will	6. Recommend approval of the Electric Vehicle (EV) Charging Infrastructure Deployment Guidelines document as the foundation upon which the EV Micro-Climate© program is implemented to provide the optimum infrastructure to support and encourage the adoption of electric vehicles in the MAG region.

present eTec's Electric Vehicle Infrastructure Deployment Guidelines. The Deployment Guidelines document is intended to create a common knowledge base of EV requirements for stakeholders involved in the implementation of EV charging infrastructure. eTec's Deployment Guidelines provide the necessary background information for understanding EV requirements and the related codes, laws and standards for this effort. The document will provide the foundation upon which the EV Micro-Climate© program is implemented to provide the optimum infrastructure to support and encourage the adoption of electric vehicles in the MAG region.

7. Arizona Building Officials (AZBO) Amendments

Ken Sowers will discuss the status of the 2009 AZBO Amendments and present an estimated timeframe for when the MAG Building Codes Committee can expect to review these amendments.

7. For information and discussion.

8. MAG Building Inspectors/Plans Examiners (BI/PE) New Chair

Dustin Schroff, Senior Plans Examiner, City of Scottsdale and new Chair of the BI/PE Forum, will be introduced.

8. For information and discussion.

9. Updated MAG Building Codes Committee Membership

We are requesting that Committee members review Attachment One, Committee Roster, sent with this agenda. Please forward any changes to Heidi Bickart prior to the meeting or provide them at the meeting.

9. For information and discussion.

10. Update Survey of Code Adoption

Attachment Two identifies the codes that member agencies have adopted. Please review this information and provide any updates or corrections to Heidi Pahl Bickart.

10. For information and discussion.

11. Topics for Future Agendas

Potential topics for the next meeting will be discussed. The next meeting of the MAG

11. For information and discussion.

Building Codes Committee is scheduled for Wednesday April 21, 2010 at 2:00 p.m. in the Cholla Room of the MAG offices.

12. Adjournment

MARICOPA ASSOCIATION of GOVERNMENTS

302 North 1st Avenue, Suite 300 ▲ Phoenix, Arizona 85003
Phone (602) 254-6300 ▲ FAX (602) 254-6490
Email: mag@mag.maricopa.gov ▲ Website: www.mag.maricopa.gov

March 9, 2010

TO: Members of the MAG Building Codes Committee

FROM: Steve Hether, Mesa, Chair

SUBJECT: ADDENDUM TO THE MARCH 17, 2010, BUILDING CODES COMMITTEE AGENDA

An addendum is being added to the March 17, 2010, Building Codes Committee agenda to add the item Legislative Update. Please contact the MAG office if you have questions about the addendum to the agenda.

TENTATIVE AGENDA

13. Legislative Update An update will be provided on legislative issues of interest.	13. For information and discussion.

MINUTES OF THE
MARICOPA ASSOCIATION OF GOVERNMENTS
BUILDING CODES COMMITTEE

January 20, 2010

Maricopa Association of Governments Office
Cholla Room
Phoenix, Arizona

COMMITTEE MEMBERS

Steven Hether, Mesa, Chair
Ken Sowers, Avondale
Phil Marcotte, Buckeye
*Mike Tibbett, Carefree
A-Mike Baxley, Cave Creek
A- Alex Banachowski, Chandler
Mary Dickson, El Mirage
*Peter Johnson, Fountain Hills
*John Smith, Gila Bend
*Jo Rene DeVeau, Gila River Indian Community
A-Ray Patten, Gilbert
Tom Paradise for Bryan Woodcox, Glendale
*Ed Kulik, Goodyear
*Chuck Ransom, Litchfield Park
Tom Ewers, Maricopa County
Russ Louman for Bob Lee, Paradise Valley
*Dennis Marks, Peoria
David McCarthy for Tom Wandrie, Phoenix
A-Dean Wise, Queen Creek
*Michael Clack, Scottsdale
A-Michael Williams, Tempe
*Mario Rochin, Tolleson
John Stigsell, Youngtown
Rick DeStefano, Wickenburg
*Rus Brock, Home Builders Association

OTHERS IN ATTENDANCE

Heidi Pahl Bickart, MAG
Craig Schurke, Westmark Enterprises
John Goss, Southwest Gas
Rob Lore, Gammage and Bumbee

*Those members neither present nor represented by proxy.
A-Those members participating via audioconference
V-Those members participating via videoconference

1. Call to Order

Steven Hether, Chair, called to order the January 20, 2010 meeting of the MAG Building Codes Committee (BCC) at 2:00 p.m.

2. Introductions

Voting members Dean Wise, Michael Williams, Mike Baxley, Ray Patten, and Alex Banachowski attended via telephone conference call. All members introduced themselves.

3. November 18, 2009 Meeting Minutes

It was moved by Ken Sowers, seconded by Rick DeStefano and unanimously recommended to approve the November 18, 2009 meeting minutes.

4. Call to the Audience

No comments were made from the audience.

5. Comments From the Committee

Ken Sowers announced that the Arizona Building Officials (AZBO) spring education institute schedule is available online at the AZBO web site and the fee is 100 dollars to attend. Rick DeStefano asked how jurisdictions are handling or anticipate handling budget cuts of state fire marshall. Steve Hether said he believes the state is cutting 9 of 17 fire marshalls. Ken Sowers said the Avondale Fire Chief said these budget cuts would not impact the city of Avondale. Tom Ewers said the State assured the County that there would be no impact to them but there may be some new private/public agreements to help spread the workload. He noted that there are no agreements in place at this time. Steve Hether said he spoke with the State and shared some of Mesa's tips for reducing workload. Tom Ewers said that Bill Mailey at the State has done some interpretations of the statutory requirements of the state fire marhsalls office and is limited their responsibilities based on those interpretations. Mr. Ewers remarked that they do not do anything residential anymore, they will only handle special requests and public schools. Russ Louman said he was informed that the state fire marshalls will not do private schools.

Steve Hether distributed travel and support information for a seminar being held in Washington DC by the National Association of State Energy Officials. He encouraged interested MAG BCC members to apply for support.

Tom Ewers asked how other jurisdictions are enforcing the energy codes. Ken Sowers said he requires a report. David McCarthy said city of Phoenix accepts either rescheck or comcheck but said comcheck is lacking in some areas. Russ Louman said Paradise Valley accepts comcheck or rescheck. Steve Hether said that Mesa will also accept both when they adopt their energy code. David McCarthy said Phoenix splits up the duty between the architectural, mechanical and electrical reviewers because they did not have staff to concentrate solely on the energy code.

6. Westmark Enterprises Wardflex Piping.

Craig Schurke discussed standard piping and their Wardflex piping product. Mr. Schurke distributed several pieces of their product to demonstrate how it works. He explained that this product has been available since 1970 in Japan. He said they are all manufactured to the same standard. Mr. Schurke distributed literature and business cards.

Tom Paradise asked if it is platinum rated. Mr. Schurke replied that it is EA4 compliant. Tom Paradise asked if it meets the 2550 flame and smoke.spead. Craig said no, it is just EA4 compliant. He said pipe cannot be buried. He noted that if it goes underground it has to be in a plastic conduit and if it is outside the end of the pipe has to be sealed. He said there is no reason for a connection in the pipe because it is flexible. Craig Schurke said it is allowed to have a connection but it is not necessary. Tom Paradise asked if it is for outside direct burial. Craig replied yes it can go under a concrete slab.

Craig Schurke noted that the fitting is completely reusable. He noted that the pipe is made in various sizes and like other gas pipes it must be bonded. He noted that it is approved to 25 pounds operating pressure. Steve Hether asked if any listed bonded clamp will work. Craig Schurke replied that any bonding clamp will work. They produce some appliance stub outs.

He said installers must use their protection devices. He noted the product has been tested. He also noted that there is no more than 40psi allowed.

Craig Schurke offered his services to member agencies to certify plan reviewers or inspectors. He explained that he has done this at the city of Avondale.

Tom Paradise asked if it is certified to be used with 5psi gas pressure. Craig Schurke replied yes, so when Southwest Gas gives them permission to use 5psi they are equipped to handle it. Craig Schurke noted that plumbers like this pipe it is easy to use.

7. SAFEbuilt Building Department Services

Steve Hether noted that Jim Fox is not in attendance to provide a presentation on Building Department service they provide.

8. MAG Building Inspectors/Plans Examiners (BI/PE) Forum Update

Steve Hether stated that Dustin Schroff is not in attendance due to a family emergency.

9. Updated MAG Building Codes Committee Membership

No updates were provided. Members were encouraged to send any changes to Heidi Pahl Bickart.

10. Update Survey of Code Adoption

Steve Hether said that several months ago member agencies were planning to adopt the 2009 family of I-Codes. Mr. Hether solicited feedback on the new schedule of code adoption for MAG member agencies.

Steve Hether said budget limitations are preventing Mesa from moving to new codes. Tom Ewers remarked that the Maricopa County schedule has changed. Mr. Ewers said they are

moving to adopt the new codes in July 2010 with a grace period to October 2010. Ray Patten said Gilbert is looking at House Bill (HB) 2080 and Gilbert's adoption of the new codes may end up coinciding with expiration of the HB 2080 in July 2011. Russ Louman said they are considering the same thing as others, but are also considering adopting the 2009 energy code. Steve Hether said Mesa wants to adopt the energy code in 2010 as it is listed as one of the items in their stimulus funding. David McCarthy said that city of Phoenix does not have a firm date for adoption of the 2009 energy code or the other codes due to budget cutbacks.

Ken Sowers asked if Phoenix could email their amendments to the NEC to him. David McCarthy said he believes they are available on the Phoenix web site. David McCarthy noted that Phoenix is using the 2008 NEC. Tom Ewers asked if amendments to the 2009 I-Codes have been discussed by MAG BCC. Ken Sowers said the AZBO amendments to the I-Codes should be ready for MAG BCC review next month.

11. Topics for Future Agendas

Ken Sowers suggested the AZBO amendments as an agenda item for the next MAG BCC meeting. Steve Hether asked committee members for comments on future agenda items not based on construction activity. Ken Sowers replied that any new products on the market that are also of interest to community building officials could be future topics of discussion for the full MAG BCC.

Steve Hether asked if MAG BCC is interested in learning about SAFEbuilt. Ken Sowers said if the MAG BCC allows one vendor to give a presentation then the Chair needs to notify all vendors to give them an opportunity to make a presentation. Ken Sowers said jurisdictions have a business process which includes a request for qualifications, evaluating submissions, and choosing the best vendor to meet the jurisdiction needs. In terms of plan review the County and Mesa are locked into plan review contracts at this time. Tom Ewers said it could not hurt to learn of new companies and the services they offer. He said most cities are locked into a contract with a company but can still learn about new processes available. Tom Ewers suggested that vendors that approach the MAG BCC could be invited to attend a meeting and provide their comments under the agenda item, comments from the audience. Steve Hether said he will send an email to committee members soliciting ideas for future agenda items.

12. Adjournment

The meeting adjourned at 2:31pm.

ATTACHMENT ONE

MAG BUILDING CODES COMMITTEE MEMBERSHIP AS OF 3/8/2010

Name	Representing	Telephone #	Fax #	E-mail Address
Steven Hether (Chair)	Mesa	480-644-2039	480-644-4900	steve.hether@mesaaz.gov
Dennis Dixon (T)	Apache Junction	480-671-5156	480-982-7010	dennisdixion@ajcity.net
Ken Sowers (Vice Chair)	Avondale	623-333-4025	623-333-0401	ksowers@avondale.org
Phil Marcotte	Buckeye	623-349-6200	623-349-6221	pmarcotte@buckeyeaz.gov
Mike Tibbett	Carefree	480-488-1471	480 488-3845	mike@carefree.org
Mike Baxley	Cave Creek	480-488-6637	480-488-2263	mbaxley@cavecreek.org
Alex Banachowski	Chandler	480-782-3109	480-782-3110	alex.banachowski@chandlerazgov
Mary Dickson	El Mirage	623-876-2932	623-876-4607	mdickson@cityofelmirage.org
Peter Johnson	Fountain Hills	480-816-5110	480-837-3145	pjohnson@fh.az.gov
JoRene DeVeau	Gila River IC	520-562-3585	520-562-1033	jorene.deveau@gric.nsn.us
Ray Patten	Gilbert	480-503-6820	480-497-4923	ray.patten@gilbertaz.gov
Bryan Woodcox	Glendale	623-930-3139	623-915-2695	bwoodcox@glendaleaz.com
Ed Kulik	Goodyear	623-932-3910	623-932-1177	ekulik@goodyearaz.gov
Chuck Ransom	Litchfield Park	623-935-4356	623-935-5427	building@litchfield-park.org
Tom Ewers	Maricopa County	602-506-7145	602-506-3282	tomewers@mail.maricopa.gov
Bob Lee	Paradise Valley	480-348-3631	480-951-3751	rlee@paradisevalleyaz.gov
Dennis Marks	Peoria	623-773-7232	623-773-7233	dennis.marks@peoriaaz.gov
Tom Wandrie	Phoenix	602-495-7346	602-495-5430	tom.wandrie@phoenix.gov
Dean Wise	Queen Creek	480-358-3009	480-358-3002	dean.wise@queencreek.org
Michael Clack	Scottsdale	480-312-7629	480-312-9029	mclack@scottsdaleaz.gov
VACANT	Surprise			
Michael Williams	Tempe	480 350-8670	480 350-8677	michael_williams@tempe.gov
Mario Rochin	Tolleson	623-936-7111	623-936-7117	mrochin@tollesonaz.org
Rick DeStefano	Wickenburg	928-684-5451 x513	602-506-1580	rdestefano@ci.wickenburg.az.us
John Stigsell	Youngtown	623-933-8286	623-933-5951	jstigsell@youngtownaz.org
Rus Brock	Home Builders Assn.	602-274-6545	480-556-5478	brockr@hbaca.org
Heidi Bickart	MAG	602-254-6300	602-452-5098	hbickart@mag.maricopa.gov

(T) Temporary
(P) Proxy

Survey of Code Adoption

Jurisdiction	Building	Mechanical	Plumbing	Electric	Residential	Fire	Energy	Existing Building Code	Fuel	Performance	Notes	URL	Anticipated Adopted Date by Council	Anticipated Effective Date for 2009 ICC Codes (Month and Year)
Avondale	2006 IBC	2006 IMC	2006 IPC	2005 NEC	2006 IRC	2003 IFC	2006 IECC		2006 IFGC		2006 Fuel Gas Code. Codes adopted 2/20/07, effective 7/1/07	Avondale	January/February 2010	July 2010
Buckeye	2006 IBC	2006 IMC	2006 IPC	2005 NEC	2006 IRC	2006 IFC	2006 IECC				2006 Fuel Gas Code. Codes adopted 2/20/07, effective 7/1/07	Buckeye		No plans to adopt 2009 codes.
Carefree	2003 IBC	2003 IMC	1994 UPC	2002 NEC	2003 IRC	2003 IFC					Codes became effective July 1, 2006	Carefree		Not going to adopt, staying with 2003.
Cave Creek	2003 IBC	2003 IMC	1994 UPC	2002 NEC	2003 IRC	2003 IFC	2003 IECC					Cave Creek	January/February 2010	July 2010
Chandler	2006 IBC	2006 IMC	2006 IPC	2005 NEC	2006 IRC	2006 IFC	2006 IECC		2006 IFGC		Effective September 28, 2008	Chandler	January/February 2011	Early 2011
El Mirage	2006 IBC	2006 IMC	2006 IPC	2005 NEC	2006 IRC	2006 IFC	2006 IECC	2006 IEBC	2006 IFGC		1997 ICC/ANSI Accessibility Code with Arizonans with Disabilities Act. New codes will go into effect Jan. 1, 2008 with city amendments.	El Mirage	January/February 2010	July 2010
Fountain Hills	2006 IBC	2006 IMC	2006 IPC	2005 NEC	2006 IRC	2006 IFC	2006 IECC				Codes adopted April 17, 2008 with town amendments available on Web site.	Fountain Hills		No plans to adopt 2009 codes.
Gila Bend	1997 UBC	1997 UMC	1997 UPC	1999 NEC	1997 UBC	1997 UFC								Just adopted 2006 IBC.
Gila River	2006 IBC	2006 IMC	2006 IPC	2005 NEC	2006 IRC	2003 IFC	None							
Gilbert	2006 IBC	2006 IMC	2006 IPC	2005 NEC	2006 IRC	2006 IFC	2006 IECC		2006 IFGC		ADAAG per state requirements	Gilbert	January/February 2011	July 2011
Glendale	2006 IBC	2006 IMC	2006 UPC	2005 NEC	2006 IRC	2003 IFC		2006 IEBC			With city amendments. Effective Sept. 1, 2007	Glendale	January/February 2010	July 2010
Goodyear	2006 IBC	2006 IMC	1994 UPC	2005 NEC	2006 IRC	2006 IFC	2006 Residential				Adopted 5-14-2007.	Goodyear		
Guadalupe	1997 UBC	1997 UMC	1994 UPC	1999 NEC	1997 UBC	1997 UFC								Need phone #
Litchfield Park	2006 IBC	2006 IMC	2006 IPC	2005 NEC	2006 IRC	2003 IFC (waiting on Avondale)	2006 IECC		2006 IFGC		Codes effective July 1, 2008	Litchfield Park		
Maricopa County	2006 IBC	2006 IMC	2006 IPC (effective Jan. 19, 2008)	2005 NEC	2006 IRC						WITH MAG/AZBO AMENDMENTS adopted September 5, 2007.	Maricopa County	July 2010 with a grace period to October 2010	2009 I codes (and 2008 NEC) effective date of 1-1-10, but with a grace period to 4-1-10.
Mesa	2006 IBC	2006 IMC	2006 IPC	2005 NEC	2006 IRC	2006 IFC		2006 IEBC	2006 IFGC		2006 IBC, IMC, IPC, IRC and 2005 NEC will be effective 2/4/07. Did not adopt the energy code.	Mesa		Considering adopting the 2009 IECC.
Paradise Valley	2006 IBC	2006 IMC	2006 IPC	2005 NEC	2006 IRC	2006 IFC	2006 IECC		2006 IFGC		Effective July 1, 2007	Paradise Valley	January/February 2011	July 2011. Considering adopting the 2009 IECC.
Peoria	2006 IBC	2006 IMC	2006 IPC	2005 NEC	2006 IRC	2006 IFC			2006 IFGC			Peoria	January/February 2010	July 2010
Phoenix	2006 IBC	2006 IMC	2006 UPC	2008 NEC	2006 IRC	2006 IFC w/ Amendments	2006 IECC	2006 IEBC	2006 IFGC	2006 ICCP for Buildings and Facilities	Effective July 2, 2008	Phoenix	No date	No date
Queen Creek	2006 IBC	2006 IMC	2006 UPC	2005 NEC	2006 IRC	2006 IFC	2006 IECC	2006 IEBC			Effective Aug. 7, 2008	Queen Creek		No plans to adopt 2009 codes.
Salt River	2003 IBC	2003 IMC	2003 UPC	2002 NEC	2003 IRC	2003 IFC	None							Need phone #
Scottsdale	2006 IBC	2006 IMC	2006 IPC	2005 NEC	2006 IRC	2006 IFC	2006 IECC				Effective Sep. 1, 2007, except IPC June 30, 2008	Scottsdale	January/February 2010	July 2010
Surprise	2006 IBC	2006 IMC	2006 IPC	2006 IEC w/ 2005 NEC	2006 IRC	2006 IFC	2006 IECC	2006 IEBC	2006 IFGC		Adopted June 28, 2007	Surprise	January 2010	July 2010
Tempe	2006 IBC	2006 IMC	2006 IPC	2008 NEC	2006 IRC	2006 IFC	2006 IECC	2006 IEBC	2006 IFGC		Effective 1/12/2009	Tempe		
Tolleson	2006 IBC	2006 IMC	2006 IPC	2005 NEC w/ 2006 IEC	2006 IRC	2006 IFC	2006 IECC				2006 Fuel Gas Code, 2006 IPMC, 2006 NEAC. Codes adopted 2/20/07, effective 7/1/07.	Tolleson 2006 IFC Amend.	January/February 2010	July 2010
Wickenburg	2006 IBC	2006 IMC	2006 IPC	2005 NEC	2006 IRC	2003 IFC	2006 IECC	2006 IEBC	2006 IFGC			Wickenburg		No plans to adopt 2009 codes.
Youngtown	2006 IBC	2006 IMC	2006 IPC	2005 NEC	2006 IRC	2006 IFC			2006 IFGC			Youngtown	May 2010	July 2010

Last updated February 2010
Source: MAG Building Codes Committee Members
This is intended to be used as a guide, for the selected codes, as to what other agencies have adopted or intend to adopt.

AZBO Code Review and Development Committee

AZBO Code Review & Development Committee Amendments recommended for the 2009 ICC Codes

2009 INTERNATIONAL BUILDING CODE

Revision to: Table 1607.1

Revise as follows:

OCCUPANCY OR USE	UNIFORM (psf)	CONCENTRATED (lbs.)
27. Residential		
One- and two-family dwellings		
Uninhabitable attics with limited storage [i,j,k]	~~20~~ 40	
Habitable attics and sleeping areas	~~30~~ 40	
(no other changes in item 27)		

Reason: Industry standards in Arizona indicate designers based their calculations on the 40 psf for all second floor areas.

Committee Reason: Although this does exceed the minimum requirements set forth by the code, the committee members representing the building industry indicated the homebuilders and designers preferred to continue with the 40 psf in bed room areas. The increased design would lessen deflection in floor systems, provide a uniform design for headers and lessen complaints from buyers.

Revision to: Sections 308.2, 308.3, 310.1, 310.2, (new) 424, 309.2.9, 1008.1.2

Replace with new text as follows:

308.2, Group I-1. This occupancy shall include buildings, structures, or parts thereof housing more than 10 persons, on a 24-hour basis, who because of age, mental disability or other reasons, live in a supervised residential environment that provides supervisory care services. The occupants are capable of responding to an emergency without physical assistance from staff. The group shall include, but not be limited to the following:

Alcohol and drug abuse centers
Assisted living centers
Congregate care facilities
Convalescent facilities
Group homes
Halfway houses
Residential board and care facilities
Social rehabilitation facilities

A facility such as the above with 10 or fewer persons shall be classified as a Group R-4 Condition 1, or shall comply with the International Residential Code in accordance with 101.2 where the building is in compliance with Section 424 of this code.

308.3, Group I-2. This occupancy shall include buildings and structures used for medical, surgical, psychiatric, nursing, custodial, personal, or directed care on a 24-hour basis of more than 5 persons who are not capable of self-preservation by responding to an emergency situation without physical assistance from staff. This group shall include, but not be limited to the following:

Child care facilities
Detoxification facilities
Hospitals
Mental hospitals
Nursing homes (both intermediate care and skilled nursing facilities)

This occupancy shall also include assisted living facilities providing personal or directed care on a 24-hour basis of more than 10 persons who are not capable of responding to an emergency situation without physical assistance from staff. Assisted living facilities providing personal or directed care on a 24-hour basis of 10 or fewer persons who are not capable of responding to an emergency situation without physical assistance from staff shall be classified as R-4 Condition 2.

310.1 Group R-4. Residential occupancies shall include buildings arranged for occupancy as residential care/assisted living homes including not more than 10 occupants, excluding staff.

Group R-4 occupancies shall meet the requirements for construction as defined for Group R-3, except as otherwise provided for in this code and Section 424 or shall comply with the *International Residential Code* provided the building is protected by an *automatic sprinkler system* in accordance with Section 424.

310.1.1 Condition 1. This occupancy condition shall include facilities licensed to provide supervisory care services, in which occupants are capable of self-preservation by responding to an emergency situation without physical assistance from staff. Condition 1 facilities housing more than 10 persons shall be classified as group I-1.

310.1.2 Condition 2. This occupancy condition shall include facilities licensed to provide personal or directed care services, in which occupants are incapable of self-preservation by responding to an emergency situation without physical assistance form staff. Condition 2 facilities housing more than 10 persons shall be classified as Group 1-2.

310.2 Definitions. Delete the definition for **PERSONAL CARE SERVICE** and replace with the following: Assistance with activities of daily living that can be performed by persons without professional skills or professional training and includes the coordination or provision of intermittent nursing services and the administration of medications and treatments.

Delete the definition of **RESIDENTIAL CARE/ASSISTED LIVING FACILITY** and replace with the following: A building or part thereof housing a maximum of 10 persons, excluding staff, on a 24-hour basis, who because of age, mental disability or other reasons, live in a supervised residential environment which provides supervisory, personal, or directed care services. This classification shall include, but not be limited to, the following: residential board and care facilities, group homes, congregate care facilities, assisted living homes.

Add the following definitions:

SUPERVISORY CARE SERVICE. General supervision, including daily awareness of resident functioning and continuing needs.

DIRECTED CARE SERVICE. Care of residents, including personal care services, who are incapable of recognizing danger, summoning assistance, expressing need, or making basic care decisions.

Add a new **Section 424 ASSISTED LIVING HOMES**, as follows:

424.1 Applicability. The provisions of this section shall apply to a building or part thereof housing not more than 10 persons, excluding staff, on a 24-hour basis, who because of age, mental disability or other reasons, live in a supervised residential environment, which provides licensed care services. Except as specifically required by this division, R-4 occupancies shall meet all the applicable provisions of Group R-3.

424.2 General. Building or portions of buildings classified as R-4 may be constructed of any materials allowed by this code, shall not exceed two stories in height nor be located above the second story in any building and shall not exceed two thousand square feet above the first story, except as provided in Section 506.

424.3 Special Provisions. R-4 occupancies having more than 2,000 square feet above the first story shall be of not less than one-hour fire-resistive construction throughout.

424.3.1 Mixed Uses. R-4 occupancies shall be separated from other occupancies as provided in Table 508.4.

424.4 Access and Means of Egress Facilities

424.4.1 Accessibility. R-4 occupancies shall be provided with at least one accessible route as provided in Section 1104.1.

424.4.2 Exits

424.4.2.1 Number of Exits. Every story, basement, or portion thereof shall have not less than two exits.

Exception: Basements and stories above the first floor containing no sleeping rooms used by residents may have only one means of egress as provided in Chapter 10.

424.4.2.2 Distance to Exits. The maximum travel distance shall comply with Section 1016, except that the maximum travel distance from the center point of any sleeping room to an exit shall not exceed 75 feet.

424.4.2.3 Emergency Exit Illumination. In event of a power failure, exit illumination shall be automatically provided from an emergency system powered by storage batteries or an onsite generator set installed in accordance with the International Electric Code.

424.4.2.4 Emergency Escape and Rescue. R-4 occupancies shall comply with the requirements of Section 1029, except that Exception #1 to 1029 does not apply to R-4 occupancies.

424.4.2.5 Delayed Egress Locks. In R-4 Condition 2 occupancies, delayed egress locks shall be permitted in accordance with 1008.1.4.4, Items 1, 2, 4, 5, and 6 or 1008.1.9.8.

424.5 Smoke Alarms and Sprinkler Systems.

424.5.1 Smoke Alarms. All habitable rooms and hallways in R-4 occupancies shall be provided with smoke alarms installed in accordance with Section 907.2.11.

424.5.2 Sprinkler Systems. R-4 occupancies shall be provided with a sprinkler system installed in accordance with 903.2.8. Sprinkler systems installed under this section shall be installed throughout, including attached garages, and in Condition 2 facilities, shall include concealed spaces of or containing combustible materials. Such systems may not contain unsupervised valves between the domestic water riser control valve and the sprinklers. In Condition 2 occupancies, such systems shall contain water flow switches electrically supervised by an approved supervising station, and shall sound an audible signal at a constantly attended location.

1008.1.2, Door Swing, delete the text of exception #4, and replace with the following;

4. Doors within or serving a single dwelling unit in Groups R-2 and R-3, as applicable in 101.2, and R-4.

Reason: The purpose of this amendment is to bring the provisions of the code into agreement with the licensing rules of the Arizona Department of Health Services. DHS license categories have a threshold of 10 residents to move from a residential home setting to an institutional setting. DHS rules (R9-10-701) state, "Assisted living home" or "home" means an assisted living facility that provides resident rooms to (10) or fewer residents, as distinct from an "assisted living center", which provides services to more than (10) persons. In addition, the license classifications to provide "personal care services" and "directed care services" to residents allow for residents to be bed-bound. The use of "Condition" distinctions is reflective of similar distinctions in I-occupancies.

Each state has unique agency programs for assisted living occupancies, which establish license categories based on numbers of residents and the familiar ambulatory/non-ambulatory distinction. Uniformity could be accomplished by either trusting health service agencies nationally to agree to uniform thresholds and other licensing characteristics, or by amending building codes to allow each state to adapt to that state's unique rules. If numerical thresholds are provided on a "fill in the blanks" basis, condition categories can be added or deleted, and definitions can be customized to match licensure definitions, the hazards associated with these facilities can be addressed comprehensively on a state-by-state basis.

The most hazardous scenario is a facility in an ordinary, un-rated residential structure, occupied by (10) bed-bound residents, supervised by a single caregiver. Provisions for exiting, smoke detectors, emergency illumination, sprinklers, et al, can substantially increase the chances of survival in a fire or other emergency for these residents.

Revision to: 716.5.4 2007 Supplement

Revise as follows: Add new exception:

4. Such walls are penetrated by ducted HVAC systems, have a required fire-resistance rating of 1 hour or less and are in buildings equipped throughout with an automatic sprinkler system in accordance with Section 903.3.1.1 or 903.3.1.2. For the purposes of this exception, a ducted HVAC system shall be a duct system for conveying supply, return or exhaust air as part of the structure's HVAC system. Such a duct system shall be constructed of sheet steel not less than 26 gage thickness and shall be continuous from the air-handling appliance or equipment to the air outlet and inlet terminals.

Reason: Currently the code is less restrictive for penetrations of a fire barrier than a fire partition. This proposal adds an additional exception for fire partitions. This proposal duplicates provisions of Section 716.5.2 Exception 3 as an exception 4 for fire partitions. It is logical to allow the exception for a wall type where the code places lesser restrictions on its use. This exception does not limit the size of a duct penetration as Exception 3 does currently. If this exception is acceptable for fire barriers, it should be acceptable for fire partitions.

Revision to: Section 1210.2

Revise as follows:

1210.2 Walls. Walls within 2 feet (610 mm) of service sinks, urinals and water closets shall have a smooth, hard, nonabsorbent surface, to a height of 4 feet (1219 mm) above the floor and except for structural elements, the materials used in such walls shall be of a type that is not adversely affected by moisture.

Reason: The areas around service sinks are as susceptible to moisture as the urinals and water closets as splattering of water and other liquids is common place. Also, with the use of cleaning chemicals and other items that can and will be used at the service sinks makes the walls as subject to the effects experienced at the urinals and water closets.

Revision to: 3109

Revise as follows:

Section 3109 is hereby REPEALED

Reason: The requirements of this section do not comply with Arizona state law governing swimming pool enclosure requirements.

2009 INTERNATIONAL RESIDENTIAL CODE

Revision to: TABLE R 301.5

Revise as follows:

USE	LIVE LOAD
Attics with limited storage [b,g]	~~20~~ 40
Habitable attics and attics served with fixed stairs	~~30~~ 40
Sleeping rooms	~~30~~ 40

(No other changes to Table)

Reason: Industry standards in Arizona indicate designers based their calculations on the 40 psf for all second floor areas.

Committee Reason: Although this does exceed the minimum requirements set forth by the code, the committee members representing the building industry indicated the homebuilders and designers preferred to continue with the 40 psf in bed room areas. The increased design would lessen deflection in floor systems, provide a uniform design for headers and lessen complaints from buyers.

Revision to: Section G2415.10

Proposal: G2415.10 (404.10) Minimum burial depth. Underground piping systems shall be installed a minimum depth of 12 inches (305 mm) below grade for metal piping and 18 inches (457mm) for plastic piping.

Delete: G2415.10.1

Reason: The distinction between metal piping and plastic piping in regards to burial depth is because the plastic piping is more susceptible to damage and needs the increased depth for protection.

The elimination of the section addressing individual outside appliances is because the risks are the same whether the line serves multiple appliances or a single appliance. With similar risks, similar depths should be required.

Revision to: Section P2803.6.1

Revise as follows:

P2803.6.1 Requirements for discharge piping. The discharge piping serving a pressure relief valve, temperature relief valve or combination thereof shall:

1. Not be directly connected to the drainage system.
2. Discharge through an air gap located in the same room as the water heater <u>except where the discharge is to the outdoors, not subject to freezing and the piping terminates not less than 6 inches (152mm) and not more than 12 inches (305mm) above grade.</u>
3. Not be smaller than the diameter of the outlet of the valve served and shall discharge full size to the air gap.
4. Serve a single relief device and shall not connect to piping serving any other relief device or equipment.
5. Discharge to the floor, to the pan serving the water heater or storage tank, to a waste receptor or to the outdoors.
6. Discharge in a manner that does not cause personal injury or structural damage.
7. Discharge to a termination point that is readily observable by the building occupants.
8. Not be trapped.
9. Be installed so as to flow by gravity.
10. Not terminate more than 6 inches (152 mm) above the floor or waste receptor.
11. Not have a threaded connection at the end of such piping

12. Not have valves or tee fittings.
13. Be constructed of those materials listed in Section 605.4 or materials tested, rated and approved for such use in accordance with ASME A112.4.1.
14. Direct the discharge in a downward direction.

Reason: This change will allow the P & T pressure relief drain pipe to extend direct from the water heater to an exterior location where no freeze potential exists. This is consistent with the IPC Section 504.6.5 (IRC P2803.6.1.5) which allows the discharge to go directly outdoors. The 6" minimum termination height provides the required air gap. This proposed change does set a termination height limit of 12". This method of drainage and termination is very common in locations that have previously utilized the Uniform Plumbing Code for over 50 years. No data exists to suggest this method has created unsafe conditions. The Committee reason for disapproval of Item P50-07/08 clarifies that the code allows a discharge pipe to terminate over a water heater drip pan. The code currently establishes drip pan drain terminations at 6" minimum and 24" maximum termination heights in IPC Section 504.7.2. If it's safe to drain a discharge pipe to a drip pan using these heights, then it certainly would be no more harmful to use the similar heights for an outdoors termination.

This proposal improves the termination requirements.

This method is also more energy efficient by not creating a direct open pipe for air flow from and to the out doors as will occur where an indirect waste receptor is utilized in the room with the water heater.

Revision to: M1503.1

Revise as follows:

Add new text as follows:

M1503.1 General. Range hoods shall discharge to the outdoors through a single wall duct. The duct serving the hood shall have a smooth interior surface, shall be airtight, and shall be equipped with a backdraft damper. Changes in size or direction shall be accomplished with a pre-manufactured transition fitting. Ducts serving range hoods shall not terminate in an attic or crawl space or areas inside the building. (No other changes)

2009 INTERNATIONAL PLUMBING CODE

Revision to: Section 101

Add a new section 101.5 to read as follows:

101.5 Appendices. Provisions in the appendices shall not apply unless specifically adopted.

Reason: This provision is included in all the other International codes and needs to be included in the International Plumbing Code to maintain uniformity among the codes.

Revision to: Section 504.6

Revise as follows:

504.6 Requirements for discharge piping. The discharge piping serving a pressure relief valve, temperature relief valve or combination thereof shall:

1. Not be directly connected to the drainage system.
2. Discharge through an air gap located in the same room as the water heater except where the discharge is to the outdoors, not subject to freezing and the piping terminates not less than 6 inches (152mm) and not more than 12 inches (305mm) above grade.
3. Not be smaller than the diameter of the outlet of the valve served and shall discharge full size to the air gap.

4. Serve a single relief device and shall not connect to piping serving any other relief device or equipment.
5. Discharge to the floor, to the pan serving the water heater or storage tank, to a waste receptor or to the outdoors.
6. Discharge in a manner that does not cause personal injury or structural damage.
7. Discharge to a termination point that is readily observable by the building occupants.
8. Not be trapped.
9. Be installed so as to flow by gravity.
10. Not terminate more than 6 inches (152 mm) above the floor or waste receptor.
11. Not have a threaded connection at the end of such piping
12. Not have valves or tee fittings.
13. Be constructed of those materials listed in Section 605.4 or materials tested, rated and approved for such use in accordance with ASME A112.4.1.
14. Direct the discharge in a downward direction.

Reason: This change will allow the P & T pressure relief drain pipe to extend direct from the water heater to an exterior location where no freeze potential exists. This is consistent with the IPC Section 504.6.5 (IRC P2803.6.1.5) which allows the discharge to go directly outdoors. The 6" minimum termination height provides the required air gap. This proposed change does set a termination height limit of 12". This method of drainage and termination is very common in locations that have previously utilized the Uniform Plumbing Code for over 50 years. No data exists to suggest this method has created unsafe conditions. The Committee reason for disapproval of Item P50-07/08 clarifies that the code allows a discharge pipe to terminate over a water heater drip pan. The code currently establishes drip pan drain terminations at 6" minimum and 24" maximum termination heights in IPC Section 504.7.2. If it's safe to drain a discharge pipe to a drip pan using these heights, then it certainly would be no more harmful to use the similar heights for an outdoors termination.

This proposal improves the termination requirements.

This method is also more energy efficient by not creating a direct open pipe for air flow from and to the out doors as will occur where an indirect waste receptor is utilized in the room with the water heater.

In many commercial tenant spaces it is common practice to locate a water heater above the lay-in ceiling in an attic or interstitial space. Many times these locations are above a restroom or storage room. IPC Section 802.3 would prohibit an indirect waste receptor in such locations. A drain pipe needs to extend beyond the room or space containing the water heater.

Also, IPC 802.3 prohibits indirect waste receptors in rest rooms and 504.6.2 requires an air gap in the same room as the water heater, thereby prohibiting water heaters in rest rooms. This change would allow a reasonable option where the need exists.

2009 INTERNATIONAL FUEL GAS CODE

Revision to: Section 404.9

404.9 Minimum burial depth. Underground piping systems shall be installed a minimum depth of 12 inches (305 mm) below grade for metal piping and 18 inches (457mm) for plastic piping.

Delete: Section 404.9.1

Reason: The distinction between metal piping and plastic piping in regards to burial depth is because the plastic piping is more susceptible to damage and needs the increased depth for protection.

The elimination of the section addressing individual outside appliances is because the risks are the same whether the line serves multiple appliances or a single appliance. With similar risks, similar depths should be required.

2009 INTERNATIONAL MECHANICAL CODE

No Changes

Electric Vehicle Charging Infrastructure Deployment Guidelines for The Greater Phoenix and Tucson Areas

February, 2010

Version 2.0

ELECTRIC TRANSPORTATION ENGINEERING CORPORATION

Disclaimers

This document was prepared for establishing the foundation for the initial deployment of EVSE by Electric Transportation Engineering Corporation. Electric Transportation Engineering Corporation, nor any of their affiliates:

> (a) represents, guarantees or warrants to any third party, either expressly or by implication: (i) the accuracy, completeness or usefulness of; (ii) the intellectual or other property rights of any person or party in; or (iii) the merchantability, safety or fitness for purpose of; any information, product or process disclosed, described or recommended in this document,
> (b) assumes any liability of any kind arising in any way out of the use by a third party of any information, product or process disclosed, described or recommended in this document, or any liability arising out of reliance by a third party upon any information, statements or recommendations contained in this document.

Should third parties use or rely on any information, product or process disclosed, described or recommended in this document, they do so entirely at their own risk.

© 2010 Electric Transportation Engineering Corporation
All rights reserved

ETEC Document #021212.0 Feb 2010

Contents

1. Introduction 1
2. Electric Vehicle Technology 2
   A. Electric Vehicle Configurations 2
   B. Electric Vehicle Categories 4
   C. Batteries 4
   D. Automaker Plans 6
3. Charging Requirements 7
   A. Charging Components 7
   B. Charging Levels 9
   C. Level 1 versus Level 2 Considerations 12
   D. General Requirements 12
4. Charging Scenarios 15
   A. Single Attached/Detached Garages 15
   B. Car Port 20
   C. Multi-Family Dwellings 21
   D. Commercial Fleets 23
   E. Publicly Available Charging Stations 25
5. Additional Charging Considerations 33
   A. Signage 33
   B. Lighting and Shelter 33
   C. Disability Requirements 34
   D. Safety Issues related to Indoor Charging 36
   E. Installations Located in Flood Zones 36
   F. Point of Sale Options 37
   G. Data Collection 40
   H. Vandalism 40
   I. Station Ownership 40
   J. Maintenance 41
6. Codes and Standards 42
   A. Regulatory Agencies 42
   B. National Electric Code 43
   C. SAE and UL 45
   D. Construction Codes for the Cities of Phoenix and Tucson 46
   E. Occupational Safety and Health 46
   F. Engineering, Permitting & Construction 47
7. Utility Integration 48
   A. Background 48
   B. Interconnection Requirements 51

C. Commercial Electrical Supply/Metering 51
8. Cost Estimating 52
A. Residential Cost Worksheet 52
B. Commercial Fleet Cost Worksheet (10 Stations).....53
C. Commercial Publicly Available Cost Worksheet.....54
D. Level 3 Charging Cost Worksheet.....55

Figures

Figure 2-1 Battery Electric Vehicle.....2
Figure 2-2 Series Plug-In Hybrid Vehicle Block Diagram 3
Figure 2-3 Parallel Plug-In Hybrid Vehicle Block Diagram.....3
Figure 2-4 Automaker PHEV and BEV Plans 6
Figure 3-1 Level 2 Charging Diagram.....7
Figure 3-2 J1772 Connector and Inlet (Preliminary).....8
Figure 3-3 Level 1 Charging Diagram.....9
Figure 3-4 Level 1 Cord Set.....10
Figure 3-5 Level 2 Charging.....11
Figure 3-6 Level 3 Charging (DC Charging) 11
Figure 3-7 Chrysler EPIC Level 3 Charging (90kW) circa 1997 12
Figure 3-8 Wheel Stop Figure 3-9 Garage Wheel Stop 13
Figure 4-1 Double Garage Location for EVSE.....16
Figure 4-2 Typical Single Garage Location for EVSE.....17
Figure 4-3 Typical Level 1 and Level 2 Installations for a Residential Garage...18
Figure 4-4 Installation Process for a Residential Garage/Car Port.....19
Figure 4-5 Installation Considerations for Outdoor Parking.....20
Figure 4-6 Typical EVSE Installation in Multi-Family Lot 21
Figure 4-7 Installation Process for Multi-Family.....22
Figure 4-8 Level 2 Commercial EV Charging Location.....24
Figure 4-9 Installation Process for Commercial Fleet Operations 25
Figure 4-10 Example Publicly Available Charging Layout 28
Figure 4-11 Publicly Available Charging Examples 28
Figure 4-12 Example Shopping Mall EVSE Parking 30
Figure 4-13 Indoor Charging Figure 4-14 Outdoor Charging 30
Figure 4-15 Installation Flowchart for Public Charging 31
Figure 4-16 Curbside Charging.....32
Figure 5-1 EV Parking Signs.....33
Figure 5-2 Public Charging with Shelter and Lighting.....34
Figure 5-3 Parking Accessibility Requirements 35
Figure 5-4 Typical Sign for Accessible Parking 36
Figure 5-5 Smartcard Reader 38
Figure 5-6 RFID Fob 39

Figure 7-1 Smart Grid Infrastructure 49
Figure 8-1 Conceptual Fast Charge Station (2 Charge Locations).....55

Tables

Table 2-1 EV Charge Times.....5
Table 5-1 Accessibility Requirements 35
Table 8-1 Cost Worksheet for Residential EVSE Level 2 Installation.....52
Table 8-2 Cost Worksheet for Commercial Fleet Level 2 Installation (10 Stations) 53
Table 8-3 Cost Worksheet for Level 2 Public Installation (Two Charging Spots) 54
Table 8-4 Cost Worksheet for Level 3 Installation (2 Stations).....55

Acronyms

BEV Battery Electric Vehicle - vehicles powered 100% by the battery energy storage system available on-board the vehicle.

CCID Charge Current Interrupting Device.

EV Electric Vehicle

EREV Extended Range Electric Vehicle – see PHEV.

EVSE Electric Vehicle Supply Equipment – equipment that provides for the transfer of energy between the electric utility power and the electric vehicle.

ICE Internal Combustion Engine.

kW Kilowatts. A measurement of electric power. Used to denote the power an electrical circuit can deliver to a battery.

kWh Kilowatt Hours. A measurement of total electrical energy used over time. Used to denote the capacity of an EV battery.

NEC National Electric Code -part of the National Fire Code series established by the National Fire Protection Association (NFPA) as NFPA 70. The NEC codifies the requirements for safe electrical installations into a single, standardized source.

NEMA National Electrical Manufacturers Association. Develops standards for electrical products.

PHEV Plug-in Hybrid Electric Vehicle – vehicles utilizing a battery and an internal combustion engine (ICE) powered by either gasoline or diesel.

REEV Range Extended Electric Vehicle – see PHEV.

RTP Real Time Pricing – a concept for future use whereby utility pricing is provided to assist a customer in selecting the lowest cost charge.

SAE Society of Automotive Engineers. Standards development organization for the engineering of powered vehicles.

TOU Time of Use - an incentive based electrical rate established by an electric utility.

V2G Vehicle to Grid - a concept that allows the energy storage in electric vehicles to be used to support the electrical grid during peak electrical loads.

VAC Voltage Alternating Current.

Electric Vehicle Charging Infrastructure Deployment Guidelines

1. Introduction

Concerns with global warming, oil shortages and increasing gas prices, along with the rapid rise of more fuel efficient vehicles are a clear indicator of changing consumer preferences and industry direction. As major automotive manufacturers plan to launch plug-in electric vehicles (EV) in 2010, the future of transportation is being propelled by a fundamental shift to cleaner and more efficient electric drive systems.

Electric Transportation Engineering Corporation (eTec), a subsidiary of ECOtality, has been involved in every North American EV initiative since 1989. With over two decades of experience in electric transportation, eTec is the most experienced and qualified solution provider for EVs and supporting infrastructure. eTec's unparalleled EV infrastructure experience, combined with its expertise in batteries, battery charging, utility activities and electric drive systems makes eTec a leader in electric transportation.

ECOtality and eTec developed EV Micro-Climate© as an integrated turn-key program to ensure an area is well equipped with the needed infrastructure to support the consumer adoption of electric transportation. Beginning with extensive feasibility and infrastructure planning studies, the program provides a blueprint to create a rich EV infrastructure. The program is developed with all relevant stakeholders including governmental organizations, utilities, private-sector businesses and automotive manufacturers.

This Guidelines document is not intended to be an installation manual or a replacement for approved codes and standards but is intended to create a common knowledge base of EV requirements for stakeholders involved in the development of EV charging infrastructure. Electric Vehicles have unique requirements that differ from internal combustion engine vehicles and many stakeholders are currently not familiar with these requirements. eTec's Electric Vehicle Infrastructure Deployment Guidelines provide the necessary background information for understanding EV requirements and the related codes, laws and standards and is the foundation upon which the EV Micro-Climate© program builds in order to provide the optimum infrastructure to support and encourage the adoption of electric vehicles wherever it is directed.

2. Electric Vehicle Technology

This section describes the basic electric vehicle technologies that are either available in the market place or coming to market in the near future. The focus of this section is on vehicles licensed for the road that incorporate a battery energy storage device with the ability to connect to the electrical grid for the supply of some or all of its fuel energy requirements. Two main vehicle configurations are described along with the four main categories of vehicle applications. Vehicle categories and the relative size of their battery packs are discussed in relationship recommended charging infrastructure.

A. Electric Vehicle Configurations

- Battery Electric Vehicle (BEV)

Battery Electric Vehicles (BEVs) are powered 100% by the battery energy storage system available on-board the vehicle. The Nissan LEAF is an example of a BEV. Refueling the BEV is accomplished by connection to the electrical grid through a connector system that is design specifically for this purpose. Most advanced BEVs have the ability to recapture some of the energy storage utilized through regenerative breaking (In simple terms, converting the propulsion motor into a generator when breaking). When regenerative breaking is applied, BEVs can typically recover 5 to 15 percent of the energy used to propel the vehicle to the vehicle speed prior to breaking. (Sometimes manufacturers install solar photovoltaic (PV) panels on vehicle roofs. This typically provides a very small amount of energy relative to the requirements of propelling the vehicle, but integrating PV in the roof can typically provide enough power to operate some small accessory loads.)

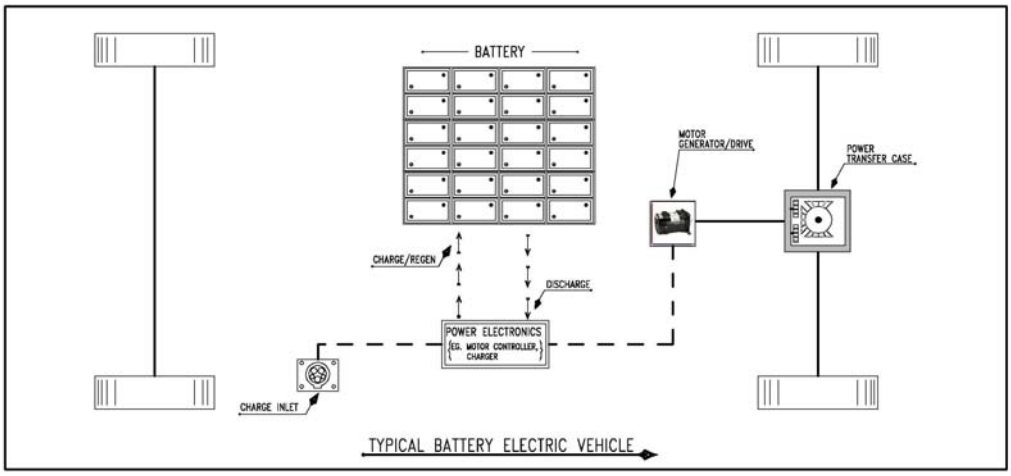

Figure 2-1 Battery Electric Vehicle

A typical BEV can be depicted by the block diagram shown in Figure 2-1. Since the BEV has no other significant energy source, the battery must be selected to meet the BEV range and power requirements. BEV batteries are typically an order of magnitude larger than the batteries in hybrid electric vehicles.

- Plug-in Hybrid Electric Vehicle (PHEV)

PHEVs are powered by two energy sources. The typical PHEV configuration utilizes a battery and an internal combustion engine (ICE) powered by either gasoline or diesel. Within the PHEV family, there are two main design configurations, a Series Hybrid as depicted in Figure 2-2 and a Parallel Hybrid as depicted in Figure 2-3. The Series Hybrid vehicle is propelled solely by the electric drive system, whereas the Parallel Hybrid vehicle is propelled by both the ICE and the electric drive system. As with a BEV, a Series Hybrid will typically require a larger and more powerful battery than a Parallel Hybrid vehicle in order to meet the performance requirements of the vehicle solely based on battery power.

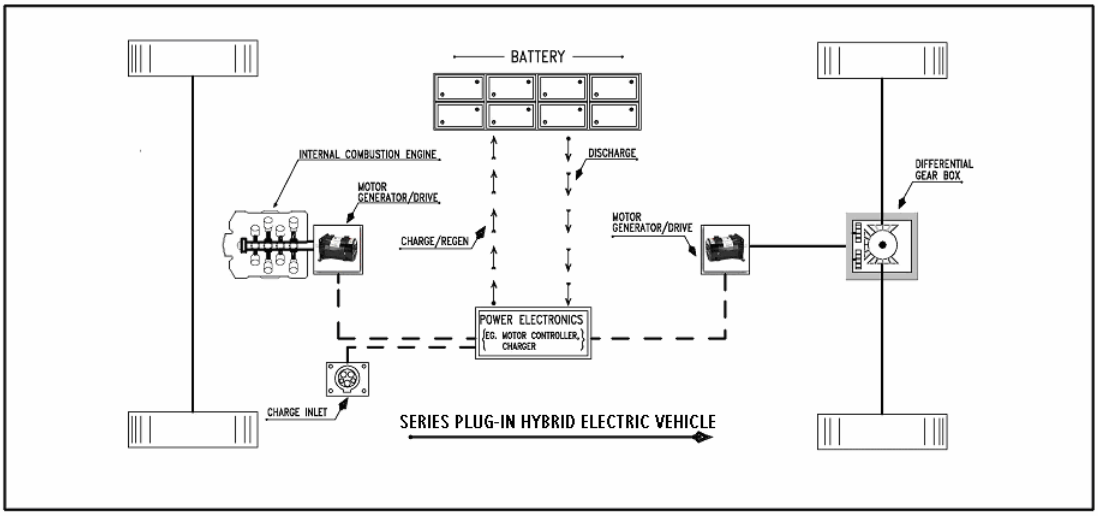

Figure 2-2 Series Plug-In Hybrid Vehicle Block Diagram

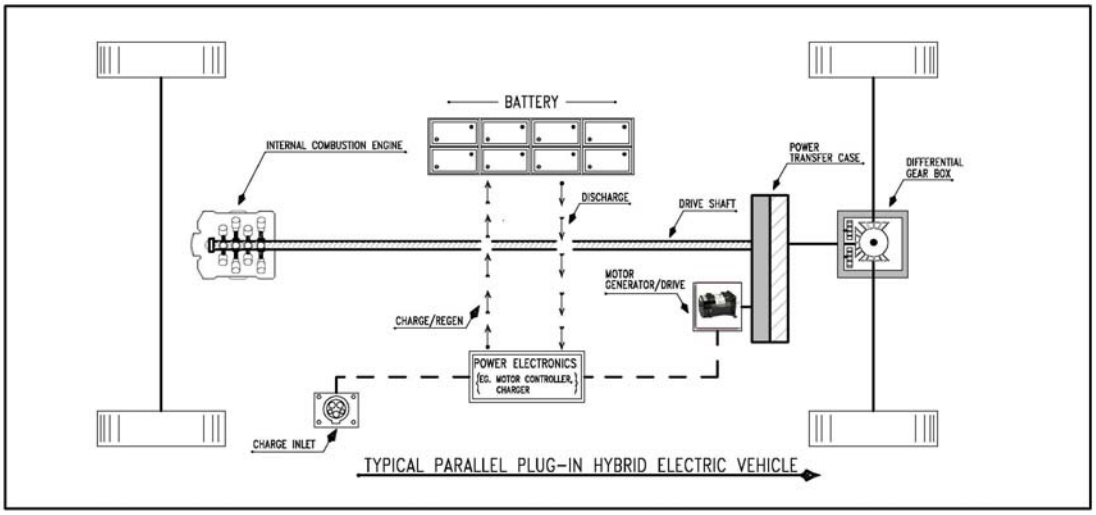

Figure 2-3 Parallel Plug-In Hybrid Vehicle Block Diagram

Manufacturers of PHEVs use different strategies in combining the battery and ICE and may utilize the battery only for the first several miles, such as the Chevy Volt, with the ICE providing generating power for the duration of the vehicle range. Others may use the battery power for sustaining motion and the ICE for acceleration or higher energy demands at highway speeds. Frequently, the vehicles employing the former strategy gain a designation such as PHEV-20 to indicate that the first 20 miles are battery only. Other terms related to PHEVs may include Range Extended Electric Vehicle (REEV) or Extended Range Electric Vehicle (EREV).

B. Electric Vehicle Categories

EVs can be broken down into the following categories:

- On-Road Highway Speed Vehicles

On-Road Highway Speed Vehicle is an EV capable of driving on all public roads and highways. Performance of these On-Road vehicles is similar to Internal Combustion Engine vehicles.

- City Electric Vehicles

Traditionally, City Vehicles have been BEVs that are capable of driving on most public roads, but generally are not driven on highways. Top speed is typically limited to 55 mph.

- Neighborhood Electric Vehicles (NEVs)

Neighborhood electric vehicles (NEVs) also known as Low Speed Vehicles (LSVs) are BEVs that are limited to 25 mph and are allowed in certain jurisdictions to operate on public streets posted at 35 mph or less.

- Commercial On-Road Highway Speed Vehicles

There are a number of commercial electric vehicles including commercial trucks and buses. These vehicles are found as both BEVs and PHEVs. Performance and capabilities of these vehicles are specific to their application.

The focus of the EV Micro-Climate© program is on the first and last bulleted items above. Specialty vehicles such as electric motorcycles and bicycles require a different planning process.

C. Batteries

- Battery Technology

Recent advancements in battery technologies will allow EVs to compete with ICE vehicles in performance, convenience and cost. Although lead-acid technology serves many EV applications like forklifts and airport ground support equipment very cost-effectively, the limitations on energy density and repeated cycles of charging and discharging make its application to on-road highway speed EVs less practical.

Today, most major car companies utilize Nickel-Metal-Hydride or various Lithium based technologies for their EVs. Lithium provides 4x the energy of lead-acid and 2x that of Nickel-Metal-Hydride. The materials for Lithium based batteries are generally considered abundant, non-hazardous and lower cost than Nickel based technologies. The current challenge with lithium-based technologies is increasing battery capacity while maintaining quality, cycle life and lowering production costs.

From an infrastructure standpoint, it is important to consider as battery costs are driven down over time, the auto companies will increase the size of the lithium-based battery packs and thus the range of electric vehicles.

- Relative Battery Capacity

Battery size or capacity is measured in kilowatt hours (kWh). Battery capacity for electric vehicles will range from as little as 3 kWh to as large as 40 kWh or more. Typically, PHEVs will have smaller battery packs because they have more than one fuel source. BEVs rely completely on the storage from their battery pack for both range and acceleration and therefore require a much larger battery pack than a PHEV for the same size vehicle.

- Battery Charging Time

The amount of time to fully charge an EV battery is a function of the battery size and the amount of electric power or kilowatts (kW) that an electrical circuit can deliver to the battery. Larger circuits, as measured by voltage and amperage, will deliver larger amounts of kW. The common 110-120 volts AC (VAC), 15 amp circuit will deliver at minimum 1.1 kW to a battery. A 220-240 VAC, 40 amp circuit (similar to the circuit used for household appliances like dryers and ovens) will deliver at minimum 6 kW to a battery. Table 2-1 provides information on several different on-road highway speed electric vehicles, their battery pack size, and charge times at different power levels to replenish a depleted battery.

Table 2-1 EV Charge Times

		Circuit Size and Power in kW Delivered to Battery			
EV Configuration	**Battery Size (kWh)**	110 VAC, 15 amp **1.1 kW**	110 VAC, 20 amp **1.5 kW**	220 VAC, 40 amp **6 kW**	440 VAC, 85 amp **55 kW**
PHEV-10	**4**	3 h 50 m	2 h 40 m	40 m	n/a
PHEV-20	**8**	7 h 20 m	5 h 20 m	1 h 20 m	n/a
PHEV-40	**16**	14 h 30 m	10 h 40 m	2 h 40 m	17 m
BEV	**24**	21 h 48 m	16 h 00 m	4 h 00 m	26 m
BEV	**35**	31 h 50 m	23 h 20 m	5 h 50 m	38 m
PHEV Bus	**50**	n/a	n/a	8 h 20 m	55 m

Note: Power delivered to battery calculated as follows: 110VAC x 12Amps x.85 eff.; 110VAC x 16Amps x .85 eff.; 220VAC x 32 Amps x.85 eff.; 480VAC x √3 x 85 Amps x .85 eff.

D. Automaker Plans

Many automakers have announced plans for the introduction of on-road highway speed EVs in the near future. A summary table of such plans is shown in Figure 2-4 below.

Plug-In Hybrid Electric Vehicles

Company	Model	Price	Battery Type	Battery Size	EV Range (miles)	PHEV Type	Market launch	Production Capacity
BYD	F3DM	$21,915	Lithium-ion	-	62	-	2008	
BYD	F6DM	~$22,000	Lithium-ion	-	62	-	2008	
Fisker	Karma	$87,900	Lithium-ion	22 KWh	50	Series	2010	15k
Ford	Escape PHEV	-	Lithium-ion	10 KWh	30-40	-	2012	
GM	Chevrolet Volt	~$40,000+	Lithium-ion	16 KWh	40	Series	2010	60k by 2012
Opel	Ampera	-	Lithium-ion	16 KWh	40	Series	2012	
Toyota	Prius	~$48,000	Lithium-ion	-	12-18	Parallel	2010	20k-30k
Volkswagen	Golf Twin Drive	-	Lithium-ion	12 KWh	30	-	2010	20 car pilot

Electric Vehicles

Company	Model	Price	Battery Type	Battery Size	EV Range (miles)	Latest Model	Market launch	Production Capacity
BMW	Mini E	-	Lithium-ion	35 KWh	~100+	2009	n.d.	500 pilot
BYD	E6 EV	-	Lithium-ion	18 KWh	249	2009	2009	
Chery Auto.	S18 EV	~$15,000	Lithium-ion	13 KWh	93	2009	2009	
Chrysler	Dodge circuit	-	Lithium-ion	26 KWh	150-200	2010	2010	
Coda	EV Sedan	$45,000	Lithium-ion	34 KWh	90-120	2010	2010	
Ford	Focus EV	-	Lithium-ion	-	100	2011	2011	
Mitsubishi	iMiEV	~$46,000	Lithium-ion	16 KWh	100	2009	2009	20,000
Nissan	EV LEAF	~$24k to ~$34k*	Lithium-ion	24 KWh	100	2010	2010	150,000+
Renault	Fluence ZE (Better Place)	-	Lithium-ion	-	100	2011	2011	100,000
Smart	EV	-	Lithium-ion	-	70	2010	2010	
Subaru	Stella	$47,900	Lithium-ion	9 KWh	55	2009	2009	~170 in 2009
Tesla	Model S	$57,400	Lithium-ion	-	160-300	2011	2011	
Tesla	Roadster EV	$109,000	Lithium-ion	53 KWh	244	2009	2009	
Th!nk	City	$28,000	Sodium or Li	-	110	2010	2010	2,500 (US)

Source: Company data, Credit Suisse estimates

Figure 2-4 Automaker PHEV and BEV Plans[1]

[1] Credit Suisse "Electric Vehicles", Equity Research, Energy Technology/Auto Parts & Equipment, October 1, 2009

3. Charging Requirements

This section covers the terminology and general requirements of Electric Vehicle Supply Equipment (EVSE). EVSE provides for the safe transfer of energy between the electric utility power and the electric vehicle.

A. Charging Components

The terms used to identify the components in the delivery of power to the vehicle are defined first.

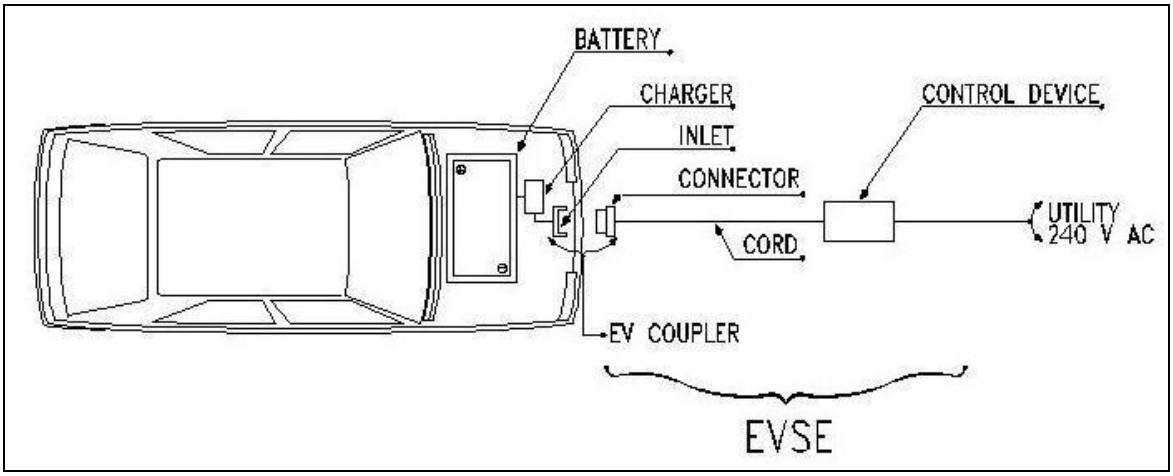

Figure 3-1 Level 2 Charging Diagram

Power is delivered to the EV's onboard battery through the EV inlet to the charger. The charger converts Alternating Current (AC) to Direct Current (DC) required to charge the battery. The charger and EV inlet are considered part of the EV. A connector is a device that, by insertion into an EV inlet, establishes an electrical connection to the electric vehicle for the purpose of charging and information exchange. The EV inlet and connector together are referred to as the coupler. The EVSE consists of the connector, cord and interface to utility power. The interface between the EVSE and utility power will be directly "hard-wired" to a control device as illustrated in Figure 3-1 or a plug and receptacle as illustrated in Figure 3-3.

In the 1990's there was no consensus on EV inlet and connector design. Both conductive and inductive types of couplers were designed and in both cases, different designs of each type were provided by automakers. At the present time, however, the Society of Automotive Engineers (SAE) has agreed that all vehicles produced by automakers in the United States will conform to a single design called the J1772 Standard.[2]

[2] While the J1772 Standard will be utilized by all automakers in the United States, it is not necessarily the standard to be used in other countries. It is the subject of a harmonization project with the Canadian Codes. A common connector is also the goal of European, Asian and North American designers.

J1772 Connector **J1772 Inlet (right side)**

Figure 3-2 J1772 Connector and Inlet (Preliminary)

The J1772 Standard EV coupler is designed for 10,000 connections and disconnections with exposure to dust, salt and water; is able to withstand a vehicle driving over it and is corrosion resistant.

The J1772 Standard and National Electrical Code requirements create multiple safety layers for EV components including:

- The EV coupler -
    - must be engineered to prevent inadvertent disconnection.
    - must have a grounded pole that is first to make contact and the last to break contact.
    - must contain an interlock device which prevents vehicle startup while connected.
    - must be unique to electric vehicle charging and cannot be used for other purposes.
- The EV inlet -
    - must be de-energized until it is attached to the EVSE.
    - must de-energize prior to removal of the connector.
- The EVSE -
    - must be tested and approved for use by Underwriters Laboratory (UL), or a similar nationally recognized, independent testing lab.
    - must be able to initiate area ventilation for those specific batteries that may emit potentially explosive gases.
    - must have a charge current interrupting device (CCID) which will shut off the electricity supply if it senses a potential problem that could result in electrical shock to the user.

In addition, when connected, the vehicle charger will communicate with the EVSE to identify the circuit rating (voltage and amperage) and adjust the charge to the battery accordingly. Thus an EVSE that is capable of delivering 20 amps will deliver that current even though connected to a 40 amp rated circuit.

The J1772 coupler and EV inlet will be used for both Level 1 and 2 charging levels, which are described below.

B. Charging Levels

In 1991 the Infrastructure Working Council (IWC) was formed by the Electric Power Research Institute (EPRI) to establish consensus on several aspects of EV charging. Level 1, Level 2 and Level 3 charging levels were defined by the IWC along with the corresponding functionality requirements and safety systems. EPRI published a document in 1994 that describes the consensus items of the IWC[3].

Note: For Level 1 and 2, the conversion of the utility AC power to the DC power required for battery charging occurs in the vehicle's on-board charger. In Level 3, the conversion from AC to DC power typically occurs off-board so that DC power is delivered directly to the vehicle.[4]

- **Level 1 – 120 volt AC**

The Level 1 method uses a standard 120 volts AC (VAC) branch circuit that is the lowest common voltage level found in both residential and commercial buildings. Typical voltage ratings can be from 110 – 120 volts AC. Typical amp ratings for these receptacles are 15 or 20 amps.

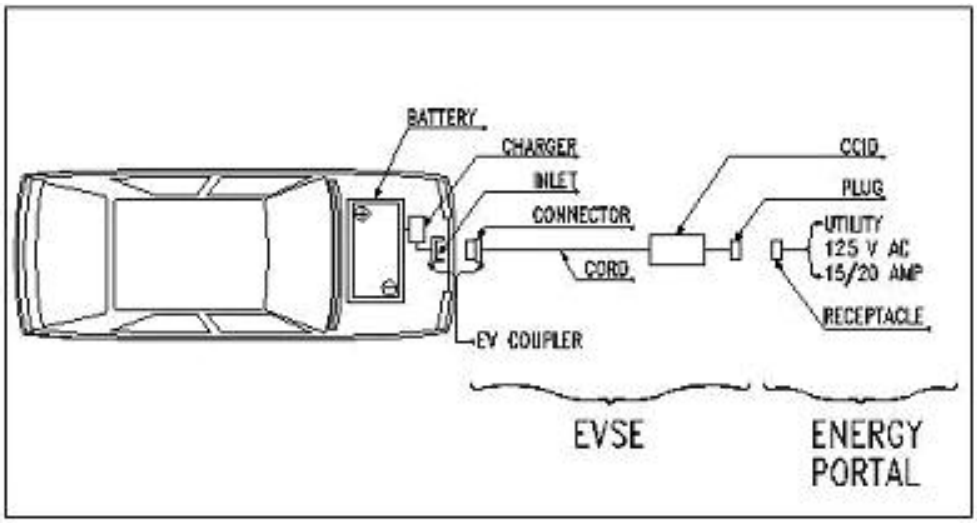

Figure 3-3 Level 1 Charging Diagram

[3] "Electric Vehicle Charging Systems: Volume 2" Report of the Connector and Connecting Station Committee, EPRI, December 1994.
[4] AC Level 3 (delivering high-power AC directly to the vehicle) is defined within the SAE J1772 document, but this approach has not been implemented as yet.

Figure 3-4 Level 1 Cord Set[5]

Level 1 charging typically uses a standard 3 prong electrical outlet (NEMA 5-15R/20R) to connect to premise wiring.

Future EV suppliers will likely provide a Level 1 Cord Set (125 VAC, 15 or 20 amp) with the vehicle. The Cord Set will use a standard 3-prong plug (NEMA 5-15P/20P) with a charge current interrupting device (CCID) located in the power supply cable within 12 inches of the plug. The vehicle connector at the other end of the cord will be the design identified in J1772 Standard. This connector will properly mate with the vehicle inlet also approved by J1772.

Because charge times can be very long at Level 1 (see Table 2-1), many EV owners will be more interested in Level 2 charging at home and in publicly available locations. Some EV manufacturers suggest their Level 1 Cord Set should be used only during unusual circumstances when Level 2 EVSE is not available, such as when parked overnight at a non-owner's home.

Several companies provide kits to convert internal combustion and hybrid vehicles to plug-in vehicles. Many of these conversions use a standard 3 prong electrical plug and outlet to provide Level 1 charging of their vehicles. With the standardization of EVs on the J1772 Standard and the higher level of safety afforded by a J1772 compliant charging station, existing vehicles will need to be retrofitted to accommodate a J1772 inlet in order to take advantage of the deployment of EVSE infrastructure.

- **Level 2 – 240 volt AC**

Level 2 is typically described as the "primary" and "preferred" method for the EVSE both for private and publicly available facilities and specifies a single phase branch circuit with typical voltage ratings from 220 – 240 volts AC. The J1772 approved connector allows for current as high as 80 amps AC (100 amp rated circuit). However, current levels that high are rare and a more typical rating would be 40 amps AC which allows a maximum current of 32 amps. This provides approximately 7.7 kW with a 240 VAC circuit.

[5] Conceptual Design for Chevy Volt, *Electrifying the Nation, PHEV Summit*, Tony Posawatz, January 2009

The higher voltage of Level 2 allows for a much faster battery charge. Because of the higher voltage, Level 2 has a higher level of safety requirements than Level 1 under the National Electric Code including the requirement that the connector and cord be hardwired to the control device and premise wiring as illustrated in Figures 3-1 and 3-5.

Figure 3-5 Level 2 Charging

.

- **Level 3 Charging**

Level 3 charging or "Fast Charging" is for commercial and public applications and is intended to perform in a manner similar to a commercial gasoline service station in that recharge is rapid. Typically, Level 3 would provide a 50% recharge in 10 to 15 minutes. Level 3 typically uses an off-board charger to provide the AC to DC conversion. The vehicle's on-board battery management system controls the off-board charger to deliver DC directly to the battery.

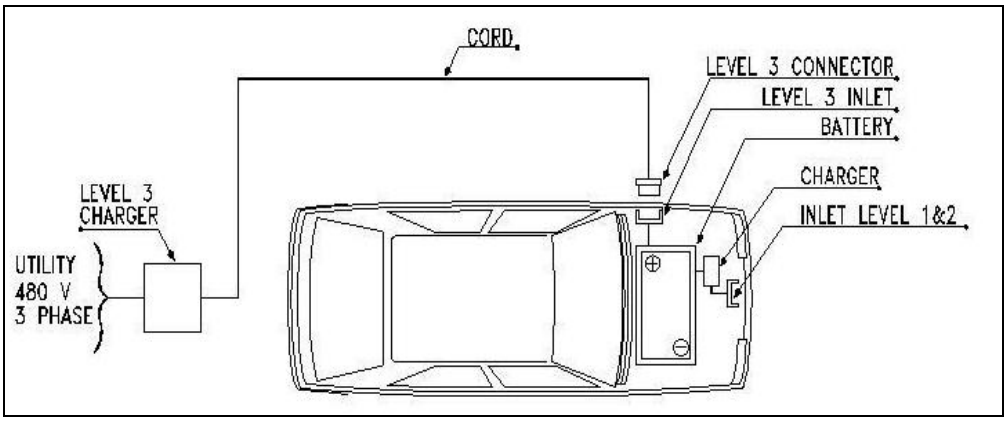

Figure 3-6 Level 3 Charging (DC Charging)

This off-board charger is serviced by a three phase circuit at 208, 480 or 600VAC. The SAE standards committee is working on a Level 3 connector, but has placed the highest priority in getting the Level 1 & 2 connector approved first. The Level 3 connector standard is expected to be approved in 2010.

eTec will be utilizing Level 3 equipment in infrastructure developed in 2010. Level 3 charging was accomplished by eTec for the Chrysler EPIC in the 1990s and for industrial applications since 1998. Similar, though smaller, equipment will be used for the coming generation of EVs.

Figure 3-7 Chrysler EPIC Level 3 Charging (90kW) circa 1997

Note: Although not as common, a vehicle manufacturer may choose not to incorporate an on-board charger for Levels 1 and 2, and utilize an off-board DC charger for all power levels. In this case, the electric vehicle would only have a DC charge port. Another potential configuration that may be found, particularly with commercial vehicles, is providing 3-phase power directly to the vehicle. This configuration requires dedicated charging equipment that will be non-compatible with typical publicly available infrastructure.

C. Level 1 versus Level 2 Considerations

For a BEV (and some PHEV owners who choose the utility time of use rates), the preferred method of residential charging will be Level 2 (240VAC/single phase power) in order to provide the EV owner a reasonable charge time and to also allow the local utility the ability to shift load as necessary while not impacting the customer's desire to obtain a full charge by morning. For other PHEV owners, a dedicated Level 1 circuit may adequately meet the owner's charging needs.

BEV owners who have the opportunity for Level 2 charging at work or in public areas may find the vehicle battery remains at a higher charge and thus home charging time is not a concern and Level 1 will suffice. See Figure 2-1 for relative battery sizes and estimated recharge times.

D. General Requirements

This section identifies general requirements of EVSE.

- **Certification:** EVSE will meet the appropriate codes and standards, and will be certified and so marked by a Nationally Recognized Testing Laboratory (e.g. Underwriters Laboratories). Owners should be cautioned against using equipment that has not been certified for EV use.

- **Cord Length:** The EVSE will provide a maximum of 25 feet of flexibility from the wall location to the EV Inlet. This figure was obtained by taking the typical 15 foot car length to the 7 foot car width plus 3 feet to the EVSE permanent location. The EV Inlet location on the EVs will vary by manufacturer; however, this standard length should be sufficient to reach from a reasonably positioned EVSE to the Inlet.

- **Tripping hazard**: An extended EV cord may present a tripping hazard so the EVSE should be located in an area of minimum pedestrian traffic. An alternative would be to consider installation of an overhead support or trolley system to allow the cord to hang above the vehicle in the location of the EV inlet.

- **Ventilation Requirements:** If there are ventilation requirements, the EVSE will be required to energize a properly sized ventilation system. Such a requirement is expected to be rare since automobile manufacturers are expected to use non-gassing batteries. Some EV owners who convert their own vehicles to electric or purchase conversions vehicles may use gassing batteries. The approved EVSE will communicate with the vehicle and if ventilation is required but no ventilation system exists, the EVSE will not charge the vehicle. In multi-family or parking garage situations that may already have ventilation systems for exhaust of normal vehicle emissions, such a system would be expected to be sufficient. However, calculations should verify this result. It may also be impractical to wire the charger to the ventilation controls or costly to run the system for a single vehicle charging. In these cases, it may be prudent to identify that the chargers are intended for non-gassing batteries only.

- **Energized Equipment:** Unless de-energized by the local disconnect, the EVSE is considered electrically energized equipment. Because it operates above 50 volts, Part 19 Electrical Safety of the Occupational Health and Safety (OHS) Regulation requires guarding of live parts. EVSE may be positioned in a way that requires a physical barrier for its protection. Wheel stops are recommended to prevent a vehicle from contacting the EVSE. They also help position the EV for the optimum location for charging.

Figure 3-8 Wheel Stop[6]

Figure 3-9 Garage Wheel Stop[7]

[6] Rubberform Recycled Products LLC, www.rubberform.com
[7] ProPark Garage Wheel Stop, www.organizeit.com

- **Shortest Run**: In addition to the above requirements, the lowest cost installation generally is the location closest to the electrical supply breaker because it minimizes the conduit run to the charger.

- **Ergonomics/Ease of Use:** Most EV owners will find it most convenient to have the EVSE located near the EV inlet. In some cases, it may be desirable to back into the garage which helps reduce the tripping hazard while at the same time reduces the electrical circuit run to the EVSE.

4. Charging Scenarios

A. Single Attached/Detached Garages

- **Power Requirements:**

Level 1: Dedicated branch circuit with NEMA 5-15R or 5-20R Receptacle.

Level 2: Dedicated branch circuit hardwired to a permanently mounted EVSE with the following specifications: 240VAC/Single Phase, 4-wire (2 Hot, GND, Neutral), 40Amp Breaker.

- **Level 2 Notes:**

1. The breaker size recommended will meet the requirements of most all BEVs and PHEVs. Some PHEVs with small battery packs (See Table 3.1) may only require a 20 or 30Amp breaker for their recommended EVSE in which case the breaker can be easily changed.
2. The Neutral may not be required by some EVSE but since it is inexpensive to include and may be required at some point in the future if a different vehicle is purchased it is recommended.
3. For new construction, bring the circuit to a dual gang box with a cover plate for future installation of EVSE.
4. For new construction that is incorporating an advanced internet network within the home, an internet connection at the EVSE location would be advisable. For existing homes, the value of providing an internet connection at the EVSE location is unknown at this time and is left up to the individual homeowner. It is likely that wireless methods will be available where a hard connection is not available.
5. Many Level 2 EVSE suppliers will provide controls in the EVSE to control charging to programmable times to take advantage of off-peak power pricing. If not, home owners may desire to install a timer device in this circuit to control charging times.

- **Siting Requirements**

An indoor rated EVSE is acceptable for an enclosed garage. The EV owner will likely prefer a particular location for the EV. However, the EV should be positioned so that the above general requirements are considered. This often means the EV will be the furthest away from the residence entry into the garage.

The installation of the EVSE at the front of the vehicle may be acceptable unless the cord becomes a tripping hazard. Often the EVSE will be placed on an exterior wall to shorten the distance from the electrical box and at the same time positioning the EVSE out of the way.

If the EVSE is to be installed after the EV has been purchased, the location of the EV inlet will play a part in the location of the EVSE. It is best to keep the EVSE as close to the inlet as possible to minimize the cord splayed on the floor. If the branch circuit is installed prior to the EV purchase, the garage junction box should be on the

wall closest to the utility service connection consistent with the general requirements above. Typical locations are shown in the figure below.

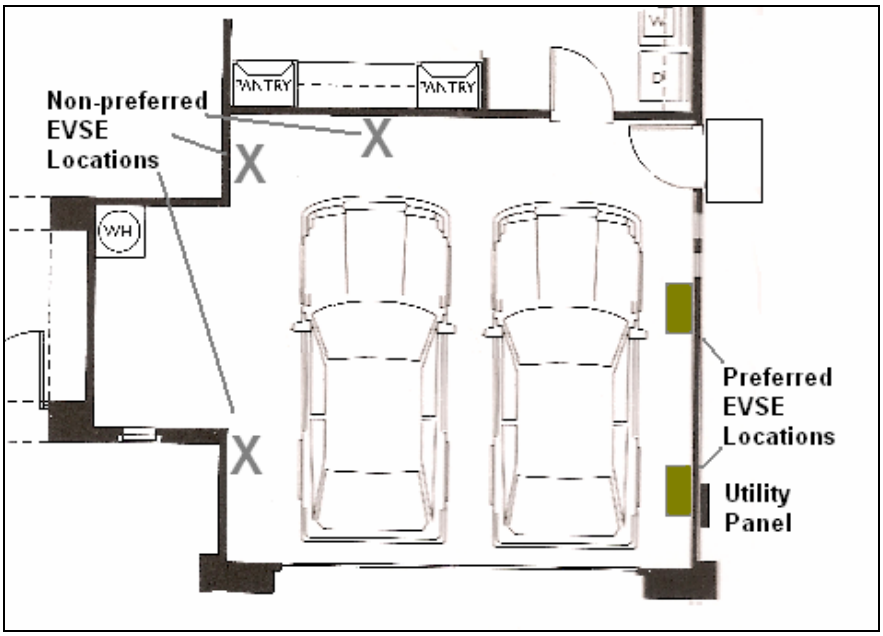

Figure 4-1 Double Garage Location for EVSE

In the above figure, the best location would be for the EV on the right. The non-preferred EVSE locations are in typical walking areas and could present a tripping hazard. In addition, these are further away from the utility panel. An option for the EV owner's desire to place the EVSE in these locations could be accommodated by using an overhead support of the charge cable and connector. If the EV inlet is on the left side of the vehicle, the owner could consider backing into the garage.

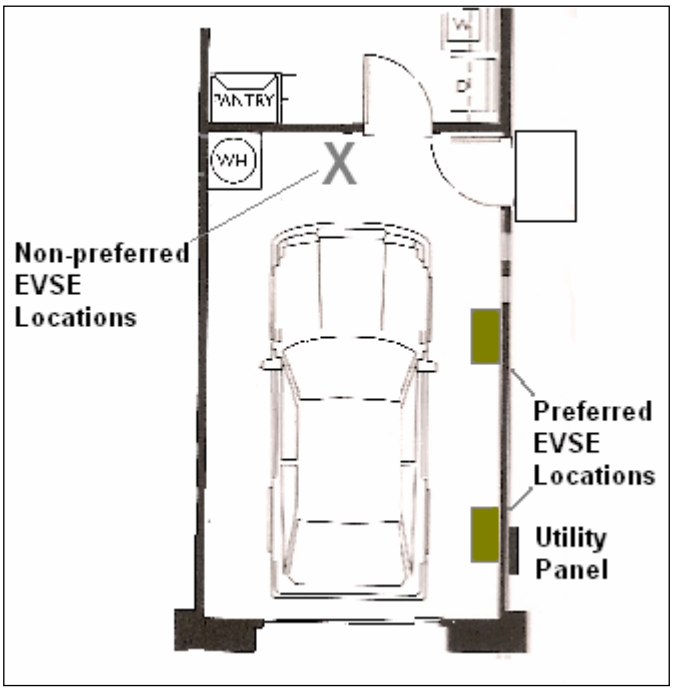

Figure 4-2 Typical Single Garage Location for EVSE

In the single garage environment, most locations will be acceptable for locating the EVSE except perhaps at the head of the vehicle because of tripping concerns. The preferred locations are selected because of proximity to the utility panel. Again, consideration of overhead support of the EVSE cable would allow EVSE installation where the owner prefers.

The National Electrical Code provides additional requirements should the EVSE be located in a hazardous area. The other materials stored in the garage should also be considered when locating the EVSE if they are determined to be of a hazardous nature.

Detached garages will include additional considerations in routing the electrical supply to the garage. Landscaping will be disrupted during the installation process. This may be of great significant to the owner and should be thoroughly planned in advance.

- **Installation Process**

Installation of the EVSE in a residential garage typically consists of installing a dedicated branch circuit from an existing house distribution panel to an EV outlet receptacle (125 VAC, 15/20 A) in the case of Level 1 charging or an EVSE (operating at 240 VAC, 40 A) for Level 2 charging. If the garage is built with the conduit or raceway already installed from the panel to the garage, the task is greatly simplified.

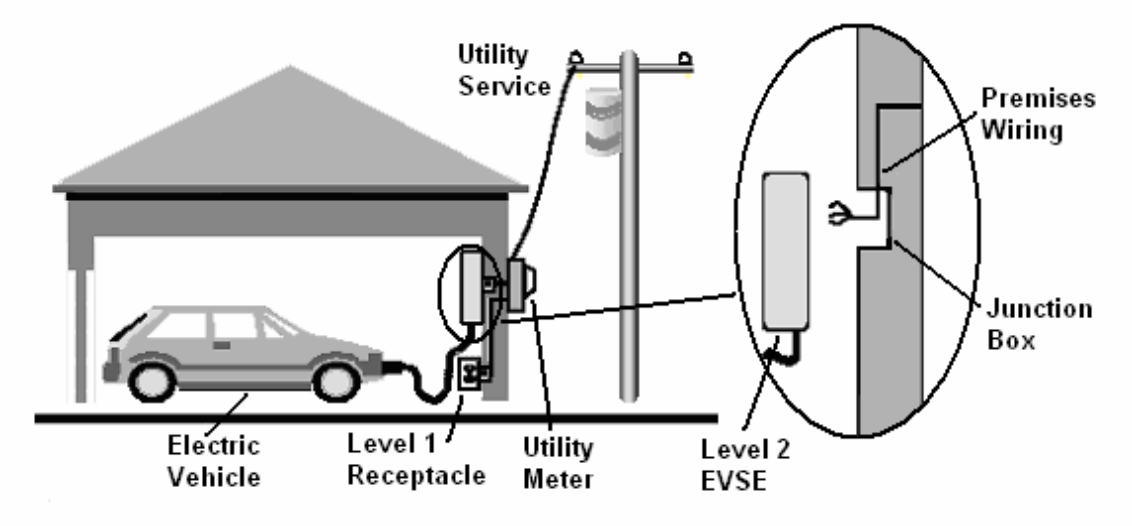

Figure 4-3 Typical Level 1 and Level 2 Installations for a Residential Garage

The specific steps involved in this process are shown in the flowchart below. In general, they include:

- Consultation with the EV dealer to determine whether Level 1 or Level 2 EVSE is required, whether ventilation will be required and what EVSE to purchase
- Consultation with the electric utility to determine rate structure, requirements for a special or second meter
- Consultation with a licensed electrical contractor to plan the installation effort including location of EVSE, routing of raceway from utility service panel to EVSE, Level 1 or Level 2 requirements, ventilation requirements, adequacy of current utility service, and obtain installation quote
- Submission of required permitting documents and plans
- Completion of EVSE installation and utility service components, if required
- Inspection of final installation

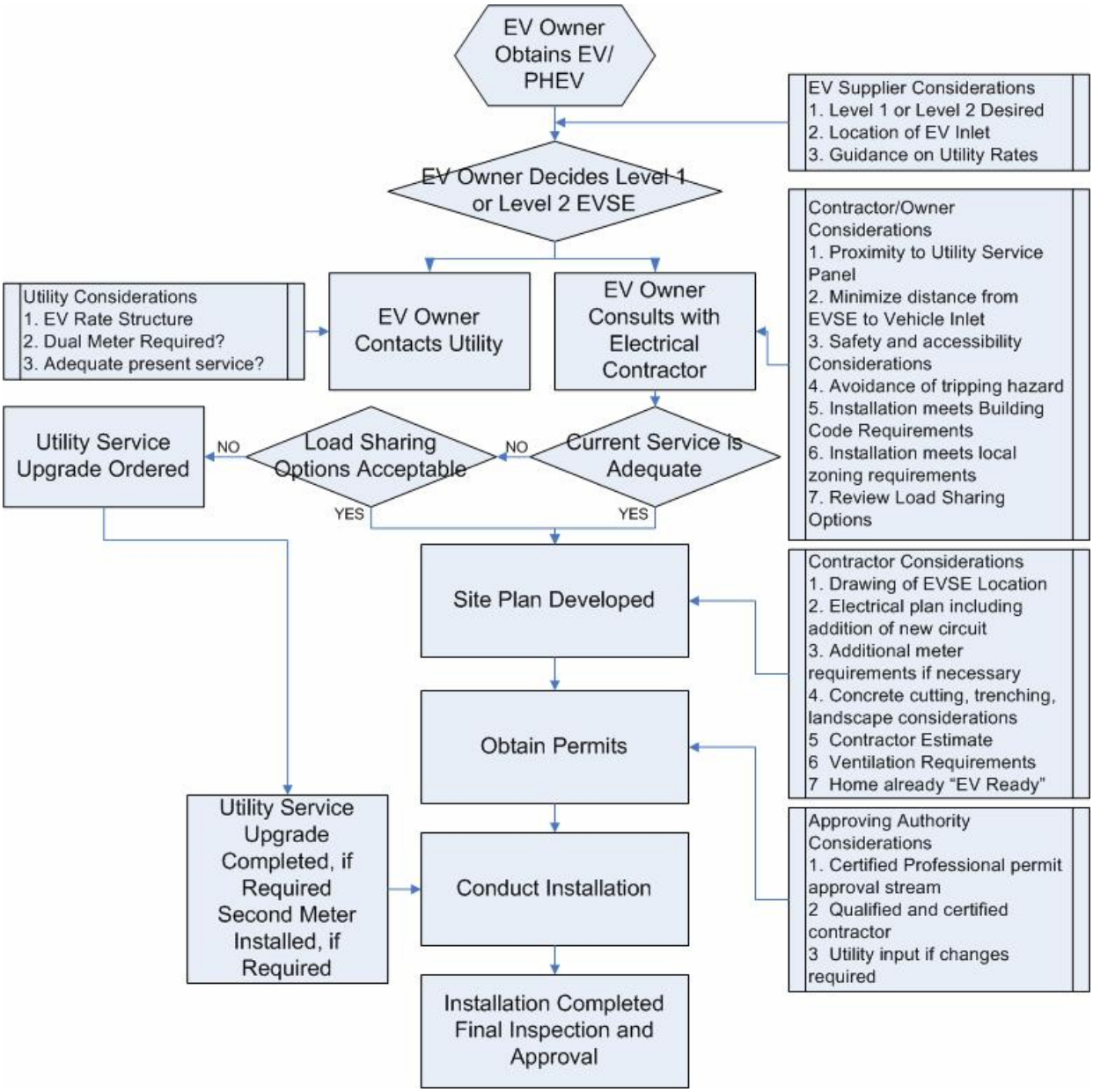

Figure 4-4 Installation Process for a Residential Garage/Car Port

If the garage has a pre-existing raceway, a 120 VAC, 15/20 amp circuit or a 240 VAC, 40 amp circuit can be installed. Some homes may not have sufficient utility electrical service to install this circuit. In that case, either a new service must be added as noted or installation of an approved load control device may allow the homeowner to avoid a major panel upgrade and the utility to avoid upgrading the electrical service to the homeowner.

Although a new home may already have the raceway installed, a permit for the service is required. Increasingly, standards are directing that a raceway for an electric vehicle will be included in new home construction. The conductors may or

may not be included. If included, consideration should be given to sizing the conductors for the 240 VAC, 40 amp circuit required for Level 2 charging but installing the 125 VAC, 20 amp Level 1 breaker and receptacle. The home owner would have a functional circuit that could be upgraded easily to Level 2 if desired.

Contact a local electrical contractor to evaluate the options of adding a new service or upgrading the existing service, as utility fees may apply.

B. Car Port

- **Power Requirements:**

  Power requirements are the same as Garage scenario above**.**

- **Siting Requirements**
  The siting requirements for the car port will include those identified above for the garage. Some owners may elect to place the EVSE in the garage but charge a vehicle outdoors. This is similar to the car port requirements. A car port is considered an outdoor area and the EVSE should be properly designed for exterior use. Consideration must be given to precipitation and temperature extremes. In geographic areas that experience high precipitation, pooling of water in the car port or driveway may be a concern. While the EVSE is safe, owners may have a concern about standing in pooled water while connecting the EVSE. Consultation with the owner will be required when locating the EVSE.

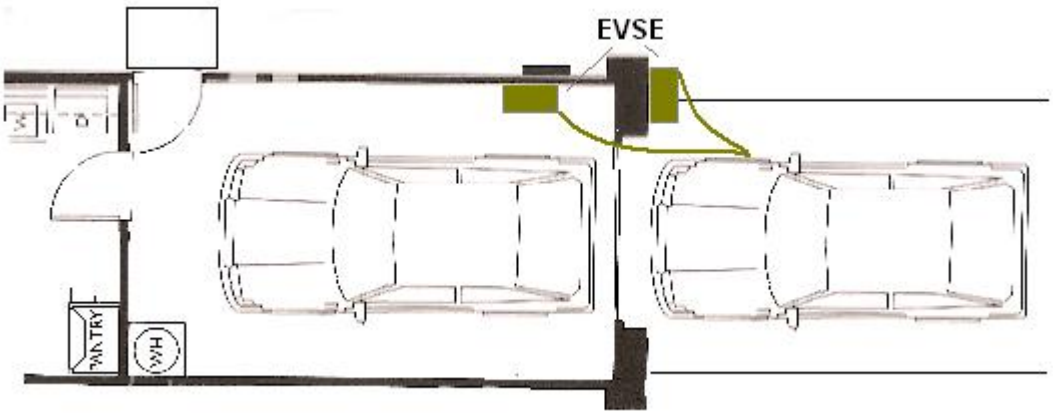

Figure 4-5 Installation Considerations for Outdoor Parking

Freezing temperatures can create an issue for cords freezing to the parking surface and cord support should be considered. Adequate lighting is an addition consideration along with mitigating efforts to prevent vandalism as noted in Section 5 below. The installation process is similar to the garage process outlined above.

- **"Consultation with Landlord or HOA"**
  An installation in a multi-family location may involve a more lengthy approval process for zoning considerations. The local zoning requirements may require a public hearing or pre-approval by a Design Review Committee.

C. Multi-Family Dwellings

- **Power Requirements**:

Power requirements are the same as Garage scenario above.

- **Siting Requirements**

In multi-family dwellings, there will be additional considerations because the apartment or condominium owner must also be involved in any siting decisions. It is best that the potential EV owner work through the details identified here prior to purchasing an EV. A site close to the owner's dwelling will be desired but may not be in the best interests of the apartment owner. Special flooding or drainage conditions may apply. Lighting and vandalism concerns will exist. Payment methods for the electrical usage will need to be identified. There may be insurance and liability questions as well as damages if vandalized. All the concerns should be discussed prior to the EV purchase.

Should the EV owner later relocate, the electrical installation raceway and panel upgrades, if any, will be retained at the multi-family location. Ownership of the EVSE needs to be identified clearly. If the EV owner takes the EVSE, site restoration may be required. Circuit removal or de-energizing methods should be settled. Discussion with the utility is also required since there may be metering questions or issues to be resolved. In condominiums, the Home Owners Association (HOA) may be involved to approve EV additions.

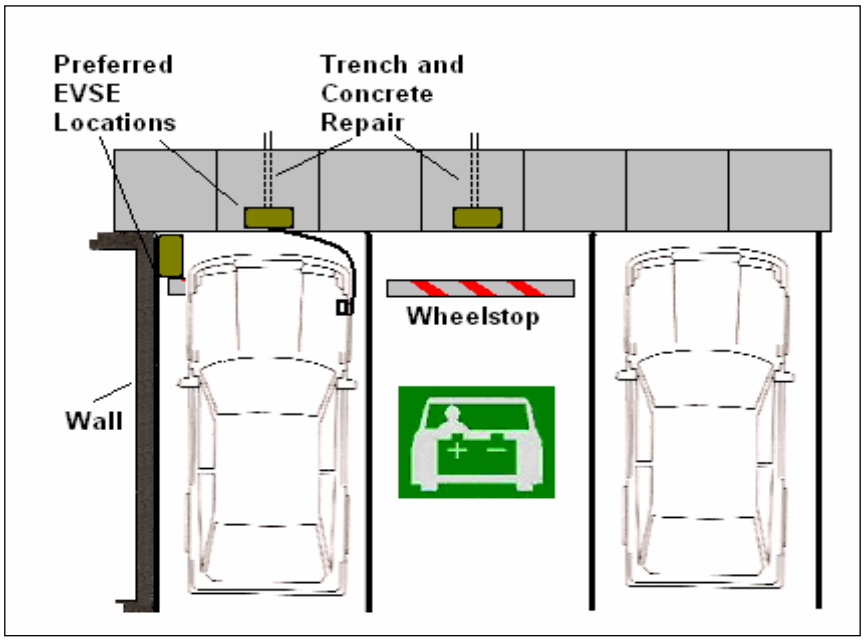

Figure 4-6 Typical EVSE Installation in Multi-Family Lot

In general, the EVSE will need to be outdoor rated unless the location is well protected from the environment. The installation of the EVSE at the front of the vehicle may be the only choice unless an adjacent wall is available. If located at the front of the parking stall, the EVSE should be located on the vehicle side of any walkway to minimize the cord becoming a tripping hazard. The walkway for pedestrians would be on the back side of the EVSE. Because a wheel stop will be installed, consideration should also be given to make sure the EV parking is not in an area of normal pedestrian traffic in order to avoid pedestrians tripping over the wheel stop when no vehicle is present.

Trenching and concrete work and repairs are likely. Consideration must be given to maintaining a safe and secure area around the parking stall to avoid tripping hazards or EVSE interference with other operations.

- **Installation Process**

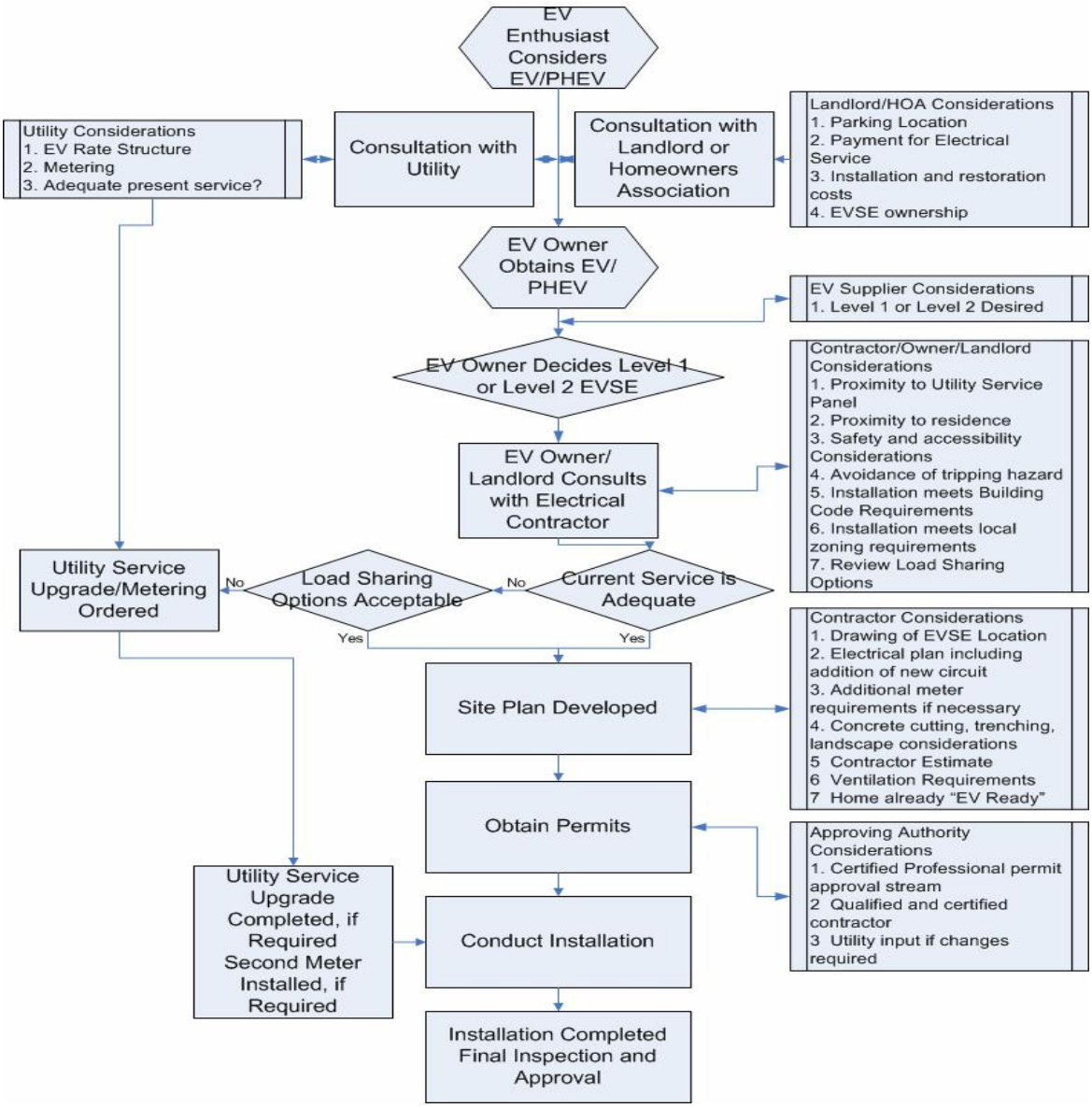

Figure 4-7 Installation Process for Multi-Family

If the parking area has a pre-existing raceway, the wishes of the EV owner and property owner can determine whether this will be a 120 VAC, 15/20 amp circuit or a 240 VAC, 40 amp circuit. This would also require review by the electrical contractor to make sure the service panel is sufficient to support the choice. Although a raceway may have been installed previously, a permit for the service is required.

- **Multiple Parking Stall Installation**

In a new construction or retrofit situation, broad charging infrastructure installation in a multi-residential building will require the services of an electrical consultant to determine the best approach for the situation. For example, the proponent may consider a load control strategy to manage the charging load within the capacity of the electrical service to the building rather than upgrading the service size to accommodate increased building load from electric vehicle charging.

D. Commercial Fleets

- **Power Requirements**

Dedicated branch circuits hardwired to permanently mounted EVSE with the following specifications: 208VAC or 240VAC / Single Phase, 4-wire (2 Hot, GND, Neutral), 40Amp Breaker

Commercial fleet charge stations will likely include multiple charge locations and therefore with new construction the additional will need to be planned for when sizing the main service entrance section (SES). Since it is likely that most of the charging will occur during working hours, for existing buildings, the additional load may require an upgrade or new SES and/or utility supply.

Because of a potentially large electrical load, it is recommended that a network connection is provided in close proximity to the charge stations. This connection may be required for interface with the building energy management system or to implement local utility load control strategies.

- **Siting Requirements**

Commercial fleets make up the highest population of EVs at the present time. Utilities, governmental agencies and other private fleets have been encouraged and are encouraging the private adoption of EVs. A significant amount of planning is required to correctly size the EV parking and charging area. Consideration is given to the current requirements as well as anticipated future requirements. Electrical service requirements will be much higher than residential or multi-family installations and can have a significant impact on electrical usage and on the utility. For that reason, electrical utility planners need to be involved early on in the fleet planning process.

The individual home owner will be interested in charging his/her vehicle off-peak. That interest will be greater for the fleet manager.

Flood prone area restrictions must be considered as well as issues of standing water. Often large parking lots will have low spots where water accumulates. Although the Level 2 EVSE contains the proper protection device, employees will not be comfortable operating the EVSE in standing water.

Installation of the EVSE in a commercial facility typically consists of installing new dedicated branch circuits from the central meter distribution panel to a Level 2 EVSE. In a commercial fleet, there are typically many such EVSE units in adjacent parking stalls. Proximity to the electrical service is an important factor in locating this parking area. The length of the circuit run and the quantity will have a significant impact on the cost.

Because these EVSE units are in a designated area, the potential for pedestrian traffic is less and more consideration can be given for the most economical installation methods. In addition, the commercial nature of the site will allow greater overall security, such as fences and gates, so that the threat of vandalism is minimized.

Fleet managers must also be aware of other equipment to be stored in the vicinity of the EVSE. It is important that a hazardous environment does not already exist in the area planned.

Fleet manager interest and priorities can also stimulate the development of Level 3 charging. The higher recharge rate means a shorter turn-around for each vehicle and maximizes on-road time. The 480/600 VAC is generally available in commercial facilities.

Figure 4-8 Level 2 Commercial EV Charging Location

- **Installation Process**

The installation process is similar to the processes shown above except that much more detailed planning is involved prior to the owner's final decision and obtaining permits.

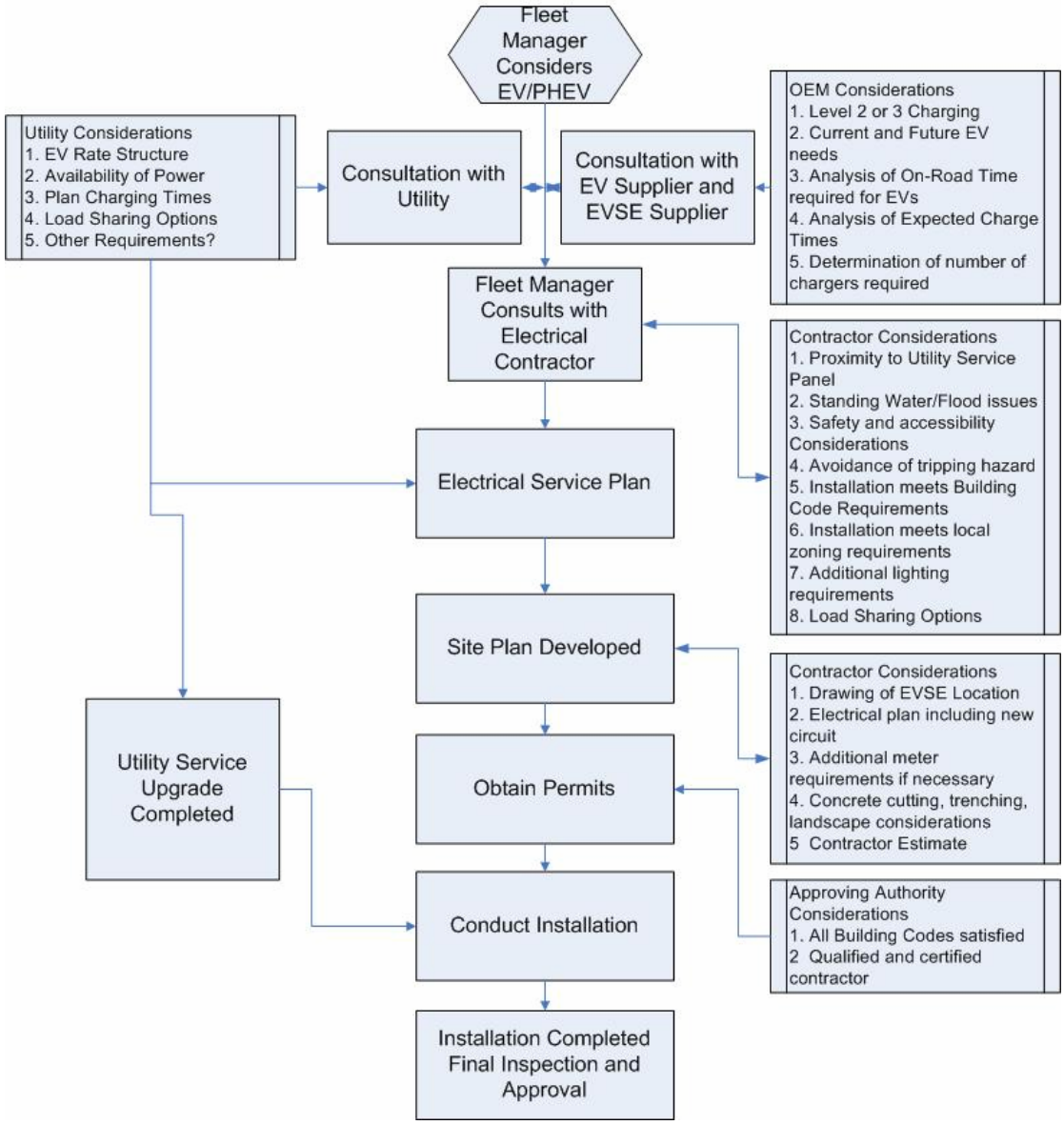

Figure 4-9 Installation Process for Commercial Fleet Operations

E. Publicly Available Charging Stations

A significant factor in the consumer adoption of EVs will be the ability to extend the range of battery only power. This can be accomplished by the wise installation of publicly available charging locations. The EV Micro-Climate© program focuses on this area because of its importance.

Publicly available charging may employ a mix of Level 1, 2 and 3 charging stations, however, the charge return generated by a dedicated Level 1 charging station will be minimal for a BEV and its use is not recommended nor included in the EV Micro-Climate©. The recommended configuration for a publicly available Level 2 charging station is one equipped with J1772 connector. This will accommodate all vehicles equipped with a J1772 inlet including PHEVs and other EVs that require lower kW charging than a BEV.

Publicly available charging may be served by either Public or Commercial charging stations. Public charging stations are those EVSE installed on public owned property such as city or county property. Curbside chargers are a typical example. Commercial charging stations are those EVSE installed on private or commercial property such as retail locations.

The determination of publicly available Level 2 EVSE charging sites should focus on locations where the EV owner will be parked for a significant period of time i.e. 1 – 3 hours. An appreciable recharge can occur during this time period. Locations where owners can be expected to park for this time include restaurants, theaters, shopping malls, governmental facilities, hotels, amusement parks, public parks, sports venues, arts productions, museums, libraries, outlet malls, airports visitor lots, major retail outlets, among many other choices.

Businesses, such as electric utilities or those that wish to promote EV usage will install public charging near their building entrance in highly visible areas even though EV owner stay times may be shorter. As noted above, these stations should be Level 2.

The determination of publicly available Level 3 EVSE charging sites should focus on locations where the EV owner will be parked for a relatively short period of time, i.e. 15 minutes, where an appreciable recharge can occur during this time period. Locations where owners can be expected to park for this time include convenience stores, coffee houses, service stations, drug stores, and fast food restaurants among many other choices. For Level 3, the availability of 480/600 VAC will be a consideration.

Publicly available charge stations will vary greatly in design and requirements. They also include a number of other requirements not found in residential and fleet applications such as signage and Point-of-Sale systems, as described in section 5.

- **LEED Building Certifications**

A driving force in the design, construction and operation of facilities is the Leadership in Energy and Environmental Design (LEED) Green Building Rating System. It was developed by the U.S. Green Building Council and it provides standards for environmentally sustainable construction and operation of facilities. It requires a study of the CO_2 emissions by company personnel and encourages through monetary incentives or preferred parking the use of alternative fuel vehicles. It provides credits for installing EV charging stations and suggests certain percentages of parking be devoted to alternative fuel vehicles. These locations will apply to employees as well as public using the facility. Companies interested in being LEED certified are excellent sites for publicly available charging stations.

- **Power Requirements**

Level 2: Dedicated branch circuits hardwired to permanently mounted EVSE with the following specifications: 208VAC or 240VAC / Single Phase, 4-wire (2 Hot, GND, Neutral), 40Amp Breaker

Level 3: Dedicated branch circuit hardwired to permanently mounted charger supplied with the circuit as specified in the installation manual. Level 3 chargers rated up to

30kW they may require either 208AVC/3-Phase or 480VAC/3-Phase. For Level 3 chargers greater than 30kW, they will likely require 480VAC/3Phase.

Example Sizes:

1. For 30kW Output Power, typical input power requirements are:

   208VAC/3-Phase, 4-wire (3-Hot, GND), 125 Amp Breaker, -or-

   480VAC/3-Phase, 4-wire (3-Hot, GND), 60 Amp Breaker

2. For 60kW Output Power, typical input power requirement is

   480VAC/3-Phase, 4-wire (3-Hot, GND), 125 Amp Breaker

Communication will likely be desired for any publicly available charge stations, but it is not necessarily required. Wireless methods will most likely be utilized, but if a hard-wire internet connection is available it is generally desired over wireless.

- **Siting Requirements**

Siting requirements for publicly available charging are similar to other stations previously noted but involve many additional considerations. Questions such as ownership, vandalism, payment for use, maintenance, and data collection are addressed in following sections.

Flood prone area restrictions must be considered as well as issues of standing water or high precipitation. As noted above, people will not be comfortable operating the EVSE in standing water. Unlike Fleet use, the area designated for Public use should be in a preferred parking area. Also unlike Fleet use, the area is public and the threat for vandalism will be greater. This will likely be in a high pedestrian traffic area so the considerations for placement of the charger to avoid the charge cord or the wheelstop from being tripping hazards is very important.

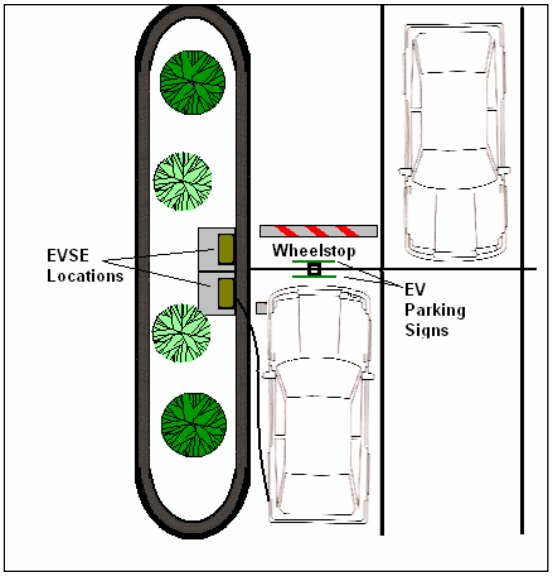

Figure 4-10 Example Publicly Available Charging Layout

There are several ways to address the protection of the equipment, shelter, signage and pedestrian safety. The following pictures provide several examples.

Figure 4-11 Publicly Available Charging Examples

Some publicly available charging will be driven by commercial businesses interested in promoting electric vehicle use through personal preference or as part of the LEED certification. They may decide on their own to purchase and install systems or participate in such costs. Other business owners will be receptive to placement of chargers in their parking lots once approached with incentives. And other public, private and governmental agencies will install EVSE out of support for EVs. Mapping these selected locations will provide input to an overall municipal plan identifying the ideal sites to ensure wide coverage of publicly available charging.

Publicly available sites will also invoke accessibility requirements and the quantity of parking stalls with EVSE that are accessible and van accessible. This is further discussed in Section 5.

Lighting and shelter are extremely important in public sites. The EV owner must feel safe when parking at night in addition to being able to read directions and properly locate the EV connector and insert into the EV inlet. An indoor stall in a parking structure or a sheltered stall in the outdoor parking lot provides additional convenience for the EV owner.

Installation of the EVSE in a public area typically consists of installing new dedicated branch circuits from the central meter distribution panel to a Level 2 EVSE. There will likely be many such EVSE units in adjacent parking stalls. Proximity to the electrical service is an important factor in locating this parking area. The length of the circuit run and the quantity will have a significant impact on the cost.

The cost of providing power to the EV parking location must be balanced with the convenience of the parking location to the facilities being visited by the EV owner. It may be more convenient for the EV owner for a large shopping mall to have two or three EV parking areas rather than one large area although the cost for the three will be greater than the cost for the one.

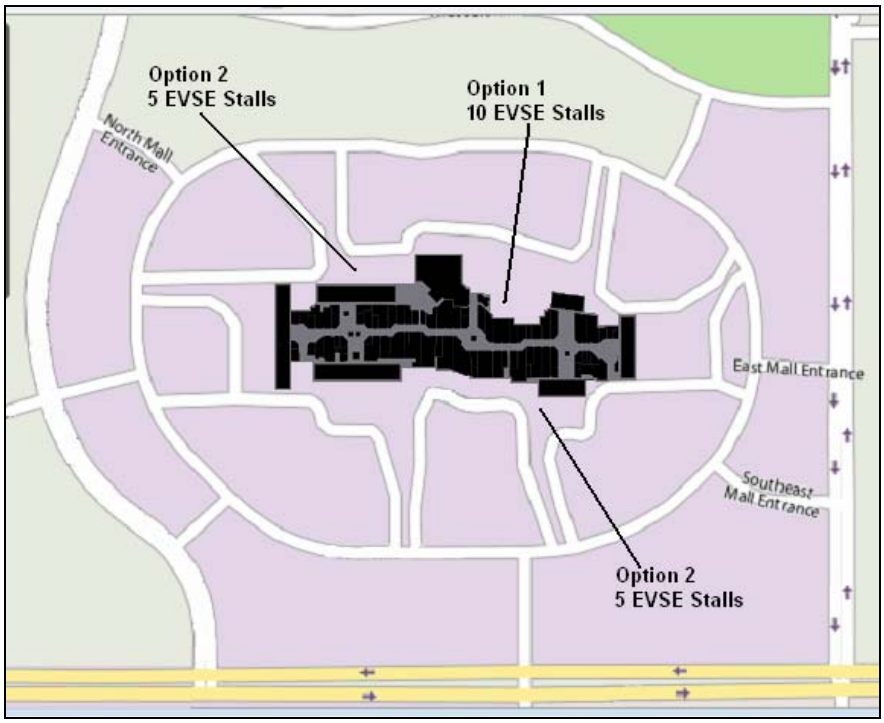

Figure 4-12 Example Shopping Mall EVSE Parking

The local area aesthetics are also important and they may require the installation of landscaping or screening walls to shield the electrical transformer, panel or other equipment from the public eye.

Trouble reporting can be very important in public charging areas. Each publicly available charging area should be equipped with a method whereby the EV user can notify the equipment owner of trouble found with the equipment. Public satisfaction will suffer if stations are found to be out of service or not kept in an appealing condition. This may be a normal business call number or a service call number which monitors many publicly available charging locations. This will require a communications line. At a minimum, a sign may be posted at the EVSE location directing comments to a particular office or store location.

Figure 4-13 Indoor Charging

Figure 4-14 Outdoor Charging

- **Installation Process**

The installation process is similar to the processes shown above except that a lot more detailed planning is required prior to submittal of plans for obtaining permits.

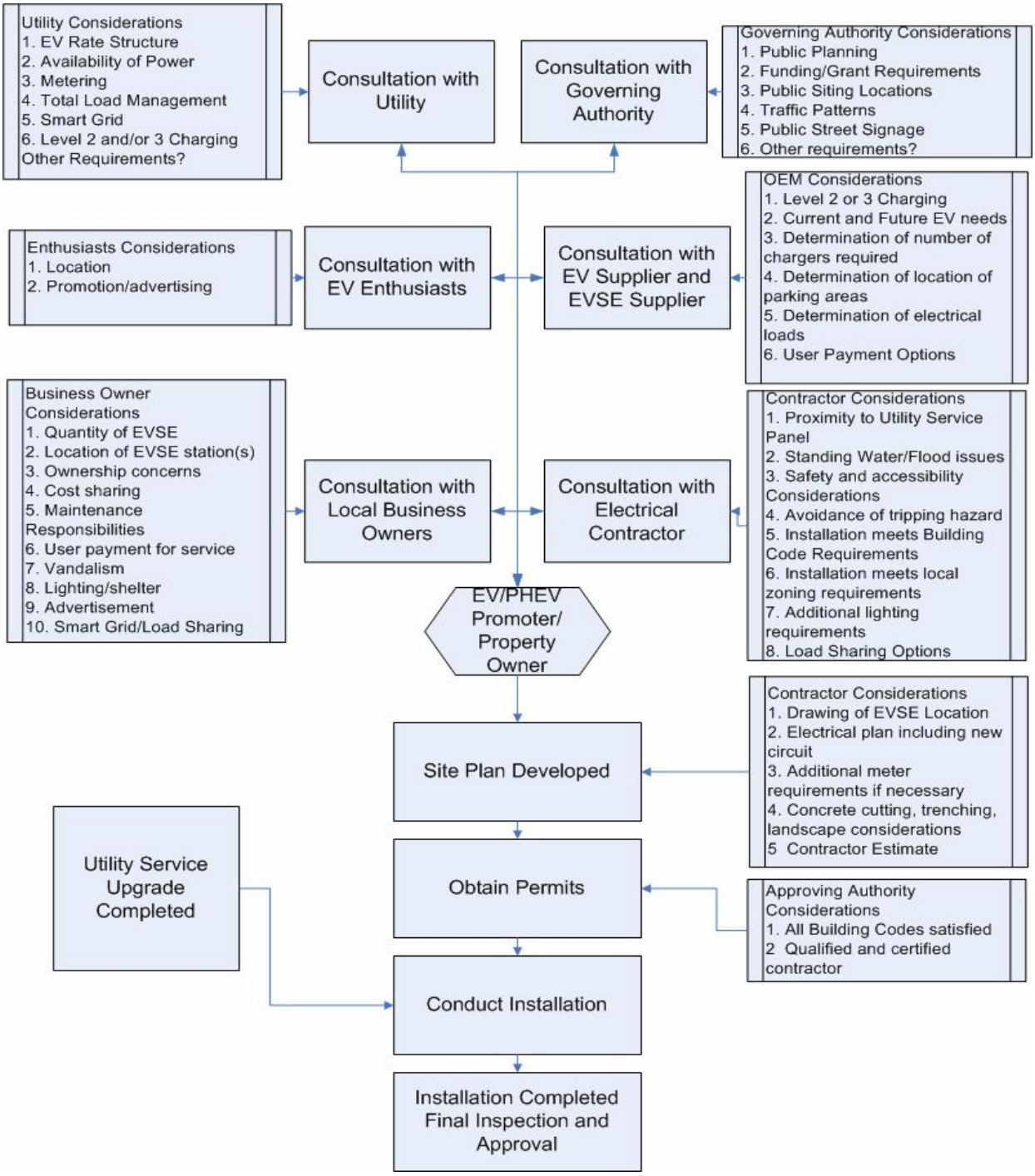

Figure 4-15 Installation Flowchart for Public Charging

The quality of the advance planning will determine the quality of the final installation and ultimately, the EV owner's acceptance and satisfaction.

- **Curbside Charging**

Curbside Charging is not necessarily associated with a commercial business. Generally speaking, these areas are owned by the municipality rather than private interests. Many of the same considerations noted above apply.

Figure 4-16 Curbside Charging

5. Additional Charging Considerations

A. Signage

In addition to the signs and warnings required by NEC identified in Section 6, information signage is recommended for publicly available charging stations and, if it is an accessible station, signage should be as described in Section D. below. A variety of signs have been used in locations throughout North America. The following signs are typical for use by these guidelines.

Figure 5-1 EV Parking Signs

Previous experience has shown that confusion can exist if the signage is blue in color as it can be mistaken for an accessible location. For that reason, green may be the best choice for background color. Local control over parking may include penalties for non EV vehicles parking in EV parking stalls. In Arizona and California in the mid 1990s, the sign in the middle above seemed to be gaining the most traction. It most clearly identified the electric vehicle symbol and was easily recognized.

Wide spread adoption of EVs will include maps or websites identifying charging locations. It is helpful to post EV parking area signs on adjacent streets and access points directing EV drivers to the charging locations.

B. Lighting and Shelter

For commercial, apartment, condo and fleet charging stations, adequate lighting is recommended for safety and convenience. Shelter is not typically required for outdoor rated equipment. For geographic locations that have significant rainfall or snow, providing shelter over the charging equipment will provide added convenience to potential EV users. Locations within parking garages or private garages that are well protected from the environment may utilize EVSE that is not specifically outdoor rated.

Lighting should be sufficient to easily read associated signs, instructions, or controls on the EVSE and provide sufficient lighting around the vehicle for all possible EV Inlet locations.

Figure 5-2 Public Charging with Shelter and Lighting

In residential garages or car ports, lighting is also important so that pedestrians can avoid tripping over extended charge cords while the EV is charging.

C. Disability Requirements

Building code accessibility requirements do not currently specifically address EVs. Certain requirements were added to the National Electric Code for EVSE and some municipalities provide guidance for accessible EV parking locations.

It is important that persons with disabilities have access to the EV Coupler and access around the vehicle in order to connect with the vehicle inlet. Whether indoor or outdoor, this means that the EV Coupler should be stored or located at a height of not more than 4 ft and not less than 24 in. above the parking surface.

Accessible parking stalls should be provided. An accessible stall is at least 8-feet wide by 18-feet deep which includes an access aisle of 5 feet on the passenger side. A van accessible space is the same size with an 8 foot access aisle on the passenger side. Note that it is important that the placement of the EVSE should allow adequate space for a wheelchair to pass the wheelstop.

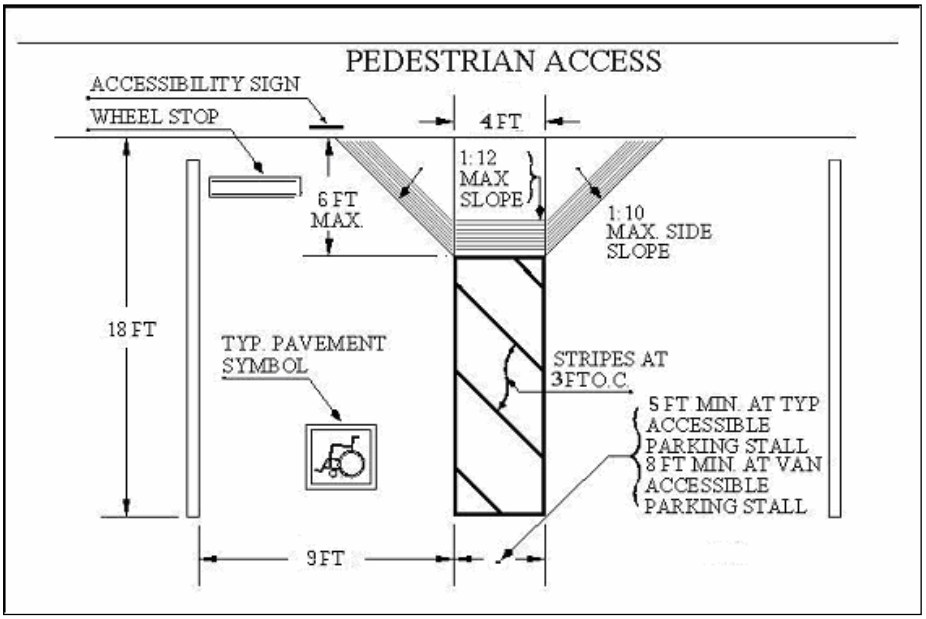

Figure 5-3 Parking Accessibility Requirements

EV parking should be provided in premium locations similar to accessible locations. Because stalls containing EVSE should be for EVs only, the accessible parking stalls should be in addition to those required by building codes.

The Americans with Disabilities Act identifies requirements where parking stalls for persons with disabilities shall be provided. These are typically included in local building codes and municipal areas may provide greater requirements. There are no current standards for accessible EV parking. It is suggested that where there are EV charging stations included in the parking area, for every 25 parking stalls with EVSE, one should be accessible. For every 10 accessible stalls, one should be van accessible.

Table 5-1 Accessibility Requirements

EV Parking Stalls	Accessible Stalls	Van Accessible Stalls
1	1	1
2-25	1	1
26-50	2	1
51 – 75	3	1
76 – 100	4	1

EV accessible parking stalls are typically not exclusive in that EV drivers who do not need accessibility requirements may park in these locations if they are the last space available for charging.

Figure 5-4 Typical Sign for Accessible Parking

D. Safety Issues related to Indoor Charging

The possibility of invoking the ventilation requirements or hazardous environment requirements of the NEC exists when installing indoor charging. When the EVSE connector makes contact with the EV inlet, the pilot signal from the vehicle will identify whether that the battery requires ventilation. While most BEV and PHEV batteries do not require ventilation systems, some batteries, such as lead acid or zinc air, emit hydrogen gas when charged. Most vehicle manufacturers will identify clearly that their batteries do or do not require ventilation. Without adequate ventilation, the hydrogen gas concentration may increase to an explosive condition. The Lower Flammability Limit of hydrogen in air is 4% mixture by volume. Locations are hazardous when 25% of the limit is reached or 1% mixture by volume. The EVSE contains controls to turn on the ventilation system when required and also to stop charging should that ventilation system fail.

Recognizing that hydrogen is lighter than the air mixture, concentrations would exist near the ceiling. The ventilation system should take this into account to exhaust high and replenish lower.

Indoor charging can also provide a challenge with respect to lighting, tight access and other material storage. Often areas of an enclosed garage can be poorly lighted and when combined with the tight access around the vehicle and other equipment stored in and around the vehicle parking stall, the possibility of personal injury from tripping exists.

E. Installations Located in Flood Zones

Permits for construction of facilities, including EV charging stations, include reviews to determine whether the site is located in a flood prone area. The Code of Federal Regulations, Title 44 Emergency Management and Assistance, Part 60 Criteria for Land Management and Use includes the following requirement:

> "If a proposed building site is in a flood-prone area, all new construction and substantial improvements shall (i) be designed (or modified) and adequately anchored to prevent flotation, collapse, or lateral movement of the structure resulting from hydrodynamic and hydrostatic loads, including the effects of buoyancy, (ii) be constructed with materials resistant to flood damage, (iii) be constructed by methods and practices that minimize flood damages, and (iv) be constructed with electrical heating, ventilation, plumbing, and air conditioning equipment and other service facilities that are designed and/or located so as to

prevent water from entering or accumulating within the components during conditions of flooding."[8]

For EVSE components, the two primary ways to minimize flood damage, prevent water from entering or accumulating and be resistant to flood damages involve elevation and component protection. These measures are required by the National Flood Insurance Program (NFIP).

Elevation refers to the location of a component above the Design Flood Elevation (DFE). That is the primary protection for EVSE. All locations approved for EVSE installation should be above the DFE. It may mean that the EVSE is located outside a garage if inside would be below the DFE. It may mean that certain areas of a condominium parking lot would not contain any EVSE if that elevation is not achievable. It may require EVSE charging stations on the third level of a parking garage instead of the first.

Component Protection refers to the implementation of design techniques that protect a component from flood damage when they are located below the DFE.

Wet floodproofing refers to the elimination or minimization of the potential of flood damage by implementing waterproofing techniques designed to keep floodwaters away from utility equipment. In this case, the rest of the structure may receive damage but the EVSE is protected by barriers or other methods.

Dry floodproofing refers to the elimination or minimization of the potential for flood damage by implementing a combination of waterproofing features designed to keep floodwaters completely outside of a structure.[9] If the entire building is protected from flood water, the EVSE is also protected.

F. Point of Sale Options

During the early adoption stage of EV ownership, most owners of publicly available charging stations will absorb the cost of the electricity used since this actual cost is low per use. However, as the public acceptance and ownership of EVs grow, more will favor having the option for point of sale. In most areas, only electric utilities can actually sell electricity so fee for convenience/service will likely be the strategy. Often a credit card transaction fee will well exceed the electricity cost of charging an EV. However, the availability and convenience of charging will be a service the public will desire and purchase. A fee for service can assist the EVSE owner in recovering equipment, installation, service and maintenance costs. Several options for point of sale options exist.

- **Card Readers**

Several types of card readers exist that may be incorporated with the EVSE. Credit/debit card readers would be simple to use and are already widely accepted

[8] 44CFR60.3(a)(3)
[9] FEMA Publication 348 *Principles and Practices for the Design and Construction of Flood Resistant Building Utility Systems,* November 1999

by the public. The credit/debit card would record a fee for each time the publicly available charging is accessed and based upon the accessibility rather than length of time on charge.

A smartcard is a card that is imbedded with a microprocessor or memory chip and it can more securely store more detailed information than a credit/debit card. The smartcard could be sold as a monthly subscription and imbedded with more information on the user. That information could be captured in each transaction and used for data recording as noted in Section H below. The smartcard could be used for a pre-set number of charge opportunities or to bill a credit card number for each time of use.

In both cases, a communication system from the reader to a terminal for off-site approval and data recording will be required. Approval received may then close a contact for power to be supplied to the EVSE. The cost of this system and its integration into the EVSE will be a design consideration.

Figure 5-5 Smartcard Reader[10]

- **Parking Area meters**

People are very familiar with parking meters used in public parking. A simple coin operated meter is an option for EV parking areas and can be installed at the head of each EVSE parking stall. Another method in common use is for public pay parking lots where a central kiosk is used for credit card purchases. The parking stall number is identified at the kiosk and a parking receipt issued that can be displayed in the vehicle. There is little cost for the meter and a single kiosk reduces the point of service cost for the whole parking lot. This system will require an attendant to periodically monitor the area for violations. Penalties for violators will need to be determined. A coin operated meter also may invite vandalism.

[10] ACR-38 Smart Card Reader by Advanced Card Systems

- **Radio-Frequency Identification (RFID) Subscription Service**

Like the smartcard, an RFID fob can be programmed with user information. The RFID reader collects the information from the fob to activate the EVSE station. A monthly subscription for the user keeps the fob active and the monthly fee can be based upon number of actual uses or a set fee. The reader is programmed for the accepted RFID.

Figure 5-6 RFID Fob[11]

Figure 5-8 RFID Reader and Communications Terminal

[11] Texas Instruments RFID

G. Data Collection

More than simply recording payment for service, the use of a smartcard or RFID can substantially increase the amount of information available at each publicly available charging station. Data collection systems can track usage at each of the stations and provide feedback on actual EV usage. It may be found that usage at some venues is lighter than expected whereas others may be heavier. This information could be helpful in expanding publicly available charging locations. In addition, the time of day usage may show peak usage at expected or perhaps unexpected times which may impact power utilization. Some EVSE may include features to allow a wide range of data to be collected.

H. Vandalism

Publicly available charging carries the possibility of vandalism and theft. Destruction of property through purposeful defacing of equipment is a possibility, however, such destruction actually proved to be very minor during EV usage in the mid 1990s. Still, as public acceptance and the quantity of publicly available charging sites continue to grow, steps should be taken to minimize this possibility.

Most EVSE can be constructed of materials that will clean easily and removal of graffiti can be accomplished. Careful planning on site locations to include sufficient lighting and equipment protection will discourage damage and theft. Motion sensor activated lighting may be a benefit to users and a deterrent for abusers. EVSE with cable retractors or locking compartments for the EVSE cord and connector may be designed. Location of the EVSE in security patrolled areas or within sight of manned centers will discourage vandalism.

EVSE Owners in condominiums and apartments may desire to protect the equipment with a lockable secure cabinet to prevent unauthorized use and for vandalism protection.

I. Station Ownership

Ownership of the individual charging station may not be entirely clear. A business owner may wish to host publicly available charging but may not have the legal right to the parking lot or for making improvements. Charging stations constructed with public grants or other financing may have split ownership. One entity may own the charger and another may own the infrastructure. The sale of a business may include the EVSE or the sale of the property may include both. EVSE may be rented or leased equipment. Before planning any installation, it is important to identify the entities that have legal rights with respect to the equipment and its installation. Whose approvals are required to obtain the permits and whose approvals are required to remove the equipment later?

For individual EV owners, the ownership of the EVSE should reside with the owner. The ownership of the installation should reside with the property owner. However, both may share legal responsibilities and liabilities for the equipment and both should be protected by insurance.

For publicly available charging, there may be a combination of owners. Utilities may wish to own and manage the public charging infrastructure in order to manage power requirements. In a successful EV market penetration, ownership of new public charging

may shift to private ownership. Several businesses may join together to promote EV usage and may share in the EVSE ownership. However, there should be one individual business entity tasked with the responsibility of ownership along with proper contact information to be shared with the local utility.

J. Maintenance

The EVSE typically will not require routine maintenance. However, all usable parts can wear and periodic inspections should be conducted to ensure that all parts remain in good working order. Periodic cleaning may be required depending upon local conditions. Testing of communications systems and lighting should be conducted periodically. Repair of accidental damage or purposeful vandalism may also be required. Unless otherwise agreed, these responsibilities generally fall to the owner identified in Section G above.

6. Codes and Standards

In the initial introduction of EVs in the early 1990s, stakeholders representing the automotive companies, electric utilities, component suppliers, electric vehicle enthusiasts, equipment manufacturers and standards and national testing organizations worked to obtain consensus on items regarding the methods and requirements of EV charging. This resulted in revisions to building codes, electric codes, first responder training, and general site design and acceptance documentation. These requirements are designed to protect the public and make EVSE accessible for use.

Equipment is designed to standards set by organizations, such as Society of Automotive Engineers, and is tested through certifying laboratories, such as Underwriters Laboratories. This certifies the equipment is suitable for its designed purpose. The equipment installation is required to follow the rules of the National Electric Code and the Building Codes. Both of these codes can be modified by State or local governing bodies. Frequently the codes will also affect the standards as is the case for Electric Vehicles.

Regulatory Agencies hold the responsibility of monitoring the installation to ensure that the proper codes and standards are being implemented in order to protect the public health and safety.

A. Regulatory Agencies

Arizona Revised Statutes (A.R.S.) adopted and enacted into law by the state of Arizona grants communities within the state the authority to incorporate and form a common council.

The municipal corporation now known as “The Common Council of the City of Phoenix” has the power, granted it by state statute 9-240(B) to, within the limits of the town, control and regulate construction and related activities. This council also established the Development Services Department of the City of Phoenix.

The municipal corporation now known as the “City of Tucson” has the power, granted it by state statute 9-240(B) to, within the limits of the town, control and regulate construction and related activities. This council also established the Building Safety Administrative of the City of Tucson.

Development Services Department (DSD)

The business of DSD is to enforce building codes and other development elated ordinances by reviewing building, site and civil construction plans for compliance, issuing permits, inspecting construction and issuing a certificate of completion or occupancy.

Building Safety Administration BSA

The business of BSA is to enforce building codes and other development elated ordinances by reviewing building, site and civil construction plans for compliance, issuing permits, inspecting construction and issuing a certificate of completion or occupancy.

B. National Electric Code

Ordinance No. G-4885, adopted April 11, 2009, effective July 1, 2009 contains the administrative provisions for the City of Phoenix Building Code, including the adoption of the National Electric Code and others.

Ordinance No. 10417, adopted June 12, 2007 contains the administrative provisions for the City of Tucson's adoption of the 2005 National Electric Code and others.

The National Electric Code (NEC) is part of the National Fire Code series established by the National Fire Protection Association (NFPA) as NFPA 70. The NEC codifies the requirements for safe electrical installations into a single, standardized source. It is adopted by state and local jurisdictions and may be modified by those jurisdictions. When identifying the electrical requirements for EVSE installation, it is also important to check local requirements as well. The NEC is updated every three years. The current approved edition is 2008.

Section 625 of the NEC specifically addresses Electric Vehicles. Specific requirements are highlighted here for information purposes but this is not intended to be a substitute for the actual document.

- Section 625.9: The electric vehicle coupler shall comply with
    - A) Polarization. The electric vehicle coupler shall be polarized unless part of a system identified and listed as suitable for the purpose.
    - (B) Non-interchangeability. The electric vehicle coupler shall have a configuration that is non-interchangeable with wiring devices in other electrical systems.
    - I Construction and Installation. The electric vehicle coupler shall be constructed and installed so as to guard against inadvertent contact by persons with parts made live from the electric vehicle supply equipment or the electric vehicle battery.
    - (D) Unintentional Disconnection. The electric vehicle coupler shall be provided with a positive means to prevent unintentional disconnection.
    - (E) Grounding Pole. The electric vehicle coupler shall be provided with a grounding pole, unless part of a system identified and listed as suitable for the purpose in accordance with Article 250.
    - (F) Grounding Pole Requirements. If a grounding pole is provided, the electric vehicle coupler shall be so designed that the grounding pole connection is the first to make and the last to break contact.
- Section 625.13 Electric Vehicle Supply Equipment.
    - Electric vehicle supply equipment rated at 125 volts, single phase, 15 or 20 amperes or part of a system identified and listed as suitable for the purpose and meeting the requirements of 625.18, 625.19, and 625.29 shall be permitted to be cord-and-plug-connected. All other electric vehicle supply equipment shall be permanently connected and fastened in place.
- Section 625.14 Rating:
    - Level 1. 125vac. This method, which allows broad access to charge an EV, permits plugging into a common, grounded 125-volt electrical receptacle (NEMA 5-15R or 5-20R) when cord-and-plug is approved.

    - Level 2. 240 VAC, 40 amp. electric vehicle supply equipment shall be permanently connected and fastened in place.
- Section 625.15 Marking
    - All EVSE shall be marked “FOR USE WITH ELECTRIC VEHICLES” and “VENTILATION NOT REQUIRED” or “VENTILATION REQUIRED”
- Section 625.16 Means of Coupling.
    - The means of coupling to the electric vehicle shall be either conductive or inductive. Attachment plugs, electric vehicle connectors, and electric vehicle inlets shall be listed or labeled for the purpose
- Section 625.17 Cable.
    - The electric vehicle supply equipment cable shall be Type EV, EVJ, EVE, EVJE, EVT, or EVJT flexible cable as specified in Article 400 and Table 400.4.
    - The overall length of the cable shall not exceed 7.5 m (25 ft) unless equipped with a cable management system that is listed as suitable for the purpose.
- Section 625.18 Interlock.
    - Electric vehicle supply equipment shall be provided with an interlock that de-energizes the electric vehicle connector and its cable whenever the electrical connector is uncoupled from the electric vehicle. An interlock shall not be required for portable cord-and-plug-connected electric vehicle supply equipment intended for connection to receptacle outlets rated at 125 volts, single phase, 15 and 20 amperes
- Section 625.19 Automatic De-Energization of Cable.
    - The electric vehicle supply equipment or the cable-connector combination of the equipment shall be provided with an automatic means to de-energize the cable conductors and electric vehicle connector upon exposure to strain
- Section 625.22 Personnel Protection System.
    - The electric vehicle supply equipment shall have a listed system of protection against electric shock of personnel…Where cord-and-plug-connected electric vehicle supply equipment is used, the interrupting device of a listed personnel protection system shall be provided and shall be an integral part of the attachment plug or shall be located in the power supply cable not more than 300 mm (12 in.) from the attachment plug
- Section 625.25 Loss of Primary Source.
    - Means shall be provided such that, upon loss of voltage from the utility or other electrical system(s), energy cannot be back fed through the electric vehicle and the supply equipment to the premises wiring system unless permitted by 625.26.
- Section 625.26 Interactive Systems.
    - Electric vehicle supply equipment and other parts of a system, either on-board or off-board the vehicle, that are identified for and intended to be interconnected to a vehicle and also serve as an optional standby system or an electric power production source or provide for bi-directional power feed shall be listed as suitable for that purpose.
- Section 625.29 Indoor Sites
    - (B) Height. Unless specifically listed for the purpose and location, the coupling means of the electric vehicle supply equipment shall be stored

or located at a height of not less than 450 mm (18 in.) and not more than 1.2 m (4 ft) above the floor level.

- Section 625.30 Outdoor Sites.
    - (B) Height. Unless specifically listed for the purpose and location, the coupling means of electric vehicle supply equipment shall be stored or located at a height of not less than 600 mm (24 in.) and not more than 1.2 m (4 ft) above the parking surface.

C. SAE and UL

Currently, the Society of Automotive Engineers (SAE) has determined that there will be a single conductive coupler design. J1772 "SAE Electric Vehicle Conductive Charge Coupler" is the standard that is being used by automotive suppliers in the United States. While J1773, the Inductive Charge Coupler is still active, none of the automakers are using this method.

Applicable SAE Standards include:

- SAE J1772
- SAE J2293
- SAE J2847
- SAE J2836
- SAE J2894
- SAE J551

SAE J2293 establishes requirements for EV and the off- board EVSE used to transfer electrical energy to an EV from a utility source. This document defines, either directly or by reference, all characteristics of the total EV Energy Transfer System (EV-ETS) necessary to insure the functional interoperability of an EV and EVSE of the same physical system architecture. The ETS, regardless of architecture, is responsible for the conversion of AC electrical energy into DC electrical energy that can be used to charge the Storage Battery of an EV. J2847 provides specifics on digital communications. J2836 provides use case for digital communications between vehicle and EVSE. J2894 addresses on-board charger power quality. J551 provides standards for electromagnetic compatibility.

Underwriters Laboratories (UL) provides testing and certification that equipment complies with relevant standards especially in areas involving public safety. The following UL standards form a basis for certifying EVSE:

- UL 2202 Electric Vehicle (EV) Charging System Equipment
- UL 2231-1 Personnel Protection Systems for Electric Vehicle (EV) supply Circuits: General Requirements
- UL 2231-2 Personnel Protection Systems for Electric Vehicle (EV) supply Circuits: Particular Requirements for Protection Devices for Use in Charging Systems
- UL 2251 Plugs, Receptacles and couplers for Electric Vehicles

Equipment that successfully completes the testing is “certified”, “approved” or “listed” as meeting the standard. In general, the SAE and UL requirements are more restrictive and are expected to be incorporated in harmonized standards.

D. Construction Codes for the Cities of Phoenix and Tucson

The Code of the City of Phoenix codified through Ordinance No. G-5434, adopted Oct. 7, 2009, effective Nov. 6, 2009

Ordinance No. G-4885, adopted April 11, 2009, effective July 1, 2009 contains the administrative provisions for the City of Phoenix building Code, Residential Code, Energy Conservation Code, Fuel Gas Code, Electrical Code, Mechanical, Code, Existing Building Code and Elevator Code.

SECTION 105.1 of the Phoenix Building Code establishes the requirements for building permits. Except as specified in Section 105.2 of these administrative provisions, no building structure or building service equipment regulated by this Code shall be erected, constructed, enlarged, altered, repaired, moved, improved, removed, converted or demolished unless appropriate permits for each building, structure or building service equipment has first been obtained from the Development Services Department.

The survey of code adoption table identifies the building codes that member agencies have adopted. These codes include: building, mechanical, plumbing, electric, residential, fire, energy, fuel, and performance. Most MAG member agencies have adopted or are in the process of adopting the 2006 I-Codes.

For example, here are the following Code Adoptions for the City of Phoenix:

Building – 2006 IBC
Mechanical – 2006 IMC
Electric – 2005 NEC
Residential – 2006 IRC
Fire – 2003 IFC
Energy – 2006 IECC
Existing Building Code – 2006 IEBC
Fuel – 2006 IFGC
Performance – 2006 ICCP for Buildings and Facilities

The Tucson Code of Ordinance Part 1 Sec.1, in parts, grants the city the power to adopt and enforce codes.

Part ll of the Code of Ordinance is the “Tucson Code”. Chapter 6 addresses building codes. Sec.6-34 adopted the “International Building Code” with local amendments by Ordinance 10417 which includes the National Electrical Code (NEC) by reference.

E. Occupational Safety and Health

Under the Occupational Safety and Health Act of 1970, OSHA's role is to assure safe and healthful working conditions for working men and women; by authorizing enforcement of the standards developed under the Act; by assisting and encouraging the States in their efforts to assure safe and healthful working conditions; by providing

for research, information, education, and training in the field of occupational safety and health.[12]

The Arizona State Department of Labor and Industries publishes the Safety and Health Core Rules, which are the basic safety and health rules needed by most employers in The State of Arizona.

F. Engineering, Permitting & Construction

The process flowcharts identified above all require the electrical permitting of the work. A typical permit application will include the name of the owner or agent, the physical address where the work will be conducted, the voltage and amperage of the system, the name, address and license number of the qualified contractor and whether additional trades will be involved.

Service load calculations may be required. The electrical contractor will review the current service loading and consider the rating of the EVSE to be installed. A new loading calculation then will determine whether the existing service panel is adequate or new service is required. Many inspectors will require the calculation to be submitted with the permit application.

It is recommended that local methods be considered to streamline the permitting process for residential EVSE installations. For BEV purchasers, the Level 1 Cord Set provided with the vehicle will require a significant charge period so that a Level 2 EVSE will be desired. Keeping the time span from purchase to fully functional and inspected EVSE installation will be important for customer satisfaction.

Installation drawing requirements may vary by jurisdiction to include simply layouts for residential installations to a full set of plans for public charging. In general, an electrical contractor can complete the requirements for residential garage circuits.

For fleet and public charging, an engineering company is recommended to prepare the detailed site plans for installation. Several trades may be involved including general contracting, electrical, landscaping, paving, concrete, masonry, and communications systems. As noted above, careful planning is required to coordinate this effort and an engineering company can provide the detailed set of drawings that will be required. In addition, there may be several permitting offices involved with the approval of these plans. Prior to any actual on-site work, the permit must be approved and posted at the site. The permit will identify periodic inspections and approvals of work if necessary. Work shall not be concealed until the inspection is completed and work approved.

[12] OHSA website www.osha.gov

7. Utility Integration

A. Background

Electric utilities are under significant pressure to maintain a dependable, clean and low cost electrical supply to their customer base. In order to achieve these goals, utilities are evaluating and in some cases implementing Smart-Grid technologies that allow them to control various electrical loads on their system. Through these Smart-Grid technologies, utilities can minimize new power plant, and electrical distribution and transmission investment by shifting and controlling load while minimizing the impact to the customer.

Advanced Metering Infrastructure (AMI) or Smart-Meters are being deployed by utilities to provide remote meter reading. Smart Meters also have the ability to control various customer loads.

Electric vehicles are one of the better loads to control for the utilities through Smart Meters because EVs have an on-board storage system and delaying the charge of the battery has no noticeable impact on the customer unlike a lighting or air-conditioning load which can have an immediate impact on the customer when turned off. Additionally, a neighborhood transformer may not be sized for every EV owning customer in an area to be charging at the same time. The ability to schedule the EV charging connected to a neighborhood transformer could significantly extend the life of that transformer or even delay or remove the requirement to replace the transformer with a larger size.

As the adoption of EVs increases, load control strategies for multi-family dwellings may allow the utility to control the charge times to maximize effectiveness and utilization of existing transformers.

During residential EVSE installations, the electrical contractor will evaluate the electrical service capabilities of the existing system. If inadequate power is available at the service entrance, an additional service panel or other upgrade may be required. Some homes may benefit from a load controller to avoid this upgrade.

The electrical contractor will coordinate with the local utility to evaluate the least cost method, as utility fees many apply.

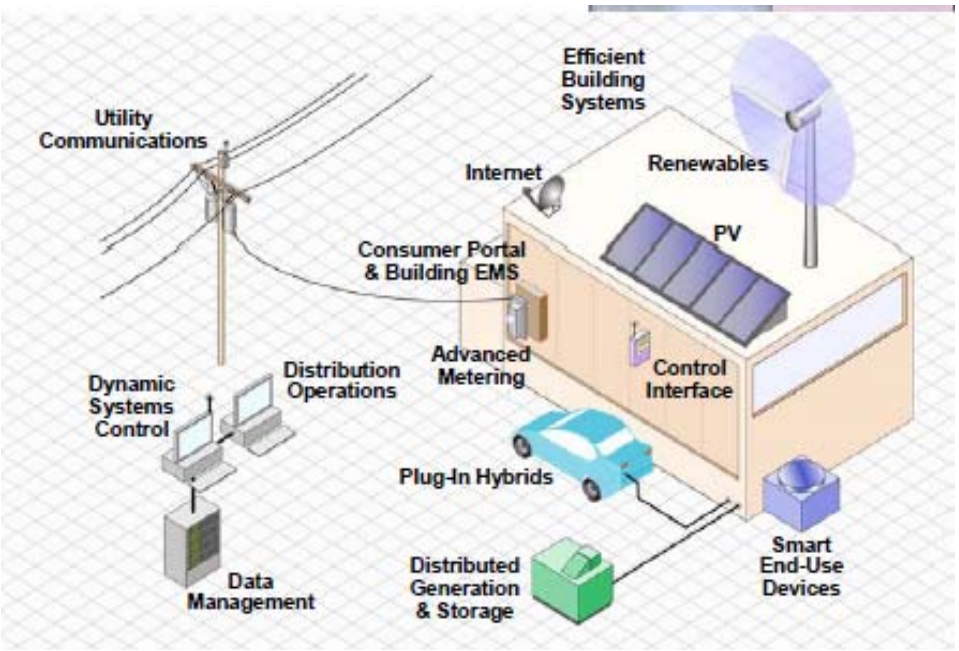

Figure 7-1 Smart Grid Infrastructure[13]

Figure 7-1 incorporates many design features of a Smart Grid/distributed energy storage system. Home use of photovoltaic or wind energy can supplement the utility power. A home area network (HAN) communicating with the Advanced Meter can control lighting, heating, cooling, and other major appliances. Given the right incentives, a home owner may elect to have the utility control total home consumption or delivery power back to the utility through the storage capability of the EV.

There are various mechanisms for utilities to control EV load including;

- **Time-of-Use (TOU)**

  TOU is an incentive based electrical rate that allows the EV owner to save money by charging during a designated "off-peak" time frame established by the utility. Typically, these off-peak times are in the late evenings through early mornings and/or weekends, during a time frame where demand on the utility electrical grid is at its lowest point. TOU is currently being implemented by some utilities but there is not a common approach at this time. Discussion with the local utility prior to installation of the charge station is recommended.

---

[13] Transportation Systems (PEV) in Electric-Successful Integration of Plug, EPRI, Plug-In 2009 Canada, September 2009

- **Dual Metering**

  Some utilities will provide a special rate for EV charging and will require the installation of a second meter specifically for this purpose. This will require additional installation time since the utility must install the meter before the EVSE is available for use. The use of a “revenue grade” meter in the EVSE and a communications path to allow the utility control may obviate the need for the second meter.

- **Demand Response**

  Demand response is a voluntary program that allows a utility to send out a signal to customers (typically large commercial customers) to cut back on loads during times the utility is experiencing a high peak on their utility grid. The customers are compensated when they participate in these programs to make it worth their while. EVs may participate in such programs in the future as deployment of smart meters become more prevalent. Utilities may enter into contracts with EV owners to allow the utility to maintain more control on EV charging.

  - **Real-Time Pricing (RTP)**

  RTP is a concept that could be implemented in the future for electric vehicles whereby pricing signals are sent to a customer through a number of communication mediums that allows the customer to charge their EV during the most cost effective period. For example, the EVSE installed in the EV owners garage could be pre-programmed to make sure the car is fully charged by 6am, at the least cost possible. RTP signals from the utility would allow this to occur without customer intervention. In order to implement RTP smart meters would need to be in place at the charging location and the technology built-in to the EVSE. These programs are under development at the time of this writing.

  - **Vehicle-to-Grid (V2G)**

  V2G is a concept that allows the energy storage in electric vehicles to be used to support the electrical grid during peak electrical loads, in times of emergency such as grid voltage support or based on pricing economics. V2G could also support vehicle-to-home whereby the energy stored in the vehicle battery could supplement the home electrical requirements. V2G requires that the on-board vehicle charger be bi-directional (energy can flow both directions) and that the EVSE at the premise also be bi-directional and accommodating of all the utility requirements related to flowing energy back into the electrical grid. Although there are various development efforts in V2G, this concept for on-road EVs is likely several years away from implementation in any commercial sense.

B. Interconnection Requirements

Although vehicle-to-grid (V2G) connections may be in the future for most applications, some infrastructure will incorporate EVSE with solar parking structures or other renewable resources. Because these systems will connect to the local grid, it will be necessary to contact the local utility to determine if there are any interconnection requirements. These requirements are in place to protect personnel and property while feeding electricity back into the utility grid. Most utility requirements are typically already in place for solar photovoltaic and wind systems that are grid-tied to the utility.

C. Commercial Electrical Supply/Metering

There are typically two scenarios for connection to a commercial electrical supply. The first is utilizing the existing main service entrance section (SES) or an otherwise adequate supply panel at the commercial establishment, and the second is to obtain a new service drop from the local electric utility.

The decision on which approach to take depends on a number of factors including the ability to obtain permission from the property owner and/or tenant of the commercial business, and the location of the existing SES or adequate electrical supply from the proposed electric vehicle charge station site. If permission is granted from the property owner and/or tenant (as required), then a fairly simple analysis can be performed to compare the cost of utilizing an existing supply or a new service drop to determine the best approach.

A new utility service drop will typically require a new customer account be setup, which may include a credit evaluation of the entity applying for the meter, and a monthly meter charge in addition to the energy and demand charges. In addition, the local utility may require an analysis of the anticipated energy consumption in order to justify covering the cost of the new service drop.

8. Cost Estimating

This section provides a cost estimate worksheet and sample costs for residential, commercial fleet and public scenarios. The material and labor costs provided here are for general information purposes only and should not be used for actual planning purposes.

A. Residential Cost Worksheet

Referring to Figure 4-1 for a Residential EVSE installation, Table 8-1 provides a generic Cost Table Worksheet that can be used as a guideline residential installations. As noted in Section 4, some homes may require a service panel upgrade but the following table assumes they do not.

Table 8-1 Cost Worksheet for Residential EVSE Level 2 Installation

Residential Level 2			
Description	**Quantity**	**Cost, Ea**	**Total**
Labor (hrs)			
Initial Site Visit	2	$ 75.00	$ 150.00
Permit Application / Acquisition	2	$ 75.00	$ 150.00
Installation	8	$ 75.00	$ 600.00
Approval	2	$ 75.00	$ 150.00
Labor Sub-Total			$ 1,050.00
Materials			
EVSE - 40Amp	1	$ 780.00	$ 780.00
40amp Breaker	1	$ 35.00	$ 35.00
#12 THHN Wire	140	$ 0.30	$ 42.00
Conduit - 3/4 EMT	35	$ 3.00	$ 105.00
40Amp Fused Disconnect	1	$ 115.00	$ 115.00
Miscellaneous	1	$ 60.00	$ 60.00
Material Sub-Total			$ 1,137.00
Permit	1	$ 85.00	$ 85.00
		Total	**$ 2,272.00**

B. Commercial Fleet Cost Worksheet (10 Stations)

Referring to Figure 4-8 for Commercial Fleet Charging Station, Table 8-2 provides a generic Cost Worksheet for a Commercial Fleet Charging Station with 10 charging locations.

Table 8-2 Cost Worksheet for Commercial Fleet Level 2 Installation (10 Stations)

Commercial Fleet - 10 Stations			
Description	**Quantity**	**Cost, Ea**	**Total**
Labor (hrs)			
Initial Site Visit	2	$ 95.00	$ 190.00
Engineering	16	$ 90.00	$ 1,440.00
Permit Application / Acquisition	2	$ 95.00	$ 190.00
Installation	24	$ 95.00	$ 2,280.00
Approval	2	$ 95.00	$ 190.00
Labor Sub-Total			$ 4,290.00
Materials			
Distribution Panel (400amp)	1	$ 650.00	$ 650.00
EVSE - 40Amp	10	$ 2,500.00	$ 25,000.00
40amp Breaker	10	$ 35.00	$ 350.00
#12 THHN Wire	1000	$ 0.30	$ 300.00
Conduit - 3/4 EMT	250	$ 3.00	$ 750.00
40Amp Fused Disconnect	10	$ 115.00	$ 1,150.00
Signage	10	$ 250.00	$ 2,500.00
Miscellaneous	10	$ 60.00	$ 600.00
Material Sub-Total			$ 31,300.00
Trenching & Repair	200	$ 45.00	$ 9,000.00
Permit	1	$ 85.00	$ 85.00
		Total	**$ 44,675.00**

C. Commercial Publicly Available Cost Worksheet

Referring to Figure 4-10 for a Level 2 Publicly Available Charging Station, Table 8-3 provides a generic Cost Table for a Publicly Available Level 2 Charging Station for two charging locations located side-by-side.

Table 8-3 Cost Worksheet for Level 2 Public Installation (Two Charging Spots)

Publicly Available Charge Station - Level 2 (Qty 2)			
Description	**Quantity**	**Cost, Ea**	**Total**
Labor (hrs)			
Consultation with Property Owner/Tenant	4	$ 95.00	$ 380.00
Initial Site Visit	2	$ 95.00	$ 190.00
Engineering Drawings	16	$ 90.00	$ 1,440.00
Permit Application / Acquisition	2	$ 95.00	$ 190.00
Installation	24	$ 95.00	$ 2,280.00
Approval	2	$ 95.00	$ 190.00
Labor Sub-Total			$ 4,670.00
Materials			
Distribution Sub-Panel (100Amp)	1	$ 250.00	$ 250.00
EVSE - 40Amp	2	$ 2,500.00	$ 5,000.00
40amp Breaker	2	$ 35.00	$ 70.00
#12 THHN Wire	400	$ 0.30	$ 120.00
Conduit - 3/4 EMT	100	$ 3.00	$ 300.00
40Amp Fused Disconnect	2	$ 115.00	$ 230.00
Ground Signage & Striping (painted)	2	$ 125.00	$ 250.00
Signage (Post Mount)	2	$ 250.00	$ 500.00
Miscellaneous	2	$ 60.00	$ 120.00
Material Sub-Total			$ 6,840.00
Trenching & Repair	100	$ 45.00	$ 4,500.00
Permit	1	$ 85.00	$ 85.00
		Total	**$ 16,095.00**

D. Level 3 Charging Cost Worksheet

Figure 8-1 below shows a conceptual a Level 3 Charge Station. Table 8-4 provides a generic Cost Worksheet for Level 3 Charging Installation.

Figure 8-1 Conceptual Fast Charge Station (2 Charge Locations)

Table 8-4 Cost Worksheet for Level 3 Installation (2 Stations)

Publicly Available Charge Station - Level 3 (Qty 2-30kW)			
Description	**Quantity**	**Cost, Ea**	**Total**
Labor (hrs)			
Consultation with Property Owner/Tenant	16	$ 95.00	$ 1,520.00
Initial Site Visit	4	$ 95.00	$ 380.00
Engineering Drawings	24	$ 90.00	$ 2,160.00
Permit Application / Acquisition	4	$ 95.00	$ 380.00
Installation	24	$ 95.00	$ 2,200.00
Approval	4	$ 95.00	$ 380.00
Labor Sub-Total			$ 7,020.00
Materials			
Distribution Sub-Panel (480VAC/3Phase)	1	$ 650.00	$ 650.00
Fast Charger (30kW)	2	$ 25,000.00	$ 50,000.00
Point of Sale System	1	$ 2,500.00	$ 2,500.00
60amp 480VAC/3Pole Breaker	2	$ 45.00	$ 90.00
#6 THHN Wire	160	$ 0.30	$ 48.00
Conduit 1"	50	$ 3.50	$ 175.00
60Amp Fused Disconnect	2	$ 150.00	$ 300.00
Ground Signage & Striping (painted)	2	$ 125.00	$ 250.00
Signage (Post Mount)	1	$ 2,500.00	$ 2,500.00
Miscellaneous	1	$ 350.00	$ 350.00
Material Sub-Total			$ 56,863.00
Trenching & Repair	30	$ 50.00	$ 1,500.00
Concrete Work	1	$ 1,500.00	$ 1,500.00
Permit	1	$ 85.00	$ 85.00
		Total	**$ 66,968.00**

eTec EV Project
EV Charging Infrastructure Deployment Guidelines

MARCH 17, 2010

Electric Transportation Engineering Corporation (eTec)

EV Charging Infrastructure Deployment Guidelines

- Intended to create a common knowledge base of EV requirements for stakeholders involved in the implementation of EV charging infrastructure.
- Provides the necessary background information for understanding EV requirements and the related codes, laws and standards for this effort.
- Provides the foundation upon which the EV Micro-Climate© program is implemented to provide the optimum infrastructure to support and encourage the adoption of electric vehicles in the MAG region.

EV Charging Infrastructure Deployment Guidelines

CONTENTS

1. Electric Vehicle Technology
2. Charging Requirements
3. Charging Scenarios
4. Additional Charging Considerations
5. Codes and Standards
6. Utility Integration
7. Cost Estimating

ATTACHMENT TWO

Survey of Code Adoption

Jurisdiction	Building	Electric	Residential	Fire	Energy	Existing Building Code	Fuel	Notes	URL
Avondale	2006 IBC	2005 NEC	2006 IRC	2003 IFC	2006 IECC	2006 IEBC	2006 IFGC	2006 Fuel Gas Code. Codes adopted 2/20/07, effective 7/1/07	Avondale
Apache Junction	2006 IBC	2005 NEC	2006 IRC	2003 IFC	2006 IECC	2006 IEBC	2006 IFGC	2006 Fuel Gas Code. Codes adopted 2/20/07, effective 7/1/07	
Buckeye	2006 IBC	2005 NEC	2006 IRC	2006 IFC	2006 IECC	2006 IEBC		2006 Fuel Gas Code. Codes adopted 2/20/07, effective 7/1/07	Buckeye
Carefree	2003 IBC	2002 NEC	2003 IRC	2003 IFC		2006 IEBC		Codes became effective July 1, 2006	Carefree
Cave Creek	2003 IBC	2002 NEC	2003 IRC	2003 IFC	2003 IECC	2006 IEBC			Cave Creek
Chandler	2006 IBC	2005 NEC	2006 IRC	2006 IFC	2006 IECC	2006 IEBC	2006 IFGC	Effective September 28, 2008	Chandler
El Mirage	2006 IBC	2005 NEC	2006 IRC	2006 IFC	2006 IECC	2006 IEBC	2006 IFGC	1997 ICC/ANSI Accessibility Code with Arizonans with Disabilities Act. New codes will go into effect Jan. 1, 2008 with city amendments.	El Mirage
Fountain Hills	2006 IBC	2005 NEC	2006 IRC	2006 IFC	2006 IECC	2006 IEBC		Codes adopted April 17, 2008 with town amendments available on Web site.	Fountain Hills
Gila Bend	1997 UBC	1999 NEC	1997 UBC	1997 UFC		2006 IEBC			
Gila River	2006 IBC	2005 NEC	2006 IRC	2003 IFC	None	2006 IEBC			
Gilbert	2006 IBC	2005 NEC	2006 IRC	2006 IFC	2006 IECC	2006 IEBC	2006 IFGC	ADAAG per state requirements	Gilbert
Glendale	2006 IBC	2005 NEC	2006 IRC	2003 IFC		2006 IEBC		With city amendments. Effective Sept. 1, 2007	Glendale
Goodyear	2006 IBC	2005 NEC	2006 IRC	2006 IFC	2006 Residential	2006 IEBC		Adopted 5-14-2007.	Goodyear
Guadalupe	1997 UBC	1999 NEC	1997 UBC	1997 UFC		2006 IEBC			
Litchfield Park	2006 IBC	2005 NEC	2006 IRC	2003 IFC (waiting on Avondale)	2006 IECC	2006 IEBC	2006 IFGC	Codes effective July 1, 2008	Litchfield Park
Maricopa County	2006 IBC	2005 NEC	2006 IRC			2006 IEBC		WITH MAG/AZBO AMENDMENTS adopted September 5, 2007.	Maricopa County
Mesa	2006 IBC	2005 NEC	2006 IRC	2006 IFC		2006 IEBC	2006 IFGC	2006 IBC, IMC, IPC, IRC and 2005 NEC will be effective 2/4/07. Did not adopt the energy code.	Mesa
Paradise Valley	2006 IBC	2005 NEC	2006 IRC	2006 IFC	2006 IECC	2006 IEBC	2006 IFGC	Effective July 1, 2007	Paradise Valley
Peoria	2006 IBC	2005 NEC	2006 IRC	2006 IFC		2006 IEBC	2006 IFGC		Peoria
Phoenix	2006 IBC	2008 NEC	2006 IRC	2006 IFC w/ Amendments	2006 IECC	2006 IEBC	2006 IFGC	Effective July 2, 2008	Phoenix

Last updated February 2010
Source: MAG Building Codes Committee Members
This is intended to be used as a guide, for the selected codes, as to what other agencies have adopted or intend to adopt.

etec Minit Charger

etec An ecotality Company

ATTACHMENT TWO

Survey of Code Adoption

Jurisdiction	Building	Electric	Residential	Fire	Energy	Existing Building Code	Fuel	Notes	URL
Queen Creek	2006 IBC	2005 NEC	2006 IRC	2006 IFC	2006 IECC	2006 IEBC		Effective Aug. 7, 2008	Queen Creek
Salt River	2003 IBC	2002 NEC	2003 IRC	2003 IFC	None	2006 IEBC			
Scottsdale	2006 IBC	2005 NEC	2006 IRC	2006 IFC	2006 IECC	2006 IEBC		Effective Sep. 1, 2007, except IPC June 30, 2008	Scottsdale
Surprise	2006 IBC	2006 IEC w/ 2005 NEC	2006 IRC	2006 IFC	2006 IECC	2006 IEBC	2006 IFGC	Adopted June 28, 2007	Surprise
Tempe	2006 IBC	2008 NEC	2006 IRC	2006 IFC	2006 IECC	2006 IEBC	2006 IFGC	Effective 1/12/2009	Tempe
Tolleson	2006 IBC	2005 NEC w/ 2006 IEC	2006 IRC	2006 IFC	2006 IECC	2006 IEBC		2006 Fuel Gas Code, 2006 IPMC, 2006 NEAC. Codes adopted 2/20/07, effective 7/1/07.	Tolleson
						2006 IEBC			2006 IFC Amend.
Wickenburg	2006 IBC	2005 NEC	2006 IRC	2003 IFC	2006 IECC	2006 IEBC	2006 IFGC		Wickenburg
Youngtown	2006 IBC	2005 NEC	2006 IRC	2006 IFC		2006 IEBC	2006 IFGC		Youngtown

Last updated February 2010
Source: MAG Building Codes Committee Members
This is intended to be used as a guide, for the selected codes, as to what other agencies have adopted or intend to adopt.

etec Minit Charger

etec An ecotality Company

NEXT STEP
EV Micro-Climate Plan & Roadmap
July 2010

- Develop EV Micro-Climates© Plan
  - Project Boundaries
  - Incorporates Local Demographic and Transportation Studies
  - Survey of existing EVSE
  - 10-Year EV Infrastructure Feedback
    - Incorporates Stakeholder Feedback
- Develop EV Micro-Climate© Roadmap (Locations)
  - Publicly Available Charging Station Installation Detailed Plan
    - Commercial & Public
  - Fast Charger Installation Detailed Plan
  - Home Base Charging Station Installation Detailed Plan
    - Residential/Fleet

THANK YOU MAG!!!

1. *Heidi Bickart*
2. *Steve Hether*
3. *Jami Garrison*
4. *Ken Sowers*
5. *MAG Building Codes Committee*