MARICOPA ASSOCIATION of GOVERNMENTS

302 North 1st Avenue, Suite 300 ▲ Phoenix, Arizona 85003
Phone (602) 254-6300 ▲ FAX (602) 254-6490
Email: mag@mag.maricopa.gov ▲ Website: www.mag.maricopa.gov

May 11, 2010

TO: Members of the MAG Building Codes Committee

FROM: Steven Hether, Mesa, Chair

SUBJECT: MEETING NOTIFICATION AND TRANSMITTAL OF TENTATIVE AGENDA

Wednesday **May 19, 2010** - 2:00 pm
MAG Office, Suite 200, Cholla Room
302 North 1st Avenue, Phoenix

A meeting of the MAG Building Codes Committee (BCC) has been scheduled for the time and place noted above. Members of the MAG Building Codes Committee may attend in person, by videoconference or by telephone conference call. Those attending by videoconference or telephone conference call must make arrangements with Steve Gross at MAG and, for videoconferencing, your site coordinator by at least the Monday prior to the meeting.

If you drive to the meeting, please park in the garage under the building and bring your ticket to the meeting; parking will be validated. For those using transit, the Regional Public Transportation Authority will provide transit tickets for your trip. For those using bicycles, please lock your bicycle in the bike rack in the garage.

Pursuant to Title II of the Americans with Disabilities Act (ADA), MAG does not discriminate on the basis of disability in admissions to or participation in its public meetings. Persons with a disability may request a reasonable accommodation, such as a sign language interpreter, by contacting Heidi Bickart at the MAG office. Requests should be made as early as possible to allow time to arrange for accommodation.

Please be advised that under procedures approved by the MAG Regional Council on June 26, 1996, all MAG committees must have a quorum to conduct business. A quorum is a simple majority of the membership, or 13 people for the MAG Building Codes Committee. If you are unable to attend the meeting, please send a proxy from your jurisdiction or agency to represent you.

If you have any questions or require additional information, please contact Jami Garrison at (602) 254-6300 or jgarrison@mag.maricopa.gov.

TENTATIVE AGENDA

1. Call to Order	
2. Introductions	2. For information.
3. March 17, 2010 Meeting Minutes	3. Review and approve the minutes of the March 17, 2010 meeting.
4. Call to the Audience Members of the public may request to speak on items that fall under the jurisdiction of the MAG Building Codes Committee (BCC) and are not scheduled on the agenda; or, on items on the agenda for discussion but not for action. A total of 15 minutes will be provided for the Call to the Audience, with a limit of three minutes per speaker, unless the Chair requests an exception to this limit. Those requesting to comment on action agenda items may be provided an opportunity to do so at the time the agenda item is heard.	4. For information and discussion.
5. Comments From the Committee An opportunity will be provided for Building Codes Committee members to present a brief summary of current events. The Building Codes Committee is not allowed to propose, discuss, deliberate or take action at the meeting on any matter in the summary, unless the specific matter is properly noticed in accordance with the Arizona Open Meeting Law.	5. For information and discussion.
6. Electric Vehicle Charging Infrastructure Deployment Guidelines On August 5, 2009, Electric Transportation Engineering Corporation (eTec), a subsidiary of ECOtality, Inc., a leader in clean electric transportation and storage technologies, was selected by the U.S. Department of Energy for a grant of approximately $99.8 million to implement the largest deployment of electric vehicles and charging infrastructure in history. The eTec initiative proposes to deploy charging infrastructure in major population areas, including Phoenix/Tucson. On March 17, 2010, eTEC presented version 2.0	6. Recommend approval of the Electric Vehicle (EV) Charging Infrastructure Deployment Guidelines document version 3.0 as guidelines to the implementation of infrastructure that will support and encourage the adoption of electric vehicles in the MAG region.

of eTec's Electric Vehicle Infrastructure Deployment Guidelines. The Committee provided feedback and requested that eTEC update the document based on the feedback received. eTec will present version 3.0 of eTec's Electric Vehicle Infrastructure Deployment Guidelines, which incorporates feedback received from members on version 2.0. The document will provide guidelines to the implementation of infrastructure that will support and encourage the adoption of electric vehicles in the MAG region. Please refer to Attachment One.

7. Arizona Building Officials (AZBO) Amendments

Ken Sowers will discuss the status of the 2009 AZBO Amendments and present an estimated timeframe for when the MAG Building Codes Committee can expect to review these amendments.

7. For information and discussion.

8. Updated MAG Building Codes Committee Membership

We are requesting that Committee members review Attachment Two, Committee Roster, sent with this agenda. Please forward any changes to Jami Garrison prior to the meeting or provide them at the meeting.

8. For information and discussion.

10. Update Survey of Code Adoption

Attachment Three identifies the codes that member agencies have adopted. Please review this information and provide any updates or corrections to Jami Garrison.

10. For information and discussion.

11. Topics for Future Agendas

Potential topics for the next meeting will be discussed. The next meeting of the MAG Building Codes Committee is scheduled for Wednesday June 19, 2010 at 2:00 p.m. in the Cholla Room of the MAG offices.

11. For information and discussion.

12. Adjournment

MARICOPA ASSOCIATION of GOVERNMENTS
302 North 1st Avenue, Suite 300 ▲ Phoenix, Arizona 85003
Phone (602) 254-6300 ▲ FAX (602) 254-6490

May 12, 2010

TO: Members of the MAG Building Codes Committee

FROM: Steven Hether, Mesa, Chair

SUBJECT: ADDENDUM TO THE MAY 19, 2010, MAG BUILDING CODES COMMITTEE AGENDA

This is an addendum to the May19, 2010, MAG Building Codes Committee agenda to provide a recommendation for Chair and Vice Chair appointments for the one-year term beginning on July 1, 2010.

Please contact the MAG office if you have questions about the addendum to the agenda.

ITEM TO BE HEARD

9. Recommendation of Chair and Vice Chair of the MAG Building Codes Committee

On July 22, 2009, the MAG Regional Council approved the MAG Committee Operating Policies and Procedures. According to the Policies and Procedures, officer positions for technical committees have one-year terms, with possible reappointment to serve up to one additional term, by consent of the respective committee. In 2009, the Regional Council Executive Committee appointed the officers for the Building Codes Committee to serve terms that would expire on June 30, 2010: Steven Hether, Mesa Deputy Building Safety Director, as Chair, and Ken Sowers, Avondale Chief Building Official, as Vice Chair. Members of the Building Codes Committee are being requested to make one of the following recommendations to the MAG Regional Council Executive Committee: 1) Recommend reappointment of the current chair and vice chair to serve a second one-year term until June 2011; or 2) Recommend that a new chair and vice chair be appointed by the Executive Committee to serve a one-year term until June 2011. Please refer to attachment four.

9. Information, discussion and action regarding the appointment of a chair and vice chair of the MAG Building Codes Committee to serve a one-year term until June 2011.

MINUTES OF THE
MARICOPA ASSOCIATION OF GOVERNMENTS
BUILDING CODES COMMITTEE

March 17, 2010

Maricopa Association of Governments Office
Cholla Room
Phoenix, Arizona

COMMITTEE MEMBERS

*Steven Hether, Mesa, Chair
Ken Sowers, Avondale, Acting Chair
Phil Marcotte, Buckeye
*Mike Tibbett, Carefree
Mike Baxley, Cave Creek
A- Alex Banachowski, Chandler
Mary Dickson, El Mirage
*Peter Johnson, Fountain Hills
*John Smith, Gila Bend
*Jo Rene DeVeau, Gila River Indian Community
A-Ray Patten, Gilbert
Tom Paradise for Bryan Woodcox, Glendale
Bill King for Ed Kulik, Goodyear
*Chuck Ransom, Litchfield Park
Tom Ewers, Maricopa County
Russ Louman for Bob Lee, Paradise Valley
A- Dennis Chase for Dennis Marks, Peoria
Rob Runge for Tom Wandrie, Phoenix
A-Dean Wise, Queen Creek
Michael Clack, Scottsdale
A-Michael Williams, Tempe
Mario Rochin, Tolleson
John Stigsell, Youngtown
Rick DeStefano, Wickenburg
Rus Brock, Home Builders Association

OTHERS IN ATTENDANCE

Heidi Bickart, MAG
Jami Garrison, MAG
Patty Camacho, MAG
Denise McClafferty, MAG
Bridget Jones, HBACA
Marc Sobelman, eTec
Mark Hubbard, eTec
Alana Chavez, ECOtality
Jim Fox, SAFEbuilt
Ken Kirschmann, Southwest Gas
Dustin Schroff, City of Scottsdale

*Those members neither present nor represented by proxy.
A-Those members participating via audioconference
V-Those members participating via videoconference

1. Call to Order

Ken Sowers, Acting Chair, called to order the March 17, 2010 meeting of the MAG Building Codes Committee (BCC) at 2:00 p.m.

2. Introductions

Voting members Dean Wise, Michael Williams, Ray Patten, Dennis Chase, and Alex Banachowski attended via telephone conference call. All members introduced themselves.

3. January 20, 2010 Meeting Minutes

Tom Paradise asked if it is plenum rated not platinum rated. It was moved by Tom Ewers, seconded by Phil Marcotte and unanimously recommended to approve the January 20, 2010 meeting minutes as amended.

4. Call to the Audience

Jim Fox, Operations Manager for Arizona Operation, with SAFEbuilt provided information on services from SAFEbuilt. SAFEbuilt, a Colorado-based inspection agency, is located in 9 different states and currently expanding operations. The company offers plan review services, inspection services, combination of these, any services for special projects (e.g. some communities have expressed interest in using SAFEbuilt as their building inspection service). The company only provides building department services, including fire review and structural review. SAFEbuilt employs 5 Master Code Professionals and 19 Certified Building Officials throughout the company. Jim Fox distributed business cards.

There were no other comments from the audience.

5. Comments From the Committee

Rus Brock introduced Bridget Jones from Home Builders Association of Central Arizona (HBACA). She serves as Deputy Director at HBACA to work with the cities. Ken Sowers welcomed her.

Rick DeStefano asked if any jurisdictions have fencing requirements for ground mounted PV systems. No jurisdictions responded as having this requirement.

6. Electric Vehicle Charging Infrastructure Deployment Guidelines

Ken Sowers introduced Marc Sobelman from eTec. Marc introduced Mark Hubbard also from eTec and Alana Chavez from ECOtality.

On August 5, 2009, Electric Transportation Engineering Corporation (eTec), a subsidiary of ECOtality, Inc., a leader in clean electric transportation and storage technologies, was selected by the U.S. Department of Energy for a grant of approximately $99.8 million to implement the largest deployment of electric vehicles and charging infrastructure in history. The eTec initiative proposes to deploy charging infrastructure in major population areas, including Phoenix/Tucson.

Marc Sobelman of eTec presented eTec's Electric Vehicle Infrastructure Deployment Guidelines. The Deployment Guidelines document is intended to create a common knowledge base of EV requirements for stakeholders involved in the implementation of EV charging infrastructure. eTec's Deployment Guidelines provide the necessary background information for understanding EV requirements and the related codes, laws and standards for this effort. The document will provide the foundation upon which the EV Micro-Climate© program is implemented to provide the optimum infrastructure to support and encourage the adoption of electric vehicles in the MAG region.

Marc Sobleman stated that the Survey of Code Adoption table will be an addendum to the Deployment Guidelines document in version 3.0. He asked the committee members to let him know if any updates needed to be made to the addendum. Copies of the document were distributed.

An overview of the EV Micro-Climate© program was given. Marc Solbeman thanked MAG staff and the member agencies who have been helpful in providing feedback for the Deployment Guidelines. He wrapped up the presentation stating that the reason for the presentation was to get approval of the Deployment Guidelines. He then asked for questions.

Tom Paradise asked if any further thought was given as to when someone buys a vehicle and takes it home, when will they get a charging station?

eTec will get the first 4,700 Nissan Leaf vehicles which will not be available at a dealership. The 900 applicants who are selected to receive vehicles as part of this program, will be notified prior to delivery of the vehicles. They will then have several weeks to get inspections completed on individual residences or commercial establishments prior to installation of the charger and delivery of the vehicle. Once Nissan begins selling to the general public in 2011, eTec will not have control of the timeline.

Marc Sobelman added that as part of the DOE project the Nissan dealerships will have charging stations for owners to use.

Michael Clack asked if things have changed since the initial set up. He gave an overview of the process as he understood it: The contractor would go by and make sure the home of the potential buyer can accommodate the Type II charging station; the electrical contractor would then come in, get a permit and do the work; have the work inspected and then the buyer could pick up their vehicle and bring it home. Marc concurred saying that is how the process is intended. The survey that potential buyers for this program fill out will provide screening information as to whether or not their home qualifies. If, when a contractor gets out there and looks at the home, it does not meet the requirements, then the person will not be qualified for the program.

Alana Chavez of ECOtality explained in more detail. Because of the time constraints on this project, it is anticipated that there will be a lot of simple scenario situations provided on the Nissan questionnaire. The questionnaire is designed to determine those homes with electrical panels that need little or no upgrade. The purpose of the study is to identify some of the more complex issues which will be addressed in the study and ECOtality's response to DOE on the program.

When the consumer is in a dealership purchasing the vehicle, they will be able to simultaneously schedule an inspector, selected from an approved list, to go to their home and perform the inspection. This will cut down on the time it would take to get a level 2 charger installed in the home. All vehicles will come ready for level 1 charging.

Tom Pardise asked if it is a list of city inspectors or eTec inspectors. Marc said it is an eTec certified electrician that will inspect the home. Inspectors will be certifed in the EV program. Mark Hubbard said that there will be a training period for the dealers as well so that they are not selling the cars to someone who does not have a home that can accommodate the charging. Marc Sobelman said that dealers throughout the Phoenix/Tucson area will be armed with information regarding the specs and details so that they can ensure consumers do not purchase a car then later discover it will cost a large sum of money to get the electrical infrastruction in place in their home.

Alana Chavez clarified that after the eTec inspectors check out a home it will trigger a process where the city inspectors are then notified to ensure that there is a seamless flow in the information and process. Marc added that the individual meetings with the cities and towns have the purpose of ensuring a streamlined process that runs smoothly.

Russ Lauman suggested eTec change the term "inspector" to "evaluator" for the eTec list of contractors. Marc Sobelman agreed.

Ken Sowers asked for additional questions and comments. He commented that this is an action item on the agenda. The way he reads it is that a passing vote by the committee would indicate that the committee is in support of the EV system. Heidi Bickart, MAG staff, said that it is important for each member to understand how this project will move forward. She indicated that any questions or concerns should be brought forward by committee members before the document moves forward. This Committee's job is to review and recommend approval of the document. Recommendation of the documenty indicates that the Committee approves of the eTec Deployment Guidelines as the baseline for moving forward with the EV project. Heidi emphasized that if committee members need clarification on anything in the document, now is the time to ask before it gets sent up to the next level which is the Management Committee. The City and Town Managers rely on the members of this Committee to understand the technical details of the document and be in agreement with them.

Tom Paradise, Glendale, asked if the document up for review is the same document as the one presented to Glendale when eTec met with them. Marc Sobelman said yes, that is version 2. Tom asked about version 3.

Marc Sobleman said that version 3 is what will come out of this meeting. So far the changes from the meeting have been small.

Tom said that Glendale had concerns with some one line and installation diagrams in the document and if those are still in the document Glendale could not approve them.

Mark Hubbard said that at the meeting with Glendale, Mike Mosey, eTec's Senior Electrical Supervisor brought up some of this information. Those were documents that are not part of the Guidelines. The Installation Guidelines that will be brought into the Cities in order to pull a permit are not part of the Deployment Guidelines.

Ken Sowers said deployment means this is how you plan on implementing it and where you plan on putting the charging stations but does not say how charging stations will be installed. Mark Hubbard answered that is correct.

Mark Hubbard said that eTec is working on 'simple scenario' documents that will act as a pattern for the cities or MAG suggested standard for installations. eTec is working on these documents with the cities. It is eTec's intent to bring the documents through the MAG committee process.

Ken Sowers asked that it be made clear on what the committee is approving. Marc Sobelman said that so far the only changes to version two will be minor, mostly grammar and spelling updates along with any updates for the Survey of Code Adoption document that is to be used as an addendum.

Tom Paradise asked if approval from MAG is needed for the Deployment Guidelines. Marc Sobelman responded that eTec came to MAG to request approval since MAG is a partner on the EV Project. eTec does not need approval from the MAG BCC to move forward, but since each of the chargers will be going into a city or town in the MAG region, eTec would like to have approval by the cities.

Tom Paradise said that he would like to see the complete version 3 of the document and read it before he approves it. Marc Sobelman indicated that version 3 could be completed as soon as March 30th. There has been little feedback so far indicating only minor changes.

Dennis Chase indicated that Peoria also wants to see the final documents before approving it. On Page 19 there is mention of installing a load control device and not having to upgrade the service. Peoria had some questions and concerns on this section which they discussed at their meeting with eTec. The current document does not address those concerns. Mark Hubbard said that the section should be left out completely. Dennis Chase said that if it indicated that the calculations determined an upgrade in service was needed, then it should be addressed. Marc Sobleman and Mark Hubbard indicated they understood and would revise that section of the Deployment Guidelines document.

Michael Clack said including the Survey of Code Adoption document as an addendum to the document raises a concern on what happens three years from now and this is out of date. He suggested that instead of including it as a document, make reference to it on the MAG web site, which is updated monthly. Ken Sowers said perhaps put a caveat in there about most recent codes.

Mike Williams, City of Tempe, said that they could not allow there to be a conflict between an approved plan and the City code. This document cannot supercede their code. Mike expressed concern over the committee reviewing this document because it appears to give tacit approval for any code violation that may be in this document. That is not what we (as a committee) would intend to send forward to a higher MAG Committee. He said it is incumbent on the Building Codes Committee to say whatever installations are completed need to meet code from whatever jurisdiction where they are installed. Ken Sowers agreed.

Ken stated that his concept was that the BCC was just approving the concept of EV infrastructure. Mike Williams said that it appears to be more of a planning function not a

building safety function. The members of the BCC review technical documents while planning looks at concepts. Marc Sobelman responded that this is not an installation guide. He said that the document states that each EV charging station will be installed within the jurisdiction in accordance with the codes that pertain to that. This is just a common knowledge base document as they go into their 10 year plan or MicroClimates.

Alana Chavez said that this document is not an installation guide, rather it is merely conceptual. It precedes the installation guideline which will come to the BCC for approval and that document will need to meet all code requirements of the respective jurisdictions. Alana agreed with Michael Clack's recommendation to take the Survey of Code Adoption document out as an addendum and just refer to the current version of it from the document. eTec would use it internally as a working document to stay on top of the code adoptions by jurisdiction.

Alana said she didn't know how the group wanted to move forward by suggested that Marc Sobelman make the suggested changes to the current document and they either come back next month or it is approved subject to the changes being made. This would be done with the understanding that the technical document, the Installation Guidelines, will be coming forward to the committee for input and approval in the coming months.

Russ Lauman asked if at some point they will all become one document? Mark Hubbard replied that the Deployment Guidelines and the Installation Guidelines will never be one document. Alana said the Deployment Guidelines is an education document outlining how these EV stations will be deployed on a residential and commercial basis.

Mario Rochin agreed with Mike Williams said it seems as if this is more of a planning stage document for cities, really a planning development document. He said it doesn't seem like something the Committee should get into because this is a technical committee.

Tom Ewers said that the county has had similar situations regarding planning documents or zoning ordinaces referring to a building code, not realizing that the building codes change over time. He said it is more common in planning documents to refer to the more generic term of "shall conform with the current local building code." He sees this as a preliminary step and there isn't another MAG committee that is as appropriate as the BCC to look at issues like this. Tom Ewers stated he would like to see the final document before voting on it.

Marc Sobelman agreed..

Tom Paradise, Glendale, asked why eTec is asking for approval from MAG.

Alana explained the history of the EV project with ECOtality, eTec, Nissan and MAG to bring electric vehicles to the region. She explained that the reason it is important to go through this body and MAG is that MAG is the main stakeholder here in the region. They want to be sure that all MAG member agencies are completely involved in the process as it will directly affect everyone.

Alana then continued on to say that there is no formal planning committee at MAG and the Building Codes Committee was the logical technical committee to get feedback from.

Mike Baxley, Town of Cave Creek, said that as this is being looked on as more of a planning document, for Version 3 it would make sense to remove any technical portions and put those into the Installation Guidelines. Doing so would allow the Committee to review the technical portions at a later date and probably eliminate a lot of the questions coming up right now.

Michael Clack said when eTec came to Scottsdale, one of the planners did attend the meeting. He said that the document was nebulous from her perspective. He said that once the program gets into the building of charging stations that process will be reviewed by planning departments at jurisdictions. Michael said that conceptually he has no problem with the document. He agrees that the technical parts should be removed and that everyone needs to have an opportunity to review the final document.

Marc Sobelman said that the amount of technical data in the document is limited. It is all high level knowledge-base information. The technical information concerns what a level 2 and level 3 charger are but it is not an installation guide but rather a starting point.

Heidi Bickart agreed with Mario rochin and said that in looking at the document from a non-building official perspective, the technical parts in the document are in question. For example, the 2005 NEC is referenced: that is technical and also inaccurate. She suggested taking anything related to building codes out of the document if it doesn't serve a purpose or at least make the references very generic. Heidi also suggested a list of changes from version 2.0 to 3.0 be produced. It can be as simple as using the "track changes" option in Microsoft Word.

Michael Clack suggested using verbiage to replace references to specific codes such as "all applicable codes" in order to keep it generic.

Russ Louman said that if the Committee is going to approve the Deployment Guidelines then the wording of the action item will need to be rewritten to change the part that reads "the foundation upon which the EV Micro-Climate© program is implemented to provide the optimum infrastructure …." He said that he didn't feel that the Committee members could go back to their city and say that they felt this was indeed the "optimum infrastructure." The wording as an overall concept is what the Committee would be approving and the wording should be rewritten to reflect that. Ken Sowers agreed.

Alana Chavez asked how the committee feels about including the Installation Guidelines as an addendum. Would that make it seem a more holistic document from a technical perspective?

Tom Ewers responded that yes it would, but that would just further delay it. He indicated that he didn't think anyone on the Committee is against the Document or that there is a "deal breaker" in the Guidelines. He said that if there is a philosophical program that the BCC recommend to a higher MAG committee to investigate and move forward then the BCC should do that in version 3 at the next meeting. Then later on eTec should come back with the actual Installation Guidelines for the BCC to review separately.

Ken Sowers said they have standard plan submittals for pools, for example, so he sees no reason why we couldn't end up with a standard set up plans for EV charging systems. And then that is what the cities would permit off of.

Rob Runge asked for a clarification on the Installation Guidelines. What is the intent? Will it be generic enough for all cities? Each one will still need to be submitted to each city and comply with their codes and requirements.

Mark Hubbard said that the general intent is to pick the city with the most stringent permit plan process guidelines and develop their process to go with that to start with for the other cities. Hopfully that will make it so that the document will work in just about every municipality they go into within the 5 markets they are working in.

Rob Runge asked if it would still be specific for each house or business. Mark Hubbard responded that is correct.

Ken Sowers asked if there were any additional questions and prepared to move forward with a vote. It was suggested that the matter be tabled until the next meeting. Several committee members agreed.

Marc Sobelman said he could get version 3 completed and distributed to members by next week and then come back for the approval at the April meeting. He expressed appreciation to the committee for their time so far in reviewing the document.

Ken Sowers asked for clarification about whether or not the version 3 would have technical information in it. Marc Sobelman said that he will review the document and get feedback from committee members as to what is considered technical. He will then delete references to all codes other than a general statement. No installation instructions will be in the document. Alana Chavez said that the Installation Guidelines will come to the committee the following month, after the Deployment Guidelines are approved.

Mike Baxley asked if it would be appropriate to send the Installation Guidelines to the Bulding Inspectors/Plans Examiners forum for review. Ken Sowers agreed.

Ken Sowers said that there is a Building Inspectors/Plans Examiners group that could look over the Installation Guidelines and he indicated that he would get information to Marc Sobelman on how to make a presentation to them.

Ken Sowers said that the Deployment Guidelines are on hold until the committee sees version 3. The motion for approval will be restated to reflect approval of the concept of the document. It is expected that version 3 will be reviewed and listed as an action item at the next BCC meeting.

13. Legislative Update

Patty Camacho gave a legislative update and distributed a list of MAG related bills around the table. The list represents House and Senate activity since February 1st. She explained bills that impact MAG BCC, such as the solar energy permit issues. HB 2701, Electrical Utilities Renewable Energy Standards, is a dead bill. HB 2285, City Building Permit Fee, is a hot issue which basically states that the fee has to be adequate with the level of service. As of March 8th that bill has been approved at the Committee of the Whole at the House. It was approved with a small minor amendment. Patty Camacho stated that right now the number one priority at the House and Senate is the State Budget so there has been no further action.

Patty asked for feedback from the Committee members if anyone has any bills they would like more information on and she would follow up. There were no additional bills brought up.

This item was taken out of order.

7. Arizona Building Officials (AZBO) Amendments

Ken Sowers discussed the status of the 2009 AZBO Amendments. They should be in the hands of the AZBO Board now, and no comments have been received to date. Ken stated that he distributed the amendments for MAG BCC review and asked that members provide any comments at the next meeting. He said that the intent is to make members aware of what the Code Development Committee came up with on the amendments.

Tom Ewers said they are almost the same as the amendments adopted 3 years ago. Ken Sowers agreed stating that residential care or assisted living facitilies is getting some attention. Ken said that the committee on this has been working hand in hand with the State to make sure the building code and State fall in line with each other. Other than that it is mostly the same.

Ken Sowers urged the members to take some time to review these amendments and the Commitee will discuss any comments at the next meeting. For some municipalities that will be adopting the 2009 AZBO Amendments having information from MAG would be more beneficial.

8. MAG Building Inspectors/Plans Examiners (BI/PE) Forum Update

Dustin Schroff, Senior Plans Examiner from the City of Scottsdale, is the new Chair of BI/PE. Ken Sowers welcomed Dustin.

Dustin said that he has distributed emails about codes and questions. He has been working on updating the approved truss manufacturers table. He looks forward to working with all of the members. They are planning to have a meeting in May.

9. Updated MAG Building Codes Committee Membership

No updates were provided. Members were encouraged to send any changes to Heidi Pahl-Bickart.

10. Update on Survey of Code Adoption Document

Maricopa County said they had one change in the last column and provided that to Heid Bickart. Heidi requested that any changes that members have and may have provided to eTec during meetings with them be provided to Heidi so that the document could be properly updated.

11. Topics for Future Agendas

Ken Sowers said that eTec will be back with the updated Deployment Guidelines for the next meeting. The AZBO Amendments will also be left on the agenda for the next meeting as an item of discussion.

Ken Sowers stated that the AZBO Institute week will be during the same week as the scheduled April meeting. It was unanimously agreed to not hold the April meeting due to the AZBO Institute conflict.

Rus Brock announced that he is leaving HBACA at the end of April. He will be retiring. Rus stated that it has been a pleasure to work with the committee. Bridget Jones will be the new HBACA representative. Ken Sowers acknowledged Rus' contribution to the MAG BCC and wished him well on behalf of the Committee.

12. Adjournment

The meeting adjourned at 3:30 pm.

Electric Vehicle Charging Infrastructure Deployment Guidelines For The Greater Phoenix Area

April, 2010
Version 3.0

ELECTRIC TRANSPORTATION ENGINEERING CORPORATION

Disclaimers

This document was prepared for establishing the foundation for the initial deployment of EVSE by Electric Transportation Engineering Corporation. Electric Transportation Engineering Corporation, nor any of their affiliates:

> (a) represents, guarantees or warrants to any third party, either expressly or by implication: (i) the accuracy, completeness or usefulness of; (ii) the intellectual or other property rights of any person or party in; or (iii) the merchantability, safety or fitness for purpose of; any information, product or process disclosed, described or recommended in this document,
> (b) assumes any liability of any kind arising in any way out of the use by a third party of any information, product or process disclosed, described or recommended in this document, or any liability arising out of reliance by a third party upon any information, statements or recommendations contained in this document.

Should third parties use or rely on any information, product or process disclosed, described or recommended in this document, they do so entirely at their own risk.

This report was prepared as an account of work sponsored by an agency of the United States Government. Neither the United States Government nor any agency thereof, nor any of their employees, makes any warranty, express or implied, or assumes any legal liability or responsibility for the accuracy, completeness, or usefulness of any information, apparatus, product, or process disclosed, or represents that its use would not infringe privately owned rights. Reference herein to any specific commercial product, process, or service by trade name, trademark, manufacturer, or otherwise does not necessarily constitute or imply its endorsement, recommendation, or favoring by the United States Government or any agency thereof. The views and opinions of authors expressed herein do not necessarily state or reflect those of the United States Government or any agency thereof.

This material is based upon work supported by the
Department of Energy under Award Number DE-EE0002194.

© 2010 Electric Transportation Engineering Corporation
All rights reserved

ETEC Document #021213.0 April 2010

Acknowledgements

ECOtality/eTec would like to thank the following organizations for their participation and contribution to these Deployment Guidelines:

ECOtality/eTec would also like to acknowledge Maricopa County, Town of Paradise Valley, City of Apache Junction, Town of Buckeye, Town of Carefree, Town of Gila Bend, Gila Bend IC, Town of Queen Creek, City of Litchfield Park, City of Surprise, City of Tolleson and Town of Youngtown for their assistance on the Deployment Guidelines.

Table of Contents

1. Introduction 1
2. Electric Vehicle Technology 2
A. Electric Vehicle Configurations 2
B. Electric Vehicle Categories 4
C. Batteries 4
D. Automaker Plans 6
3. Charging Requirements 7
A. Charging Components 7
B. Charging Levels 9
C.. Level 1 versus Level 2 Considerations 12
D. General Requirements 12
4. Charging Scenarios 15
A. Single Attached/Detached Garages 15
B. Car Port 20
C. Multi-Family Dwellings 21
D. Commercial Fleets 23
E. Publicly Available Charging Stations 25
5. Additional Charging Considerations 33
A. Signage 33
B. Lighting and Shelter 34
C. Accessibility Recommendations 35
D. Safety Issues related to Indoor Charging 36
E. Installations Located in Flood Zones 36
F. Point of Sale Options 37
G. Data Collection 39
H. Vandalism 39
I. Station Ownership 40
J. Maintenance 40
6. Codes and Standards 41
A. Regulatory Agencies 41
B. National Electric Code 41
C. SAE and UL 42
D. Occupational Safety and Health 43
E. Engineering, Permitting & Construction 43
7. Utility Integration 44
A. Background 44
B. Interconnection Requirements 47
C. Commercial Electrical Supply/Metering 47

Figures

Figure 2-1 Battery Electric Vehicle 2
Figure 2-2 Series Plug-In Hybrid Vehicle Block Diagram 3
Figure 2-3 Parallel Plug-In Hybrid Vehicle Block Diagram 3
Figure 2-4 Automaker PHEV and BEV Plans 6
Figure 3-1 Level 2 Charging Diagram 7
Figure 3-2 J1772 Connector and Inlet (Preliminary) 8
Figure 3-3 Level 1 Charging Diagram 9
Figure 3-4 Level 1 Cord Set 10
Figure 3-5 Level 2 Charging 11
Figure 3-6 DC Fast Charging Charging (DC Charging) 11
Figure 3-7 Chrysler EPIC DC Fast Charging Charging (90kW) circa 1997 12
Figure 3-8 Wheel Stop 13
Figure 3-9 Garage Wheel Stop 13
Figure 4-1 Double Garage Location for EVSE 16
Figure 4-2 Typical Single Garage Location for EVSE 17
Figure 4-3 Typical Level 1 and Level 2 Installations for a Residential Garage 18
Figure 4-4 Installation Process for a Residential Garage/Car Port 19
Figure 4-5 Installation Considerations for Outdoor Parking 20
Figure 4-6 Typical EVSE Installation in Multi-Family Lot 21
Figure 4-7 Installation Process for Multi-Family 22
Figure 4-8 Level 2 Commercial EV Charging Location 24
Figure 4-9 Installation Process for Commercial Fleet Operations 25
Figure 4-10 Example Publicly Available Charging Layout 28
Figure 4-11 Publicly Available Charging Examples 28
Figure 4-12 Example Shopping Mall EVSE Parking 30
Figure 4-13 Indoor Charging 30
Figure 4-14 Outdoor Charging 30
Figure 4-15 Installation Flowchart for Public Charging 31
Figure 4-16 Curbside Charging 32
Figure 5-1 No Parking Except for Electric Vehicles Sign 33
Figure 5-2 Wayfinding Sign 33
Figure 5-3 Public Charging with Shelter and Lighting 34
Figure 5-4 Parking Accessibility Requirements 36
Figure 5-5 Smartcard Reader 38
Figure 5-6 RFID Fob 39
Figure 5-7 RFID Reader and Communications Terminal 39
Figure 7-1 Smart Grid Infrastructure 45

Tables

Table 2-1 EV Charge Times 5
Table 5-1 Accessible Charging Station Recommendations 35

Acronyms

BEV Battery Electric Vehicle - vehicles powered 100% by the battery energy storage system available on-board the vehicle.

CCID Charge Current Interrupting Device

EV Electric Vehicle

EREV Extended Range Electric Vehicle – see PHEV.

EVSE Electric Vehicle Supply Equipment – equipment that provides for the transfer of energy between the electric utility power and the electric vehicle.

ICE Internal Combustion Engine

kW Kilowatts - A measurement of electric power. Used to denote the power an electrical circuit can deliver to a battery.

kWh Kilowatt Hours - A measurement of total electrical energy used over time. Used to denote the capacity of an EV battery.

NEC National Electric Code - part of the National Fire Code series established by the National Fire Protection Association (NFPA) as NFPA 70. The NEC codifies the requirements for safe electrical installations into a single, standardized source.

NEMA National Electrical Manufacturers Association - Develops standards for electrical products.

PHEV Plug-in Hybrid Electric Vehicle – vehicles utilizing a battery and an internal combustion engine (ICE) powered by either gasoline or diesel.

REEV Range Extended Electric Vehicle – see PHEV.

RTP Real Time Pricing – a concept for future use whereby utility pricing is provided to assist a customer in selecting the lowest cost charge.

SAE Society of Automotive Engineers - standards development organization for the engineering of powered vehicles.

TOU Time of Use - an incentive based electrical rate established by an electric utility.

V2G Vehicle to Grid - a concept that allows the energy storage in electric vehicles to be used to support the electrical grid during peak electrical loads.

VAC Voltage Alternating Current

Electric Vehicle Charging Infrastructure Deployment Guidelines

1. Introduction

Concerns with global warming, oil shortages and increasing gas prices, along with the rapid rise of more fuel efficient vehicles, are clear indicators of changing consumer preferences and industry direction. As major automotive manufacturers plan to launch plug-in electric vehicles (EV) in 2010, the future of transportation is being propelled by a fundamental shift to cleaner and more efficient electric drive systems.

Electric Transportation Engineering Corporation (eTec), a subsidiary of ECOtality, has been involved in every North American EV initiative since 1989. With over two decades of experience in electric transportation, eTec is the most experienced and qualified solution provider for EVs and supporting infrastructure. eTec's unparalleled EV infrastructure experience, combined with its expertise in batteries, battery charging, utility activities and electric drive systems makes eTec a leader in electric transportation.

ECOtality and eTec developed EV Micro-Climate© as an integrated turn-key program to ensure an area is well equipped with the needed infrastructure to support the consumer adoption of electric transportation. Beginning with extensive feasibility and infrastructure planning studies, the program provides a blueprint to create a rich EV infrastructure. The program is developed with all relevant stakeholders including governmental organizations, utilities, private-sector businesses and automotive manufacturers.

These Deployment Guidelines are not intended to be used as an installation manual or a replacement for approved codes and standards but rather are intended to create a common knowledge base of EV requirements for stakeholders involved in the development and approval of EV charging infrastructure.

Electric Vehicles have unique requirements that differ from internal combustion engine vehicles and many stakeholders are currently not familiar with these requirements. eTec's Electric Vehicle Infrastructure Deployment Guidelines provide the necessary background information for understanding EV requirements and is the foundation upon which the EV Micro-Climate© program builds in order to provide the optimum infrastructure to support and encourage the adoption of electric vehicles wherever it is directed.

2. Electric Vehicle Technology

This section describes the basic electric vehicle technologies that are either available in the marketplace or coming to market in the near future. The focus of this section is on vehicles licensed for the road that incorporate a battery energy storage device with the ability to connect to the electrical grid for the supply of some or all of its fuel energy requirements. Two main vehicle configurations are described along with the four main categories of vehicle applications. Vehicle categories and the relative size of their battery packs are discussed in relationship recommended charging infrastructure.

A. Electric Vehicle Configurations

- **Battery Electric Vehicle (BEV)**

Battery Electric Vehicles (BEVs) are powered 100% by the battery energy storage system available on-board the vehicle. The Nissan LEAF is an example of a BEV. Refueling the BEV is accomplished by connection to the electrical grid through a connector system that is design specifically for this purpose. Most advanced BEVs have the ability to recapture some of the energy storage utilized through regenerative braking (In simple terms, converting the propulsion motor into a generator when braking). When regenerative braking is applied, BEVs can typically recover 5 to 15 percent of the energy used to propel the vehicle to the vehicle speed prior to braking. (Sometimes manufacturers install solar photovoltaic (PV) panels on vehicle roofs. This typically provides a very small amount of energy relative to the requirements of propelling the vehicle, but integrating PV in the roof can typically provide enough power to operate some small accessory loads.)

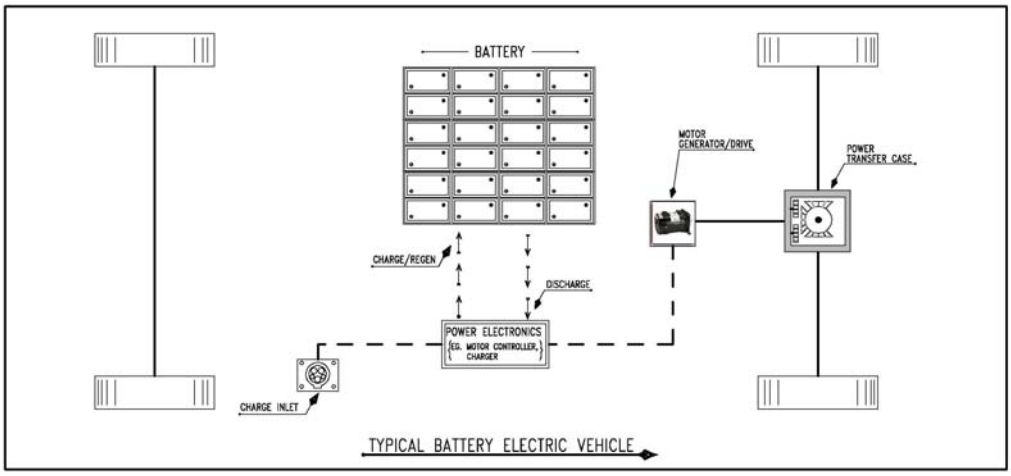

Figure 2-1 Battery Electric Vehicle

A typical BEV can be depicted by the block diagram shown in Figure 2-1. Since the BEV has no other significant energy source, the battery must be selected to meet the BEV range and power requirements. BEV batteries are typically an order of magnitude larger than the batteries in hybrid electric vehicles.

- **Plug-in Hybrid Electric Vehicle (PHEV)**

PHEVs are powered by two energy sources. The typical PHEV configuration utilizes a battery and an internal combustion engine (ICE) powered by either gasoline or diesel. Within the PHEV family, there are two main design configurations, a Series Hybrid as depicted in Figure 2-2 and a Parallel Hybrid as depicted in Figure 2-3. The Series Hybrid vehicle is propelled solely by the electric drive system, whereas the Parallel Hybrid vehicle is propelled by both the ICE and the electric drive system. As with a BEV, a Series Hybrid will typically require a larger and more powerful battery than a Parallel Hybrid vehicle in order to meet the performance requirements of the vehicle solely based on battery power.

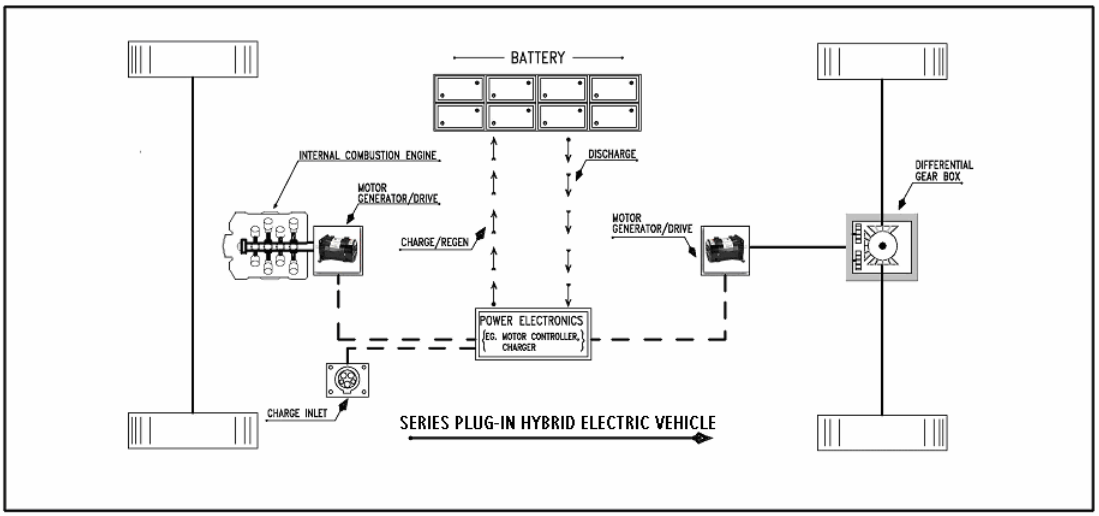

Figure 2-2 Series Plug-In Hybrid Vehicle Block Diagram

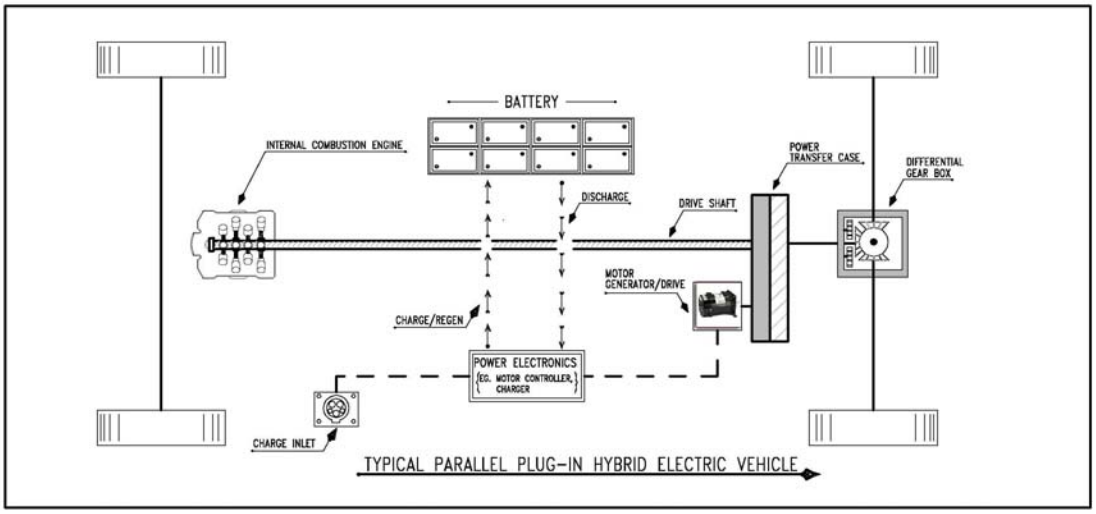

Figure 2-3 Parallel Plug-In Hybrid Vehicle Block Diagram

Manufacturers of PHEVs use different strategies in combining the battery and ICE and may utilize the battery only for the first several miles, such as the Chevy Volt, with the ICE providing generating power for the duration of the vehicle range. Others may use the battery power for sustaining motion and

the ICE for acceleration or higher energy demands at highway speeds. Frequently, the vehicles employing the former strategy gain a designation such as PHEV-20 to indicate that the first 20 miles are battery only. Other terms related to PHEVs may include Range Extended Electric Vehicle (REEV) or Extended Range Electric Vehicle (EREV).

B. Electric Vehicle Categories

EVs can be broken down into the following categories:

- **On-Road Highway Speed Vehicles**

On-Road Highway Speed Vehicle is an EV capable of driving on all public roads and highways. Performance of these On-Road vehicles is similar to Internal Combustion Engine vehicles.

- **City Electric Vehicles**

Traditionally, City Vehicles have been BEVs that are capable of driving on most public roads, but generally are not driven on highways. Top speed is typically limited to 55 mph.

- **Neighborhood Electric Vehicles (NEVs)**

Neighborhood electric vehicles (NEVs) also known as Low Speed Vehicles (LSVs) are BEVs that are limited to 25 mph and are allowed in certain jurisdictions to operate on public streets posted at 35 mph or less.

- **Commercial On-Road Highway Speed Vehicles**

There are a number of commercial electric vehicles including commercial trucks and buses. These vehicles are found as both BEVs and PHEVs. Performance and capabilities of these vehicles are specific to their application.

The focus of the EV Micro-Climate© program is on the first and last bulleted items above. Specialty vehicles such as electric motorcycles and bicycles require a different planning process.

C. Batteries

- **Battery Technology**

Recent advancements in battery technologies will allow EVs to compete with ICE vehicles in performance, convenience and cost. Although lead-acid technology serves many EV applications like forklifts and airport ground support equipment very cost-effectively, the limitations on energy density and repeated cycles of charging and discharging make its application to on-road highway speed EVs less practical.

Today, most major car companies utilize Nickel-Metal-Hydride or various Lithium based technologies for their EVs. Lithium provides 4x the energy of lead-acid and 2x that of Nickel-Metal-Hydride. The materials for Lithium based batteries are generally considered abundant, non-hazardous and lower cost than Nickel based technologies. The current challenge with lithium-

based technologies is increasing battery capacity while maintaining quality, cycle life and lowering production costs.

From an infrastructure standpoint, it is important to consider that, as battery costs are driven down over time, the auto companies will increase the size of the lithium-based battery packs and thus the range of electric vehicles.

- **Relative Battery Capacity**

Battery size or capacity is measured in kilowatt hours (kWh). Battery capacity for electric vehicles will range from as little as 3 kWh to as large as 40 kWh or more. Typically, PHEVs will have smaller battery packs because they have more than one fuel source. BEVs rely completely on the storage from their battery pack for both range and acceleration and therefore require a much larger battery pack than a PHEV for the same size vehicle.

- **Battery Charging Time**

The amount of time to fully charge an EV battery is a function of the battery size and the amount of electric power or kilowatts (kW) that an electrical circuit can deliver to the battery. Larger circuits, as measured by voltage and amperage, will deliver larger amounts of kW. The common 110-120 volts AC (VAC), 15 amp circuit will deliver at minimum 1.1 kW to a battery. A 220-240 VAC, 40 amp circuit (similar to the circuit used for household appliances like dryers and ovens) will deliver at minimum 6 kW to a battery. Table 2-1 provides information on several different on-road highway speed electric vehicles, their battery pack size, and charge times at different power levels to replenish a depleted battery.

Table 2-1 EV Charge Times

		Circuit Size and Power in kW Delivered to Battery			
EV Configuration	**Battery Size (kWh)**	110 VAC, 15 amp **1.1 kW**	110 VAC, 20 amp **1.5 kW**	220 VAC, 40 amp **6 kW**	440 VAC, 85 amp **55 kW**
PHEV-10	**4**	3 h 50 m	2 h 40 m	40 m	n/a
PHEV-20	**8**	7 h 20 m	5 h 20 m	1 h 20 m	n/a
PHEV-40	**16**	14 h 30 m	10 h 40 m	2 h 40 m	17 m
BEV	**24**	21 h 48 m	16 h 00 m	4 h 00 m	26 m
BEV	**35**	31 h 50 m	23 h 20 m	5 h 50 m	38 m
PHEV Bus	**50**	n/a	n/a	8 h 20 m	55 m

Note: Power delivered to battery calculated as follows: 110VAC x 12 Amps x.85 eff.; 110VAC x 16 Amps x .85 eff.; 220VAC x 32 Amps x.85 eff.; 480VAC x √3 x 85 Amps x .85 eff.

D. Automaker Plans

Many automakers have announced plans for the introduction of on-road highway speed EVs in the near future. A summary table of such plans is shown in Figure 2-4 below.

Plug-In Hybrid Electric Vehicles

Company	Model	Price	Battery Type	Battery Size	EV Range (miles)	PHEV Type	Market launch	Production Capacity
BYD	F3DM	$21,915	Lithium-ion	-	62	-	2008	
BYD	F6DM	~$22,000	Lithium-ion	-	62	-	2008	
Fisker	Karma	$87,900	Lithium-ion	22 KWh	50	Series	2010	15k
Ford	Escape PHEV	-	Lithium-ion	10 KWh	30-40	-	2012	
GM	Chevrolet Volt	~$40,000+	Lithium-ion	16 KWh	40	Series	2010	60k by 2012
Opel	Ampera	-	Lithium-ion	16 KWh	40	Series	2012	
Toyota	Prius	~$48,000	Lithium-ion	-	12-18	Parallel	2010	20k-30k
Volkswagen	Golf Twin Drive	-	Lithium-ion	12 KWh	30	-	2010	20 car pilot

Electric Vehicles

Company	Model	Price	Battery Type	Battery Size	EV Range (miles)	Latest Model	Market launch	Production Capacity
BMW	Mini E	-	Lithium-ion	35 KWh	~100+	2009	n.d.	500 pilot
BYD	E6 EV	-	Lithium-ion	18 KWh	249	2009	2009	
Chery Auto.	S18 EV	~$15,000	Lithium-ion	13 KWh	93	2009	2009	
Chrysler	Dodge circuit	-	Lithium-ion	26 KWh	150-200	2010	2010	
Coda	EV Sedan	$45,000	Lithium-ion	34 KWh	90-120	2010	2010	
Ford	Focus EV	-	Lithium-ion	-	100	2011	2011	
Mitsubishi	iMiEV	~$46,000	Lithium-ion	16 KWh	100	2009	2009	20,000
Nissan	EV LEAF	~$24k to ~$34k*	Lithium-ion	24 KWh	100	2010	2010	150,000+
Renault	Fluence ZE (Better Place)	-	Lithium-ion	-	100	2011	2011	100,000
Smart	EV	-	Lithium-ion	-	70	2010	2010	
Subaru	Stella	$47,900	Lithium-ion	9 KWh	55	2009	2009	~170 in 2009
Tesla	Model S	$57,400	Lithium-ion	-	160-300	2011	2011	
Tesla	Roadster EV	$109,000	Lithium-ion	53 KWh	244	2009	2009	
Th!nk	City	$28,000	Sodium or Li	-	110	2010	2010	2,500 (US)

Source: Company data, Credit Suisse estimates

Figure 2-4 Automaker PHEV and BEV Plans[1]

[1] Credit Suisse "Electric Vehicles", Equity Research, Energy Technology/Auto Parts & Equipment, October 1, 2009

3. Charging Requirements

This section covers the terminology and general requirements of Electric Vehicle Supply Equipment (EVSE). EVSE provides for the safe transfer of energy between the electric utility power and the electric vehicle.

E. Charging Components

The terms used to identify the components in the delivery of power to the vehicle are defined first.

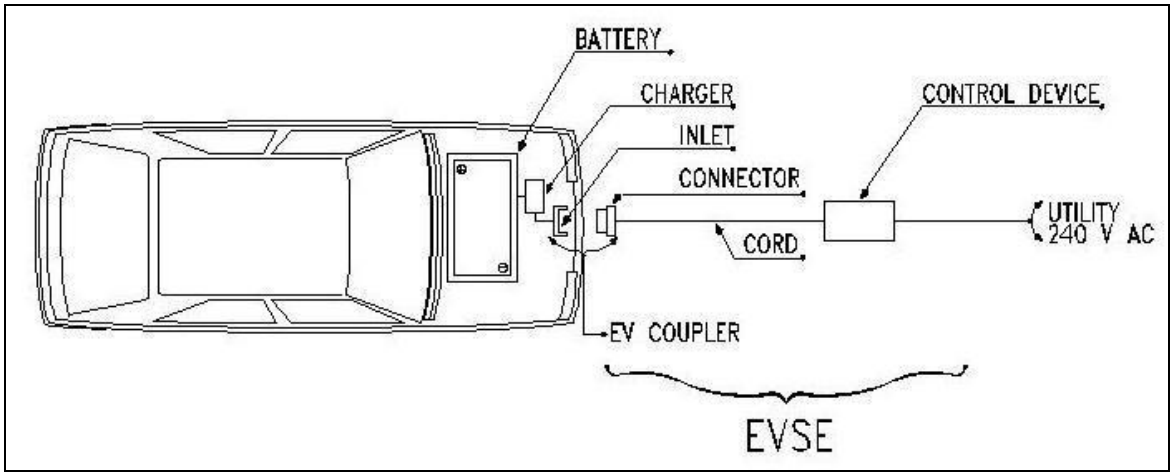

Figure 3-1 Level 2 Charging Diagram

Power is delivered to the EV's onboard battery through the EV inlet to the charger. The charger converts Alternating Current (AC) to Direct Current (DC) required to charge the battery. The charger and EV inlet are considered part of the EV. A connector is a device that, by insertion into an EV inlet, establishes an electrical connection to the electric vehicle for the purpose of charging and information exchange. The EV inlet and connector together are referred to as the coupler. The EVSE consists of the connector, cord and interface to utility power. The interface between the EVSE and utility power will be directly "hard-wired" to a control device as illustrated in Figure 3-1 or a plug and receptacle as illustrated in Figure 3-3.

In the 1990's there was no consensus on EV inlet and connector design. Both conductive and inductive types of couplers were designed and in both cases, different designs of each type were provided by automakers. At the present time, however, the Society of Automotive Engineers (SAE) has agreed that all vehicles produced by automakers in the United States will conform to a single design called the J1772 Standard.[2]

While the J1772 Standard will be utilized by all automakers in the United States, it is not necessarily the standard to be used in other countries. It is the subject of a harmonization project with the Canadian Codes. A common connector is also the goal of European, Asian and North American designers.

J1772 Connector **J1772 Inlet (right side)**

Figure 3-2 J1772 Connector and Inlet (Preliminary)

The J1772 Standard EV coupler is designed for 10,000 connections and disconnections with exposure to dust, salt and water; is able to withstand a vehicle driving over it and is corrosion resistant.

The J1772 Standard and National Electrical Code requirements create multiple safety layers for EV components including:

- The EV coupler -
  - must be engineered to prevent inadvertent disconnection.
  - must have a grounded pole that is first to make contact and the last to break contact.
  - must contain an interlock device which prevents vehicle startup while connected.
  - must be unique to electric vehicle charging and cannot be used for other purposes.
- The EV inlet -
  - must be de-energized until it is attached to the EVSE.
  - must de-energize prior to removal of the connector.
- The EVSE -
  - must be tested and approved for use by Underwriters Laboratory (UL), or a similar nationally recognized, independent testing lab.
  - must be able to initiate area ventilation for those specific batteries that may emit potentially explosive gases.
  - must have a charge current interrupting device (CCID) which will shut off the electricity supply if it senses a potential problem that could result in electrical shock to the user.

In addition, when connected, the vehicle charger will communicate with the EVSE to identify the circuit rating (voltage and amperage) and adjust the charge to the battery accordingly. Thus an EVSE that is capable of delivering 20 amps will deliver that current even though connected to a 40 amp rated circuit.

The J1772 coupler and EV inlet will be used for both Level 1 and 2 charging levels, which are described below.

F. Charging Levels

In 1991 the Infrastructure Working Council (IWC) was formed by the Electric Power Research Institute (EPRI) to establish consensus on several aspects of EV charging. Level 1, Level 2 and DC Fast Charging levels were defined by the IWC along with the corresponding functionality requirements and safety systems. EPRI published a document in 1994 that describes the consensus items of the IWC[3].

Note: For Level 1 and 2, the conversion of the utility AC power to the DC power required for battery charging occurs in the vehicle's on-board charger. In DC Fast Charging, the conversion from AC to DC power typically occurs off-board so that DC power is delivered directly to the vehicle.[4]

- **Level 1 – 120 volt AC**

  The Level 1 method uses a standard 120 volts AC (VAC) branch circuit that is the lowest common voltage level found in both residential and commercial buildings. Typical voltage ratings can be from 110 – 120 volts AC. Typical amp ratings for these receptacles are 15 or 20 amps.

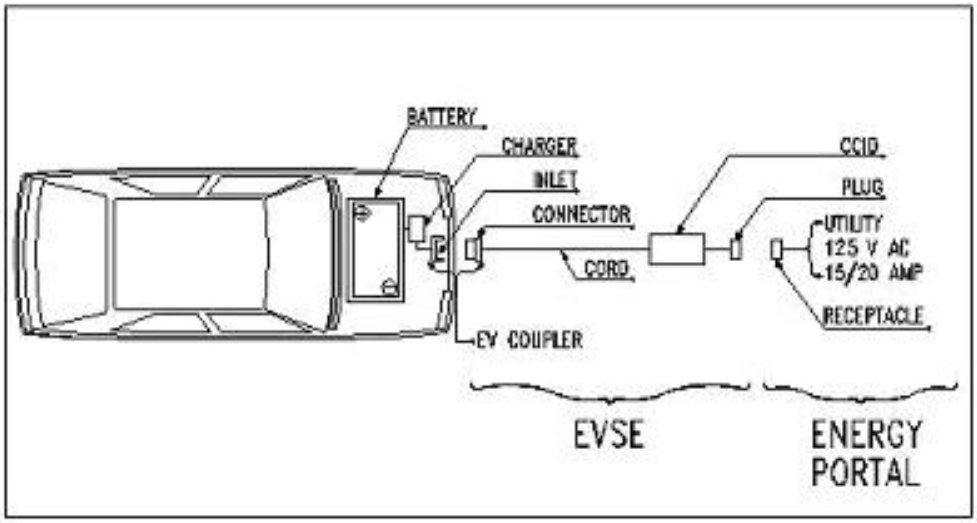

Figure 3-3 Level 1 Charging Diagram

[3] "Electric Vehicle Charging Systems: Volume 2" Report of the Connector and Connecting Station Committee, EPRI, December 1994.
[4] AC DC Fast Charging (delivering high-power AC directly to the vehicle) is defined within the SAE J1772 document, but this approach has not been implemented as yet.

Figure 3-4 Level 1 Cord Set[5]

Level 1 charging typically uses a standard 3 prong electrical outlet (NEMA 5-15R/20R) to connect to premise wiring.

Future EV suppliers will likely provide a Level 1 Cord Set (125 VAC, 15 or 20 amps) with the vehicle. The Cord Set will use a standard 3-prong plug (NEMA 5-15P/20P) with a charge current interrupting device (CCID) located in the power supply cable within 12 inches of the plug. The vehicle connector at the other end of the cord will be the design identified in J1772 Standard. This connector will properly mate with the vehicle inlet also approved by J1772.

Because charge times can be very long at Level 1 (see Table 2-1), many EV owners will be more interested in Level 2 charging at home and in publicly available locations. Some EV manufacturers suggest their Level 1 Cord Set should be used only during unusual circumstances when Level 2 EVSE is not available, such as when parked overnight at a non-owner's home.

Several companies provide kits to convert internal combustion and hybrid vehicles to plug-in vehicles. Many of these conversions use a standard 3 prong electrical plug and outlet to provide Level 1 charging of their vehicles. With the standardization of EVs on the J1772 Standard and the higher level of safety afforded by a J1772 compliant charging station, existing vehicles will need to be retrofitted to accommodate a J1772 inlet in order to take advantage of the deployment of EVSE infrastructure.

- **Level 2 – 240 volt AC**

Level 2 is typically described as the "primary" and "preferred" method for the EVSE both for private and publicly available facilities and specifies a single phase branch circuit with typical voltage ratings from 220 – 240 volts AC. The J1772 approved connector allows for current as high as 80 amps AC (100 amp rated circuit). However, current levels that high are rare and a more typical rating would be 40 amps AC which allows a maximum current of 32 amps. This provides approximately 7.7 kW with a 240 VAC circuit.

---

[5] Conceptual Design for Chevy Volt, *Electrifying the Nation, PHEV Summit*, Tony Posawatz, January 2009

The higher voltage of Level 2 allows for a much faster battery charge. Because of the higher voltage, Level 2 has a higher level of safety requirements than Level 1 under the National Electric Code including the requirement that the connector and cord be hardwired to the control device and premise wiring as illustrated in Figures 3-1 and 3-5.

Figure 3-5 Level 2 Charging

.

- **Level 3 Charging (DC Fast Charging)**

Level 3 Charging, or more correctly "DC Fast Charging" is for commercial and public applications and is intended to perform in a manner similar to a commercial gasoline service station in that recharge is rapid. Typically, DC Fast Charging would provide a 50% recharge in 10 to 15 minutes. DC Fast Charging typically uses an off-board charger to provide the AC to DC conversion. The vehicle's on-board battery management system controls the off-board charger to deliver DC directly to the battery.

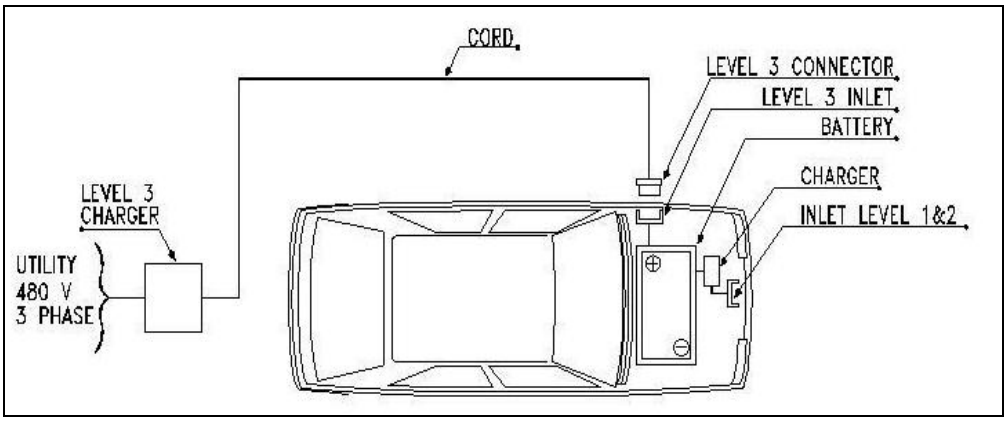

Figure 3-6 DC Fast Charging

This off-board charger is serviced by a three phase circuit at 208, 480 or 600VAC. The SAE standards committee is working on a DC Fast Charging connector, but has placed the highest priority in getting the Level 1 & 2

connector approved first. The DC Fast Charger connector standard is expected to be approved in 2010.

eTec will be utilizing DC Fast Charging equipment in infrastructure developed in 2010.

DC Fast Charging was accomplished by eTec for the Chrysler EPIC in the 1990s and for industrial applications since 1998. Similar, though smaller, equipment will be used for the coming generation of EVs.

Figure 3-7 Chrysler EPIC DC Fast Charging (90kW) circa 1997

Note: Although not as common, a vehicle manufacturer may choose not to incorporate an on-board charger for Levels 1 and 2, and utilize an off-board DC charger for all power levels. In this case, the electric vehicle would only have a DC charge port. Another potential configuration that may be found, particularly with commercial vehicles, is providing 3-phase power directly to the vehicle. This configuration requires dedicated charging equipment that will be non-compatible with typical publicly available infrastructure.

G. Level 1 versus Level 2 Considerations

For a BEV (and some PHEV owners who choose the utility time of use rates), the preferred method of residential charging will be Level 2 (240VAC/single phase power) in order to provide the EV owner a reasonable charge time and to also allow the local utility the ability to shift load as necessary while not impacting the customer's desire to obtain a full charge by morning. For other PHEV owners, a dedicated Level 1 circuit may adequately meet the owner's charging needs.

BEV owners who have the opportunity for Level 2 charging at work or in public areas may find the vehicle battery remains at a higher charge and thus home charging time is not a concern and Level 1 will suffice. See Figure 2-1 for relative battery sizes and estimated recharge times.

H. General Requirements

This section identifies general requirements of EVSE.

- **Certification:** EVSE will meet the appropriate codes and standards, and will be certified and so marked by a Nationally Recognized Testing Laboratory (e.g., Underwriters Laboratories). Owners should be cautioned against using equipment that has not been certified for EV use.
- **Cord Length:** The EVSE will provide a maximum of 25 feet of flexibility from the wall location to the EV Inlet. This figure was obtained by taking the typical 15 foot car length to the 7 foot car width plus 3 feet to the EVSE permanent location. The EV Inlet location on the EVs will vary by manufacturer; however, this standard length should be sufficient to reach from a reasonably positioned EVSE to the Inlet.
- **Tripping hazard:** An extended EV cord may present a tripping hazard so the EVSE should be located in an area of minimum pedestrian traffic. An alternative would be to consider installation of an overhead support or trolley system to allow the cord to hang above the vehicle in the location of the EV inlet.
- **Ventilation Requirements:** If there are ventilation requirements, the EVSE will be required to energize a properly sized ventilation system. Such a requirement is expected to be rare since automobile manufacturers are expected to use non-gassing batteries. Some EV owners who convert their own vehicles to electric or purchase conversions vehicles may use gassing batteries. The approved EVSE will communicate with the vehicle and if ventilation is required but no ventilation system exists, the EVSE will not charge the vehicle. In multi-family or parking garage situations that may already have ventilation systems for exhaust of normal vehicle emissions, such a system would be expected to be sufficient. However, calculations should verify this result. It may also be impractical to wire the charger to the ventilation controls or costly to run the system for a single vehicle charging. In these cases, it may be prudent to identify that the chargers are intended for non-gassing batteries only.
- **Energized Equipment:** Unless de-energized by the local disconnect, the EVSE is considered electrically energized equipment. Because it operates above 50 volts, Part 19 Electrical Safety of the Occupational Health and Safety (OHS) Regulation requires guarding of live parts. EVSE may be positioned in a way that requires a physical barrier for its protection. Wheel stops are recommended to prevent a vehicle from contacting the EVSE. They also help position the EV for the optimum location for charging.

Figure 3-8 Wheel Stop[6]

Figure 3-9 Garage Wheel Stop[7]

[6] Rubberform Recycled Products LLC, www.rubberform.com

- **Shortest Run:** In addition to the above requirements, the lowest cost installation generally is the location closest to the electrical supply breaker because it minimizes the conduit run to the charger.
- **Ergonomics/Ease of Use:** Most EV owners will find it most convenient to have the EVSE located near the EV inlet. In some cases, it may be desirable to back into the garage which helps reduce the tripping hazard while at the same time reduces the electrical circuit run to the EVSE.

---

[7] ProPark Garage Wheel Stop, www.organizeit.com

4. Charging Scenarios

A. Single Attached/Detached Garages

- **Power Requirements:**

Level 1: Dedicated branch circuit with NEMA 5-15R or 5-20R Receptacle.

Level 2: Dedicated branch circuit hardwired to a permanently mounted EVSE with the following specifications: 240VAC/Single Phase, 4-wire (2 Hot, GND, and Neutral), 40Amp Breaker.

- **Cost Estimates**

$2,000 - $2,500 for a generic installation. Costs will vary based on length of the circuit run, electrical panel upgrades, and other factors.

- **Level 2 Notes:**

1. The breaker size recommended will meet the requirements of most all BEVs and PHEVs. Some PHEVs with small battery packs (See Table 3.1) may only require a 20 or 30Amp breaker for their recommended EVSE in which case the breaker can be easily changed.
2. The Neutral may not be required by some EVSE but since it is inexpensive to include and may be required at some point in the future if a different vehicle is purchased it is recommended.
3. For new construction, bring the circuit to a dual gang box with a cover plate for future installation of EVSE.
4. For new construction that is incorporating an advanced internet network within the home, an internet connection at the EVSE location would be advisable. For existing homes, the value of providing an internet connection at the EVSE location is unknown at this time and is left up to the individual homeowner. It is likely that wireless methods will be available where a hard connection is not available.
5. Many Level 2 EVSE suppliers will provide controls in the EVSE to control charging to programmable times to take advantage of off-peak power pricing. If not, home owners may desire to install a timer device in this circuit to control charging times.

- **Siting Requirements**

An indoor rated EVSE is acceptable for an enclosed garage. The EV owner will likely prefer a particular location for the EV. However, the EV should be positioned so that the above general requirements are considered. This often means the EV will be the furthest away from the residence entry into the garage.

The installation of the EVSE at the front of the vehicle may be acceptable unless the cord becomes a tripping hazard. Often the EVSE will be placed on an exterior wall to shorten the distance from the electrical box and at the same time positioning the EVSE out of the way.

If the EVSE is to be installed after the EV has been purchased, the location of the EV inlet will play a part in the location of the EVSE. It is best to keep the EVSE as close to the inlet as possible to minimize the cord splayed on the floor. If the branch circuit is installed prior to the EV purchase, the garage junction box should be on the wall closest to the utility service connection consistent with the general requirements above. Typical locations are shown in the figure below.

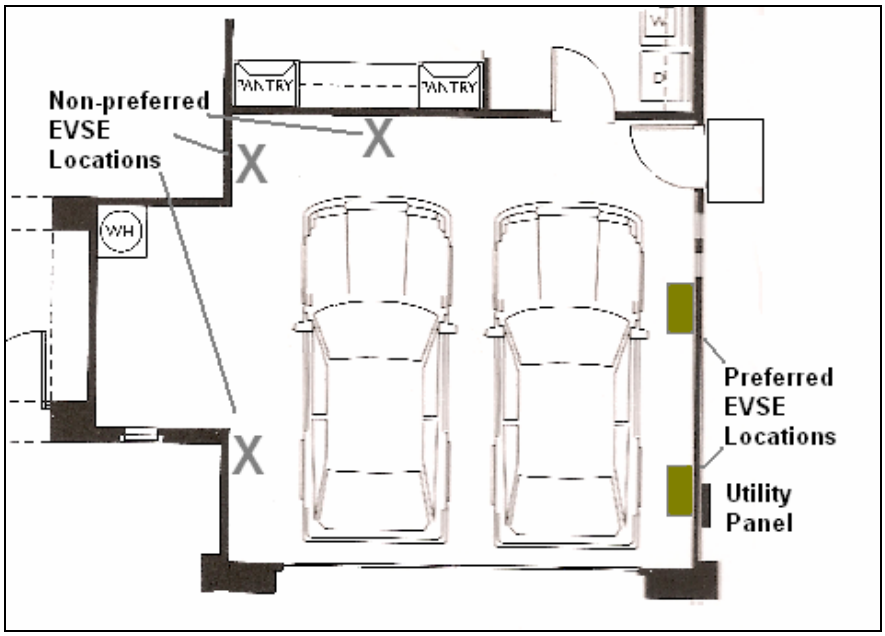

Figure 4-1 Double Garage Location for EVSE

In the above figure, the best location would be for the EV on the right. The non-preferred EVSE locations are in typical walking areas and could present a tripping hazard. In addition, these are further away from the utility panel. An option for the EV owner's desire to place the EVSE in these locations could be accommodated by using an overhead support of the charge cable and connector. If the EV inlet is on the left side of the vehicle, the owner could consider backing into the garage.

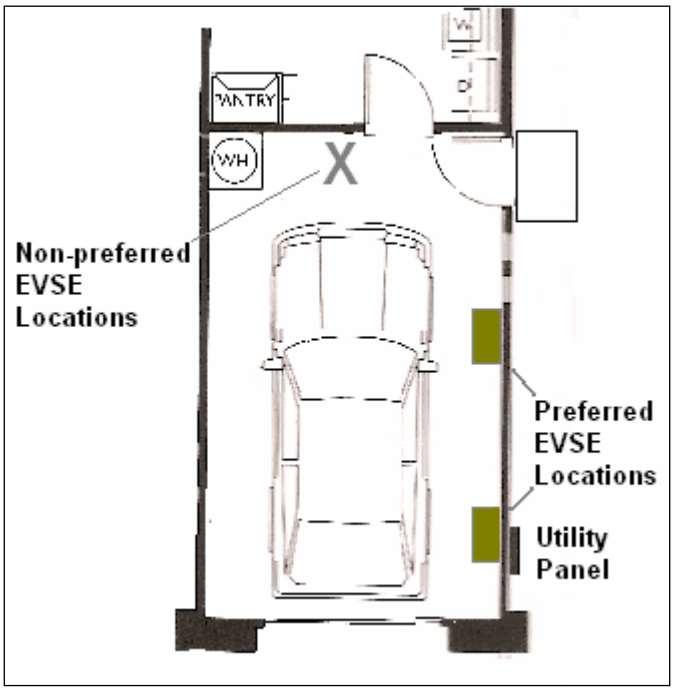

Figure 4-2 Typical Single Garage Location for EVSE

In the single garage environment, most locations will be acceptable for locating the EVSE except perhaps at the head of the vehicle because of tripping concerns. The preferred locations are selected because of proximity to the utility panel. Again, consideration of overhead support of the EVSE cable would allow EVSE installation where the owner prefers.

The National Electrical Code provides additional requirements should the EVSE be located in a hazardous area. The other materials stored in the garage should also be considered when locating the EVSE if they are determined to be of a hazardous nature.

Detached garages will include additional considerations in routing the electrical supply to the garage. Landscaping will be disrupted during the installation process. This may be of great significant to the owner and should be thoroughly planned in advance.

- **Installation Process**

Installation of the EVSE in a residential garage typically consists of installing a dedicated branch circuit from an existing house distribution panel to an EV outlet receptacle (125 VAC, 15/20 A) in the case of Level 1 charging or an EVSE (operating at 240 VAC, 40 A) for Level 2 charging. If the garage is built with the conduit or raceway already installed from the panel to the garage, the task is greatly simplified.

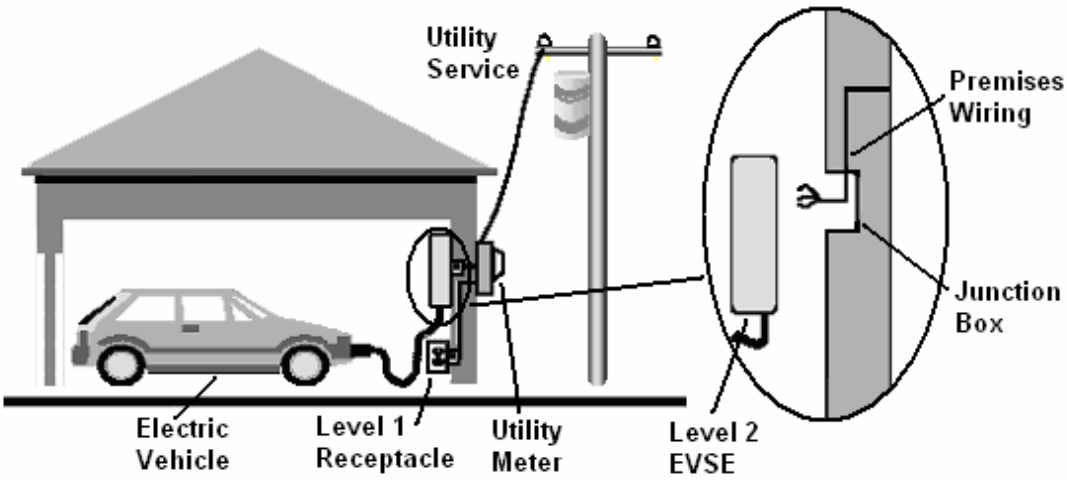

Figure 4-3 Typical Level 1 and Level 2 Installations for a Residential Garage

The specific steps involved in this process are shown in the flowchart below. In general, they include:

- Consultation with the EV dealer to determine whether Level 1 or Level 2 EVSE is required, whether ventilation will be required and what EVSE to purchase
- Consultation with the electric utility to determine rate structure, requirements for a special or second meter
- Consultation with a licensed electrical contractor to plan the installation effort including location of EVSE, routing of raceway from utility service panel to EVSE, Level 1 or Level 2 requirements, ventilation requirements, adequacy of current utility service, and obtain installation quote
- Submission of required permitting documents and plans
- Completion of EVSE installation and utility service components, if required
- Inspection of final installation

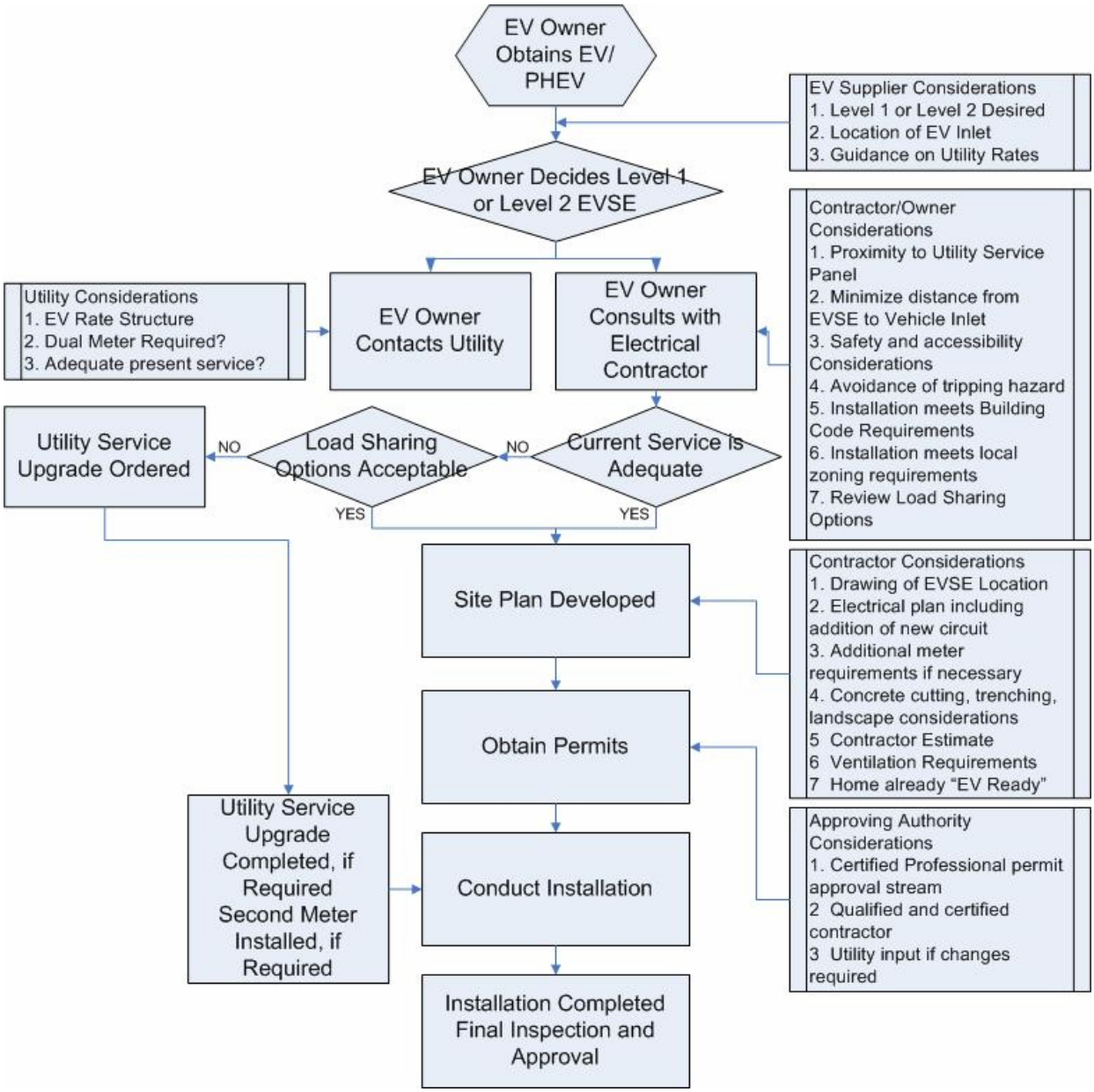

Figure 4-4 Installation Process for a Residential Garage/Car Port

If the garage has a pre-existing raceway, a 125 VAC, 15/20 amp circuit or a 240 VAC, 40 amp circuits can be installed.

Although a new home may already have the raceway installed, a permit for the service is required. Increasingly, standards are directing that a raceway for an electric vehicle will be included in new home construction. The conductors may or may not be included. If included, consideration should be given to sizing the conductors for the 240 VAC, 40 amp circuits required for Level 2 charging but installing the 120 VAC, 20 amps Level 1 breaker and

receptacle. The home owner would have a functional circuit that could be upgraded easily to Level 2 if desired.

Contact a local electrical contractor to evaluate the options of adding a new service or upgrading the existing service, as utility fees may apply.

B. Car Port

- **Power Requirements:**

Power requirements are the same as Garage scenario above.

- **Cost Estimates**

$2,000 - $2,500 for a generic installation. Costs will vary based on length of the circuit run, electrical panel upgrades, and other factors

- **Siting Requirements**

The siting requirements for the car port will include those identified above for the garage. Some owners may elect to place the EVSE in the garage but charge a vehicle outdoors. This is similar to the carport requirements. A carport is considered an outdoor area and the EVSE should be properly designed for exterior use. Consideration must be given to precipitation and temperature extremes. In geographic areas that experience high precipitation, pooling of water in the carport or driveway may be a concern. While the EVSE is safe, owners may have a concern about standing in pooled water while connecting the EVSE. Consultation with the owner will be required when locating the EVSE.

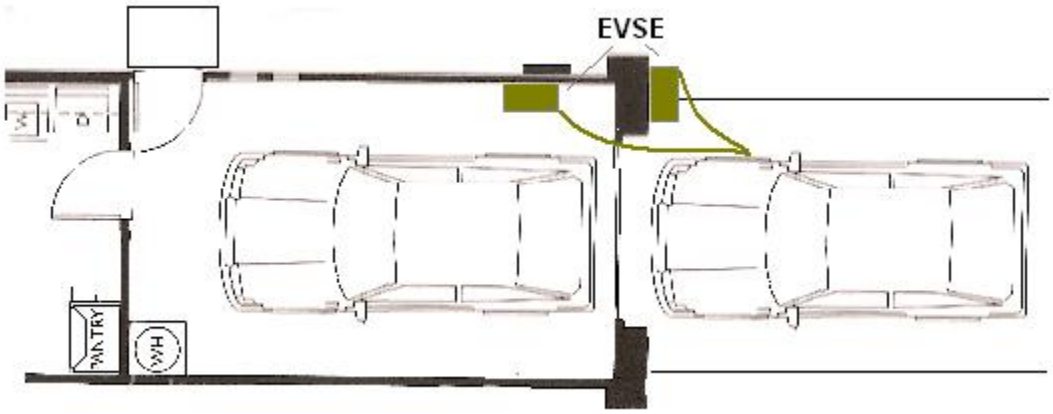

Figure 4-5 Installation Considerations for Outdoor Parking

Freezing temperatures can create an issue for cords freezing to the parking surface and cord support should be considered. Adequate lighting is an additional consideration, along with mitigating efforts to prevent vandalism as noted in Section 5 below. The installation process is similar to the garage process outlined above.

- **"Consultation with Landlord or HOA"**

An installation in a multi-family location may involve a more lengthy approval process for zoning considerations. The local zoning requirements may require a public hearing or pre-approval by a Design Review Committee.

C. Multi-Family Dwellings

- **Power Requirements:**

Power requirements are the same as Garage scenario above.

- **Cost Estimates**

Costs will vary based on length of the circuit run, trenching, electrical panel upgrades, and other factors.

- **Siting Requirements**

In multi-family dwellings, there will be additional considerations because the apartment or condominium owner must also be involved in any siting decisions. It is best that the potential EV owner work through the details identified here prior to purchasing an EV. A site close to the owner's dwelling will be desired but may not be in the best interests of the apartment owner. Special flooding or drainage conditions may apply. Lighting and vandalism concerns will exist. Payment methods for the electrical usage will need to be identified. There may be insurance and liability questions as well as damages if vandalized. All the concerns should be discussed prior to the EV purchase.

Should the EV owner later relocate, the electrical installation raceway and panel upgrades, if any, will be retained at the multi-family location. Ownership of the EVSE needs to be identified clearly. If the EV owner takes the EVSE, site restoration may be required. Circuit removal or de-energizing methods should be settled. Discussion with the utility is also required since there may be metering questions or issues to be resolved. In condominiums, the Home Owners Association (HOA) may be involved to approve EV additions.

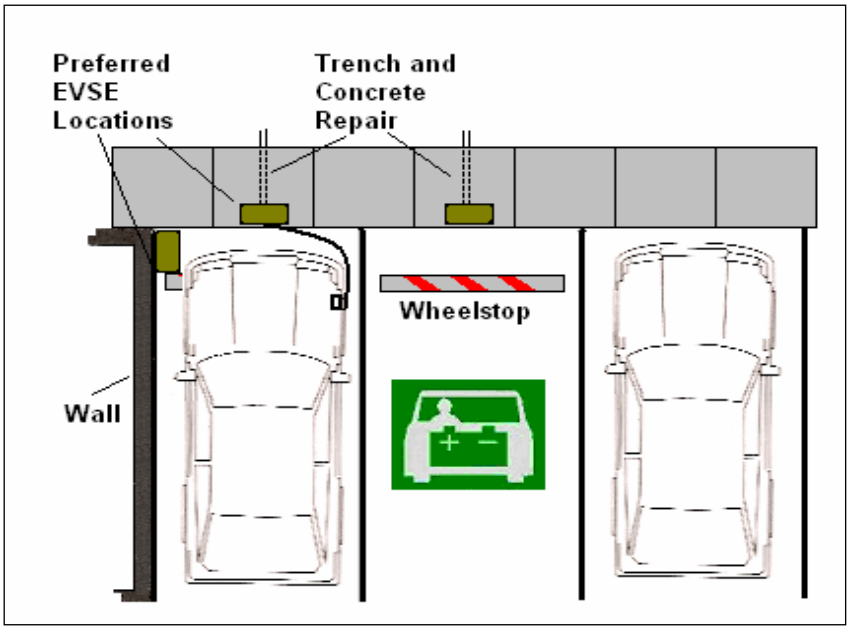

Figure 4-6 Typical EVSE Installation in Multi-Family Lot

In general, the EVSE will need to be outdoor rated unless the location is well protected from the environment. The installation of the EVSE at the front of the vehicle may be the only choice unless an adjacent wall is available. If located at the front of the parking stall, the EVSE should be located on the vehicle side of any walkway to minimize the cord becoming a tripping hazard. The walkway for pedestrians would be on the back side of the EVSE. Because a wheel stop will be installed, consideration should also be given to make sure the EV parking is not in an area of normal pedestrian traffic in order to avoid pedestrians tripping over the wheel stop when no vehicle is present.

Trenching and concrete work and repairs are likely. Consideration must be given to maintaining a safe and secure area around the parking stall to avoid tripping hazards or EVSE interference with other operations.

- **Installation Process**

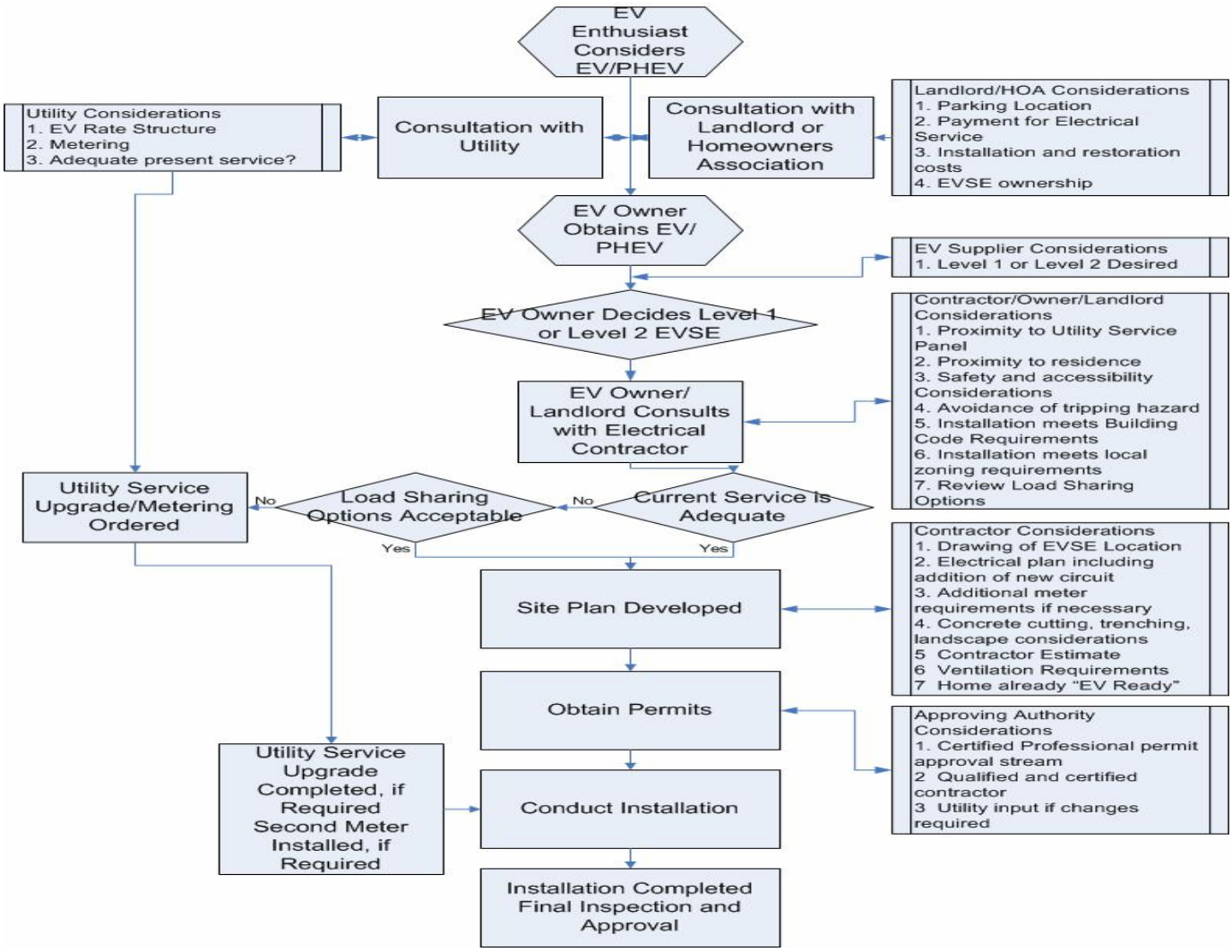

Figure 4-7 Installation Process for Multi-Family

If the parking area has a pre-existing raceway, the wishes of the EV owner and property owner can determine whether this will be a 120 VAC, 15/20 amp circuit or a 240 VAC, 40 amp circuit. This would also require review by the electrical contractor to make sure the service panel is sufficient to support the choice. Although a raceway may have been installed previously, a permit for the service is required.

- **Multiple Parking Stall Installation**

In a new construction or retrofit situation, broad charging infrastructure installation in a multi-residential building will require the services of an electrical consultant to determine the best approach for the situation. For example, the proponent may consider a load control strategy to manage the charging load within the capacity of the electrical service to the building rather than upgrading the service size to accommodate increased building load from electric vehicle charging.

D. Commercial Fleets

- **Power Requirements**

Dedicated branch circuits hardwired to permanently mounted EVSE with the following specifications: 208VAC or 240VAC / Single Phase, 4-wire (2 Hot, GND, Neutral), 40Amp Breaker

Commercial fleet charge stations will likely include multiple charge locations and therefore with new construction the additional will need to be planned for when sizing the main service entrance section (SES). Since it is likely that most of the charging will occur during working hours, for existing buildings, the additional load may require an upgrade or new SES and/or utility supply.

Because of a potentially large electrical load, it is recommended that a network connection is provided in close proximity to the charge stations. This connection may be required for interface with the building energy management system or to implement local utility load control strategies.

- **Cost Estimates**

$40,000 - $50,000 for a generic installation of ten EVSE. Costs will vary based on length of the circuit run, trenching, electrical panel upgrades, and other factors.

- **Siting Requirements**

Commercial fleets make up the highest population of EVs at the present time. Utilities, governmental agencies and other private fleets have been encouraged and are encouraging the private adoption of EVs. A significant amount of planning is required to correctly size the EV parking and charging area. Consideration is given to the current requirements as well as anticipated future requirements. Electrical service requirements will be much higher than residential or multi-family installations and can have a significant impact on electrical usage and on the utility. For that reason, electrical utility planners need to be involved early on in the fleet planning process.

The individual home owner will be interested in charging his/her vehicle off-peak. That interest will be greater for the fleet manager.

Flood prone area restrictions must be considered as well as issues of standing water. Often large parking lots will have low spots where water accumulates. Although the Level 2 EVSE contains the proper protection device, employees will not be comfortable operating the EVSE in standing water.

Installation of the EVSE in a commercial facility typically consists of installing new dedicated branch circuits from the central meter distribution panel to a Level 2 EVSE. In a commercial fleet, there are typically many such EVSE units in adjacent parking stalls. Proximity to the electrical service is an important factor in locating this parking area. The length of the circuit run and the quantity will have a significant impact on the cost.

Because these EVSE units are in a designated area, the potential for pedestrian traffic is less and more consideration can be given for the most economical installation methods. In addition, the commercial nature of the site will allow greater overall security, such as fences and gates, so that the threat of vandalism is minimized.

Fleet managers must also be aware of other equipment to be stored in the vicinity of the EVSE. It is important that a hazardous environment does not already exist in the area planned.

Fleet manager interest and priorities can also stimulate the development of DC Fast Charging. The higher recharge rate means a shorter turn-around for each vehicle and maximizes on-road time. The 480/600 VAC is generally available in commercial facilities.

Figure 4-8 Level 2 Commercial EV Charging Location

- **Installation Process**

The installation process is similar to the processes shown above except that much more detailed planning is involved prior to the owner's final decision and obtaining permits.

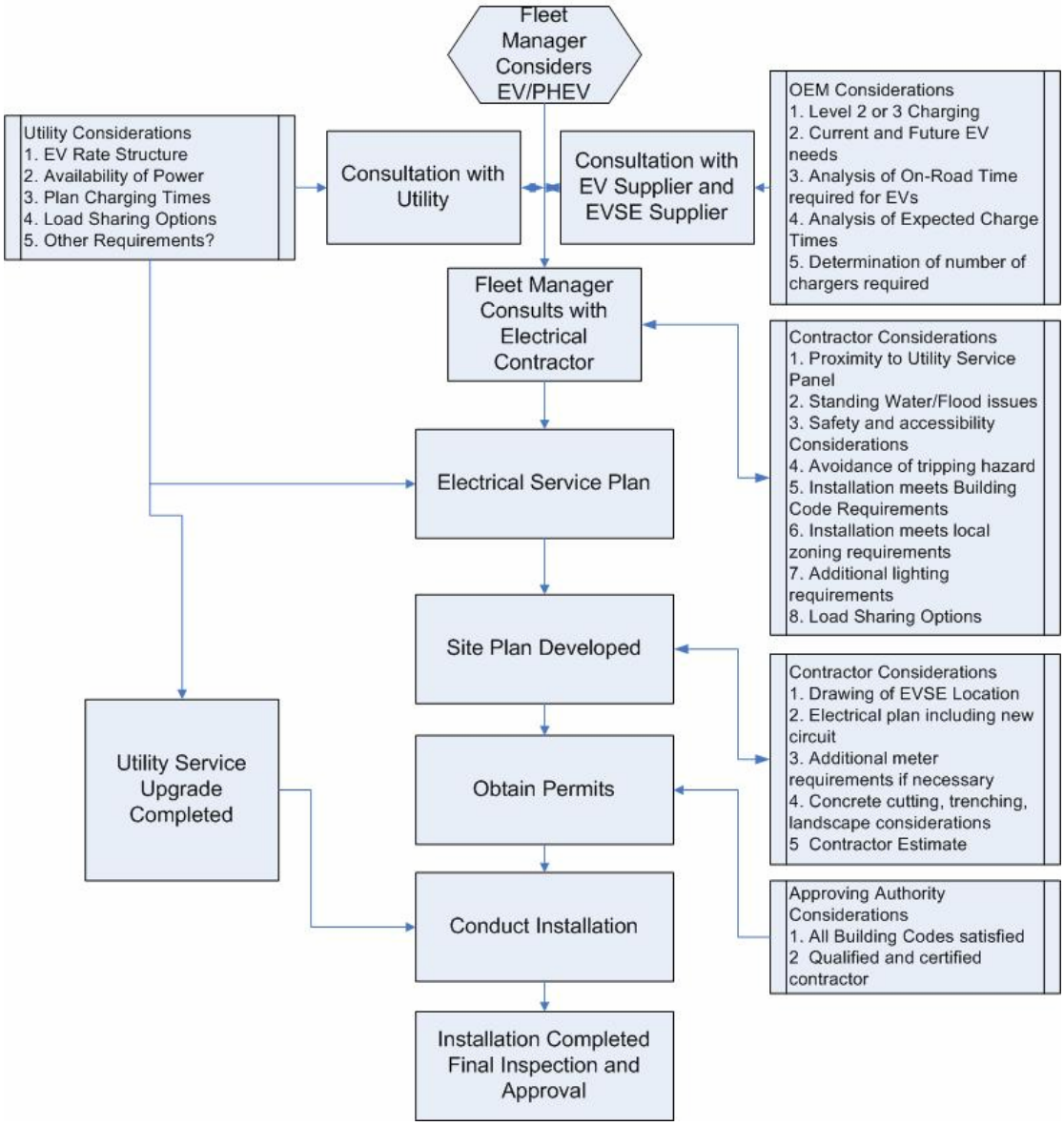

Figure 4-9 Installation Process for Commercial Fleet Operations

D. Publicly Available Charging Stations

A significant factor in the consumer adoption of EVs will be the ability to extend the range of battery-only power. This can be accomplished by the wise installation of publicly available charging locations. The EV Micro-Climate© program focuses on this area because of its importance.

Publicly available charging may employ a mix of Level 1, 2 and 3 DC Fast charging stations, however, the charge return generated by a dedicated Level 1 charging station will be minimal for a BEV and its use is not recommended nor included in the EV Micro-Climate©. The recommended configuration for a publicly available Level 2 charging station is one equipped with J1772 connector. This will accommodate all vehicles equipped with a J1772 inlet including PHEVs and other EVs that require lower kW charging than a BEV.

Publicly available charging may be served by either Public or Commercial charging stations. Public charging stations are those EVSE installed on public owned property such as city or county property. Curbside chargers are a typical example. Commercial charging stations are those EVSE installed on private or commercial property such as retail locations.

The determination of publicly available Level 2 EVSE charging sites should focus on locations where the EV owner will be parked for a significant period of time i.e. 1 – 3 hours. An appreciable recharge can occur during this time period. Locations where owners can be expected to park for this time include restaurants, theaters, shopping malls, governmental facilities, hotels, amusement parks, public parks, sports venues, arts productions, museums, libraries, outlet malls, airports visitor lots, major retail outlets, among many other choices.

Businesses, such as electric utilities or those that wish to promote EV usage will install public charging near their building entrance in highly visible areas even though EV owner stay times may be shorter. As noted above, these stations should be Level 2.

The determination of publicly available DC Fast Charging EVSE charging sites should focus on locations where the EV owner will be parked for a relatively short period of time, i.e. 15 minutes, where an appreciable recharge can occur during this time period. Locations where owners can be expected to park for this time include convenience stores, coffee houses, service stations, drug stores, and fast food restaurants among many other choices. For DC Fast Charging, the availability of 480/600 VAC will be a consideration.

Publicly available charge stations will vary greatly in design and requirements. They also include a number of other requirements not found in residential and fleet applications such as signage and Point-of-Sale systems, as described in section 5.

- **LEED Building Certifications**

A driving force in the design, construction and operation of facilities is the Leadership in Energy and Environmental Design (LEED) Green Building Rating System. It was developed by the U.S. Green Building Council and it provides standards for environmentally sustainable construction and operation of facilities. It requires a study of the CO_2 emissions by company personnel and encourages, through monetary incentives or preferred parking, the use of alternative fuel vehicles. It provides credits for installing EV charging stations and suggests certain percentages of parking be devoted to alternative fuel vehicles. These locations will apply to employees as well as public using the facility. Companies interested in being LEED certified are excellent sites for publicly available charging stations.

- **Power Requirements**

Level 2: Dedicated branch circuits hardwired to permanently mounted EVSE with the following specifications: 208VAC or 240VAC / Single Phase, 4-wire (2 Hot, GND, Neutral), 40Amp Breaker

DC Fast Charging: Dedicated branch circuit hardwired to permanently mounted charger supplied with the circuit as specified in the installation manual. DC Fast Charging chargers rated up to 30kW they may require either 208AVC/3-Phase or 480VAC/3-Phase. For DC Fast Charging chargers greater than 30kW, they will likely require 480VAC/3Phase.

Example Sizes:

1. For 30kW Output Power, typical input power requirements are:

   208VAC/3-Phase, 4-wire (3-Hot, GND), 125 Amp Breaker, -or-

   480VAC/3-Phase, 4-wire (3-Hot, GND), 60 Amp Breaker

2. For 60kW Output Power, typical input power requirement is

   480VAC/3-Phase, 4-wire (3-Hot, GND), 125 Amp Breaker

Communication will likely be desired for any publicly available charge stations, but it is not necessarily required. Wireless methods will most likely be utilized, but if a hard-wire internet connection is available it is generally desired over wireless.

- **Siting Requirements**

Siting requirements for publicly available charging are similar to other stations previously noted but involve many additional considerations. Questions such as ownership, vandalism, payment for use, maintenance, and data collection are addressed in following sections.

Flood prone area restrictions must be considered as well as issues of standing water or high precipitation. As noted above, people will not be comfortable operating the EVSE in standing water. Unlike Fleet use, the area designated for Public use should be in a preferred parking area. Also unlike Fleet use, the area is public and the threat for vandalism will be greater. This will likely be in a high pedestrian traffic area so the considerations for placement of the charger to avoid the charge cord or the wheel stop from being tripping hazards is very important.

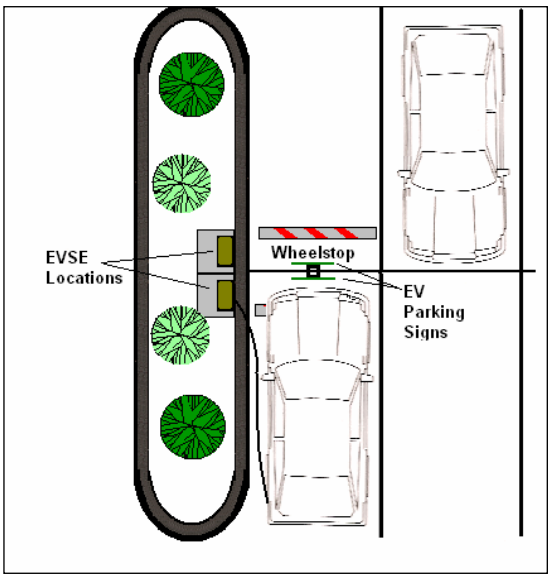

Figure 4-10 Example Publicly Available Charging Layout

There are several ways to address the protection of the equipment, shelter, signage and pedestrian safety. The following pictures provide several examples.

Figure 4-11 Publicly Available Charging Examples

Some publicly available charging will be driven by commercial businesses interested in promoting electric vehicle use through personal preference or as part of the LEED certification. They may decide on their own to purchase and install systems or participate in such costs. Other business owners will be receptive to placement of chargers in their parking lots once approached with incentives. Other public, private and governmental agencies will install EVSE out of support for EVs. Mapping these selected locations will provide input to an overall municipal plan identifying the ideal sites to ensure wide coverage of publicly available charging.

Publicly available sites will also invoke accessibility requirements and the quantity of parking stalls with EVSE that are accessible. This is further discussed in Section 5.

Lighting and shelter are extremely important in public sites. The EV owner must feel safe when parking at night in addition to being able to read directions and properly locate the EV connector and insert into the EV inlet. An indoor stall in a parking structure or a sheltered stall in the outdoor parking lot provides additional convenience for the EV owner.

Installation of the EVSE in a public area typically consists of installing new dedicated branch circuits from the central meter distribution panel to a Level 2 EVSE. There will likely be many such EVSE units in adjacent parking stalls. Proximity to the electrical service is an important factor in locating this parking area. The length of the circuit run and the quantity will have a significant impact on the cost.

The cost of providing power to the EV parking location must be balanced with the convenience of the parking location to the facilities being visited by the EV owner. It may be more convenient for the EV owner for a large shopping mall to have two or three EV parking areas rather than one large area although the cost for the three will be greater than the cost for the one.

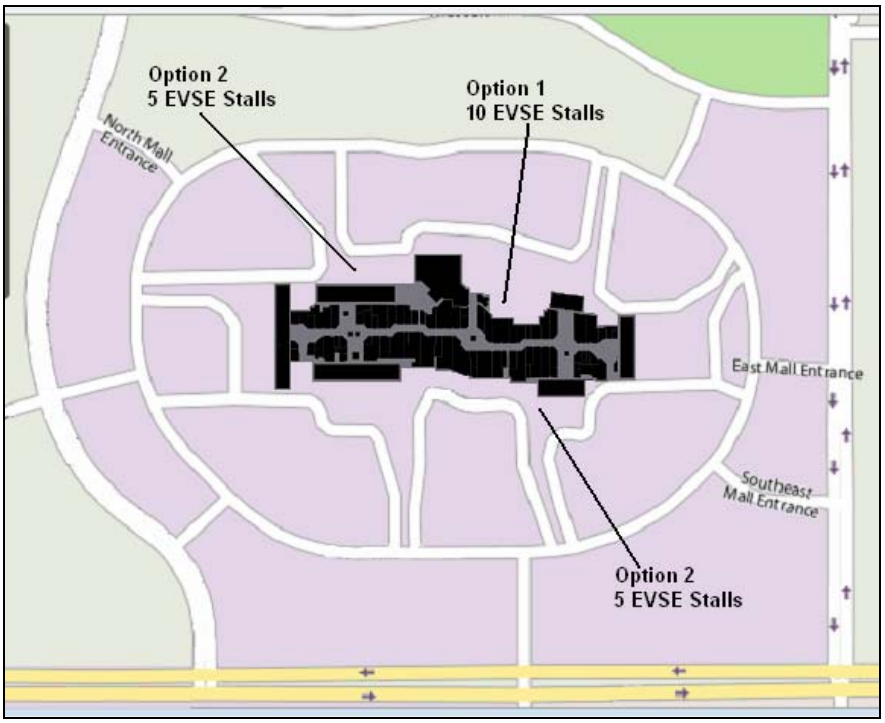

Figure 4-12 Example Shopping Mall EVSE Parking

The local area aesthetics are also important and they may require the installation of landscaping or screening walls to shield the electrical transformer, panel or other equipment from the public eye.

Trouble reporting can be very important in public charging areas. Each publicly available charging area should be equipped with a method whereby the EV user can notify the equipment owner of trouble found with the equipment. Public satisfaction will suffer if stations are found to be out of service or not kept in an appealing condition. This may be a normal business call number or a service call number which monitors many publicly available charging locations. This will require a communications line. At a minimum, a sign may be posted at the EVSE location directing comments to a particular office or store location.

Figure 4-13 Indoor Charging

Figure 4-14 Outdoor Charging

- **Installation Process**

The installation process is similar to the processes shown above except that a lot more detailed planning is required prior to submittal of plans for obtaining permits.

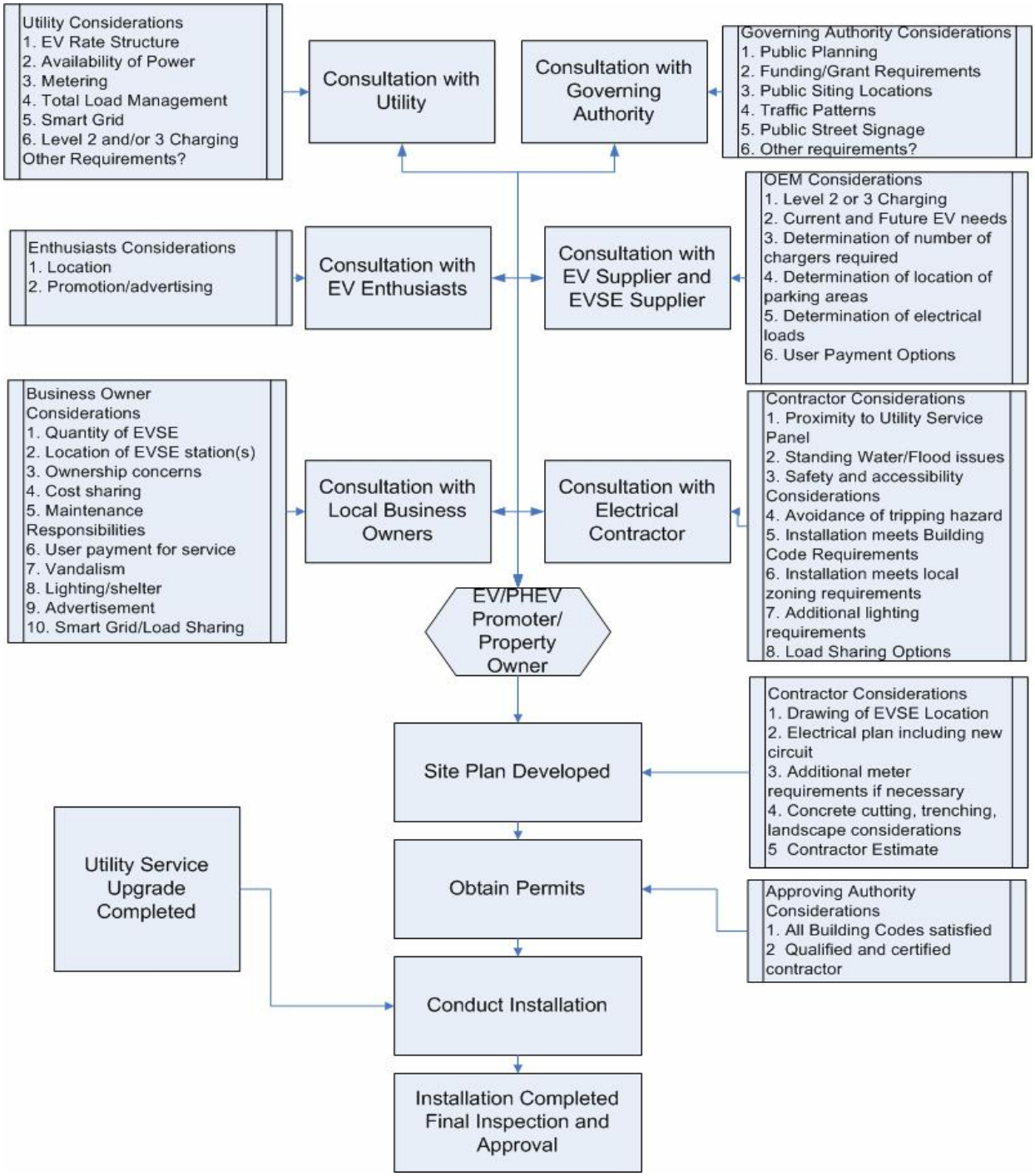

Figure 4-15 Installation Flowchart for Public Charging

The quality of the advance planning will determine the quality of the final installation and ultimately, the EV owner's acceptance and satisfaction.

- **Curbside Charging**

Curbside Charging is not necessarily associated with a commercial business. Generally speaking, these areas are owned by the municipality rather than private interests. Many of the same considerations noted above apply.

Figure 4-16 Curbside Charging

5. Additional Charging Considerations

A. Signage

In addition to the signs and warnings required by NEC identified in Section 6, information signage is recommended for publicly available charging stations. Signage has two purposes: keeping non-EV vehicles from parking in charging station spots and assisting EV drivers locate charging stations.

Figure 5-1 No Parking Except for Electric Vehicles Sign

Previous experience has shown that signs that follow the red on white standards for No Parking work best to keep non-EV drivers from occupying charging station spots. The Manual on Uniform Traffic Control (MUTCD) defines the standards used by road managers nationwide to install and maintain traffic control devices on all public streets, highways and private roads open to the public. The examples in Figure 5-1 follow MUTCD standards. Sites that have friendly green or blue EV Parking or EV Parking Only signs are not recognized by the public. If the signage is blue in color, it can be mistaken for an accessible location. Green signs are often mistaken for short-term parking signs.

Figure 5-2 Wayfinding Sign

Widespread adoption of EVs will include maps or websites identifying charging locations. It is helpful to post EV parking area signs on adjacent streets and access points directing EV drivers to the charging locations. A wide variety symbols for charging station wayfinding were developed in the mid 1990s. A number of designs have been suggested to update these symbols. Stakeholders have identified criteria including being able to symbolize the next generation of EVs that do not use lead acid batteries and modern charging stations that do not use a two prong plug emanating from the vehicle or the charging station. Ideally, a common design will be used from federal and state highways to local streets to above the charging stations.

B. Lighting and Shelter

For commercial, apartment, condo and fleet charging stations, adequate lighting is recommended for safety and convenience. Shelter is not typically required for outdoor rated equipment. For geographic locations that have significant rainfall or snow, providing shelter over the charging equipment will provide added convenience to potential EV users. Locations within parking garages or private garages that are well protected from the environment may utilize EVSE that is not specifically outdoor rated.

Lighting should be sufficient to easily read associated signs, instructions, or controls on the EVSE and provide sufficient lighting around the vehicle for all possible EV Inlet locations.

Figure 5-3 Public Charging with Shelter and Lighting

In residential garages or carports, lighting is also important so that pedestrians can avoid tripping over extended charge cords while the EV is charging.

C. Accessibility Recommendations

Current state and federal regulations do not provide design criteria that specifically address EV parking and charging; however, certain design requirements were added to the National Electric Code for accessible EVSE and some municipalities provide guidance for accessible EV parking locations. New standards may be developed; therefore, recommendations herein constitute the best guidance to date.

There are two situations to consider when establishing charging stations and accommodating persons with disabilities: where the primary purpose is EV charging and where the primary purpose is accessible parking.

EV Charging is the Primary Purpose

When EV charging stations are provided at a site in addition to regular parking, EV charging is considered the primary purpose. Parking spaces with accessible EV charging stations are not reserved exclusively for the use of persons with disabilities and a disabled parking pass would not be required.

To enable persons with disabilities to have access to a charging station, EV connectors should be stored or located within accessible reach ranges. In addition, the charging station should be on an accessible route between the charging station and around the vehicle.

Accessible EV charging stations should be provided according to Table 5-1.

Table 5-1 Accessible Charging Station Recommendations

EV Charging Stations	Accessible to EV Charging Stations
1 – 50	1
51 – 100	2

The accessible EV charging stations should be located in close proximity to major buildings and site facilities; however, the EV charging stations need not be located immediately adjacent to the buildings and other facilities like traditional ADA parking since EV charging, not parking, is considered the primary purpose.

Accessible Parking is the Primary Purpose

If charging stations are placed in existing accessible parking spaces, then the primary use of that space must be accessible parking; that is, a disabled parking pass would be required to park in this EV charging space.

The federal Americans with Disabilities Act, Revised Code of Arizona and Arizona Administrative Code identify requirements for location, design and number of parking spaces for persons with disabilities.

Note that it is important that the placement of the charging station in an existing accessible parking space should allow adequate space (minimum of 36 inches) for a wheelchair to pass the vehicle wheel stop.

D. Safety Issues related to Indoor Charging

The possibility of invoking the ventilation requirements or hazardous environment requirements of the NEC exists when installing indoor charging. When the EVSE connector makes contact with the EV inlet, the pilot signal from the vehicle will identify whether that the battery requires ventilation. While most BEV and PHEV batteries do not require ventilation systems, some batteries, such as lead acid or zinc air, emit hydrogen gas when charged. Most vehicle manufacturers will identify clearly that their batteries do or do not require ventilation. Without adequate ventilation, the hydrogen gas concentration may increase to an explosive condition. The Lower Flammability Limit of hydrogen in air is 4% mixture by volume. Locations are hazardous when 25% of the limit is reached or 1% mixture by volume. The EVSE contains controls to turn on the ventilation system when required and also to stop charging should that ventilation system fail.

Recognizing that hydrogen is lighter than the air mixture, concentrations would exist near the ceiling. The ventilation system should take this into account to exhaust high and replenish lower.

Indoor charging can also provide a challenge with respect to lighting, tight access and other material storage. Often areas of an enclosed garage can be poorly lighted and when combined with the tight access around the vehicle and other equipment stored in and around the vehicle parking stall, the possibility of personal injury from tripping exists.

E. Installations Located in Flood Zones

Permits for construction of facilities, including EV charging stations, include reviews to determine whether the site is located in a flood prone area. The Code of Federal Regulations, Title 44 Emergency Management and Assistance, Part 60 Criteria for Land Management and Use includes the following requirement:

> "If a proposed building site is in a flood-prone area, all new construction and substantial improvements shall (i) be designed (or modified) and adequately anchored to prevent flotation, collapse, or lateral movement of the structure resulting from hydrodynamic and hydrostatic loads, including the effects of buoyancy, (ii) be constructed with materials resistant to flood damage, (iii) be constructed by methods and practices that minimize flood damages, and (iv) be constructed with electrical heating, ventilation, plumbing, and air conditioning equipment and other service facilities that are designed and/or located so as to prevent water from entering or accumulating within the components during conditions of flooding."[8]

For EVSE components, the two primary ways to minimize flood damage, prevent water from entering or accumulating and be resistant to flood damages involve elevation and component protection. These measures are required by the National Flood Insurance Program (NFIP).

---

[8] 44CFR60.3(a)(3)

Elevation refers to the location of a component above the Design Flood Elevation (DFE). That is the primary protection for EVSE. All locations approved for EVSE installation should be above the DFE. It may mean that the EVSE is located outside a garage if inside would be below the DFE. It may mean that certain areas of a condominium parking lot would not contain any EVSE if that elevation is not achievable. It may require EVSE charging stations on the third level of a parking garage instead of the first.

Component Protection refers to the implementation of design techniques that protect a component from flood damage when they are located below the DFE.

Wet flood proofing refers to the elimination or minimization of the potential of flood damage by implementing waterproofing techniques designed to keep floodwaters away from utility equipment. In this case, the rest of the structure may receive damage but the EVSE is protected by barriers or other methods.

Dry flood proofing refers to the elimination or minimization of the potential for flood damage by implementing a combination of waterproofing features designed to keep floodwaters completely outside of a structure.[9] If the entire building is protected from flood water, the EVSE is also protected.

F. Point of Sale Options

During the early adoption stage of EV ownership, most owners of publicly available charging stations will absorb the cost of the electricity used since this actual cost is low per use. However, as the public acceptance and ownership of EVs grow, more will favor having the option for point of sale. In most areas, only electric utilities can actually sell electricity so fee for convenience/service will likely be the strategy. Often a credit card transaction fee will well exceed the electricity cost of charging an EV. However, the availability and convenience of charging will be a service the public will desire and purchase. A fee for service can assist the EVSE owner in recovering equipment, installation, service and maintenance costs. Several options for point of sale options exist.

- **Card Readers**

Several types of card readers exist that may be incorporated with the EVSE. Credit/debit card readers would be simple to use and are already widely accepted by the public. The credit/debit card would record a fee for each time the publicly available charging is accessed and based upon the accessibility rather than length of time on charge.

A smartcard is a card that is imbedded with a microprocessor or memory chip and it can more securely store more detailed information than a credit/debit card. The smartcard could be sold as a monthly subscription and embedded with more information about the user. That information could be captured in each transaction and used for data recording as noted in Section H below. The smartcard could be used for a pre-set number of charge opportunities or to bill a credit card number for each time of use.

---

[9] FEMA Publication 348 *Principles and Practices for the Design and Construction of Flood Resistant Building Utility Systems,* November 1999

In both cases, a communication system from the reader to a terminal for off-site approval and data recording will be required. Approval received may then close a contact for power to be supplied to the EVSE. The cost of this system and its integration into the EVSE will be a design consideration.

Figure 5-4 Smartcard Reader[10]

- **Parking Area meters**

People are very familiar with parking meters used in public parking. A simple coin operated meter is an option for EV parking areas and can be installed at the head of each EVSE parking stall. Another method in common use is for public pay parking lots where a central kiosk is used for credit card purchases. The parking stall number is identified at the kiosk and a parking receipt issued that can be displayed in the vehicle. There is little cost for the meter and a single kiosk reduces the point of service cost for the whole parking lot. This system will require an attendant to periodically monitor the area for violations. Penalties for violators will need to be determined. A coin operated meter also may invite vandalism.

- **Radio-Frequency Identification (RFID) Subscription Service**

Like the smartcard, an RFID fob can be programmed with user information. The RFID reader collects the information from the fob to activate the EVSE station. A monthly subscription for the user keeps the fob active and the monthly fee can be based upon number of actual uses or a set fee. The reader is programmed for the accepted RFID.

Figure 5-5 RFID Fob[11]

[10] ACR-38 Smart Card Reader by Advanced Card Systems

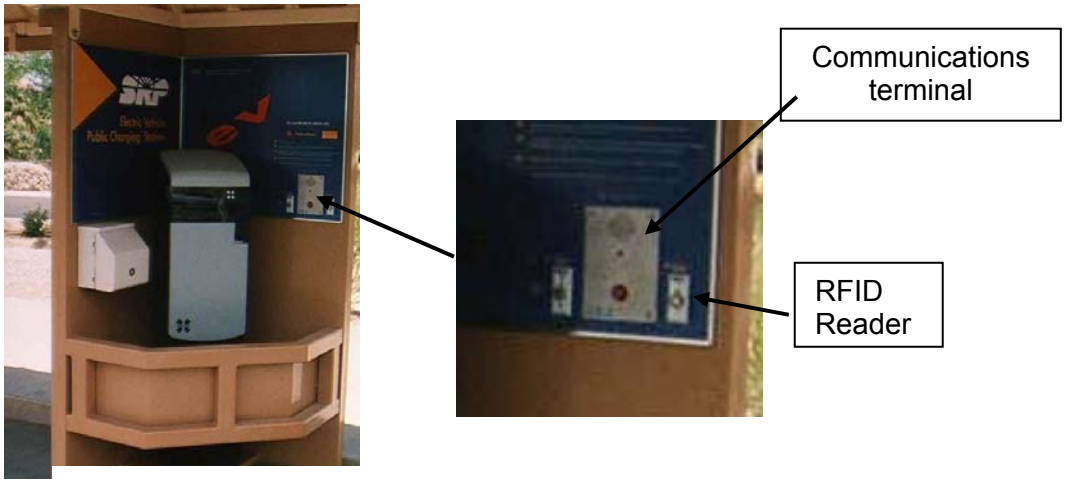

Figure 5-6 RFID Reader and Communications Terminal

G. Data Collection

More than simply recording payment for service, the use of a smartcard or RFID can substantially increase the amount of information available at each publicly available charging station. Data collection systems can track usage at each of the stations and provide feedback on actual EV usage. It may be found that usage at some venues is lighter than expected whereas others may be heavier. This information could be helpful in expanding publicly available charging locations. In addition, the time of day usage may show peak usage at expected or perhaps unexpected times which may impact power utilization. Some EVSE may include features to allow a wide range of data to be collected.

H. Vandalism

Publicly available charging carries the possibility of vandalism and theft. Destruction of property through purposeful defacing of equipment is a possibility, however, such destruction actually proved to be very minor during EV usage in the mid 1990s. Still, as public acceptance and the quantity of publicly available charging sites continue to grow, steps should be taken to minimize this possibility.

Most EVSE can be constructed of materials that will clean easily and removal of graffiti can be accomplished. Careful planning on site locations to include sufficient lighting and equipment protection will discourage damage and theft. Motion sensor activated lighting may be a benefit to users and a deterrent for abusers. EVSE with cable retractors or locking compartments for the EVSE cord and connector may be designed. Location of the EVSE in security patrolled areas or within sight of manned centers will discourage vandalism.

EVSE Owners in condominiums and apartments may desire to protect the equipment with a lockable secure cabinet to prevent unauthorized use and for vandalism protection.

---

[11] Texas Instruments RFID

I. Station Ownership

Ownership of the individual charging station may not be entirely clear. A business owner may wish to host publicly available charging but may not have the legal right to the parking lot or for making improvements. Charging stations constructed with public grants or other financing may have split ownership. One entity may own the charger and another may own the infrastructure. The sale of a business may include the EVSE or the sale of the property may include both. EVSE may be rented or leased equipment. Before planning any installation, it is important to identify the entities that have legal rights with respect to the equipment and its installation. Whose approvals are required to obtain the permits and whose approvals are required to remove the equipment later?

For individual EV owners, the ownership of the EVSE should reside with the owner. The ownership of the installation should reside with the property owner. However, both may share legal responsibilities and liabilities for the equipment and both should be protected by insurance.

For publicly available charging, there may be a combination of owners. Utilities may wish to own and manage the public charging infrastructure in order to manage power requirements. In a successful EV market penetration, ownership of new public charging may shift to private ownership. Several businesses may join together to promote EV usage and may share in the EVSE ownership. However, there should be one individual business entity tasked with the responsibility of ownership along with proper contact information to be shared with the local utility.

J. Maintenance

The EVSE typically will not require routine maintenance. However, all usable parts can wear and periodic inspections should be conducted to ensure that all parts remain in good working order. Periodic cleaning may be required depending upon local conditions. Testing of communications systems and lighting should be conducted periodically. Repair of accidental damage or purposeful vandalism may also be required. Unless otherwise agreed, these responsibilities generally fall to the owner identified in Section G above.

6. Codes and Standards

During the initial introduction of EVs in the early 1990s, stakeholders representing the automotive companies, electric utilities, component suppliers, electric vehicle enthusiasts, equipment manufacturers and standards and national testing organizations worked to obtain consensus on methods and requirements for EV charging. This resulted in revisions to building codes, electric codes, first responder training, and general site design and acceptance documentation. These requirements are designed to protect the public and make EVSE accessible for use.

Equipment is designed to EVSE standards set by organizations, such as the Society of Automotive Engineers, and is tested through National Recognized Testing Laboratories, such as Underwriters Laboratories. This testing certifies that the equipment is suitable for its designed purpose. The equipment installation is required to follow the rules of the National Electric Code and the Building Codes. Both of these codes can be augmented by State or local governing bodies. Frequently the codes will also affect the standards provided - as is the case for Electric Vehicles.

Nothing within these Guidelines should be construed to allow any detail of the EV charging installations to deviate from the adopted building codes and planning ordinances of each jurisdiction in which they are installed. Our intent is to develop standard plans for each jurisdiction and to have those approved prior to requesting permits or inspection approvals from that jurisdiction. We understand tat those standard plans may vary slightly from jurisdiction to jurisdiction based on their specific adopted building codes and planning ordinances.

Regulatory Agencies are responsible for monitoring the installation process to ensure that the proper codes and standards are being implemented in order to protect the public health and conform to safety regulations.

A. Regulatory Agencies

The federal government as well as state, county and city's have model building codes established that provide minimum construction requirements for safe construction and installation processes.

The City of Phoenix, for example, currently recognizes, among others, the International Building Code and Arizona Revised Statutes. These model codes as well as national codes such as the National Electric Code are updated on a regular basis, based on industry performance and technical advances.

B. National Electric Code

The National Electric Code (NEC) is part of the National Fire Code series established by the National Fire Protection Association (NFPA) as NFPA 70. The NEC codifies the requirements for safe electrical installations into a single, standardized source. This code is adopted by state and local jurisdictions and may be augmented by those jurisdictions to be applied as the local practice. When identifying the electrical requirements for EVSE installation, it is important to confirm with the local jurisdiction on its local requirements in addition to the national code standard. The NEC is updated every three years. The current published adopted edition is 2008, not all jurisdictions have approved this and care should be taken to follow the electrical code in place for each jurisdiction. Section 625 of the NEC specifically addresses Electric Vehicles.

C. SAE and UL

Currently, the Society of Automotive Engineers (SAE) has determined that there will be a single conductive coupler design. The J1772 “SAE Electric Vehicle Conductive Charge Coupler” is the standard that is being used by automotive suppliers in the United States. While J1773, the Inductive Charge Coupler is still active, none of the automakers are using this method.

Applicable SAE Standards include:

- SAE J1772
- SAE J2293
- SAE J2847
- SAE J2836
- SAE J2894
- SAE J551

SAE J2293 establishes requirements for EV and the off- board EVSE used to transfer electrical energy to an EV from a utility source. This document defines, either directly or by reference, all characteristics of the total EV Energy Transfer System (EV-ETS) necessary to insure the functional interoperability of an EV and EVSE of the same physical system architecture. The ETS, regardless of architecture, is responsible for the conversion of AC electrical energy into DC electrical energy that can be used to charge the Storage Battery of an EV. J2847 provides specifics on digital communications. J2836 provides use case for digital communications between vehicle and EVSE. J2894 addresses on-board charger power quality. J551 provides standards for electromagnetic compatibility.

Underwriters Laboratories (UL) provides testing and certification that equipment complies with relevant standards especially in areas involving public safety. The following UL standards form a basis for certifying EVSE:

- UL 2202 Electric Vehicle (EV) Charging System Equipment
- UL 2231-1 Personnel Protection Systems for Electric Vehicle (EV) supply Circuits: General Requirements
- UL 2231-2 Personnel Protection Systems for Electric Vehicle (EV) supply Circuits: Particular Requirements for Protection Devices for Use in Charging Systems
- UL 2251 Plugs, Receptacles and couplers for Electric Vehicles

Equipment that successfully completes the testing is “certified”, “approved” or “listed” as meeting the standard. In general, the SAE and UL requirements are more restrictive and are expected to be incorporated in harmonized standards.

D. Occupational Safety and Health

Under the Occupational Safety and Health Act of 1970, OSHA's role is to assure safe and healthful working conditions for working men and women; by authorizing enforcement of the standards developed under the Act; by assisting and encouraging the States in their efforts to assure safe and healthful working conditions; by providing for research, information, education, and training in the field of occupational safety and health.[12]

The Arizona State Department of Labor and Industries publishes the Safety and Health Core Rules, which are the basic safety and health rules needed by most employers in The State of Arizona.

E. Engineering, Permitting & Construction

The process flowcharts identified in Figure 4-4, 4-7, 4-9 and 4-15 all require permitting of the work. A typical permit application will include the name of the owner or agent, the physical address where the work will be conducted, parcel number, the voltage and amperage of the system, the name, address and license number of the qualified contractor and whether additional trades will be involved as well as other requirements by jurisdiction.

Service load calculations may be required. The electrical contractor will review the existing current service loading and consider the rating of the EVSE to be installed. A new loading calculation then will determine whether the existing service panel is adequate or new service is required.

It is recommended that local methods be considered to streamline the permitting process for residential EVSE installations. For BEV purchasers, the Level 1 Cord Set provided with the vehicle will require a significant charge period so that a Level 2 EVSE will be desired. Keeping the time span from purchase to fully functional and inspected EVSE installation will be important for customer satisfaction.

Installation drawing requirements may vary by jurisdiction to include simply layouts for residential installations to a full set of plans for public charging. In general, an electrical contractor from eTec's approved certified contractor network can complete the requirements for residential garage circuits.

For fleet and public charging, an engineering company is recommended to prepare the detailed site plans for installation. Several trades may be involved including general contracting, electrical, landscaping, paving, concrete, masonry, and communications systems. As noted above, careful planning is required to coordinate this effort and an engineering company can provide the detailed set of drawings that will be required. In addition, there may be several permitting offices involved with the approval of these plans.

---

[12] OHSA website www.osha.gov

7. Utility Integration

A. Background

Electric utilities are under significant pressure to maintain a dependable, clean and low cost electrical supply to their customer base. In order to achieve these goals, utilities are evaluating and in some cases implementing Smart-Grid technologies that allow them to control various electrical loads on their system. Through these Smart-Grid technologies, utilities can minimize new power plant, and electrical distribution and transmission investment by shifting and controlling load while minimizing the impact to the customer.

Advanced Metering Infrastructure (AMI) or Smart-Meters are being deployed by utilities to provide remote meter reading. Smart Meters also have the ability to control various customer loads.

Electric vehicles are one of the better loads to control for the utilities through Smart Meters because EVs have an on-board storage system and delaying the charge of the battery has no noticeable impact on the customer unlike a lighting or air-conditioning load which can have an immediate impact on the customer when turned off. Additionally, a neighborhood transformer may not be sized for every EV owning customer in an area to be charging at the same time. The ability to schedule the EV charging connected to a neighborhood transformer could significantly extend the life of that transformer or even delay or remove the requirement to replace the transformer with a larger size.

As the adoption of EVs increases, load control strategies for multi-family dwellings may allow the utility to control the charge times to maximize effectiveness and utilization of existing transformers.

During residential EVSE installations, the electrical contractor will evaluate the electrical service capabilities of the existing system. If inadequate power is available at the service entrance, an additional service panel or other upgrade may be required.

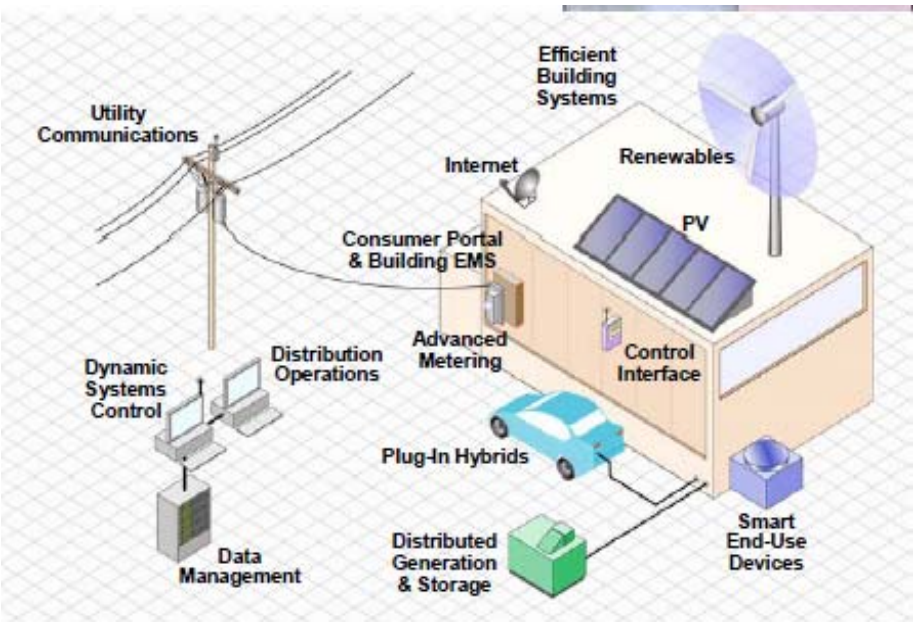

Figure 7-1 Smart Grid Infrastructure[13]

Figure 7-1 incorporates many design features of a Smart Grid/distributed energy storage system. Home use of photovoltaic or wind energy can supplement the utility power. A home area network (HAN) communicating with the Advanced Meter can control lighting, heating, cooling, and other major appliances. Given the right incentives, a home owner may elect to have the utility control total home consumption or delivery power back to the utility through the storage capability of the EV.

There are various mechanisms for utilities to control EV load including;

- **Time-of-Use (TOU)**

  TOU is an incentive based electrical rate that allows the EV owner to save money by charging during a designated "off-peak" time frame established by the utility. Typically, these off-peak times are in the late evenings through early mornings and/or weekends, during a time frame where demand on the utility electrical grid is at its lowest point. TOU is currently being implemented by some utilities but there is not a common approach at this time. Discussion with the local utility prior to installation of the charge station is recommended.

---

[13] Transportation Systems (PEV)in Electric -f PlugSuccessful Integration o, EPRI, Plug-In 2009 Canada, September 2009

- **Dual Metering**

Some utilities will provide a special rate for EV charging and will require the installation of a second meter specifically for this purpose. This will require additional installation time since the utility must install the meter before the EVSE is available for use. The use of a “revenue grade” meter in the EVSE and a communications path to allow the utility control may obviate the need for the second meter.

- **Demand Response**

Demand response is a voluntary program that allows a utility to send out a signal to customers (typically large commercial customers) to cut back on loads during times the utility is experiencing a high peak on their utility grid. The customers are compensated when they participate in these programs to make it worth their while. EVs may participate in such programs in the future as deployment of smart meters become more prevalent. Utilities may enter into contracts with EV owners to allow the utility to maintain more control on EV charging.

- **Real-Time Pricing (RTP)**

RTP is a concept that could be implemented in the future for electric vehicles whereby pricing signals are sent to a customer through a number of communication mediums that allows the customer to charge their EV during the most cost effective period. For example, the EVSE installed in the EV owners garage could be pre-programmed to make sure the car is fully charged by 6am, at the least cost possible. RTP signals from the utility would allow this to occur without customer intervention. In order to implement RTP smart meters would need to be in place at the charging location and the technology built-in to the EVSE. These programs are under development at the time of this writing.

- **Vehicle-to-Grid (V2G)**

V2G is a concept that allows the energy storage in electric vehicles to be used to support the electrical grid during peak electrical loads, in times of emergency such as grid voltage support or based on pricing economics. V2G could also support vehicle-to-home whereby the energy stored in the vehicle battery could supplement the home electrical requirements. V2G requires that the on-board vehicle charger be bi-directional (energy can flow both directions) and that the EVSE at the premise also be bi-directional and accommodating of all the utility requirements related to flowing energy back into the electrical grid. Although there are various development efforts in V2G, this concept for on-road EVs is likely several years away from implementation in any commercial sense.

B. Interconnection Requirements

Although vehicle-to-grid (V2G) connections may be in the future for most applications, some infrastructure will incorporate EVSE with solar parking structures or other renewable resources. Because these systems will connect to the local grid, it will be necessary to contact the local utility to determine if there are any interconnection requirements. These requirements are in place to protect personnel and property while feeding electricity back into the utility grid. Most utility requirements are typically already in place for solar photovoltaic and wind systems that are grid-tied to the utility.

C. Commercial Electrical Supply/Metering

There are typically two scenarios for connection to a commercial electrical supply. The first is utilizing the existing main service entrance section (SES) or an otherwise adequate supply panel at the commercial establishment, and the second is to obtain a new service drop from the local electric utility.

The decision on which approach to take depends on a number of factors including the ability to obtain permission from the property owner and/or tenant of the commercial business, and the location of the existing SES or adequate electrical supply from the proposed electric vehicle charge station site. If permission is granted from the property owner and/or tenant (as required), then a fairly simple analysis can be performed to compare the cost of utilizing an existing supply or a new service drop to determine the best approach.

A new utility service drop will typically require a new customer account be setup, which may include a credit evaluation of the entity applying for the meter, and a monthly meter charge in addition to the energy and demand charges. In addition, the local utility may require an analysis of the anticipated energy consumption in order to justify covering the cost of the new service drop.

ATTACHMENT TWO

MAG BUILDING CODES COMMITTEE MEMBERSHIP AS OF 5/10/2010

Name	Representing	Telephone #	Fax #	E-mail Address
Steven Hether (Chair)	Mesa	480-644-2039	480-644-4900	steve.hether@mesaaz.gov
Dennis Dixon (T)	Apache Junction	480-671-5156	480-982-7010	dennisdixion@ajcity.net
Ken Sowers (Vice Chair)	Avondale	623-333-4025	623-333-0401	ksowers@avondale.org
Phil Marcotte	Buckeye	623-349-6200	623-349-6221	pmarcotte@buckeyeaz.gov
Mike Tibbett	Carefree	480-488-1471	480 488-3845	mike@carefree.org
Mike Baxley	Cave Creek	480-488-6637	480-488-2263	mbaxley@cavecreek.org
Alex Banachowski	Chandler	480-782-3109	480-782-3110	alex.banachowski@chandlerazgov
Mary Dickson	El Mirage	623-876-2932	623-876-4607	mdickson@cityofelmirage.org
Peter Johnson	Fountain Hills	480-816-5110	480-837-3145	pjohnson@fh.az.gov
JoRene DeVeau	Gila River IC	520-562-3585	520-562-1033	jorene.deveau@gric.nsn.us
Ray Patten	Gilbert	480-503-6820	480-497-4923	ray.patten@gilbertaz.gov
Bryan Woodcox	Glendale	623-930-3139	623-915-2695	bwoodcox@glendaleaz.com
Ed Kulik	Goodyear	623-932-3910	623-932-1177	ekulik@goodyearaz.gov
Chuck Ransom	Litchfield Park	623-935-4356	623-935-5427	building@litchfield-park.org
Tom Ewers	Maricopa County	602-506-7145	602-506-3282	tomewers@mail.maricopa.gov
Bob Lee	Paradise Valley	480-348-3631	480-951-3751	rlee@paradisevalleyaz.gov
Dennis Marks	Peoria	623-773-7232	623-773-7233	dennis.marks@peoriaaz.gov
Tom Wandrie	Phoenix	602-495-7346	602-495-5430	tom.wandrie@phoenix.gov
Dean Wise	Queen Creek	480-358-3009	480-358-3002	dean.wise@queencreek.org
Michael Clack	Scottsdale	480-312-7629	480-312-9029	mclack@scottsdaleaz.gov
VACANT	Surprise			
Michael Williams	Tempe	480 350-8670	480 350-8677	michael_williams@tempe.gov
Mario Rochin	Tolleson	623-936-7111	623-936-7117	mrochin@tollesonaz.org
Rick DeStefano	Wickenburg	928-684-5451 x513	602-506-1580	rdestefano@ci.wickenburg.az.us
John Stigsell	Youngtown	623-933-8286	623-933-5951	jstigsell@youngtownaz.org
Bridget Jones (P)	Home Builders Assn.	602-274-6545	480-556-5478	jonesb@hbaca.org
Heidi Bickart	MAG	602-254-6300	602-452-5098	hbickart@mag.maricopa.gov

(T) Temporary
(P) Proxy

Survey of Code Adoption

Jurisdiction	Building	Mechanical	Plumbing	Electric	Residential	Fire	Energy	Existing Building Code	Fuel	Performance	Notes	URL	Anticipated Adopted Date by Council	Anticipated Effective Date for 2009 ICC Codes (Month and Year)
Avondale	2006 IBC	2006 IMC	2006 IPC	2005 NEC	2006 IRC	2003 IFC	2006 IECC		2006 IFGC		2006 Fuel Gas Code. Codes adopted 2/20/07, effective 7/1/07	Avondale	January/February 2010	July 2010
Buckeye	2006 IBC	2006 IMC	2006 IPC	2005 NEC	2006 IRC	2006 IFC	2006 IECC				2006 Fuel Gas Code. Codes adopted 2/20/07, effective 7/1/07	Buckeye		No plans to adopt 2009 codes.
Carefree	2003 IBC	2003 IMC	1994 UPC	2002 NEC	2003 IRC	2003 IFC					Codes became effective July 1, 2006	Carefree		Not going to adopt, staying with 2003.
Cave Creek	2003 IBC	2003 IMC	1994 UPC	2002 NEC	2003 IRC	2003 IFC	2003 IECC					Cave Creek	January/February 2010	July 2010
Chandler	2006 IBC	2006 IMC	2006 IPC	2005 NEC	2006 IRC	2006 IFC	2006 IECC		2006 IFGC		Effective September 28, 2008	Chandler	January/February 2011	Early 2011
El Mirage	2006 IBC	2006 IMC	2006 IPC	2005 NEC	2006 IRC	2006 IFC	2006 IECC	2006 IEBC	2006 IFGC		1997 ICC/ANSI Accessibility Code with Arizonans with Disabilities Act. New codes will go into effect Jan. 1, 2008 with city amendments.	El Mirage	January/February 2010	July 2010
Fountain Hills	2006 IBC	2006 IMC	2006 IPC	2005 NEC	2006 IRC	2006 IFC	2006 IECC				Codes adopted April 17, 2008 with town amendments available on Web site.	Fountain Hills		No plans to adopt 2009 codes.
Gila Bend	1997 UBC	1997 UMC	1997 UPC	1999 NEC	1997 UBC	1997 UFC								Just adopted 2006 IBC.
Gila River	2006 IBC	2006 IMC	2006 IPC	2005 NEC	2006 IRC	2003 IFC	None							
Gilbert	2006 IBC	2006 IMC	2006 IPC	2005 NEC	2006 IRC	2006 IFC	2006 IECC		2006 IFGC		ADAAG per state requirements	Gilbert	January/February 2011	July 2011
Glendale	2006 IBC	2006 IMC	2006 UPC	2005 NEC	2006 IRC	2003 IFC		2006 IEBC			With city amendments. Effective Sept. 1, 2007	Glendale	January/February 2010	July 2010
Goodyear	2006 IBC	2006 IMC	1994 UPC	2005 NEC	2006 IRC	2006 IFC	2006 Residential				Adopted 5-14-2007.	Goodyear		
Guadalupe	1997 UBC	1997 UMC	1994 UPC	1999 NEC	1997 UBC	1997 UFC								Need phone #
Litchfield Park	2006 IBC	2006 IMC	2006 IPC	2005 NEC	2006 IRC	2003 IFC (waiting on Avondale)	2006 IECC		2006 IFGC		Codes effective July 1, 2008	Litchfield Park		
Maricopa County	2006 IBC	2006 IMC	2006 IPC (effective Jan. 19, 2008)	2005 NEC	2006 IRC						WITH MAG/AZBO AMENDMENTS adopted September 5, 2007.	Maricopa County	July 2010 with a grace period to October 2010	2009 I codes (and 2008 NEC) effective date of 1-1-10, but with a grace period to 4-1-10.
Mesa	2006 IBC	2006 IMC	2006 IPC	2005 NEC	2006 IRC	2006 IFC		2006 IEBC	2006 IFGC		2006 IBC, IMC, IPC, IRC and 2005 NEC will be effective 2/4/07. Did not adopt the energy code.	Mesa		Considering adopting the 2009 IECC.
Paradise Valley	2006 IBC	2006 IMC	2006 IPC	2005 NEC	2006 IRC	2006 IFC	2006 IECC		2006 IFGC		Effective July 1, 2007	Paradise Valley	January/February 2011	July 2011. Considering adopting the 2009 IECC.
Peoria	2006 IBC	2006 IMC	2006 IPC	2005 NEC	2006 IRC	2006 IFC			2006 IFGC			Peoria	January/February 2010	July 2010
Phoenix	2006 IBC	2006 IMC	2006 UPC	2008 NEC	2006 IRC	2006 IFC w/ Amendments	2006 IECC	2006 IEBC	2006 IFGC	2006 ICCP for Buildings and Facilities	Effective July 2, 2008	Phoenix	No date	No date
Queen Creek	2006 IBC	2006 IMC	2006 UPC	2005 NEC	2006 IRC	2006 IFC	2006 IECC	2006 IEBC			Effective Aug. 7, 2008	Queen Creek		No plans to adopt 2009 codes.
Salt River	2003 IBC	2003 IMC	2003 UPC	2002 NEC	2003 IRC	2003 IFC	None							Need phone #
Scottsdale	2006 IBC	2006 IMC	2006 IPC	2005 NEC	2006 IRC	2006 IFC	2006 IECC				Effective Sep. 1, 2007, except IPC June 30, 2008	Scottsdale	January/February 2010	July 2010
Surprise	2006 IBC	2006 IMC	2006 IPC	2006 IEC w/ 2005 NEC	2006 IRC	2006 IFC	2006 IECC	2006 IEBC	2006 IFGC		Adopted June 28, 2007	Surprise	January 2010	July 2010
Tempe	2006 IBC	2006 IMC	2006 IPC	2008 NEC	2006 IRC	2006 IFC	2006 IECC	2006 IEBC	2006 IFGC		Effective 1/12/2009	Tempe		
Tolleson	2006 IBC	2006 IMC	2006 IPC	2005 NEC w/ 2006 IEC	2006 IRC	2006 IFC	2006 IECC				2006 Fuel Gas Code, 2006 IPMC, 2006 NEAC. Codes adopted 2/20/07, effective 7/1/07.	Tolleson 2006 IFC Amend.	January/February 2010	July 2010
Wickenburg	2006 IBC	2006 IMC	2006 IPC	2005 NEC	2006 IRC	2003 IFC	2006 IECC	2006 IEBC	2006 IFGC			Wickenburg		No plans to adopt 2009 codes.
Youngtown	2006 IBC	2006 IMC	2006 IPC	2005 NEC	2006 IRC	2006 IFC			2006 IFGC			Youngtown	May 2010	July 2010

Last updated February 2010
Source: MAG Building Codes Committee Members
This is intended to be used as a guide, for the selected codes, as to what other agencies have adopted or intend to adopt.

MARICOPA ASSOCIATION of GOVERNMENTS
302 North 1st Avenue, Suite 300 ▲ Phoenix, Arizona 85003
Phone (602) 254-6300 ▲ FAX (602) 254-6490

May 12, 2010

TO: Members of the Building Codes Committee

FROM: Jami Garrison

SUBJECT: CHAIR AND VICE CHAIR APPOINTMENTS

On July 22, 2009, the MAG Regional Council approved the MAG Committee Operating Policies and Procedures. Officer positions for technical committees have one-year terms, with possible reappointment to serve up to one additional term, by consent of the respective committee. According to these policies and procedures, the chair and vice chair appointments of the Building Codes Committee are due to expire on June 30, 2010.

Technical committees may choose to do one of the following: 1) recommend reappointment of the current chair and vice chair to serve a second one-year term, or 2) have a new chair and vice chair appointed by the Regional Council Executive Committee. Officer re-appointments will require action by the Building Codes Committee at its May 19, 2010 meeting. Committees that choose to have the Executive Committee appoint a new chair and vice chair will require letters of interest from MAG member agencies. The letters of interest are requested to be submitted by Tuesday, June 1, 2010 to Councilwoman Peggy Neely, MAG Chair, at the MAG Office located at 302 N. 1st Avenue, Suite 300, Phoenix, Arizona 85003. The appointments will be made at the June 21, 2010 Executive Committee meeting.

If you have any question, please contact Jami Garrison at the MAG Office at (602) 254-6300 or jgarrison@mag.maricopa.gov .

cc: MAG Management Committee
MAG Intergovernmental Representatives

ECOtality North America
EV Project
EV Charging Infrastructure Deployment Guidelines

MAY 19, 2010

History

- **April 16, 2009**

  MAG, ECOtality and Nissan North America announced a zero emissions partnership that will help facilitate the introduction of electric vehicles (EVs) in the MAG region.

- **May 20, 2009**

  MAG staff provided an update on the zero emission partnership initiative to the MAG Building Codes Committee.

History

- <u>August 5, 2000</u>

  ECOtality North America (formerly eTec), a subsidiary of ECOtality, Inc., a leader in clean electric transportation and storage technologies, was selected by the U.S. Department of Energy for a grant of approximately $99.8 million.

  – Largest deployment of EVs and charging infrastructure to date

  – Matched by application's project participants to provide a total of approximately $200 million

Electric Vehicle Infrastructure Initiative

- The eTec initiative proposes to deploy charging infrastructure in major population areas that include Phoenix (AZ), Tucson (AZ), San Diego (CA), Portland (OR), Eugene (OR), Salem (OR), Corvallis (OR), Seattle (WA), Nashville (TN), Knoxville (TN), and Chattanooga (TN).

Arizona

- Phoenix (MAG region)
- Tucson (PAG region)
- I-10 Corridor
  - Strategic fast-charge stations along Interstate-10 to create the first true implementation of an EV Corridor in North America

EV Charging Infrastructure Deployment Guidelines

- Intended to create a common knowledge base of EV requirements for stakeholders involved in the implementation of EV charging infrastructure.
- Provides the necessary background information for understanding EV requirements and the related codes, laws and standards for this effort.
- Provides the foundation upon which the EV Micro-Climate© program is implemented to guide the installation of infrastructure to support and encourage the adoption of electric vehicles in the MAG region.

EV Charging Infrastructure Deployment Guidelines

CONTENTS

1. Electric Vehicle Technology
2. Charging Requirements
3. Charging Scenarios
4. Additional Charging Considerations
5. Codes and Standards
6. Utility Integration

NEXT STEPS
EV Micro-Climate Plan & Roadmap
July 2010

- Develop EV Micro-Climates© Plan
  - Project Boundaries
  - Incorporates Local Demographic and Transportation Studies
  - Survey of existing EVSE
  - 10-Year EV Infrastructure Feedback
    - Incorporates Stakeholder Feedback
- Develop EV Micro-Climate© Roadmap (Locations)
  - Publicly Available Charging Station Installation Detailed Plan
    - Commercial & Public
  - Fast Charger Installation Detailed Plan
  - Home Base Charging Station Installation Detailed Plan
    - Residential/Fleet

THANK YOU MAG!!!

AND BUILDING CODES COMMITTEE!