September 24, 2008

TO: Members of the MAG Specifications and Details Committee

FROM: Robert Herz, Maricopa County DOT, Chairman

SUBJECT: MEETING NOTIFICATION AND TRANSMITTAL OF AGENDA

Wednesday, October 8, 2008 at 1:30 p.m.
MAG Office, Second Floor, Cholla Room
302 North First Avenue, Phoenix

The meeting of the MAG Specifications and Details Committee will be held at the place and time indicated above. The agenda for the meeting is provided below. **Please park in the garage under the building. Bring your ticket to the meeting, parking will be validated. For those using transit, the Regional Public Transportation Authority will provide transit tickets for your trip. For those using bicycles, please lock your bicycle in the bike rack in the garage.** Please call me at (602) 506-4760 if you have questions about the upcoming meeting.

Pursuant to Title II of the Americans with Disabilities Act (ADA), MAG does not discriminate on the basis of disability in admissions to or participation in its public meetings. Persons with a disability may request a reasonable accommodation, such as a sign language interpreter, by contacting Gordon Tyus at the MAG Office at (602) 254-6300. Requests should be made as early as possible to allow time to arrange the accommodation.

It is requested (not required) that written comments be prepared in advance for distribution at the meeting.

AGENDA

ITEM	COMMITTEE ACTION REQUESTED
1. Call to Order	1. No action required.
2. Approval of September 3, 2008 Meeting Minutes	2. Corrections and approval of September 3, 2008 minutes.
3. 2007 & 2008 Cases	3. Review and vote on cases as previously requested.
4. General Discussion	4. Corrugated Steel Pipe Assoc. request for Advisory Membership. Open general discussion.
5. Adjournment	5. No action required.

MEETING MINUTES FROM THE
MARICOPA ASSOCIATION OF GOVERNMENTS
STANDARD SPECIFICATIONS AND DETAILS COMMITTEE

September 3, 2008

Maricopa Association of Governments Office, Cholla Room
302 North First Avenue
Phoenix, Arizona

AGENCY MEMBERS

Jim Badowich, Avondale
Steven Borst, Buckeye
Warren White, Chandler
* Dennis Teller, El Mirage
* Kelli Kurtz, Gilbert
\+ Tom Kaczmarowski, Glendale
Troy Tobiasson, Goodyear
Bob Herz, MCDOT
Gordon Haws, Mesa
Jesse Gonzalez, Peoria
Jeff Van Skike, Phoenix (St. Trans.)
Jami Erickson, Phoenix (Water)
\+ Mark Palichuk, Queen Creek
Rodney Ramos, Scottsdale
Loren Kelley, Surprise
James Bond, Tempe

ADVISORY MEMBERS

John Ashley, ACA
Jeff Benedict, AGC
Brian Gallimore, AGC
Peter Kandaris, SRP, Vice Chairman
James Carusone, ARPA
* Adrian Green, ARPA
Paul R. Nebeker, Independent
* William Ast, NUCA
Dale Phelan, NUCA

MAG ADMINISTRATIVE STAFF

Gordon Tyus

* Members not attending or represented by proxy.
\+ Member participating via teleconference

GUESTS/VISITORS

Doug Berg, Contech Construction Products, Inc.
Arturo Chavarria, Hansen Pipe and Precast
Dennis Shoffner, StrongGo, LLC (Tekway Dome Tiles)
John Wayne Gonzales, City of Phoenix
John Shi, MCDOT

1. Call to Order

Chairman, Bob Herz, called the meeting to order at 1:34 p.m.

2. Approval of Minutes

The members reviewed the August 6, 2008 meeting minutes. Jesse Gonzalez introduced a motion to accept the minutes as written. Jeff Van Skike seconded the motion. A voice vote of all ayes and no nays was recorded.

3. 2007 Cases (old cases)

a. **Case 07-02 – Revisions to Asphalt Concrete, Sections 321 and 710**: Major re-writes of Asphalt Concrete placement and materials Sections 321 and 710 as proposed by the Asphalt Paving Technical Committee (APTC). Jeff Benedict provided revisions that included resolution to all comments from the technical committee meeting held August 14, 2008. It was noted that sections referencing the new asphalt concrete coring method need to be written in standard MAG section format. The committee discussed possible modifications in the penalty schedules to allow for future changes in material prices. Members generally agreed that penalty costs per ton are more practical to manage since agencies do not use consistent units for pavement payment, but tonnage is always measured. Gordon Haws questioned the elimination of the restricted zone for aggregates. James Carusone said that the restricted zone has been found to be a failed concept and has been abandoned on federal and state levels. He proposed meeting with City of Mesa representatives to discuss in more detail. Since the remaining changes are minor, members are requested to be prepared to vote on this case at the next meeting.

b. **Case 07-03A – PVC Catch Basins, Proposed New Details 535-2, 535-3, 537-2 & 539-2. Case 07-03B – Inlet Structures, Proposed New Details 542-1 through 4 & 543-1 through 5**: Details to allow the use of PVC catch basins and inlet structures. Dale Phelan gave a slide presentation summarizing the case. Bob Herz noted that a number of earlier comments by Maricopa County (such as base plate fabrication details and locating frame holes) have not yet been incorporated into the details. The committee discussed the possibility of limiting the use of PVC catch basins to within residential streets, including PVC material additives needed to reduce light degradation, and the overall applicability of PVC catch basins within the right-of-way. Dale Phelan stated that he would give a presentation to any individual agency that wanted more information and would prepare changes for a vote at the next meeting. Members are requested to be prepared to vote on this case at the next meeting.

4. 2008 Cases (new cases)

a. **Case 08-03 – New Section 325, Asphalt – Rubber Concrete Overlay, Gap Graded**: Material and construction requirements for gap-graded asphalt-rubber concrete used as an asphalt pavement. Gordon Haws inquired about penalties for substandard mixes or placement. Bob Herz noted that paragraph 325.4.2 in the new standard references MAG 321 and 710 as corrections for deficiencies. Bob Herz moved to vote on the case as shown in the version dated 7/21/08. Jesse Gonzalez seconded the motion. A vote of 12 yes, 0 no, 0 abstention and 3 not present was recorded.

b. **Case 08-05 – Revisions to Safety Post Detail 140**: This case was approved during the August 6th meeting. During review of the detail, Bob Herz found that notes 2 and 5 are identical and recommended that only one remain for the version to be placed in next year's standards. The committee agreed. No vote was deemed necessary since this action did not change the case.

c. **Case 08-06 – Modification to Storm Drain Construction, Section 618.3**: Additions to require video inspection before final paving is allowed. Jeff Van Skike handed out revisions that included all previous comments. Bob Herz recommended changing the word "videotaping" in the title of Section 618.5 to "video inspection" and changing the word "entire" in the first sentence of this section to "new". There was a general discussion on the meaning of an annotated video. Jeff Van Skike moved to vote on the case as modified during the discussion. Gordon Haws seconded the motion. A vote of 12 yes, 0 no, 0 abstention and 3 not present was recorded.

d. **Case 08-07 – Modification to Measurements and Payment, Section 109**: Revisions to better define compensation with change orders. The committee had no discussion on this case. Gordon Haws moved to vote on the case as shown in this month's packet. Jesse Gonzalez seconded the motion. A vote of 12 yes, 0 no, 0 abstention and 3 not present was recorded.

e. **Case 08-08 – Modification to Subgrade and Trench Compaction, Sections 301.3 and 601.4**: Revisions to modify subgrade compaction requirements and include tolerances for optimum moisture. Gordon Haws provided a revision that includes all previous comments. Bob Herz recommended changing a generic standard detail reference in 301.3 to a specific reference to Standard Detail 190. Gordon Haws moved to vote on the case as modified during the discussion. Troy Tobiasson seconded the motion. A vote of 11 yes, 0 no, 0 abstention and 4 not present was recorded.

f. **Case 08-10 – Modification to Trench Backfill and Pavement Replacement, Detail 200, Section 336 and Section 601**: Revisions to eliminate numerous agency trench backfill and pavement replacement supplemental details by combining the most common practices. Peter Kandaris requested carrying this case over to next year since many agencies were still working on comments. The committee agreed to this action.

g. **Case 08-11 – Revisions to Driveway Entrance Detail 250 and Section 340**: Changes to make sidewalk installations in driveway entrances ADA compliant. A revised detail including all previous comments was provided in this month's packet. The committee had no discussion on this case. Bob Herz moved to vote on the case as shown in this month's packet. Gordon Haws seconded the motion. A vote of 12 yes, 0 no, 0 abstention and 3 not present was recorded.

h. **Case 08-12 – New Section 331, Microsealing, and Section 714, Microsurfacing Materials**: New sections for pavement microsurfacing materials and placement. Jeff Van Skike provided revisions based on previous comments and reviewed the changes. The committee requested that the description of the bituminous material either be different

than emulsions defined in MAG 713 or use the material requirements of MAG 713 in lieu of the new table in 714-2. The committee also recommended comparing similarities in Table 714-1 with slurry seal aggregates in MAG 715, changing the description of mineral fillers to include Type II cement, modifying the wording in 331.3.1 to be consistent with 331.4.2.2, and deleting warranty requirements since these are covered in general MAG sections. Jeff Van Skike will prepare revisions based on these comments. Members are requested to be prepared to vote on this case at the next meeting.

5. General Discussion:

John Ashley announced that the concrete modernization subcommittee will next meet at 1:00 pm on Wednesday September 10th at the ARPA offices (916 W. Adams Street, Phoenix). An updated draft of some recent changes proposed by the subcommittee was handed out.

Jim Badowich informally polled other agencies on how they were handling county requests for construction approvals (AOC's).

Jeff Benedict said that AGC has prepared a presentation on hot mix pavement design using recycled asphalt. The committee requested that he arrange to have this presentation shown at the October meeting.

Bob Herz introduced Doug Berg of Contech Construction Products, Inc. Doug stated that he would be submitting a request to become an advisory member to the committee representing the Western Corrugated Metal Pipe Association. After receipt of an association request, the committee will vote on associate membership.

6. Adjournment:

The meeting was adjourned at 3:35 p.m.

2008 PROPOSED REVISIONS TO MAG SPECIFICATIONS AND DETAILS

(Updated information can be found on the website: http://www.mag.maricopa.gov/detail.cms?item=8497)

CASE	DESCRIPTION	PROPOSED BY	MEMBER	SUBMITTAL DATE Last Revision	VOTE DATE	VOTE	
07-02	Revision/ Re-Write Section 321 & Section 710	AGC ARPA	Jeff Benedict (Don Green)	2/07/2007 9/03/2008	Proposed vote 10/08/2008	0 0 0	Yes No Abstain
07-03 A	PVC Catch Basins - New Details 535-2, 535-3, 537-2, 539-2 and Section 601.4.10	NUCA	Dale Phelan	2/07/2007 8/06/2008	Proposed vote 10/08/2008	0 0 0	Yes No Abstain
07-03 B	PVC Inlet Structures - New Details 542-1, 542-2, 543-1, 543-2, 543-3 and Section 601.4.10	NUCA	Dale Phelan	2/07/2007 8/06/2008	Proposed vote 10/08/2008	0 0 0	Yes No Abstain
07-08	~~Revision to Section 615 Sewer Line Construction – Clarify tolerances for pipe versus trench bottom.~~	~~Queen Creek~~	~~Mark Palichuk (Gerald Wright)~~	~~5/02/2007~~ ~~8/01/2007~~	Case Withdrawn 7/02/2008	0 0 0	Yes No Abstain
07-11	~~Revision to Detail 370, Vertical Realignment of Water Mains~~	~~Peoria~~	~~Jesse Gonzalez~~	~~6/06/2007~~	Case Withdrawn 7/02/2008	0 0 0	Yes No Abstain
07-12	~~Revision to Detail 404-2, Water & Sanitary Sewer Separation/Protection~~	~~Peoria~~	~~Jesse Gonzalez~~	~~6/06/2007~~	Case Withdrawn 7/02/2008	0 0 0	Yes No Abstain
08-01	Revision to Section 210 Borrow Excavation	MCDOT	Bob Herz	1/02/2008 6/05/2008	Approved 7/02/2008	11 0 0	Yes No Abstain
08-02	New Section 317, Asphalt Milling	MCDOT	Bob Herz	1/02/2008 5/08/2008	Approved 7/02/2008	11 0 0	Yes No Abstain
08-03	New Section 325, Asphalt – Rubber Concrete Overlay, Gap Graded	MCDOT	Bob Herz	1/02/2008 7/21/2008	Approved 9/03/2008	12 0 0	Yes No Abstain
08-04	~~New Details 180-1 and 180-2, Portable Water Tank Fill Pipe and Backflow Prevent Details~~	~~Chandler~~	~~Warren White (David Fern)~~	~~1/02/2008~~	Case Withdrawn 6/04/2008	0 0 0	Yes No Abstain

* Case was approved with verbal modifications at time of voting.

2008 PROPOSED REVISIONS TO MAG SPECIFICATIONS AND DETAILS

(Updated information can be found on the website: http://www.mag.maricopa.gov/detail.cms?item=8497)

CASE	DESCRIPTION	PROPOSED BY	MEMBER	SUBMITTAL DATE Last Revision	VOTE DATE	VOTE	
08-05	Revisions to Safety Post Detail 140 and add Detail 141	Chandler	Warren White (David Fern)	1/02/2008 7/22/2008	Approved 8/06/2008	12 0 0	Yes No Abstain
08-06	Insert new section 618.5 Video Inspection of New Mainline Storm Drains.	Phoenix	Jeff Van Skike	2/06/2008 7/02/2008	Approved 9/03/2008	12 0 0	Yes No Abstain
08-07	Revisions to Section 109 Measurements and Payments	Mesa	Gordon Haws	2/06/2008 7/30/2008	Approved 9/03/2008	12 0 0	Yes No Abstain
08-08	Revisions to Section 301 Subgrade Preparation and Section 601.4 Foundation, Bedding, Backfilling and Compaction concerning optimum moisture and percent compaction.	Mesa	Gordon Haws	2/06/2008 8/15/2008	Approved 9/03/2008	11 0 0	Yes No Abstain
08-09	~~Revisions to Section 625.3.1 Manholes~~	~~Mesa~~	~~Gordon Haws~~	~~2/06/2008~~ ~~4/02/2008~~	Case Withdrawn 4/02/2008	0 0 0	Yes No Abstain
08-10	Detail 200 and Sections 336 and 601 – Trench backfill and pavement Replacement	SRP	Peter Kandaris	2/06/2008 4/02/2008	Carry Over To 2009	0 0 0	Yes No Abstain
08-11	Revisions to Detail 250 DRIVEWAY ENTRANCES and specification Section 340	MCDOT	Bob Herz	3/05/2008 8/06/2008	Approved 9/03/2008	12 0 0	Yes No Abstain
08-12	New Section 331, Microsurfacing New Section 714, Microsurfacing Materials	Phoenix	Jeff Van Skike	3/05/2008 9/02/2008	Proposed vote 10/08/2008	0 0 0	Yes No Abstain
08-13	* Revision to Section 345 Adjusting Frames, Covers, Valve Boxes and Water Meter Boxes	Phoenix	Jeff Van Skike	3/05/2008 7/02/2008	Approved 7/02/2008	11 0 0	Yes No Abstain

* Case was approved with verbal modifications at time of voting.

2008 PROPOSED REVISIONS TO MAG SPECIFICATIONS AND DETAILS

(Updated information can be found on the website: http://www.mag.maricopa.gov/detail.cms?item=8497)

CASE	DESCRIPTION	PROPOSED BY	MEMBER	SUBMITTAL DATE Last Revision	VOTE DATE	VOTE	
08-14	Revision to Detail 212 UTILITY POTHOLE REPAIR	Phoenix	Jeff Van Skike	4/02/2008 7/02/2008	Approved 8/06/2008	12 0 0	Yes No Abstain
08-15	Revision to Detail 535 CATCH BASIN TYPE 'F' – Grate modification	MCDOT	Bob Herz	6/04/2008	Approved 7/02/2008	10 1 0	Yes No Abstain
08-16	Revision to Detail 552 CONCRETE CUT-OFF WALLS – Revise concrete pavement note	MCDOT	Bob Herz	6/04/2008 6/05/2008	Approved 8/06/2008	11 0 0	Yes No Abstain
08-17	Revision to Detail 210 RESIDENTIAL SPEED HUMP – Delete conflicting note.	MCDOT	Bob Herz	6/04/2008 7/21/2008	Approved 8/06/2008	10 0 1	Yes No Abstain

* Case was approved with verbal modifications at time of voting.

SECTION 321

Updated 09-03-08

ASPHALT CONCRETE PAVEMENT

321.1 DESCRIPTION:

- This section is to provide specifications for furnishing all materials, mixing at a plant, hauling and placing a mixture of aggregate materials, mineral admixture and asphalt binder to form a pavement course for placement upon a previously prepared base or sub base.

321.2 MATERIALS AND MANUFACTURE:

The materials shall conform to Section 710 for the type specified. The specific required mix type shall be called out in the contract documents or as directed by the Engineer.

321.3 WEATHER AND MOISTURE CONDITIONS:

Asphalt concrete shall be placed only when the surface is dry, and when the atmospheric temperature in the shade is 40 degrees F. (50 degrees F for Asphalt Concrete lift less than 2 inch thick) or above. No asphalt concrete shall be placed when the weather is foggy or rainy, or when the base or sub base on which the material is to be placed is unstable. Asphalt concrete shall be placed only when the Engineer determines that weather conditions are suitable.

321.4 APPLICATION OF TACK COAT:

A tack coat shall be applied to all existing and to each new course of asphalt concrete prior to the placing of a succeeding lift of asphalt concrete. The tack coat may be deleted when a succeeding layer of asphalt concrete is being applied over a freshly laid course that has been subjected to very little traffic when approved by the Engineer.

The application of the tack coat shall comply with Section 329. The grade of emulsified asphalt shall be SS-1 h or CSS-1h as specified in Section 713.

The same material that is specified above for the tack coat shall be applied to the vertical surfaces of existing pavements, curbs, and gutters, against which asphalt concrete is to be placed.

The surface to be covered may require repair or patching as directed by the Engineer. This shall be addressed in the project specifications prior to the bidding of the project.

321.5 MIX DESIGN

The mix design shall be submitted to the Engineer at least five working days prior to the start of asphalt concrete production. Mix designs provided by the agency may be utilized on projects at the Engineer's discretion. The Engineer will review and approve the mix design to assure it contains all of the required information as outlined in Section 710.3.1. The target values for gradations, binder contents, and air voids will be established as the accepted Job Mix Formula (JMF) based upon the mix design. Mix designs not containing all of the information will be returned within five working days of receipt of all mix design information, for action and resubmission by the contractor.

Once the mix design has been approved by the agency and the mixing plant selected, the Contractor and/or his supplier shall not change plants nor utilize additional mixing plants without prior approval of the Engineer.

If the contractor elects to change its source of material, the contractor shall furnish the Engineer with a new mix design, which meets the requirements of Section 710, as amended by the Project Specifications.

The contractor may make self-directed target changes to the approved mix design within the limits shown below. Requests for self-directed target changes shall be made in writing and acknowledged by the Engineer prior to the start of production of a lot and will remain in effect until such time as any additional changes are implemented.

The self-directed target changes must meet the contract requirements for mix design criteria and gradation limits.

TABLE 321-1 ALLOWABLE SELF_DIRECTED TARGET CHANGES	
MEASURED CHARACTERISICS	ALLOWABLE SELF-DIRECTED TARGET CHANGES
Gradation (Sieve Size)	
3/8 inch	± 2% from mix design target value
No 8	± 2% from mix design target value
No 30	± 1% from mix design target value
No 200	None
Binder Content	± 0.2% from mix design target value
Effective Air Voids	None

The contractor may propose target changes, other than self-directed changes, to the approved mix design for the approval of the Engineer. The Engineer will determine if the proposed target change will result in mix production that that meets the contract requirements for mix design criteria and gradation limits. The target changes will not be retroactive for the purpose of acceptance.

321.6 MIX PRODUCTION:

All materials shall be proportioned by weight in a hot mix asphalt plant in the proportions required by the mix design to provide a homogeneous and workable mass. Each hot mix asphalt plant shall be inspected in accordance with the provisions contained in the 'Hot Mix Asphalt Production Facilities' by the Arizona Rock Products Association and shall have a current inspection certificate. All measuring devices shall be calibrated at least annually by a technician licensed by the Arizona Bureau of Weights & Measures. Mixing plants shall conform to the requirements of AASHTO M 156, except as modified herein. .

In drum mix plants the mineral admixture shall be added and thoroughly mixed with the mineral aggregate by means of a mechanical mixing device prior to the mineral aggregate and mineral admixture entering the dryer. The moisture content of the combined mineral aggregate shall be a minimum of three percent by weight of the aggregate during the mixing process.

For drum-mix plants, the mineral admixture shall be weighed across a weigh belt, or other approved alternative weighing system, with a weight totalizer prior to entry into the mechanical mixing device. The mechanical mixing device shall be a pugmill type mixer that is in good working condition. The rate of the aggregate feed shall not exceed the mixing device's capacity in ton per hour. The mixer shall be constructed to minimize the loss of mineral admixture and shall be located in the aggregate delivery system at a location where the mixed material can be readily inspected. The mixing device shall be capable of effective mixing in the full range of the asphalt concrete production rates.

The hot plant and equipment shall be constructed and operated to prevent loss of mineral admixture through the dust collection system of the plant.

A positive signal system shall be provided and utilized during production whereby the mixing shall automatically be stopped if the mineral admixture is not introduced into the mineral aggregate. The plant will not be permitted to operate unless the signal system is in good working condition.

The introduction of bituminous material shall be controlled by an automated system fully integrated with the controls or the mineral aggregate and mineral admixture. The production of the plant shall be controlled by the rate required to obtain a uniform mixture of all components. Drying and heating shall be accomplished in such a manner as to preclude the mineral admixture from becoming coated with un-spent fuel. The completed asphalt concrete may be held in storage for up to 12 hours in insulated or heated silos, providing the minimum temperature noted herein for placement and compaction is met behind the placement device. If the Engineer determines that there is an excessive amount of heat, heat loss, drain down, segregation and/or oxidation of the mixture due to temporary storage, use of surge bins or storage bins will be discontinued

The temperature of the asphalt concrete, with unmodified binders, upon discharge from the mixer shall not exceed 335 degrees F. The discharge temperature may be increased on the recommendation of the binder supplier, when approved by the Engineer. If the asphalt concrete is discharged from the mixer into a hopper, the hopper shall be constructed so that segregation of the asphalt concrete will be minimized.

321.7 TRANSPORTATION:

Petroleum distillates or other substances that will have a detrimental effect on the asphalt concrete shall not be used as a release agent.

The beds of all transportation units shall be clean and smooth to allow the free flow of material into the paving machine's hopper.

Tarpaulins shall be furnished on all trucks and used when weather condition warrant, or if directed by the Engineer.

321.8 PLACEMENT:

321.8.1 Placing

All courses of asphalt concrete shall be placed and finished by means of a self-propelled paving machine equipped with an automatically actuated control system, except under certain conditions or at locations where the Engineer deems the use of a self-propelled paving machine impracticable.

The control system shall control the elevation of the screed at each end by controlling the elevation of one end directly and the other end indirectly either through controlling the transverse slope or alternatively when directed, by controlling the elevation of each end independently.

The control system shall be capable of working with one of the following devices:

(A) Ski or non-contact device of not less than 30 feet in length, supported throughout its entire length
(B) Taut stringline or wire set to grade
(C) Short ski or sonar sensing units from curb control
(D) Joint matching shoe

Failure of the control system to function properly shall be cause for the suspension of asphalt concrete production. In order to achieve a continuous operation, the speed of the paving machine shall be coordinated with the hot mix plant and transport units.

If the asphalt concrete is dumped from the hauling vehicles directly into the paving machine, care shall be taken to avoid jarring the machine or moving it out of alignment. No vertical load shall be exerted on the paving machine by the truck.

If asphalt concrete is dumped upon the surface being paved and subsequently loaded in the paving machine, the loading equipment shall be self-supporting and shall not exert any vertical load on the paving machine. Substantially all of the asphalt concrete shall be picked up and loaded into the paving machine.

Self-propelled paving machines shall spread the mixture without segregation or tearing, true to line, grade and crown indicated on the Project plans. Pavers shall be equipped with hoppers and augers that will distribute the mixture uniformly in front of an adjustable floating screed. The raising of the hopper wings must be minimized and the paving machine will not be operated when in an empty condition.

Screeds shall include any strike-off device operated by tamping or vibrating action which is effective, without tearing, shoving or gouging the mixture and which produces a course with a uniform texture and density for the full width being paved. Screeds shall be adjustable as to height and crown and shall be equipped with a controlled heating device for use when required. . In the case of the screed, auger extensions and vibrators shall be installed wherever the screed is extended more than one (1) foot beyond the end of the base auger or auger extension. However, when placing

material against an extremely uneven curb or edge over a short distance, the Engineer may waive the auger extensions and vibrators.

At any place not accessible to the roller, the mixture shall be thoroughly compacted with tampers to provide a uniform and smooth layer over the entire area compacted in this manner.

321.8.2 Joints:

Transverse joints, before a surface course is placed in contact with a cold transverse construction joint, the cold existing asphalt concrete shall be trimmed to a vertical face for its full depth and exposing a fresh face. After placement and finishing the new asphalt concrete, both sides of the joint shall be dense and the joint shall be smooth and tight. The surface in the area of the joint shall not deviate more than ¼ inch from a 12-foot straightedge, when tested with the straightedge placed across the joint, parallel to the centerline.

Longitudinal Joints of each course shall be staggered a minimum of 6 inches with relation to the longitudinal joint of the immediate underlying course cold transverse construction joint, the cold existing asphalt concrete shall be trimmed to a vertical face for its full depth and exposing a fresh face. The fresh face shall be tacked prior to placement of the adjacent course. After placement and finishing the new asphalt concrete, both sides of the joint shall be dense and the joint shall be smooth and tight. The surface in the area of the joint shall not deviate more than ¼ inch from a 12-foot straightedge, when tested with the straightedge placed across the joint, parallel to the centerline. The joint will be tack coated if required by the Engineer.

321.8.3 Leveling Course

A leveling course shall be used when specified, or as directed in writing by the Engineer, to bring existing pavement to a uniform grade prior to placing an overlay or other course. If a leveling course is being applied on an Asphalt surface, a tack coat shall be applied. The compaction requirements contained in Section 321.10 do not apply to leveling courses.

321.8.4 Compaction Base and Surface

It is the contractor's responsibility to perform any desired Quality Control monitoring and/or testing during compaction operations to achieve the required compaction. Asphalt concrete immediately behind the laydown machine shall be a minimum of 250 degrees F as measured from a probe type thermocouple thermometer that has been calibrated to an AASHTO standard. The probe type thermocouple thermometer shall have a current calibration sticker attached. When measuring the temperature of the mat, the probe shall be inserted at mid-depth and as horizontal as possible to the mat.

Asphalt compaction equipment shall be of sufficient size and weight to accomplish the required compaction. All compaction equipment shall be operated and maintained in accordance with the manufacturer's recommendations and the project requirements. During the rolling operation, the speed of the roller shall not exceed 3 miles per hour, unless otherwise approved by the Engineer.

Pneumatic tired compactors shall be equipped with skirt-type devices mounted around the tires so that the temperature of the tires will be maintained during the compaction process.

The Engineer will determine the acceptability of the pavement compaction in accordance with Section 321.10 – "Acceptance".

321.8.5 Smoothness:

The completed surfacing shall be thoroughly compacted, smooth and true to grade and cross-section and free from ruts, humps, depressions or irregularities. An acceptable surface shall not vary more than one-fourth (¼) inch from the lower edge of a 12-foot straightedge when the straightedge is placed parallel to the centerline of the roadway.

321.9 QUALITY CONTROL:

It is the contractor's responsibility to perform Quality Control monitoring and/or testing during asphalt concrete production to achieve the required compaction and to perform Quality Control monitoring and/ or testing during asphalt concrete production to achieve the required mix properties. The Engineer may obtain samples of any portion of any material at any point of the operations for his own use. Also, the Engineer may order the use of any drying, proportioning and mixing equipment or the handling of any material discontinued which, in his/her opinion, fails to produce a satisfactory mixture.

The asphalt concrete produced shall conform to the properties of the mix design. When the asphalt concrete does not conform to the approved mix design properties, it shall be reported to the Engineer, and corrective quality control measures shall be implemented, or production shall cease immediately at no additional cost to the contracting Agency or Engineer.

321.10 ACCEPTANCE:

321.10.1 Acceptance Criteria:

Unless otherwise specified, asphalt concrete will be divided into lots for the purpose of acceptance. A lot shall be considered to be one day's production. When the quantity of asphalt concrete placed in a day exceeds 500 tons but is less than 2000 tons, the lot shall be divided into 500 ton sublots or fraction thereof. Where the quantity of asphalt concrete placed in a day exceeds 2000 tons, the day's production will be divided into four (4) approximately equal sublots. A minimum of one sample will be obtained from each lot. Tests used to determine acceptance will be performed by the Engineer or a laboratory employed by the Engineer. In either case the laboratory shall be accredited by the AASHTO Accreditation Program (AAP), for the tests being performed. The acceptance laboratory will take representative samples of the asphalt concrete from each sublot to allow for gradation, binder content, air voids, pavement thickness and compaction of base and surface course. Each sublot will be accepted based upon the test data from the sample(s) from that sublot. All acceptance samples shall be taken using random locations or times designated by the Engineer in accordance with ASTM D 3665.

321.10.2 Gradation, Binder Content and Air Voids:

The acceptance laboratory will take a sample of the asphalt concrete in accordance with the requirements of Section 2 or 4 of Arizona Test Methods 104 or AASHTO T168 from each sublot. The minimum weight of the sample shall be 45 pounds. Asphalt binder content and gradation shall be determined in accordance with AASHTO T308 using the ignition furnace for each sublot. The acceptance laboratory is responsible for obtaining the necessary materials and performing an ignition furnace calibration as outlined in AASHTO T308 for each asphalt concrete mixture utilized on the project. The correction factor used for each test shall be clearly indicated on the report. The bulk density for Marshall Mix designs shall be tested in accordance with AASHTO T245. The bulk density for Gyratory mix designs shall be tested in accordance with AASHTO T312. The maximum theoretical density shall be tested in accordance with the requirements of AASHTO T209. Effective voids determined on the laboratory compacted specimens will be determined at a minimum of once per lot in accordance with the requirements of AASHTO T269. Should the testing for effective air voids not meet the "Full Payment" or "No Corrective Action" requirements of Table 321-5, additional testing for laboratory air voids on the remaining sublots will be performed as necessary to determine the extent of the deficiency. Acceptance testing results will be furnished to the contractor within five working days of receipt of samples by the acceptance laboratory.

The allowable deviations for acceptable production of each measured characteristic from the values established in the JMF for each sublot are as follows:

TABLE 321-3	
ACCEPTANCE LIMITS FOR ASPHALT CONCRETE	
Maximum Aggregate Size	100% passing
Nominal Maximum Aggregate Size	±7%
No. 8 Sieve to the Nominal Maximum Aggregate Size	±6%
No. 100 and No. 30 Sieves	±4%
No. 200 Sieve	±2%

If the results from a single acceptance sample fall outside of the acceptance limits in Table 321-3 a second sample shall be taken and if the second acceptance sample is also outside of the acceptance limits in Table 321-3 the Contractor shall cease production of asphalt concrete. Production shall not begin again until calibration test results verify that adjustments made to materials or proportions yield a gradation that falls within acceptance limits in table 321-3.

TABLE 321-4		
ASPHALT BINDER CONTENT CORRECTIVE ACTION FOR DEVIATIONS		
Deviation from that permitted	When the contracting agency is the owner: Payment Reduction ($ per ton of asphalt concrete)	When the contracting agency is not the owner (i.e. permits): Corrective Action
0.0 to 0.1% points	$2.00	EA (see 321.10.6)
Over 0.1 to 0.2% points	$6.00	EA (see 321.10.6)
Over 0.2% points	Removal*	Removal*

Note: Removal* refers to Section 321-10.6

TABLE 321-5		
LABORATORY VOIDS ACCEPTANCE AND PENALTIES		
Laboratory Air Voids (Measured at N_{des} or 75 blows as applicable)	When the contracting agency is the owner: Payment Reduction ($ per ton of asphalt concrete)	When the contracting agency is not the owner (i.e. permits): Corrective Action
Less than 1.5%	Removal*	Removal*
1.5-2.0%	$2.50	EA (see 321.10.6)
2.1-2.7%	$1.00	EA (see 321.10.6)
2.8-6.2%	Full Payment	No corrective action
6.3-6.9%	$1.00	EA (see 321.10.6)
7.0-8.0%	$2.50	EA (see 321.10.6)
Greater than 8.0%	Removal*	Removal*

Note: Removal* refers to Section 321-10.6

If an agency or Engineer is purchasing asphalt concrete directly from a commercial material supplier, the agency or Engineer will use Section 321.10 and specifically tables 321-3, 321-4 and 321-5 from Section 321.10 when determining the acceptance of the asphalt concrete with the material supplier.

321.10.3 Surface Testing:

If directed by the Engineer surface drainage test shall be performed. The completed surfacing shall be thoroughly compacted, smooth and true to grade and cross-section and free from ruts, humps, depressions or irregularities. An acceptable surface shall not vary more than 1/4 inch from the lower edge of a 12-foot straightedge when the straightedge is placed parallel to the centerline of the roadway. The straightedge shall be furnished by the contractor and shall be acceptable to the Engineer.

All streets shall be water tested for drainage in the presence of the Engineer or designated representative before final acceptance. Any areas not draining properly shall be corrected to the Engineer's satisfaction at the Contractor's expense. Water for this testing shall be provided and paid for by the Contractor.

When deviations in excess of the above tolerance are found, humps or depressions shall be corrected to meet the specified tolerance, or shall be cut out along neat straight lines and replaced with fresh hot mixture and thoroughly compacted to conform with and bond to the surrounding area. Materials and work necessary to correct such deviations shall be at no additional cost to the Contracting Agency.

321.10.4 Asphalt Pavement Thickness:

Asphalt Pavement thickness will be determined from cores secured from each sublot for this purpose. Such cores will be taken and measured by the Asphalt Concrete Coring Method. This method can be found at in Section 321.14. Each core location will be patched by the party responsible for the testing.

If the pavement thickness is deficient from the target thickness by 0.25 inches or less, it will be paid for at the contract unit price. If the pavement thickness deficiency is greater than 0.25 inches and the contracting agency is not the owner (i.e. permits) the following steps will apply:

1. If the thickness deficiency of the pavement exceeds 0.25 inch, the limits of the deficient area will be isolated by coring at maximum intervals of 100 feet from the deficient core. The thicknesses of the original deficient core will be averaged with the thicknesses of the cores taken from 100 feet on each side of it to determine compliance with the acceptance requirements.

2. If the pavement thickness from step one above deviates from the target thickness by more than 0.25 inch but not more than 0.50 inch, corrective action will be required. This corrective action will consist of application of a Type II slurry seal coat in accordance to Section 715. The Contractor may present an engineering analysis outlining other proposed remedial measures for the consideration of the Engineer. The Engineer will review the engineering analysis and decide within 30 working days whether to accept the proposed remedial measures.

3. If the pavement thickness from step one above deviates from the target thickness by more than 0.50 inch, corrective action will be required. The deficient area will be overlaid with no less than 1 inch thick lift, for the full width of the pavement to meet or exceed the designed thickness, with the appropriate end and edge milling, with a mixture approved by the Engineer. The Contractor may present an engineering analysis outlining other proposed remedial measures for the Engineer's consideration. The Engineer will review the engineering analysis and decide within 10 working days whether to accept the proposed remedial measures. If the Engineer chooses to reject the engineering analysis, the indicated overlay will be constructed by the Contractor at no additional cost to the Owner.

If the pavement thickness deficiency is greater than 0.25 inches and the contracting agency is the owner, Table 321-2 will apply.

TABLE 321-6	
ASPHALT PAVEMENT THICKNESS PAYMENT REDUCTION **For Thickness Deficiency of More Than 0.25 inches and less than 0.50 inches**	
Specified Mat Thickness	**Reduction in Payment or Corrective Action**
Less than 1.5 inches	50%
1.50 inches to 1.99 inches	33%
2.00 inches to 2.49 inches	25%
2.50 inches to 2.99 inches	20%
3.00 inches and over	17%

321.10.5 Density:

Achieving the required compaction is the responsibility of the contractor. The number and types of rollers is the contractor's responsibility and shall be sufficient to meet these requirements.

In-place air voids shall be determined in accordance with AASHTO T269 utilizing cores taken from the finished pavement. The maximum theoretical density used in the determination of in-place air voids will be the average value from the acceptance samples determined for the Lot as outlined in 321.10.1.

The Engineer will designate two random test locations for each sublot and the acceptance laboratory will obtain two cores from each location. The two cores will be averaged for acceptance. The outside one foot of each pass of the pavement course or any unconfined edge will be excluded from testing. The Engineer may exclude areas from the compaction lot that are not accessible by normal compaction equipment.

The Contractor will provide the traffic control to facilitate any coring operations necessary for compaction acceptance.

Cores will be taken per the Asphalt Concrete Coring Method. This method can be found at www.azrockproducts.org or www.azagc.org websites. The acceptance laboratory will furnish test results within 3 working days of receipt of the cores.

If the pavement density has in-place voids of 8.0% or less, the asphalt concrete will be paid for at the contract unit price. If the pavement density has in-place voids greater than 8.0%, the limits of the deficient area will be isolated within the sublot by coring at maximum intervals of 100 feet from the deficient core. The in-place voids of the original deficient core will be averaged with the in-place voids of the cores taken from 100 feet on each side of it to determine compliance with the acceptance requirements. If the average of the in-place voids is greater than 8.0% then Table 321-6 shall apply to the sublot.

TABLE 321-7
PAVEMENT DENSITY PENALTIES

Limits of In-place Air Voids	When the contracting agency is the owner: Payment Reduction ($ per ton of asphalt concrete)	When the contracting agency is not the owner (i.e. permits): Corrective Action
8.1% to 9.0%	$4.00	EA
9.1% to 10.0%	$6.00	EA and Type II Surry Seal
10.1%to 11.0%	Removal*	Removal*
Greater than 11.0%	Removal	Removal

Notes: Removal refers to Section 321-10.6. The Contractor shall remove and replace the entire sublot that is deficient. Removal for In-place Air Voids greater than 11.0% is not eligible for Section 321.10.6.

321.10.6 Engineering Analysis (EA):

Within 10 working days after receiving notice that a sublot of asphalt concrete is deficient for "Removal" by the Engineer, the contractor may submit a written proposal (Engineering Analysis) to accept the material in place at the applicable penalties listed in the "Removal" category. Engineering Analysis can also be proposed for non-removal categories of "Corrective actions" when the contracting agency is not the owner (i.e. permits).

The Engineering Analysis shall contain an analysis of the anticipated performance of the asphalt concrete if left in place. The Engineering Analysis shall also detail the effect of any proposed corrective action on the performance. The Engineering Analysis shall be performed by a professional engineer experienced in asphalt concrete testing and mix designs. If the sublot is submitted for referee testing by the contractor, the ten working days allowed to prepare an engineering analysis will begin upon notification of referee test results.

When an Engineering Analysis recommends that a specific lot or sublot not be removed, the Engineering Analysis will recommend that the following penalties (Table 321-8) be paid when the contracting agency is the owner, for the specific criteria being reviewed by the EA.

TABLE 321-8		
ENGINEERING ANALYSIS PENALTIES for REMOVAL* LOTS/SUBLOTS LEFT IN-PLACE		
Acceptance Criteria	**Acceptance Limits**	**Penalty When Contracting Agency is the Owner ($/Ton)**
Asphalt Binder Content	Over 0.2% points from that Permitted	$9.00
Laboratory Air Voids (Measured at N_{des} or 75 blows as applicable)	Less than 1.5% or Greater Than 8.0%	$3.75
Limits of In-place Air Voids	10.1% to 11.0%	$9.00

Within 15 working days, the Engineer will determine whether or not to accept the contractor's proposed Engineering Analysis.

321.11 REFEREE:

In the event the contractor elects to question the acceptance test results for a sublot, the Contractor may make a written request for additional testing of that sublot. The Contractor will engage an independent laboratory (at the Contractors own expense) who is accredited by AAP in all of the acceptance tests. The independent laboratory shall be acceptable to the Engineer and shall perform a complete new set of acceptance tests (as required by Section 321.10 representing the area or set of tests in question).

These tests shall include asphalt binder content, aggregate gradation, Marshall or Gyratory unit weight, and maximum theoretical unit weight. Samples for referee testing shall come from representative samples obtained from the completed pavement, as directed by the Engineer.

The number of samples taken will be the same as specified in Section 321.10. The independent laboratory shall compile the test results and transmit them to both the Engineer and the Contractor. The independent laboratory shall include a letter signed by an Engineer registered in the State of Arizona, who is experienced in asphalt concrete testing and mix designs. The signed letter shall give an opinion that the material evaluated either does or does not comply with project specifications, and shall clearly describe any deficiencies, and the results will be binding between all parties.

321.12 MEASUREMENT:

Asphalt concrete pavement will be measured by the ton, or by the square yard, for the mixture actually used as allowed above, which shall include the required quantities of mineral aggregates, asphalt binder, and mineral admixture. Measurement shall include any tonnage used to construct intersections, roadways, streets, or other miscellaneous surfaces indicated on the plans or as directed by the Engineer.

321.13 PAYMENT:

The asphalt concrete measured as provided above will be paid for at the contract price per ton or square yard, as adjusted per Section 321.10 ACCEPTANCE, which price shall be full compensation for the item complete, as herein described and specified.

Payment for tack coat will be by the ton diluted, based on the rate of application, as directed by the Engineer.

No payment will be made for any overrun in quantity of asphalt concrete in excess of 10 percent based on actual field measurement of area covered, design thickness, and the mix design unit weight. The calculations and payment for overrun will be by individual pay item. To compensate or adjust for a thickness deficiency in an underlying asphalt concrete course, the Engineer may authorize a quantity increase in excess of 10 percent for a subsequent asphalt concrete course. In such cases, the quantity in excess of 10 percent will be paid for at the lowest unit price.

Except as otherwise specified in the special provisions, no separate payment will be made for work necessary to construct miscellaneous items or surfaces of asphalt concrete.

321.14 ASPHALT CORE METHOD: Core Drilling of Hot Mix Asphalt (HMA) for Specimens of 4” or 6” diameter

321.14.1 SCOPE

This method is to establish a consistent method of the use of a diamond bit core to recover specimens of 4 or 6 inch diameter for laboratory analysis and testing.

The method will require the use of: water, ice (bagged or other suitable type), dry ice, and a water-soap solution to be utilized when coring asphalt rubber concrete.

Individuals doing the specimen recovery should be observing all safety regulations from the equipment manufacturer as well as the required job site safety requirements for actions, and required personal protective equipment.

321.14.2 CORE DRILLING DEVICE

The core drilling device will be powered by an electrical motor, or by an acceptable gasoline engine. Either device used shall be capable of applying enough effective rotational velocity to secure a drilled specimen. The specimen shall be cored perpendicularly to the surface of pavement, and that the sides of the core are cut in a manner to minimize sample distortion or damage.

The machinery utilized for the procedure shall be on a mounted base, have a geared column and carriage that will permit the application of variable pressure to the core head and carriage throughout the entire drilling operation. The carriage and column apparatus shall be securely attached to the base of the apparatus; and the base will be secured with a mechanical fastener or held in place by the body weight of the operator.

The core drilling apparatus shall be equipped with a water spindle to allow water to be introduced inside of the drill stem while operating.

The cutting edge of the core drill bit shall be of hardened steel or other suitable material with embedded diamond chips in the cutting surface. The core barrel shall be of sufficient diameter to secure a specimen that is a minimum of four or six inches or whichever is prescribed for necessary testing. The core barrel shall not be missing more than one of the teeth used for cutting; if so it shall be discarded and another barrel shall be used. The core barrel shall also be a minimum of two inches longer than the anticipated depth of pavement in accordance with project paving plans.

321.14.3 ACCESORY EQUIPMENT

A sufficient supply of ice and dry ice shall be provided to sufficiently cool the pavement prior to securing the samples from the designated areas in the pavement. The ice should also be used to adjust the temperature of the water used to cool the core bit.

A water supply (usually a plastic 35 – 55 gal drum) with sufficient hose to introduce the water into and through the spindle of the coring device by gravity feed. The drum should be white or light in color to minimize excessive thermal heating of the water (*for coring of asphalt rubber cores see footnote 1*).

At no time shall the water utilized in the coring operation exceed 65° F during the coring operation. Ice shall be utilized o ensure the temperature control of the water being introduced during the cutting operation.

An ice chest or other suitably insulated container that can maintain a temperature of less than 70° F shall be used to secure the specimens during transport. The container will be equipped with flat shelving that will support the drilled cores throughout the entire specimen dimension during transport back to the testing facility.

Miscellaneous hand tools to remove the drilled specimen from the drill hole or the core barrel taking great care in not disturbing the specimen more than necessary (refer to fig. 1 in ASTM D 5361-05).

321.14.4 PROCESS

The pavement surface at the time of coring shall not exceed a temperature of 90° F, the pavement shall be conditioned with ice or dry ice to ensure that this requirement is met.

Immediately after it has been ensured that the pavement has dropped to the required temperature, core drilling shall begin. The operator will then apply an even and continuous pressure (note 2) to penetrate through the full depth of the pavement. The operator will concurrently ensure that enough water is moving over the core surface as to adequately remove any and all cuttings that could damage the drilled core.

After the pavement thickness has been penetrated the core shall be carefully removed from either the drill hole or the core barrel and be immediately transferred to an ice chest or other suitable container.

Each individual core shall be placed on a shelf in the cooler with the exposed side of the specimen facing down, or the “top side” down. If the specimen is a two lift core, the only acceptable means of separating lifts is with a power or other acceptable wet saw type of equipment (conforming to ASTM D 5361-05); however, at no time shall cores be split using a mallet and screwdriver or metal straight edge when being tested for bulk density.

Perpendicularity of the specimen shall be checked in the field after the specimen has been extracted from the surface. The core operator shall hold the core up to eye level and place the core top side down in a "speed square" or small carpenters square. The specimen placed in the square shall not depart from perpendicular to the axis more than 0.5^{o} (approximately equivalent to 1/16 of an inch in 6 inches). If the specimen is outside of this distance from square it shall be discarded in the field and another sample cored that falls within tolerance.

The cores upon arriving at the laboratory for testing shall be carefully cleaned and measured for thickness in accordance with ASTM D 3549. A speed square shall be utilized to measure squareness as compared to a 90° degree angle and shall not depart from perpendicular to the axis more than 0.5^{o} (approximately equivalent to 1/16 of an inch in 6 inches).

All remaining testing shall be done within the parameters of the current project and / or agency required specification.

- **Note 1** – It should be noted (as stated in Section 3.2) that when the material to be cored is a rubberized asphalt mixture a wetting agent such as liquid dish soap shall be added to the water barrel to hinder the material from sticking or allowing the binder to spread during coring.
- **Note 2** – Section 4.2 refers to pressure exerted on the core barrel and machine during the coring process. Too much pressure can cause damage to the core barrel and the motor; and too little pressure can cause a glazing of the diamonds, reducing cutting efficiency and premature wear of the barrel.

ASPHALT CONCRETE

Updated 09-03-08

710.1 GENERAL:

Asphalt concrete shall be a mixture of asphalt cement and mineral aggregates. Mineral admixture shall be included in the mixture when required by the mix design or by the Engineer. Asphalt concrete shall be produced in accordance with Section 321.

The designation for asphalt concrete mixes shall be based on the nominal maximum aggregate size of the mix. The applicable mix designations are 3/8 inch, ½ inch, ¾ inch and Base (1") mix.

Each mix shall be designed using Marshall or Gyratory compaction methods. Either Gyratory or Marshall Mixes may be used for low or high traffic conditions, as determined by the agency. Low traffic conditions are conditions where the asphalt mix will be subject to low volume and low weight vehicle usage. Examples of this condition are residential streets, most parking lots and residential minor collector streets. High traffic conditions are conditions where the asphalt mix will be subject to high volume and/or heavy weight vehicle usage as found on major collector, arterial and commercial streets. Street classifications (i.e. minor collector and major collector) shall be determined by the specifying agency.

The following table (Table 710-1) displays the recommended lift thickness for various asphalt concrete mix designations found within Section 710. Please note that these recommended lift thicknesses are minimums based on each mix designation's "Nominal Aggregate Size" and the relative coarseness of its gradation. The compacted thickness of layers placed shall not exceed 150% of the Minimum Lift Thickness of Table 710-1 except as otherwise provided in the plans and specifications, or if approved in writing by the Engineer.

TABLE 710-1		
RECOMMENDED MINIMUM LIFT THICKNESS'S for ASPHALT CONCRETE MIXES		
Asphalt Concrete Mix Designation (inches)	Minimum Lift Thickness Marshall Mixes	Minimum Lift Thickness Gyratory Mixes
3/8"	1.0 inches	1.5 inches
1/2"	1.5 inches	2.0 inches
3/4"	2.5 inches	3.0 inches
Base	3.0 inches	n/a

710.2 MATERIAL:

710.2.1 Asphalt Binder: The asphalt binder specified in this section has been developed for use in desert climate conditions. Should it be utilized in other climates, consideration should be given to adjustments in the asphalt binder selection. The asphalt binder shall be Performance Grade Asphalt conforming to the requirements of Section 711 for PG 70-10, unless otherwise approved by the Engineer or specified differently in the plans or special provisions.

710.2.2 Aggregate: Coarse and Fine aggregates shall conform to the applicable requirements of this section. Coarse mineral aggregate shall consist of crushed gravel, crushed rock, or other approved inert material with similar characteristics, or a combination thereof, conforming to the requirements of these specifications.

Coarse aggregate for hot mix asphalt is material retained on or above the No. 4 sieve and Fine aggregate is material passing the No. 4 sieve. Aggregates shall be relatively free of deleterious materials, clay balls, and adhering films or other material that prevent coating with the asphalt binder. Coarse and Fine aggregates shall conform to the following requirements when tested in accordance with the applicable test methods.

TABLE 710-2

COARSE/FINE AGGREGATE REQUIREMENTS

Characteristics	Test Method	Low Traffic	High Traffic
Fractured Faces, % (Coarse Aggregate Only)	Arizona 212	75, 1 or more	85, 1 or more 80, 2 or more
Uncompacted Voids, % Min.	AASHTO T-304, Method A	42	45
Flat & Elongated Pieces, % 5:1 Ratio	ASTM D-4791	10.0 Max.	10.0 Max.
Sand Equivalent, %	AASHTO T-176	50 Min.	50 Min.
Plasticity Index	AASHTO T-90	Non-plastic	Non-plastic
L.A. Abrasion, %Loss	AASHTO T-96	9 max. @ 100 Rev. 40 max. @ 500 Rev.	9 max. @ 100 Rev. 40 max. @ 500 Rev.
Combined Bulk Specific Gravity	AI MS-2/SP-2	2.35 – 2.85	2.35 – 2.85
Combined Water Absorption	AI MS-2/SP-2	0 – 2.5%	0 – 2.5%

Tests on aggregates used in asphalt concrete outlined above, shall be performed on materials furnished for mix design purposes and composited to the mix design gradation.

Blend sand (naturally occurring or crushed fines) shall be clean, hard and sound material which will readily accept asphalt binder coating. The blend sand grading shall be such that, when it is mixed with the other mineral aggregates, the combined product shall meet the requirements of Table 710-2.

The natural sand shall not exceed 20 percent for the Marshall mixes and 15 percent for the Gyratory mixes by weight of the total aggregate for a mix.

710.2.3 Mineral Admixture: Mineral admixture when used as an anti-stripping agent in asphalt concrete shall conform to the requirements of AASHTO M-17. Mineral admixture used in asphalt concrete shall be dry hydrated lime, conforming to the requirements of ASTM C-1097 or Portland cement conforming to ASTM C 150Type II or ASTM C 595 Type IP. The amount of hydrated lime or Portland cement used shall be determined by the mix design. The minimum Mineral admixture content within a mix will be 1.00 percent, by weight of total aggregate.

710.3 MIX DESIGN REQUIREMENTS:

710.3.1 General: The mix design for asphalt concrete shall be prepared by a laboratory that is accredited through the AASHTO Accreditation Program (AAP) in Hot Mix Asphalt Aggregates and Hot Mix Asphalt. The laboratory shall be under the direct supervision of a Civil Engineer, registered by the State of Arizona, and who is listed by ADOT as a "Qualified Asphaltic Concrete Mix Design Engineer" within ADOT's latest list of approved laboratories. The latest list of approved laboratories is available on ADOT's web page www.azdot.gov. The date of the design shall not be older than 1 year from the date of submittal, unless supportive documentation is provided and approved by the Engineer.

The mix design report shall include the following elements as a minimum.

(1) The name and address of the testing organization and the person responsible for the mix design report.

(2) The mix plant identification and/or location, as well as the supplier or producer name.

(3) A description of all products that are incorporated in the asphalt concrete along with the sources of all products, including admixtures and asphalt binder, and their method of introduction.

(4) The supplier and grade of asphalt binder, the source and type of mineral aggregate, and the percentage of asphalt binder and mineral admixture used.

(5) The mix design report shall state the traffic condition (low or high traffic) and size designation. In all cases Gyratory based mix designs shall be designated as high traffic mixes. Marshall based mix design shall be designated either low or high traffic mixes.

(6) The results of all testing, determinations, etc., such as: specific gravity and gradation of each component, water absorption, sand equivalent, loss on abrasion, fractured coarse aggregate particles, Tensile Strength Ratio (AASHTO T 283), Marshall stability and flow, asphalt absorption, percent air voids, voids in mineral aggregate, and bulk density. Historical abrasion values may be supplied on existing sources. The submittal should include a plot of the gradation on the Federal Highway Administration's 0.45 Power Gradation Chart, plots of the compaction curves and the results of moisture sensitivity testing.

(7) The laboratory mixing and compaction temperature ranges for the supplier and grade of asphalt binder used within the mix design.

(8) A specific recommendation for design asphalt binder content and any limiting conditions that may be associated with the use of the design, such as minimum percentages of crushed or washed fine aggregate.

(9) The supplier's product code, the laboratory Engineer's seal (signed and dated), and the date the design was performed.

The mix design shall be submitted to the Agency or Engineer by the Contractor/Supplier for which it was developed as part of his project submittals. Once the mix design has been approved by the agency or Engineer, the Contractor and/or his supplier shall not change plants nor utilize additional mixing plants without prior approval of the Engineer. Any changes in the plant operation, the producer's pit, the asphalt binder, including modifiers in the asphalt binder, or any other item that will cause an adjustment in the mix, shall be justification for a new mix design to be submitted.

710.3.2 Mix Design Criteria: The mix design shall be performed by one of two methods, Marshall Mix Design or Gyratory Mix Design. The method shall be specified on the plans, special provisions, or by the Engineer. A minimum of 4 points will be used to establish the mix design results. The oven aging period for both Marshall and Gyratory mix design samples shall be 2 hours.

710.3.2.1 Marshall Mix Design: The Marshall Mix Design shall be performed in accordance with the requirements of the latest edition of the Asphalt Institute's Manual, MS-2 "Mix Design Methods for Asphalt Concrete." The mix shall utilize the compactive effort of 75 blows per side of specimen. The mix shall comply with the criteria in Table 710-3.

TABLE 710-3
MARSHALL MIX DESIGN CRITERIA

Criteria	Requirements				Designated Test Method
	3/8" Mix	1/2" Mix	3/4" Mix	Base Mix	
1. Voids in Mineral Aggregate: %, min	15.0	14.0	13.0	12.0	AI MS-2
2. Effective Voids: %, Range	4.0 ± 0.2	4.0 ± 0.2	4.0 ± 0.2	4.0 ± 0.2	AI MS-2
3. Absorbed Asphalt: %, Range *	0 - 1.0	0 - 1.0	0 - 1.0	0 - 1.0	AI MS-2
4. Dust to Eff. Asphalt Ratio, Range **	0.6 – 1.4	0.6 – 1.4	0.6 – 1.4	0.6 – 1.4	AI MS-2
5. Tensile Strength Ratio: %, Min.	65	65	65	65	AASHTO T-283
6. Dry Tensile Strength: psi, Min.	100	100	100	100	AASHTO T-283
7. Stability: pounds, Minimum	2,000	2,500	2,500	3000	AASHTO T-245
8. Flow: 0.01-inch, Range	8 - 16	8 - 16	8 – 16	8 – 16	AASHTO T-245
9. Mineral Aggregate Grading Limits					AASHTO T-27

Sieve Size	Percent Passing with Admix			
	3/8 inch Mix	1/2 inch Mix	3/4 inch Mix	Base Mix
1-1/4 inch				100
1 inch			100	90-100
3/4 inch		100	90 – 100	85-95
1/2 inch	100	85 – 100	---	---
3/8 inch	90-100	62 – 85	62 – 77	57-72

No. 8	45-60	40 – 50	35 – 47	33-43
No. 40	10-22	10 – 20	10 – 20	9-18
No. 200	2.0 – 10.0	2.0 – 10.0	2.0 – 8.0	1.0 – 7.0

* Unless otherwise approved by the Engineer.

** The ratio of the mix design composite gradation target for the No. 200 sieve, including admixture, to the effective asphalt content shall be within the indicated range.

710.3.2.2 Gyratory Mix Design: Gyratory Mix Designs shall be performed in accordance with the requirements of latest edition of the Asphalt Institute's SP-2 manual. Mix design laboratory compacted specimens shall be prepared using a gyratory compactor in accordance with AASHTO T-312.

The mix design shall be formulated in a manner described for volumetric mix designs in the current edition of the Asphalt Institute Manual SP-2, except the number of trial blend gradations necessary will be determined by the mix design laboratory. Duplicate gyratory samples shall be prepared at a minimum of four (4) binder contents to select the recommended binder content. The completed mix design shall meet all the mineral aggregate and mix design criteria specified herein.

For purposes of design, the number of gyrations shall be 8 for Nini, 100 for Ndes, and 160 for Nmax. The corrected density of the specimens shall be less than 89.0 percent of maximum theoretical density at 8 gyrations. The corrected density of the specimens shall be less than 98.0 percent of maximum theoretical density at 160 gyrations.

The Gyratory mix shall comply with the criteria in Table 710-4.

TABLE 710-4
GYRATORY MIX DESIGN CRITERIA

Criteria	**Requirements**			**Designated Test**
	3/8" Mix	**1/2" Mix**	**3/4" Mix**	**Method**
1. Voids in Mineral Aggregate: %, Min.	15.0	14.0	13.0	AI SP-2
2. Effective Voids: %, Range	4.0 ± 0.2	4.0 ± 0.2	4.0 ± 0.2	AI SP-2
3. Absorbed Asphalt: %, Range *	0 - 1.0	0 - 1.0	0 - 1.0	AI SP-2
4. Dust to Eff. Asphalt Ratio, Range **	0.6 – 1.4	0.6 – 1.4	0.6 – 1.4	AI SP-2
5. Tensile Strength Ratio: %, Min.	75	75	75	AASHTO T-283
6. Dry Tensile Strength: psi, Min.	75	75	75	AASHTO T-283
7. Mineral Aggregate Grading Limits				AASHTO T-27

	Percent Passing with Admix		
Sieve Size	**3/8 inch Mix**	**1/2 inch Mix**	**3/4 inch Mix**
1 inch			100
3/4 inch		100	90-100
1/2 inch	100	90-100	43-89
3/8 inch	90-100	53-89	-
No. 8	32-47	29-40	24-36
No. 40	2-24	3-20	3-18
No. 200	2.0-8.0	2.0-7.5	2.0-6.5

* Unless otherwise approved by the Engineer.
** The ratio of the mix design composite gradation target for the No. 200 sieve, including admixture, to the effective asphalt content shall be within the indicated range.

710.3.2.3 Moisture Sensitivity Testing: Moisture sensitivity testing will be performed in accordance with AASHTO Test Method T-283 for both Marshall and Gyratory mix designs, without the freeze/thaw cycle(s). The minimum required Tensile Strength Ratio is indicated in the tables above.

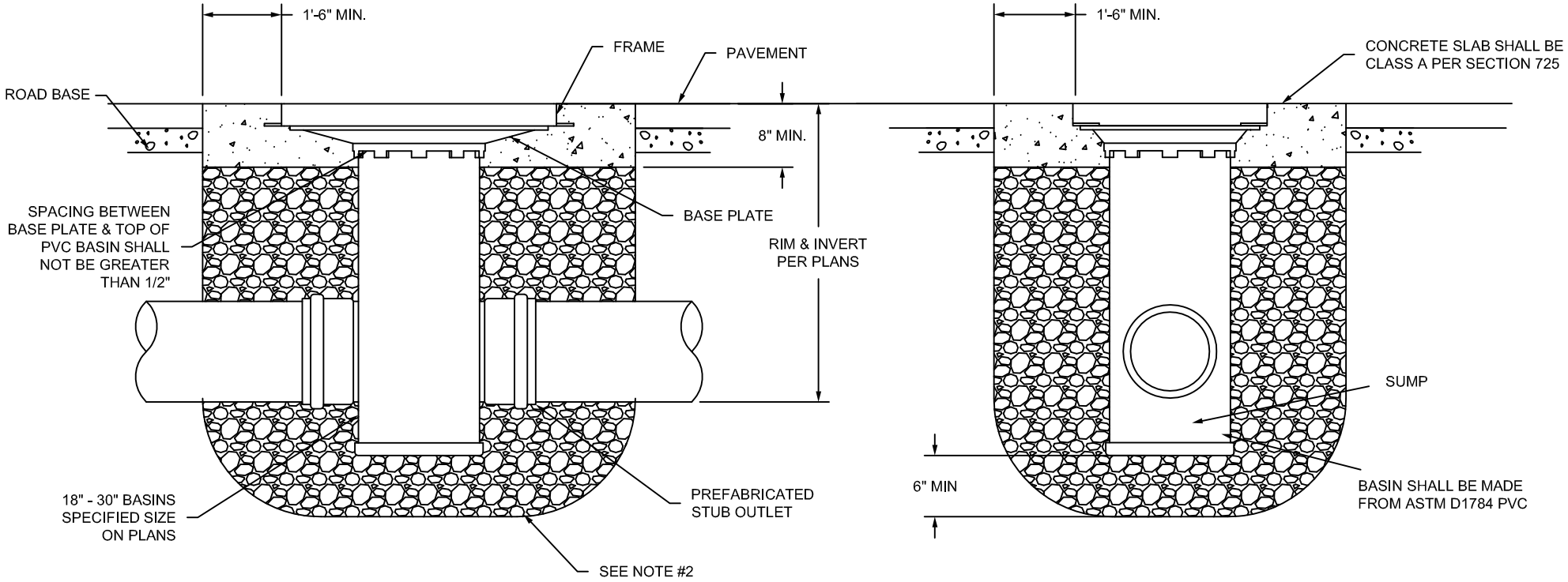

PLAN VIEW

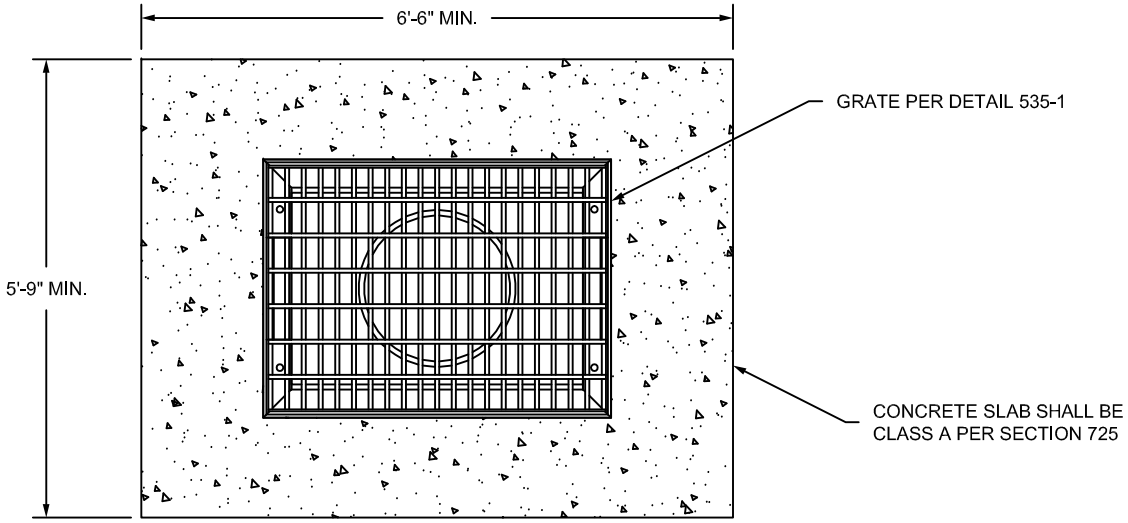

NOTES:

1. STUB OUT MATERIALS SHALL BE CORRUGATED HIGH DENSITY POLYETHYLENE PIPE, PVC SDR-35, PVC SCH 40, PVC C-900, DIP. STUB OUT SHALL BE TWO FEET LONG FOR CONNECTION TO CMP AND RGRCP PIPE WITH A CONCRETE COLLAR PLACED PER MAG DETAIL 505 WITH A MAG 738.2.4 WATER STOP. UNLESS OTHERWISE INDICATED ON THE PLANS.

2. BACKFILL MATERIAL UNDER CONCRETE SLAB SHALL BE CRUSHED ROCK PER SECTION 701.2.1 PLACED UNIFORMLY IN MAXIMUM 8" LIFTS & COMPACTED TO A MINIMUM OF 95% STANDARD PROCTOR DENSITY PER SECTION 601.4.10 OR 1/2 SACK CLSM PER SECTION 728.

3. FILL SUMP WITH CONCRETE TO INVERT. CONCRETE SHALL BE A MINIMUM OF CLASS C PER SECTION 725.

4. FASTEN FRAME & BASE PLATE WITH (4) 1/2" X 3 1/2" ZINC PLATED BOLTS WITH (4) 1/2" ZINC PLATED NUTS.

DETAIL NO.			REVISED	DETAIL NO.
535-2		CATCH BASIN 'J '		535-2

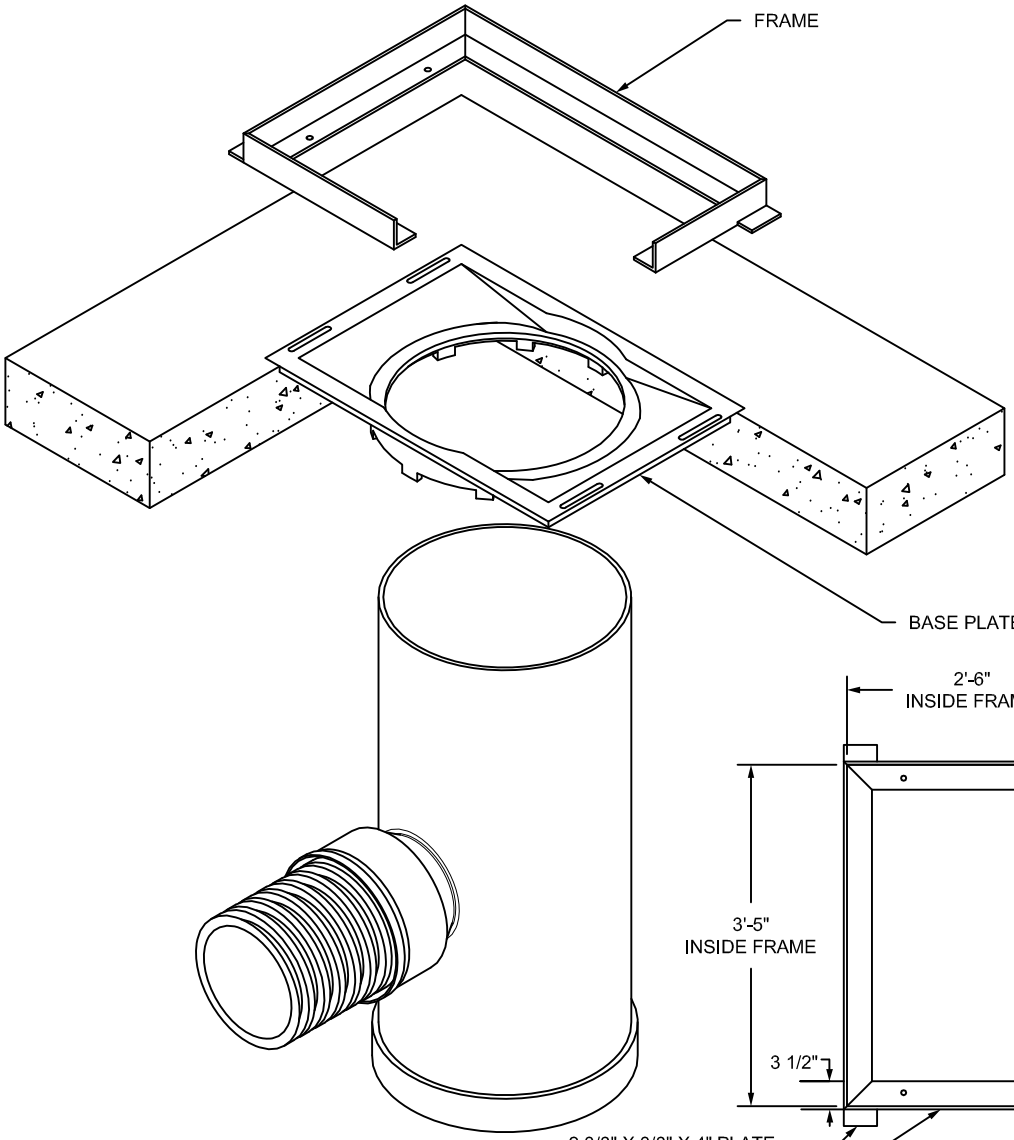

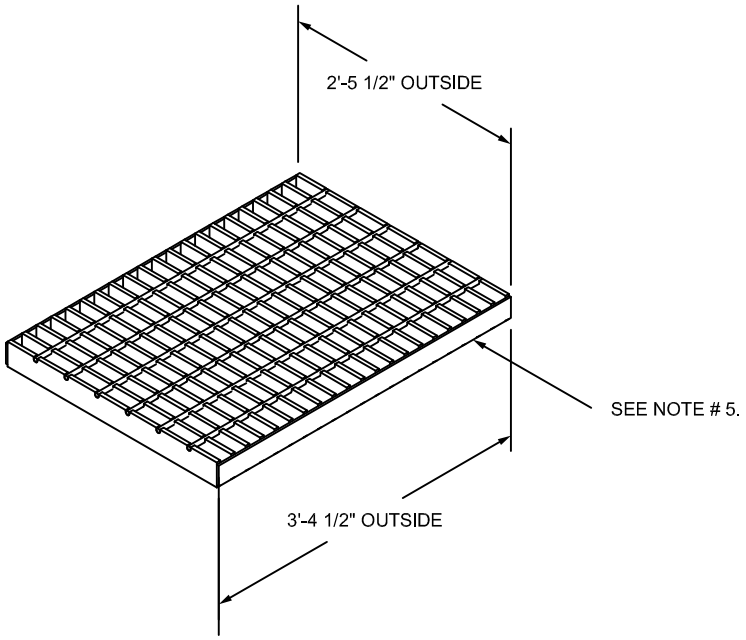

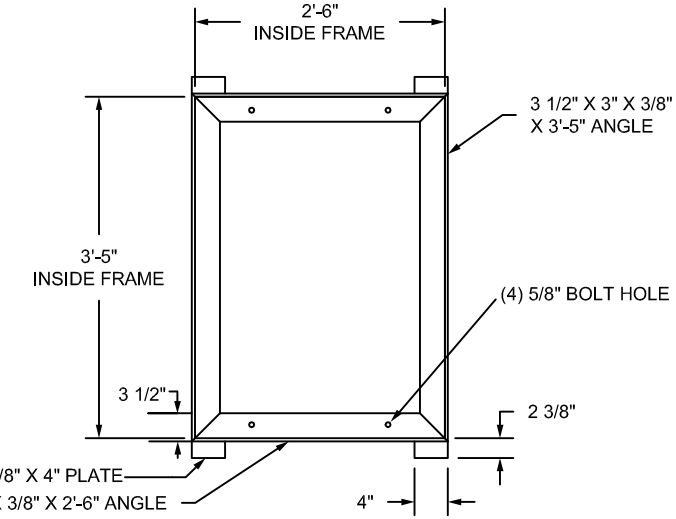

NOTES:

1. GRATE SHALL MEET H-20 LOAD RATING.

2. QUALITY: FRAME & GRATE MATERIALS SHALL CONFORM TO ASTM A-36 STEEL.

3. BASE PLATE MATERIALS SHALL CONFORM TO ASTM A53 GRADE 70-50-05 DUCTILE IRON.

4. ALL STRUCTURAL STEEL TO BE PAINTED ONE SHOP COAT OF NO. 1 PAINT AND TWO FIELD COATS OF NO. 10 PAINT AS PER SECT. 790.

5. GRATE PER DETAIL 535-1.

6. APPROX. DRAIN AREA = 761.18 SQ IN.

7. TOP OF BASE PLATE TO TOP OF DRAIN BASIN:
18" & 24" BASE = 2 13/16", 30" BASE = 7/16".

DETAIL NO.			REVISED	DETAIL NO.
535-3		FRAME AND GRATE FOR CATCH BASIN 'J '		535-3

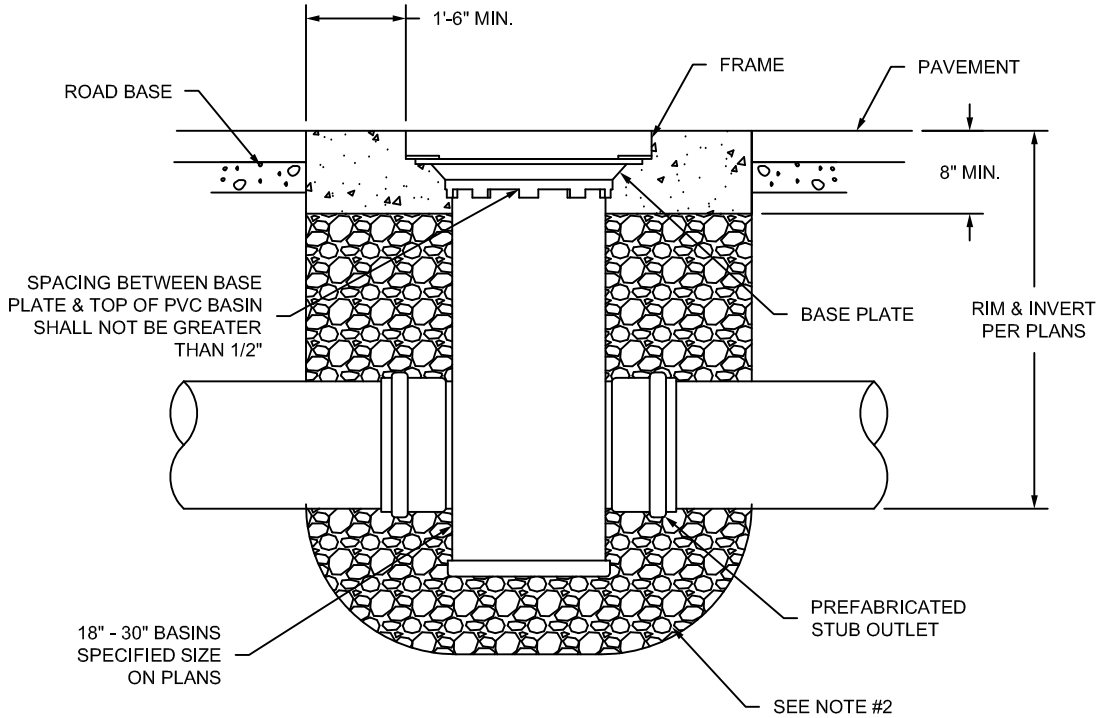

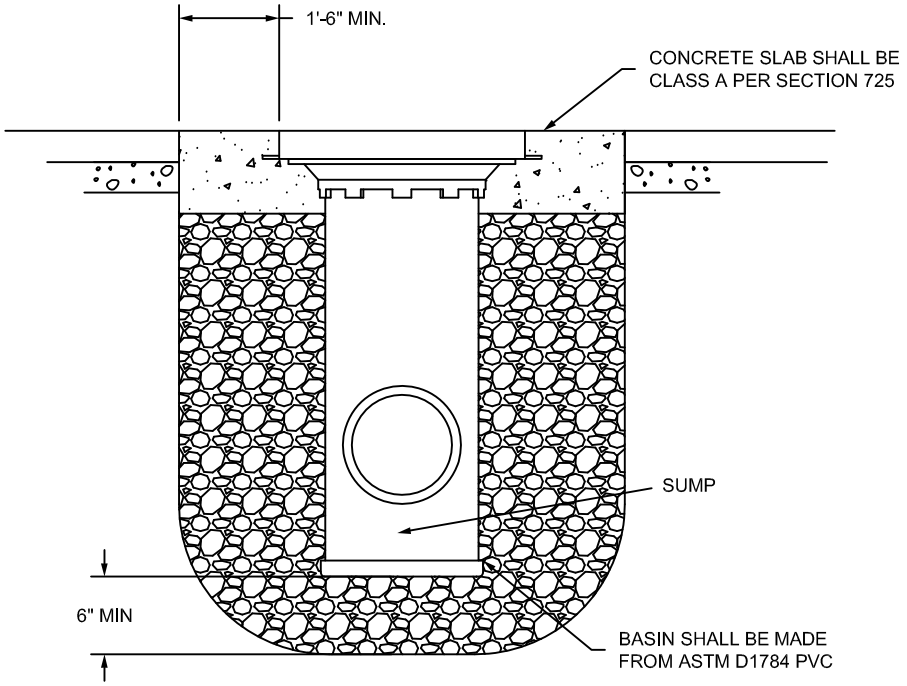

PLAN VIEW

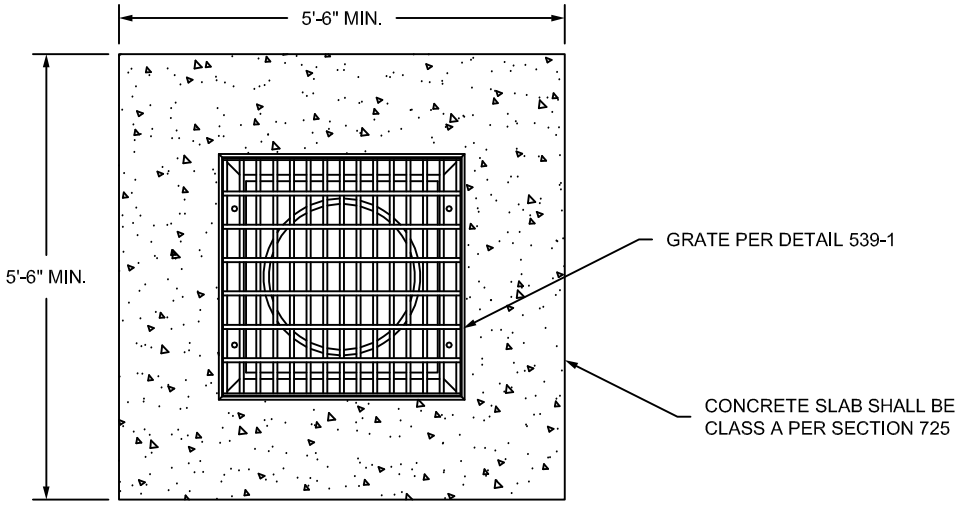

NOTES:

1. STUB OUT MATERIALS SHALL BE CORRUGATED HIGH DENSITY POLYETHYLENE PIPE, PVC SDR-35, PVC SCH 40, PVC C-900, DIP. STUB OUT SHALL BE TWO FEET LONG FOR CONNECTION TO CMP AND RGRCP PIPE WITH A CONCRETE COLLAR PLACED PER MAG DETAIL 505 WITH A MAG 738.2.4 WATER STOP. UNLESS OTHERWISE INDICATED ON THE PLANS.

2. BACKFILL MATERIAL UNDER CONCRETE SLAB SHALL BE CRUSHED ROCK PER SECTION 701.2.1 PLACED UNIFORMLY IN MAXIMUM 8" LIFTS & COMPACTED TO A MINIMUM OF 95% STANDARD PROCTOR DENSITY PER SECTION 601.4.10 OR 1/2 SACK CLSM PER SECTION 728.

3. FILL SUMP WITH CONCRETE TO INVERT. CONCRETE SHALL BE A MINIMUM OF CLASS C PER SECTION 725.

4. FASTEN FRAME & BASE PLATE WITH (4) 1/2" X 3 1/2" ZINC PLATED BOLTS WITH (4) 1/2" ZINC PLATED NUTS.

DETAIL NO.			REVISED	DETAIL NO.
537-2		CATCH BASIN - TYPE 'I'		537-2

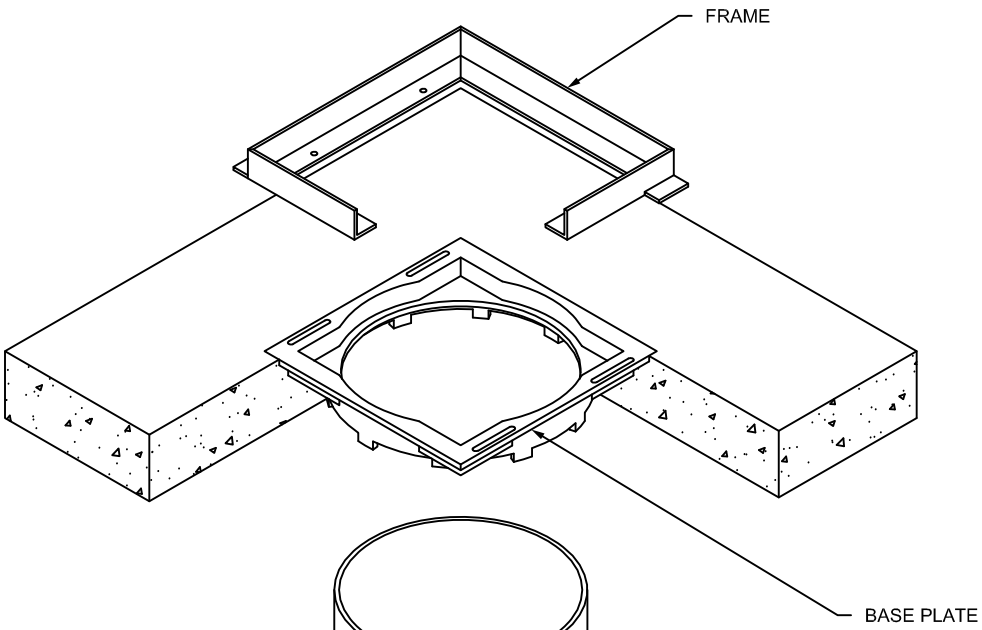

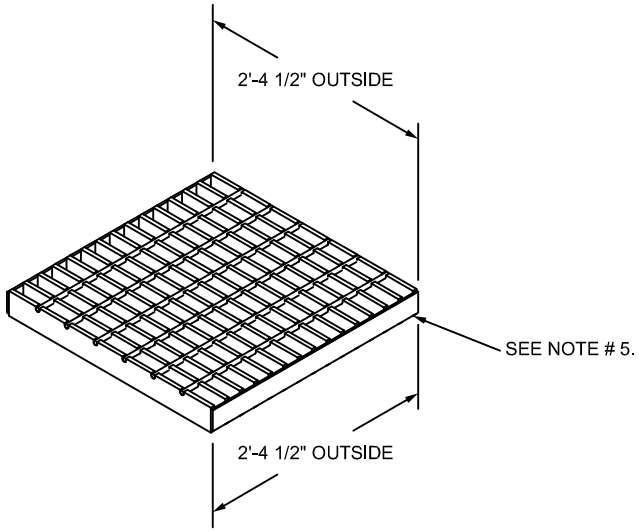

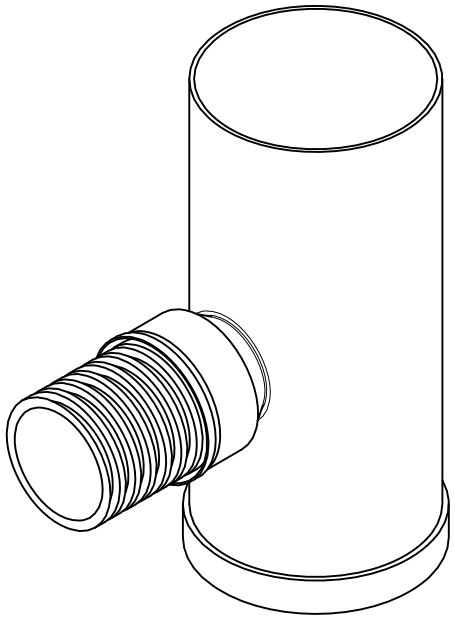

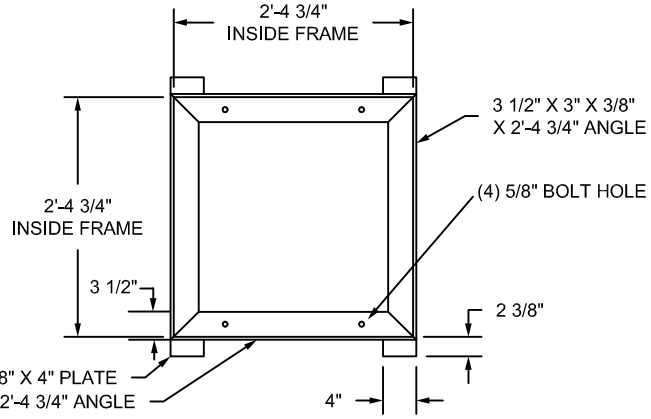

NOTES:

1. GRATE SHALL MEET H-20 LOAD RATING.

2. QUALITY: FRAME & GRATE MATERIALS SHALL CONFORM TO ASTM A-36 STEEL.

3. BASE PLATE MATERIALS SHALL CONFORM TO ASTM A53 GRADE 70-50-05 DUCTILE IRON.

4. ALL STRUCTURAL STEEL TO BE PAINTED ONE SHOP COAT OF NO. 1 PAINT AND TWO FIELD COATS OF NO. 10 PAINT AS PER SECT. 790.

5. GRATE PER DETAIL 539-1 (SINGLE GRATE).

6. APPROX. DRAIN AREA = 551.25 SQ IN.

7. TOP OF BASE PLATE TO TOP OF DRAIN BASIN:
18" & 24" BASE = 2 13/16", 30" BASE = 7/16".

DETAIL NO.			REVISED	DETAIL NO.
539-2		FRAME AND GRATE FOR CATCH BASIN 'I '		539-2

Include the following paragraph as new Section 601.4.10

601.4.10 Backfill for PVC Catch Basins: Backfill below and around PVC catch basins shall be placed in maximum 8-inch lifts and thoroughly compacted to at least 95% of maximum density when tested and determined by AASHTO T-99, Method A, with the percent of density adjusted in accordance with the rock correction procedure for maximum density determination, MAG Detail 190, to compensate for the rock content larger than that which will pass a No. 4 sieve.

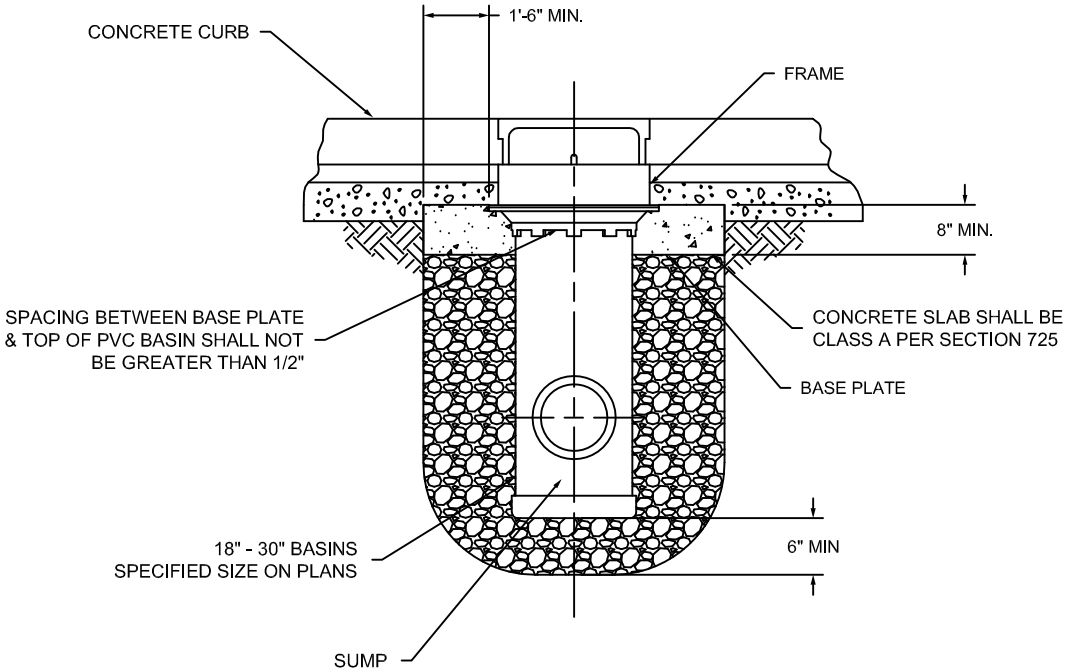

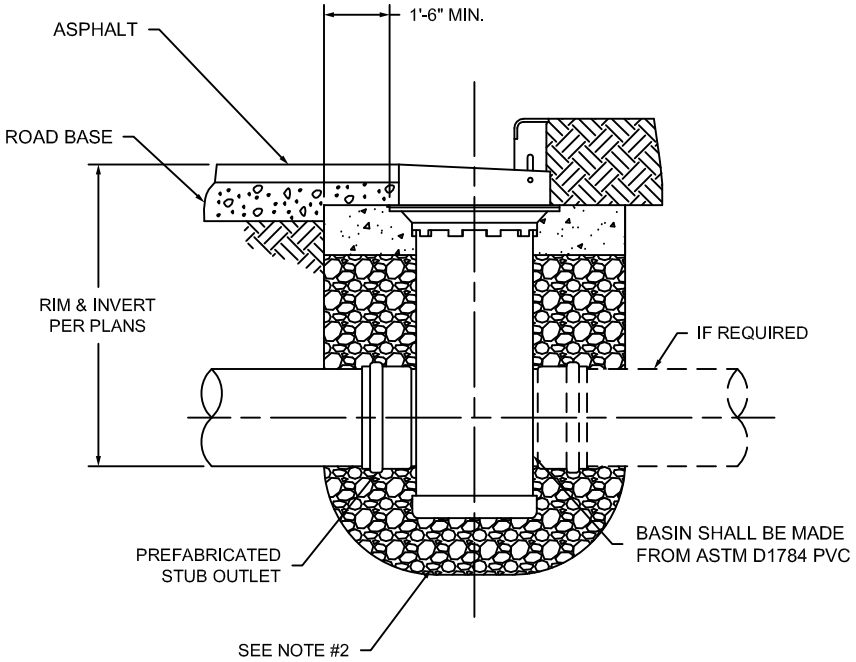

PLAN VIEW

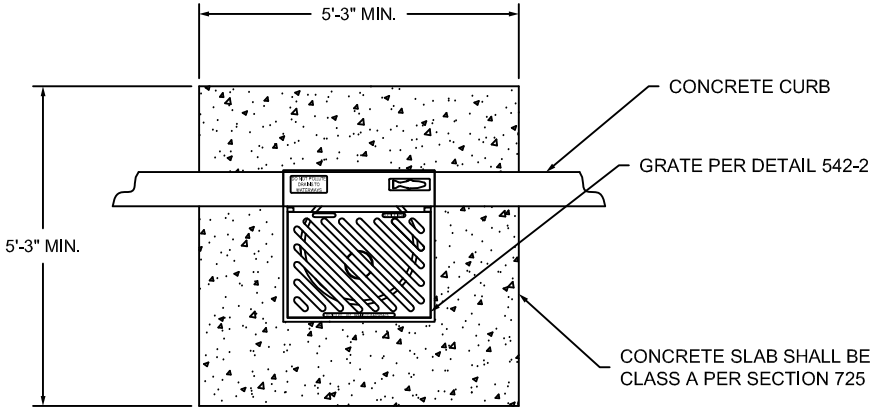

NOTES:

1. STUB OUT MATERIALS SHALL BE CORRUGATED HIGH DENSITY POLYETHYLENE PIPE, PVC SDR-35, PVC SCH 40, PVC C-900, DIP. STUB OUT SHALL BE TWO FEET LONG FOR CONNECTION TO CMP AND RGRCP PIPE WITH A CONCRETE COLLAR PLACED PER MAG DETAIL 505 WITH A MAG 738.2.4 WATER STOP. UNLESS OTHERWISE INDICATED ON THE PLANS.

2. BACKFILL MATERIAL UNDER CONCRETE SLAB SHALL BE CRUSHED ROCK PER SECTION 701.2.1 PLACED UNIFORMLY IN MAXIMUM 8" LIFTS & COMPACTED TO A MINIMUM OF 95% STANDARD PROCTOR DENSITY PER SECTION 601.4.10 OR 1/2 SACK CLSM PER SECTION 728.

3. FILL SUMP WITH CONCRETE TO INVERT. CONCRETE SHALL BE A MINIMUM OF CLASS C PER SECTION 725.

4. FASTEN FRAME & BASE PLATE WITH (4) 1/2" X 3 1/2" ZINC PLATED BOLTS WITH (4) 1/2" ZINC PLATED NUTS.

DETAIL NO.			REVISED	DETAIL NO.
542-1		2 ' X 2 ' CURB INLET INSTALLATION DETAIL		542-1

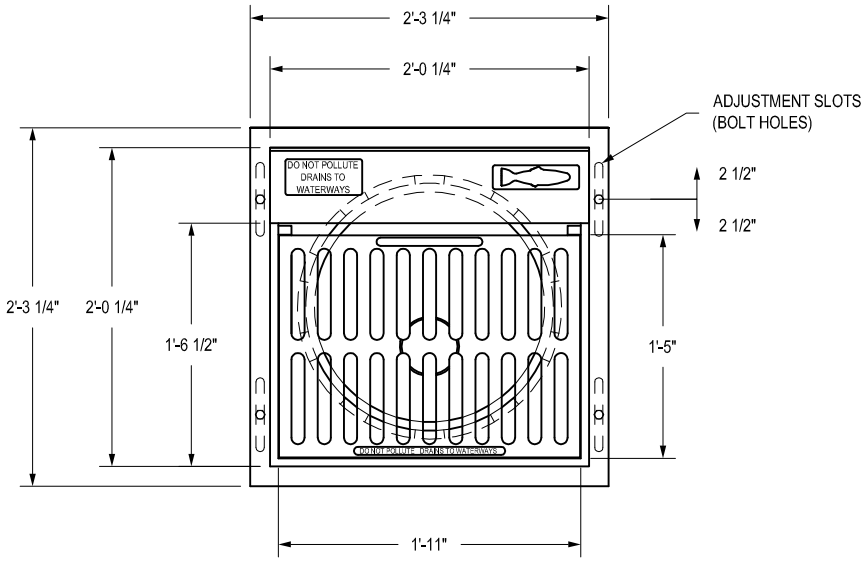

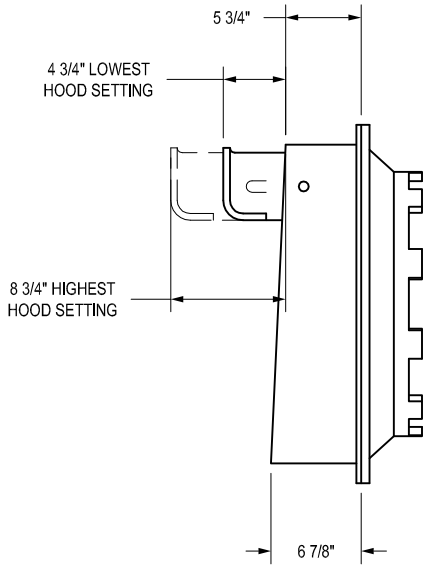

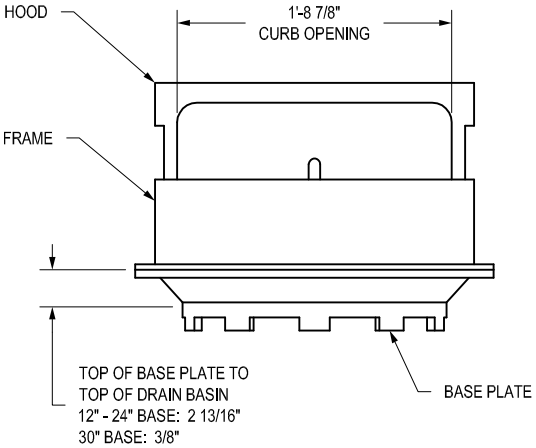

APPROX. DRAIN AREA OF STANDARD GRATE = 146.18 SQ IN.
APPROX. DRAIN AREA OF STANDARD GRATE & HOOD
LOWEST HOOD SETTING = 227.37 SQ IN
LOWEST HOOD + 1" SETTING = 248.25 SQ IN
LOWEST HOOD + 2" SETTING = 269.12 SQ IN
LOWEST HOOD + 3" SETTING = 290.00 SQ IN
HIGHEST HOOD SETTING = 310.87 SQ IN

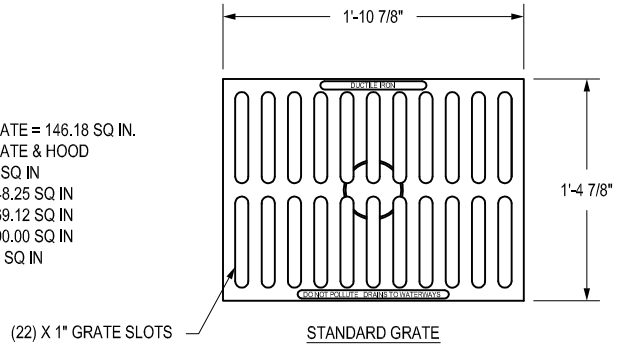

STANDARD GRATE

APPROX. DRAIN AREA OF DIAGONAL GRATE = 146.70 SQ IN.
APPROX. DRAIN AREA OF DIAGONAL GRATE & HOOD
LOWEST HOOD SETTING = 227.89 SQ IN
LOWEST HOOD + 1" SETTING = 248.77 SQ IN
LOWEST HOOD + 2" SETTING = 269.64 SQ IN
LOWEST HOOD + 3" SETTING = 290.52 SQ IN
HIGHEST HOOD SETTING = 311.39 SQ IN

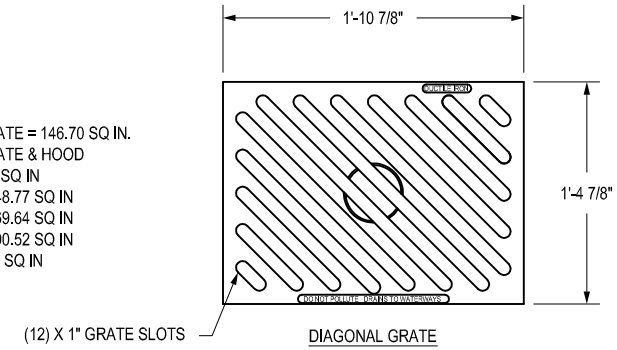

DIAGONAL GRATE

NOTES:
1. MATERIAL: DUCTILE IRON GRATE SHALL MEET H-20 LOAD.
2. RATING & CONFORMING TO ASTM A536 GRADE 70-50-05.
3. ALL CASTINGS ARE FURNISHED WITH BLACK PAINT.
4. SLOPE OF GRATE SURFACE IS 5.2%.
5. CURB INLET FRAME INSIDE VOLUME IS APPROX. 1.76 CU FT.

DETAIL NO.			REVISED	DETAIL NO.
542-2		2 ' X 2 ' CURB INLET DETAIL		542-2

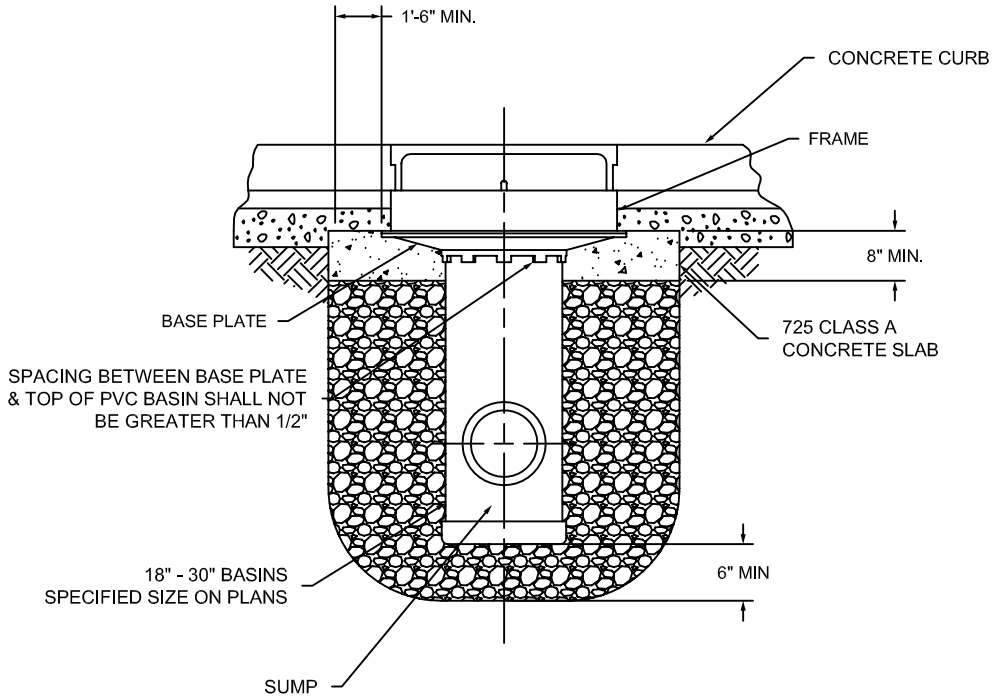

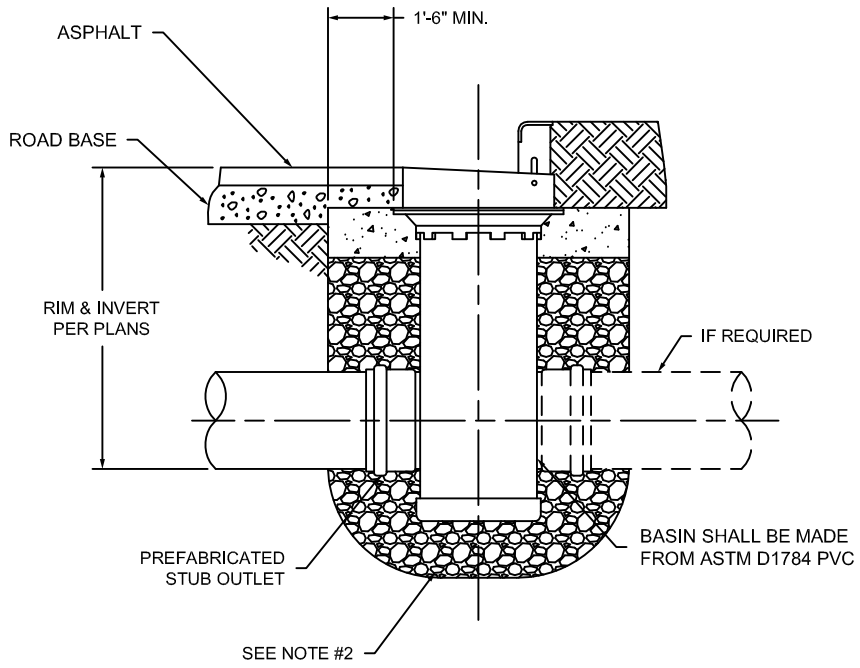

PLAN VIEW

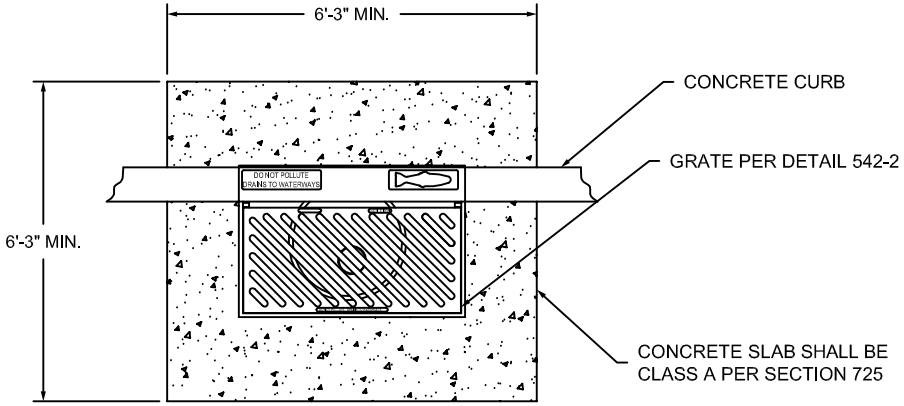

NOTES:

1. STUB OUT MATERIALS SHALL BE CORRUGATED HIGH DENSITY POLYETHYLENE PIPE, PVC SDR-35, PVC SCH 40, PVC C-900, DIP. STUB OUT SHALL BE TWO FEET LONG FOR CONNECTION TO CMP AND RGRCP PIPE WITH A CONCRETE COLLAR PLACED PER MAG DETAIL 505 WITH A MAG 738.2.4 WATER STOP. UNLESS OTHERWISE INDICATED ON THE PLANS.

2. BACKFILL MATERIAL UNDER CONCRETE SLAB SHALL BE CRUSHED ROCK PER SECTION 701.2.1 PLACED UNIFORMLY IN MAXIMUM 8" LIFTS & COMPACTED TO A MINIMUM OF 95% STANDARD PROCTOR DENSITY PER SECTION 601.4.10 OR 1/2 SACK CLSM PER SECTION 728.

3. FILL SUMP WITH CONCRETE TO INVERT. CONCRETE SHALL BE A MINIMUM OF CLASS C PER SECTION 725.

4. FASTEN FRAME & BASE PLATE WITH (4) 1/2" X 3 1/2" ZINC PLATED BOLTS WITH (4) 1/2" ZINC PLATED NUTS.

DETAIL NO.			REVISED	DETAIL NO.
543-1		2 ' X 3 ' CURB INLET INSTALLATION DETAIL		543-1

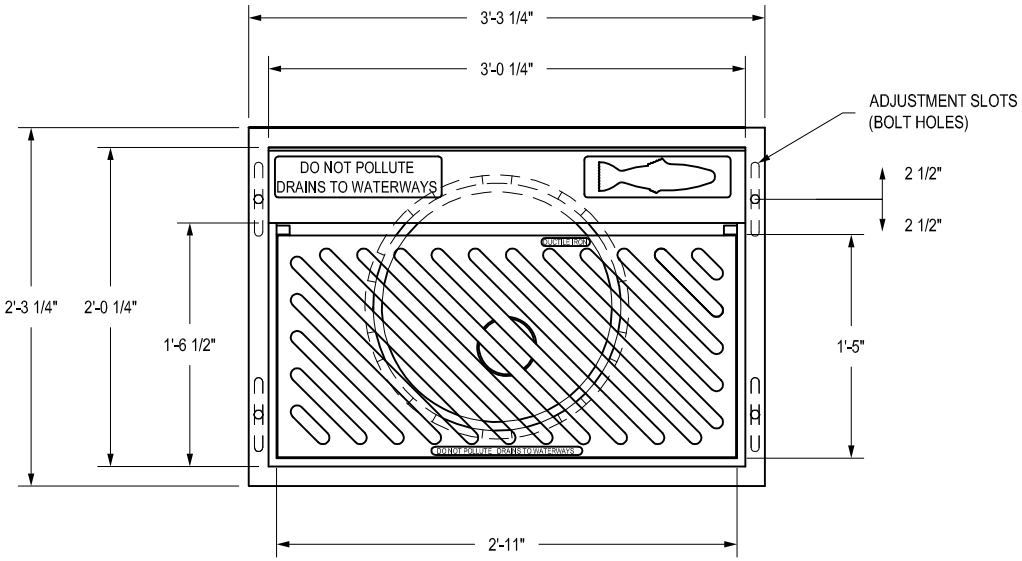

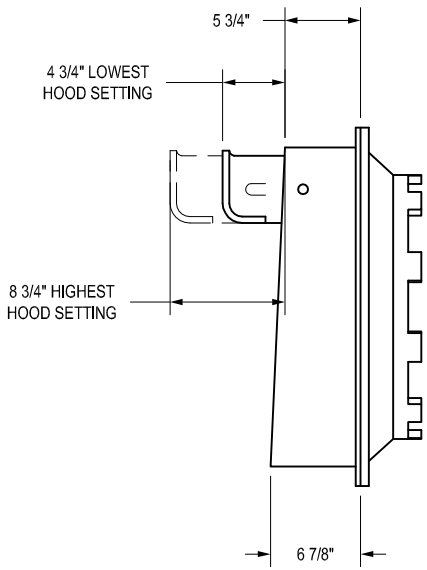

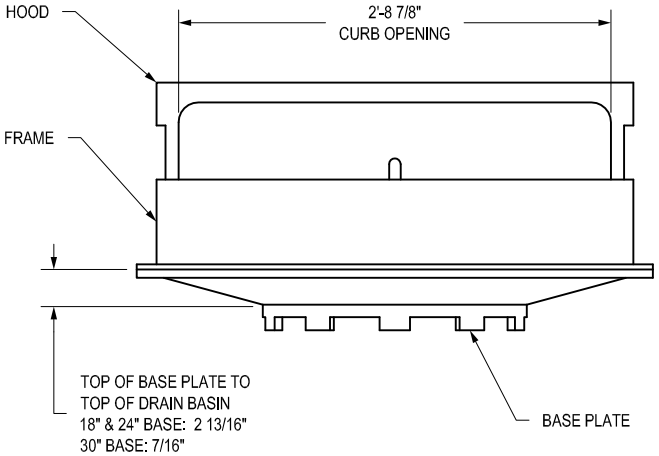

APPROX. DRAIN AREA OF DIAGONAL GRATE = 232.87 SQ IN.
APPROX. DRAIN AREA OF DIAGONAL GRATE & HOOD
LOWEST HOOD SETTING = 369.54 SQ IN
LOWEST HOOD + 1" SETTING = 402.41 SQ IN
LOWEST HOOD + 2" SETTING = 435.29 SQ IN
LOWEST HOOD + 3" SETTING = 468.16 SQ IN
HIGHEST HOOD SETTING = 501.044 SQ IN
APPROX. WEIGHT OF GRATE = 112.5 LBS.
APPROX. WEIGHT OF GRATE, FRAME & HOOD ASSEMBLY
W/ 18" BASE = 477.5 LBS.
W/ 24" BASE = 466.0 LBS..
W/ 30" BASE = 436.5 LBS.

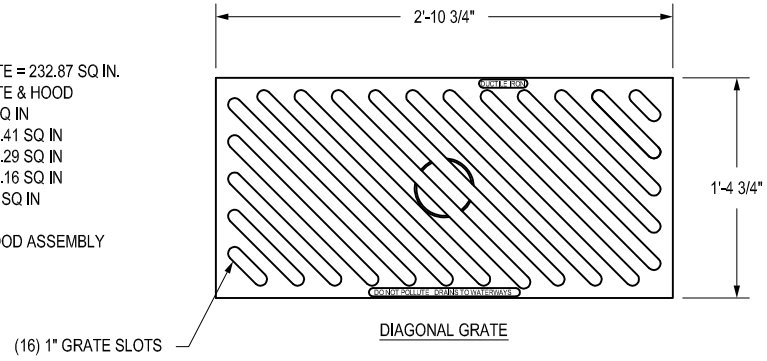

DIAGONAL GRATE

APPROX. DRAIN AREA OF DIAGONAL GRATE = 327.25 SQ IN.
APPROX. DRAIN AREA OF DIAGONAL GRATE & HOOD
LOWEST HOOD SETTING = 463.92 SQ IN
LOWEST HOOD + 1" SETTING = 496.79 SQ IN
LOWEST HOOD + 2" SETTING = 529.67 SQ IN
LOWEST HOOD + 3" SETTING = 562.54 SQ IN
HIGHEST HOOD SETTING = 595.42 SQ IN
APPROX. WEIGHT OF GRATE = 123.0 LBS.
APPROX. WEIGHT OF GRATE, FRAME & HOOD ASSEMBLY
W/ 18" BASE = 488.0 LBS.
W/ 24" BASE = 476.5 LBS..
W/ 30" BASE = 447.0 LBS.

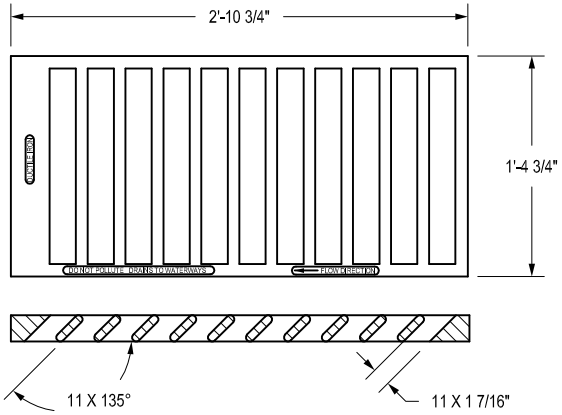

HIGH FLOW VANE GRATE

NOTES:
1. MATERIAL: DUCTILE IRON GRATE SHALL MEET H-20 LOAD.
2. RATING & CONFORMING TO ASTM A536 GRADE 70-50-05.
3. ALL CASTINGS ARE FURNISHED WITH BLACK PAINT.
4. SLOPE OF GRATE SURFACE IS 5.2%.
5. CURB INLET FRAME INSIDE VOLUME IS APPROX. 2.73 CU FT.

DETAIL NO.			REVISED	DETAIL NO.
543-2		2' X 3' CURB INLET DETAIL TYPE "A"		543-2

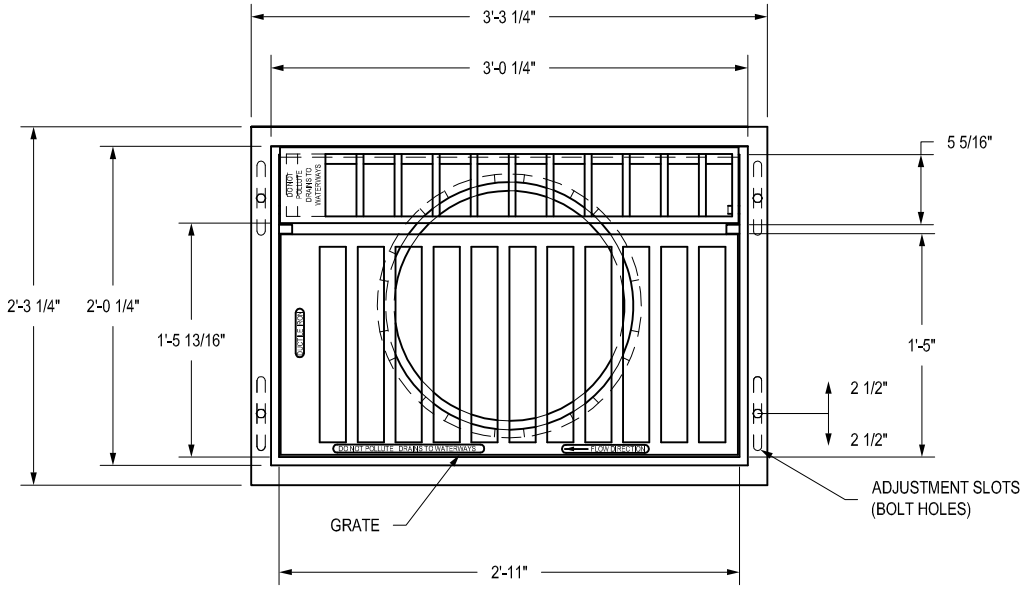

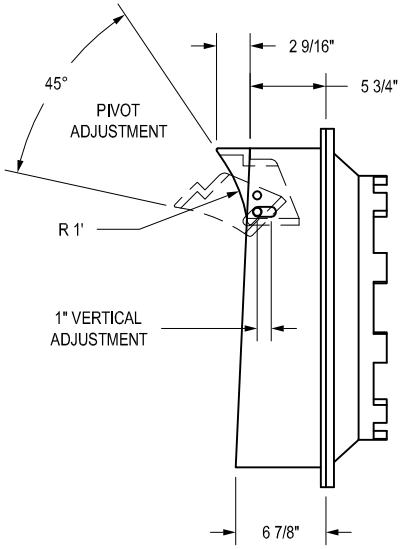

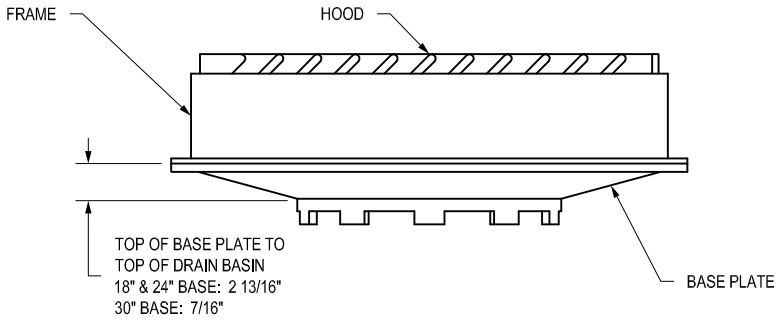

APPROX. DRAIN AREA OF DIAGONAL GRATE = 232.87 SQ IN.
APPROX. DRAIN AREA OF GRATE & HOOD = 307.14
APPROX. WEIGHT OF GRATE = 112.5 LBS.
APPROX. WEIGHT OF GRATE, FRAME & HOOD ASSEMBLY
W/ 18" BASE = 458.0 LBS.
W/ 24" BASE = 446.5 LBS..
W/ 30" BASE = 417 LBS.

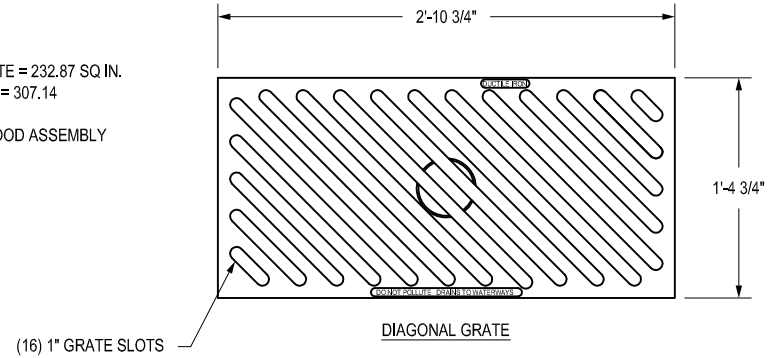

DIAGONAL GRATE

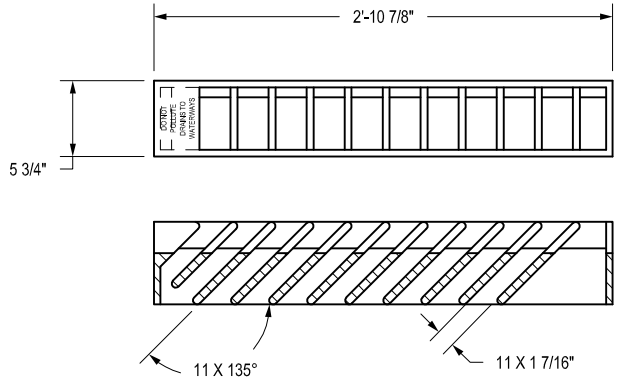

ROLL CURB INSERT LEFT OR RIGHT DIRECTION

APPROX. DRAIN AREA OF GRATE = 327.25 SQ IN.
APPROX. DRAIN AREA OF GRATE & HOOD = 401.52 SQ IN.
APPROX. WEIGHT OF GRATE = 123.0 LBS.
APPROX. WEIGHT OF GRATE, FRAME & HOOD ASSEMBLY
W/ 18" BASE = 468.5 LBS.
W/ 24" BASE = 457.0 LBS..
W/ 30" BASE = 427.5 LBS.

NOTES:
1. MATERIAL: DUCTILE IRON GRATE SHALL MEET H-20 LOAD.
2. RATING & CONFORMING TO ASTM A536 GRADE 70-50-05.
3. ALL CASTINGS ARE FURNISHED WITH BLACK PAINT.
4. SLOPE OF GRATE SURFACE IS 5.2%.
5. CURB INLET FRAME INSIDE VOLUME IS APPROX. 2.73 CU FT.

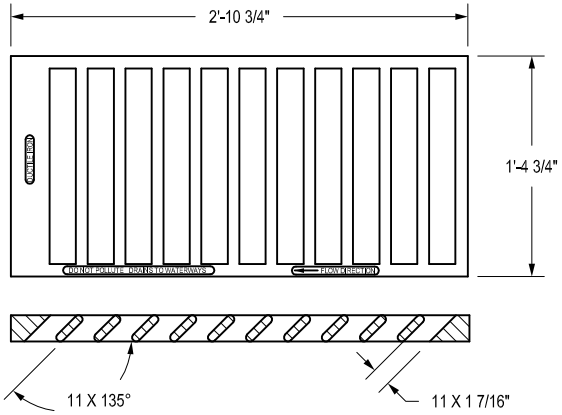

HIGH FLOW VANE GRATE

DETAIL NO.			REVISED	DETAIL NO.
543-5		2' X 3' CURB INLET DETAIL TYPE "B"		543-3

Include the following paragraph as new Section 601.4.10

601.4.10 Backfill for PVC Catch Basins: Backfill below and around PVC catch basins shall be placed in maximum 8-inch lifts and thoroughly compacted to at least 95% of maximum density when tested and determined by AASHTO T-99, Method A, with the percent of density adjusted in accordance with the rock correction procedure for maximum density determination, MAG Detail 190, to compensate for the rock content larger than that which will pass a No. 4 sieve.

SECTION 331

MICROSURFACING SPECIFICATIONS

331.1 GENERAL:

The work covered by this specification consists of furnishing all labor, equipment, and materials for the application of a "quick traffic solid/polymer microsurface."

This specification covers the equipment and construction procedures for rut filling and/or resurfacing of existing paved surfaces. The microsurface shall be a mixture of cationic polymer modified asphalt emulsion, mineral aggregates, mineral filler, water and other additives properly proportioned, mixed and spread on the pavement surface in accordance with this specification and as directed by the Engineer.

331.2 MATERIALS:

The Contractor shall supply all materials necessary for the performance of the work in accordance with the specifications. The asphalt emulsion, aggregate, and mineral filler shall be as specified in Section 714. Materials shall be approved by the Engineer prior to the start of construction. Certificates of Compliance will accompany each delivery of emulsion.

The Contractor shall be responsible for the safety of all materials of which he has taken delivery until they are in place on the road, and shall take all necessary precautions to avoid loss by fire or theft, or damage by water, and shall bear the cost of replacing any such material that is lost, spilt, destroyed or damaged after delivery.

331.3 PROPORTIONING:

The microsurface shall be proportioned in accordance with the mix design. Calibrated sign flowmeters shall be provided to measure both the addition of water and additives to the pugmill. Emulsion and cement flow shall be tied directly to aggregate flow. All additive flows shall be calibrated.

331.3.1 Performance: The microsurface mixture shall be proportioned per the mix design to ensure:

(A) Trafficability - the material will permit controlled traffic without damage to the surface within thirty (30) minutes and uncontrolled traffic without damage within sixty (60) minutes, per Section 331.4.2.2.

(B) Prevent development of bleeding, raveling, separation or other distress for seven (7) days after placing the microsurface.

331.4 MIX DESIGN:

331.4.1 General:

331.4.1.1: The Contractor shall provide a job mix formula from an approved laboratory and present certified test results for the Engineer's approval. Compatibility of the aggregate and polymer modified emulsion shall be certified by the emulsion manufacturer. All the materials used in the job mix formula shall be representative of the materials proposed by the Contractor for use in the project.

331.4.1.2: All the products used in the construction shall have certifications from the suppliers and they shall be given to the Engineer upon delivery to the project.

331.4.1.3: Mix design and proportioning will be approved by the Engineer prior to the start of the project.

331.4.2: Specifications:

331.4.2.1: The Engineer shall approve the mix design prior to use. The specification limits are as follows:

Residual Asphalt (ASTM D244)	6% - 11.5% by dry weight of aggregate
Mineral Filler (ASTM C136)	0.1% - 1% by dry weight of aggregate
Polymer Content/Type	4% min. (see Section 714.4)
Additive	As required for mix properties
Water	As required for mix properties
Aggregate Grading	Meets Section 331.4.2.4
Consistency (ISSA T-106)	2.5 to 3.0 cm
Traffic Time	See Section 331.4.2.2
Abrasion Loss (ISSA TB-100)	75 g/ft^2 maximum
Adhesion (ISSA TB-114)	90% minimum
Loaded Wheel Sand Adhesion	See Section 331.4.2.3

331.4.2.2 Modified Cohesion Test (ISSA TB-139): Furnish laboratory test data

showing the mix design to be trafficable thirty (30) minutes after application at 77°F conforming to the following criteria in accordance with test methods described in the applicable specifications.

Set Time Test: 30 minutes	12 kg-cm minimum.
Early Rolling Traffic Time: 60 minutes	20 kg-cm minimum.

331.4.2.3 Loaded Wheel Sand Adhesion Test (ISSA TB-109): Furnish laboratory test data showing the mix design conforming to the following criteria in accordance with test methods described in the appropriate specifications.

Vehicles/day	Minimum Sand Adhesion
0-30	70 g/ft^2
250-1500	60 g/ft^2
1500-3000	55 g/ft^2
greater than 3000	50 g/ft^2

331.4.2.4 The laboratory shall further report the quantitative effects of moisture content in the unit weight of the aggregate (bulking effect). The report must clearly show the theoretical recommended proportion of aggregate, mineral filler (Min. & Max.), water (Min. & Max.), additive(s), and asphalt, and how the proportions are based (dry aggregate weight, total mix, etc.).

331.5 TESTING:

Samples for quality assurance will be taken throughout the project per ISSA TB101 for testing by an approved laboratory as required by the Engineer. Materials with test results not meeting these specifications shall be corrected immediately. Testing shall be at the expense of the Agency for the following:

(A) Asphalt content
(B) Aggregate gradation
(C) Percent polymer content and type—certified by supplier

331.6 EQUIPMENT:

331.6.1 General:

All equipment, tools and machines used in the performance of this work shall be maintained in satisfactory working condition at all times to ensure a high quality product.
331.6.2 Mixing Equipment: The mixing machine shall be a self-propelled or truck

mounted mixing machine which shall be able to accurately deliver and proportion the aggregate, mineral filler, water, additive, and polymer-modified asphalt emulsion to a revolving multi-blade mixer capable of minimum speeds of 200 RPM and discharge the product on a continual flow basis. The machine shall have sufficient storage capacity for aggregate, polymer modified asphalt emulsion, mineral filler, water, and additive to maintain an adequate supply to the proportioning controls.

331.6.3 Material Control:

331.6.3.1 Calibration: Each mixing unit to be used in the performance of the work shall be calibrated prior to construction. Calibration data, if done within the calendar year, using the same material, may be used, providing a verification of the aggregate feed agrees.

Individual volume or weight controls for proportioning each material to be added to the mix shall be provided, and shall be accessible to the Engineer. Each material control device shall be calibrated prior to work and documented for inspection by the Engineer.

331.6.3.2 Aggregate Feed: The aggregate feed to the mixer shall be equipped with a revolution counter or similar device so the amount of aggregate used may be determined at any time.

331.6.3.3 Emulsion Pump: The emulsion pump shall be the positive displacement type with a jacketed housing for uniform heating. A revolution counter or similar device shall be fitted so that the amount of emulsion used may be determined at any time.

331.6.3.4 Fines Feeder: An approved fines feeder is required that will provide a uniform, positive, accurately metered range of 0 to 1 percent by dry aggregate weight. The fines feeder shall have a counter so the amount of mineral filler can be determined at any time.

331.6.3.5 Liquid Additive: The mixing machine shall be equipped with a liquid additive system that provides a pre-determined amount of additive to the mixing chamber. This additive system must be equipped with a counter that can determine the amount used at any time.

331.6.3.6 Water System: The mixing machine shall be equipped with a water system that provides a pre-determined amount of water to the mixing chamber. This water system must be equipped with a counter that can determine the amount used at any time.

331.6.4 Operator Controls: Controls will allow the operator to sequence and proportion the material per the mix design.

331.6.5 Spray Bars: The mixing machine shall be equipped with a water pressure system that provides a water spray immediately ahead of and outside the spreader box.

331.6.6 Spreading Equipment:

331.6.6.1: The paving mixture shall be spread uniformly by means of mechanical type laydown box attached to the mixer, equipped with agitation, to spread the materials throughout the box without any dead zones. The paddles shall be designed and operated so all the fresh mix will be agitated. Flexible seals, front and rear, shall be in contact with the road surface to prevent loss of mixture from the box. The spreader box shall be equipped with hydraulic cylinders for controlling the thickness of the spread mixture.

331.6.6.2: The rut filling spreader box shall have 6 to 8 skids to provide for leveling and filling uneven depressed areas. Two adjustable steel strike-off plates are required. The rear flexible seal shall act a final strike-off and shall be adjustable. The steel strike-offs shall be controlled by hydraulic cylinders placed at the rear of the spreader box.

331.6.6.3 The spreading equipment shall be maintained free from build-up of the mixture on the paddles or side walls. Skips, lumps, or tears will not be allowed in the finished product.

331.7 APPLICATION:

331.7.1 General: The microsurface shall be of the desired consistency when deposited in the spreader box and nothing more shall be added to it. The mixing time shall be sufficient to produce a complete and uniform coating of the aggregate and the mixture shall be chuted into the moving spreader box at a sufficient rate to maintain an ample supply across the full width of the strike-off squeegee at all times.

331.7.2 Weather: Microsurfacing shall not be placed if either the pavement or air temperature is below 50 degrees F and falling, but may be applied if both the air and pavement temperature are at least 45 degrees F and rising, and it is not raining.

331.7.3 Protection of Existing Surfaces: The Contractor shall take all necessary precautions to prevent microsurface or other material used from entering or adhering to gratings, hydrants, valve boxes, manhole covers, bridge or culvert decks, and other road fixtures. Immediately after resurfacing, the Contractor shall clean off any such material and leave any grating, manholes, etc. in a satisfactory condition.

331.7.4 Fogging Pavement: The surface shall be pre-wetted by fogging ahead of the spreader box. The rate should be adjusted as dictated by the pavement temperature, surface texture, humidity, and dryness of existing pavement.

331.7.5 Mix Stability: The mix shall possess sufficient stability so that premature breaking of material in the spreader box does not occur. The mixture shall be homogeneous during mixing and spreading; it shall be free of excess water or emulsion, and free of segregation of the emulsion and aggregate fines from the coarser aggregate.

331.7.6 Application Rate: The application rates, pounds per square yard of mix

specified, are average rates; the surface texture variation throughout the work will dictate the actual spreading rates. The strike-off squeegee shall be adjusted to provide a microsurface thickness which will completely fill the surface voids and provide an additional thickness not exceeding one and one-half times the largest top-size stone. The requirement of 1-1/2 stone depth does not apply to rut filling operations as these depths vary greatly according to the surface irregularities.

331.7.7 Joints: No excessive build-up or unsightly appearance shall be permitted on longitudinal or transverse joints. A maximum of 4.0" overlap will be permitted on longitudinal joints. The Contractor shall provide suitable width spreading equipment to produce a minimum number of longitudinal joints throughout the work. Half passes and odd width passes will be used in minimal amounts. If half passes are used, they cannot be the last pass on any area. Care shall be taken to ensure straight lines along curbs and shoulders. No runoff will be permitted on these areas.

Construction joints shall be neat in appearance and shall be tapered or feathered to conform to the existing surface. All excess material shall be removed from the surface upon completion of each run.

331.7.8 Handwork: Approved squeegees and lutes shall be used to spread the mixture in areas inaccessible to the spreader box and in other areas where hand spreading may be required.

331.7.9 Protection of the Microsurface: Adequate means shall be provided by the Contractor to protect the uncured product. Any damage done to the product shall be repaired at the Contractor’s expense.

331.7.10 Damage to the Microsurface: The Contractor’s responsibility to replace microsurface damaged by unexpected rain after spreading shall be limited to the period within four (4) hours of placement of the microsurface.

331.8 PAYMENT:

The micro-surfacing shall be paid for by the weight of the aggregate and weight of emulsified asphalt, as shown on certified weight tickets from the supplies delivered to the project, less weigh backs. The price shall be full compensation for furnishing, mixing and applying all materials; and for all labor, equipment, tools, design tests, and incidentals necessary to complete the job as specified herein.

Section 714

Microsurfacing Materials

714.1 GENERAL:

Microsurfacing materials shall consist of a properly proportioned mixture of cationic polymer modified asphalt emulsion, mineral aggregates, mineral filler, water, and other additives.

714.2 AGGREGATE:

714.2.1 Mineral Filler: Mineral filler, as required by the mix design, shall be any recognized brand of non-air-entrained Type I/II normal Portland cement that is free of lumps and clods, with a minimum of 85% passing the #200 sieve, added by weight of aggregate as specified by the mix design.

714.2.2 Mineral Aggregate: Mineral aggregate shall consist of sound, durable crushed stone or crushed gravel, per Section 701, and approved mineral filler. The material shall be free from vegetable matter and other deleterious substances. Aggregates shall be 100% crushed with no rounded particles. No natural sand will be allowed. The mineral aggregate shall conform to Table 715-1 for gradation only. Application rates shall be 18-24 pounds of aggregate/square yard for Type II, and 24-35 pounds/square yard for Type III.

The mineral aggregate and mineral filler shall have a sand equivalency value not less than 50 (ASTM D 2419) and be non-plastic.

If more than one kind of aggregate is used, the correct amount of each kind of aggregate needed to produce the required gradation shall be proportioned separately in a manner that will result in a uniform and homogeneous blend. The final blended aggregate shall meet the above requirements for grading, sand equivalency, and plasticity.

714.3 BITUMINOUS MATERIAL:

The Polymerized Emulsion is a slow-setting, cationic type emulsion for mixing applications and seal coats. A minimum of 4% saturated polymer shall be high sheared into the asphalt prior to the emulsification process. The Agency may choose to sample the polymerized asphalt for testing. The amount of polymer will be based on weight of polymer and asphalt (total weight) and be certified by the supplier. The polymerized emulsion will meet the following specifications listed in Table 714-1.

Table 714-1		
Polymerized Emulsion		
Test	AASHTO Method	Specification Limits
Tests on Emulsion		
Viscosity, SSF, @ 77°F. sec.	T-59	15-100
Sieve Test, %	T-59	0.30 Maximum
Particle Charge	T-59	Positive
Storage Stability, 24 hr. %	T-59	1.0 Maximum
Evaporation Residue, %	Arizona 512	60 Minimum
Tests on Evaporation Residue	Arizona 504	
Kinematic Viscosity 275°F.cst	T-201	650 Minimum
Penetration, 77°F 100g @ 5 sec	T-49	40-90
Softening Point, degrees F.	T-53	140 Minimum
Ductility, 77%, 5 cm/min.	T-51	60 Minimum
Tests on Evaporation Residue after RTFO		
Kinematic Viscosity, 275°F. aging ratio, cst	T-201	2.5 Maximum
Softening Point, degrees F.	T-53	140 Minimum
The emulsion, upon standing undisturbed for a period of twenty-four (24) hours, shall show no white or milky colored substance on its surface, and shall be a homogeneous brown color throughout.		

714.4 MODIFIER TYPE AND CONTENT:

The modifier shall be saturated. The use of latex type modifier will be allowed only if both the test results and field performance are accepted by the Engineer. The asphalt cement shall contain a minimum of 4% solid polymer by weight of asphalt residue, sheared into the asphalt prior to emulsification. Plant verification by the Agency, and certification of the polymer content and type by the supplier, will be required throughout the duration of the contract. Each tank of emulsion produced shall be certified as to its compliance with these specifications; this certification shall be provided to the Agency.

714.5 WATER:

Water shall be potable water, free of any injurious impurities. The Contractor shall identify the water source to the Agency.

714.6 ADDITIVES:

Additives may be used to accelerate or retard the breaking point and set times of the mix, or to improve the resulting finished surface.

The use of additives in the mix shall be supplied in quantities predetermined by the laboratory mix design.

714.7 TEST CERTIFICATES AND REPORTS:

Test certificates and reports for the bituminous material shall be furnished in accordance with Section 711.3.

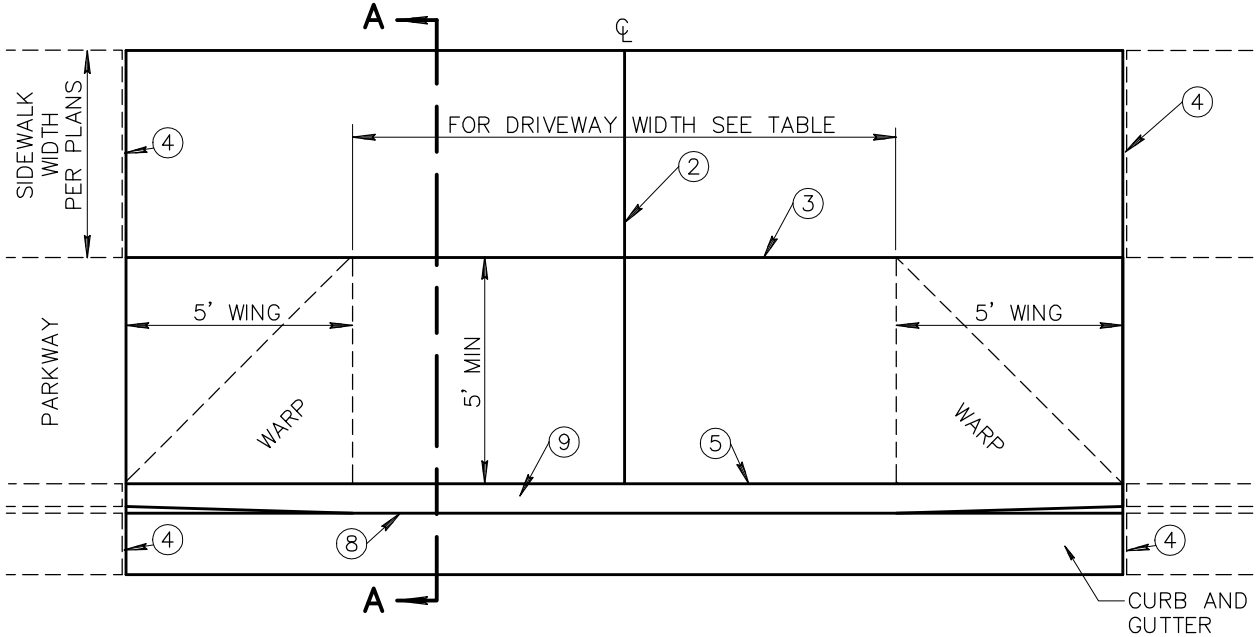

DRIVEWAY WITH DETACHED SIDEWALK

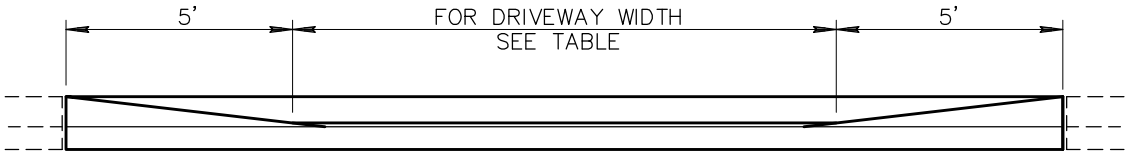

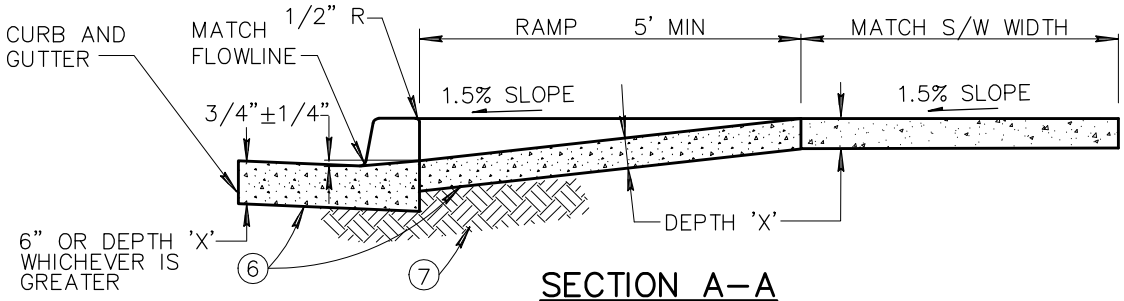

SECTION A–A

NOTES:

1. DEPRESSED CURB SHALL BE PAID FOR AT THE UNIT PRICE BID FOR THE TYPE OF CURB USED AT THAT LOCATION.
2. CONTRACTION JOINT ON D/W CENTERLINE.
3. CONTRACTION JOINT.
4. 1/2–INCH EXPANSION JOINTS SHALL COMPLY WITH SECTION 340.
5. BACK OF CURB – CONSTRUCTION JOINT.
6. CONCRETE CLASS AS NOTED IN TABLE. CONCRETE PER SECTION 725.
7. SUBGRADE PREPARATION, SECT. 301.
8. FLOW LINE OF GUTTER.
9. DEPRESSED CURB.
10. SECT. A–A AND ELEVATION: D/W SHOWN WITH VERTICAL CURB AND GUTTER, ROLL TYPE CURB AND GUTTER TREATED SIMILARLY.
11. ROUGH BROOM FINISH FULL WIDTH OF RAMP AND WINGS. TROWEL AND USE LIGHT HAIR BROOM FINISH FOR WALKWAY AREA.

COMMERCIAL AND INDUSTRIAL

DRIVEWAY WIDTH	MIN.	MAX.	CLASS	DEPTH 'X'
COMMERCIAL	✳ 16'	40'	A	9"
INDUSTRIAL	✳ 16'	40'	A	9"
✳24' MIN. FOR TWO WAY TRAFFIC				

RESIDENTIAL

DRIVEWAY WIDTH	MIN.	MAX.	CLASS	DEPTH 'X'
MAJOR STREET	16'	30'	B	5"
COLLECTOR STREET	* 12'	30'	B	5"
LOCAL STREET	12'	30'	B	5"
*16' DESIRABLE				

DETAIL NO.				REVISED	DETAIL NO.
250–1	MARICOPA ASSOCIATION of GOVERNMENTS	STANDARD DETAIL ENGLISH	DRIVEWAY ENTRANCES	01–01–2009	250–1

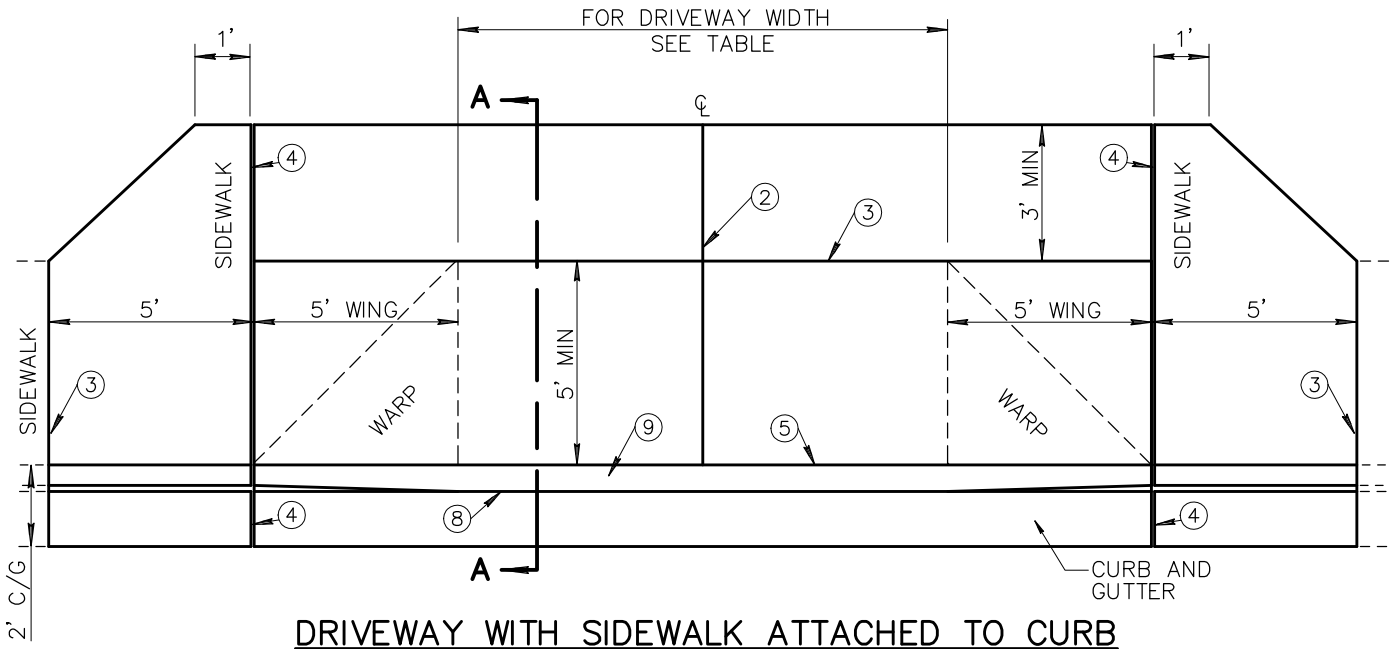

DRIVEWAY WITH SIDEWALK ATTACHED TO CURB

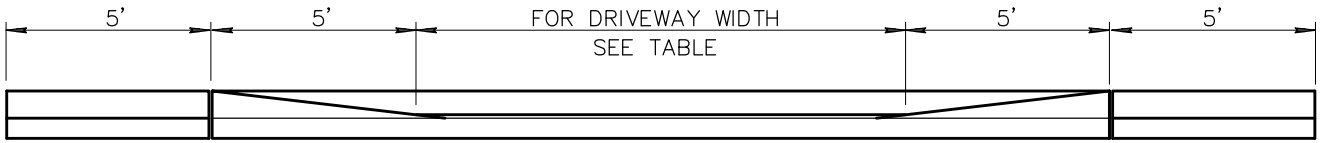

NOTES:

1. DEPRESSED CURB SHALL BE PAID FOR AT THE UNIT PRICE BID FOR THE TYPE OF CURB USED AT THAT LOCATION.
2. CONTRACTION JOINT ON D/W CENTERLINE.
3. CONTRACTION JOINT.
4. 1/2–INCH EXPANSION JOINTS SHALL COMPLY WITH SECTION 340.
5. BACK OF CURB – CONSTRUCTION JOINT.
6. CONCRETE CLASS AS NOTED IN TABLE. CONCRETE PER SECTION 725.
7. SUBGRADE PREPARATION, SECT. 301.
8. FLOW LINE OF GUTTER.
9. DEPRESSED CURB.
10. SECT. A–A AND ELEVATION: D/W SHOWN WITH VERTICAL CURB AND GUTTER, ROLL TYPE CURB AND GUTTER TREATED SIMILARLY.
11. ROUGH BROOM FINISH FULL WIDTH OF RAMP AND WINGS. TROWEL AND USE LIGHT HAIR BROOM FINISH FOR WALKWAY AREA.

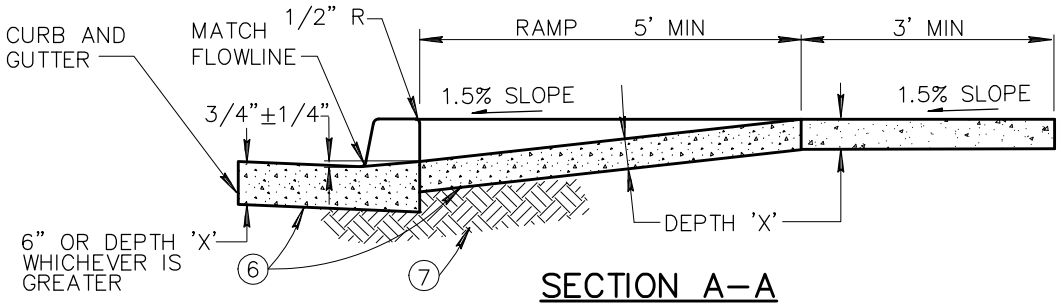

SECTION A–A

COMMERCIAL AND INDUSTRIAL				
DRIVEWAY WIDTH	MIN.	MAX.	CLASS	DEPTH 'X'
COMMERCIAL	✱ 16'	40'	A	9"
INDUSTRIAL	✱ 16'	40'	A	9"
✱24' MIN. FOR TWO WAY TRAFFIC				

RESIDENTIAL				
DRIVEWAY WIDTH	MIN.	MAX.	CLASS	DEPTH 'X'
MAJOR STREET	16'	30'	B	5"
COLLECTOR STREET	✱ 12'	30'	B	5"
LOCAL STREET	12'	30'	B	5"
✱16' DESIRABLE				

DETAIL NO.				REVISED	DETAIL NO.
250–2	MARICOPA ASSOCIATION of GOVERNMENTS	STANDARD DETAIL ENGLISH	DRIVEWAY ENTRANCES	01–01–2009	250–2