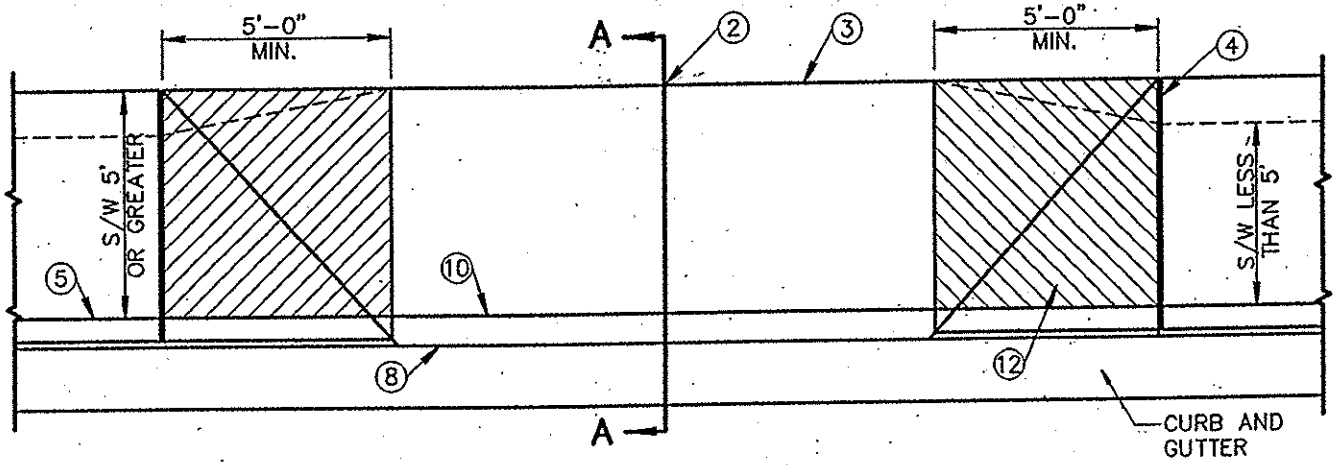

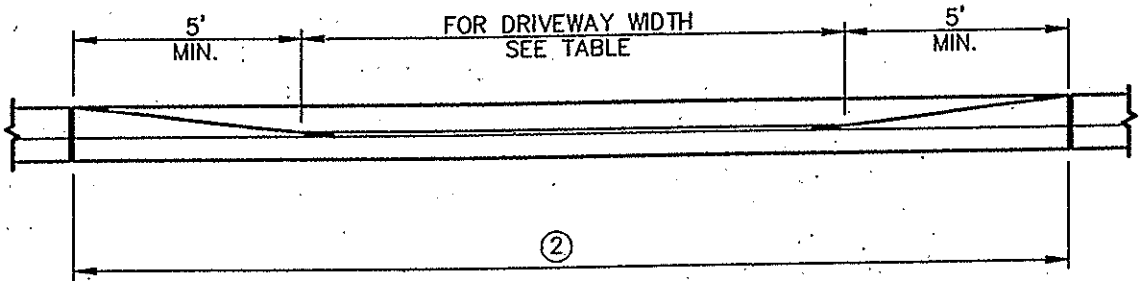

NOTES:

1. DEPRESSED CURB SHALL BE PAID FOR AT THE UNIT PRICE BID FOR THE TYPE OF CURB USED AT THAT LOCATION.
2. WHEN WIDTH EXCEEDS 22' PROVIDE A CONTRACTION JOINT ON D/W CENTERLINE.
3. BACK OF D/W OR FACE OF FUTURE S/W.
4. EXPANSION JOINTS SHALL COMPLY WITH SECTION 340.
5. BACK OF CURB – CONSTRUCTION JOINT OR SCORE MARK.
6. CLASS 'B' CONCRETE, SECT. 725.
7. SUBGRADE PREPARATION, SECT. 301.
8. FLOW LINE OF GUTTER.
9. DEPRESSED CURB.
10. SECT. A–A AND ELEVATION, D/W VERTICAL CURB AND GUTTER OR ROLL TYPE CURB AND GUTTER.
11. ROLL TYPE CURB AND GUTTER NOT PERMITTED IN THE CITY OF MESA
12. 1/4" GROOVES AT 1" O.C. FULL WIDTH OF 5' WARP SECTION, EACH SIDE OF DRIVEWAY. SEE DETAIL NO. 1 ON TYPE 'D' RAMP DETAIL NO. 234.

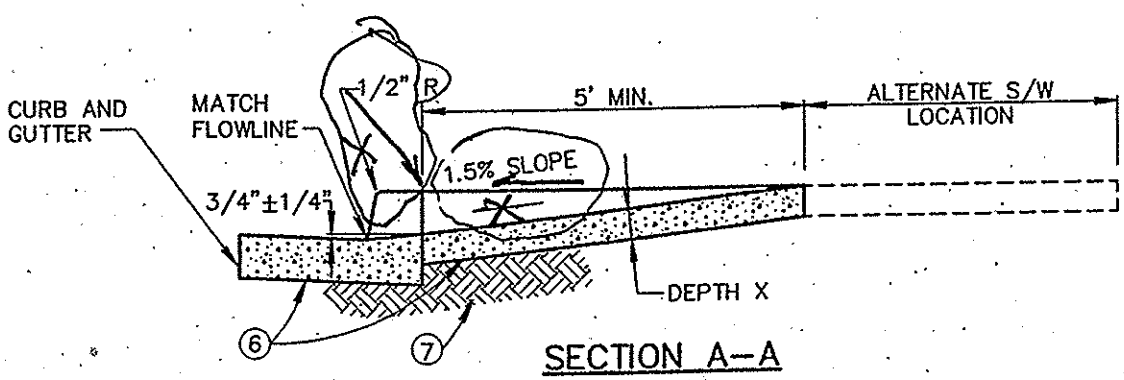

SECTION A–A

COMMERCIAL AND INDUSTRIAL				
DRIVEWAY WIDTH	MIN.	MAX.	CLASS	DEPTH X
COMMERCIAL	✱ 16'	40'	B	6"
INDUSTRIAL	✱ 16'	40'	B	6"
✱24' MIN. FOR TWO WAY TRAFFIC				

RESIDENTIAL				
DRIVEWAY WIDTH	MIN.	MAX.	CLASS	DEPTH X
MAJOR STREET	16'	30'	B	5"
COLLECTOR STREET	* 12'	30'	B	5"
LOCAL STREET	12'	30'	B	5"
*16' DESIRABLE				

DETAIL NO.				REVISED	DETAIL NO.
250	MARICOPA ASSOCIATION of GOVERNMENTS	STANDARD DETAIL ENGLISH	DRIVEWAY ENTRANCES	01-01-2005	250