MARICOPA COUNTY
Department of Transportation

MEMORANDUM

Date: June 2, 2010

To: MAG Specifications and Details Committee

From: Robert Herz, MCDOT Representative

Subject: Miscellaneous Bloopers **Case 10-01 D**

PURPOSE: Correct corrupted note on detail 221.

REVISION: Note 1. located under Curb and Gutter Transitions is to be revised as follows:

1. TRANSITIONS WILL BE PAID FOR AS THE PREDOMINANT TYPE OF CURB AND GUTTER BEING TRANSITIONED. WHEN TYPE 'A' CURB AND GUTTER ARE USED AT CURB RETURNS AND TYPE 'C' CURB AND GUTTER IS PREDOMINANTLY USED ELSEWHERE, THE TYPE 'A' TO TYPE 'C' TRANSITIONS SHALL BE MEASURED AND PAID FOR AS TYPE 'C' CURB AND GUTTER.

2901 West Durango Street Phoenix, Arizona 85009 Phone: 602-506-4760 Fax: 602-506-5969

CURB TRANSITION TYPE 'A' TO TYPE 'C'

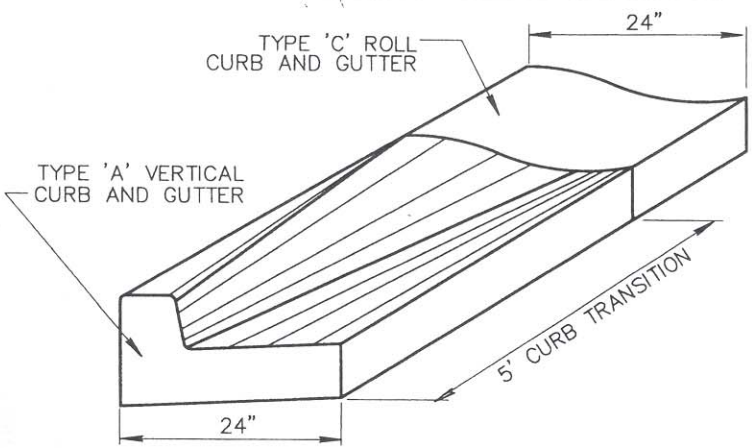

CURB AND GUTTER TRANSITION

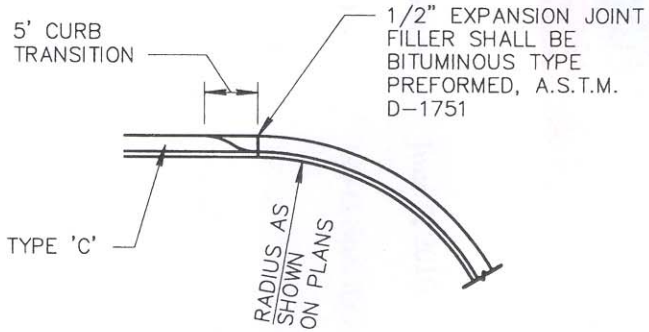

INTEGRAL ROLL CURB, GUTTER AND SIDEWALK

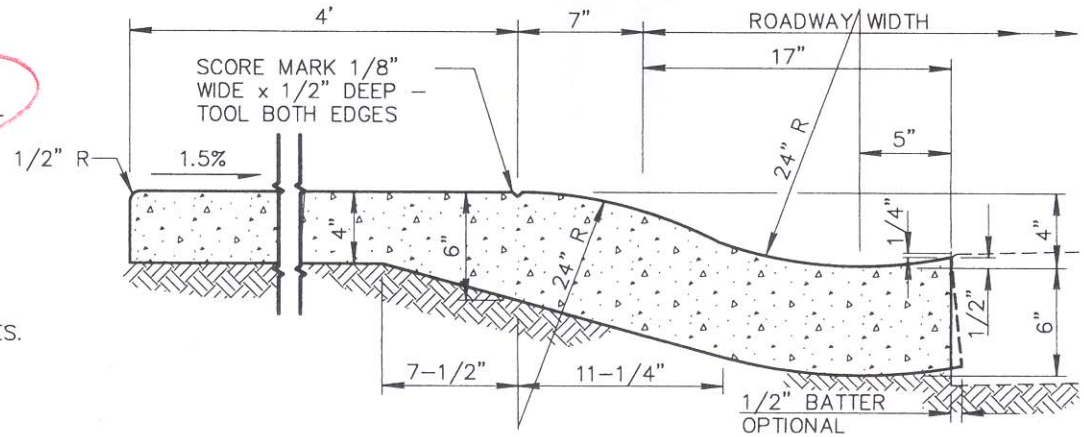

NOTES: (CURB AND GUTTER TRANSITIONS)

1. THE CURB TRANSITION WILL BE PAID FOR AS TYPE 'C'. WHEN A PROJECT RETURN AND GUTTER THROUGHOUT, THE ENTIRE RETURN AND GUTTER THROUGHOUT, THE ENTIRE RETURN SHALL BE MEASURED AND PAID FOR AS TYPE 'A'.
2. WHERE PROPOSED CONSTRUCTION IS TO BE CONNECTED TO EXISTING CURB AND GUTTER, THE TRANSITION SHALL BE INDICATED ON PLANS.
3. CLASS 'B' CONCRETE PER SECT. 725.
4. TRANSITION BETWEEN TYPICAL SECTIONS SHALL BE ACCOMPLISHED BY THE USE OF DIRECT STRAIGHT LINE TRANSITIONS OF THE FLOW LINE AND OTHER SURFACE FEATURES.

BAD NOTE TO BE REPLACED

NOTES: (INTEGRAL ROLL CURB, GUTTER AND SIDEWALK)

1. CONCRETE TO BE MONOLITHIC POUR. EXPOSED SURFACE FINISH AS PER SIDEWALK AND GUTTER DETAIL.
2. CONTRACTION JOINT SPACING 5' MAXIMUM.
3. EXPANSION JOINTS PER SECT. 340.
4. CLASS 'B' CONCRETE PER SECT. 725.

DETAIL NO.				REVISED	DETAIL NO.
221	MARICOPA ASSOCIATION of GOVERNMENTS	STANDARD DETAIL ENGLISH	CURB AND GUTTER TRANSITION TYPE A TO TYPE C INTEGRAL ROLL CURB, GUTTER AND SIDEWALK	01-01-2008	221