Transforming the Nation's Power Grid to a Smart Grid to Support Renewable Energy Systems

Raja Ayyanar
School of Electrical, Computer and Energy Engineering
Arizona State University

Electric Vehicle (EV) Charging Infrastructure Workshop
December 10, 2009

Electric Power and Energy program at ASU

- ASU has one of the largest electric power programs in US with 9 faculty members

- ASU is the lead school of the NSF Power Systems Engineering Research Center (PSERC) - a consortium of 13 universities and about 40 industries (www.pserc.org) involved in research on all aspects of electric grid

- ASU is a major partner school in another NSF ERC – Future Renewable Electric Energy Delivery and Management (FREEDM) led by NCSU and focusing on smart grid technologies (www.freedm.ncsu.edu)

ASU Ira A. FULTON school of engineering

Relevant AZ-centric Solar PV projects at ASU

- Az SMART – AZ Solar Market Analysis and Research Tool
  - Sponsors: Science Foundation of AZ, APS, SRP, Bright Source Energy

- DOE/ARRA funded project led by APS to study the impact and design of High PV penetration in Flagstaff
  - >30% penetration; mix of residential, commercial and utility scale PV with smart inverter
  - Design of distribution protection and control under high PV penetration
  - Extensive monitoring and communication features

ASU Ira A. FULTON school of engineering

Smart Grid (energy internet)

- Distinguished by two-way flow of electricity and information, and high level of consumer interaction
- Essential for high penetration of renewable energy (per RES)
- Major share of $40B Stimulus funds for energy projects
- Features of smart grid (per EISA)
  - Increased use of digital information and controls technology to improve reliability, security, and efficiency of the electric grid
  - Dynamic optimization of resources with full cyber-security
  - Deployment and integration of distributed and renewable resources
  - Incorporation of demand response and energy efficiency resources
  - Deployment of "smart" technologies for metering, distribution automation
  - Deployment and integration of storage including plug-in electric and hybrid electric vehicles

www.oe.energy.gov/SmartGridIntroduction.htm

- Not just ‘smart meter’ but covers all aspects of electric power system – generation, transmission, distribution and end use

Smart Grid: Bulk transmission systems

- Challenges with renewable resources
  - Intermittency and uncertainty
  - Remote location far from existing transmission network
  - Stability constraints and power flow congestion
- New EHV AC and DC transmission networks
- Advanced Power Electronics based Flexible AC Transmission Systems (FACTS) and distributed FACTS
- Vast network of sensors - GPS based SynchroPhasors, and Wide area control using this information
- Large scale storage – pumped hydro, compressed air, …
- New grid operation (unit commitment, economic dispatch) algorithms and control incorporating weather forecast, storage and advanced FACTS devices

Smart Grid: Distribution systems

Legacy grid:

- Radial distribution system with one-way power flow
- High penetration DG leads to problems with grid operation, protection, safety
- Little interaction with customers
- Low capacity value for PV, other renewable resources

Smart grid:

- Advanced metering infrastructure (AMI, smart meters)
- Active consumer participation, effective demand response
- Distribution automation
- Networked distribution system, solid state fault protection
- EV, PHEV, other distributed storage and management
- High capacity value for PV
- Microgrids

Universal energy management system (UEMS)

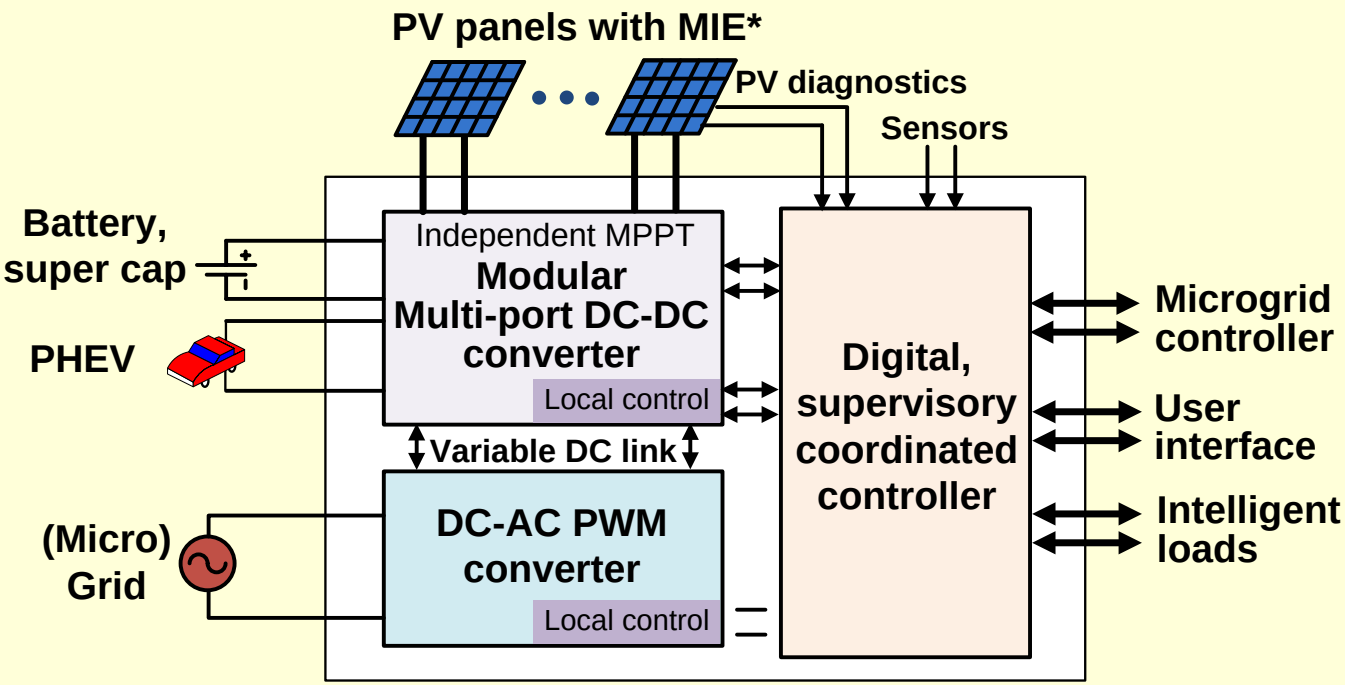

Universal energy management system (UEMS)

* MIE – Module integrated electronics

- UEMS functionalities
  - Energy portal
  - DER – Grid interface
  - PHEV and other storage management
  - Intelligent load management
  - On-demand active and reactive power support to grid
  - Maximize PV energy harvest
  - Power factor control
  - Power quality

Solar residential microgrid

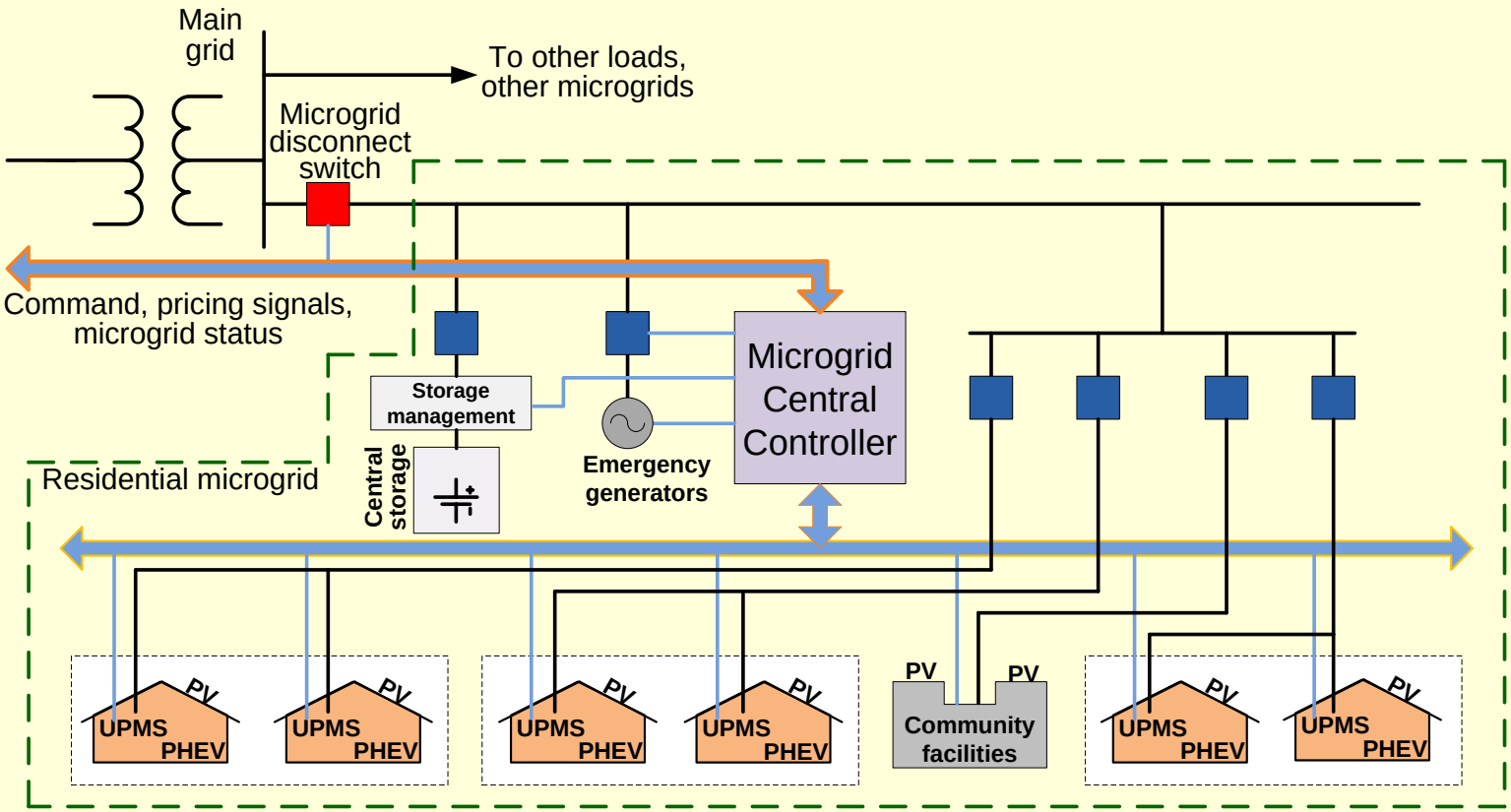

- Single point of connection with grid
- Islanded operation with local generation, storage and UEMS
- Semi-autonomous power system with extensive communication
- Active and reactive power support to grid
- Significant reduction in required T&D infrastructure (high PV capacity value)

Synergy in PHEV and microgrid

PHEV	Residential PV Microgrid
Reduction in net emission possible only if electric charging is from low emission sources	UEMS optimizes the energy management such that PHEV charging is substantially from PV, minimizing emission
Existing T&D infrastructure can support PHEV only if charging can be controlled, and done during off-peak	UEMS and other 'smart chargers' ensure charging is done in the 'valley fill' mode requiring minimal T&D upgrade
Significant storage available on board (~ 20 kWh)	Storage required to support optimal energy management, and to provide grid support
Total generation capacity of all US vehicles is 20 times the total electric generation capacity in US (998 GW); available for vehicle to grid mode with flexible fuel options	Emergency generation capacity critical when solar energy is not available for long durations (for example, a few days of low insolation) to achieve high capacity value

ASU Ira A. Fulton school of engineering