2018 Revision to the

2015 Edition

Uniform Standard Specifications and Details for Public Works Construction

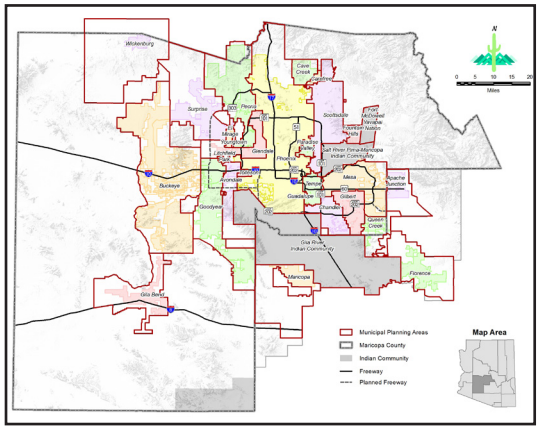

Sponsored and Distributed by the

MARICOPA ASSOCIATION of GOVERNMENTS

January 2018

NEW IN THE 2018 REVISION

Uniform Standard Specifications and Details for Public Works Construction—2018 Revision to the 2015 Edition
The MAG Standard Specifications and Details Committee, with assistance from four specialized working groups, considered 15 cases during the 2017 session. Of these, 13 were approved and included in this revision.

New Specifications:
- Section 323: Placement of Pervious Concrete
- Section 723: Pervious Concrete

Specifications rewritten, or with major updates:
- Section 337: Crack Sealing
- Section 415: Flexible Metal Guardrail
- Section 630: Tapping Sleeves, Valves and Valve Boxes on Water Lines

Specifications with minor updates:
- Section 105: Control of Work
- Section 310: Placement and Construction of Aggregate Base Course
- Section 321: Placement and Construction of Asphalt Concrete Pavement
- Section 331: Microsurfacing Specifications
- Section 340: Concrete Curb, Gutter, Sidewalk, Curb Ramps, Driveway and Alley Entrance
- Section 604: Placement of Controlled Low Strength Material
- Section 725: Portland Cement Concrete
- Section 726: Concrete Curing Materials
- Section 728: Controlled Low Strength Material
- Section 729: Expansion Joint Filler

New detail drawings:
- Detail 236-4: 25’-35’ R - RADIAL COMBINATION CURB RAMP
- Detail 236-5: 25’-35’ R - RADIAL PARALLEL CURB RAMP
- Detail 238-1: PERPENDICULAR CURB RAMP (Revised from previous Detail 235-4)
- Detail 238-2: COMBINATION CURB RAMP (Revised from previous Detail 235-5)
- Detail 238-3 PARALLEL CURB RAMP

Details that have been updated:
- Detail 100-1: INDEX (Page 1 of 2)
- Detail 100-2: INDEX (Page 2 of 2)
- Detail 206-1: CONCRETE SCUPPER
- Detail 221: CURB AND GUTTER TRANSITION AND INTEGRAL ROLL CURB, GUTTER AND SIDEWALK
- Detail 236-1: 25’-35’ R - RADIAL CURB RAMP W/ ATTACHED SIDEWALK
- Detail 236-2: 25’-35’ R - RADIAL CURB RAMP W/ DETACHED SIDEWALK
- Detail 236-3: 20’ R - RADIAL CURB RAMP W/ ATTACHED SIDEWALK
- Detail 237-1: 25’-35’ R - DIRECTIONAL CURB RAMP W/ ATTACHED SIDEWALK
- Detail 237-2: 25’-35’ R - DIRECTIONAL CURB RAMP W/ DETACHED SIDEWALK
- Detail 237-3: 20’ R - DIRECTIONAL CURB RAMP W/ ATTACHED SIDEWALK
- Detail 260: RETROFIT DRIVEWAY OR ALLEY ENTRANCE (WITH 2” ROLL CURB AND GUTTER)
- Detail 390: CURB STOP WITH FLUSHING PIPE
- Detail 391-1: VALVE BOX INSTALLATION AND GRADE ADJUSTMENT
- Detail 422: MANHOLE FRAME AND COVER ADJUSTMENT
- Detail 503: IRRIGATION STANDPIPE
- Detail 505: CONCRETE COLLAR FOR PIPE

Details that have been deleted:
- Detail 235-1 through 235-5: Single ramp details have been incorporated as options in the 236 RADIAL series and 237 DIRECTIONAL series. Midblock ramps have been moved to a new 238 series.

Title VI Notice to the Public
Maricopa Association of Governments

The Maricopa Association of Governments (MAG) hereby gives public notice that it is the policy of the agency to assure full compliance with Title VI of the Civil Rights Act of 1964, the Civil Rights Restoration Act of 1987, Executive Order 12898 on Environmental Justice, and related statutes and regulations in all programs and activities. Title VI requires that no person in the United States of America shall, on the basis of actual or perceived race, color, or national origin, be excluded from the participation in, be denied the benefits of, or be otherwise subjected to discrimination under any program or activity for which MAG receives federal financial assistance. Additional protections are provided in other federal and state statutes for discrimination based on religion, sex, disability, age, gender identity (as defined in paragraph 249(c)(4) of title 18, United States Code) or sexual orientation.

Any person who believes they have experienced discrimination under Title VI has a right to file a formal complaint with MAG. Any such complaint must be filed with MAG’s Title VI Coordinator within 180 days following the date of the alleged discriminatory occurrence.
[Complaints should, at a minimum, include the following information:
- Your name and address, and a number at which you can be reached during business hours
- A general description of the person(s) injured by the alleged discriminatory acts
- A description of the alleged discriminatory act(s) in sufficient detail to enable the Title VI Coordinator to understand what occurred, when it occurred, and the basis of the alleged discrimination complaint (race, color, national origin, etc.)
- The letter must be signed and dated by the person filing the complaint or by someone authorized to do so on his or her behalf.]

For more information, or to file a complaint, please contact the Title VI Coordinator at (602) 254-6300.

Changes made in the 2017 Revision

Uniform Standard Specifications and Details for Public Works Construction—2017 Revision to the 2015 Edition
The MAG Standard Specifications and Details Committee, with assistance from five specialized working groups, considered 20 cases during the 2016 session. Of these, 16 were approved and included in this revision.

New Specifications:
- Section 326: Placement and Construction of Polymer Modified Asphalt Concrete
- Section 719: Polymer Modified Asphalt Concrete

Specifications rewritten, or with major updates:
- Section 106: Control of Materials
- Section 309: Lime Stabilization or Modification of Subgrade
- Section 340: Concrete Curb, Gutter, Sidewalk, Curb Ramps, Driveway and Alley Entrance
- Section 710: Asphalt Concrete
- Section 717: Asphalt-Rubber Asphalt Concrete
- Section 727: Steel Reinforcement

Specifications with minor updates:
- Section 310: Placement and Construction of Aggregate Base Course
- Section 322: Decorative Asphalt
- Section 331: Microsurfacing Specifications
- Section 415: Flexible Metal Guardrail
- Section 505: Concrete Structures
- Section 608: Horizontal Directional Drilling
- Section 616: Reclaimed Water Line Construction
- Section 711: Paving Asphalt
- Section 725: Portland Cement Concrete
- Section 729: Expansion Joint Filler
- Section 772: Chain Link Fence
- Section 796: Geosynthetics

New detail drawings:
- Detail 236-1: DUAL CURB RAMP (RADIAL, 25’-35’ R) ATTACHED SIDEWALK
- Detail 236-2: DUAL CURB RAMP (RADIAL, 25’-35’ R) DETACHED SIDEWALK
- Detail 236-3: DUAL CURB RAMP (RADIAL, 20’ R) ATTACHED SIDEWALK
- Detail 237-1: DUAL CURB RAMP (DIRECTIONAL, 25’-35’ R) ATTACHED SIDEWALK
- Detail 237-2: DUAL CURB RAMP (DIRECTIONAL, 25’-35’ R) DETACHED SIDEWALK
- Detail 237-3: DUAL CURB RAMP (DIRECTIONAL, 20’ R) ATTACHED SIDEWALK
- Detail 271: SQUARE FRAME AND COVER AND GRADE ADJUSTMENT
- Detail 310: STEEL WATER METER BOX COVER *(Replaces Detail 310: CAST IRON WATER METER BOX COVER NO. 1)*
- Detail 315: POLYMER CONCRETE WATER METER BOX COVER
- Detail 319: TRAFFIC RATED BOX AND COVER
- Detail 393: WATER VALVE EXTENSION

Details that have been updated:
- Detail 100-1: INDEX (Page 1 of 2)
- Detail 100-2: INDEX (Page 2 of 2)
- Detail 251: RETURN TYPE DRIVEWAYS
- Detail 270: FRAME AND COVER AND GRADE ADJUSTMENT
- Detail 320: NON TRAFFIC RATED WATER METER BOXES
- Detail 391-1: VALVE BOX INSTALLATION AND GRADE ADJUSTMENT
- Detail 391-2: VALVE BOX INSTALLATION AND GRADE ADJUSTMENT
- Detail 507: ENCASED CONCRETE PIPE (FOR SHALLOW INSTALLATION)

Details that have been deleted:
- Detail 310 - 314: CAST IRON WATER METER BOX COVER NO. 1-5

Changes made in the 2016 Revision

Uniform Standard Specifications and Details for Public Works Construction—2016 Revision to the 2015 Edition
The MAG Standard Specifications and Details Committee, with assistance from five specialized working groups, considered 18 cases during the 2015 session. Of these, 14 were approved and included in this revision.

New Specifications:
- Section 322: Decorative Asphalt
- Section 608: Horizontal Directional Drilling

Specifications rewritten, or with major updates:
- Section 321: Placement and Construction of Asphalt Concrete Pavement
- Section 336: Pavement Matching and Surfacing Replacement
- Section 342: Interlocking Concrete Paver Installations
- Section 602: Trenchless Installation of Steel Casing
- Section 718: Preservative Seal for Asphalt Concrete

Specifications with minor updates:
- Section 325: Placement and Construction of Asphalt-Rubber Asphalt Concrete Pavement
- Section 334: Preservative Seal for Asphalt Concrete
- Section 345: Adjusting Frames, Covers and Valve Boxes
- Section 601: Trench Excavation, Backfilling and Compaction
- Section 625: Manhole Construction and Drop Sewer Connections
- Section 710: Asphalt Concrete
- Section 717: Asphalt-Rubber Asphalt Concrete
- Section 735: Reinforced Concrete Pipe
- Section 771: Galvanizing
- Section 772: Chain Link Fence

Specifications that have been deleted:
- Section 744: ABS Truss Pipe and Fittings

Details that have been updated:
- Detail 145: SAFETY RAIL
- Detail 200-1: TRENCH BACKFILL AND SURFACE REPLACEMENT
- Detail 200-2: TRENCH BACKFILL AND SURFACE REPLACEMENT
- Detail 225: INTERLOCKING CONCRETE PAVERS
- Detail 270: FRAME AND COVER AND GRADE ADJUSTMENT

Changes made in the 2015 Edition

Uniform Standard Specifications and Details for Public Works Construction—2015 Edition
The MAG Standard Specifications and Details Committee considered 22 cases during the 2014 session. Of these, 18 were approved and included in this revision.

New Specifications:
- Section 607: Trenchless Installation of Smooth Wall Jacking Pipe
- Section 742: Precast Manhole

Specifications rewritten, or with major updates:
- Section 101: Abbreviations and Definitions
- Section 321: Placement and Construction of Asphalt Concrete Pavement
- Section 324: Portland Cement Concrete Pavement
- Section 325: Placement and Construction of Asphalt-Rubber Asphalt Concrete Pavement
- Section 405: Monuments
- Section 601: Trench Excavation, Backfilling and Compaction
- Section 610: Water Line Construction
- Section 611: Water, Sewer and Storm Drain Testing *(was Disinfecting Water Mains)*
- Section 615: Sewer Line Construction
- Section 618: Storm Drain Construction
- Section 625: Manhole Construction and Drop Sewer Connections
- Section 735: Reinforced Concrete Pipe

Specifications with minor updates:
- Section 107: Legal Regulations and Responsibility to Public
- Section 206: Structure Excavation and Backfill
- Section 211: Fill Construction
- Section 310: Placement and Construction of Aggregate Base Course
- Section 336: Pavement Matching and Surfacing Replacement
- Section 340: Concrete Curb, Gutter, Sidewalk, Sidewalk Ramps, Driveway and Alley Entrance
- Section 342: Decorative Pavement, Concrete Paving Stone
- Section 345: Adjusting Frames, Covers, Valve Boxes, Meter Boxes and Pull Boxes
- Section 355: Utility Potholes-Keyhole Method
- Section 616: Reclaimed Water Line Construction
- Section 710: Asphalt Concrete
- Section 717: Asphalt-Rubber Asphalt Concrete
- Section 726: Concrete Curing Materials
- Section 739: Steel Reinforced Polyethylene Pipe and Fittings for Storm Drain, Irrigation and Sanitary Sewer
- Section 740: Polypropylene Pipe and Fittings for Storm Drain, Irrigation and Sanitary Sewer
- Section 750: Iron Water Pipe and Fittings
- Section 775: Brick and Concrete Masonry Units (Blocks)

Specifications that have been deleted:
- Section 603: Installation for High Density Polyethylene Pipe *(Incorporated into Section 601.)*

New detail drawings:
- Detail 420-1: CONCRETE SANITARY SEWER MANHOLE *(Replaces existing 420-1: Precast Concrete Sewer Manhole)*
- Detail 420-2: PRECAST MANHOLE BASE
- Detail 420-3: CONCRETE MANHOLE BASE *(Replaces parts of existing 420-2 and adds details.)*

Details that have been updated:
- Detail 100-1: INDEX (Page 1 of 2)
- Detail 100-2: INDEX (Page 2 of 2)
- Detail 120: SURVEY MARKER
- Detail 200-1: BACKFILL, PAVEMENT AND SURFACE REPLACEMENT
- Detail 200-2: BACKFILL, PAVEMENT AND SURFACE REPLACEMENT
- Detail 212: UTILITY POTHOLE REPAIR
- Detail 391-1: VALVE BOX INSTALLATION AND GRADE ADJUSTMENT
- Detail 391-2: VALVE BOX INSTALLATION AND GRADE ADJUSTMENT
- Detail 392: DEBRIS CAP INSTALLATION
- Detail 421: OFFSET MANHOLE 8” TO 30” PIPE
- Detail 422: MANHOLE FRAME AND COVER ADJUSTMENT
  Detail 429: INDUSTRIAL WASTE CONTROL VAULT WITH MANHOLE
- Detail 522: STORM DRAIN MANHOLE SHAFT
- Detail 552: FORD CROSSING AND CUT-OFF WALLS

Details that have been deleted:
- Detail 428: MANHOLE STEPS

UNIFORM STANDARD SPECIFICATIONS for PUBLIC WORKS CONSTRUCTION

SPONSORED and DISTRIBUTED by the

MARICOPA ASSOCIATION of GOVERNMENTS

2018 Revision to the 2015 Edition

ARIZONA

FOREWORD

Publication of these Uniform Standard Specifications and Details for Public Works Construction fulfills the goal of a group of agencies who joined forces in 1966 to produce such a set of documents. Subsequently, in the interest of promoting county-wide acceptance and use of these standards and details, the Maricopa Association of Governments accepted their sponsorship and the responsibility of keeping them current and viable.

These specifications and details, representing the best professional thinking of representatives of several Public Works Departments, reviewed and refined by members of the construction industry, were written to fulfill the need for uniform rules governing public works construction performed for Maricopa County and the various cities and public agencies within Maricopa County who could not afford to promulgate such standards for themselves. Agencies in other regions or climes that desire to use these specifications may need to make adjustments for local conditions.

A uniform set of specifications and details, updated and embracing the most modern materials and construction techniques will reduce conflicts, provide clarity and lower construction costs for the benefit of the public.

Use of these standards for projects outside of the right-of-way should be reviewed by professional engineers and architects and applied with care to insure relevance to the planned work.

Specifications and details should be incorporated into project plans and specifications after careful review by the design engineer or architect of specific project needs. Not all specifications contained herein will apply to all projects. Prepared plans and specifications should clearly call out only those specific uniform specifications and details required for the project.

Uniform specifications and details are not a substitute for good engineering judgment. Unique conditions will arise that are outside the scope of these standards. When this happens, professional engineers and architects are required to use their judgment to amend these standards to best meet site-specific project needs in accordance with the rules set forth by the State of Arizona and policy statements made by the Arizona State Board of Technical Registration.

The Uniform Standard Specifications and Details for Public Works Construction are revised periodically and reprinted to reflect the changing technology of the construction industry. To this end a Specifications and Details Committee has been established as a permanent organization to continually study and recommend changes to the Specifications and Details. Interested parties may address suggested changes and questions to:

Standard Specifications & Details Committee
c/o Maricopa Association of Governments
302 North First Avenue, Suite 300
Phoenix, Arizona, 85003

Suggestions will be reviewed by the committee and appropriate segments of the construction industry and revisions will be published the first of each year. A copy of this publication is available for review on the internet at the website listed below. Please follow the links to the publications page and look for *Uniform Standard Specifications for Public Works Construction and/or Uniform Standard Details for Public Works Construction*:

www.azmag.gov

In the interest of regional uniformity, it is hoped that all using agencies will adopt these standards with minimal changes. It is recognized that because of charter requirements and for other reasons, some agencies will find it necessary to modify or supplement certain requirements. In the interest of regional uniformity, it is strongly recommended that using agencies bring desired modifications to the MAG Committee for consideration and inclusion into these standards.

TABLE OF CONTENTS

PART 100 - GENERAL CONDITIONS

Section	Last Revised	Title	Page
101	2015	Abbreviations and Definitions	101-1
102	2008	Bidding Requirements and Conditions	102-1
103	1999	Award and Execution of Contract	103-1
104	2012	Scope of Work	104-1
105	2018	Control of Work	105-1
106	2017	Control of Materials	106-1
107	2015	Legal Regulations and Responsibility to Public	107-1
108	2014	Commencement, Prosecution and Progress	108-1
109	2011	Measurements and Payments	109-1
110	2000	Notification of Changed Conditions and Dispute Resolution	110-1

PART 200 - EARTHWORK

Section	Last Revised	Title	Page
201	1999	Clearing and Grubbing	201-1
205	1998	Roadway Excavation	205-1
206	2015	Structure Excavation and Backfill	206-1
210	2009	Borrow Excavation	210-1
211	2015	Fill Construction	211-1
215	1998	Earthwork for Open Channels	215-1
220	2012	Riprap Construction	220-1
230	2010	Dust Palliative Application	230-1

PART 300 - STREETS AND RELATED WORK

Section	Last Revised	Title	Page
301	2014	Subgrade Preparation	301-1
306	2010	Mechanically Stabilized Subgrade- Geogrid Reinforcement	306-1
309	2017	Lime Stabilization or Modification of Subgrade	309-1
310	2018	Placement and Construction of Aggregate Base Course	310-1
311	2014	Placement and Construction of Cement Treated Subgrade	311-1
312	2012	Cement Treated Base	312-1
315	1998	Bituminous Prime Coat	315-1
317	2013	Asphalt Milling	317-1
320	1999	Road-Mixed Surfacing	320-1
321	2018	Placement and Construction of Asphalt Concrete Pavement	321-1
322	2017	Decorative Asphalt	322-1
323	2018	Placement of Pervious Concrete	323-1
324	2015	Portland Cement Concrete Pavement (PCCP)	324-1
325	2016	Placement and Construction of Asphalt-Rubber Asphalt Concrete	325-1
326	2017	Placement and Construction of Polymer Modified Asphalt Concerte	326-1
327	2012	Hot In-Place Recycling	327-1
329	1998	Tack Coat	329-1
330	1998	Asphalt Chip Seal	330-1
331	2018	Microsurfacing Specifications	331-1
332	2013	Placement and Construction of Asphalt Emulsion Slurry Seal Coat	332-1
333	2012	Fog Seal Coats	333-1
334	2016	Preservative Seal for Asphalt Concrete	334-1
335	2012	Placement and Construction of Hot Asphalt-Rubber Seal	335-1
336	2016	Pavement Matching and Surfacing Replacement	336-1
337	2018	Asphalt Pavement Crack Sealing and Crack Filling	337-1
340	2018	Concrete Curb, Gutter, Sidewalk, Curb Ramps, Driveway and Alley Entrance	340-1
342	2016	Interlocking Concrete Paver Installations	342-1
343	1998	Exposed Aggregate Paving	343-1
345	2016	Adjusting Frames, Covers and Valve Boxes	345-1
350	2013	Removal of Existing Improvements	350-1
355	2015	Utility Potholes-Keyhole Method	355-1
360	1998	Telecommunications Installation	360-1

PART 400 - RIGHT-OF-WAY AND TRAFFIC CONTROL

Section	Last Revised	Title	Page
401	1998	Traffic Control	401-1
405	2015	Survey Monuments	405-1
410	1998	Precast Safety Curbs	410-1
415	2018	Flexible Metal Guardrail	415-1
420	1998	Chain Link Fences	420-1
424	1998	Parkway Grading	424-1
425	1998	Topsoils	425-1
430	2014	Landscaping and Planting	430-1
440	1999	Sprinkler Irrigation System Installation	440-1

PART 500 - STRUCTURES

Section	Last Revised	Title	Page
505	2017	Concrete Structures	505-1
506	2012	Precast Prestressed Concrete Members	506-1
510	1998	Concrete Block Masonry	510-1
511	1998	Brick Masonry	511-1
515	1998	Steel Structures	515-1
520	2012	Steel and Aluminum Handrails	520-1
525	1998	Pneumatically Placed Mortar	525-1
530	2000	Painting	530-1

PART 600 – WATER, SEWER, STORM DRAIN AND IRRIGATION

Section	Last Revised	Title	Page
601	2016	Trench Excavation, Backfilling and Compaction	601-1
602	2016	Trenchless Installation of Steel Casing	602-1
604	2018	Placement of Controlled Low Strength Material	604-1
605	2014	Subdrainage	605-1
607	2015	Trenchless Installation of Smooth Wall Jacking Pipe	607-1
608	2017	Horizontal Directional Drilling	608-1
610	2015	Water Line Construction	610-1
611	2015	Water, Sewer and Storm Drain Testing	611-1
615	2015	Sanitary Sewer Line Construction	615-1
616	2017	Reclaimed Water Line Construction	616-1
618	2015	Storm Drain Construction	618-1
620	2012	Cast-in-place Concrete Pipe	620-1
621	1998	Corrugated Metal Pipe and Arches	621-1
625	2016	Manhole Construction and Drop Sewer Connections	625-1
630	2018	Tapping Sleeves, Valves and Valve Boxes on Water Lines	630-1
631	2012	Water Taps and Meter Service Connections	631-1

PART 700 - MATERIALS

Section	Last Revised	Title	Page
701	2013	Aggregate	701-1
702	2013	Base Materials	702-1
703	2012	Riprap	703-1
705	2012	Portland Cement Treated Base	705-1
708	2011	Asphalt Pavement Core Bonding Materials	708-1
710	2017	Asphalt Concrete	710-1
711	2017	Paving Asphalt	711-1
712	1999	Liquid Asphalt	712-1
713	2012	Emulsified Asphalts Materials	713-1
714	2012	Microsurfacing Materials	714-1

PART 700 - MATERIALS

Section	Last Revised	Title	Page
715	2012	Slurry Seal Materials	715-1
716	2012	Cover Material	716-1
717	2017	Asphalt-Rubber Asphalt Concrete	717-1
718	2016	Preservative Seal for Asphalt Concrete	718-1
719	2017	Polymer Modified Asphalt Concrete	719-1
723	2018	Pervious Concrete	723-1
725	2018	Portland Cement Concrete	725-1
726	2018	Concrete Curing Materials	726-1
727	2017	Steel Reinforcement	727-1
728	2018	Controlled Low Strength Material	728-1
729	2018	Expansion Joint Filler	729-1
735	2016	Reinforced Concrete Pipe	735-1
736	2012	Non-Reinforced Concrete Pipe	736-1
738	2012	High Density Polyethylene Pipe And Fittings for Storm Drain And Sanitary Sewer	738-1
739	2015	Steel Reinforced Polyethylene Pipe And Fittings for Storm Drain, Irrigation And Sanitary Sewer	739-1
740	2014	Polypropylene Pipe And Fittings for Storm Drain, Irrigation And Sanitary Sewer	740-1
741	2011	Lining for Reinforced Concrete Sanitary Sewer Pipe	741-1
742	2015	Precast Manhole	742-1
743	1998	Vitrified Clay Pipe	743-1
745	1998	PVC Sewer Pipe and Fittings	745-1
750	2015	Iron Water Pipe and Fittings	750-1
752	1998	Asbestos-Cement Water Pipe and Fittings	752-1
753	2000	Galvanized Pipe and Fittings	753-1
754	2012	Copper Pipe, Tubing and Fittings	754-1
755	2012	Polyethylene Pipe for Water Distribution	755-1
756	2008	Dry Barrel Fire Hydrants	756-1
757	1998	Sprinkler Irrigation System	757-1
758	2005	Concrete Pressure Pipe - Steel Cylinder Type	758-1
759	2002	Steel Pipe	759-1
760	1998	Coating Corrugated Metal Pipe and Arches	760-1
761	1998	Structural Plate Pipe, Arches, and Pipe Arches	761-1
770	2013	Structural and Rivet Steel, Rivets, Bolts, Pins, and Anchor Bolts	770-1
771	2016	Galvanizing	771-1
772	2017	Chain Link Fence	772-1
775	2015	Brick and Concrete Masonry Units (Blocks)	775-1
776	2012	Masonry Mortar and Grout	776-1
778	1998	Lumber	778-1
779	1998	Wood Preservatives	779-1
787	1999	Gray Iron Castings	787-1
790	1999	Paint	790-1
792	2010	Dust Palliative	792-1
795	2014	Landscape Material	795-1
796	2017	Geosynthetics	796-1
	2018	Index	Index-1

This Page Reserved for Future Use

PART 100

GENERAL CONDITIONS

Section	Last Revised	Title	Page
101	2015	Abbreviations and Definitions	101-1
102	2008	Bidding Requirements and Conditions	102-1
103	1999	Award and Execution of Contract	103-1
104	2012	Scope of Work	104-1
105	2018	Control of Work	105-1
106	2017	Control of Materials	106-1
107	2015	Legal Regulations and Responsibility to Public	107-1
108	2014	Commencement, Prosecution and Progress	108-1
109	2011	Measurements and Payments	109-1
110	2000	Notification of Changed Conditions and Dispute Resolution	110-1

This Page Reserved for Future Use

Emergencies may arise during the progress of the work which may require special effort or require extra shifts of men to continue the work beyond normal working hours. The Contractor shall be prepared in case of such emergencies from whatever cause, to do all necessary work promptly.

105.6 COOPERATION WITH UTILITIES:

The Contracting Agency will notify all utility companies, all pipe line owners, or other parties affected, and endeavor to have all necessary adjustments of the public or private utility fixtures, pipe lines, and other appurtenances within or adjacent to the limits of construction, made as soon as practicable.

The Contractor shall comply with the requirements of Arizona Revised Statutes 40-360.21 through 40-360.29 (one-call notification center, Arizona 811) in notification to the interested utility owners prior to start of construction. The Contractor shall resolve all problems with the utility owners concerned.

Where water user's association facilities obstruct construction of the work, the Contractor shall contact officials of the association relative to the shutdown of irrigation water and shall acquaint himself with and conform to the requirements of the association.

Water lines, gas lines, wire lines, service connections, water and gas meter boxes, water and gas valve boxes, light standards, cableways, signals and all other utility appurtenances within the limits of the proposed construction which are to be relocated or adjusted are to be moved by the owners at their expense except as otherwise provided for in the special provisions or as noted on the plans. In the event an existing service is found to be in a materially different location than shown on the plans and requires additional or more costly work on the part of the Contractor, the procedures in Section 104, will apply.

It is understood and agreed that the Contractor has considered in his proposal all of the permanent and temporary utility appurtenances in their present or relocated positions as shown on the plans and that no additional compensation will be allowed for any delays, inconvenience, or damage sustained by him due to any interference from the said utility appurtenance or the operation of moving them. If delays are encountered because utility owners have not relocated or adjusted their facilities, the contract time will be adjusted in accordance with Section 108.

It shall be the responsibility of the Contractor to ascertain the need for bracing or shoring of utility poles during the construction of the project and no additional compensation will be allowed for such bracing or shoring.

In general, the contract will indicate various utility items, certain of which are to be relocated or adjusted by the utility owner and others by the Contractor. Any work performed by the Contractor for any utility company, separate from the contract shall be paid for by the utility company and will not be a part of the agency contract.

105.6.1 Notifications Requirement in the Event of Any Damage to or Dislocation of Underground Facilities: In the event of any damage to or dislocation of any underground facility, the Contractor responsible for the excavation operation shall immediately notify the owner of such facility and shall not attempt to repair any facility, except those intended for the conveyance or storage of water and sewage. The excavation shall be left open until the arrival of representatives of the owner. The owner will dispatch its representative promptly to examine the underground facility and, if necessary, make repairs.

105.6.2 Work Within a Railroad Right of Way: When a railroad right of way is included in the work, the Contractor shall:

(A) Comply with the rules and regulations of the railroad company relative to the required manner of constructing said portion of the work; and shall perform the work so as not to endanger or interfere with the safe operation of the track(s) and property of the railroad company and of the traffic moving on such track(s).

(B) Carry the kinds and amounts of insurance and bonds required by the railroad company for the period of time in which work is performed on or adjacent to the railroad company's property, and until such work has been satisfactorily completed and all tools, equipment and materials have been removed from the railroad company's property and such property is left in a clean and presentable condition.

(C) Contact the railroad company at least 48 hours in advance of performing any construction within the right of way of any track(s).

105.7 COOPERATION BETWEEN CONTRACTORS:

The Contracting Agency reserves the right at any time to contract for and perform other or additional work on or near the work covered by the contract.

When separate contracts are let within the limits of any one project, each Contractor shall conduct his work so as not to interfere with or hinder the progress or completion of the work being performed by other Contractors. Contractors working on the same project shall cooperate with each other as directed.

Each Contractor involved shall assume all liability, financial or otherwise, in connection with his contract and shall protect and save harmless the Contracting Agency from any and all damages or claims that may arise because of inconvenience, delay, or loss experienced by him because of the presence and operations of other Contractors working within the limits of the same project.

The Contractor shall arrange his work and shall place and dispose of the materials being used so as not to interfere with the operations of the other Contractors within the limits of the same project. He shall join his work with that of others in an acceptable manner and shall perform it in proper sequence to that of the others.

The Contracting Agency will not honor any claim for extra compensation due to delays, extra work, or extension of time caused by any other Contractors working within the limits of the same project.

105.8 CONSTRUCTION STAKES, LINES AND GRADES:

The Engineer will set construction stakes establishing lines and grades for road work, curbs, gutters, sidewalks, structures and centerlines for utilities and necessary appurtenances as he may deem necessary, he will furnish the Contractor with all necessary information relating to the lines and grades. These stakes and marks shall constitute the field control by and in accordance with which the Contractor shall establish other necessary controls and perform the work.

The Contractor shall perform the work in accordance with the Engineer's stakes and marks, and shall be charged with full responsibility for conformity and agreement of the work with such stakes and marks.

The Contractor shall be held responsible for the preservation of all stakes and marks, and if the construction stakes or marks have been carelessly or willfully destroyed or disturbed by the Contractor, the cost for replacing them will be charged against him and will be deducted from the payment for the work.

The Contractor shall give notice to the Engineer not less than two working days in advance of when he will require survey services in connection with any portion of the work.

The Contractor shall set the construction stakes for buildings establishing lines, grades, and elevations to include necessary utilities and appurtenances and shall be responsible for their conformance with plans and specifications. The Engineer will establish or designate a control line or bench mark of known location and elevation for use as a reference.

105.9 DUTIES OF INSPECTOR:

The Engineer may provide the Inspector, assistants, and other field staff to assist the Engineer in observing performance of the work of the Contractor. Through onsite observations of the work in progress and field checks of materials and equipment, the Inspector shall endeavor to provide further protection for the Contracting Agency against defects and deficiencies in the work of the Contractor; but, the furnishing of such services will not make the Inspector responsible for or give the Inspector control over construction means, methods, techniques, sequences, or procedures or for safety precautions or programs, or responsibility for the Contractor's failure to perform the work in accordance with the contract documents.

PART 300

STREETS AND RELATED WORK

Section	Last Revised	Title	Page
301	2014	Subgrade Preparation	301-1
306	2010	Mechanically Stabilized Subgrade-Geogrid Reinforcement	306-1
309	2017	Lime Stabilization or Modification of Subgrade	309-1
310	2018	Placement and Construction of Aggregate Base Course	310-1
311	2014	Placement and Construction of Cement Treated Subgrade	311-1
312	2012	Cement Treated Base	312-1
315	1998	Bituminous Prime Coat	315-1
317	2013	Asphalt Milling	317-1
320	1999	Road-mixed Surfacing	320-1
321	2018	Placement and Construction of Asphalt Concrete Pavement	321-1
322	2017	Decorative Asphalt	322-1
323	2018	Placement of Pervious Concrete	323-1
324	2015	Portland Cement Concrete Pavement (PCCP)	324-1
325	2016	Placement and Construction of Asphalt-Rubber Asphalt Concrete	325-1
326	2017	Placement and Construction of Polymer Modified Asphalt Concrete	326-1
327	2012	Hot In-Place Recycling	327-1
329	1998	Tack Coat	329-1
330	1998	Asphalt Chip Seal	330-1
331	2018	Microsurfacing Specifications	331-1
332	2013	Placement and Construction of Asphalt Emulsion Slurry Seal Coat	332-1
333	2012	Fog Seal Coats	333-1
334	2016	Preservative Seal for Asphalt Concrete	334-1
335	2012	Placement and Construction of Hot Asphalt-Rubber Seal	335-1
336	2016	Pavement Matching and Surfacing Replacement	336-1
337	2018	Asphalt Pavement Crack Sealing and Crack Filling	337-1
340	2018	Concrete Curb, Gutter, Sidewalk, Curb Ramps, Driveway and Alley Entrance	340-1
342	2016	Interlocking Concrete Paver Installations	342-1
343	1998	Exposed Aggregate Paving	343-1
345	2016	Adjusting Frames, Covers and Valve Boxes	345-1
350	2013	Removal of Existing Improvements	350-1
355	2015	Utility Potholes-Keyhole Method	355-1
360	1998	Telecommunications Installation	360-1

This Page Reserved for Future Use

SECTION 310

PLACEMENT AND CONSTRUCTION OF AGGREGATE BASE COURSE

310.1 DESCRIPTION:

Aggregate base course shall comply with Section 702 unless the use of a different type of material is specifically authorized in the special provisions.

310.2 PLACEMENT AND CONSTRUCTION:

The compacted lift thickness shall not exceed 6 inches, unless approved by the Engineer. Based on the type of material, type of equipment and compaction methods used, the Contractor may propose a greater lift thickness to the Engineer for approval.

After distributing, the aggregate base course material shall first be uniformly watered and then graded to a uniform layer that will net, after compacting, the required thickness. The grading operation shall be continued to such extent as may be necessary to minimize segregation. The quantity of water applied shall be that amount which will assure proper compaction resulting in the density required by Section 310.3.

After placement, the aggregate base course surface shall be true, even and uniform conforming to the grade and cross-section specified. In no case shall the aggregate base course vary by more than ½ inch above or below required grade.

310.3 COMPACTION

The contractor is responsible for providing appropriate equipment and techniques to achieve the compaction results required by this specification. The aggregate base course shall be compacted in lift thicknesses as allowed by Section 310.2.

The laboratory maximum dry density and optimum moisture content for the aggregate base course material shall be determined in accordance with AASHTO T-99 method "C" OR "D," with Rock Correction Procedure. Field 'one-point' maximum dry density and optimum moisture procedures will not be allowed for acceptance.

The in-place density shall be determined in the field by nuclear density testing in accordance with AASHTO T-310 or sand cone density testing in accordance with AASHTO T-191. In the event nuclear density testing is selected, and density results are in question, a sand cone correlation will be performed by the accepting agency at the contractor's request, not to exceed one sand cone for each ten nuclear density tests.

A rock correction, to compensate for rock content larger than the ¾ inch sieves (as required by the laboratory maximum dry density and optimum moisture procedure selected), shall be performed in accordance with AASHTO T-99 Annex A1. Specific gravity of the oversize particles shall be lab measured for use in the rock correction. The specific gravity shall be determined in accordance with AASHTO T-85.

For roadway construction, a minimum of one field density test shall be performed per lift per 660 feet per lane. For other aggregate base course applications, a minimum of one field density test shall be performed for each 800 square yards.

Unless otherwise noted in the project plans or project specifications, the moisture content of the aggregate base course at the time of compaction shall be the optimum moisture content +/- 3%.

The following percent compaction is required:

(A) Below asphalt concrete pavement	100%
(B) Below Portland cement concrete pavement, driveways, curb & gutter, sidewalks, and roadway shoulders	95%
(C) All other areas not subject to vehicular traffic	85%

Revised 2018

Areas which fail initial testing for density and/or moisture content shall be reworked until passing tests for density and/or moisture content are achieved. Lower moisture content percentages at the time of field density testing may be allowed if significant time has passed since the time of compaction and the required density has been achieved.

310.4 THICKNESS AND/OR PLASTICITY INDEX DEFICIENCY:

When in the opinion of the Engineer there is reason to believe that a deficiency in thickness, or an excess of plasticity exists, measurements or samples will be taken in the same pattern as that defined in Section 321. If the base has been covered or it is otherwise impractical to correct the deficiency, the corrective measures in Table 310-1 shall be taken by the Contractor at no additional cost to the Contracting Agency.

TABLE 310-1		
THICKNESS AND PLASTICITY DEFICIENCY		
Type	**Deficiency**	**Corrective Measure**
I	Less than 1/2 inch of the required thickness	No corrective measure required.
II	1/2 inch or more but less than 1inch of the required thickness	(1) The contractor may choose to add additional material and rework the grade to meet the specification requirements. (2) The contractor may choose to increase the thickness of asphalt concrete by the amount of the aggregate base course thickness deficiency at no additional cost to the Owner. Required grade shall be met.
III	Thickness deficiency by greater than 1 inch	(1) The contractor will remove the aggregate base course and regrade the subgrade to allow the required aggregate base course layer thickness to be constructed. (2) If grades allow, the contractor may propose that the thickness of asphalt concrete be increased by the amount of the aggregate base course deficiency at no additional cost to the Owner.
IV	A plasticity index of 6 to 7 inclusive	(1) An Engineering Analysis (EA) that includes R-value testing may be prepared by the contractor to evaluate the expected performance of the aggregate base course layer. The EA may provide mitigation options for the Engineer to consider. If the Engineer accepts the plasticity index as a result of the EA, the material will be accepted at full payment. If the Engineer rejects the EA, the contractor will perform either option 2 or 3 below. (2) The contractor may choose to reprocess or treat the existing material to bring it within specification limits or remove deficient material from affected area and replace with material complying with the specifications. (3) If grades allow, the contractor may increase the thickness of asphalt concrete by ½-inch at no additional cost to the Owner.
V	A plasticity index of over 7	(1) The contractor may choose to reprocess or treat the existing material to bring it within specification limits or remove deficient material from affected area and replace with material complying with the specifications.

The asphalt concrete produced shall conform to the requirements of the production tolerances established in Section 321.10. When the asphalt concrete does not conform to the production tolerances, it shall be reported to the Engineer, and corrective quality control measures shall be implemented, or production shall cease immediately at no additional cost to the contracting Agency.

Requests for referee testing as described in Section 321.11 will only be considered based on quality control test results performed by a laboratory accredited by the AASHTO Accreditation Program (AAP) for the tests being performed or a laboratory listed in the current ADOT Directory of Approved Materials Testing Laboratories for the set of tests in question. The laboratory shall use properly certified technicians in accordance with ASTM D3666, Section 7 (Personnel Qualifications).

321.10 ACCEPTANCE:

321.10.1 Acceptance Criteria: Asphalt concrete will be divided into lots for the purpose of acceptance. A lot shall be one day's production. Each lot shall be divided into sublots of 500 ton or fraction thereof. Tests used to determine acceptance will be performed by a laboratory accredited by the AASHTO Accreditation Program (AAP) for the tests being performed. The contracting agency shall provide an appropriately accredited laboratory or laboratories to perform the acceptance testing. laboratories shall use properly certified technicians in accordance with ASTM D3666, Section 7 (Personnel Qualifications). The acceptance laboratory will take representative samples of the asphalt concrete from each sublot to allow for testing of gradation, binder content, air voids, pavement thickness, and compaction of base and surface courses. Acceptance of each sublot will be based on the test data from the sample(s) from that sublot. All acceptance samples shall be taken using random locations or times designated by the Engineer in accordance with ASTM D3665.

For permit work, testing that does not strictly adhere to the sampling and testing methodology and requirements outlined in this section shall be disregarded and not considered in any acceptance determination. All required retesting shall be at the expense of the permittee.

321.10.2 Gradation, Binder Content and Air Voids: The acceptance laboratory will take a sample of the asphalt concrete in accordance with the requirements of Section 2 or 4 of Arizona Test Methods 104 or AASHTO T-168 from each sublot. The minimum weight of the sample shall be 45 pounds. Asphalt binder content and gradation shall be determined in accordance with AASHTO T-308 using the ignition furnace for each sublot. The acceptance laboratory is responsible for obtaining the necessary materials and performing an ignition furnace calibration as outlined in AASHTO T-308 for each asphalt concrete mixture utilized on the project. The correction factor used for each test shall be clearly indicated on the report. The bulk density for Marshall Mix designs shall be tested in accordance with AASHTO T-245. The bulk density for Gyratory mix designs shall be determined in accordance with AASHTO T-312. The maximum theoretical density shall be determined in accordance with the requirements of AASHTO T-209 including fan drying per AASHTO T-209 Section 15. Effective voids of the laboratory compacted specimens will be determined at a minimum of once per lot in accordance with the requirements of AASHTO T-269. Should the testing for effective air voids not meet the "Full Payment" or "No Corrective Action" requirements of Table 321-5, additional testing for laboratory air voids on the remaining sublots will be performed as necessary to determine the extent of the deficiency. Acceptance testing results will be furnished to the contractor and the supplier within five working days of receipt of samples by the acceptance laboratory.

During production, the allowable deviations from the mix design gradation targets are listed in the tables below. The allowable production tolerances may fall outside of the mix design gradation bands.

TABLE 321-3A
GRADATION ACCEPTANCE LIMITS FOR MARSHALL MIXES

Sieve Size	3/8 inch Mix	1/2 inch Mix	3/4 inch Mix	Base Mix
1 inch	---	---	---	±7%
3/4 inch	---	---	±7%	±6%
1/2 inch	---	±7%	---	---
3/8 inch	±7%	±6%	±6%	±6%
No. 8	±6%	±6%	±6%	±6%
No. 40	±4%	±4%	±4%	±4%
No. 200	±2%	±2%	±2%	±2%

TABLE 321-3B			
GRADATION ACCEPTANCE LIMITS FOR GYRATORY MIXES			
Sieve Size	3/8 inch Mix	1/2 inch Mix	3/4 inch Mix
3/4 inch	---	---	±7%
1/2 inch	---	±7%	±6%
3/8 inch	±7%	±6%	---
No. 8	±6%	±6%	±6%
No. 40	±4%	±4%	±4%
No. 200	±2%	±2%	±2%

If the results from a single acceptance sample fall outside of the acceptance limits in Table 321-3A or 321-3B as applicable, a second sample shall be taken and if the second acceptance sample is also outside of the acceptance limits the Contractor shall cease production of asphalt concrete. Production shall not begin again until calibration test results verify that adjustments made to materials or proportions yield a gradation that falls within acceptance limits in Table 321-3A or 321-3B as applicable.

If the asphalt binder content is within ± 0.40% of the mix design target value, the asphalt concrete will be paid for at the contract unit price. If the asphalt binder content deviates by more than ± 0.40% from the mix design target value, the deficient area will be evaluated within the sublot by coring one additional location at a maximum interval of 100 feet on each side of the deficient sample. The asphalt content of the original deficient sample will be averaged with the asphalt binder content of the two additional cores to determine compliance with the acceptance requirements. If the resulting average of the asphalt binder content deviates by more than ± 0.40% from the mix design target value, then Table 321-4 shall apply to the sublot. If approved by the Engineer, the Contractor may obtain additional cores to assist in formulation of an Engineering Analysis, but the additional cores shall not be used for re-evaluating acceptance.

TABLE 321-4		
ASPHALT BINDER CONTENT ACCEPTANCE AND PENALTIES		
Deviation from that permitted	When the contracting agency is the owner: Payment Reduction ($ per ton of asphalt concrete)	When the contracting agency is not the owner (i.e. permits): Corrective Action
Over 0.2% above that permitted	Removal* or EA	Removal* or EA
Over 0.1% to 0.2% above that permitted	$6.00	EA
Over 0.0% to0.1% above that permitted	$2.00	EA
Within permitted range	Full Payment	No Corrective Action
Over 0.0% to0.1% below that permitted	$2.00	EA
Over 0.1% to 0.2% below that permitted	$6.00	EA
Over 0.2% below that permitted	Removal* or EA	Removal* or EA

NOTES: *The Contractor shall remove and replace the entire sublot that is deficient.
EA = Engineering Analysis per Section 321.10.6

If the laboratory air voids fall within a range of 2.8% to 6.2%, the asphalt concrete will be paid for at the contract unit price. If the laboratory air voids are outside of this range, the deficient area will be evaluated within the sublot by coring one additional location at a maximum interval of 100 feet on each side of the deficient sample. The laboratory air voids of the original deficient sample will be averaged with the laboratory air voids obtained from each of the two additional cores to determine compliance with the acceptance requirements. If the resulting average of the laboratory air voids is outside the indicated range, then Table 321-5 shall apply to the sublot. If approved by the Engineer, the Contractor may obtain additional cores to assist in formulation of an Engineering Analysis, but the additional cores shall not be used for re-evaluating acceptance.

321.11 REFEREE:

If the Contractor has reason to question the validity of any of the acceptance test results, the Contractor may request that the Engineer consider referee test for final acceptance. Any request for referee testing must describe the contractor's reasons for questioning the validity of the original acceptance test results and must clearly describe which set of acceptance tests are in question. The engineer may either accept or reject the request for referee testing. When referee testing is accepted the Contractor (at the Contractors own expense) will engage an independent laboratory accredited by the AAP or a laboratory listed in the current ADOT Directory of Approved Materials Testing Laboratories as appropriate the acceptance tests that are being questioned. The independent referee laboratory shall use properly certified technicians in accordance with ASTM D3666, Section 7 (Personnel Qualifications). For the set of test results in question the referee laboratory shall perform a new set of acceptance tests (as required by Section 321.10 representing the area for the set of tests in question). The referee tests will replace the original acceptance tests that were in question.

For permit work, the permittee, whose results necessitate referee testing, shall bear all expenses in the additional testing (i.e., secondary and the referee testing) if the original results are not substantiated by the referee testing procedure outlined in this section. Additionally, any testing performed that does not strictly adhere to the sampling and testing methodology and requirements in Section 321.10 shall be disregarded and not allowed in any acceptance determination. Disregarded tests will be re-performed at the expense of the permittee.

These tests may include asphalt binder content, aggregate gradation, Marshall or Gyratory unit weight, maximum theoretical unit weight, laboratory air voids and in-place air voids (compaction). Samples for referee testing shall come from representative samples obtained from the completed pavement, as directed by the Engineer.

The number of samples taken will be the same as specified in Section 321.10. The independent laboratory shall compile the test results and transmit them to both the Engineer and the contractor. The independent laboratory shall include a report sealed and signed by an Engineer registered in the State of Arizona, who is experienced in asphalt concrete testing and mix design development. The signed report shall give an opinion that the material evaluated does or does not comply with project specifications, shall clearly describe any deficiencies, and the results will be binding between all parties.

321.12 MEASUREMENT:

Asphalt concrete pavement will be measured by the ton, or by the square yard, for the mixture actually used as allowed above, which shall include the required quantities of mineral aggregates, asphalt binder, and mineral admixture. Measurement shall include any tonnage used to construct intersections, roadways, streets, or other miscellaneous surfaces indicated on the plans or as directed by the Engineer.

Measurement for safety edge preparation only applies to overlays of existing pavements that require the construction of a safety edge when none exists. Safety edge preparation will be measured by the linear foot. Safety edge preparation will not be measured when a safety edge is part of new pavement construction, pavement widening, or when overlaying an existing pavement that contains a safety edge. The asphalt concrete pavement measurement shall include the tonnage used to construct safety edges or the square yard measurement for asphalt concrete pavement will be increased by the horizontal extension of the safety edge beyond the roadway pavement edge.

321.13 PAYMENT:

The asphalt concrete measured as provided above will be paid for at the contract price per ton or square yard, as adjusted per Section 321.10, which price shall be full compensation for the item complete, as herein described and specified.

Payment for tack coat will be by the ton diluted, based on the rate of application, as directed by the Engineer.

No payment will be made for any overrun in quantity of asphalt concrete in excess of 10 percent for newly constructed pavement having a total thickness equal to or greater than 2.5 inches. The overrun quantity is excess tonnage above the tonnage calculated based on actual field measurement of area covered, design thickness, and the mix design unit weight. The calculations for overrun will be by individual pay item. To compensate or adjust for a thickness deficiency in an underlying asphalt concrete course, the Engineer may authorize a quantity increase in excess of 10 percent for a subsequent asphalt concrete course. In such cases, the quantity in excess of 10 percent will be paid for at the lowest unit price.

Removal of raised pavement markers, pavement repars, and surface pavement replacments required prior to roadway overlay operations will be paid for by other pay items unless otherwise specified.

Except as otherwise specified, no separate payment will be made for work necessary to construct thickened edges, safety edges, or other miscellaneous items or surfaces of asphalt concrete.

Payment for safety edge preparation will be at the contract unit price for the quantities measured as described above.

321.14 ASPHALT CORE METHOD: Core Drilling of Hot Mix Asphalt (HMA) for Specimens of 4" or 6" diameter

321.14.1 Scope: This method is to establish a consistent method of the use of a diamond bit core to recover specimens of 4 or 6 inch diameter for laboratory analysis and testing. The method will require the use of: water, ice (bagged or other suitable type), dry ice, and a water-soap solution to be utilized when coring asphalt rubber concrete. Individuals doing the specimen recovery should be observing all safety regulations from the equipment manufacturer as well as the required job site safety requirements for actions, and required personal protective equipment.

For permit work, testing of cores obtained in a manner that does not strictly adhere to the methodology outlined in this section shall be disregarded and not considered in any acceptance determination. Retesting shall be at the expense of the permittee.

321.14.2 Core Drilling Device: The core drilling device will be powered by an electrical motor, or by an acceptable gasoline engine. Either device used shall be capable of applying enough effective rotational velocity to secure a drilled specimen. The specimen shall be cored perpendicularly to the surface of pavement, and that the sides of the core are cut in a manner to minimize sample distortion or damage. The machinery utilized for the procedure shall be on a mounted base, have a geared column and carriage that will permit the application of variable pressure to the core head and carriage throughout the entire drilling operation. The carriage and column apparatus shall be securely attached to the base of the apparatus; and the base will be secured with a mechanical fastener or held in place by the body weight of the operator. The core drilling apparatus shall be equipped with a water spindle to allow water to be introduced inside of the drill stem while operating. The cutting edge of the core drill bit shall be of hardened steel or other suitable material with embedded diamond chips in the cutting surface. The core barrel shall be of sufficient diameter to secure a specimen that is a minimum of four or six inches or whichever is prescribed for necessary testing. The core barrel shall not be missing more than one of the teeth used for cutting; if so it shall be discarded and another barrel shall be used. The core barrel shall also be a minimum of two inches longer than the anticipated depth of pavement in accordance with project paving plans.

321.14.3 Accessory Equipment: A sufficient supply of ice and dry ice shall be provided to sufficiently cool the pavement prior to securing the samples from the designated areas in the pavement. The ice should also be used to adjust the temperature of the water used to cool the core bit. A water supply (usually a plastic 35 – 55 gal drum) with sufficient hose to introduce the water into and through the spindle of the coring device by gravity feed. The drum should be white or light in color to minimize excessive thermal heating of the water (*for coring of asphalt rubber cores see Note 1*). At no time shall the water utilized in the coring operation exceed 65 degrees F during the coring operation. Ice shall be utilized to ensure the temperature control of the water being introduced during the cutting operation. An ice chest or other suitably insulated container that can maintain a temperature of less than 70 degrees F shall be used to secure the specimens during transport. The container will be equipped with flat shelving that will support the drilled cores throughout the entire specimen dimension during transport back to the testing facility.

Miscellaneous hand tools to remove the drilled specimen from the drill hole or the core barrel taking great care in not disturbing the specimen more than necessary (refer to fig. 1 in ASTM D5361).

321.14.4 Process: The pavement surface at the time of coring shall not exceed a temperature of 90 degrees F; the pavement shall be conditioned with ice or dry ice to ensure that this requirement is met. Immediately after it has been ensured that the pavement has dropped to the required temperature, core drilling shall begin. The operator will then apply an even and continuous pressure (Note 2) to penetrate through the full depth of the pavement. The operator will concurrently ensure that enough water is moving over the core surface as to adequately remove any and all cuttings that could damage the drilled core. After the pavement thickness has been penetrated the core shall be carefully removed from either the drill hole or the core barrel and be immediately transferred to an ice chest or other suitable container. Each individual core shall be placed on a shelf in the cooler with the exposed side of the specimen facing down, or the "top side" down. If the specimen is a two lift core, the only acceptable means of separating lifts is with a power or other acceptable wet saw type of equipment (conforming to ASTM D5361); however, at no time shall cores be split using a mallet and screwdriver or metal straight edge when being tested for bulk density. Perpendicularity of the specimen shall be checked in the field after the specimen has been extracted from the

surface. The core operator shall hold the core up to eye level and place the core top side down in a "speed square" or small carpenters square. The specimen placed in the square shall not depart from perpendicular to the axis more than 0.5^{o} (approximately equivalent to 1/16 of an inch in 6 inches). If the specimen is outside of this distance from square it shall be discarded in the field and another sample cored that falls within tolerance. The cores upon arriving at the laboratory for testing shall be carefully cleaned and measured for thickness in accordance with ASTM D3549. A speed square shall be utilized to measure perpendicularity as compared to a 90 degrees angle and shall not depart from perpendicular to the axis more than 0.5 degrees (approximately equivalent to 1/16 of an inch in 6 inches). All remaining testing shall be done within the parameters of the current project and/or agency required specification.

---

*Note 1 – It should be noted that when the material to be cored is a rubberized asphalt mixture a wetting agent such as liquid dish soap shall be added to the water barrel to hinder the material from sticking or allowing the binder to spread during coring.

*Note 2 – This refers to pressure exerted on the core barrel and machine during the coring process. Too much pressure can cause damage to the core barrel and the motor; and too little pressure can cause a glazing of the diamonds, reducing cutting efficiency and premature wear of the barrel.

-End of Section-

SECTION 322

DECORATIVE ASPHALT

322.1 GENERAL REQUIREMENTS:

Decorative asphalt is asphalt stamping that creates an imprinted surface pattern and/or installs color coatings to the surface of a newly constructed asphalt pavement. Mock ups may be required at the owner's discretion to ensure Contractor familiarity with product and installation procedures. Acceptance of colors and application procedures should be accepted in writing from the agency/owner prior to commencement of work. Payment for mock ups, if required in the contract documents, will be considered incidental to the stamping or coating item.

The Contractor shall submit for review and approval all manufacturer product and technical data for materials proposed to be installed. The Contractor shall submit for review and approval a sample of the stamped asphalt material prior to installation. These submittals shall be submitted to the Engineer.

322.2 MATERIALS:

All products used in the surfacing system shall meet the minimum physical and performance properties in Table 322-1. The Contractor shall, upon request, submit a Certificate of Compliance to the Engineer indicating that the materials to be included in the work meet these specification requirements. The color used for painted asphalt shall be as per the contract documents or as approved by the Agency.

TABLE 322-1
ASPHALT SURFACING SYSTEM PHYSICAL PROPERTIES

CHARACTERISTIC	TEST SPECIFICATION	TEST RESULT – BASE
Solids by Volume (%)	ASTM D2697	68% Min
Solids by Weight (%)	ASTM D2369	78% Min
Density	ASTM D1475	13.7 lbs./gal Min
Dry-Time (To Recoat)	ASTM D5895	20 Min
Taber Wear Abrasion Dry H-10 Wheel	ASTM D4060 1 day cure	0.16 g/1000 cycles Max
Taber Wear Abrasion Wet H-10 Wheel	ASTM D4060 7 days cure	2.34 g/1000 cycles Max
QUV E Accel.	ASTM G154 Delta	0.53 Min
Hydrophobicity Water Absorption	ASTM D570	7.6% (9 Day Immersion) Max
Shore Hardness	ASTM D2240	67 Type D Min
Mandrel Blend	ASTM D522-93A	1/4" @ 21 Degree C Pass Min
Permeance	ASTM D1653	3.77 g/m2 /hr. (52 mils) Max
VOC	Per MSDS	25 g/l Max
Adhesion to Asphalt	ASTM D4541	Substrate Failure
Friction Wet	ASTM E303 British Pendulum Tester	WP * Coated - 62 Min WP * Uncoated - 59 Min AC ** Coated - 70 Min AC ** Uncoated - 61 Min
Cure Time	Measured @ 77 Degrees Fahrenheit	Dry to touch – 20 Min Light Foot/Vehicle Traffic – 2-4 Hrs. Full Cure – 5 to 7 days

WP*= Wheel Path (Test conducted on asphalt pavement in wheel path.)
AC**= Adjacent to curb (Test conducted on asphalt pavement adjacent to curb.)

322.3 INSTALLATION & SURFACE PATTERNING:

The patterning equipment shall be metal templates that shall correspond to the patterns shown in the project plans and specifications.

The Contractor shall obtain the Engineer's approval prior to beginning asphalt stamping.

When new asphalt is to be stamped, it shall have one overnight period to set prior to stamping for conventional mixes and ARAC mixes shall have 30 days to set prior to the stamping/coating process. Asphalt shall be fully compacted prior to positioning the patterning template and meet all the requirements set forth in Sections 321 or 325 as applicable.

For raised medians and other areas not subject to vehicular traffic, the surface course shall be at least 2-1/2" of 1/2" or 3/8" Marshall Low Traffic asphalt concrete mix in accordance with Section 710, or as approved by the engineer.

The asphalt to be stamped shall be uniformly heated using infrared technology to a temperature that shall not exceed 280 degrees Fahrenheit. Templates shall be set in place using a plate compactor and fully embedded into the asphalt.

The template imprint depth shall be 3/8" over 95% of the patterned area. Template print depth shall be inspected prior to coating to ensure compliance. All hand tooling shall be complete, full depth, aligned vertically, and shall extend to the edge of the asphalt pavement, common edge, concrete curb, gutter, or other border. There shall be no over print or shadowing of patterns and no remnants of excess print on surrounding unintended areas. Should overprinting or other imperfections occur, these areas shall be repaired by using the same process outlined in this section to return the asphalt to a smooth condition to that of the unstamped area(s).

322.3.1 Surfacing System (Painted Asphalt & Clear Coat Sealant): The air temperature shall be at least 45 degrees F and rising before the application of surface system products begins. There shall also be no precipitation expected within 24 hours of the anticipated surfacing completion. The surface shall be free from laitance, grease, deleterious oils, or any other foreign matter prior to placing any pavement coating.

The surfacing system products shall be spray-applied. Where required to cover small areas, the surfacing system may be applied using brooms or brushes. When complete, the entire asphalt surface shall be uniformly covered with the surfacing product with no exposed asphalt present.

The Contractor shall use sufficient masking to ensure that the surface system products are applied only where specified. Masking shall be complete and no overspray, or other imperfections, onto surfaces not designated as coated surfaces shall be allowed.

The Contractor shall apply the surface system products per the manufacturer's recommendations. After the colorant has had sufficient time to set, a clear coat sealant, if required, shall be applied per the manufacturer's recommendations.

Total thickness of the surfacing product shall be per the manufacturer's recommendations or greater including the sealant.

After the surfacing system products have been applied, the treated asphalt shall not be exposed to vehicular traffic for eight (8) hours, or per the manufacturer's recommendations.

322.4 MEASUREMENT:

Approved and accepted decorative asphalt installations shall be measured by the square foot for asphalt surface patterning with color coating or for asphalt surface color coating without surface patterning. The measurement for asphalt stamping specialty design shall be the number of approved and accepted installations of each specialty design. Asphalt coloring shall be measured by the square foot.

322.5 PAYMENT:

Payment for specialty designs, for asphalt surface patterning with color coating, and for asphalt surface color coating without surface patterning shall be at the contract unit price and shall be full compensation for furnishing all labor, material, tools, equipment and incidentals, and doing all work involved in the installation of asphalt stamping complete in place, in compliance with the contract documents.

322.6 WARRANTY:

Asphalt color coating shall have a two year warranty from flaking, premature wearing and like defects. Color changes shall not be part of the warranty.

Warranty repair shall be at the expense of the Contractor. Areas that require recoating shall receive a light scuffing to remove the clear coat sealant prior to reapplication of the color coating and sealant.

- End of Section -

SECTION 323

PLACEMENT OF PERVIOUS CONCRETE

323.1 DESCRIPTION:

Pervious concrete describes a near-zero-slump, open graded material with sufficient continuous voids to allow water to pass from the surface to underlying layers. It does not look or behave like typical asphalt or concrete. The finished surface is not tight and uniform, but is open and varied to allow permeability. Minor surface irregularities and minimal amounts of surface raveling, and color variations are normal. Pervious concrete is usually part of a water management system used to reduce runoff rates and volumes from on-grade surfaces such as patios, walkways, driveways, fire lanes, and parking spaces. Sections without sub-surface storage bed systems can achieve reductions in runoff rates and volumes by providing less surface runoff than conventional hardscape surfaces. Sections with sub-surface storage bed systems designed to meet specific groundwater recharge requirements will require additional engineering and supplemental specifications. The work covered by this specification is intended for light traffic areas and consists of furnishing all materials, labor and equipment for the placement of pervious concrete.

323.2 MATERIALS:

Materials utilized in pervious concrete shall conform to the requirements of Section 723.

323.3 GENERAL:

The Pervious Concrete Contractor shall be experienced in the installation of pervious concrete and shall employ no less than one National Ready Mixed Concrete Association (NRMCA) certified Pervious Concrete Craftsman who must be on site overseeing each placement crew during all pervious concrete placements or employ no less than three NRMCA Certified Pervious Concrete Installers on each pervious concrete placement crew during all pervious concrete placements. The minimum number of certified individuals (1 Craftsman or 3 Installers) is to be present at each pervious concrete placement, and a certified individual is to be in charge of the placement crew and the construction procedures.

Field test(s) of pervious concrete shall be performed by an individual certified as both an NRMCA Certified Pervious Concrete Technician or equivalent, and ACI Concrete Field Technician Grade 1 or equivalent as approved by the Engineer.

323.4 CONSTRUCTION OF TEST SECTION(S):

If required by the Engineer or contract documents, the Contractor shall construct a test section(s) using the same equipment, and placement crew as proposed to be used for the remainder of the pervious concrete work and may be placed non-contiguously. Test section(s) shall be a minimum of 225 square feet and shall include a construction joint and a control joint. Test section(s) may be placed at any of the final pervious concrete placement locations and may be incorporated into the work if approved by the Engineer.

323.4.1 Sample fresh pervious concrete in accordance with ASTM C172. The size of the sample shall be at least 1 ft^3. The temperature of the pervious concrete shall be tested in accordance with ASTM C1064 and shall be 95 degrees or less, unless a higher temperature is approved by the Engineer. Complete at least one density test on a sample of freshly mixed pervious concrete in accordance with ASTM C1688. The acceptable fresh density shall be within ± 5 lbs/ft^3 of the approved mix design density.

323.4.2 Remove cores not less than 7 days after placement in accordance with ASTM C42 Obtaining and Testing Drilled Cores and Sawed Beams of Concrete. Test thickness in accordance with ASTM C174 and test saturated density in accordance with ASTM Cl40, paragraphs 8.3 and 9.3.

Tolerance for thickness, and density, reported as the average of three cores of each test panel, shall be as follows:

A. The average compacted thickness shall not be greater than 1/2 in. less than the specified thickness, with no single core exceeding 1 in. less than the specified thickness; nor shall the average compacted thickness be 1-1/2 in. more than the specified thickness.

B. The acceptable hardened density shall be within ± 5 lbs/ft^3 of the approved mix design density.

When a test panel is outside any of the limits of A and B above, the test panel shall be rejected, removed, and replaced at the Contractor's expense, unless accepted by the Engineer. When the test panel complies with A and B, the panel may be left in place and included in the completed work.

323.5 PERVIOUS CONCRETE BASE PREPARATION:

The surface below pervious concrete shall be prepared in accordance with the contract documents or as directed by the Engineer. Remove any non-compliant or loose material from the prepared base surface before placing pervious concrete. Keep all traffic off of the base during construction to the maximum extent practical. Regrade base material disturbed by concrete delivery vehicles or other construction traffic to the satisfaction of the Engineer, as needed.

323.6 PLACEMENT:

Pervious concrete shall be constructed a minimum of 6 inches in depth, unless otherwise specified in the plans or special provisions.

When hot weather is anticipated, recommended practices in ACI 305, Specification for Hot Weather Concreting, can provide good reference information to help the Contractor prepare and submit detailed procedures for the production, transportation, placement, protection, and curing of pervious concrete for approval by the Engineer. Evaporation retarders shall be available during placement and applied as needed in accordance with the manufacturer's recommendations to protect the pervious concrete from rapid evaporation. In cold weather follow the requirements of Section 725.9(A)(2).

Pervious concrete shall be uniformly deposited over the entire formed area. A self-propelled roller screed shall be used for strike-off, spreading, and compaction. Hand-rodding or other placement methods may be used if approved by the Engineer. Adjacent to the edge of each form, hand tampers shall be used for compaction. Placement operations shall not result in the voids becoming sealed in order to maintain an adequate continuous voids structure for water passage through the pervious concrete. Surface depressions shall be corrected immediately after compaction by placing fresh pervious concrete in the depressions and compacting using a hand tamper or roller compactor. The final surface shall not deviate more than 3/8 inch from a 10 foot straightedge laid on the surface.

323.6.1 JOINTS:

Joints shall be constructed in accordance with an approved jointing plan. Contraction joints shall be constructed at regular intervals not to exceed two times the placement width or 15 feet on center, whichever is less. Joints shall be constructed to a depth of 1/4 of the thickness, or a minimum of 1-1/2 inches whichever is greater. Unless otherwise approved, contraction joints shall be constructed by one of the following methods:

A. Rolling with a small roller to which a beveled fin has been attached around the circumference immediately after compaction and prior to curing.

B. Saw cutting as soon as the pervious concrete can be saw cut without causing raveling along the joint edges. Only the area occupied by the concrete saw shall be uncovered and exposed with all other curing materials remaining in place. Immediately after sawing each joint, the exposed area shall be fogged with water and re-covered in accordance with Section 323.7.

Use isolation joints only where pavement abuts fixed objects, such as buildings, foundations, and manholes. Extend isolation joints through the full depth of the pavement. Fill the entire isolation joint with expansion joint material that complies with Section 729.

323.7 CURING:

The Contractor shall submit a curing plan to the Engineer for review and approval. Curing shall begin immediately or in any case within 20 minutes of finishing. The surface and edges shall be securely covered with polyethylene sheeting/film having a minimum thickness of 6 mils and meeting the requirements of Section 726.2(A). The cover shall be checked daily to verify that it has not been displaced or damaged, and that condensation is evident underneath the sheeting. Damaged sheeting shall

be repaired immediately. Displaced sheeting shall be replaced immediately. When there is no observable condensation, 1.5 gallons of water per square yard shall be applied to the surface. Curing methods shall remain in place for a minimum of 7 days or as directed by the Engineer. Pavement sections shall not be opened to light vehicular traffic until the concrete has cured for at least 14 days (28 days for heavy traffic), and until approved by the Engineer for opening to traffic.

323.8 QUALITY CONTROL FIELD TESTING:

Complete at least one density test on a sample of freshly mixed pervious concrete for each 5000 square feet or each day of concrete placement, whichever is less, in accordance with ASTM C1688. Sample fresh pervious concrete in accordance with ASTM C172. The size of the sample shall be at least 1 ft^3. The temperature of the pervious concrete shall be tested in accordance with ASTM C1064 and shall be 95 degrees or less, unless a higher temperature is approved by the Engineer. Discharge of the previous concrete shall be completed in accordance with Section 725.9 (A)(4).

Remove three cores from each lot of 5,000 square feet or each day's production, whichever is less, in accordance with ASTM C42 not less than 7 days after placement of the pervious concrete. Cores shall be a minimum nominal 4 in. diameter. Select three locations in accordance with ASTM D3665. Upon approval of the Engineer, small test sections may be cast for sample extraction along with each placement to avoid removing cores from in-place work. Measure the cores for thickness in accordance with ASTM C174. After thickness determination, trim and measure the cores for density in the saturated condition as described in Paragraph 8.3 and 9.3 of ASTM C140. Core holes in the in-place work shall be filled with pervious concrete or other acceptable material in a manner satisfactory to the Engineer.

323.9 TOLERANCES

Mechanically sweep or vacuum pavement with clean equipment or flush with water before testing for compliance with tolerances.

Tolerance for hardened thickness, and density, reported as the average of three cores f each test panel shall be as follows:

A. Average hardened thickness from a lot shall not be more than 1/2 in. less than the specified thickness, with no single core exceeding 1 in. less than the specified thickness; nor shall the average hardened thickness be 1-1/2 in. more than the specified thickness.

B. Average hardened density from a lot shall be within ± 5 lbs/ft^3 of the average hardened density of the test section(s) from Section 323.4.

C. Unless otherwise specified in the Special Provisions, Pervious Concrete shall have a minimum infiltration rate of 50 inches per hour when tested in accordance with ASTM C1701.

323.10 ACCEPTANCE:

Pervious concrete does not look or behave like typical concrete or asphalt. The finished surface shall be open and varied to permit permeability. Minor surface irregularities and moderate amounts of surface raveling and color variations are normal and acceptable. Pervious concrete shall have no visible excess cement paste, tears, or gouges. Roller constructed joints shall have smooth, rounded, and uniformly compacted edges. Saw cut joints shall not contain cement paste or dust nor exhibit evidence of spalling.

Acceptance will be based on conformance to the specifications. When a lot is outside one of more of the tolerances in Section 323.9, the lot shall be subject to rejection, removal, and replacement at the Contractor's expense, unless accepted by the Engineer.

323.11 PAYMENT:

Payment for pervious concrete shall be made at the contract unit price per square foot for each thickness shown on the plans.

- End of Section -

Revised 2018

SECTION 324

PORTLAND CEMENT CONCRETE PAVEMENT (PCCP)

324.1 DESCRIPTION:

This item shall consist of construction of a pavement composed of plain jointed portland cement concrete on a prepared subgrade. The Contractor shall furnish all labor, materials and equipment necessary for the construction of the pavement in accordance with these specifications and in reasonably close conformity to the lines, grades, thicknesses and details indicated by the plans or as established by the Engineer. All tests shall be performed by a laboratory approved by the Engineer.

324.2 MATERIALS:

324.2.1 Portland Cement Concrete: Portland cement concrete shall conform to the applicable requirements of Section 725 and the additional requirements of this section.

Concrete shall comply with Table 725-1 for Class AA, 4000 psi unless otherwise specified by the Engineer.

The maximum concrete slump shall be as determined by the approved mix design in accordance with Section 725.9(A)(1).

324.2.2 Reinforcement: Tie bars shall be deformed billet steel reinforcing bars conforming to the requirements of ASTM A615, Grade 40.

Dowel or load transfer bars shall conform to the requirements of ASTM A615, Grade 40. An approved support system shall be used to hold bars in position.

324.2.3 Curing Materials: Materials for curing concrete shall conform to the requirements of Section 726.

324.2.4 Joint Materials: Joint sealant shall be poured type, conforming to the requirements of Section 729.2 or as approved by the Engineer. Preformed expansion joint filler shall conform to the requirements Section 729.1 or as approved by the Engineer.

324.3 CONSTRUCTION METHODS:

324.3.1 General: Pavement shall be constructed with mechanical equipment utilizing stationary side forms or by the use of slipform paving equipment without stationary side forms. Manual methods of placing and finishing concrete with stationary side forms may be permitted by the Engineer for areas inaccessible for mechanical equipment.

All curb and gutter shall have the same class of concrete as the adjacent PCCP. Gutter sections shall have the same thickness as the PCCP section. All curbs or combined curb and gutter joints shall align with roadway joints.

324.3.2 Equipment: Design, capacity, and mechanical condition of equipment and tools necessary for handling materials and performing all parts of the work shall be approved by the Engineer. Equipment shall be at the jobsite sufficiently ahead of the start of concrete paving operations to permit thorough examination and approval by the Engineer prior to start of concrete paving.

Equipment used to place concrete may consist of one or more machines, shall be capable of uniformly distributing and consolidating the concrete as it is placed without segregation and shall be capable of producing concrete pavement which will conform to the required cross-section with a minimum of hand work. The number and capacity of machines furnished shall be adequate to perform the work required at a rate equal to the concrete delivery rate.

Vibrators shall be used to consolidate concrete; the rate of vibration shall be not less than 3,500 cycles per minute for surface vibrators and not less than 8,000 cycles per minute for internal vibrators. Power to vibrators mounted on mechanical equipment shall be so connected that vibration ceases when forward or backward motion of the machine is stopped. Contractor shall furnish a tachometer or other suitable device for measuring and indicating the frequency of vibration.

Slipform pavers shall be equipped with high frequency internal vibrators mounted with axes either parallel or normal to pavement alignment for the full paving width. Vibrators mounted with axes parallel with pavement alignment shall be spaced at intervals not to exceed 24 inches, measured center-to-center. Vibrators mounted with axes normal to pavement alignment shall be spaced so that lateral clearance between individual vibrating units does not exceed 6 inches.

SECTION 331

MICROSURFACING SPECIFICATIONS

331.1 GENERAL:

The work covered by this specification consists of furnishing all labor, equipment, and materials for the application of a "quick traffic solid/polymer microsurface."

This specification covers the equipment and construction procedures for rut filling and/or resurfacing of existing paved surfaces. The microsurface shall be a mixture of cationic polymer modified asphalt emulsion, mineral aggregates, mineral filler, water and other additives properly proportioned, mixed and spread on the pavement surface.

331.2 MATERIALS:

The Contractor shall supply all materials necessary for the performance of the work in accordance with the specifications. The asphalt emulsion, aggregate, and mineral filler shall be as specified in Section 714. Materials shall be approved by the Engineer prior to the start of construction. When requested by the Engineer, Certificates of Compliance shall be provided for each delivery of emulsion.

The Contractor shall be responsible for the safety of all materials of which he has taken delivery until they are in place on the road, and shall take all necessary precautions to avoid loss by fire or theft, or damage by water, and shall bear the cost of replacing any such material that is lost, spilt, destroyed or damaged after delivery.

331.3 PROPORTIONING:

The microsurface shall be proportioned in accordance with the mix design. Calibrated sign flowmeters shall be provided to measure both the addition of water and additives to the pugmill. Emulsion and cement flow shall be tied directly to aggregate flow. All additive flows shall be calibrated.

331.3.1 Performance: The microsurface mixture shall be proportioned per the mix design to ensure:

(A) Trafficability - the material will permit controlled traffic without damage to the surface within thirty (30) minutes and uncontrolled traffic without damage within sixty (60) minutes, per Section 331.4.2.2.

(B) Prevent development of bleeding, raveling, separation or other distress for seven (7) days after placing the microsurface.

331.4 MIX DESIGN:

331.4.1 General:

331.4.1.1: The Contractor shall provide a job mix formula from an approved laboratory and present certified test results for the Engineer's approval. Compatibility of the aggregate and polymer modified emulsion shall be certified by the emulsion manufacturer. All the materials used in the job mix formula shall be representative of the materials proposed by the Contractor for use in the project.

331.4.1.2: All the products used in the construction shall have certifications from the suppliers and they shall be given to the Engineer upon delivery to the project.

331.4.1.3: Mix design and proportioning will be approved by the Engineer prior to the start of the project.

331.4.2: Specifications:

331.4.2.1: The Engineer shall approve the mix design prior to use. The specification limits are as follows:

Residual Asphalt	(ASTM D244)	6% - 11.5% by dry weight of aggregate
Mineral Filler	(ASTM C136)	0.1% - 1% by dry weight of aggregate

Polymer Content/Type	4% min. (see Section 714.4)
Additive	As required for mix properties
Water	As required for mix properties
Aggregate Grading	Meets Section 331.4.2.4
Consistency (ISSA T-106)	2.5 to 3.0 cm
Traffic Time	See Section 331.4.2.2
Abrasion Loss (ISSA TB-100)	75 g/ft^2 maximum
Adhesion (ISSA TB-114)	90% minimum
Loaded Wheel Sand Adhesion	See Section 331.4.2.3

331.4.2.2 Modified Cohesion Test (ISSA TB-139): Furnish laboratory test data showing the mix design to be trafficable thirty (30) minutes after application at 77 F conforming to the following criteria in accordance with test methods described in the applicable specifications.

Set Time Test: 30 minutes	12 kg-cm minimum.
Early Rolling Traffic Time: 60 minutes	20 kg-cm minimum.

331.4.2.3 Loaded Wheel Sand Adhesion Test (ISSA TB-109): Furnish laboratory test data showing the mix design conforming to the following criteria in accordance with test methods described in the appropriate specifications.

Vehicles/day	Maximum Sand Adhesion
0-30	70 g/ft^2
250-1500	60 g/ft^2
1500-3000	55 g/ft^2
greater than 3000	50 g/ft^2

331.4.2.4 The laboratory shall further report the quantitative effects of moisture content in the unit weight of the aggregate (bulking effect). The report must clearly show the theoretical recommended proportion of aggregate, mineral filler (Min. & Max.), water (Min. & Max.), additive(s), and asphalt, and how the proportions are based (dry aggregate weight, total mix, etc.).

331.5 TESTING: Samples for quality assurance will be taken throughout the project per ISSA TB101 for testing by an approved laboratory as required by the Engineer. Materials with test results not meeting these specifications shall be corrected immediately. Testing shall be at the expense of the Agency for the following:

(A) Asphalt content
(B) Aggregate gradation
(C) Percent polymer content and type—certified by supplier

331.6 EQUIPMENT:

331.6.1 General: All equipment, tools and machines used in the performance of this work shall be maintained in satisfactory working condition at all times to ensure a high quality product.

SECTION 337

ASPHALT PAVEMENT CRACK SEALING AND CRACK FILLING

337.1 DESCRIPTION:

This work consists of furnishing and placing sealant or filler material in Contractor prepared cracks and joints of asphalt concrete pavements. All cracks and joints, including the space between asphalt concrete pavement and concrete curb and gutter, which have a clear opening of one-quarter inch (¼") or greater, shall be sealed for the length of the crack that equals or exceeds one-eighth inch (⅛") in width.

337.2 MATERIALS:

337.2.1 Material for Category 1 Cracks: Cracks and joints which have a clear opening ranging from one-quarter inch (¼") to one and one-half inches (1½") shall be classified as category 1 cracks. Sealant materials for category 1 cracks shall be a premixed, single component mixture of asphalt cement, aromatic extender oils, polymers, and granulized rubber in a closely controlled manufacturing process. Materials shall conform to the following specifications when heated in accordance with ASTM D5078 and the manufacturer's maximum safe heating temperature.

TEST	REQUIREMENT
Cone Penetration (ASTM D5329)	20-40
Resilience (ASTM D5329)	30% Minimum
Softening Point (ASTM D113)	210°F (99°C) Minimum
Ductility, 77°F (25°C) (ASTM D113)	30 cm Minimum
Flexibility (ASTM D3111 *Modified)	Pass at 30°F (-1°C)
Flow 140°F (60°C) (ASTM D5329)	3 mm Maximum
Brookfield Viscosity 380°F (193°C) (ASTM D2669)	90 Poise Maximum
Asphalt Compatibility (ASTM D5329)	Pass
Bitumen Content (ASTM D4)	60% Minimum
Tensile Adhesion (ASTM D5329)	400% Minimum
Maximum Heating Temperature	400°F (204°C)
Minimum Heating Temperature	380°F (193°C)
Flash Point (ASTM D92)	450°F Minimum

*Specimen bent 90° over a 1-inch mandrel within 10 seconds.

337.2.2 Material for Category 2 Cracks: Cracks and joints which have a clear opening ranging from one and one-half inches (1½") to three inches (3") shall be classified as category 2 cracks. Filler material for category 2 cracks shall be hot applied, pourable, high bonding mastic for application in unconfined areas and for vertical-side recessed configurations. Upon curing the material shall provide a flexible waterproof seal. The material shall be traffic ready in thirty minutes or less when installed in accordance with the manufacturer's instructions. Agency approved material shall be used for sealing category 2 cracks.

337.2.3 Material for Category 3 Cracks: Cracks and joints which have a clear opening greater than three inches (>3") shall be classified as category 3 cracks. Material for filling category 3 cracks shall be asphalt concrete 3/8" Marshall mix compliant with Section 710 and have 100% of the aggregate passing the 3/8" sieve.

337.2.4 Product Submittals: Prior to application of category 1 crack sealant and category 2 crack filler material, the Contractor shall submit to the Engineer for approval the material manufacturer's product specifications and installation recommendations. Installation recommendations shall include surface preparation, product installation, and curing requirements. For sealant material, a Certificate of Compliance (per Section 106) shall be submitted to the Engineer. Asphalt mix design for category 3 crack filler material shall be submitted to the Engineer for approval.

Prior to and during production, when requested by the Engineer, the Contractor shall provide material samples to the Engineer for testing to verify the quality of the materials and to ensure conformance with specifications.

Revised 2018

337.3 CLEANING AND PREPARING CRACKS OR JOINTS:

Immediately prior to application of sealant, all cracks and joints shall be cleaned of debris and dust. Cracks and joints shall be vacuumed during final cleaning.

337.3.1 Routing: When specified in contract documents, cracks shall be routed to remove loose asphalt edges creating a stable surface for sealant attachment. Routing shall remove at least 1/8" from each side and produce vertical, intact surfaces with no loosely bonded aggregate. Routing of joints and cracks shall produce clean stable edges extending to a depth of at least three quarters of an inch (¾"). Routed surfaces of cracks are subject to acceptance or rejection at the Engineer‘s discretion.

337.3.2 Vacuuming: Final cleaning shall thoroughly clean cracks and joints to a minimum depth of 1" for cracks that are ¾" or narrower and to the full asphalt depth for cracks that are wider than ¾". Surfaces are to be inspected to assure adequate cleanliness and dryness.

High pressure, 90 psi minimum, dry oil free compressed air shall be used for final cleaning and dust removal from cracks. The high pressure tool shall be integral with a vacuum unit to collect the dust and residue. Both sides of the crack or joint shall be cleaned.

337.4 APPLICATION OF CRACK SEALANTS AND CRACK FILLERS:

337.4.1 Weather: In no case shall crack sealant or fillers be placed during damp roadway conditions such as wet roadway surfaces or with damp material inside the cracks. Operations stopped by the Engineer due to weather, shall be at no additional cost to the contracting Agency. If installing at night, ensure that dew is not forming on the pavement surface.

Sealant and filler material shall only be applied when pavement temperature exceeds 40°F (4°C). If pavement temperature is lower than 40°F (4°C), it may be warmed using a heat lance that puts no direct flame on the pavement.

337.4.2 Temperature: Sealant and category 2 filler material temperatures are to be maintained at the maximum heating temperature recommended by the manufacturer.

337.4.3 Sealant Equipment: The melter applicator unit shall be a self-contained double boiler device with the transmittal of heat through heat transfer oil. It shall be equipped with an on board automatic heat controlling device to permit the attainment of a predetermined temperature, and then maintain that temperature as long as required. The unit shall also have a means to vigorously and continuously agitate the sealant to meet the requirements of Appendix X1.1 of ASTM D6690. The sealant shall be applied to the pavement under pressure supplied by a gear pump with a hose and wand and direct connecting applicator tip. The pump shall have sufficient pressure to apply designated sealant at a rate of at least three (3) gallons (11.4 L) per minute. Melter applicators shall be approved for use by the sealant manufacturer.

337.4.4 Placement of Sealant and Crack Filler Materials: Sealant and crack filler materials shall be applied in cracks and joints uniformly from bottom to top and shall be filled without formation of entrapped air or voids.

Sealant placement in cracks and joints shall slightly overfill the crack or joint then be leveled with a 3" sealing disk or V-shaped squeegee to create a neat band extending approximately 1" on each side of the crack or joint for surface waterproofing. The band shall be as thin as possible and shall not extend more than 1/8-inch above the pavement surface. If the pavement is to be overlaid with hot mix asphalt within six months of sealant application, sealant placement shall be recessed ¼" in the crack with no over band.

Application of category 2 crack filler material shall comply with the material manufacturer's installation recommendations including but not limited to surface preparation, application equipment, and application procedures. No filler material shall be installed until all cracks to be filled have been inspected and approved by the Engineer.

All machines, tools, and equipment for installation of category 3 crack filler shall be subject to the Engineer's approval. Prior to application of category 3 crack filler, the prepared crack shall be inspected and approved by the Engineer. Tack coat shall be applied to both sides of the crack. Hand tamp, vibratory plate compactor and rollers are acceptable for final compaction of filler material. Depending on depth of crack, lower lifts shall be compacted using a steel rod with a 1½" diameter head.

During and after placement of sealant and crack filler materials, the Contractor shall protect against harm to persons or animals that may be exposed to the hot material.

337.4.5 Opening to Traffic: Sealant and mastic materials shall not be exposed to traffic until fully cured. If the area must be opened to traffic, blotter material shall be applied to the surface of all uncured material.

All sealant filled cracks that have a clear opening of 1½ inches or greater shall have blotter material applied prior to opening to traffic.

On two lane roads or where traffic may come in contact with hot sealant or mastic before it cures, a blotter or specialized bond breaking material shall be used to prevent asphalt bleeding and/or pickup of material by vehicular traffic. Blotter material shall be compatible with the crack sealant or mastic and any surface treatment being used.

337.5 UNACCEPTABLE WORK:

The Contractor, at no additional cost to the contracting Agency, shall correct unacceptable work.

Unacceptable work shall include, but not be limited to, unsealed or unfilled cracks, material wastage on the sides of the roadway, and excess quantities of material on the roadway that adversely affects driving.

The Contractor shall not progress to a new area until the unacceptable work is corrected to the satisfaction of the Engineer. Correction of unacceptable work shall be accomplished within five working days after notification from the Engineer of the unacceptable work.

337.6 MEASUREMENT:

The Contractor shall meet with the Engineer or the Engineer's designated representative on a daily basis and supply a signed daily report indicating the date and identifying for each road segment:

- The linear feet of crack routing performed.
- The amount of category 1 crack sealing material applied in total pounds and the total square yards of pavement sealed.
- The amount in pounds of category 2 crack filling material installed.
- The linear feet of category 3 cracks filled.

Crack routing will be measured by the linear foot. The measurement length will be the length of routed crack, not the length of each routed side.

Measurement for payment of category 1 crack sealing will be by the square yards of pavement surface area crack sealed or by the pounds of sealant placed.

Category 2 crack filling will be measured by the pounds of filler material placed or as otherwise indicated in the fee proposal.

Category 3 crack filling will be the measured linear feet of cracks filled.

337.7 PAYMENT:

Payment for accepted pavement crack routing, sealing, and crack filling will be at the contracted unit prices. Payment shall be full compensation for furnishing all labor, materials, equipment, tools, and incidentals used for surface preparation, placement of materials, and cleanup.

- ***End of Section*** -

SECTION 340

CONCRETE CURB, GUTTER, SIDEWALK, CURB RAMPS, DRIVEWAY AND ALLEY ENTRANCE

340.1 DESCRIPTION:

The various types of concrete curb, gutter, sidewalk, curb ramps, driveways and alley entrances shall be constructed to the dimensions indicated on the plans and standard detail drawings.

340.2 MATERIALS:

Concrete shall conform to the requirements of Section 725. Concrete class shall be as noted on the standard details.

Expansion joint filler shall be ½-inch thick preformed bituminous material in compliance with Section 729, unless otherwise noted.

340.2.1 Detectable Warnings: Detectable warnings shall consist of raised truncated domes aligned in a square grid pattern in conformity to the Americans with Disabilities Act Accessibilities Guidelines (ADAAG). Truncated domes shall have the following nominal dimensions: base diameter of 1.0 inches (0.9 inches minimum) top diameter of 50 percent of the base diameter minimum to 65 percent of the base diameter maximum, and height of 0.2 inches. Dome center-to-center spacing of 2.35 inches, measured between the most adjacent domes on the square grid. Dome center-to-center spacing for radial installations shall be 1.6 inches minimum and 2.4 inches maximum with a base-to-base spacing of 0.65 inches minimum. Detectable warning panels shall be installed with the dome spacing and alignment maintained across adjoining panels.

Detectable warnings shall contrast visually with adjoining surfaces, either light-on-dark or dark-on-light. Specific colors to be used shall be approved by the local jurisdictional agency prior to installation. Detectable warnings shall have integral color throughout.

Detectable warning materials shall be durable with a non-slip surface not subject to spalling, chipping, delamination, or separation. All detectable warnings shall be approved by the local jurisdictional agency prior to installation.

Detectable warnings shall be either placed in freshly poured concrete (wet-set) or recessed into pre-formed concrete. Detectable warnings using wet-set placement shall have the bottom of the detectable warning continuously supported by the underlying concrete with no air voids. Detectable warnings placed into pre-formed recesses in the concrete shall have a firm fit without gaps along the edges, and be able to resist movement (i.e. sliding, rocking, or lifting) once in place.

340.3 CONSTRUCTION METHODS:

Existing concrete shall have a clean vertical edge where it is to be joined by new construction. Sawcutting is required when the existing matching edge is not a straight vertical edge.

340.3.1 Subgrade Preparation: The subgrade shall be constructed and compacted true to grades and lines shown on the plans and as specified in Section 301. All soft or unsuitable material shall be removed to a depth of not less than 6 inches below subgrade elevation and replaced with material satisfactory to the Engineer. Removal and replacement of soft or unsuitable materials will be paid for as extra work.

Subgrade classified as marginally expansive or expansive as defined in Table 340-1 shall be treated as follows unless the construction documents require alternative measures for mitigation of expansive soils. The upper 6 inches of marginally expansive soils shall be compacted per Section 301.3 at a moisture content between 0% to 3% above optimum moisture per ASTM D698. Expansive soils shall be considered unsuitable and shall be treated or removed and replaced with material as directed by the Engineer. Alternate corrective measures contained in an existing geotechnical report or new site analysis can be submitted to the Engineer for approval. The submittal of alternative corrective measures must be a recommendation of an

Arizona registered engineer and have the professional seal affixed.

Table 340-1			
Description	Percent Fines (– #200 sieve) (1)	Plasticity Index (2)	Additional Testing
Non-expansive	> 20%	≤ 15	None
Potentially expansive		> 15	Perform Swell Test (3)
Description	% Swell (3)		
Non-expansive	< 1		
Marginally expansive	1 – 3		
Expansive	> 3		

(1) Tested in accordance with ASTM C117
(2) Tested in accordance with AASHTO T-90 (wet prep per AASHTO T-146)
(3) Swell Test: Samples for swell tests shall be re-molded in accordance with ARIZ 249 (ADOT Materials Testing Manual) to 95% of maximum dry density at optimum moisture as determined by ASTM D698 and tested for one-dimensional expansion in accordance with the applicable portions of ASTM D4546 applying a surcharge of 144 psf.

Material removed for construction shall not be placed on the base and/or surfacing material already in place on the roadway nor shall the excavated material be placed in such a manner as to interfere with access to property or traffic flow in the street.

340.3.2 Formwork: Concrete curbs, gutters and sidewalks shall be constructed by the conventional use of forms, or may be constructed by means of an appropriate machine when approved by the Engineer.

If machines designed specifically for such work and approved by the Engineer are used, the results must be equal to or better than that produced by the use of forms. If the results are not satisfactory to the Engineer, the use of the machine shall be discontinued and the Contractor shall make necessary repairs at his own expense. All applicable requirements of construction by use of forms shall apply to the use of machines.

Forms conforming to the dimensions of the curb, gutter, sidewalk, curb ramps, driveway, and alley entrance shall be carefully set to line and grade, and securely staked in position. The forms and subgrade shall be watered immediately in advance of placing concrete.

Forms shall be thoroughly cleaned each time they are used, and shall be coated with a light oil, or other releasing agent of a type which will not discolor the concrete.

340.3.3 Concrete Placement: The concrete shall be thoroughly spaded away from the forms so that there will be no rock pockets next to the forms. The concrete may be compacted by mechanical vibrators approved by the Engineer. Tamping or vibrating shall continue until the mortar flushes to the surface, and the coarse aggregate is below the concrete surface. The surface shall then be struck off and worked to grade and cross section with a float.

If machine placement is used, the machine shall place, consolidate and finish the concrete in one complete pass, requiring a minimum of hand finishing producing a dense and homogeneous section. A form shall trail behind the machine for such a distance that no appreciable concrete slumping will occur. Final finishing shall be as specified in Section 340.3.7, Form Removal and Finishing.

340.3.4 Joints: Shall be constructed in a straight line, vertical plane and perpendicular to the longitudinal line of the sidewalk, curb and gutter, single curb, etc., except in cases of curved alignment, where they shall be constructed along the radial lines of the curve.

Curb and gutter joints shall match the location of concrete pavement joints when abutting concrete pavement.

The space between joints in curbs and gutters (space between contraction joints or between contraction and expansion joints) shall not exceed ten feet.

Sidewalk that abuts curb or gutter shall have joints that match the curb or gutter joints.

The space between sidewalk joints shall not exceed 125% of the sidewalk width (for example: maximum joint spacing for 5 foot wide sidewalk is 6.25 feet).

340.3.4.1 Expansion Joints: Expansion joints shall be constructed to the full depth and width of the concrete. The expansion joint material shall extend fully through the concrete and one inch into the subgrade with the top of the expansion joint material one-quarter inch below the top surface. Expansion joint material shall be secured in place prior to placement of concrete.

Expansion joints shall be installed along all abutting structures to provide complete separation from the structure.

Sidewalk, curb, and gutter expansion joints shall be installed at all radius points, at both sides of each driveway, at both sides of each alley entrance. The maximum distance between expansion joints shall be 50 feet.

340.3.4.2 Contraction Joints: Unless otherwise specified, the large aggregate in contraction joints shall be separated to either side of the joint for a minimum depth equal to 25% of the concrete thickness; the finished depth shall be a minimum of 3/4 inch.

340.3.5 Edges: All exposed edges shall be shaped with a suitable tool to form edges having the shape as indicated on the referenced detail.

340.3.6 Detectable Warnings: Detectable warnings shall be installed perpendicular to the direction of pedestrian/wheelchair travel and have a minimum width of 24 inches measured perpendicular to the edge of the roadway or rail crossing. The base surface of detectable warnings shall be installed flush with the adjacent walkway surface; the truncated domes shall extend above the walkway surface. The boundary between detectable warnings and the adjacent walkway shall provide a flush uniform surface that will not cause ponding of water nor present a tripping hazard. Partial domes at the edge of the detectable warning shall be made flush to match the base surface of the detectable warning. Detectable warnings installed on curb ramps shall extend the full width of the ramp depression.

When detectable warnings are modules inset into the curb ramp, the bottom surface of the sidewalk shall be lowered a distance equal to or greater than the module thickness to maintain the minimum sidewalk thickness. The sidewalk bottom surface shall have a minimum transition taper length of 12” between the thickened and normal depth sections of sidewalk. The detectable warning surface shall be located so that the edge nearest the curb line is 6 inches minimum and 8 inches maximum back from the face of curb.

Detectable warning surfaces for pedestrian at-grade rail crossings not located within a street or highway shall be installed on each side of the rail crossing, located as shown on plans. Detectable warnings shall extend the full width of the pedestrian walkway.

340.3.7 Form Removal and Finishing: The front face form shall not be removed before the concrete has taken initial set and has sufficient strength to carry its own weight. Gutter forms and rear forms shall not be removed until concrete has hardened sufficiently to prevent damage to the edges. Any portion of concrete damaged while stripping forms shall be repaired or replaced at no additional cost to the Contracting Agency.

After the forms are removed, the joints shall be tooled and the surface finished with a float to remove all imperfections. As needed, retool joints after finishing to prevent groove bonding. In all cases, the resulting surface shall be smooth and of uniform color with all rough spots, projections, and form stakes removed. No plastering of the concrete will be allowed. The concrete work shall have a true surface; shall be free from sags, twists, or warps; have a uniform appearance; and be true to the lines, grades, and configurations indicated on the drawings.

Surfaces shall be light broom finished; flow lines shall be troweled for a smooth finish.

If the evaporation rate on the concrete surface exceeds the rate of bleeding of the concrete due to weather conditions, materials used, or for any other reason, and there is any likelihood of the fresh concrete checking or cracking before the curing operation, measures shall be taken to prevent the rapid evaporation of water from the surface during finishing operations. When allowed by the Engineer, the addition of water to the surface may be permitted as an indirect fog spray with approved spray equipment immediately after screeding and/or between finishing operations. A commercial evaporation reducer that forms a monomolecular film may also be sprayed onto the concrete surface in accordance with the manufacturer’s recommendations. At no time will free water/evaporation reducer be worked into the concrete surface. Approved measures shall continue until curing operations per Section 340.3.8, Curing, are started in the particular area affected.

The Contractor shall stamp the company name and year on each end of the sidewalk or curb ramp constructed. The letters shall not be less than 3/4 inch in height and the depth of the stamped impression shall be between 1/8-inch and 1/4-inch.

340.3.8 Curing: As soon after the completion of the finishing operation as the condition of the concrete will permit, all exposed surfaces shall either be sprayed with a pigmented curing compound or sealed with a material conforming to Section 726. Curing compound shall be applied under pressure through a spray nozzle in such manner and quantity as to entirely seal all exposed concrete surfaces with a uniform film. The membrane shall be applied in two applications for a total coverage of 150 square feet per gallon. Concrete surfaces shall be kept damp until the curing compound is applied. Should the curing compound seal be broken or damaged before the expiration of 10 days after the placing of the concrete, the break shall be immediately repaired by the application of additional curing compound over the damaged area.

The need for adequate curing is greatest during the first few hours after placement of the concrete.

340.3.9 Tolerances: The face, top, back, and flow line of the curb and gutter shall not deviate in excess of 1/4-inch over 10 feet, as tested with a 10-foot straightedge or curve template, longitudinally along the surface.

The surface of concrete sidewalk or curb ramp shall not deviate in excess of 1/8-inch over 5 feet as tested with a 5-foot straightedge except for the 1/4-inch recess of the preformed material in expansion joints.

All finished concrete widths and alignments shall not deviate from the plans, typical sections or standard details referenced within the construction documents, by more than 1/2 inch.

When required by the Engineer, gutters shall be water tested. The Contractor shall establish flow in the length of gutter to be tested by supplying and distributing water from a hydrant, tank truck or other source. After the supply of water is shut off and water has stopped flowing, the gutter shall be inspected for evidence of ponding. The work shall be deemed deficient if water is found ponded in the gutter to a depth greater than 1/2 inch or ponding extends onto the adjacent asphalt pavement.

Areas between elevations shown on the plans shall be straight graded or smoothly transitioned through a vertical curve in a manner approved by the Engineer or as otherwise indicated on the construction documents.

Slopes of Pedestrian facilities shall not exceed the maximum grades indicated in ADA guidelines: sidewalk cross slope of 2%, ramp slope of 8.33%, ramp and landing cross slope of 2% and flared side (wing) slope of 10%.

340.3.10 Deficiencies: Any section of the work deficient in depth or not conforming to the plans or specifications shall be removed and replaced by the Contractor at no additional cost to the Contracting Agency. Replacement or reconstruction shall be from joint to joint.

Concrete work that does not comply with requirements of Section 340.3.9, Tolerances, shall be removed and replaced. Remove and replace gutters that exceed the ponding tolerance. Grinding shall only be allowed if approved by the Engineer.

340.4 BACKFILLING:

Unless otherwise specified the Contractor shall backfill behind the curbs, sidewalk or curb ramps with soil native to the area to the lines and grades shown on the plans.

340.5 MEASUREMENT:

340.5.1 Concrete Curbs and Gutters: The various types of curb and gutter shown on the plans and in the proposal will be measured along gutter flow line through inlets, catch basins, driveways, curb ramps, etc., by the lineal foot to the nearest foot for each type, complete in place. Measurement for curb terminations and transitions shall be included with the linear measurement of the various types of curb or curb and gutter as shown on the plans and in the proposal.

Curb and gutter type shall be based on the configuration of the final exposed surfaces. The increased curb and gutter depth required at valley gutter aprons or driveways shall not be measured as a separate pay item; any additional Contractor cost shall be included in the unit cost associated with the valley gutter, driveway or other associated item.

340.5.2 Concrete Flat Work: Sidewalks, driveways, alley intersections, valley gutters and aprons will be measured to the nearest square foot complete in place.

340.5.3 Curb Ramp Installations: Curb ramp installations shall be measured as complete installed units. Curbing (single curb or curb and gutter) located at the edge of roadway shall be measured and paid for separately. The surface area of curb ramps shall not be included in the measured quantity for sidewalk. Detectable warnings are an integral part of curb ramp installations and shall not be measured. Ramp curbs located behind the walkway are an integral part of parallel curb ramp and combination curb ramp installations and shall not be measured.

Unless otherwise indicated by standard details, curb ramps located within a curb return shall include the entire curb return area excluding the edge of roadway curbing. Curb ramp installations shall be categorized and measured by curb return radius, the number (one or two) of curb ramps contained within the return, and the type of curb ramps (perpendicular, parallel, or combination).

Each curb ramp not located within a curb return shall be categorized by type and measured as a complete unit. Perpendicular curb ramps shall include the area from the back of curb between the outer edges of the ramp wings to the top of the curb ramp, ending prior to and excluding the top landing. The landing area at the top of the perpendicular curb ramp is to be included in the measured sidewalk area. Parallel and combination curb ramps shall include the ramp curb and all surfaces between the ramp curb and the back edge of the roadway curbing.

340.6 PAYMENT:

Payment will be made in accordance with the unit prices as set forth in the proposal. Such payment shall include full compensation for furnishing all labor, material, tools and equipment and accomplishing all work in conformance with the contract documents.

Over-excavation of soft, expansive or unsuitable materials and installation of granular materials will be paid separately and not included within the above measured pay items.

- End of Section -

PART 400

RIGHT-OF-WAY AND TRAFFIC CONTROL

Section	Last Revised	Title	Page
401	1998	Traffic Control	401-1
405	2015	Survey Monuments	405-1
410	1998	Precast Safety Curbs	410-1
415	2018	Flexible Metal Guardrail	415-1
420	1998	Chain Link Fences	420-1
424	1998	Parkway Grading	424-1
425	1998	Topsoils	425-1
430	2014	Landscaping and Planting	430-1
440	1999	Sprinkler Irrigation System Installation	440-1

This Page Reserved for Future Use

SECTION 415

FLEXIBLE METAL GUARDRAIL

415.1 DESCRIPTION:

The work under this section shall consist of furnishing all materials, equipment, and labor needed to construct new guardrail of the type indicated and at the locations shown on the plans.

Guardrail end treatments shall be as specified on the plans or special provisions.

415.2 MATERIALS:

The rail elements, bolts, nuts and other fittings shall conform to the specifications of AASHTO M 180, except as modified in this section. The rail metal shall conform to AASHTO M 180, Type I, Class A and in addition to the requirements of AASHTO M 180, shall withstand a cold bend, without cracking of 180 degrees around a mandrel of a diameter equal to 2-1/2 times the thickness of the plate.

Guardrail specified to be constructed with weathering steel (sometimes called Corten steel) shall conform to the requirements of AASHTO M 180, Type IV, Class A and use ASTM A588 steel.

Three certified copies of mill test reports of each heat from which the rail element is formed shall be furnished to the Engineer.

All materials shall be new, except as otherwise noted on the plans or special provisions.

Railing Parts furnished under these specifications shall be interchangeable with similar parts regardless of source. All surfaces of guardrail elements that are exposed to traffic shall present a uniform, pleasing appearance and shall be free of scars, stains or corrosion.

Nails shall be 16 penny common galvanized.

Bolts shall have shoulders shaped to prevent the bolts from turning.

Unless otherwise specified the rail elements, terminal sections, bolts, nuts, and other fittings shall be galvanized in accordance with Section 771. Where galvanizing has been damaged, the coating shall be repaired in accordance with Section 771.

Guardrail reflector tabs shall be either 3003-H14 Aluminum strip 0.063 ± 0.004 inches thick, or steel strip 0.078 ± 0.008 inches thick galvanized in accordance with ASTM A653 coating designation G 90. The reflector material shall be high-reflectivity sheeting, either silver-white or yellow and shall conform to the requirements of the Arizona Department of Transportation Standard Specifications for Road and Bridge Construction. Adhesive for sheeting attachment to the metal tab shall be of the type and quality recommended by the sheeting manufacturer. Reflector tabs shall conform to the Reflector Tab Detail of Maricopa County Department of Transportation Standard Detail 3002.

Timber for posts and blocks shall be rough sawn (unplanned) or S4S with the nominal dimensions indicated. Any species or group of woods graded in accordance with the requirements for Timber and Posts of the Western Wood Products Association may be used. Timber shall be No. 1 or better, and the stress grade shall be as follows:

6” by 8” Post and Block	1200 psi
8” by 8” Post and Block	900 psi
10” by 10” Post and Block	900 psi

When the plans show guardrail systems using 8” by 8” timber posts and blocks, the Contractor may use 8 1/4” nominal size posts and blocks with a stress grade of 825 pounds per square inch.

At the time of installation, the dimensions of timber posts and blocks shall vary no more than plus or minus 1/2” from the nominal dimensions as specified on the project plans. The size tolerance of rough sawn block in the direction of the bolt holes shall vary no more than plus or minus 3/8”.

All timber shall have a preservative treatment as per the requirements of AASHTO M 133.

Structural steel shapes shall conform to the requirements of ASTM A36 and be galvanized in conformance with the appropriate requirements of AASHTO M 111. Dimensions shall meet the dimensional requirements of the American Institute of Steel Construction.

Steel tubes shall conform to the material requirements of ASTM A500 or A501 and be galvanized in conformance with the requirements of AASHTO M 180, Type 1.

415.3 CONSTRUCTION REQUIREMENTS:

415.3.1 General: The construction of the various types of guardrail shall include the assembly and erection of all component parts complete at the locations shown on the project plans or as directed by the Engineer. Guardrail systems shall be either the 28-inch Strong Post W-Beam Guardrail system as detailed in the 2800 series of Maricopa County Department of Transortation Standard Details or the 31-inch high Midwest Guardrail System (MGS) as detailed in the 3100 series of Maricopa County Department of Transportation Standard Details. Strong Post W-Beam Guardrail elements and Midwest Guardrail System elements shall not be mixed within any guardrail run unless a transition section is specified by the design documents.

Posts shall be as indicated by plans, standard details, or special provisions. Only one type and size of post and block shall be used for any one continuous length of guardrail.

Terminal sections shall be installed in accordance with the manufacturer's recommendations.

Workmanship shall be equivalent to good commercial practice and all edges, bolt holes and surfaces shall be free of torn metal, burrs, sharp edges and protrusions.

The various types of guardrail shall be constructed with wood posts and wood blocks, except as otherwise noted on the plans.

The bolted connection of the rail element to the post shall withstand a 5,000 pound pull at right angles to the line of the railing. All metal work shall be fabricated in the shop. No punching, cutting or welding shall be done in the field, except as provided for by the project plans. All metal cut in the field shall be cleaned and the galvanizing repaired in accordance with Section 771.

Where field cutting or boring of wood posts and blocks is permitted, the affected areas shall be thoroughly swabbed with at least two passes of the same type of wood preservative as initially used.

Where wood posts with rectangular sections are used, the posts shall be set so that the longest dimension is perpendicular to the rail.

All bolts shall extend beyond the nuts a minimum of two threads, except that all bolts adjacent to pedestrian traffic shall be cut off flush to the nut.

Bolts extending more than 2" beyond the nut shall be cut off to less than ½" beyond the nut.

Unless otherwise shown on the plans, bolts shall be torqued as follows:

Diameter of Bolt	Torque, Foot/Pounds
5/8"	45-50
3/4"	70-75
7/8" and larger	120-125

All bolts, other than those specified to be torqued, shall be securely tightened.

When guardrail is being constructed under traffic, the work shall be conducted so as to constitute the least hazard to the public. Guardrail work shall be performed in the direction of traffic flow when feasible.

Any section of guardrail that is removed for modification shall be replaced within five calendar days of the date the guardrail is removed, unless otherwise directed by the Engineer. At the end of each day, incomplete guardrail sections having an exposed end toward oncoming traffic shall have an appropriate temporary protective end treatment acceptable to the Engineer set securely in place together with approved overnight traffic control devices set in place.

415.3.2 Delineation: The maximum spacing between reflector tabs shall not exceed six posts. The slotted part of the tab shall be installed under the mounting bolt head so that the Reflectorized surface of the tab faces oncoming traffic. The exposed ends of the slotted part of the tab shall be bent up against and then over the top of the bolt head. The color of the reflective portion of the barrier markers shall conform to the color of the adjacent edge line. Silver-faced reflector tabs shall be installed on the right hand side of all roadways, and yellow-faced tabs shall be installed on the left-hand side of one-way, or median divided roadways.

415.3.3 Roadway Guardrail: Wood posts shall be used for new guard rail installations unless otherwise indicated by plans or special provisions. Wood posts shall either be driven or placed in manually or mechanically dug holes; however, driven posts will not be permitted at locations where damage to the curb, gutter, sidewalk, buried items, shoulders or pavement might occur. The Engineer will be the sole judge as to whether driving of posts will be allowed. Driving of posts shall be accomplished in a manner that will prevent battering, burring, or distortion of the post. Any post which is damaged to the extent it is unfit for use in the finished work, as determined by the Engineer, shall be removed and replaced at no additional cost to the Agency.

The posts shall be firmly placed in the ground. The space around posts shall be backfilled with select earth, free of rock, placed in layers approximately 4 inches thick and each layer shall be moistened and thoroughly compacted to the density of the surrounding material. Half-sack control low strength material conforming to Section 728 may be used in lieu of select earth.

Where pavement is disturbed in the construction of guardrail, the damaged surfacing shall be repaired as approved by the Engineer.

Where a culvert or other obstacle is at an elevation which would interfere with full depth post placement the Engineer may require the use of Bolted Guardrail Anchors Nested Guardrail, MGS Long Span Installation, or other modification as may be appropriate.

Wood blocks shall be toe nailed to the wood post with one 16 penny galvanized nail on each side of the top of the block. Wood blocks shall be set so that the top of the block is no more than ½" above or below the top of the post, unless otherwise shown on the project plans.

Rail elements shall be spliced at 25 foot intervals or less. Unless otherwise shown on the project plans rail elements for 28-inch high Strong Post W-Beam Guardrail system shall be spliced at posts and rail elements for 31-inch high Midwest Guardrail System shall be spliced between posts. All rail splices shall be lapped in the direction of traffic in the nearest adjacent lane. Rail elements shall have full bearing (set flush) againsts posts. When the radius of curvature is 150 feet or less, the rail elements shall be shop curved.

The Contractor shall dispose of surplus excavated material remaining after the guard railing has been constructed.

415.3.4 Bolted Guardrail Anchors: Where the elevation of the top surface of a concrete box culvert or other similar installation prevents the placement of a post of the specified length, the posts shall be shortened and anchored in accordance with Maricopa County Department of Transportation Standard Detail 3010.

415.3.5 Nested Guardrail: This work shall consist of furnishing and constructing nested guardrail, Type 1, 2, or 3, as shown in Maricopa County Department of Transportation Standard Details 2808-1 through 2808-3.

415.3.6 MGS Long Span Installation: This work shall consist of furnishing and constructing guardrail as shown in Maricopa Department of Transportation Standard Detail 3108.

415.3.7 Guardrail to Structure Transitions: Guardrail transitions shall be constructed in accordance with requirements shown on the plans and special provisions.

415.4 MEASUREMENT:

The limits of measurement for 28-inch high Strong Post W-Beam guardrail system elements shall be as detailed in Maricopa County Department of Transportation Standard Detail 2816, unless otherwise noted on the plans or special provisions. The limits of measurement for 31-inch high Midwest Guardrail System elements shall be as detailed in Maricopa County Department of Transportation Standard Detail 3116, unless otherwise noted on the plans or special provisions. Guardrail, of the type shown on the project plans, will be measured by the linear foot along the face of the rail element from center to center of

posts, exclusive of guardrail terminals, guardrail end terminal assemblies, nested guardrail (Types 1, 2 and 3) MGS long spans, and guardrail transitions.

Delineation is considered a part of installation of guardrail and hence will not be measured as a separate item.

The accepted quantities of guardrail posts secured with bolted guardrail anchors will be measured by the unit each.

Nested guardrail, Types 1, 2, or 3, MGS long spans, and guardrail transitions will be measured by the unit each, complete in place and accepted as shown on the plans.

415.5 PAYMENT:

Payment for accepted quantities of each type of guardrail will be made at the contract unit price. Payment shall be full compensation for furnishing materials and installing guardrails, complete in place including excavation, backfill, and disposal of surplus material.

Payment for Bolted Guardrail Anchors will be at the contract unit price, and shall be full compensation for the work, complete in place, including steel brackets, hardw are, excavation, backfill, removing and replacing surfacing, cutting and fitting steel beam posts or timber posts, drilling anchor bolt holes in steel posts, timber posts, and box culverts, and disposal of surplus materials.

Payment for guardrail transitions will be at the contract unit price. Payment shall be full compensation for furnishing materials and installing guardrail transitions, complete in place including excavation, backfill, and disposal of surplus material.

- End of Section -

PART 600

WATER, SEWER, STORM DRAIN AND IRRIGATION

Section	Last Revised	Title	Page
601	2016	Trench Excavation, Backfilling and Compaction	601-1
602	2016	Trenchless Installation of Steel Casing	602-1
604	2018	Placement of Controlled Low Strength Material	604-1
605	2014	Subdrainage	605-1
607	2015	Trenchless Installation of Smooth Wall Jacking Pipe	607-1
608	2017	Horizontal Directional Drilling	608-1
610	2015	Water Line Construction	610-1
611	2015	Water, Sewer and Storm Drain Testing	611-1
615	2015	Sanitary Sewer Line Construction	615-1
616	2017	Reclaimed Water Line Construction	616-1
618	2015	Storm Drain Construction	618-1
620	2012	Cast-In-Place Concrete Pipe	620-1
621	1998	Corrugated Metal Pipe and Arches	621-1
625	2016	Manhole Construction and Drop Sewer Connections	625-1
630	2018	Tapping Sleeves, Valves and Valve Boxes on Water Lines	630-1
631	2012	Water Taps and Meter Service Connections	631-1

This Page Reserved For Future Use

602.4 DEWATERING:

All water encountered during the trenchless operation shall be disposed of by the Contractor in a manner that will not damage public or private property or create a nuisance or health problem. The cost of furnishing pumps, pipes and equipment for dewatering shall be considered incidental to the work and no additional payment shall be made.

602.5 CARRIER PIPE PLACEMENT:

The tolerances allowed for the alignment and grade of carrier pipe shall comply with requirements of Section 610, 615 or 618 as applicable. The Contractor shall be responsible to obtain the required line and grade for the carrier pipe, the carrier pipe shall not contact or rest on the casing.

Pressurized carrier pipes, (i.e. water, gas, force main) shall be placed using casing spacers, wood skids or steel pipes for rails. Casing spacers shall be installed 3 per joint minimum with 8-foot maximum spacing. The annular space between the casing and carrier line shall be left empty unless otherwise directed. When the annular space is to be filled, 3/8-inch pea gravel shall be used.

Gravity carrier pipes, (i.e. sewer, storm drain, irrigation) shall be placed using wood skids or steel pipes for rails. The annular space between the casing and carrier line shall be left empty unless otherwise directed. When the annular space is to be filled, 3/8-inch pea gravel shall be used.

Bulkheads consisting of brick and mortar or concrete shall be constructed on the ends of the casing; bulkheads shall be a minimum of 8-inches thick. Alternative casing end closures may be substituted for brick and mortar or concrete bulkheads if approved by the engineer.

PVC conduits for dry utilities, (i.e. communications, fiber, electric) shall be placed using non-metallic PVC casing spacers. The annular space between the casing and carrier line shall be filled as indicated in the contract documents.

After completing the carrier pipe installation, the Contractor shall remove all loose and disturbed material in the bore pits and backfill the pits in accordance with Sections 601 and 336.

602.6 MEASUREMENT AND PAYMENT:

Measurement for steel casing shall be the number of horizontal linear feet from the end of casing in the bore pit to the end of casing in the reception pit. Payment for steel casing shall be full compensation for furnishing all labor, material, tools, and equipment required for the trenchless installation of steel casing, complete in place including but not limited to placement of carrier pipe, annular space fill material (when required), bulkheads, and the excavation and backfilling of pits. Payment for steel casing does not include payment for the carrier pipe. A separate payment will be made for the carrier pipe and any required testing of the carrier pipe.

- End of Section -

SECTION 604

PLACEMENT OF CONTROLLED LOW STRENGTH MATERIAL

604.1 DESCRIPTION:

The work covered by this specification consists of furnishing all materials, labor and equipment for the placement of controlled low strength material (CLSM).

The type of backfill to be used shall be as specified in the special provisions, plans or by the Engineer.

The following is a brief description of the types of CLSM and their intended uses:

1/2 SACK: General trench backfill in areas where future excavation into the backfill with conventional hand tools is anticipated or in areas of low loading such as streets, parking areas, behind retaining walls, etc.

1 SACK: General trench backfill and backfill behind retaining walls where additional strength is required above that of 1/2 sack CLSM.

1-1/2 SACK: Structural backfill under foundations and as thermal fill and/or mechanical protection of duct banks and conduits.

2 SACK: General pipe bedding and encasement around vitrified clay pipe.

604.2 MATERIALS:

CLSM shall conform to the requirements of Section 728. Ready-mixed concrete shall not be used in lieu of CLSM without prior approval from the Engineer and shall be subject to rejection.

604.3 PLACEMENT:

The controlled low strength material shall be placed directly into the excavation. The CLSM shall be placed in a uniform manner that will prevent voids in or segregation of the material. Foreign material which falls into the trench prior to and during placing of the CLSM shall be immediately removed. The CLSM shall have consistency, workability, plasticity, flow characteristics and pumpability (when required) such that the material when placed is self-compacting. Mechanical compaction or vibration may be used to consolidate around structures, pipes, multiple conduits, etc., otherwise no mechanical compaction or vibration shall be required. The total elapsed time between the initial addition of water to the CLSM and the completed placement shall not exceed 90 minutes.

When CLSM is used for backfill around pipes or conduits, the CLSM shall be placed equally on both sides of pipe or conduit to prevent lateral displacement. Also, the CLSM shall be placed in lifts. The height of each lift shall not exceed the depth that will cause floating of the pipe or conduit. When placing the CLSM in greater lift depths, sufficient anchorage shall be provided so the pipe or conduit will not float.

Where CLSM is used for backfill around pipes or conduits with a depth less than 20 feet, the width of the excavation shown on the plans or in Section 601 may be reduced so that the minimum clear distance between the outside of the pipe or conduit and the side of the excavation (each side) shall be 12 inches for pipes or conduits 42 inches and larger, 6 inches for pipes or conduits between 4 inches and 42 inches and 3 inches for pipes or conduits 4 inches and smaller.

When CLSM is used behind retaining walls, the depth of each lift shall be limited so it will not induce hydraulic loads greater than the design loads.

For long trenches or installations which require a large amount of CLSM, bulkheads of wood, dirt, sand bags, etc. can be used to control the material's flowability. The bulkhead shall be removed prior to the continuation of the backfilling.

CLSM shall NOT be permitted to come in contact with any aluminum, copper or brass materials, e.g., aluminum pipes or culverts, copper water pipe, saddles, fittings, etc. Protection shall be any combination of the following: place a layer of noncorrosive material around the pipe e.g., native material, import material, etc. or provide a protective covering or wrapping such as polyethylene wrap per Section 610.6. Pipes smaller than 4 inches can be completely wrapped with tape as per Section 610.6 or approved equal.

Bricks shall be thoroughly moistened prior to placing, and shall be laid in full cement mortar beds. Every course may be a header course, but at least every fourth course shall be a header course. The horizontal cross-section of the manhole shall be circular unless otherwise called for on the plans or standard details. An oval or egg-shaped section will not be permitted. The brick manholes shall be mortared outside with ½ inch of cement mortar as shown. Inside of the brick wall shall be neatly pointed. The mortar coat shall be cured with a liquid membrane-forming compound conforming with Section 726 immediately after mortar has been placed and finished.

All machined surfaces on the frame and cover shall be such that the cover will lie flat in any position in the frame and have a uniform bearing through its entire circumference. Any frame and cover which creates any noise when passed over by automobiles shall be replaced. Frames shall be set firmly in a bed of mortar true to line and grade, all as shown on the plans and as called for in these specifications.

Backfilling shall be done in accordance with the requirements for trench backfilling as stated in Section 206.

625.3.2 Sanitary Sewer Drop Connections: Drop sewer connections shall be constructed in conformance with standard details.

Backfilling shall be done in accordance with the requirements for trench backfilling as stated in Section 206.

625.4 MEASUREMENT:

Each type of manhole installed, shall be measured as a complete unit, no distinction shall be made based on manhole depth.

625.5 PAYMENT:

Payment will be made at the contract unit price for each accepted manhole, and shall be compensation in full for furnishing and installing the manhole, complete in place, with formed or pre-cast inverts, concrete foundation, sanitary sewer drop connections sheeting and bracing, removal of obstructions cast iron frame and cover, excavation and backfill, paving cut replacement in excess of the applicable pay widths authorized in Section 336, and any incidentals thereto, in conformance with the plans and specifications.

- End of Section -

SECTION 630

TAPPING SLEEVES, VALVES AND VALVE BOXES ON WATER LINES

630.1 DESCRIPTION:

The installation of all tapping sleeves, valves and valve boxes shall conform to this specification and standard details, except as otherwise required on the plans or as modified in the special provisions.

630.2 GENERAL:

For valves 12-inches and smaller, the Contractor shall furnish the manufacturer's standard data and catalogues for gate valves, tapping valves, tapping sleeves, curb stop valves, butterfly valves and any castings.

For valves larger than 12-inches, the Contractor shall furnish shop drawings and technical data required for evaluating and approval of each type of valve, tapping sleeve and valve and butterfly valve. This information shall include complete details, dimensions, weights, diameter of stems, alloy for all valve parts, and any information that may be required to assemble, install, operate and maintain the valve.

The name of the manufacturer, the year of manufacture, the size of the valve, model number and rated working pressure, shall be cast on the body of each valve.

The Contracting Agency may test 10 percent of each type and size of valve furnished. Failure of any of the valves tested to meet these specifications shall be deemed sufficient cause to reject the entire lot delivered.

The internal working parts of valves of the same make, type, and size, shall be interchangeable.

630.3 GATE VALVES:

630.3.1 General: All valves shall conform to the latest revisions of AWWA standards supplemented as follows: Values shall be of the non-rising stem type and shall be counter-clockwise opening (left-hand).

The valve shall be furnished with either low zinc stems conforming to ASTM B98 or ASTM B763 or stainless steel SAE 304, 316, or 431 grade) conforming to either ASTM A276, ASTM A473, or ASTM A582.

Unless otherwise noted, valves shall have a 2-inch square operating nut.

All valves, 2-inch through 54-inch, shall have a working pressure of 250 psi and be in conformance with AWWA C-515 or AWWA C-509. Valves 2-inch through 16-inch shall also meet the requirements for a UL listing and Factory Mutual Standards 11.20 and 11.30 for gate valves.

Bronze for all interior parts of valves shall contain no more than 6 percent zinc if made from cast bronze, or must conform to Copper Development Association #67600 if made from bar stock material.

All interior and exterior ferrous surfaces exposed to fluid flow shall be epoxy coated to a minimum dry film thickness of 6 mils. Epoxy coatings shall be factory applied by an electrostatic or thermosetting process in accordance with the manufacturer’s printed instructions. The epoxy materials used shall be 100% powder epoxy or liquid epoxy that conforms to the requirements of AWWA C-550 and NSF/ANSI Standard 61.

Any epoxy coating that is chipped or damaged shall be repaired using the manufacturer’s recommended procedure and epoxy system.

Bypass valves are required only when specified. Bypass size shall be per manufacturer’s recommendation.

Valves in air release and vacuum relief lines shall be flanged or threaded as shown on the plans.

Valves in fire hydrant lines shall have a flanged joint end on the side towards the main and a restraint or mechanical joint end on the side towards the hydrant.

Gate valves 2-inch through 54-inch shall be resilient wedge style and may be furnished with flange ends, mechanical joint ends, or mechanical joint x flange end.

630.3.2: Specific Valve Size Requirements:

(A) Valves 2-inches through 20-inches:

Valves shall be iron body resilient wedge gate valves in accordance with the lastest revision of AWWA C-509 or AWWA C-515.

The valve shall be designed to work equally well with pressure on either side of the gate. The valve shall be equipped with o-ring packing.

Gearing and bypass not required unless specified.

(B) Valves 24-inches and larger:

Valves shall be resilient wedge gate valves in accordance with AWWA C-515.

Valves shall have spur gearing unless the bury is too shallow, in this case bevel gearing is acceptable.

Bypass valves are required only when specified.

630.4 TAPPING SLEEVES AND VALVES:

630.4.1 Tapping Valves: Tapping valves shall be identical in construction with the above specifications for gate valves. Tapping sleeves are considered an integral part of a tapping sleeve and valve assembly, with openings the same as the valve. Tapping valves shall have ends and seat rings of sufficient size to permit the use of full size cutters of either the Mueller or Smith type tapping machines. Tapping sleeve valves shall be flanged on one end to fit the tapping sleeve and a flange hub-end or mechanical joint on the other.

The tapping valve shall have the discs and seat ring so constructed that the inside diameter of the rings shall be at least 3/16 inch larger than the nominal size of the valve. The seat rings shall be bronze and shall have a minimum seating surface area equal to that of a standard gate valve, and the discs shall be proportionately larger to match.

Once the tap has been completed, the Contractor shall not operate the valve unless under direct supervision of the inspector.

TABLE 630-1	
BY-PASS VALVE SIZES	
Gate Valve Diameter in Inches	**By-Pass Valve Diameter in Inches**
16 to 20	3
24 to 30	4
36 to 42	6
48	8

630.4.2 Tapping sleeves for use on pipelines constructed of cast iron, ductile iron, asbestos cement, and PVC: Tapping sleeves shall be of extra heavy construction to provide resistance to line pressures. They shall be built in two halves for assembly around the main to be tapped. The branch outlet shall have a flanged face for bolting to the tapping valve.

Tapping sleeves shall be of the following types:

(A) Mechanical Joint Tapping Sleeves shall conform to the following:

The circumferential joints at both ends of the sleeve shall be sealed by mechanical joints and end gaskets. Mechanical joints shall conform to the requirements set forth in the most recent publication of AWWA C-111 as to the dimensions, clearance, and materials. Sleeve body shall be constructed of ASTM A283 Grade C, ASTM A285 Grade C, ASTM A-36 Steel or equal. The

body shall be coated with a corrosion resistant shop coat primer unless otherwise specified by the Utility Owner. A ¾" NPT test port is required on branch of sleeve for field testing prior to tap.

Flanged outlet shall have dimensions and drilling that complies with ASME B16.1 class 125 and per Manufacturer's Standardization Society (MSS SP-60).

Unless otherwise noted, approved elastomer compounds are SBR, Buna-N, EPDM, and Viton. Elastomer shall be compounded for use with water, salt solutions, mild acids and bases per ASTM D-2000.

Bolts to be corrosion resistant low alloy (AWWA C-111) unless otherwise specified by the Utility Owner.

Sleeve shall be compliant with the federal requirements of the Drinking Water Standard NSF/ANSI Standard 61 regulating the health effects of drinking water materials, treatment chemicals, and restricting the use of lead-containing materials.

Tapping sleeve shall be installed per the manufacturer's recommendations and Detail 340. Coupon extraction shall be available for inspection.

(B) Stainless Steel Tapping Sleeves shall conform to the following:

Stainless Steel, Type 304 ASTM A240, and meets or exceeds applicable AWWA C223 standards. Each weld is to be fully chemically passivated in accordance with ASTM A380. A ¾" NPT test port is required on branch of sleeve for field testing prior to tap.

Flanged outlets shall be Type 304 Stainless Steel ASTM A240, AWWA C228 Class SD ANSI 150# drilling and recessed for tapping valves per Manufacturer's Standardization Society (MSS-SP 60).

The gasket shall be fully circumferential providing a 360 degree seal. The elastomer compound shall be ¼" thick, have a grid patterned face, and certified to NSF/ANSI Standard 61-G & 372. Unless otherwise noted, approved elastomer compounds are SBR, Buna-N, EPDM, and Viton.

Elastomer shall be compounded for use with water, salt solutions, mild acids and bases per ASTM D-2000.

Bolts and Nuts shall be Type 304 Stainless Steel per ASTM A193 or ASTM A194.

Sleeve shall be compliant with the federal requirements of the Drinking Water Standard NSF/ANSI Standard 61 regulating the health effects of drinking water materials, treatment chemicals, and restricting the use of lead-containing materials.

Contractor to verify if size-on-size is acceptable to the Utility Owner.

Tapping sleeve shall be installed per the manufacturer's recommendations and Detail 340. Coupon extraction shall be available for inspection.

(C) Tapping Sleeve Testing shall comply with the following:

Unless otherwise noted, the tapping sleeve assembly shall be pressure tested utilizing a sanitized hydrostatic pump to 200 psi for a minimum of 30 minutes. The pressure test shall occur prior to tapping the main. A ¾" NPT test port is required on all sleeves for field testing prior to tap. Original manufacturer's test plug must be properly re-installed after testing is complete. All testing procedures shall comply with the NSF/ANSI Standard 60 and Standard 61 drinking water standard regulating the health effects of drinking water supplies, treatment chemicals, and restricting the use of lead-containing materials.

630.4.3 Tapping sleeves for concrete pressure pipes shall be fabricated tapping sleeves and comply with the following:

Except for meter service connections, taps shall be made by the Agency at prevailing rates or by approved Contractors when allowed or requested by the Contracting Agency. After installation of the tapping sleeve and valve, the Contractor shall provide an excavation sufficient in size to accommodate the tapping operation.

The Contractor shall pay the established shutdown charge to the Contracting Agency every time it is necessary to shut off valves and take a section of a water main out of services.

The above charges, as well as charges for tap connections to steel cylinder and reinforced concrete pipe, are subject to change, as established by the Contracting Agency.

630.5 BUTTERFLY VALVES:

(A) 16 inches and larger:

Valves shall be in accordance with AWWA C-504 latest revision as modified herein:

(1) Valve body shall be of cast iron or ductile iron with connecting ends one of or a combination of Flanged (Short Body), mechanical joint or ACP Hub End.

(2) Valves shall be Class 150-B unless otherwise specified.

(3) When requested the manufacturer shall furnish records of tests specified in AWWA C-504.

(4) Shaft seal may be O-ring seal, V-type packing or pull down packing.

(5) The valve disc may be either cast iron or ductile iron.

(6) Valves and operators shall be for direct burial installation.

(7) Valves to be furnished with manual operators and 2 inch square operating nut. Operator torque rating shall be calculated in accordance with AWWA C-504.

(8) Valves shall open when turning the operating nut counter-clockwise.

(9) Valves shall be installed with valve shaft in a horizontal position and the operating shaft vertical.

(10) All interior ferrous surfaces exposed to fluid flow shall be epoxy coated to a minimum dry film thickness of 6 mils. Epoxy coatings shall be factory applied by an electrostatic or thermosetting process in accordance with the manufacturer's printed instructions. The epoxy materials used shall be 100% powder epoxy or liquid epoxy that conforms to the requirements of AWWA C-550, and to the prevailing requirements of the Food and Drug Administration and of the Environmental Protection Agency.

(11) All exterior ferrous surfaces, except finished or bearing surfaces, shall be factory coated with two coats of asphaltic varnish conforming to Federal Specification TT-V-51c, or shall be epoxy coated as required above for interior surfaces.

(12) A manufacturer's affidavit of compliance shall be furnished.

(13) Shop drawings shall be furnished.

(B) 3 inches through 12 inches:

This specification generally describes valves and operator assemblies designed for underground service, as manufactured by Dresser Industries, B-I-F Industries Incorporated, Henry Pratt Company, Allis Chalmers Manufacturing Company, or approved equal.

Where material or equipment is designated on the plans or in this specification by a trade or manufacturer's name, it is so designated primarily to establish standards of quality, finish, appearance and performance.

All specific requirements of this specification must be adhered to, and all necessary modifications shall be made in the article specified by the trade name, type or model or manufacturer's equipment to make it conform to all specific requirements of this specification.

The valves shall be in accordance with AWWA C-504, Class 150-B, except as modified herein:

(1) Valve ends may be the thin type or wafer type to be installed between flanges drilled in conformance with ASA B 16.1-125 or may be flanged both ends or the valves may have bell ends with rubber gaskets, for cast iron pipe or asbestos cement pipe conforming to the kind of pipe being used.

(2) Valves shall be designed for buried service with the valve shaft in a horizontal position and the operating shaft vertical.

(3) Valves shall be left-hand opening, counter-clockwise unless shown otherwise on the plans.

(4) Discs shall be Ni-Resist, ASTM A436, Type 1, or cast iron, ASTM A48, Class 40, in accordance with the following variations:

(a) Cast iron disc may be used providing the rubber seat ring is contained on the disc with the rubber ring closing against a Type 304 stainless steel ring or a bronze ring contained in the body of the valve.

(b) Ni-Resist disc may be used where rubber seat is contained in the valve body.

(c) Valves with rubber seats in the valve body may have cast iron discs with a Type 304 stainless steel or bronze edge seating surface retained on the edge of the disc.

Shafts and disc shaft fasteners shall be constructed of Type 304, stainless steel, unless the shaft is completely sealed from the line fluid. Valve shafts completely sealed from the line fluid may be of high strength steel with all other metal parts in contact with the line fluid to be Type 304 stainless steel.

Valves with rubber seat mounted in the body shall have the rubber either bonded or mechanically retained in its final position. Rubber seats which are on the disc edge shall be retained by a clamping ring and screws. Clamping ring and screws shall be made of 18-8 stainless steel, Type 304, or bronze conforming to ASTM B61 or ASTM B584.

Manual operators shall have AWWA 2 inch square operating nuts and shall require at least 2 turns per inch diameter to rotate the disc 90 degrees. Operators must accept a minimum of 300 ft. lbs. input torque on stops at ends of travel without damage to valve or operator. The operator torque rating shall equal, or exceed, the valves shown in Table I of AWWA C-504 for valve class specified above.

All interior ferrous surfaces exposed to fluid flow shall be epoxy coated to a minimum dry film thickness of 6 mils.

Epoxy coatings shall be factory applied by an electrostatic or thermosetting process in accordance with the manufacturer's printed instructions.

The epoxy materials used shall be 100% powder epoxy or liquid epoxy that conforms to the requirements AWWA C-550-81, and to the prevailing requirements of the Food and Drug Administration and of the Environmental Protection Agency.

All exterior ferrous surfaces, except finished or bearing surfaces, shall be factory coated with 2 coats of asphaltic varnish conforming to Federal Specification TT-V-51c, or shall be epoxy coated as required above for interior surfaces.

630.6 AIR RELEASE AND VACUUM VALVES

Valve assemblies shall be furnished and installed where shown and as detailed on the drawings.

(A) Air release on water mains shall be controlled by the use of an air release valve assembly, of size and type as shown on the plans. Air release valves shall be of the flanged or screwed type as designated on the Agency’s approved products list or in the special provisions.

(B) Vacuum and air relief, when called for on the plans, shall be controlled by a vacuum relief valve on the air release valve noted above. The valves shall be of the same manufacture or may be a combination air and vacuum valve assembly designated on the Agency’s approved products list or in the special provisions.

630.7 CONSTRUCTION METHODS:

All valves, their supports, manholes, vaults, and valve boxes shall be installed in accordance with Section 610.

Valves 16 inches and larger, before being shipped from the factory, shall have the flanged ends completely covered with plywood. Plywood shall be left on the valve until just before installation in the line.

630.8 MEASUREMENT:

Measurement will be by the unit each of the various kinds and sizes of valves, manholes, vaults, or tapping sleeves and valves, including valve boxes and covers.

630.9 PAYMENT:

Payment will be made at the contract unit price and shall be compensation in full for the complete installation in place including all labor, materials, equipment, and all incidentals necessary to complete the installation. The compensation will also include the cost of necessary pavement replacement in excess of the pay widths allowed in Section 336 for pavement replacement over pipe trenches.

- End of Section -

This Page is For Future Use

PART 700

MATERIALS

Section	Last Revised	Title	Page
701	2013	Aggregate	701-1
702	2013	Base Materials	702-1
703	2012	Riprap	703-1
705	2012	Portland Cement Treated Base	705-1
708	2011	Asphalt Pavement Core Bonding Materials	708-1
710	2017	Asphalt Concrete	710-1
711	2014	Paving Asphalt	711-1
712	1999	Liquid Asphalt	712-1
713	2012	Emulsified Asphalts Materials	713-1
714	2012	Microsurfacing Materials	714-1
715	2012	Slurry Seal Materials	715-1
716	2012	Cover Material	716-1
717	2017	Asphalt-Rubber Asphalt Concrete	717-1
718	2016	Preservative Seal for Asphalt Concrete	718-1
719	2017	Polymer Modified Asphalt Concrete	719-1
723	2018	Placement of Pervious Concrete	723-1
725	2018	Portland Cement Concrete	725-1
726	2018	Concrete Curing Materials	726-1
727	2017	Steel Reinforcement	727-1
728	2018	Controlled Low Strength Material	728-1
729	2018	Expansion Joint Filler	729-1
735	2016	Reinforced Concrete Pipe	735-1
736	2012	Non-reinforced Concrete Pipe	736-1
738	2012	High Density Polyethylene Pipe and Fittings for Storm Drain and Sanitary Sewer	738-1
739	2015	Steel Reinforced Polyethylene Pipe & Fittings for Storm Drain, Irrigation & Sanitary Sewer	739-1
740	2014	Polypropylene Pipe & Fittings for Storm Drain, Irrigation & Sanitary Sewer	740-1
741	2011	Lining for Reinforced Concrete Sanitary Sewer Pipe	741-1
742	2015	Precast Manhole	742-1
743	1998	Vitrified Clay Pipe	743-1
745	1998	PVC Sewer Pipe and Fittings	745-1
750	2015	Iron Water Pipe and Fittings	750-1
752	1998	Asbestos-Cement Water Pipe and Fittings	752-1
753	2000	Galvanized Pipe and Fittings	753-1
754	2012	Copper Pipe, Tubing and Fittings	754-1

Section	Last Revised	Title	Page
755	2012	Polyethylene Pipe for Water Distribution	755-1
756	2008	Dry Barrel/Fire Hydrants	756-1
757	1998	Sprinkler Irrigation System	757-1
758	2005	Concrete Pressure Pipe - Steel Cylinder Type	758-1
759	2002	Steel Pipe	759-1
760	1998	Coating Corrugated Metal Pipe and Arches	760-1
761	1998	Structural Plate Pipe, Arches, and Pipe Arches	761-1
770	2013	Structural and Rivet Steel, Rivets, Bolts, Pins, and Anchor Bolts	770-1
771	2016	Galvanizing	771-1
772	2017	Chain Link Fence	772-1
775	2015	Brick and Concrete Masonry Units (Blocks)	775-1
776	2012	Masonry Mortar and Grout	776-1
778	1998	Lumber	778-1
779	1998	Wood Preservatives	779-1
787	1999	Gray Iron Castings	787-1
790	1999	Paint	790-1
792	2010	Dust Palliative	792-1
795	2014	Landscape Material	795-1
796	2017	Geosynthetics	796-1

TABLE 719-3		
MARSHALL MIX DESIGN CRITERIA		
Criteria	Requirements 1/2" Mix	Designated Test Method
1. Binder Content, Minimum	6.1%	---
2. Voids in Mineral Aggregate: %, min	14	AI MS-2
3. Effective Voids: %, Range	4.0±0.2	AI MS-2
4. Absorbed asphalt: %, Range*	0-1.0	AI MS-2
5. Dust to Eff. Asphalt Ratio, Range **	0.6-1.4	AI MS-2
6. Tensile Strength Ratio: % Min.	65	ASTM D4867
7. Dry Tensile Strength: psi, Min.	100	ASTM D4867
8. Stability: pounds, Minimum	2,500	ASTM D6926
9. Flow: 0.01-inch, Range, Minimum	8	ASTM D6927
10. Mineral Aggregate Grading	---	AASHTO T-27 & T11

* Unless otherwise approved by the Engineer.

** The ratio of the mix design composite gradation target for the No. 200 sieve, including admixture, to the effective asphalt content shall be within the indicated range

- End of Section -

SECTION 723

PERVIOUS CONCRETE

723.1 GENERAL:

Pervious concrete describes a near-zero-slump, open graded material with sufficient continuous voids to allow water to pass from the surface to underlying layers. The void content will generally range from 15 to 35% and the drainage rate will vary with aggregate size and density of the mixture. Placement of pervious concrete is described in Section 323.

723.2 MATERIALS:

All materials used in the production of pervious concrete shall meet the appropriate requirements of Section 725. Hydration stabilizing and viscosity-modifying admixtures (VMA), if used, shall meet the requirements of ASTM C494.

723.3 MIX DESIGN:

A mix design shall be submitted to the Engineer for approval in accordance with Section 725.6. The minimum cementitious material content shall be 540 pounds per cubic yard. The design shall also show the percent voids, and the intended type of construction. The percent voids shall be tested in accordance with ASTM C1688.

723.4 MIXING:

Pervious concrete mixing shall comply with Section 725.7. Mixing shall continue until the cementitious material and water are thoroughly dispersed throughout the material.

End of Section -

SECTION 725

PORTLAND CEMENT CONCRETE

725.1 GENERAL:

Portland cement concrete shall be composed of cementitious materials, fine and coarse aggregates, water, and, if specified or allowed, certain chemical admixtures and additives.

TABLE 725-1		
CONCRETE CLASSES - MINIMUM REQUIREMENTS		
Class of Concrete	Minimum Cementitious Materials Content (lbs. per cubic yard)	Minimum Compressive Strength * at 28 Days (psi)
AA	600	4000
A	520	3000
B	470	2500
C	420	2000
* In accordance with Section 725.8		

725.2 CEMENTITIOUS MATERIALS:

Cementitious materials to be used or furnished under this specification shall be:

Portland cement, meeting the requirements of ASTM C150
Type II, low alkali, when no other specific type is specified
Type III, low alkali, for high early strength, when applicable or specified
Type V, low alkali, when specified in the special provisions for applications requiring high sulfate resistance

Portland Pozzolan Cement ASTM C595
Type IP (MS), when no other specific type is specified

Supplementary Cementitious Materials (SCM) shall not be used as an additional cementitious materials replacement in concrete in combination with Portland Pozzolan Cement.

Cementitious materials shall be sampled and tested as prescribed in the applicable ASTM specifications. Upon request, the Contractor shall obtain and deliver to the Engineer a Certification of Analysis or Certificate of Compliance conforming to the requirmenets of Section 106.2 signed by the material manufacturer, identifying the cementitious material and stating that the cementitious material delivered to the batching site has been tested in accordance with the cited specifications and complies with the cited specifications. The cost of furnishing tested cementitious materials shall be considered as included in the contract price and no additional allowance will be made therefore.

When suitable facilities, as recommended by the Concrete Plant Manufacturer's Bureau, and approved by the Engineer, are available for handling and weighing bulk cementitious materials, such facilities shall be used. Otherwise the cementitious material shall be delivered in original unopened sacks that bear the name or brand of the manufacturer. The type of cementitious material, and the weight contained in each sack shall be plainly marked thereon.

Cementitious materials shall be stored in such manner as to permit ready access for the purpose of inspection and identification, and so as to be suitably protected against damage by contamination or moisture. Should any lot of bulk cementitious material be delivered to the site show evidence of contamination, the Engineer may require that such lot be removed from the site.

725.2.1 Supplementary Cementitious Materials (Pozzolans): Supplementary Cementitious Materials to be used in concrete or furnished under this specification shall conform to the appropriate ASTM requirements as follows:

Fly ash or natural pozzolan	ASTM C618 and C311
Silica Fume	ASTM C1240

Up to 25 percent by weight of the Table 725-1 minimum cementitious materials requirements may be an approved fly ash or natural pozzolan. Additional pozzolanic material in excess of the minimum Table 725-1 requirements may be incorporated into a concrete mix design to achieve enhanced performance, upon approval of the Engineer.

Upon request, the Contractor shall obtain and deliver to the Engineer a Certification of Analysis or Certification of Compliance signed by the pozzolan supplier identifying the pozzolanic material and stating the pozzolan delivered to the batching site complies with the appropriate specifications. The cost of furnishing tested pozzolan shall be considered as included in the contract price and no additional allowance will be made therefore.

Pozzolanic materials shall be handled and stored in the same manner as other cementitious materials. When facilities for handling a bulk pozzolan are not available, the pozzolan shall be delivered in original unopened sacks bearing the name and brand of the supplier, the type and source of the pozzolan, and the weight contained in each sack plainly marked thereon.

725.3 AGGREGATES:

Coarse and fine aggregate shall conform to the applicable requirements of ASTM C33. Coarse aggregate grading requirements shall conform to the appropriate rock size designation in the Grading Requirements for Coarse Aggregate, Table 2. Fine aggregate grading requirements shall conform to the Fine Aggregate Grading section.

The average value of 3 successive sand equivalent samples shall not be less than 70 when tested in accordance with ASTM D2419. No individual sample shall have a sand equivalent less than 65.

The loss by abrasion in the Los Angeles Abrasion Machine, determined as prescribed in ASTM C131, shall not exceed 10 percent, by weight, after 100 revolutions nor 40 percent after 500 revolutions.

Prior to the delivery of the aggregates and whenever required during concrete production, the Contractor shall make stockpiles available to the Engineer for testing. All required samples shall be furnished at the expense of the Contractor, and the cost of sampling and testing shall be at the expense of the Contracting Agency.

Reclaimed Concrete Materials (RCM) and Reclaimed Asphalt Pavement (RAP) as defined in Section 701 shall not be used in Portland Cement Concrete without the prior approval of the Engineer.

725.4 WATER:

The water used for mixing concrete shall be potable or shall meet the requirements of ASTM C1602, when tested by a qualified independent testing laboratory.

725.5 ADMIXTURES AND ADDITIVES:

Admixtures or additives of any type, except as otherwise specified, shall not be used unless identified in the approved mix design or authorized by the Engineer.

Water reducing admixtures incorporated into the approved concrete mix design shall meet the requirements of ASTM C494 for the appropriate type.

Air entraining admixtures incorporated into the approved concrete mix design shall meet the requirements of ASTM C260.

Pigments incorporated into the approved concrete mix design for integrally colored concrete shall meet the requirements of ASTM C979.

Fibers incorporated into the approved concrete mix shall meet the requirements of ASTM C1116.

Any admixtures used shall be included in the price for that item.

725.6 MIX DESIGN PROPORTIONING:

A concrete mix design carrying the producer's designated mix number for each type of concrete being furnished under these

specifications shall be submitted to the Engineer at least once each year for approval. Each design shall utilize the proper proportioning of ingredients to produce a concrete mix that is homogeneous and sufficiently workable to provide a consistent and durable concrete product that meets the specified compressive strength and other properties as required by the application.

A concrete mix design submittal shall include the mix identification number and the applicable proportions, weights, and quantities of individual materials incorporated into the mix including the size and souce of concrete aggregates, the type and source of cement and fly ash or SCM, and the brand and designation of chemical admixtures or other additives.

In the event there is a modification to the mix design proportions:

(A) Modifications that do not require a new mix design submittal/approval:

(1) Modifications which do not result in batch target weights for the fine aggregate or combined coarse aggregates changing by more than 5 percent from the original approved mix design.
(2) Modifications to the percentage of coarse aggregate fractions that do not change the total coarse aggregate volume.
(3) Modifications to dosages of chemical or air-entraining admixtures, within the manufacturer's recommendations.
(4) The incorporation or elimination of chemical admixtures which are listed on the mix design to effect a change in the time-of-set (retarders or accelerators).

(B) Modifications that require a new mix design submittal/approval and may require performance verification:

(1) Modification to the class of concrete per Table 725-1.
(2) Modification to the type/class/source of cement, fly ash, natural pozzolan, or silica fume.
(3) Modification to the percentage of fly ash, natural pozzolan, or silica fume.
(4) Modification to a coarse aggregate size designation.
(5) Modification of the type of chemical admixture, or the incorporation or elimination, of an air-entraining admixture.
(6) Modification of coarse or fine aggregate source.

725.7 MIXING:

All proportioning/batching/mixing equipment shall comply with the standards of the Concrete Plant Manufacturer's Bureau and the certification requirements of the Arizona Rock Products Association or National Ready Mixed Concrete Association. The proportioning shall consist of combining the specified sizes of aggregates with cementitious materials, admixtures/additives, and water as herein provided. No method which may cause the segregation or degradation of materials shall be used.

Weighing and metering devices used for the purpose of proportioning materials shall fulfill requirements as to accuracy and tolerance prescribed by the Weights and Measures Division of the State of Arizona and shall be sealed and certified in accordance with the procedures established by this agency. This certification shall not be over 12 months old and shall be renewed whenever required by the Engineer. When portable plants are set up at a new or temporary location, the scales and scale assembly shall be inspected and certificate issued regardless of the date when the scales were last tested. The Engineer may require the Contractor to run a quick scale check at any time with certified weights furnished by the Contractor and order the scale recertified if necessary.

Any admixture/additive shall be measured accurately by mechanical means into each batch by equipment or in a method pre-approved by the Engineer.

The equipment for measuring and supplying the water in the mixer shall be so constructed and arranged that the amount of water to be added to the mixture can be measured, in gallons or by weight. The amount of water shall be varied in accordance with the percentage of free moisture in the material and the requirements of the workability of the aggregate.

Machine mixing will be required in all cases unless pre-approved by the Engineer. Regardless of the method employed, mixing shall be commenced as soon as possible after the cementitious material is placed in contact with the aggregates or water. All concrete mixers shall be of such design and construction, and so operated, as to provide a thoroughly and properly mixed concrete in which the ingredients are uniformly distributed.

725.7.1 Paving and Stationary Mixers: Paving and stationary mixers shall comply with the standards of the Concrete Plant Manufacturer's Bureau and the certification requirements of the Arizona Rock Products Association or the National Ready Mixed Concrete Association.

Mixers shall be maintained in proper and serviceable working condition, and any part or portion thereof that is out of order, or becomes worn to such extent as to detrimentally affect the quality of mixing, shall be promptly repaired or replaced.

The proper proportions of aggregate, cementitious materials, admixtures/additives and water for each batch of concrete shall be placed in the mixer, and shall be mixed for a period of not less than 50 seconds after all such materials are in the drum.

The rotating speed at which the mixer shall be operated shall conform to that recommended by the manufacturer.

The total volume of materials mixed in any one batch shall neither exceed the water level capacity of the mixer nor the manufacturer's catalog rated capacity of the mixer.

725.7.2 Transit Mixers: Transit mixers shall meet the requirements of the Truck Mixer Manufacturer's Bureau and the certification requirements of the Arizona Rock Products Association or the National Ready Mixed Concrete Association. Ready mix concrete and shall comply with ASTM C94 except as herein specified.

Each mixer and agitator shall have attached thereto in a prominent place a metal plate or plates, installed by the manufacturer, on which is plainly marked the capacity of the drum in terms of the volume of mixed concrete and the speed of rotation for the agitating and mixing speeds of the mixing drum or blades.

Each mixer shall have an identification number painted on the truck in such a location that it can be easily read from the batching platform.

The total volume of materials introduced into the mixer for mixing purposes shall not exceed the manufacturer's guaranteed mixing capacity. If the concrete so mixed does not meet the uniformity requirements of this section, the amount of materials charged into the mixer shall be reduced.

The rotation speed at which the mixer shall be operated shall conform to that recommended by the manufacturer.

Each batch of concrete placed in the mixer shall be mixed for not less than 70 nor more than 100 revolutions of the drum or blades, at the speed designated by the manufacturer of the equipment as mixing speed. Additional mixing shall be at the agitating speed designated by the manufacturer of the equipment. The revolving of the drum shall be continuous until the concrete is completely emptied from the drum. Before any portion of the materials for any batch of concrete is placed therein, the drum of the mixer shall be completely emptied of the previously mixed batch.

At the time of delivery to the job site, the Engineer shall be provided with a legible delivery ticket which shall contain the following information:

Date and Truck Number.

Name of the Supplier.

Name of the Contractor.

Specific designation of job (name and location).

Number of cubic yards in the batch.

Time the transit mixer is loaded.

725.9 ACCEPTANCE:

(A) **Plastic Concrete Properties**

(1) The slump of the concrete shall meet the requirements of ASTM C94 Tolerances in Slump section. When the approved mix design or project specification requirements for slump are a "maximum" or "not to exceed", the following tolerances apply:

Specified slump:	If 3" or less	If more than 3"
Plus tolerance	0 inch	0 inch
Minus tolerance	1 1/2 inch	2 1/2 inch

When the approved mix design or project specification requirements for slump are not written as a "maximum" or "not to exceed," the following tolerances apply:

For design slump of:	Tolerance
2 inch and less	+/- 1/2 inch
More than 2 through 4 inch	+/- 1 inch
More than 4 inch	+/- 1 1/2 inch

(2) Limit the maximum allowable temperature of the concrete mixture immediately before placement to 90 degrees F unless otherwise specified or unless a higher allowable temperature is pre-approved by the Engineer. At the discretion of the Engineer, recommended practices in ACI 305, Specification for Hot Weather Concreting, can provide good reference information and may be used to modify maximum allowable concrete temperature and acceptance.

Per ACI 306, Specification for Cold Weather Concreting, when the atmospheric temperature at the time of placing concrete is above 30°F the temperature of the concrete, as placed, shall not be less than 60°F. When the atmospheric temperature at the time of placing concrete is between 0°F and 30°F the temperature of the concrete, as placed, shall not be less than 65°F.

(3) Air entrained concrete shall meet the requirements of ASTM C94 Air-Entrained Concrete section. The air content of air-entrained concrete when sampled from the transportation unit at the point of discharge shall be within the approved mix design tolerance or +/- 1.5 % of the specified value. When a representative sample taken prior to discharge shows an air content below the specified level by more than the allowable tolerance, additional air entraining admixture shall be added to the concrete mix to achieve the desired air content level, followed by a minimum of 30 revolutions at mixing speed.

(4) Per ASTM C94 Mixing and Delivery section, discharge of the concrete shall be completed within 1 1/2 hour after the introduction of the mixing water to the cementitious materials or the introduction of the cementitious materials to the aggregates. The Engineer may allow the continuation of concrete placement after the 1 1/2 hour time limit has been reached if the concrete is of such slump or workability that it can be placed without the addition of water to the batch.

Any concrete failing to meet the tolerances for plastic concrete properties in 725.9 (A) (1) through (4) shall be reviewed by the Engineer and is subject to rejection.

(B) **Hardened Concrete Properties – Compressive Strength**

Compressive strength of concrete shall be determined on the basis of cylinder strength tests obtained in accordance with section 725.8.2 and shall be acceptable if the tests meet or exceed the minimum specified strength. When the validity of cylinder strength tests are suspect, the strength of concrete in question shall be determined in accordance with Section 725.8.3.

When compressive strength test results are less than the specified minimum, an Engineering Analysis to determine the impact of the strength reduction may be required by the Engineer prior to the decision to accept or reject the concrete. The Engineering Analysis will be at the Contractor's expense. Any concrete that is rejected by the Engineer shall be removed and replaced by the Contractor at the Contractor's expense.
When concrete is accepted by the Engineer on the basis of test results of less than 100% of the required minimum compressive strength, an adjustment in the concrete unit price may be made for the quantity of concrete represented by such strength tests in accordance with Table 725-2.

TABLE 725-2			
Adjustment in Concrete Unit Price Based on Strength Deficiency			
Class AA and Class A		Class B and Class C	
Percent of Specified Minimum 28-day Compressive Strength Attained (Nearest 1%)	Percent of Concrete Unit Price Allowed	Percent of Specified Minimum 28-day Compressive Strength Attained (Nearest 1%)	Percent of Concrete Unit Price Allowed
100 % or greater	100	100 % or greater	100
98-99	90	95-99	95
96-97	85	90-94	90
95	80	85-89	85

- ***End of Section*** -

SECTION 726

CONCRETE CURING MATERIALS

726.1 GENERAL:

Curing materials shall consist of curing paper, polyethylene film or liquid membrane-forming compounds which, when applied to fresh concrete, will inhibit moisture loss and reduce temperature rise during the curing period. All curing materials and methods shall be approved by the Engineer prior to use. Wet coverings such as burlap, cotton mats, or other moisture-retaining fabrics also may be used, or may be required by special provisions.

726.2 MATERIALS:

(A) Curing paper, or polyethylene film, shall conform ASTM C171.

(B) Liquid membrane-forming compounds shall conform ASTM C309. Type 1 compound with either a Class A or Class B vehicle shall be used for concrete structures, except bridge decks, approach slabs, and portland cement concrete pavement. Type 2 white pigmented compound, with either a Class A or Class B vehicle shall be used for portland cement concrete pavement, bridge decks and approach slabs.

(C) Burlap cloth made from jute or kenaf shall conform to AASHTO M-182.

- End of Section -

SECTION 727

STEEL REINFORCEMENT

727.1 GENERAL:

The following specifications set forth the requirements for bar reinforcement, wire reinforcement, and wire mesh reinforcement. The reinforcement shall conform accurately to the dimensions and details indicated on the plans or otherwise prescribed and before being placed in any concrete work, shall be thoroughly cleaned of all loose rust, mill scale, mortar, oil, dirt, or coating of any character, which would be likely to destroy, reduce, or impair its proper binding with the concrete.

No reinforcing steel will be accepted under this specification until it has been approved by the Engineer. When required by the Engineer, the Contractor or supplier shall furnish a spot sample taken on the project and notify the Engineer as to when and where they will be available. Such samples shall be furnished at the expense of the Contractor or supplier, but the cost of any testing that may be required will be borne by the Contracting Agency. Samples shall only be taken in the presence of the Engineer. The Contractor shall furnish 3 certified mill test reports or a Certificate of Compliance for each heat or size of steel which can be clearly identified with the lot. When such information has been furnished, placing of the steel will not be held up until results of spot samples have been received. Unless otherwise specified, all reinforcing steel bars shall be deformed intermediate grade 40 billet steel in conformance to ASTM A615.

In testing bar reinforcement, only the theoretical cross-sectional area will be used in all computations.

Reinforcing steel shall be furnished in the sizes, shapes, and lengths shown on the plans. Bending of steel shall conform to the requirements of Section 505.5.2.

The various grades of steel shall not be used interchangeably in structures.

727.2 WIRE REINFORCEMENT:

Wire reinforcement shall in all respects fulfill requirements prescribed in ASTM A1064.

727.3 WELDED WIRE REINFORCEMENT:

Welded wire reinforcement shall conform to ASTM A1064. The wire size number and the wire spacing will be specified in the special provisions or shown on the plans. The welded wire reinforcement shall be so constructed as to retain its original shape and form during necessary handling. The effective cross-sectional area of the metal shall be equal to that specified or indicated on the plans.

727.4 WIRE TIES:

Wire for ties shall be black, annealed, not lighter than 16 gage.

- End of Section -

SECTION 728

CONTROLLED LOW STRENGTH MATERIAL

728.1 GENERAL:

Controlled Low Strength Material (CLSM) is a mixture of cementitious materials, aggregates, admixtures\additives, and water that, as the cementitious materials hydrate, forms a soil replacement. CLSM is a self-compacting, flowable, cementitious material primarily used as a backfill, structural fill, or a replacement for compacted fill or unsuitable native material. Placement and usage of each type of CLSM is described in Section 604.

728.2 MATERIALS:

Cementitious materials shall conform to Section 725.2.

Coarse aggregate shall conform to ASTM C33 grading size No. 57. The size and gradation of fine aggregates (sand) shall conform to ASTM C33. Alternate materials meeting the applicable requirements of Section 701 or 702 such as combinations of other aggregates, Aggregate Base Course (ABC) or Reclaimed Concrete Material (RCM) may be used to replace the required coarse and fine aggregate as long as the approved mix design meets the requirements of Table 728-1 and is approved by the Engineer.

Water shall conform to Section 725.4

728.3 PROPORTIONING OF MIXTURES AND PRODUCTION TOLERANCES:

Proportioning of the mixture shall comply with Section 725.6 and Table 728-1. The CLSM shall have consistency, workability, plasticity, and flow characteristics such that the material when placed is self-compacting. A minimum of 40% coarse aggregate shall be used. A mix design shall be submitted for the Engineer's approval prior to the excavation for which the material is intended for use. Sampling shall be in accordance with ASTM D5971. The flow consistency shall be tested in accordance with ASTM D6103-04. Unit weight (when applicable) shall be obtained by ASTM D6023. Compressive strength shall be tested in accordance with ASTM D4832.

TABLE 728-1

CONTROLLED LOW STRENGTH MATERIAL REQUIREMENTS

Portland Cement Content, Sack/cu yd	Flow, inches
1/2 Sack	9±2
1 Sack	9±2
1 1/2 Sack	9±2
2 Sack	9±2

Notes for Table 728-1:
(1) CLSM mixes meeting the table requirements will not generally be placeable by means of a concrete pump or may not provide the needed workability for certain conditions. When pumpable mixes or increased workability are required, the addition of fly ash or a natural pozzolan in excess of the required Portland Cement Content may be used.
(2) Ready-mixed structural concrete or grout shall not be used in lieu of CLSM without prior approval from the Engineer and shall be subject to rejection.

728.4 MIXING:

CLSM mixing shall comply with Section 725.7 Mixing shall continue until the cementitious material and water are thoroughly dispersed throughout the material. Mixes shall be homogenous, readily placeable and uniformly workable.

End of Section -

SECTION 729

EXPANSION JOINT FILLER

729.1 PREMOLDED JOINT FILLER:

Expansion joint filler materials shall consist of preformed strips of a durable resilient compound and comply with ASTM D1751, D1752, or D2628, as specified by the Contracting Agency or as approved by the Engineer.

729.2 POUR TYPE JOINT FILLERS FOR PORTLAND CEMENT CONCRETE PAVING (PCCP):

Pour type joint fillers shall comply with ASTM D3406 or as approved by the Engineer. Joint sealant shall not contain any coal tar materials. The following requirement shall be added to paragraphs 7.1 of ASTM D3406:

The minimum ambient temperature during application and ambient temperatures under various storage conditions shall be clearly marked on the container.

729.3 TEST REPORT AND SHIPMENT CERTIFICATE:

When requested by the Engineer, each shipment shall be accompanied by a Certificate of Compliance that the material complies with the above specifications.

- End of Section -

UNIFORM STANDARD DETAILS for PUBLIC WORKS CONSTRUCTION

SPONSORED and DISTRIBUTED by the

MARICOPA ASSOCIATION of GOVERNMENTS

2018 REVISION TO THE 2015 EDITION

ARIZONA

100 SERIES: GENERAL INFORMATION

Detail	Revised	Title
101	2011	GENERAL INFORMATION
110-1	2011	PLAN SYMBOLS (SYMBOLS)
110-2	2011	PLAN SYMBOLS (LINE TYPES)
112	1998	DIMENSIONING FOR ROAD IMPROVEMENT PLANS
120	2015	SURVEY MARKER
122	2011	PAVEMENT MARKER FOR FIRE HYDRANTS
130	2003	BARRICADES
131	1998	STREET SIGN BASE
140	2009	BOLLARD
141	2009	HAZARD MARKER
145	2016	SAFETY RAIL
150	1998	PRECAST SAFETY CURB
160	2013	6' CHAIN LINK FENCE AND GATE

200 SERIES: STREET INFORMATION

Detail	Revised	Title
200-1	2016	TRENCH BACKFILL AND SURFACE REPLACEMENT
200-2	2016	TRENCH BACKFILL AND SURFACE REPLACEMENT
201	2014	ASPHALT PAVEMENT EDGE DETAILS
202	1998	ALLEY DETAILS (PAVED AND UNPAVED)
203	1998	SCUPPERS
204	1998	EQUIPMENT CROSSING
205	2006	PAVED TURNOUTS
206-1	2018*	CONCRETE SCUPPER
206-2	2007	CONCRETE SCUPPER
206-3	2007	CONCRETE SCUPPER (ISOMETRIC VIEW)
210	2012	RESIDENTIAL SPEED HUMP
211	1998	STANDARD TRENCH PLATING DETAIL
212	2015	UTILITY POTHOLE REPAIR
220-1	2007	CURB AND GUTTER TYPES A, B, C AND D
220-2	2007	CURB AND GUTTER TYPES E AND F
221	2018*	CURB AND GUTTER TRANSITION AND INTEGRAL ROLL CURB, GUTTER AND SIDEWALK
222	2008	SINGLE CURB - TYPES A, B AND TERMINATION
223	1998	MEDIAN NOSE TRANSITION
224	1998	JOINT FOR DRAINAGE INLETS AND MANHOLE COVERS
225	2016	CONCRETE PAVERS
230	2014	SIDEWALKS
234	2012	CURB MODIFICATION AT DETECTABLE WARNING
236-1	2018*	25'-35' R - RADIAL CURB RAMP - ATTACHED SIDEWALK
236-2	2018*	25'-35' R - RADIAL CURB RAMP - DETACHED SIDEWALK
236-3	2018*	20' R - RADIAL CURB RAMP - ATTACHED SIDEWALK
236-4	2018*	25'-35' R - RADIAL COMBINATION CURB RAMP
236-5	2018*	25'-35' R - RADIAL PARALLEL CURB RAMP
237-1	2018*	25'-35' R - DIRECTIONAL CURB RAMP - ATTACHED SIDEWALK
237-2	2018*	25'-35' R - DIRECTIONAL CURB RAMP - DETACHED SIDEWALK
237-3	2018*	20' R - DIRECTIONAL CURB RAMP - ATTACHED SIDEWALK

200 SERIES: STREET INFORMATION (CONTINUED)

Detail	Revised	Title
238-1	2018*	PERPENDICULAR CURB RAMP
238-2	2018*	COMBINATION CURB RAMP
238-3	2018*	PARALLEL CURB RAMP
240	2010	VALLEY GUTTER
250-1	2014	DRIVEWAY ENTRANCES WITH DETACHED SIDEWALK
250-2	2013	DRIVEWAY ENTRANCES WITH SIDEWALK ATTACHED TO CURB
251	2017	RETURN TYPE DRIVEWAYS
252	2005	BUS BAYS
260	2018*	RETROFIT DRIVEWAY OR ALLEY ENTRANCE (WITH 2" ROLL CURB AND GUTTER)
262	2012	WING TYPE ALLEY ENTRANCE (W/ COMBINED CURB & GUTTER)
263	2002	WING TYPE ALLEY ENTRANCE (W/ ROLL TYPE CURB & GUTTER)
270	2017	ROUND FRAME AND COVER (AND GRADE ADJUSTMENTS)
271	2017	SQUARE FRAME AND COVER (AND GRADE ADJUSTMENTS)

300 SERIES: WATER INFORMATION

Detail	Revised	Title
301	1998	BLOCKING FOR WATER GATE AND BUTTERFLY VALVES
302-1	1998	JOINT RESTRAINT WITH TIE RODS (DRAWING)
302-2	1998	JOINT RESTRAINT WITH TIE RODS (NOTES)
303-1	1998	JOINT RESTRAINT FOR DUCTILE IRON AND POLYETHYLENE WRAPPED DUCTILE IRON WATER PIPES (DRAWING)
303-2	1998	JOINT RESTRAINT FOR DUCTILE IRON AND POLYETHYLENE WRAPPED DUCTILE IRON WATER PIPES (TABLES)
310	2017	STEEL WATER METER BOX COVER
315	2017	POLYMER CONCRETE WATER METER BOX COVER
319	2017	TRAFFIC RATED BOX AND COVER
320	2017	NON TRAFFIC RATED WATER METER BOXES
321	1998	STANDARD WATER METER VAULT
340	2002	INSTALLING TAPPING SLEEVES AND VALVES
342	1998	CONCRETE PRESSURE PIPE TAPPING SLEEVE
345-1	1998	3", 4", 6" WATER METER
345-2	1998	4", 6" WATER METER WITH ON-SITE HYDRANTS
346	1998	FIRE LINE DETECTOR CHECK VAULT
360-1	2013	DRY BARREL FIRE HYDRANT INSTALLATION
360-2	2013	WET BARREL FIRE HYDRANT INSTALLATION
360-3	2013	FIRE HYDRANT INSTALLATION DETAILS
362	1999	LOCATIONS FOR NEW FIRE HYDRANTS
370	1998	VERTICAL REALIGNMENT OF WATER MAINS
380	1998	THRUST BLOCKS FOR WATER LINES
381	1998	ANCHOR BLOCKS FOR VERTICAL BENDS
389	2001	CURB STOP WITH VALVE BOX AND COVER
390	2018*	CURB STOP WITH FLUSHING PIPE
391-1	2018*	VALVE BOX INSTALLATION AND GRADE ADJUSTMENT
391-2	2017	VALVE BOX INSTALLATION AND GRADE ADJUSTMENT
392	2015	DEBRIS CAP INSTALLATION
393	2017	WATER VALVE EXTENSION

400 SERIES: SEWER INFORMATION

Detail	Revised	Title
403-1	1998	PIPE SUPPORT ACROSS TRENCHES
403-2	1998	PIPE SUPPORT ACROSS TRENCHES
403-3	1998	ALTERNATIVE TO PIPE SUPPORT
404-1	2006	WATER AND SANITARY SEWER SEPARATION/PROTECTION
404-2	2006	WATER AND SANITARY SEWER SEPARATION/PROTECTION
404-3	2006	WATER AND SANITARY SEWER SEPARATION/PROTECTION
405	1998	BROKEN SEWER LINE REPLACEMENT
420-1	2015	CONCRETE SANITARY SEWER MANHOLE
420-2	2015	PRE-CAST CONCRETE MANHOLE BASE
420-3	2015	CONCRETE MANHOLE BASE
421	2015	OFFSET MANHOLE 8” TO 30” PIPE
422	2018*	MANHOLE FRAME AND COVER ADJUSTMENT
423-1	2012	24” CAST IRON MANHOLE FRAME AND COVER
423-2	2012	30” CAST IRON MANHOLE FRAME AND COVER
424-1	2012	24” CAST IRON WATERTIGHT MANHOLE FRAME AND COVER
424-2	2012	30” CAST IRON WATERTIGHT MANHOLE FRAME AND COVER
425	1998	24” ALUMINUM MANHOLE FRAME AND COVER
426	2007	DROP SEWER CONNECTIONS
427	1998	STUB OUT AND PLUGS
429	2015	INDUSTRIAL WASTE CONTROL VAULT WITH MANHOLE
440-1	2007	TYPE ‘A’ SEWER BUILDING CONNECTION - ELECTRONIC BALL MARKERS (STANDARD)
440-2	2007	TYPE ‘B’ SEWER BUILDING CONNECTION - TWO-WAY CLEANOUT AND METER BOX AT R/W
440-3	2007	TYPE ‘C’ SEWER BUILDING CONNECTION - ONE-WAY CLEANOUT AND METER BOX
440-4	2006	SEWER SERVICE CURB CROSSING STAMP DETAIL
441	2001	SEWER CLEANOUT

500 SERIES: IRRIGATION AND STORM DRAIN INFORMATION

Detail	Revised	Title
501-1	2012	HEADWALL
501-2	2012	HEADWALL
501-3	1998	HEADWALL 42” TO 84” PIPE
501-4	1998	HEADWALL IRRIGATION 18” TO 60” PIPE
501-5	2014	HEADWALL DROP INLET
502-1	1998	TRASH RACK
502-2	2004	TRASH RACK
503	2018*	IRRIGATION STANDPIPE
504	1998	CONCRETE BLOCK JUNCTION BOX
505	2018*	CONCRETE COLLAR FOR PIPE
506	1998	IRRIGATION VALVE INSTALLATION
507	2017	ENCASED CONCRETE PIPE (FOR SHALLOW INSTALLATION)
510	1998	CORRUGATED METAL PIPE AND INSTALLATION

500 SERIES: IRRIGATION AND STORM DRAIN INFORMATION (CONTINUED)

Detail	Revised	Title
520	1998	STORM DRAIN MANHOLE BASE (48” AND SMALLER)
521	1998	STORM DRAIN MANHOLE BASE (51” OR LARGER)
522	2015	STORM DRAIN MANHOLE SHAFT
523-1	1998	PRESSURE MANHOLE
523-2	1998	PRESSURE MANHOLE
524	1998	STORM DRAIN LATERAL PIPE CONNECTIONS
530	1998	3’-6” CURB OPENING CATCH BASIN - TYPE ‘A’
531	1998	5’-6” CURB OPENING CATCH BASIN - TYPE ‘B’
532	1998	8’-0” CURB OPENING CATCH BASIN - TYPE ‘C’
533-1	1998	CATCH BASIN TYPE ‘D’
533-2	1999	APRON FOR TYPE ‘D’ CATCH BASIN
533-3	2007	FRAME AND GRATE FOR TYPE ‘D’ CATCH BASIN
533-4	2007	7’-0” CURB OPENING CATCH BASIN TYPE ‘D’ - GRATE DETAILS
534-1	1998	CATCH BASIN TYPE ‘E’
534-2	1998	CATCH BASIN TYPE ‘E’ (DETAILS)
534-3	1998	CATCH BASIN TYPE ‘E’ (DETAILS)
534-4	1998	CATCH BASIN TYPE ‘E’ (DETAILS)
534-5	1998	ALTERNATE GRATE STYLES, SUMP LOCATION
535	2009	CATCH BASIN TYPE ‘F’ (FOR USE WITHOUT CURB)
536-1	1999	COMMON DETAILS AND SECTIONS FOR CURB OPENING CATCH BASINS
536-2	1998	ALTERNATIVE COVER FOR CURB OPENING CATCH BASINS
537	2002	CATCH BASIN TYPE ‘G’
538	1998	CATCH BASIN TYPE ‘H’
539	1998	GRATES FOR CATCH BASINS, TYPE G AND H
540-1	1998	CATCH BASIN GRATES
540-2	1998	CATCH BASIN GRATES
541	2005	CATCH BASIN SUBGRADE DRAIN
545	1998	END SECTION - REINFORCED CONCRETE PIPE
550	1998	SPILLWAY INLET AND OUTLET
552	2015	FORD CROSSING WITH CUT-OFF WALLS
555	2010	EROSION PROTECTION/GABIONS

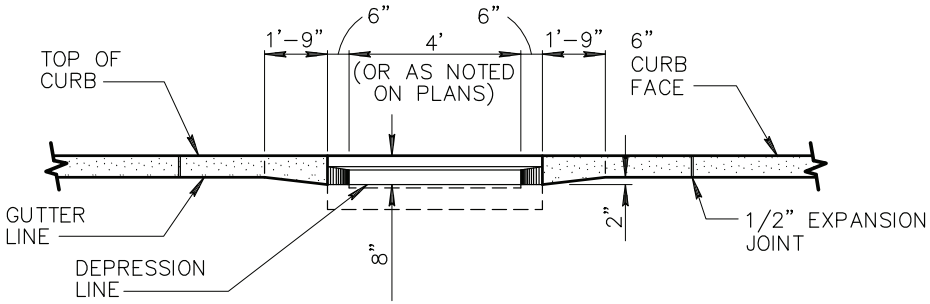

SECTION A–A

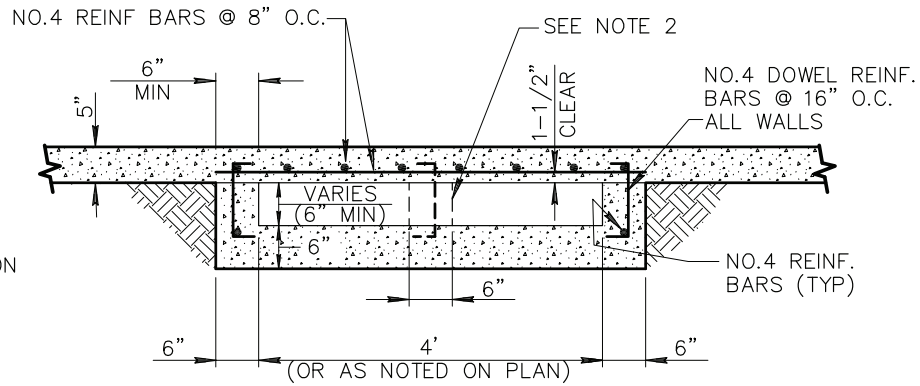

SECTION B–B

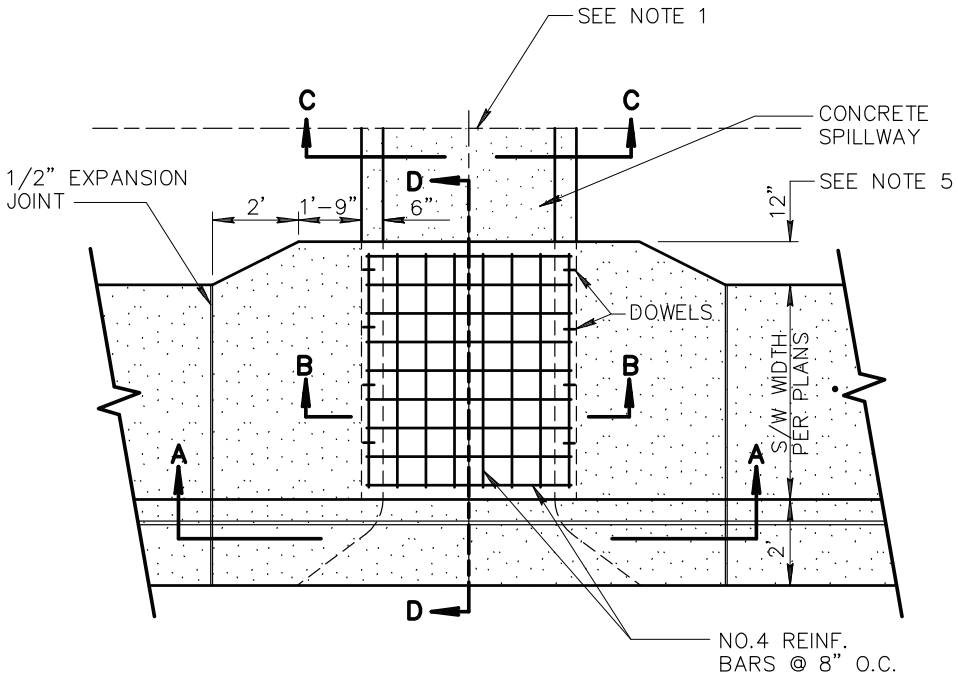

SCUPPER PLAN VIEW

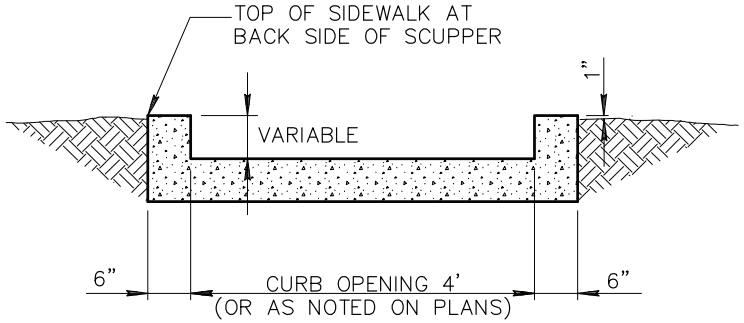

SECTION C–C SPILLWAY

NOTES:

1. TRANSITION TO SPILLWAY/CHANNEL AS PER APPROVED PLANS.
2. A CENTER WALL SHALL BE INSTALLED IN SCUPPERS WIDER THAN 4' OR IF MORE THAN 1 SCUPPER IS BUILT IN SERIES.
3. EXPANSION JOINT FILLER SHALL BE 1/2" BITUMINOUS TYPE PREFORMED EXPANSION JOINT FILLER, ASTM D–1751.
4. CONCRETE FOR THE SCUPPER SHALL BE CLASS 'A' PER SECTION 725. CONCRETE FOR THE SPILLWAY SHALL BE CLASS 'A' OR CLASS 'B'.
5. 12" OFFSET DISTANCE SHALL BE INCREASED TO 2'–6" FOR DESIGNATED BICYCLE PATHS.

DETAIL NO.				REVISED	DETAIL NO.
206–1	MARICOPA ASSOCIATION of GOVERNMENTS	STANDARD DETAIL ENGLISH	CONCRETE SCUPPER	01–01–2018	206–1

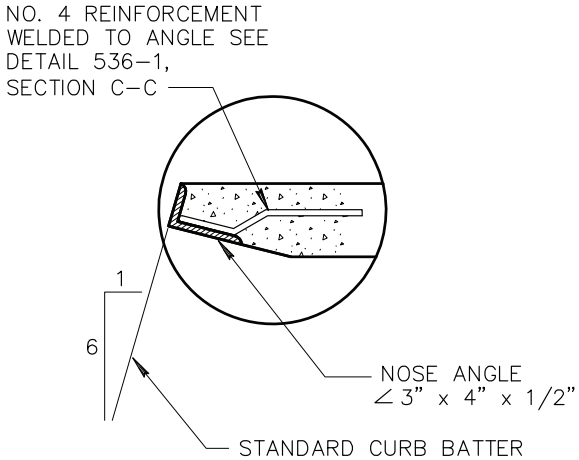

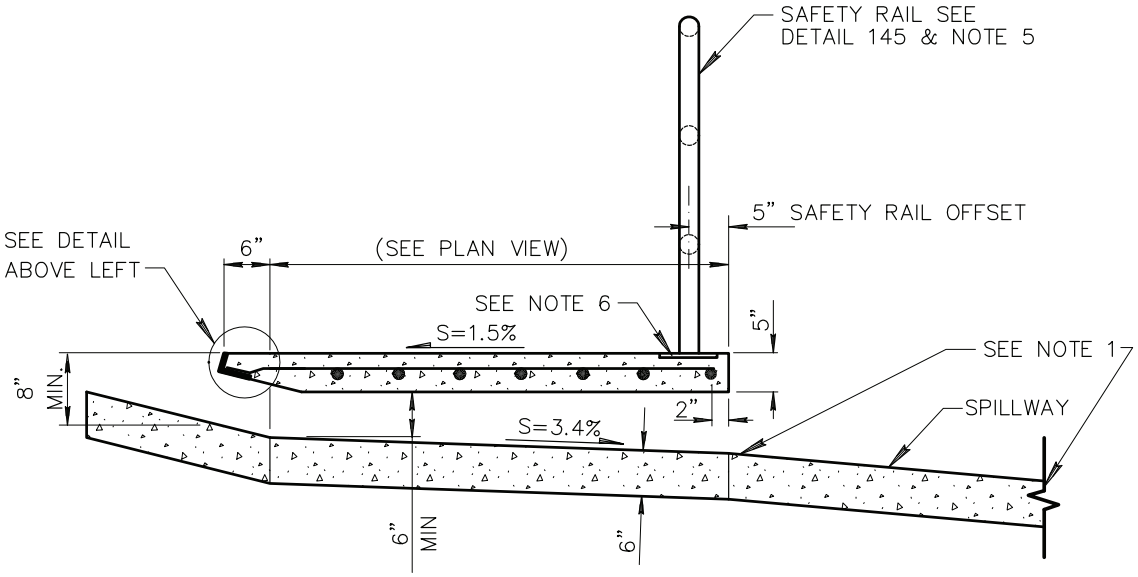

SECTION D-D

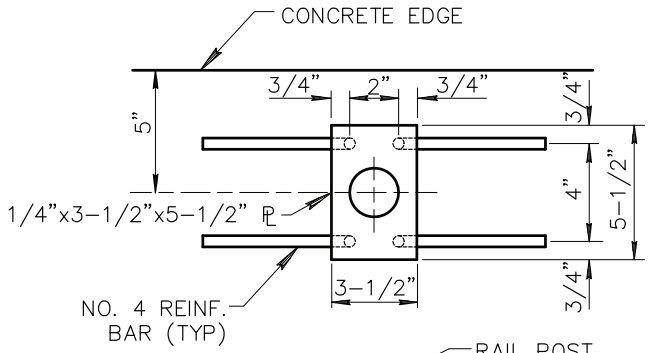

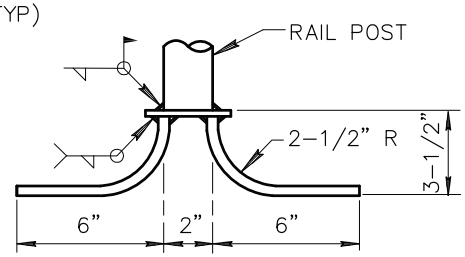

WELD PLATE

NOTES:

1. TRANSITION TO SPILLWAY/CHANNEL AS PER APPROVED PLANS.
2. A CENTER WALL SHALL BE INSTALLED IN SCUPPERS WIDER THAN 4' OR IF MORE THAN 1 SCUPPER IS BUILT IN SERIES.
3. EXPANSION JOINT FILLER SHALL BE 1/2" BITUMINOUS TYPE PREFORMED EXPANSION JOINT FILLER, ASTM D-1751.
4. CONCRETE FOR THE SCUPPER SHALL BE CLASS 'A' PER SECTION 725. CONCRETE FOR THE SPILLWAY SHALL BE CLASS 'A' OR CLASS 'B'.
5. SAFETY RAIL SHALL BE CONTINUOUS BETWEEN THE SPILLWAY EXTERIOR WALLS.
6. USE WELD PLATES FOR SAFETY RAIL ANCHORS LOCATED IN THE 5" THICK CONCRETE.

DETAIL NO.				REVISED	DETAIL NO.
206-2	MARICOPA ASSOCIATION of GOVERNMENTS	STANDARD DETAIL ENGLISH	CONCRETE SCUPPER	01-01-2007	206-2

CURB TRANSITION TO ROLL CURB

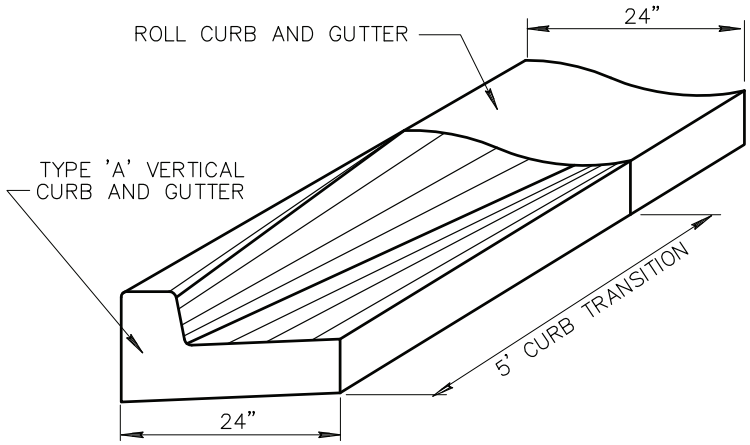

CURB AND GUTTER TRANSITION

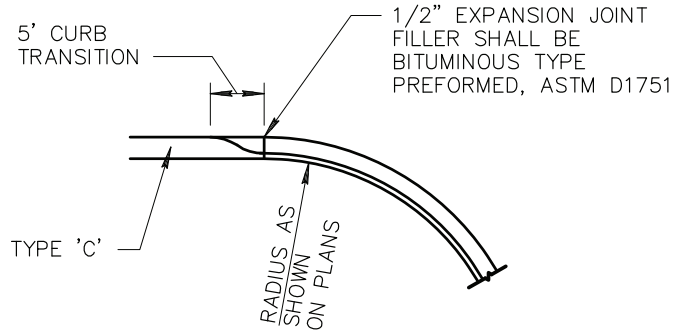

INTEGRAL ROLL CURB, GUTTER AND SIDEWALK

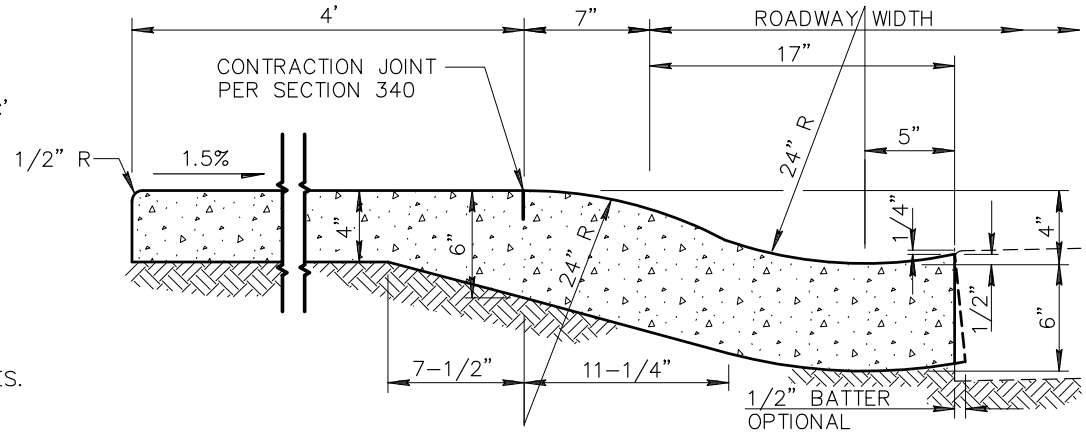

NOTES: (CURB AND GUTTER TRANSITIONS)

1. TRANSITIONS WILL BE PAID FOR AS THE PREDOMINANT TYPE OF CURB AND GUTTER BEING TRANSITIONED. WHEN TYPE 'A' CURB AND GUTTER ARE USED AT CURB RETURNS AND TYPE 'C' CURB AND GUTTER IS PREDOMINANTLY USED ELSEWHERE, THE TYPE 'A' TO TYPE 'C' TRANSITION SHALL BE MEASURED AND PAID FOR AS TYPE 'C' CURB AND GUTTER.
2. WHERE PROPOSED CONSTRUCTION IS TO BE CONNECTED TO EXISTING CURB AND GUTTER, THE TRANSITION SHALL BE INDICATED ON PLANS.
3. CLASS 'B' CONCRETE PER SECTION 725.
4. TRANSITION BETWEEN TYPICAL SECTIONS SHALL BE ACCOMPLISHED BY THE USE OF DIRECT STRAIGHT LINE TRANSITIONS OF THE FLOW LINE AND OTHER SURFACE FEATURES.

NOTES: (INTEGRAL ROLL CURB, GUTTER AND SIDEWALK)

1. CONCRETE TO BE MONOLITHIC POUR. EXPOSED SURFACE FINISH AS PER SIDEWALK AND GUTTER DETAIL.
2. CONTRACTION JOINT SPACING 5' MAXIMUM.
3. EXPANSION JOINTS PER SECTION 340.
4. CLASS 'B' CONCRETE PER SECTION 725.

DETAIL NO.				DRAFT	DETAIL NO.
221	MARICOPA ASSOCIATION of GOVERNMENTS	STANDARD DETAIL ENGLISH	**CURB AND GUTTER TRANSITION AND INTEGRAL ROLL CURB, GUTTER AND SIDEWALK**	01-01-2018	221

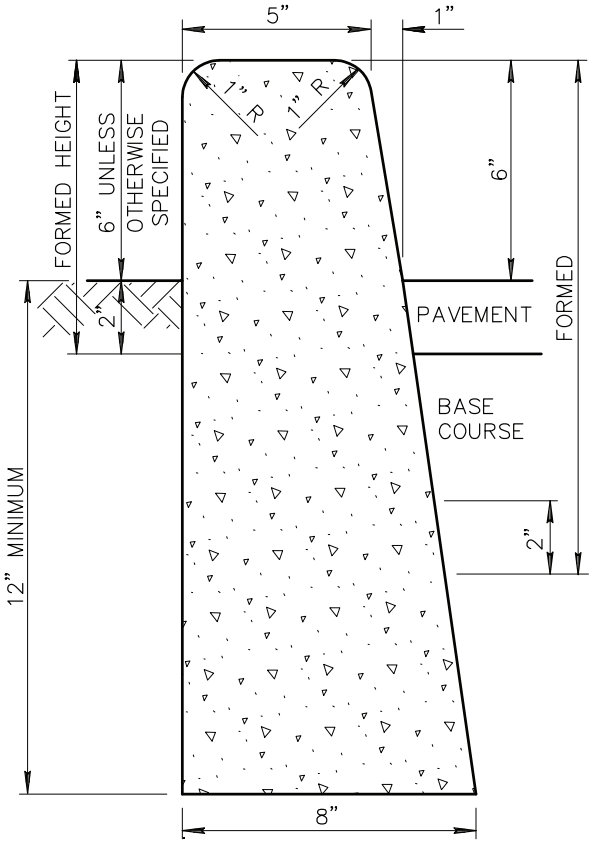

TYPE 'A'

NOTES:

1. ALL VERTICAL SURFACES TO BE FORMED.
2. VERTICAL SURFACES DOWN FROM 2" BELOW UNDISTURBED SOIL MAY BE PLACED AGAINST NEAT CUT IF APPROVED BY THE ENGINEER AND CONCRETE WILL NOT EXTEND MORE THAN 1" BEYOND THEORETICAL FACE.
3. ALL EXPOSED SURFACES TO BE STRIPPED GREEN AND TROWEL FINISHED.
4. CONCRETE CURBS CONFORM TO SECT. 340.
5. MAXIMUM SPACING OF CONTRACTION JOINTS IS 10'
6. CONCRETE TO BE CLASS 'B' PER SECT. 725.
7. WHEN PAVEMENT AND BASE COURSE EQUALS OR EXCEEDS 10" IN DEPTH, THE ENTIRE ROADWAY SIDE OF THE CURB SHALL BE FORMED. THE TOTAL CURB HEIGHT REMAINS 18" UNLESS NOTED OTHERWISE.

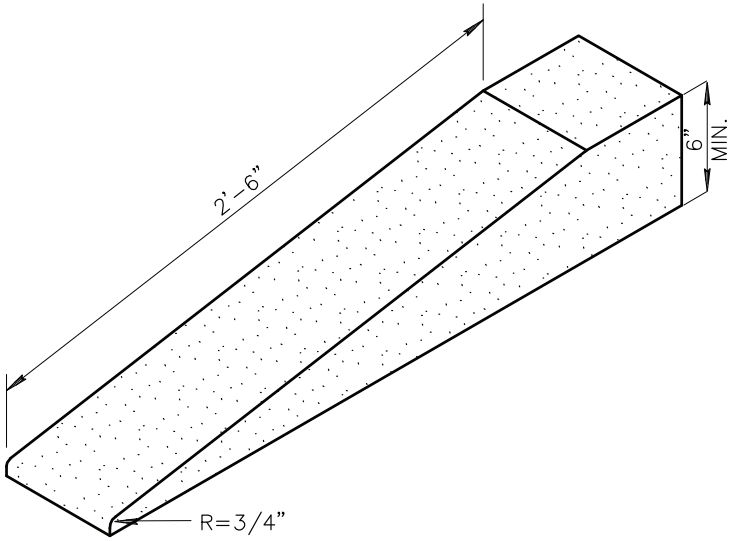

TYPICAL CURB TERMINATION

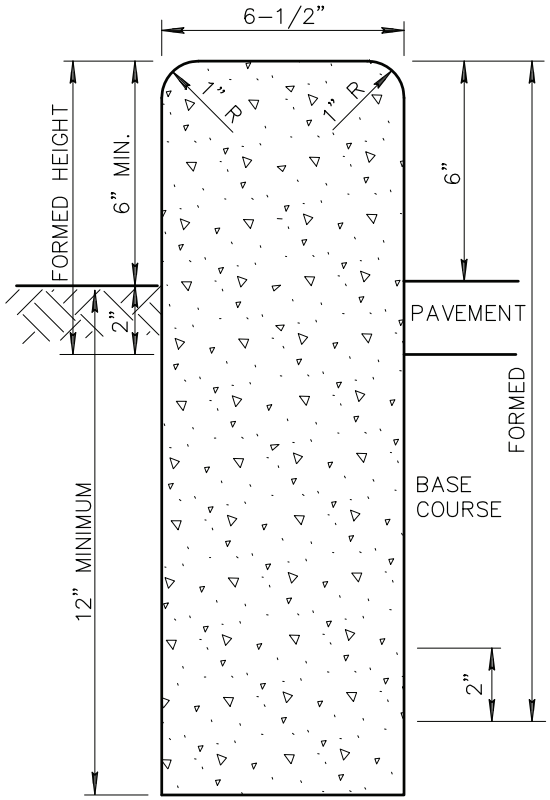

TYPE 'B'

DETAIL NO.				REVISED	DETAIL NO.
222	MARICOPA ASSOCIATION of GOVERNMENTS	STANDARD DETAIL ENGLISH	SINGLE CURB – TYPES A, B AND TERMINATION	01-01-2008	222

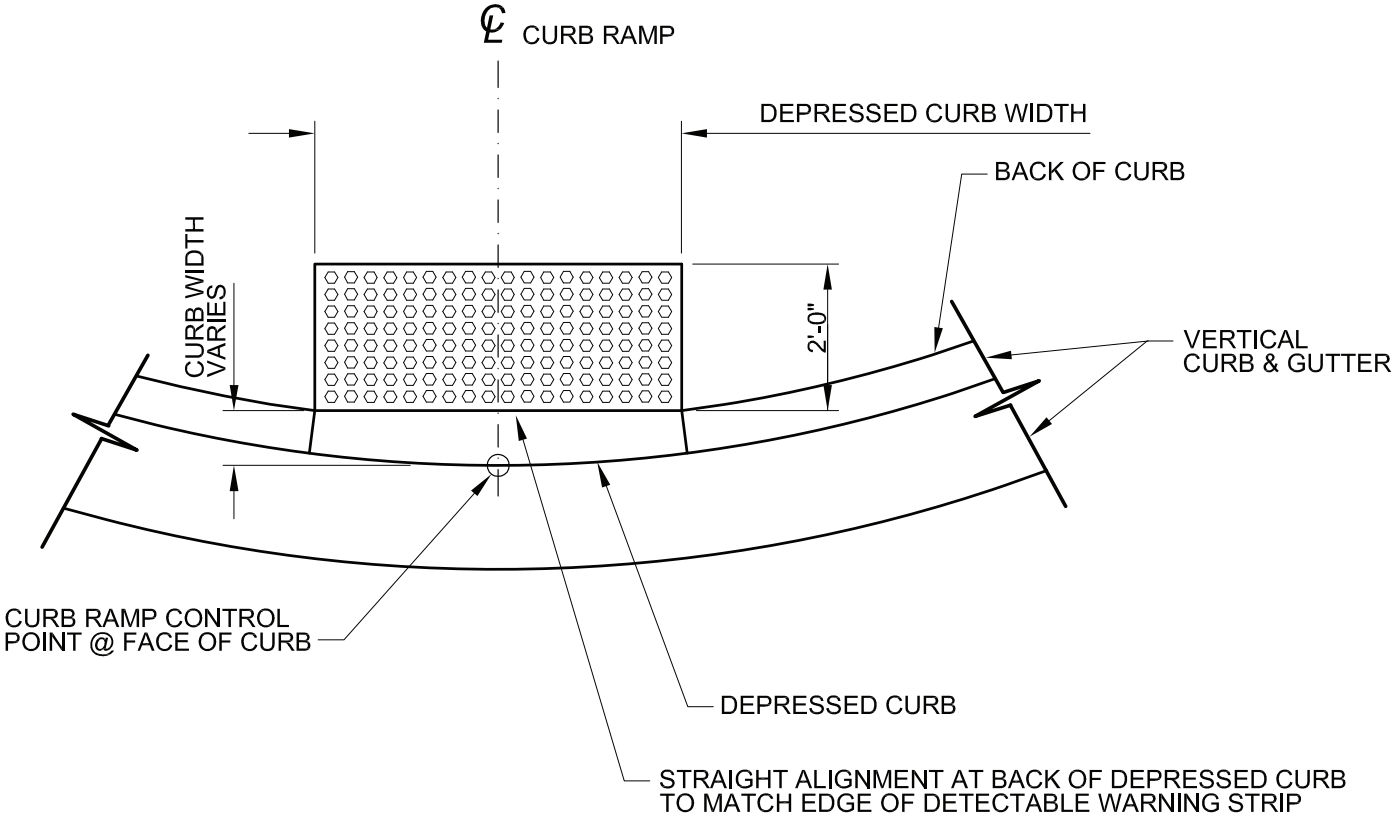

PLAN VIEW

DETAIL NO.				REVISED	DETAIL NO.
234	MARICOPA ASSOCIATION of GOVERNMENTS	STANDARD DETAIL ENGLISH	CURB MODIFICATION AT DETECTABLE WARNING	01-01-2012	234

LEGEND

RAMP CONTROL POINT AT FACE-OF-CURB SEE PLANS (TYP)

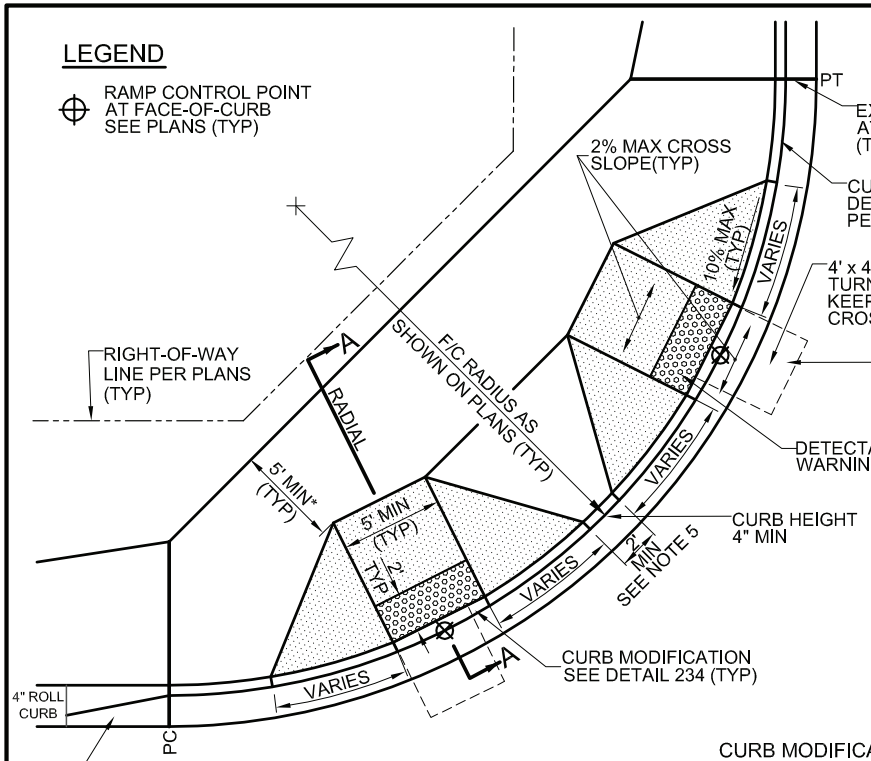

DUAL RAMP

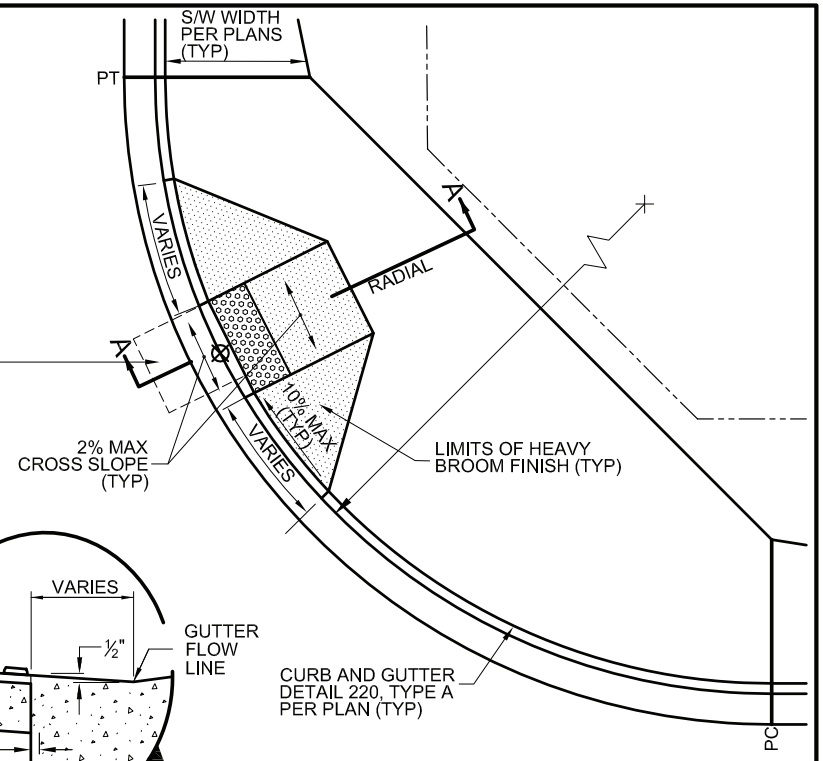

SINGLE RAMP

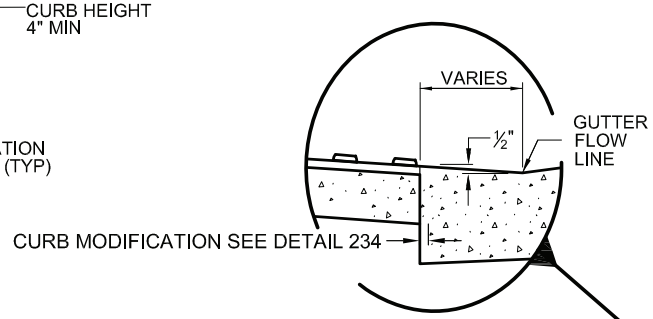

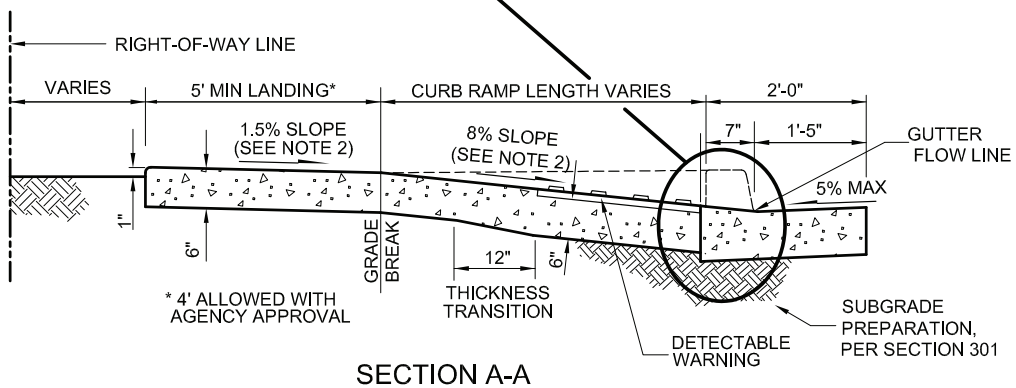

SECTION A-A

NOTES:

1. CLASS 'A' CONCRETE PER SECTION 725, PC TO PT.
2. CONSTRUCTION INCLUDING JOINTS AND MAXIMUM SLOPES SHALL CONFORM TO SECTION 340.
3. WALKWAY SURFACE TO MATCH 1.5% SLOPE FROM TOP OF CURB.
4. DETECTABLE WARNING IS TO COMPLY WITH THE JURISDICTIONAL AGENCY'S REQUIREMENTS.
5. DISTANCE BETWEEN RAMPS MAY BE ADJUSTED TO IMPROVE ALIGNMENT WITH RECEIVING RAMP WHEN ALLOWED BY THE JURISDICTIONAL AGENCY.
6. SPECIAL DESIGN IS REQUIRED FOR GUTTER GRADES GREATER THAN 2%.

DETAIL NO.		STANDARD DETAIL		REVISED	DETAIL NO.
236-1	MARICOPA ASSOCIATION of GOVERNMENTS	ENGLISH	25' - 35' R - RADIAL CURB RAMP ATTACHED SIDEWALK	01-01-2018	236-1

LEGEND

RAMP CONTROL POINT AT FACE-OF-CURB SEE PLANS (TYP)

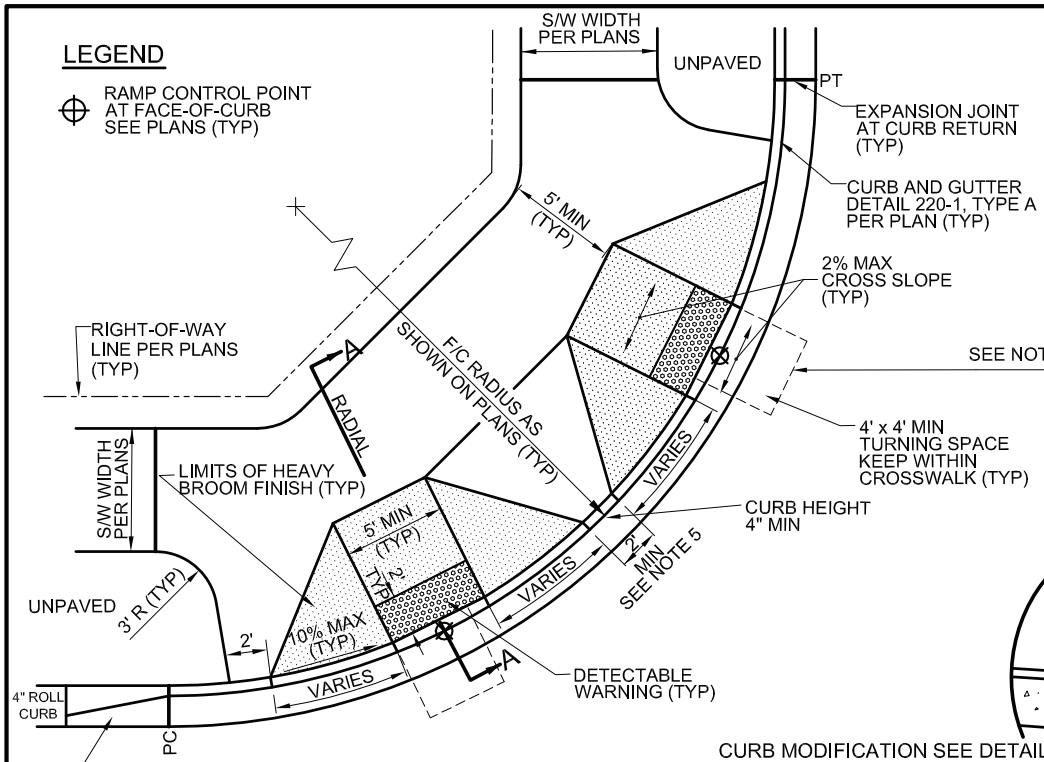

DUAL RAMP

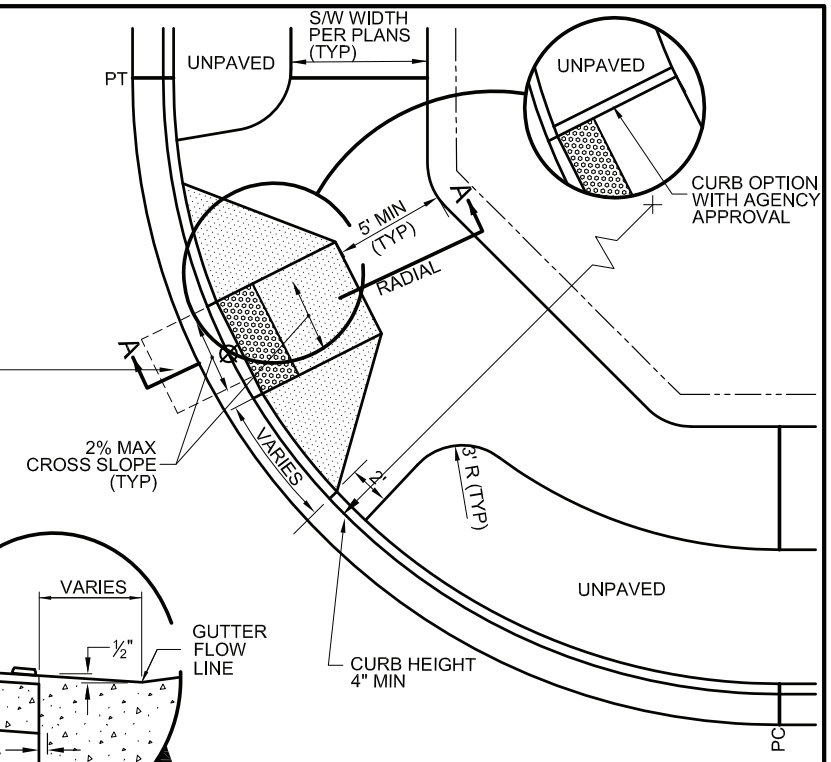

SINGLE RAMP

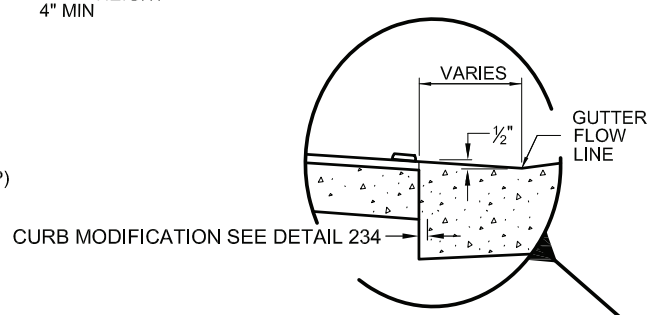

NOTES:

1. CLASS 'A' CONCRETE PER SECTION 725, PC TO PT.
2. CONSTRUCTION INCLUDING JOINTS AND MAXIMUM SLOPES SHALL CONFORM TO SECTION 340.
3. WALKWAY SURFACE TO MATCH 1.5% SLOPE FROM TOP OF CURB.
4. DETECTABLE WARNING IS TO COMPLY WITH THE JURISDICTIONAL AGENCY'S REQUIREMENTS.
5. DISTANCE BETWEEN RAMPS MAY BE ADJUSTED TO IMPROVE ALIGNMENT WITH RECEIVING RAMP WHEN ALLOWED BY THE JURISDICTIONAL AGENCY.
6. SPECIAL DESIGN IS REQUIRED FOR GUTTER GRADES GREATER THAN 2%.

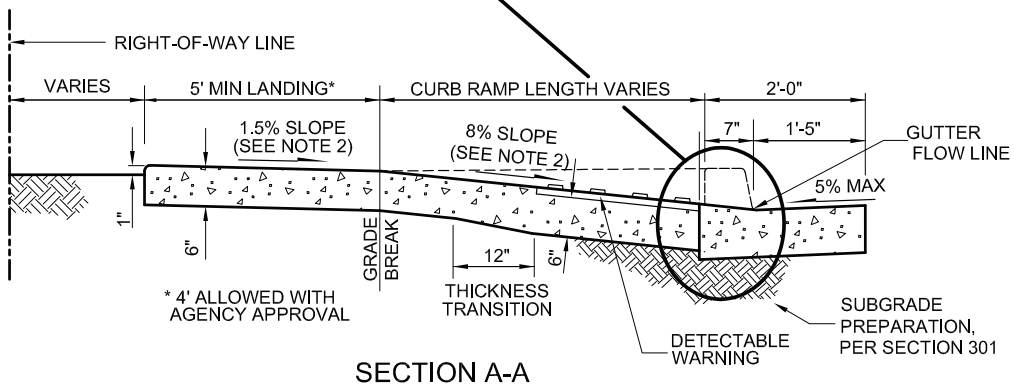

SECTION A-A

DETAIL NO.		STANDARD DETAIL		REVISED	DETAIL NO.
236-2	MARICOPA ASSOCIATION of GOVERNMENTS	ENGLISH	25' - 35' R - RADIAL CURB RAMP DETACHED SIDEWALK	01-01-2018	236-2

LEGEND

RAMP CONTROL POINT AT FACE-OF-CURB SEE PLANS (TYP)

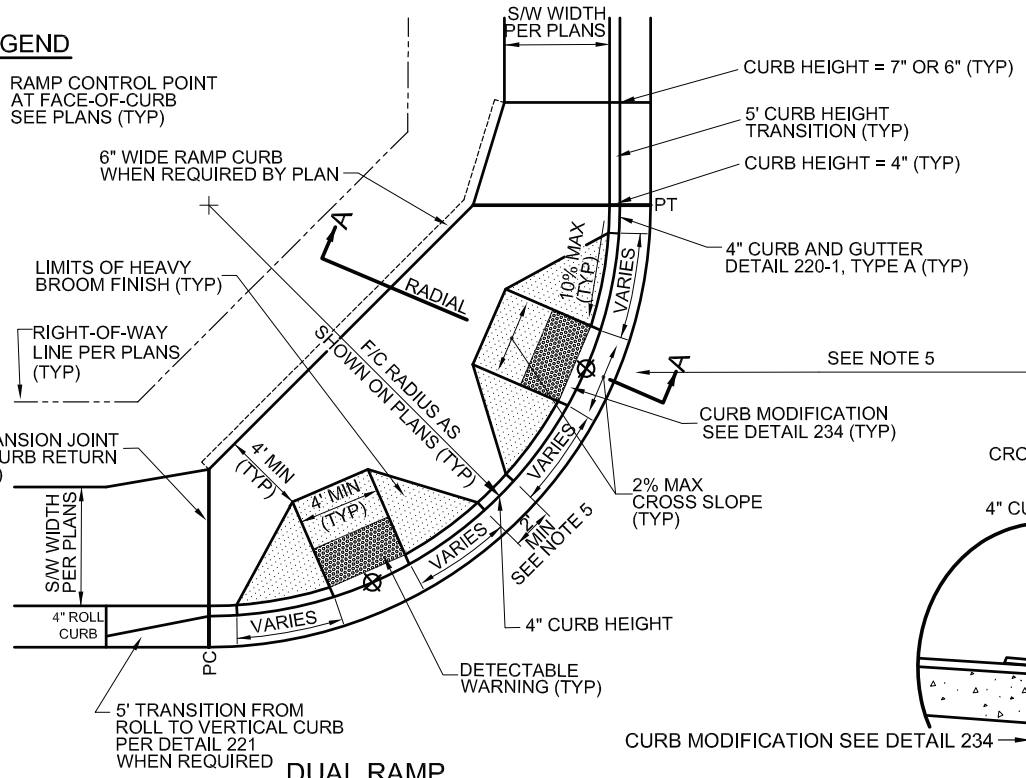

DUAL RAMP

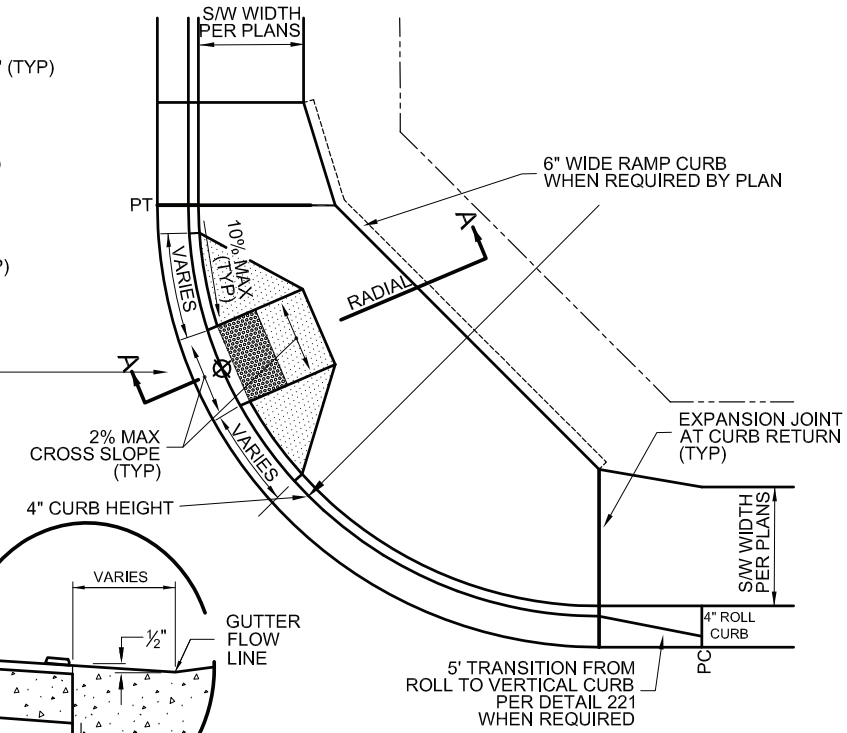

SINGLE RAMP

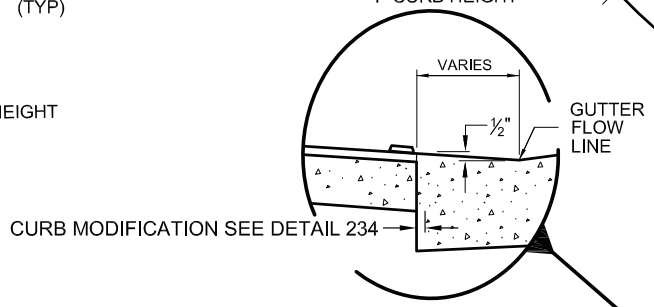

NOTES:

1. CLASS 'A' CONCRETE PER SECTION 725, PC TO PT.
2. CONSTRUCTION INCLUDING JOINTS AND MAXIMUM SLOPES SHALL CONFORM TO SECTION 340.
3. WALKWAY SURFACE TO MATCH 1.5% SLOPE FROM TOP OF CURB.
4. DETECTABLE WARNING IS TO COMPLY WITH THE JURISDICTIONAL AGENCY'S REQUIREMENTS.
5. DISTANCE BETWEEN RAMPS MAY BE ADJUSTED TO IMPROVE ALIGNMENT WITH RECEIVING RAMP WHEN ALLOWED BY THE JURISDICTIONAL AGENCY.
6. SPECIAL DESIGN IS REQUIRED FOR GUTTER GRADES GREATER THAN 2%.

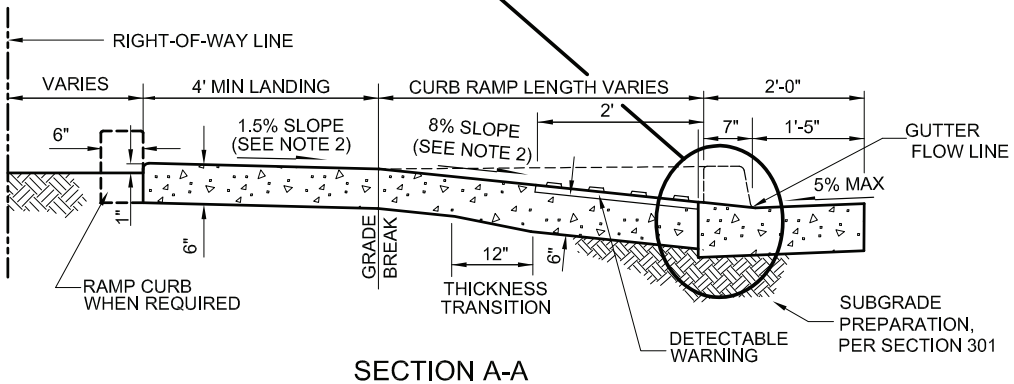

SECTION A-A

DETAIL NO.		STANDARD DETAIL		REVISED	DETAIL NO.
236-3	MARICOPA ASSOCIATION of GOVERNMENTS	ENGLISH	20' R - RADIAL CURB RAMP ATTACHED SIDEWALK	01–01–2018	236-3

LEGEND

⊕ RAMP CONTROL POINT AT FACE-OF-CURB SEE PLANS (TYP)

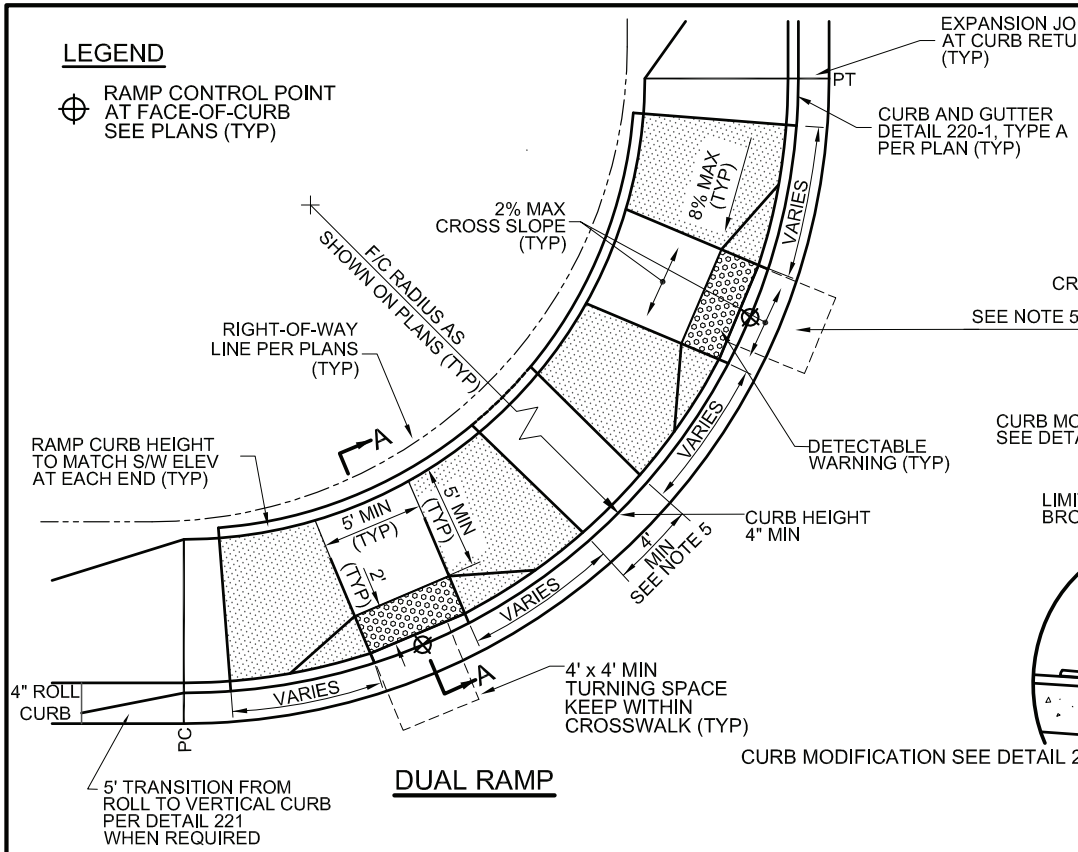

DUAL RAMP

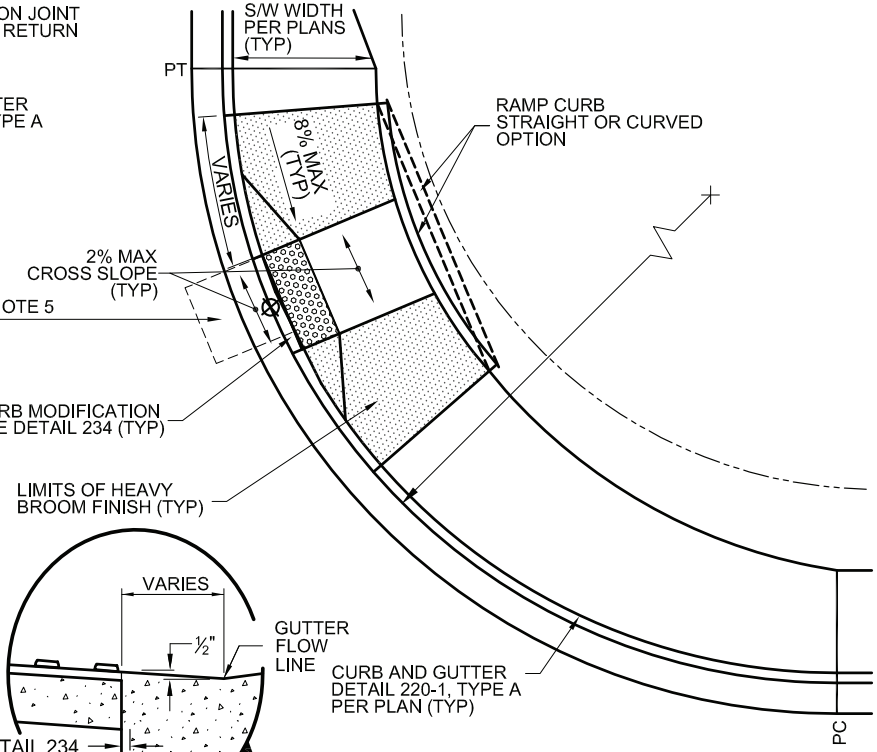

SINGLE RAMP

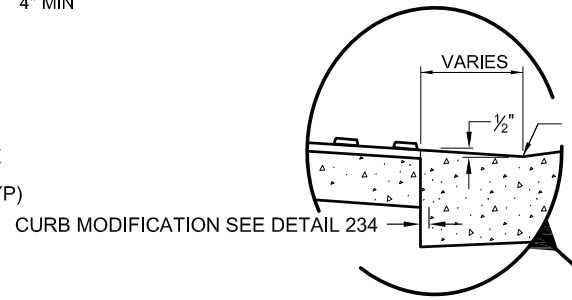

NOTES:

1. CLASS 'A' CONCRETE PER SECTION 725, PC TO PT.
2. CONSTRUCTION INCLUDING JOINTS AND MAXIMUM SLOPES SHALL CONFORM TO SECTION 340.
3. WALKWAY SURFACE TO MATCH 1 .5% SLOPE FROM TOP OF CURB.
4. DETECTABLE WARNING IS TO COMPLY WITH THE JURISDICTIONAL AGENCY'S REQUIREMENTS.
5. DISTANCE BETWEEN RAMPS MAY BE ADJUSTED TO IMPROVE ALIGNMENT WITH RECEIVING RAMP WHEN ALLOWED BY THE JURISDICTIONAL AGENCY.
6. SPECIAL DESIGN IS REQUIRED FOR GUTTER GRADES GREATER THAN 2%.

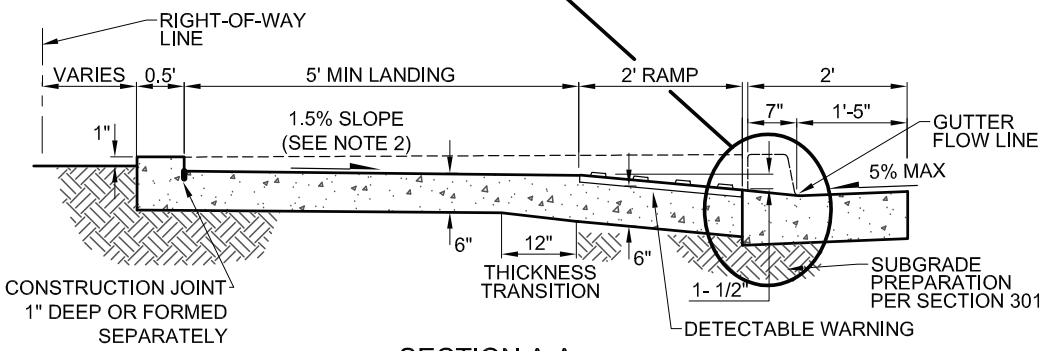

SECTION A-A

DETAIL NO.		STANDARD DETAIL		REVISED	DETAIL NO.
236-4	MARICOPA ASSOCIATION of GOVERNMENTS	ENGLISH	25' - 35' R - RADIAL COMBINATION CURB RAMP	01–01–2018	236-4

LEGEND

RAMP CONTROL POINT AT FACE-OF-CURB SEE PLANS (TYP)

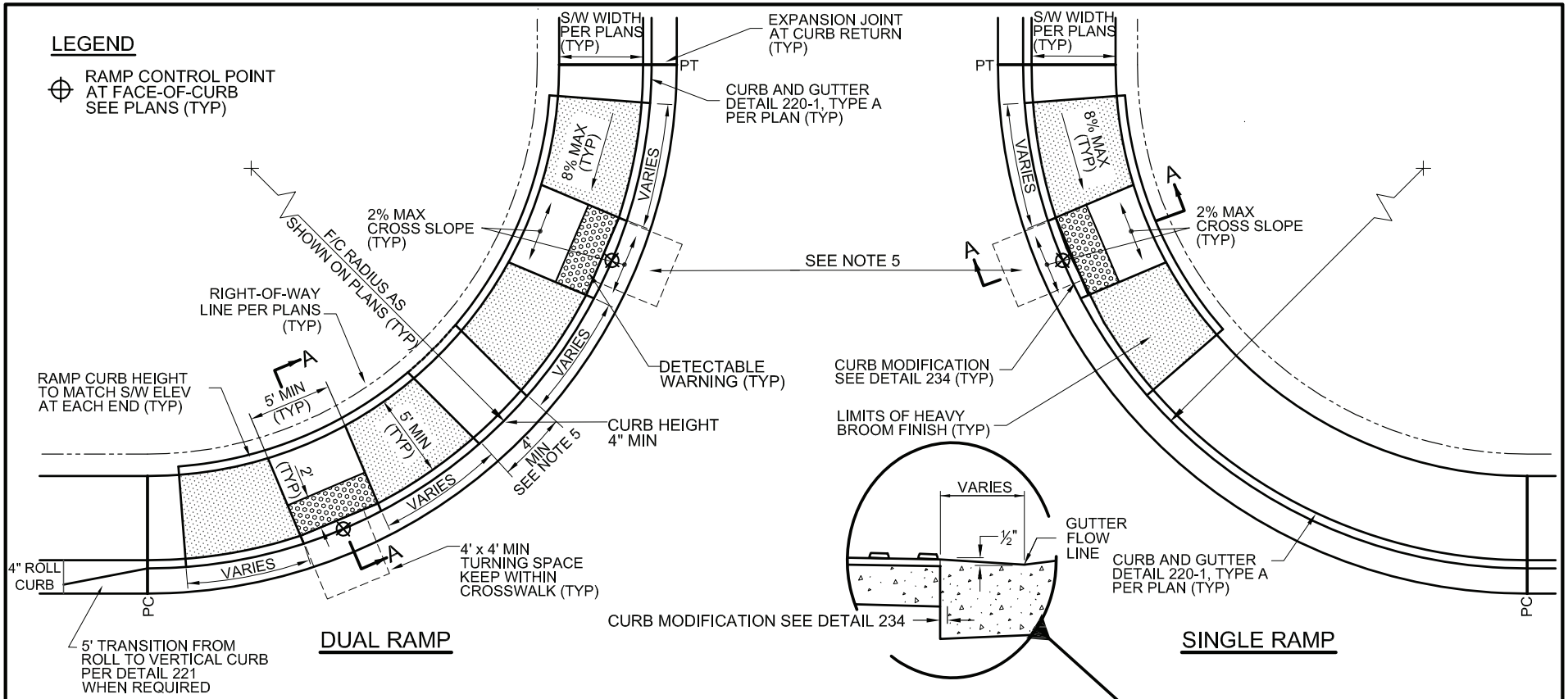

NOTES:

1. CLASS 'A' CONCRETE PER SECTION 725, PC TO PT.
2. CONSTRUCTION INCLUDING JOINTS AND MAXIMUM SLOPES SHALL CONFORM TO SECTION 340.
3. WALKWAY SURFACE TO MATCH 1 .5% SLOPE FROM TOP OF CURB.
4. DETECTABLE WARNING IS TO COMPLY WITH THE JURISDICTIONAL AGENCY'S REQUIREMENTS.
5. DISTANCE BETWEEN RAMPS MAY BE ADJUSTED TO IMPROVE ALIGNMENT WITH RECEIVING RAMP WHEN ALLOWED BY THE JURISDICTIONAL AGENCY.
6. SPECIAL DESIGN IS REQUIRED FOR GUTTER GRADES GREATER THAN 2%.
7. TYPICALLY USED FOR RETROFITS. REQUIRES AGENCY APPROVAL PRIOR TO USE.

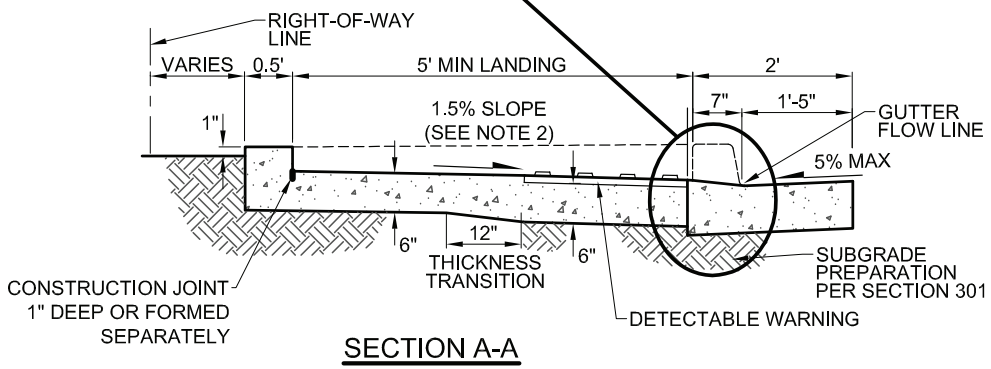

DETAIL NO.		STANDARD DETAIL		REVISED	DETAIL NO.
236-5	MARICOPA ASSOCIATION of GOVERNMENTS	ENGLISH	25' - 35' R - RADIAL PARALLEL CURB RAMP	01-01-2018	236-5

LEGEND

- RAMP CONTROL POINT AT FACE-OF-CURB SEE PLANS (TYP)
- DESIGN ELEVATION SEE PLANS FL = FLOW LINE, FG = FINISHED GRADE

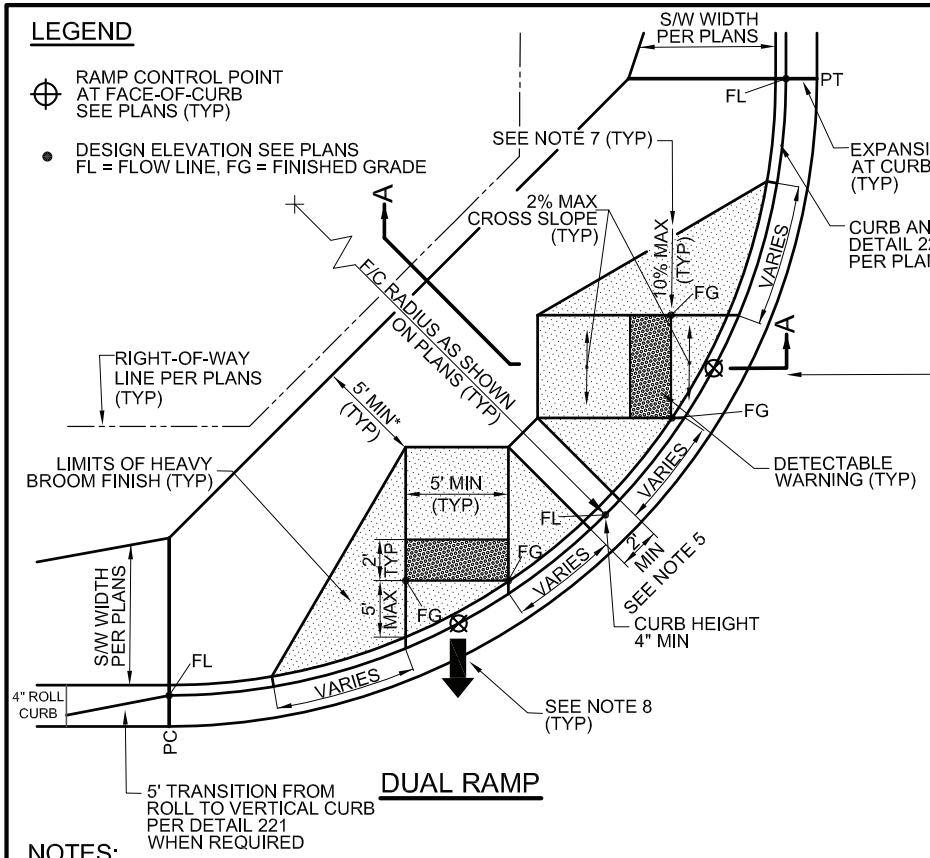

DUAL RAMP

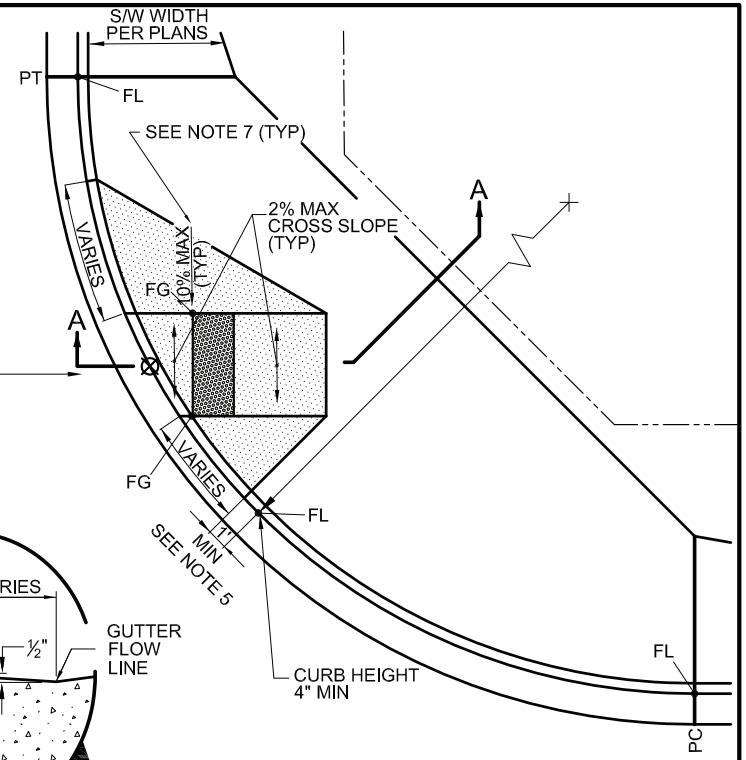

SINGLE RAMP

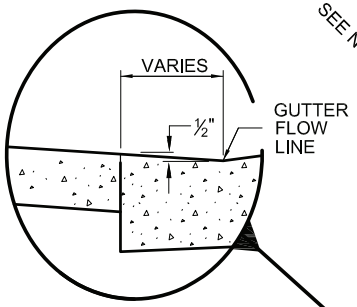

NOTES:

1. CLASS 'A' CONCRETE PER SECTION 725, PC TO PT.
2. CONSTRUCTION INCLUDING JOINTS AND MAXIMUM SLOPES SHALL CONFORM TO SECTION 340.
3. WALKWAY SURFACE TO MATCH 1.5% SLOPE FROM TOP OF CURB.
4. DETECTABLE WARNING IS TO COMPLY WITH THE JURISDICTIONAL AGENCY'S REQUIREMENTS.
5. DISTANCE BETWEEN RAMPS MAY BE ADJUSTED TO IMPROVE ALIGNMENT WITH RECEIVING RAMP WHEN ALLOWED BY THE JURISDICTIONAL AGENCY.
6. SPECIAL DESIGN IS REQUIRED FOR GUTTER GRADES GREATER THAN 2%.
7. WING SLOPE SHALL NOT EXCEED 10% MEASURED PERPENDICULAR TO RAMP.
8. RAMP ALIGNMENT SHOULD CONNECT CONTROL POINT TO CONTROL POINT OF RECEIVING RAMP WITHIN 5 FEET.

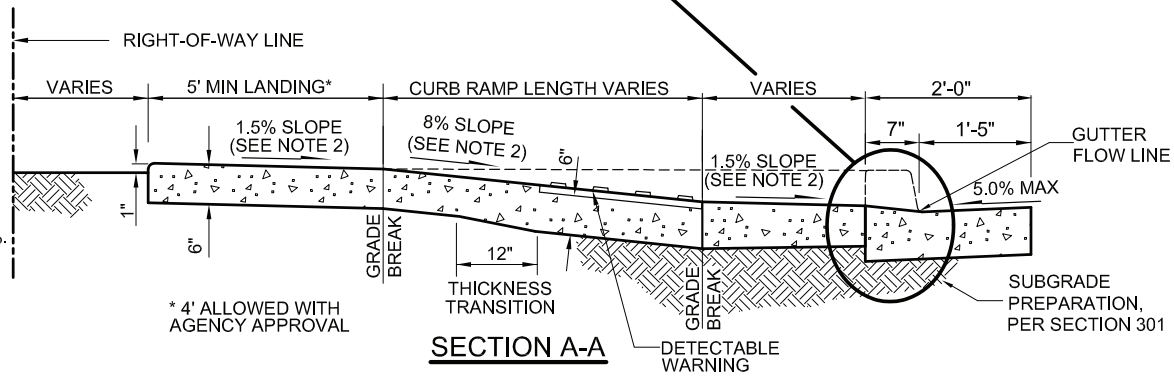

* 4' ALLOWED WITH AGENCY APPROVAL

SECTION A-A

DETAIL NO.		STANDARD DETAIL		REVISED	DETAIL NO.
237-1	MARICOPA ASSOCIATION of GOVERNMENTS	ENGLISH	25' - 35' R - DIRECTIONAL CURB RAMP ATTACHED SIDEWALK	01-01-2018	237-1

LEGEND

- RAMP CONTROL POINT AT FACE-OF-CURB SEE PLANS (TYP)
- DESIGN ELEVATION SEE PLANS FL = FLOW LINE, FG = FINISHED GRADE

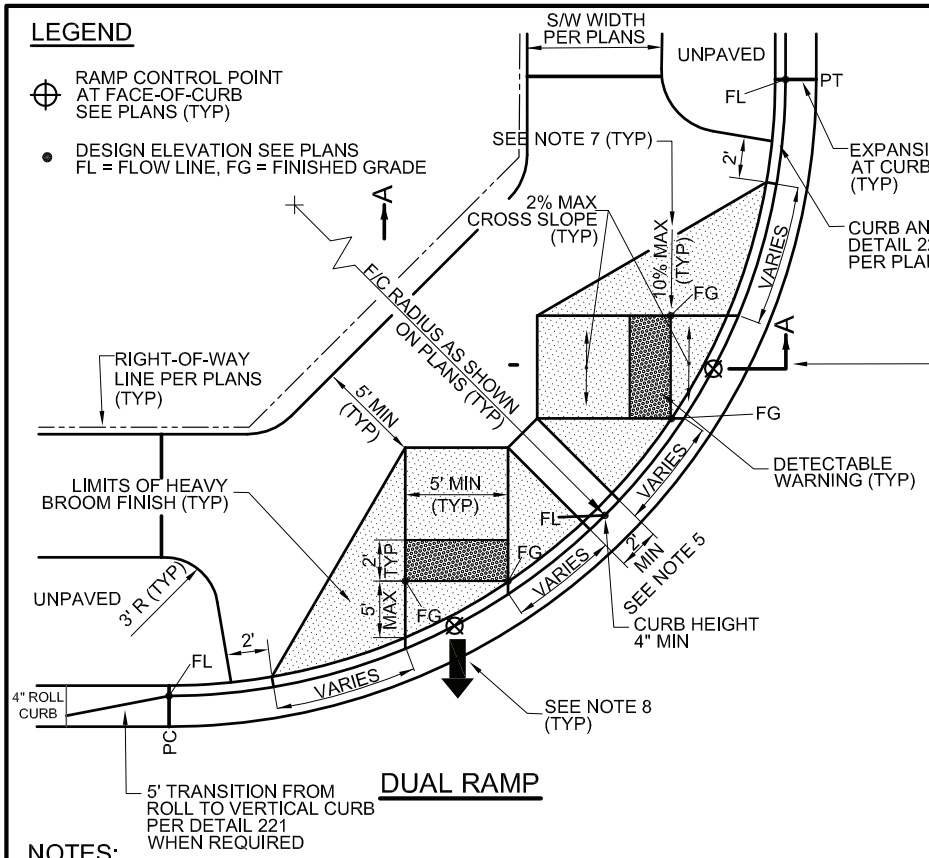

DUAL RAMP

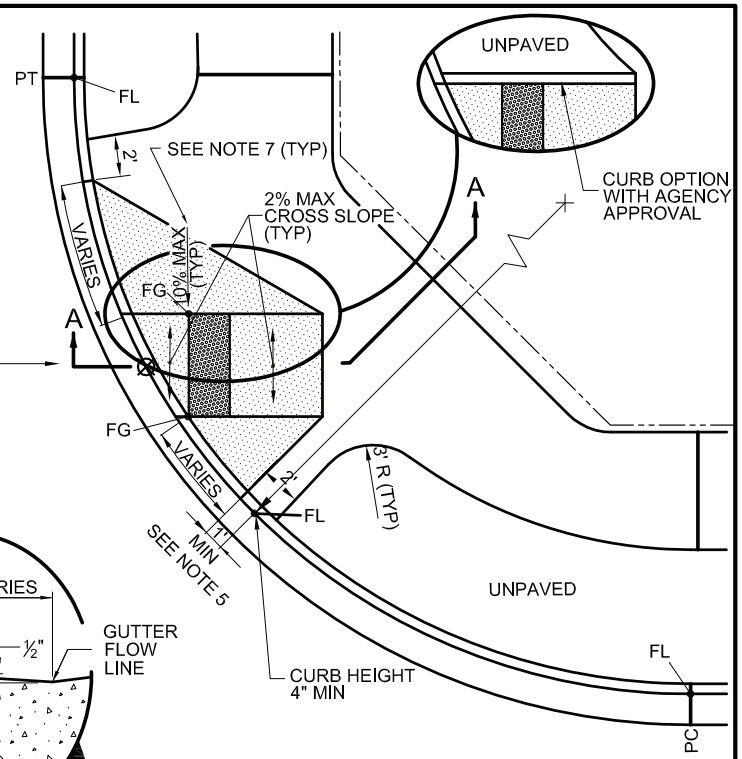

SINGLE RAMP

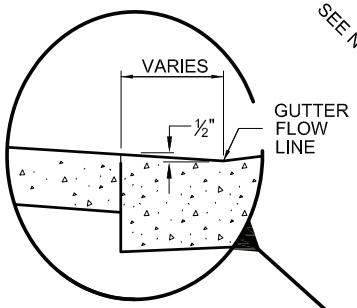

NOTES:

1. CLASS 'A' CONCRETE PER SECTION 725, PC TO PT.
2. CONSTRUCTION INCLUDING JOINTS AND MAXIMUM SLOPES SHALL CONFORM TO SECTION 340.
3. WALKWAY SURFACE TO MATCH 1.5% SLOPE FROM TOP OF CURB.
4. DETECTABLE WARNING IS TO COMPLY WITH THE JURISDICTIONAL AGENCY'S REQUIREMENTS.
5. DISTANCE BETWEEN RAMPS MAY BE ADJUSTED TO IMPROVE ALIGNMENT WITH RECEIVING RAMP WHEN ALLOWED BY THE JURISDICTIONAL AGENCY.
6. SPECIAL DESIGN IS REQUIRED FOR GUTTER GRADES GREATER THAN 2%.
7. WING SLOPE SHALL NOT EXCEED 10% MEASURED PERPENDICULAR TO RAMP.
8. RAMP ALIGNMENT SHOULD CONNECT CONTROL POINT TO CONTROL POINT OF RECEIVING RAMP WITHIN 5 FEET.

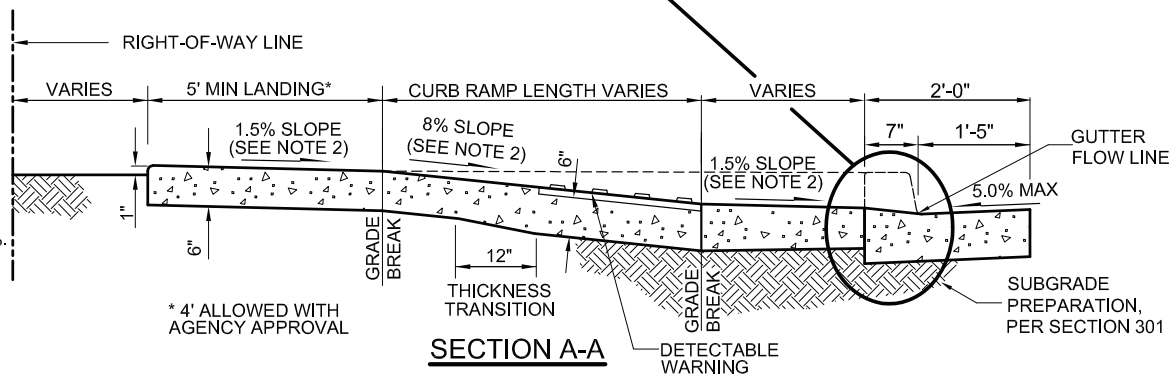

SECTION A-A

DETAIL NO.		STANDARD DETAIL		REVISED	DETAIL NO.
237-2	MARICOPA ASSOCIATION of GOVERNMENTS	ENGLISH	25' - 35' R - DIRECTIONAL CURB RAMP DETACHED SIDEWALK	01-01-2018	237-2

LEGEND

- RAMP CONTROL POINT AT FACE-OF-CURB SEE PLANS (TYP)
- DESIGN ELEVATION SEE PLANS FL = FLOW LINE, FG = FINISHED GRADE

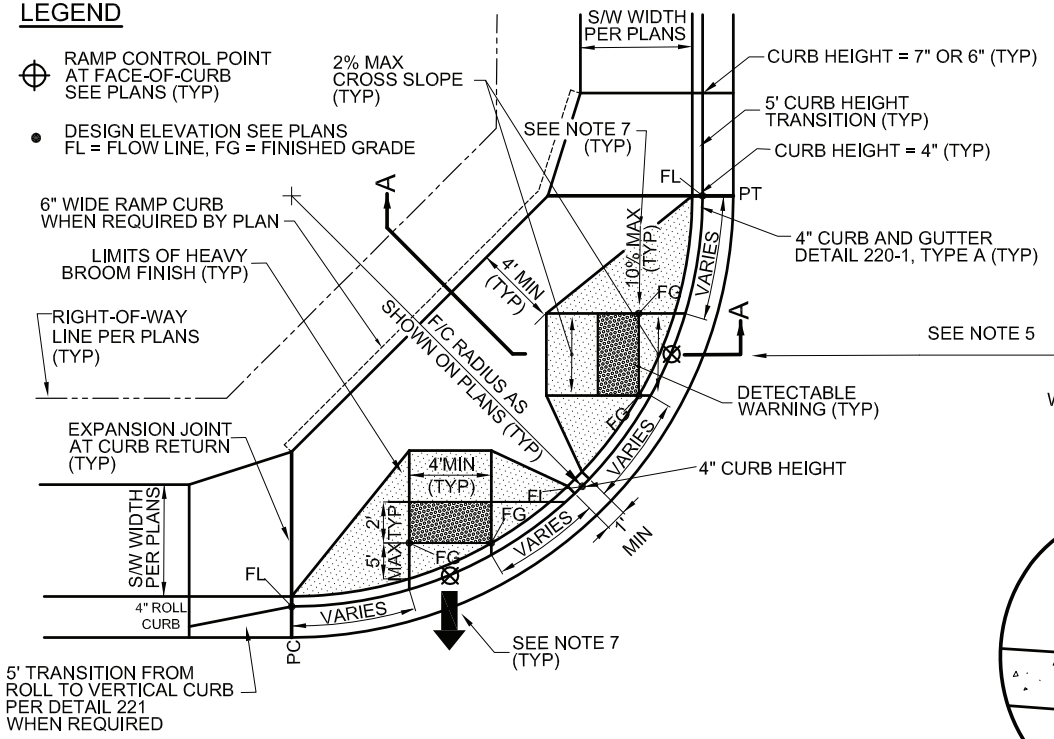

DUAL RAMP

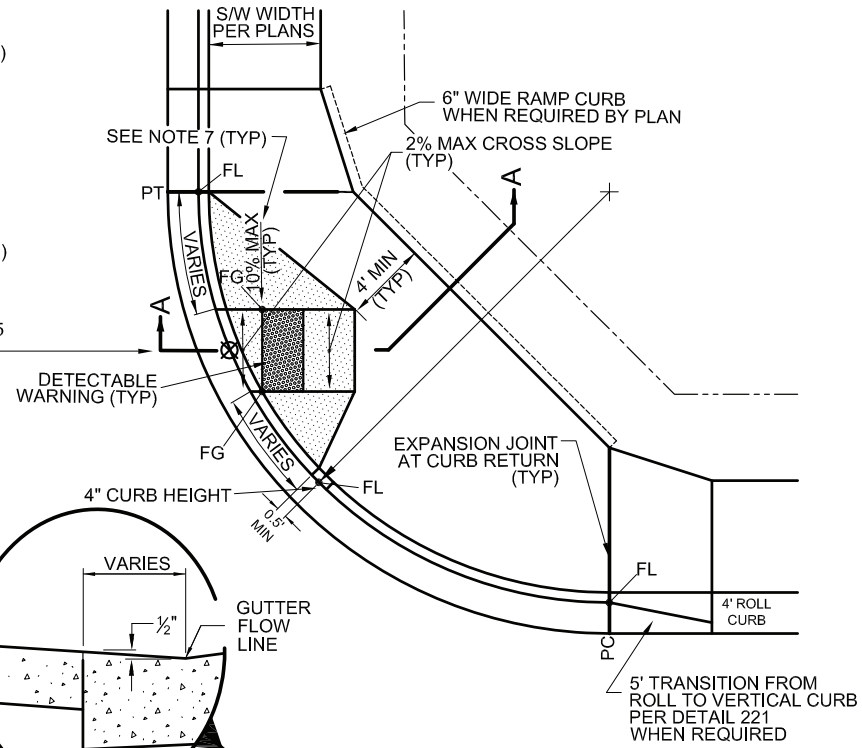

SINGLE RAMP

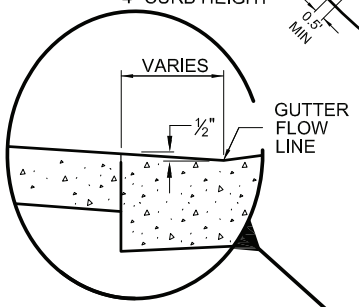

NOTES:

1. CLASS 'A' CONCRETE PER SECTION 725, PC TO PT.
2. CONSTRUCTION INCLUDING JOINTS AND MAXIMUM SLOPES SHALL CONFORM TO SECTION 340.
3. WALKWAY SURFACE TO MATCH 1.5% SLOPE FROM TOP OF CURB.
4. DETECTABLE WARNING IS TO COMPLY WITH THE JURISDICTIONAL AGENCY'S REQUIREMENTS.
5. SPECIAL DESIGN IS REQUIRED FOR GUTTER GRADES GREATER THAN 2%.
6. WING SLOPE SHALL NOT EXCEED 10% MEASURED PERPENDICULAR TO RAMP.
7. RAMP ALIGNMENT SHOULD CONNECT CONTROL POINT TO CONTROL POINT OF RECEIVING RAMP WITHIN 5 FEET.

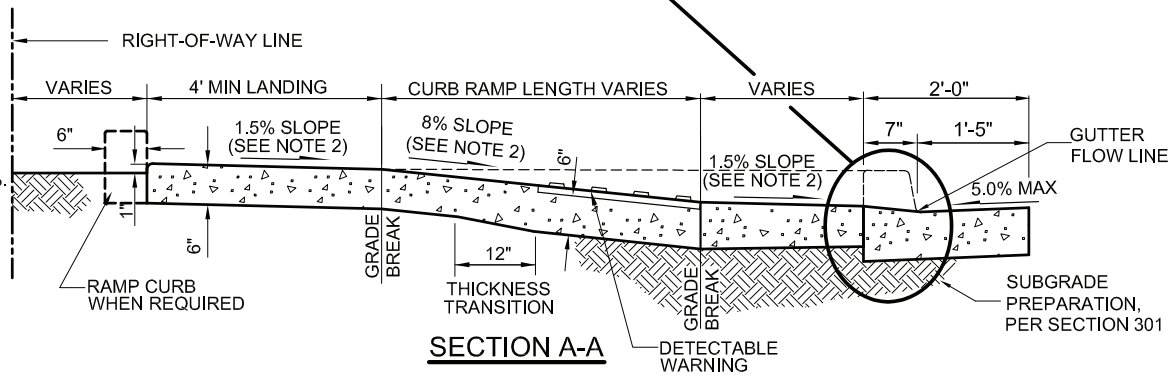

SECTION A-A

DETAIL NO.		STANDARD DETAIL		REVISED	DETAIL NO.
237-3	MARICOPA ASSOCIATION of GOVERNMENTS	ENGLISH	20' R - DIRECTIONAL CURB RAMP ATTACHED SIDEWALK	01–01–2018	237-3

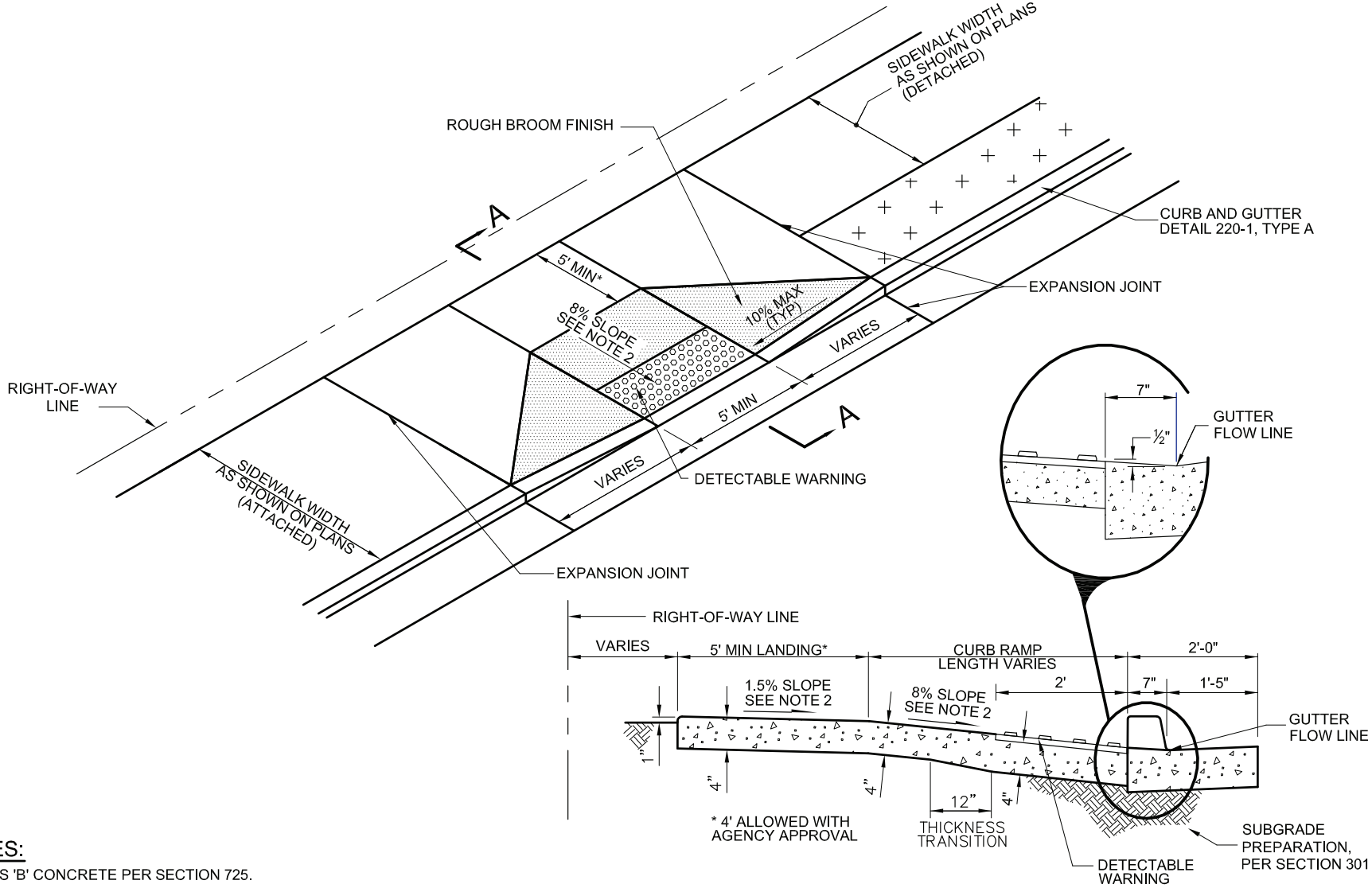

SECTION A-A

NOTES:

1. CLASS 'B' CONCRETE PER SECTION 725.
2. CONSTRUCTION INCLUDING JOINTS AND MAXIMUM SLOPES SHALL CONFORM TO SECTION 340.
3. SIDEWALK SURFACE TO MATCH 1.5% SLOPE FROM TOP OF CURB.
4. DETECTABLE WARNING IS TO COMPLY WITH THE JURISDICTIONAL AGENCY'S REQUIREMENTS.

DETAIL NO.		STANDARD DETAIL		REVISED	DETAIL NO.
238-1	MARICOPA ASSOCIATION of GOVERNMENTS	ENGLISH	PERPENDICULAR CURB RAMP	01-01-2018	238-1

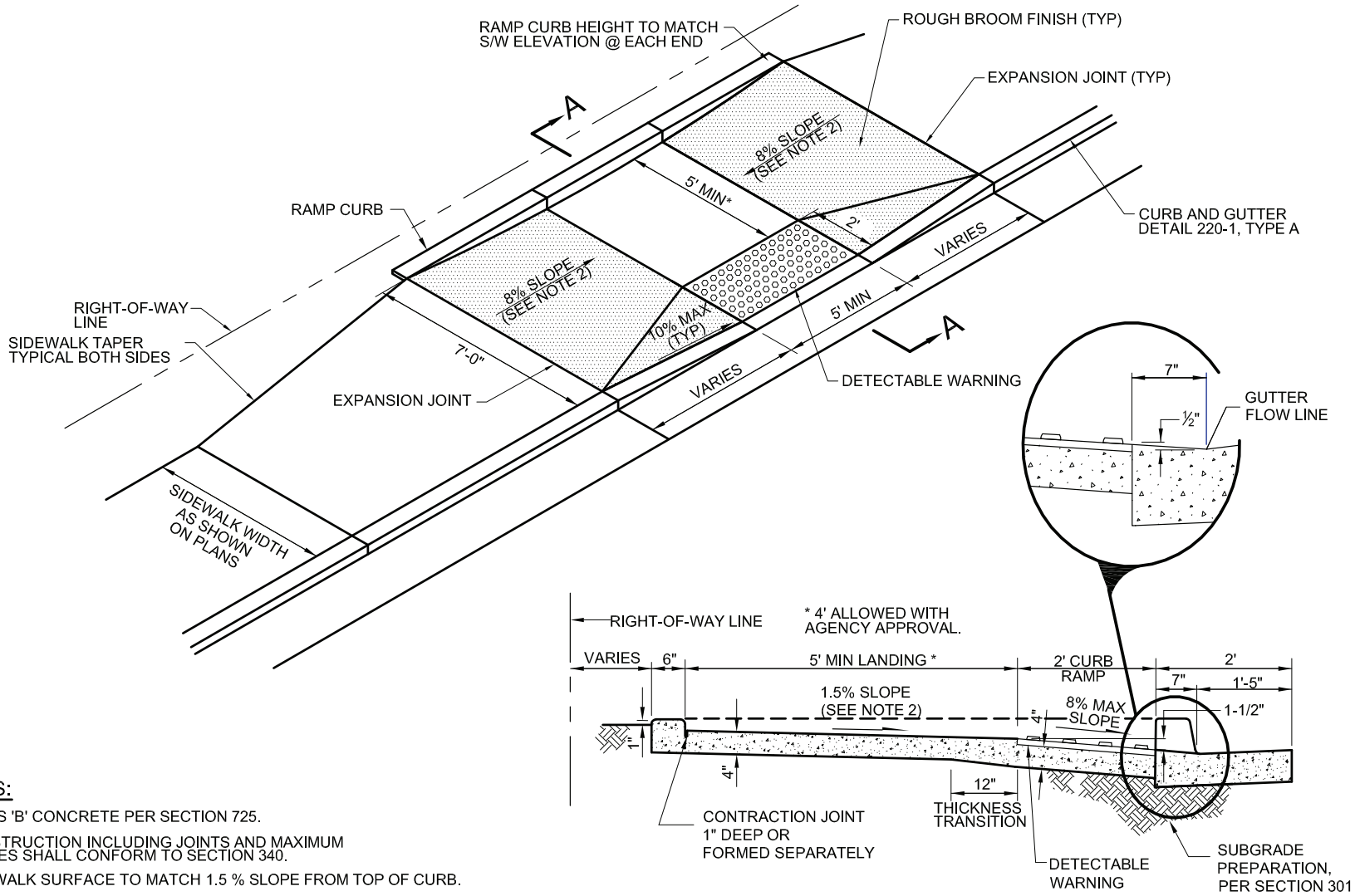

SECTION A-A

NOTES:

1. CLASS 'B' CONCRETE PER SECTION 725.
2. CONSTRUCTION INCLUDING JOINTS AND MAXIMUM SLOPES SHALL CONFORM TO SECTION 340.
3. SIDEWALK SURFACE TO MATCH 1.5 % SLOPE FROM TOP OF CURB.
4. DETECTABLE WARNING IS TO COMPLY WITH THE JURISDICTIONAL AGENCY'S REQUIREMENTS.

DETAIL NO.		STANDARD DETAIL		REVISED	DETAIL NO.
238-2	MARICOPA ASSOCIATION of GOVERNMENTS	ENGLISH	COMBINATION CURB RAMP	01–01–2018	238-2

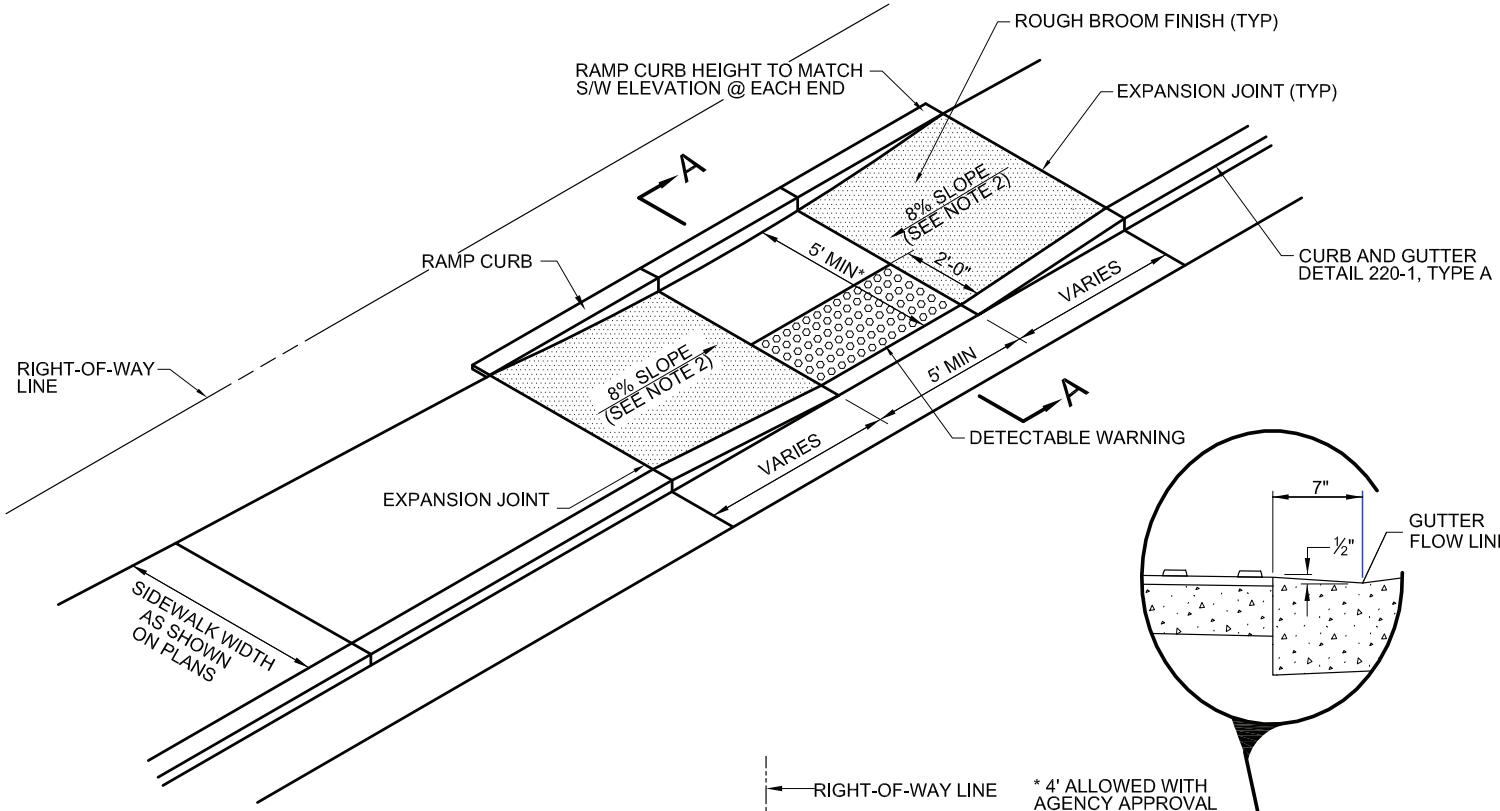

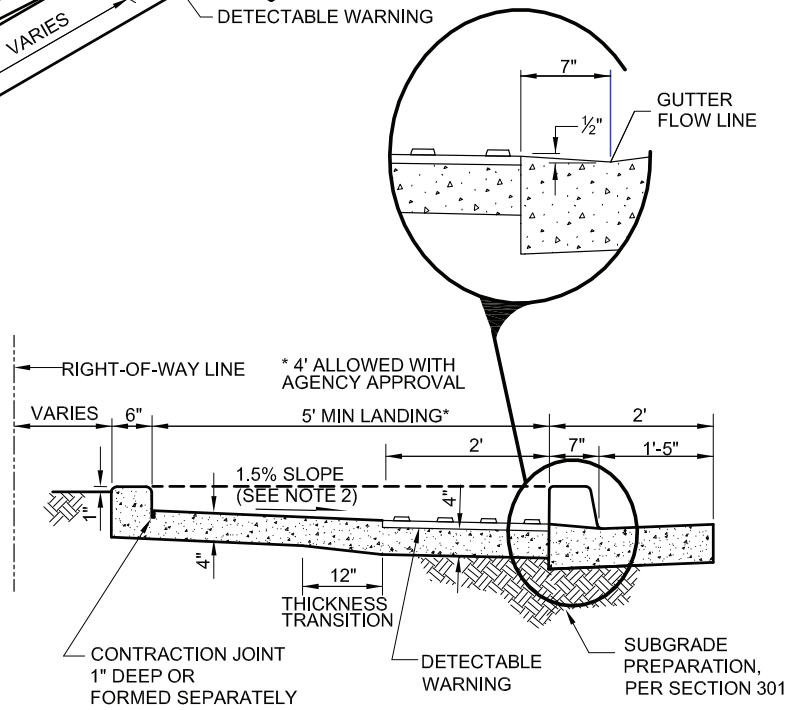

SECTION A-A

NOTES:

1. CLASS 'B' CONCRETE PER SECTION 725.
2. CONSTRUCTION INCLUDING JOINTS AND MAXIMUM SLOPES SHALL CONFORM TO SECTION 340.
3. SIDEWALK SURFACE TO MATCH 1.5 % SLOPE FROM TOP OF CURB.
4. DETECTABLE WARNING IS TO COMPLY WITH THE JURISDICTIONAL AGENCY'S REQUIREMENTS.
5. TYPICALLY USED FOR RETROFITS. REQUIRES AGENCY APPROVAL PRIOR TO USE.

DETAIL NO.				REVISED	DETAIL NO.
238-3	MARICOPA ASSOCIATION of GOVERNMENTS	STANDARD DETAIL ENGLISH	PARALLEL CURB RAMP	01–01–2018	238-3

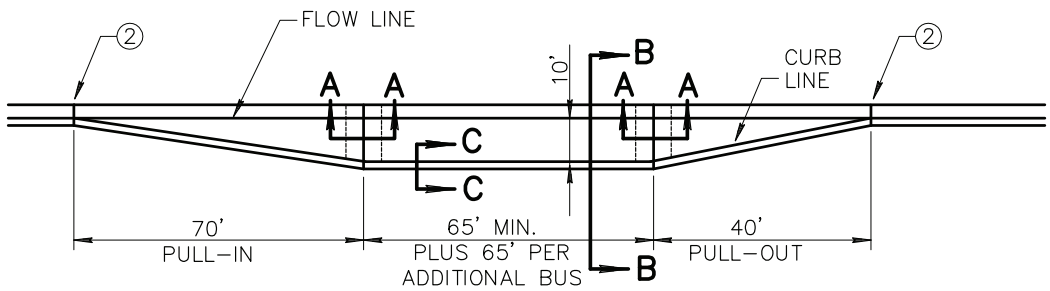

DETAIL

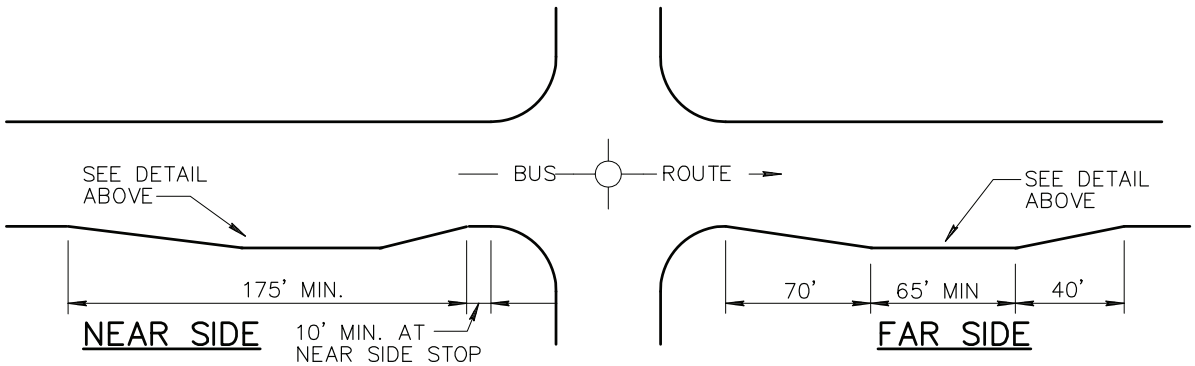

NEAR SIDE

FAR SIDE

NOTES:

1. SUFFICIENT RIGHT-OF-WAY MUST BE AVAILABLE TO CONSTRUCT THE BUS BAY.
2. 1/2" BITUMINOUS PREFORMED EXPANSION JOINT FILLER ASTM D-1751 PER SPECIFICATION SECTION 729.
3. SUBGRADE PREPARATION PER SPECIFICATION SECTION 301 COMPACTED TO 95% MINIMUM DENSITY.
4. CONCRETE SHALL BE CLASS 'A' PER SPECIFICATION SECTION 725.
5. CONCRETE BUS BAY PAVEMENT SHALL BE BROOM FINISHED, EXCEPT WHERE OTHERWISE NOTED.
6. CONTRACTION JOINTS IN THE BUS BAY PAVEMENT SHALL MATCH THOSE IN THE CURB, 15 FT. MAXIMUM SPACING.
7. CONCRETE BEARING PAD (SECTION A-A) TO BE POURED SEPARATELY FROM CONCRETE BUS BAY PAVEMENT.

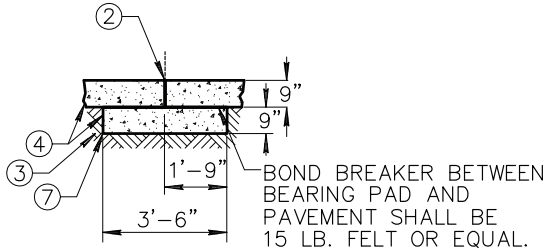

SECTION A-A

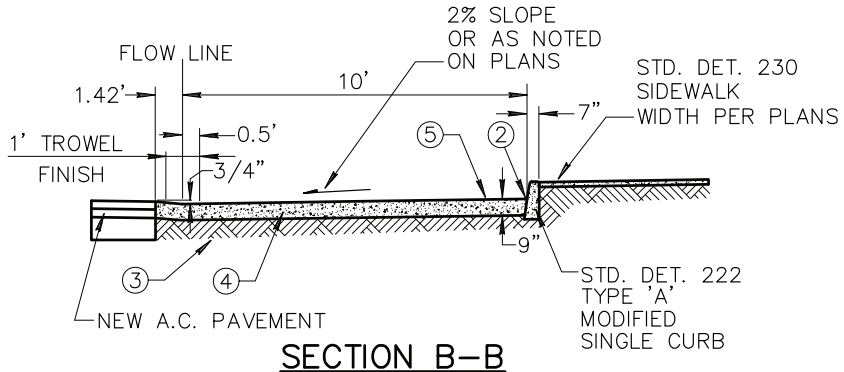

SECTION B-B

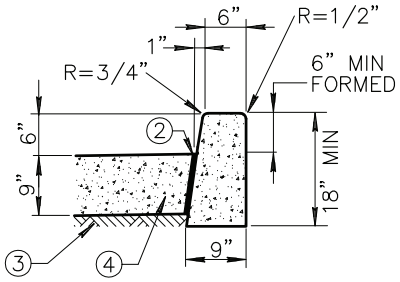

SECTION C-C

STD. DET. 222 TYPE 'A' MODIFIED SINGLE CURB

DETAIL NO.				REVISED	DETAIL NO.
252	MARICOPA ASSOCIATION of GOVERNMENTS	STANDARD DETAIL ENGLISH	BUS BAYS	01-01-2005	252

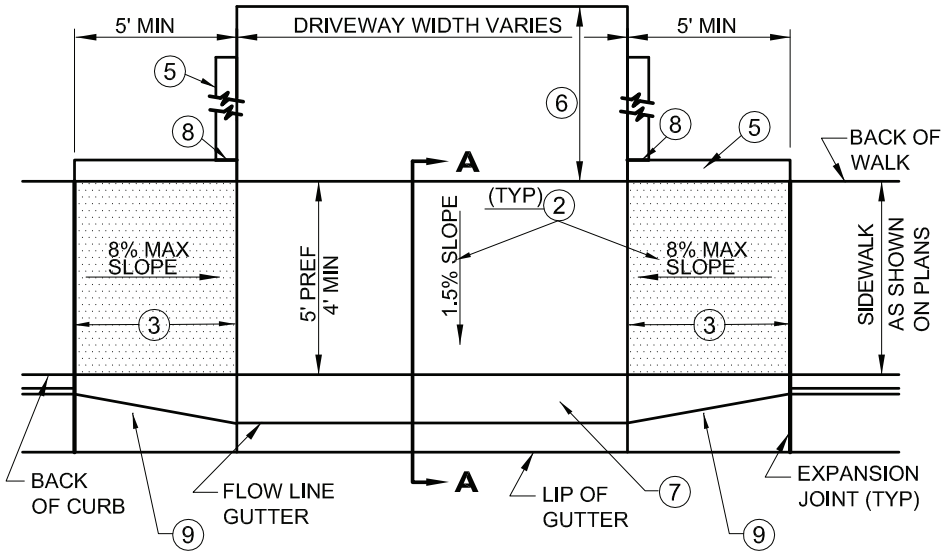

PLAN VIEW

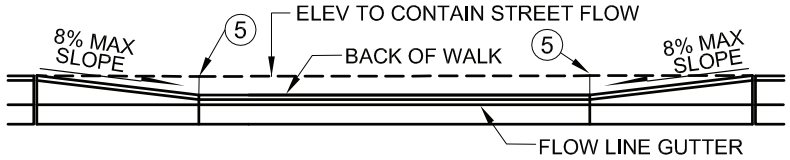

ELEVATION

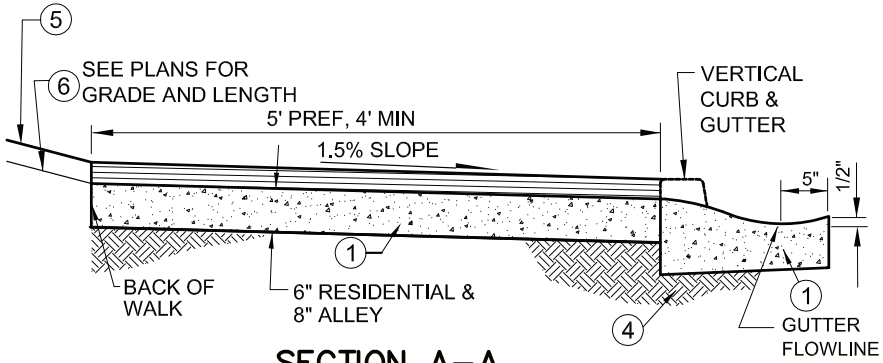

SECTION A–A

NOTES:

1. CLASS "A" CONCRETE PER SECTION 725.
2. CONSTRUCTION INCLUDING EXPANSION JOINTS AND MAXIMUM SLOPES SHALL CONFORM TO SECTON 340.
3. LIMITS OF ROUGH BROOM FINISH.
4. SUBGRADE PREPARATION PER SECTION 301.
5. SINGLE CURB PER DETAIL 222, TYPE 'B' WHEN REQUIRED BY PLANS. SEE PLANS FOR CURB LENGTHS AND ELEVATIONS.
6. FOR RETROFITS REPLACE CONCRETE TO NEAREST CONTROL JOINT OR AS DIRECTED BY AGENCY.
7. 2" ROLL CURB AND GUTTER PER DETAIL AS SHOWN.
8. CONTROL JOINT.
9. DETAIL 221 CURB AND GUTTER TRANSITION.

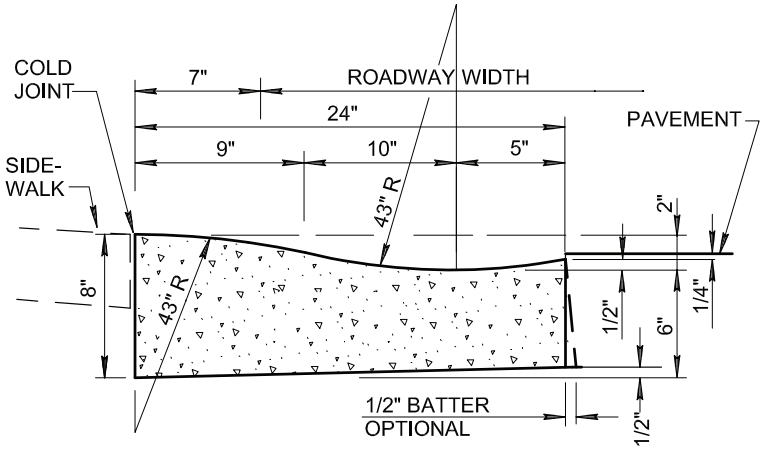

2" ROLL CURB AND GUTTER

DETAIL NO.					
260	MARICOPA ASSOCIATION of GOVERNMENTS	STANDARD DETAIL ENGLISH	RETROFIT DRIVEWAY OR ALLEY ENTRANCE (WITH 2" ROLL CURB AND GUTTER)	DRAFT 01–01–2018	DETAIL NO. 260

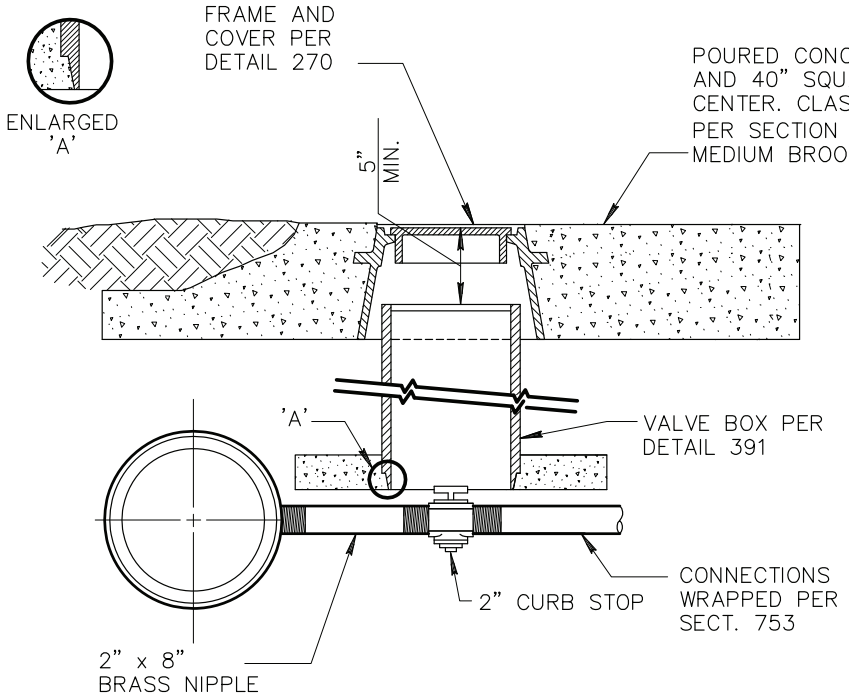

TYPE 'A'

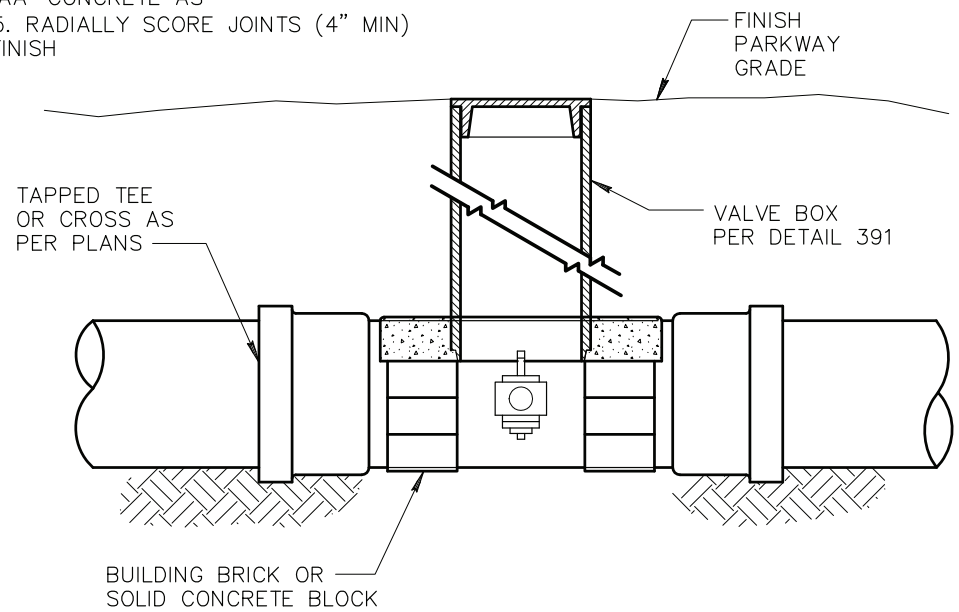

TYPE 'B'

NOTES:

1. CURB STOP TO BE MUELLER ORISEAL (H–10283), FORD BALL VALVE B11–777, HAYES BULLETIN 400, J. JONES (J–1900) OR APPROVED EQUAL.
2. REDUCER MAY BE USED WHEN CONNECTING TO SMALLER GALVANIZED PIPE.
3. THIS DETAIL IS TO BE USED WHEN CONNECTING EXISTING GALVANIZED PIPE TO ASBESTOS CEMENT PIPE OR CAST IRON PIPE.

NOTE:

1. VALVE BOX TO BE SUPPORTED ON BRICKS TO PREVENT VERTICAL LOADS FROM BEING TRANSMITTED TO THE SMALL PIPE.

DETAIL NO.				REVISED	DETAIL NO.
389	MARICOPA ASSOCIATION of GOVERNMENTS	STANDARD DETAIL ENGLISH	CURB STOP WITH VALVE BOX AND COVER	01–01–2001	389

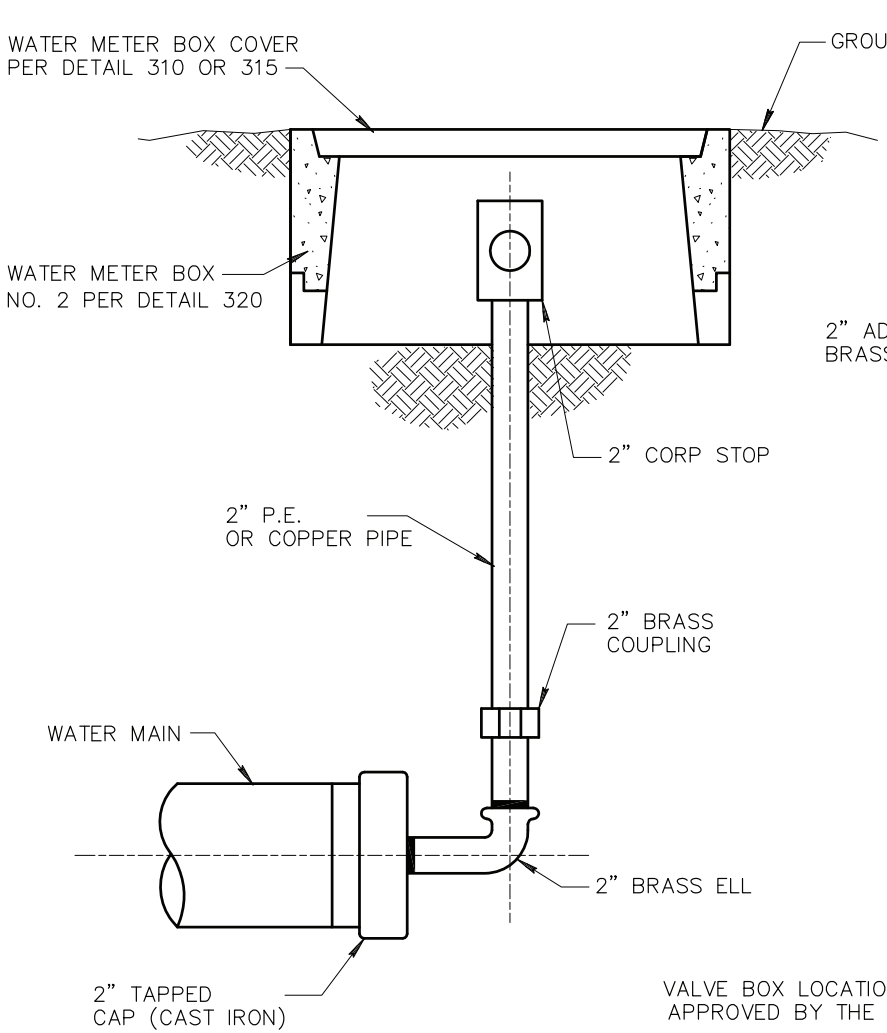

TYPE 'A'

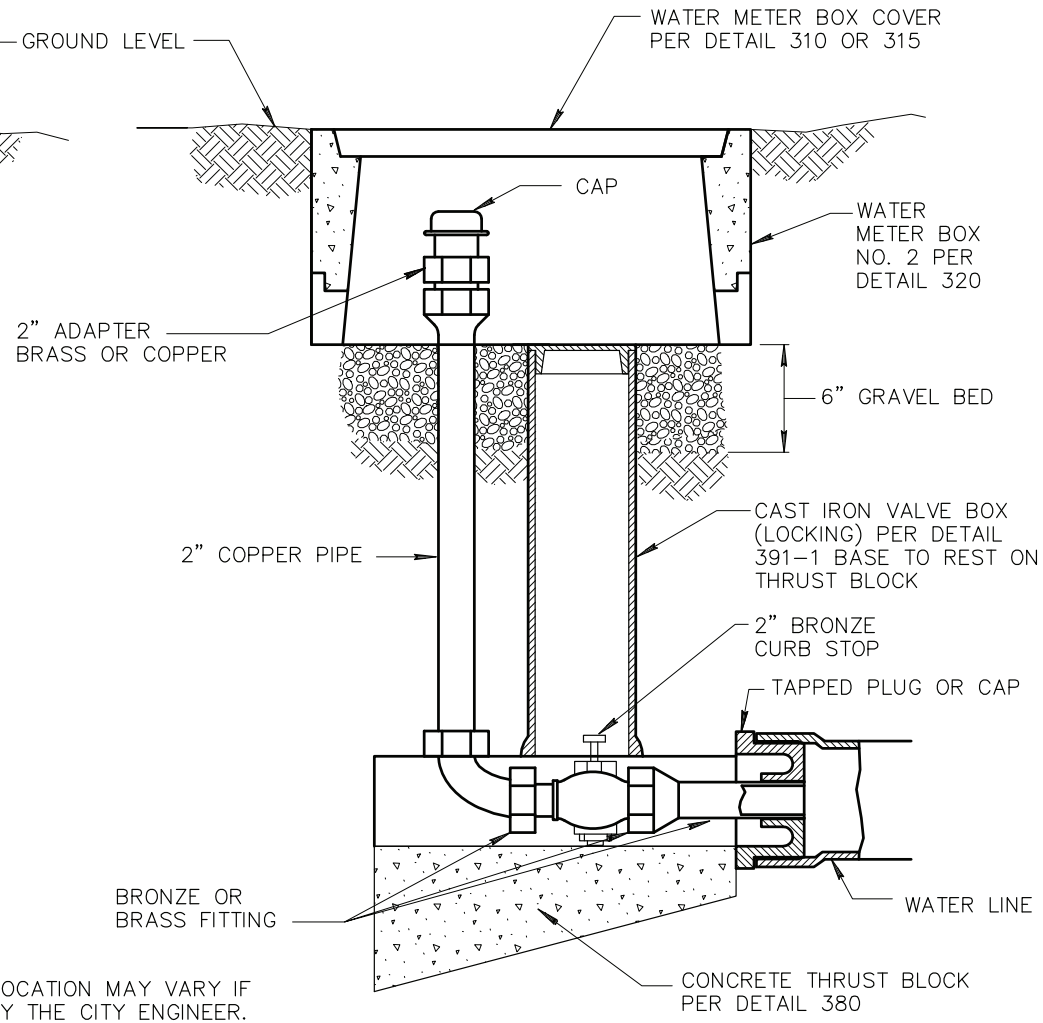

VALVE BOX LOCATION MAY VARY IF
APPROVED BY THE CITY ENGINEER.

TYPE 'B'

DETAIL NO.				REVISED	DETAIL NO.
390	MARICOPA ASSOCIATION of GOVERNMENTS	STANDARD DETAIL ENGLISH	CURB STOP WITH FLUSHING PIPE	01-01-2018	390

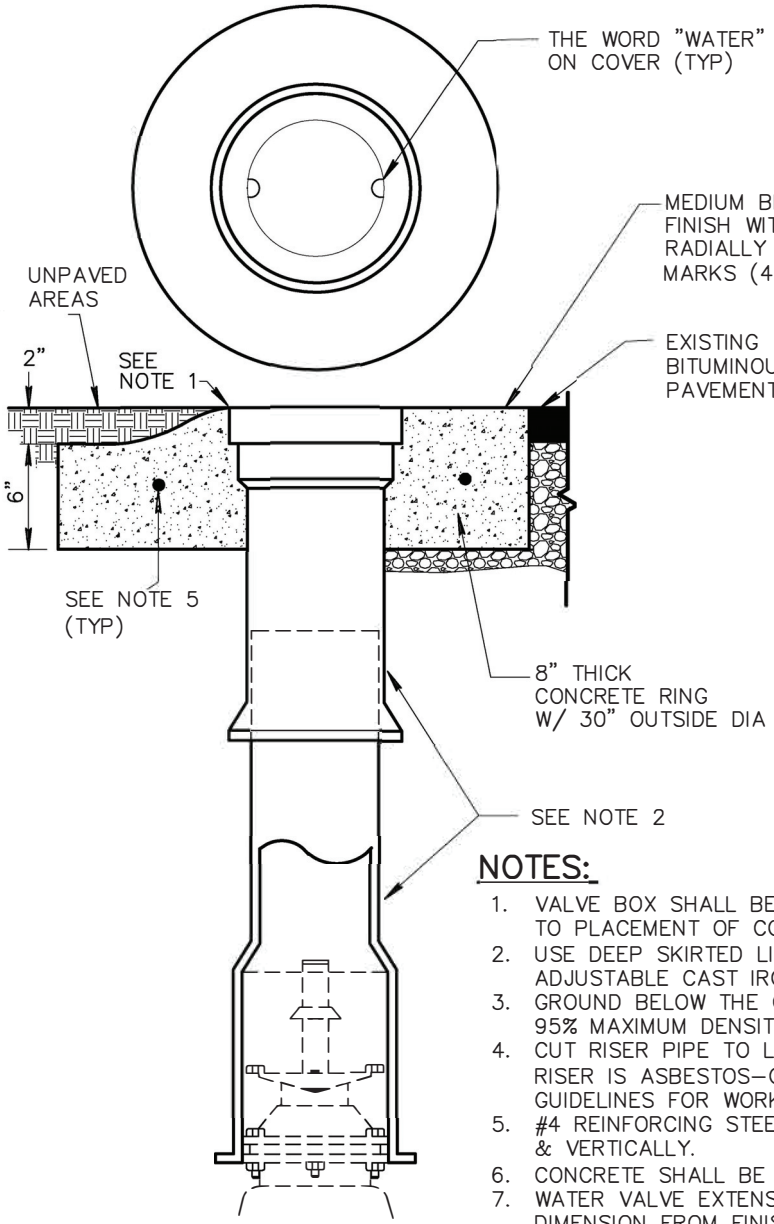

TYPE 'C'

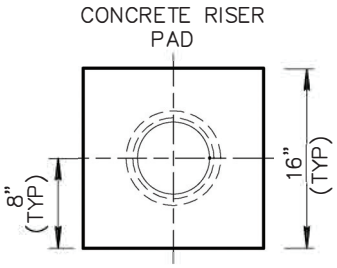

VIEW A–A

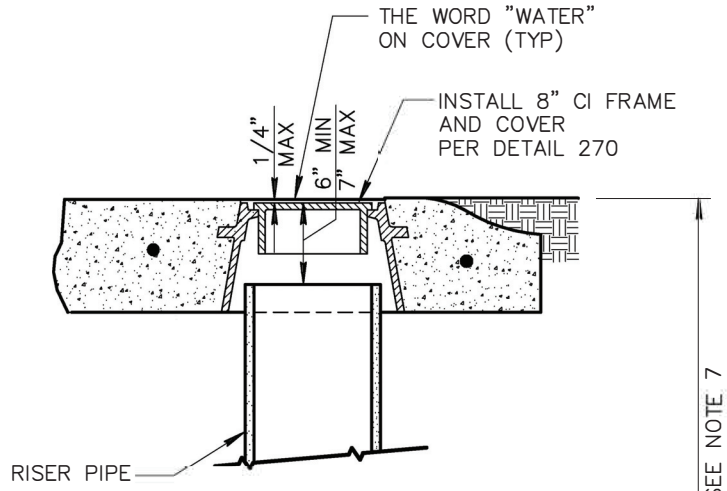

TYPE 'A'

(TO BE USED IN AREAS SUBJECT TO VEHICULAR TRAFFIC)

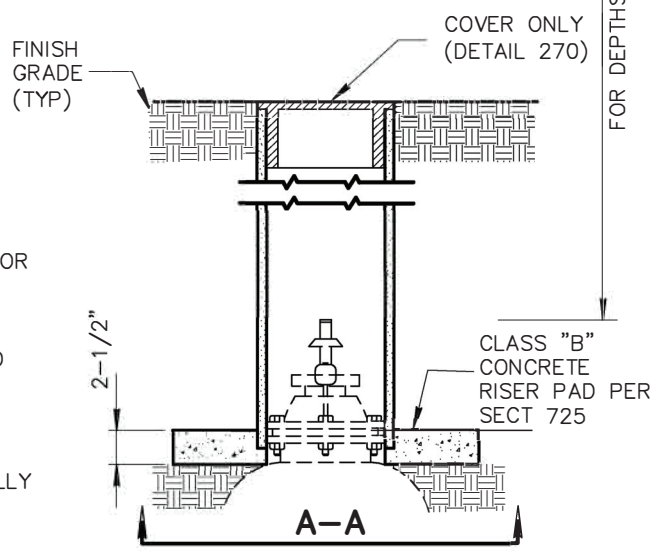

TYPE 'B'

(NOT SUBJECT TO VEHICULAR TRAFFIC)

NOTES:

1. VALVE BOX SHALL BE ADJUSTED TO THE FINISHED GRADE PRIOR TO PLACEMENT OF CONCRETE.
2. USE DEEP SKIRTED LID (4" OR MORE) TYPE, SLIDING ADJUSTABLE CAST IRON VALVE BOX C.I. MIN 30,000 P.S.I.
3. GROUND BELOW THE CONCRETE RISER PAD TO BE COMPACTED 95% MAXIMUM DENSITY.
4. CUT RISER PIPE TO LENGTH IN FIELD. **CAUTION:** IF EXISTING RISER IS ASBESTOS–CEMENT PIPE (ACP) FOLLOW OSHA GUIDELINES FOR WORKING WITH ACP.
5. #4 REINFORCING STEEL HOOP EQUALLY CENTERED HORIZONTALLY & VERTICALLY.
6. CONCRETE SHALL BE CLASS "AA" PER SECTION 725.
7. WATER VALVE EXTENSIONS SHALL BE INSTALLED WHEN THE DIMENSION FROM FINISH GRADE TO THE TOP OF THE OPERATING NUT EXCEEDS 5 FEET. SEE DETAIL 393 FOR VALVE EXTENSION.

DETAIL NO.				REVISED	DETAIL NO.
391–1	MARICOPA ASSOCIATION of GOVERNMENTS	STANDARD DETAIL ENGLISH	VALVE BOX INSTALLATION AND GRADE ADJUSTMENT	01–01–2018	391–1

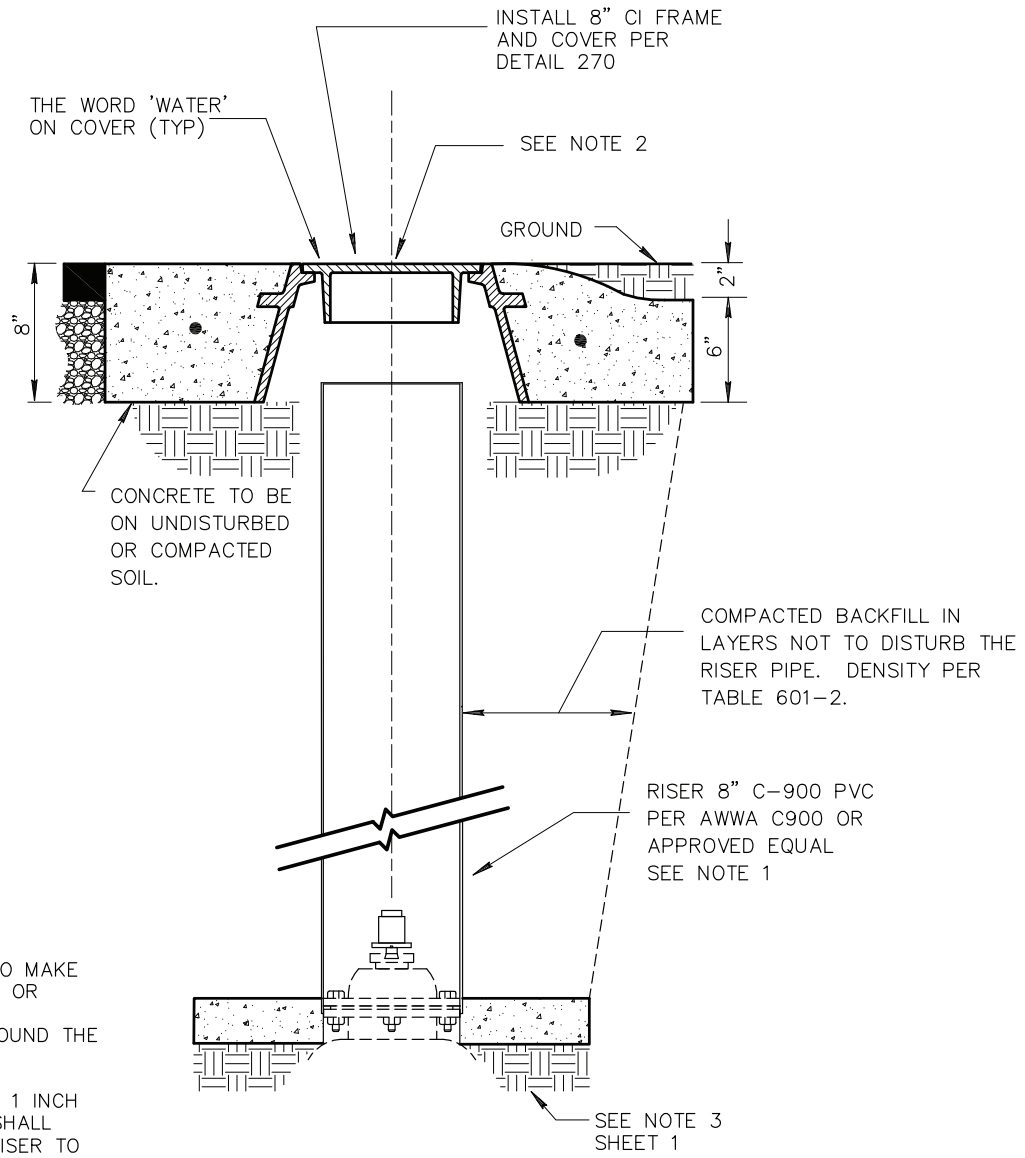

NOTES:

1. IF TWO OR MORE SECTIONS OF PIPE ARE USED TO MAKE THE VALVE BOX RISER, THEY SHALL BE COUPLED OR BONDED TO FORM DEBRIS-TIGHT JOINTS.
2. VALVE BOX SHALL BE PLUMB AND CENTERED AROUND THE OPERATING NUT.
3. THE TOP OF THE VALVE SHALL BE KEPT CLEAN.
4. THE TOP OF THE RISER SHALL BE A MINIMUM OF 1 INCH ABOVE UNDISTURBED OR COMPACTED SOIL AND SHALL HAVE A MINIMUM CLEARANCE OF 2" FROM THE RISER TO THE LID SKIRT.

DRAFT				REVISED	DETAIL NO.
391-2	MARICOPA ASSOCIATION of GOVERNMENTS	STANDARD DETAIL ENGLISH	VALVE BOX INSTALLATION AND GRADE ADJUSTMENT	01-01-2017	391-2

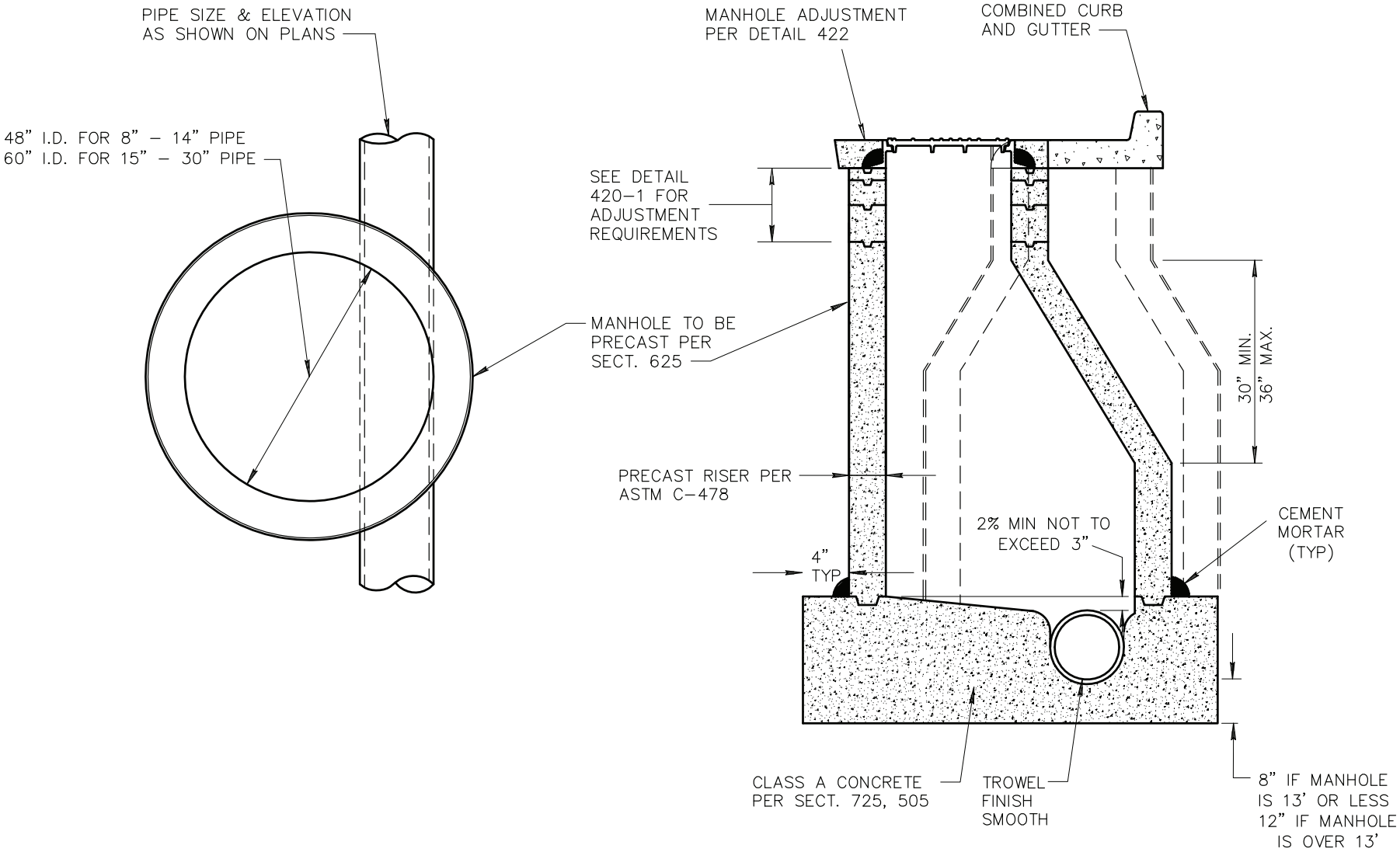

DETAIL NO.				REVISED	DETAIL NO.
421	MARICOPA ASSOCIATION of GOVERNMENTS	STANDARD DETAIL ENGLISH	OFFSET MANHOLE 8" TO 30" PIPE	01–01–2015	421

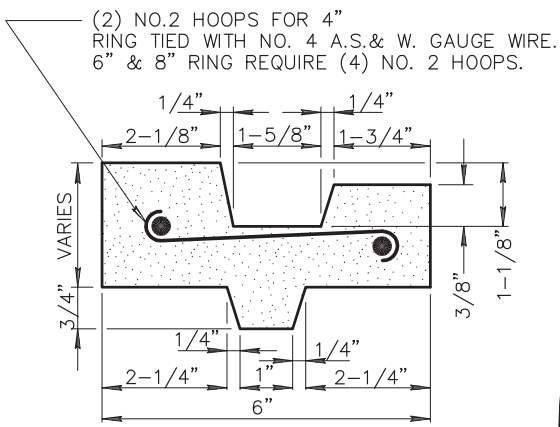

ADJUSTING RING DETAIL

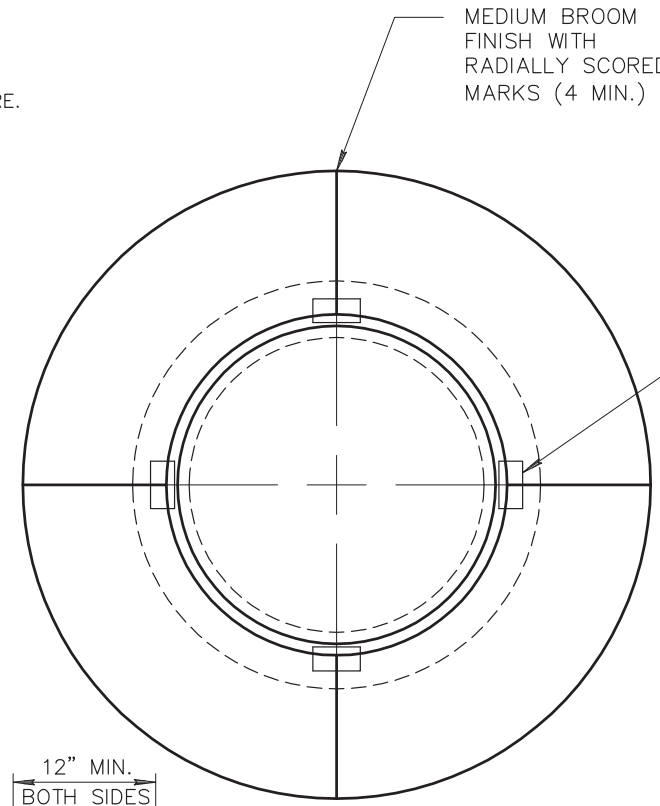

NOTES:

1. CONTRACTORS SHALL ADJUST ALL MANHOLE RINGS AND COVERS, INCLUDING MANHOLES OUTSIDE OF THE PAVEMENT.
2. ADJUSTMENT SHALL BE CONSTRUCTED PER MAG SECTION 345.
3. MANHOLE COATINGS PER AGENCY
4. GROUT SHALL BE USED BETWEEN FRAME AND ADJUSTING RING TO ACHIEVE WATER TIGHTNESS.

SPACER TYPE	REQUIRED THICKNESS
BRICK	GREATER THAN 2"
4"X2" STEEL SPACER	½" TO 2"
GROUT	LESS THAN ½"

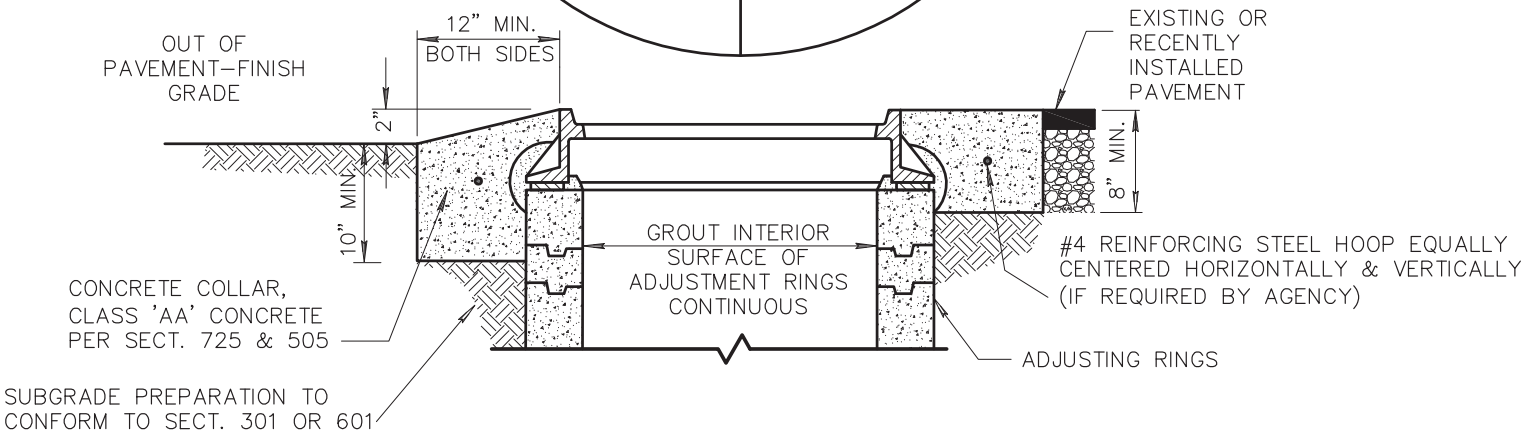

DETAIL NO.		STANDARD DETAIL		REVISED	DETAIL NO.
422	MARICOPA ASSOCIATION of GOVERNMENTS	ENGLISH	MANHOLE FRAME AND COVER ADJUSTMENT	01-01-2018	422

NOTE:
PAINT COVER BOTH SIDES
ONE PRIME COAT, TWO
FINISH COATS, SECT.
790, PAINT NO. 9

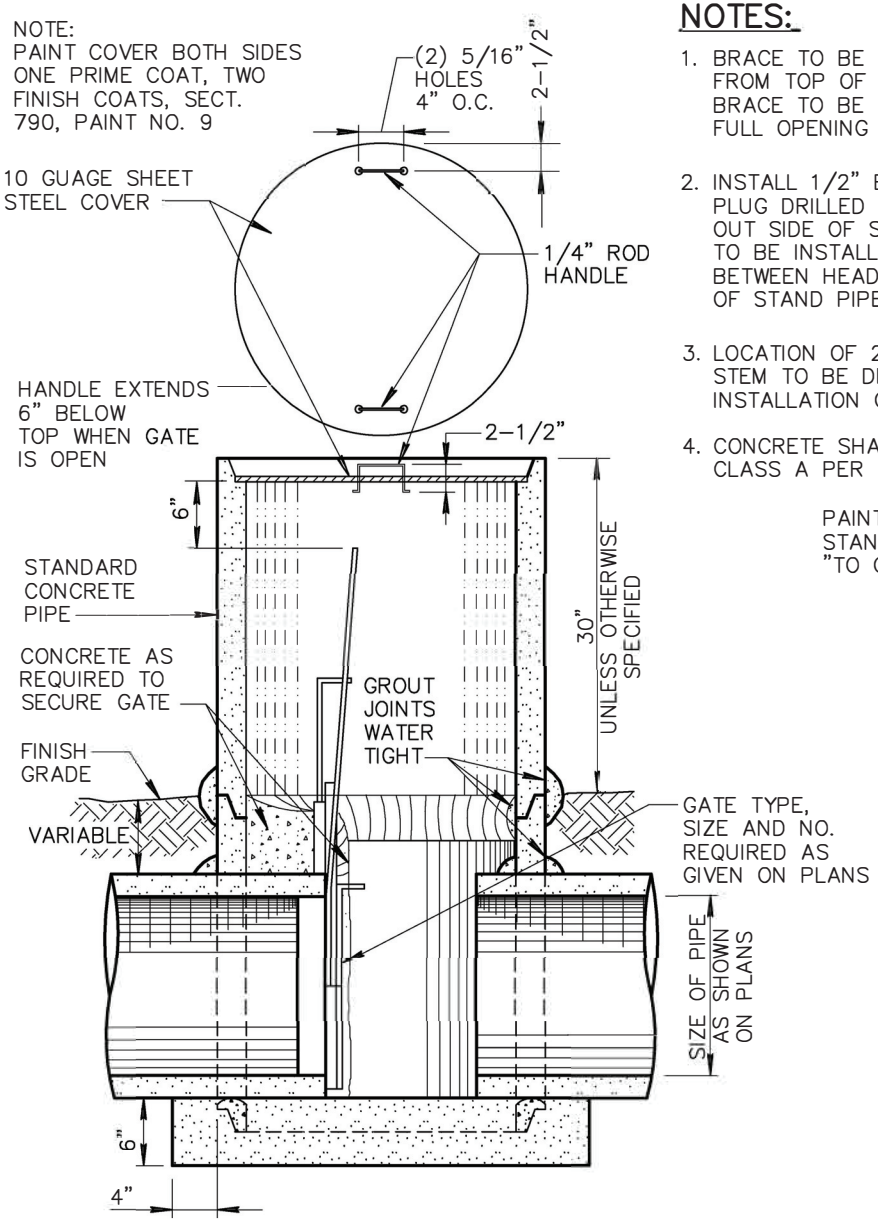

TYPE 'A'

NOTES:

1. BRACE TO BE INSTALLED EVERY 2' FROM TOP OF HEADGATE FRAME. BOTTOM BRACE TO BE HIGH ENOUGH TO ENABLE FULL OPENING OF HEADGATE.
2. INSTALL 1/2" BOLTS INTO LEAD PLUG DRILLED TO WITHIN 1" OF OUT SIDE OF STANDPIPE. SPACERS TO BE INSTALLED AT EACH BOLT BETWEEN HEADGATE FRAME AND INSIDE OF STAND PIPE.
3. LOCATION OF 2" HOLE FOR GATE STEM TO BE DETERMINED AFTER INSTALLATION OF GATE.
4. CONCRETE SHALL BE CLASS A PER SECT. 725.

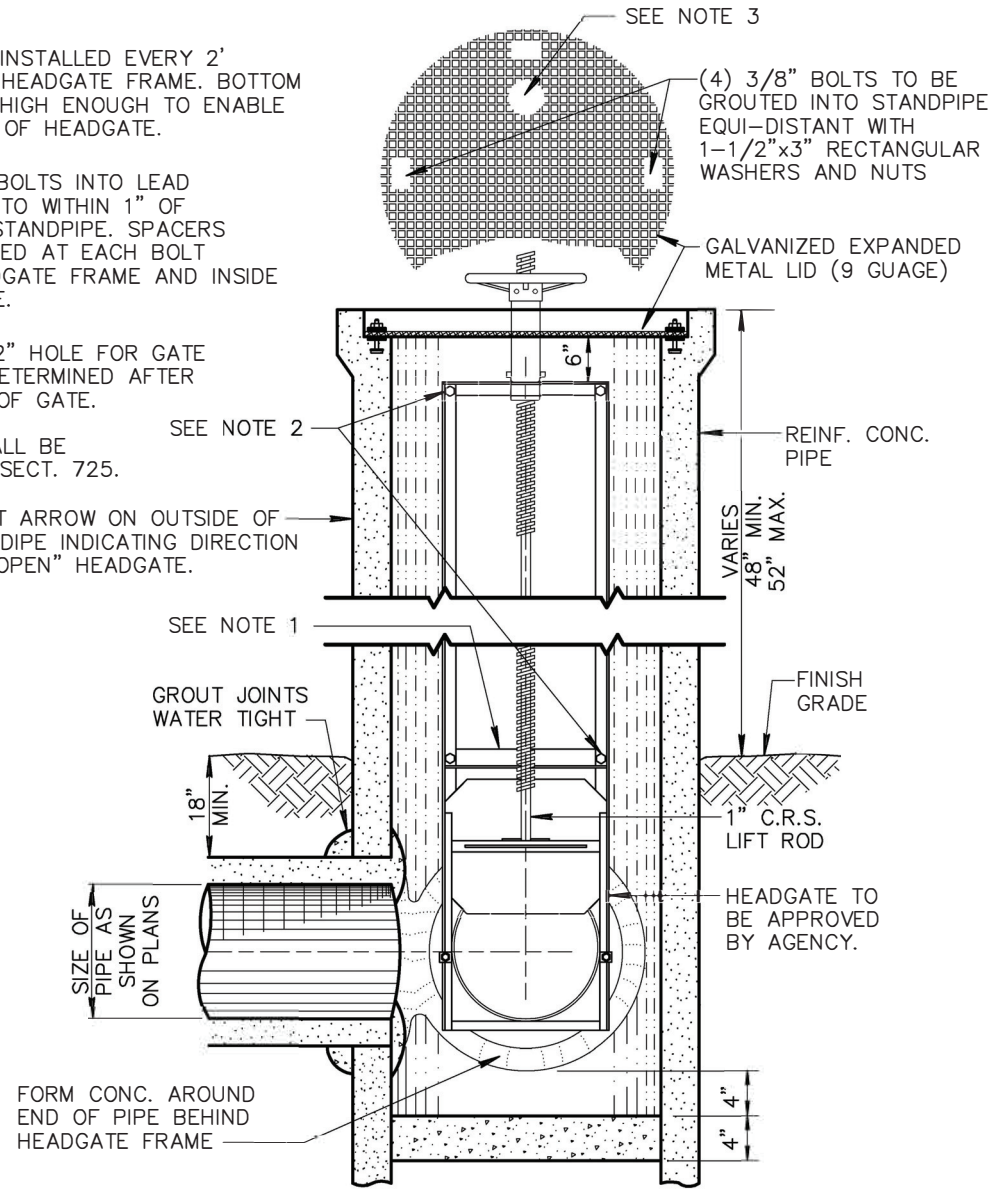

TYPE 'B'

DETAIL NO.				REVISED	DETAIL NO.
503	MARICOPA ASSOCIATION of GOVERNMENTS	STANDARD DETAIL ENGLISH	IRRIGATION STANDPIPE	01-01-2018	503

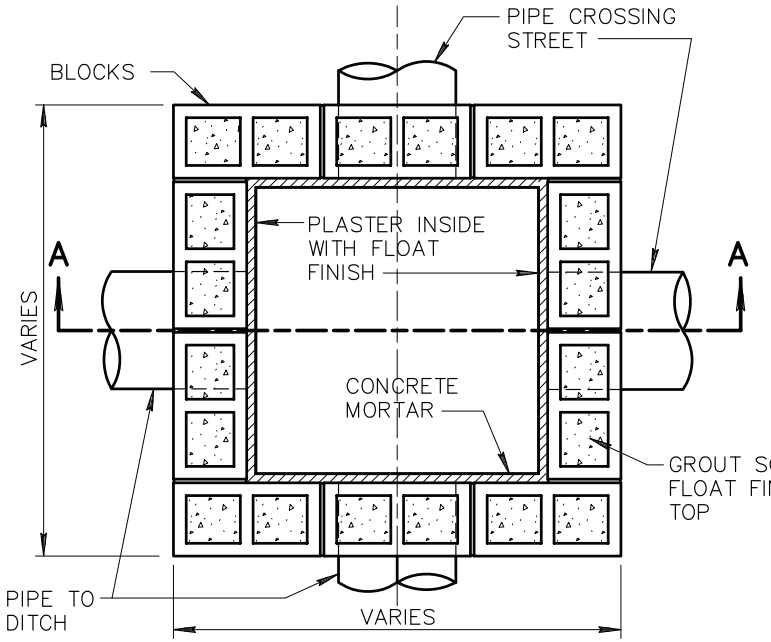

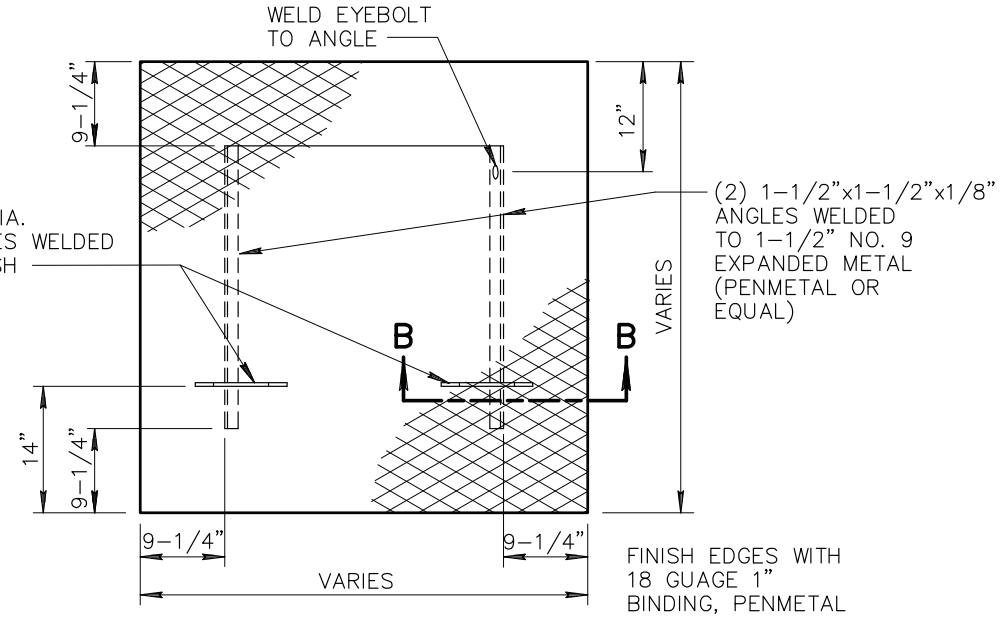

PLAN OF COVER

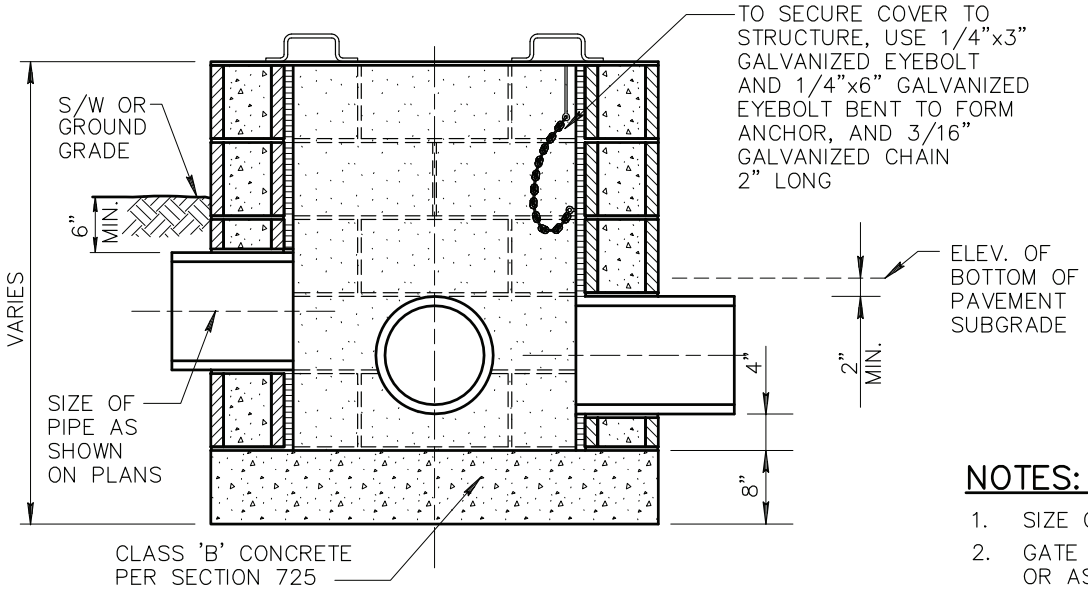

SECTION A–A

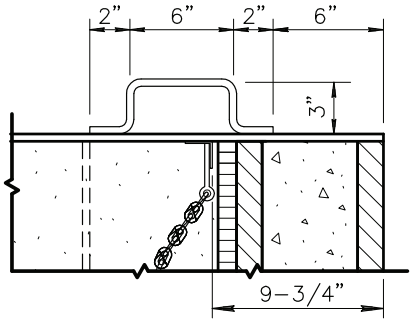

SECTION B–B

NOTES:

1. SIZE OF JUNCTION BOX TO BE DETERMINED BY THE ENGINEER.
2. GATE TYPE, SIZE AND NUMBER REQUIRED AS SHOWN ON PLANS OR AS SPECIFIED.
3. CONCRETE MASONRY UNITS (BLOCK) PER SECT. 510, 775 & 776

DETAIL NO.				REVISED	DETAIL NO.
504	MARICOPA ASSOCIATION of GOVERNMENTS	STANDARD DETAIL ENGLISH	CONCRETE BLOCK JUNCTION BOX	01-01-1998	504

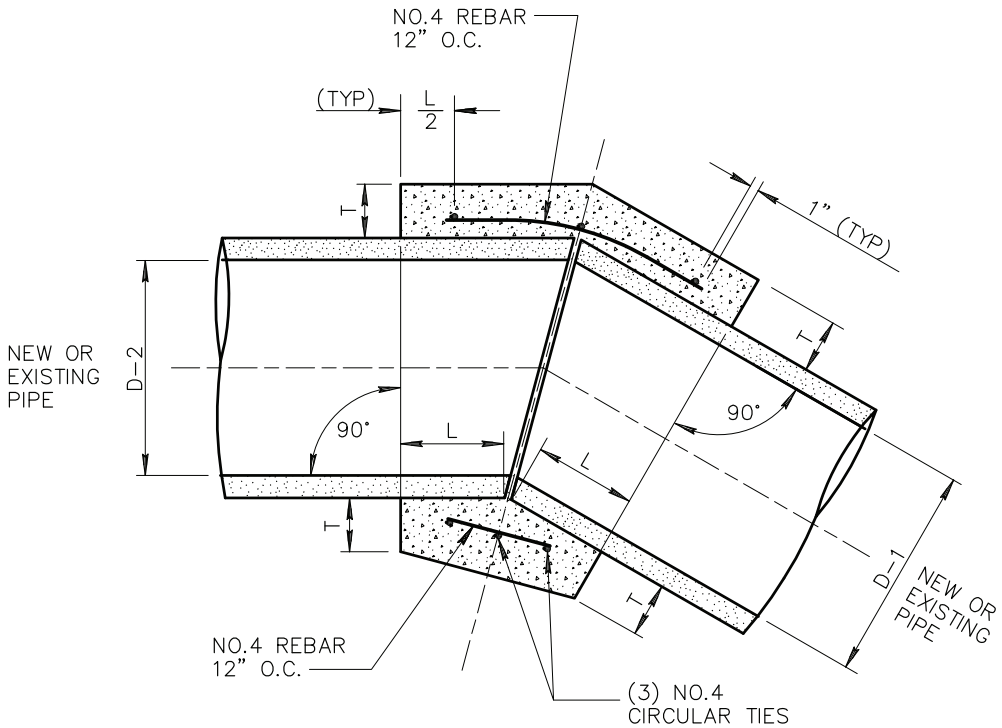

NOTES:

1. A CONCRETE COLLAR IS REQUIRED WHERE PIPES OF DIFFERENT DIAMETERS OR MATERIALS ARE JOINED, OR WHERE THE CHANGE IN ALIGNMENT OR GRADE EXCEEDS THAT ALLOWED FOR ON ORDINARY JOINTS.
2. WHERE PIPES OF DIFFERENT DIAMETERS ARE JOINED WITH A CONCRETE COLLAR, L AND T SHOULD BE THOSE OF THE LARGER PIPE. D=D−1, OR D−2 WHICHEVER IS GREATER.
3. OMIT REINFORCING ON PIPE 24" OR LESS IN DIAMETER.
4. WHERE REINFORCING IS REQUIRED, THE DIAMETER OF THE CIRCULAR TIES SHALL BE THE OUTSIDE DIAMETER OF PIPE+T.
5. FIELD CLOSURES OF PIPE OF THE SAME DIAMETER AND WITHOUT CHANGE IN GRADE OR ALIGNMENT SHALL BE MADE WITH A CONCRETE COLLAR.
6. CONCRETE SHALL BE CLASS B PER SECT. 725.
7. ALL REBAR SHALL HAVE 3" MINIMUM CLEAR COVER.
8. PIPE ENDS TO BE TRIMMED SUCH THAT THE MAXIMUM DISTANCE BETWEEN PIPES AT ANY POINT IS 2".
9. AN ENGINEER APPROVED WATER STOP IS REQUIRED ON ALL PIPES EXCEPT CONCRETE PIPE.

TABLE

D	L	T
18"	1.0'	5"
24"	1.0'	6"
36"	1.5'	8"
57"	1.5'	10"
66"	1.75'	11"

FOR PIPE SIZES NOT LISTED AND LESS THAN 66" USE THE NEXT SIZE LARGER.

DETAIL NO.				DRAFT	DETAIL NO.
505	MARICOPA ASSOCIATION of GOVERNMENTS	STANDARD DETAIL ENGLISH	CONCRETE COLLAR FOR PIPE	01-01-2018	505

NOTE:
CONTRACTOR MAY USE PRECUT FITTINGS IF DESIRED.
BID ITEM INCLUDES LATERAL PIPE, RISER, PAD, VALVE, LABOR AND INCIDENTAL MATERIAL REQUIRED FOR INSTALLATION.

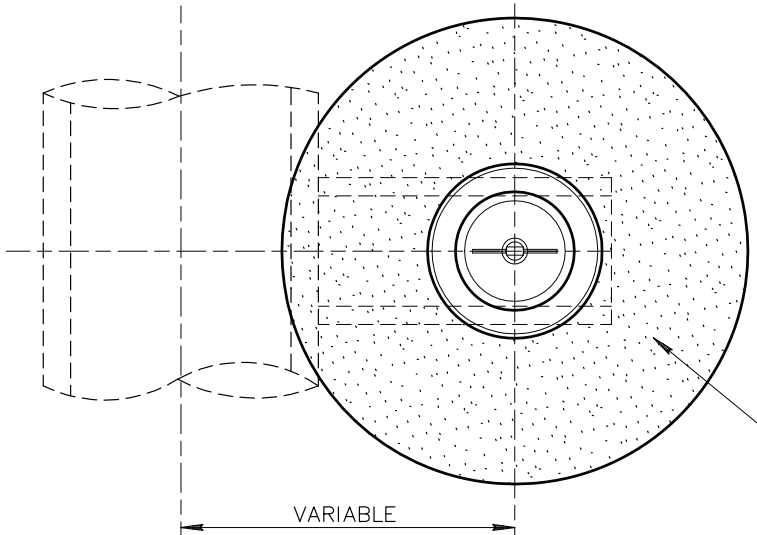

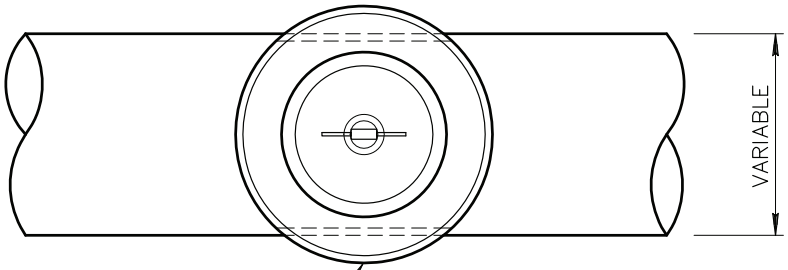

CONSTRUCT OPTIONAL CONCRETE SCOURING BASIN AROUND VALVE ASSEMBLY WHERE SPECIFIED

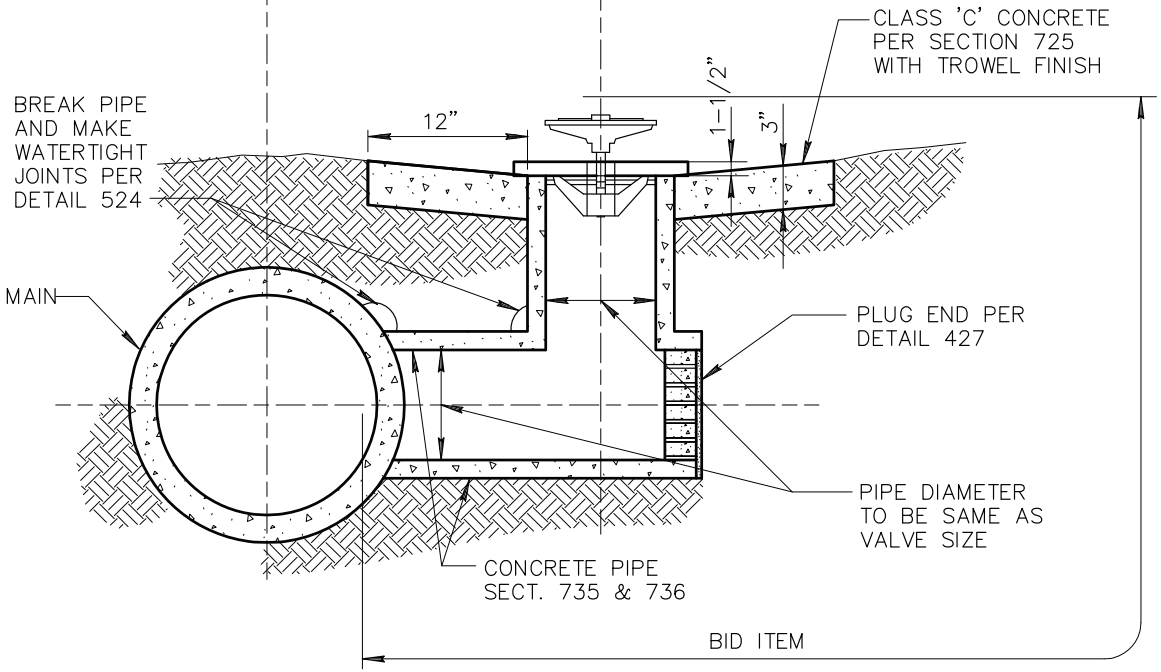

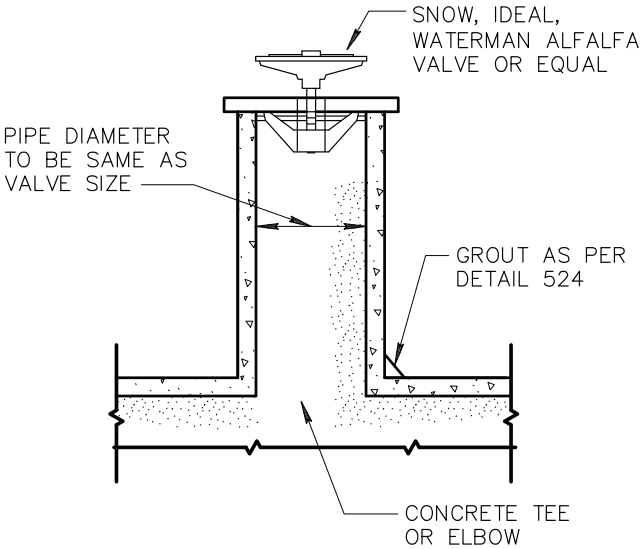

DETAIL NO.				REVISED	DETAIL NO.
506	MARICOPA ASSOCIATION of GOVERNMENTS	STANDARD DETAIL ENGLISH	IRRIGATION VALVE INSTALLATION	01-01-1998	506