SEE Phx detail P1241.3 for discussion

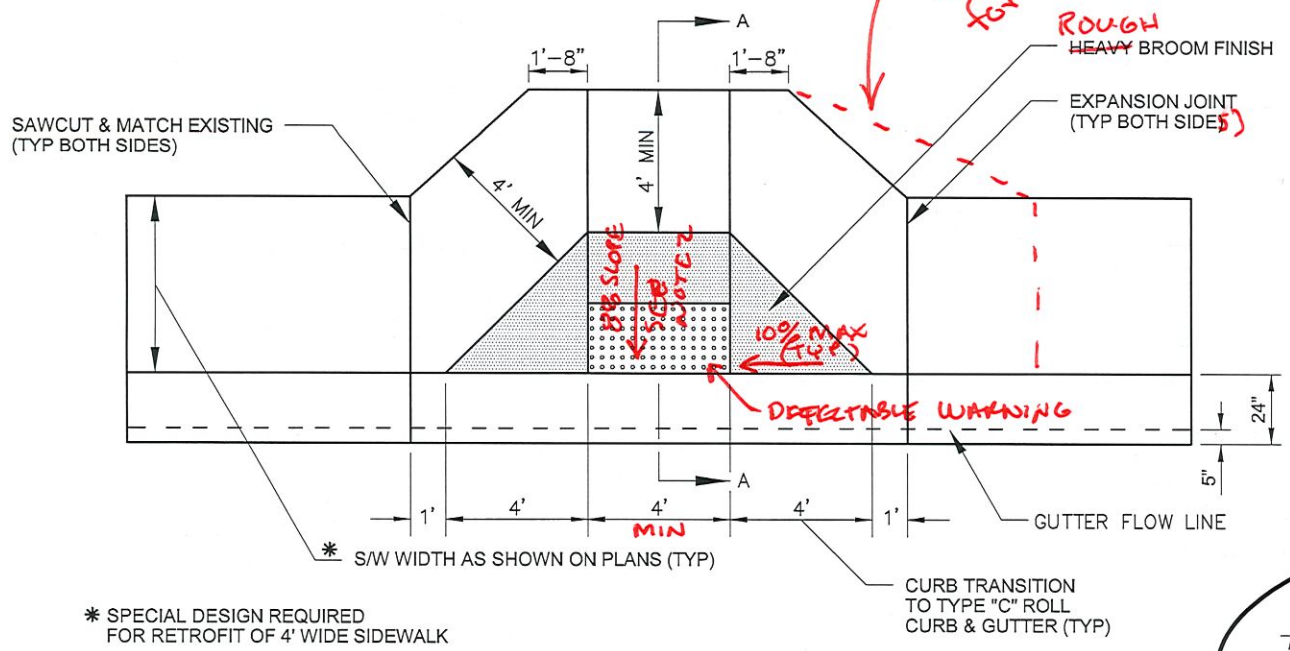

* SPECIAL DESIGN REQUIRED
FOR RETROFIT OF 4' WIDE SIDEWALK

NOTES:

1. CLASS 'B' CONCRETE PER SECTION 725.
2. CONSTRUCTION INCLUDING JOINTS, CONCRETE FINISH AND MAXIMUM SLOPES SHALL CONFORM TO SECTION 340.
3. SIDEWALK SURFACE TO MATCH 1.5 % SLOPE FROM TOP OF CURB.
4. DETECTABLE WARNING IS TO COMPLY WITH THE JURISDICTIONAL AGENCY'S REQUIREMENTS.

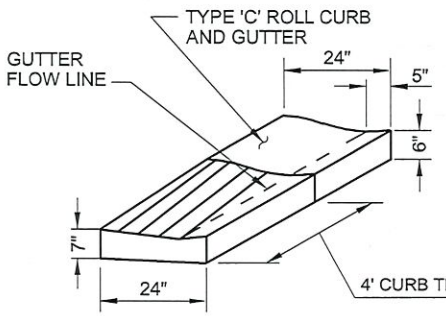

CURB TRANSITION

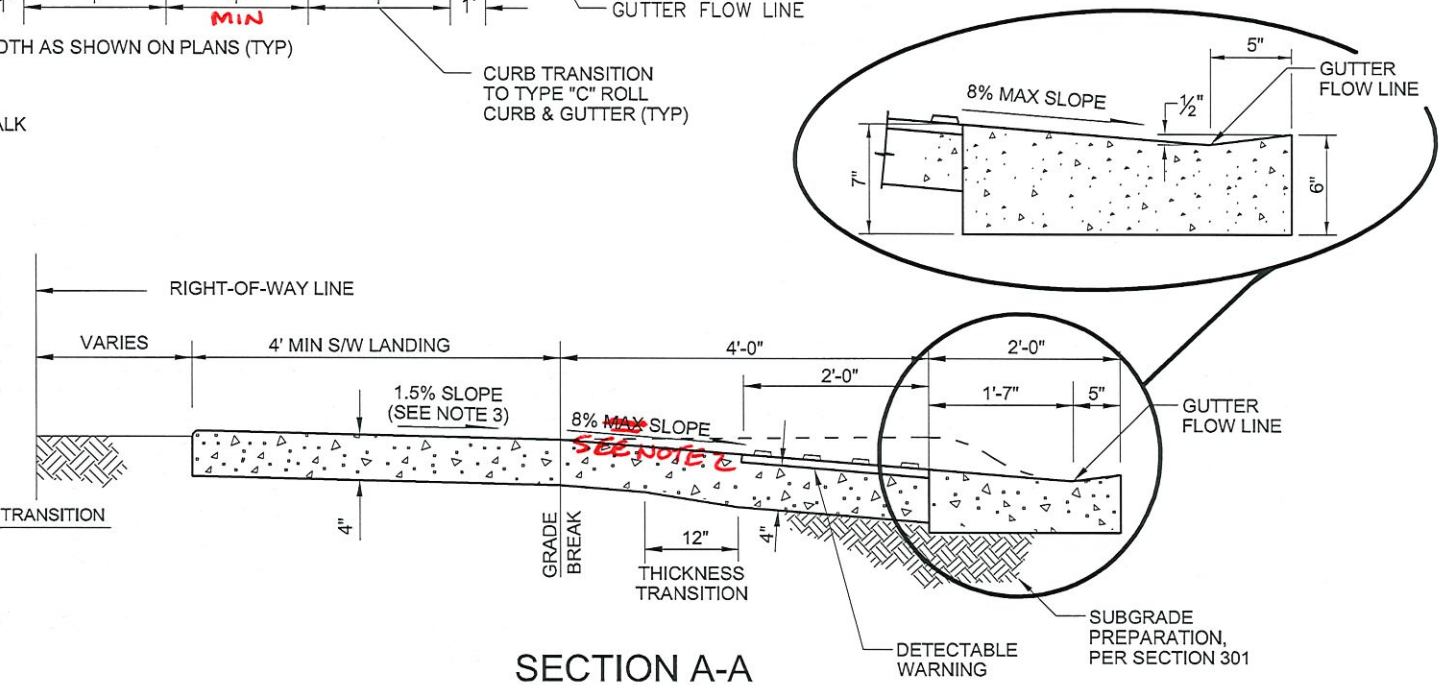

SECTION A-A

DETAIL NO.				DRAFT	DETAIL NO.
238-4	MARICOPA ASSOCIATION of GOVERNMENTS	STANDARD DETAIL ENGLISH	SINGLE CURB RAMP MID-BLOCK RESIDENTIAL STREET W/ 4" ROLL CURB	03-26-2019	238-4