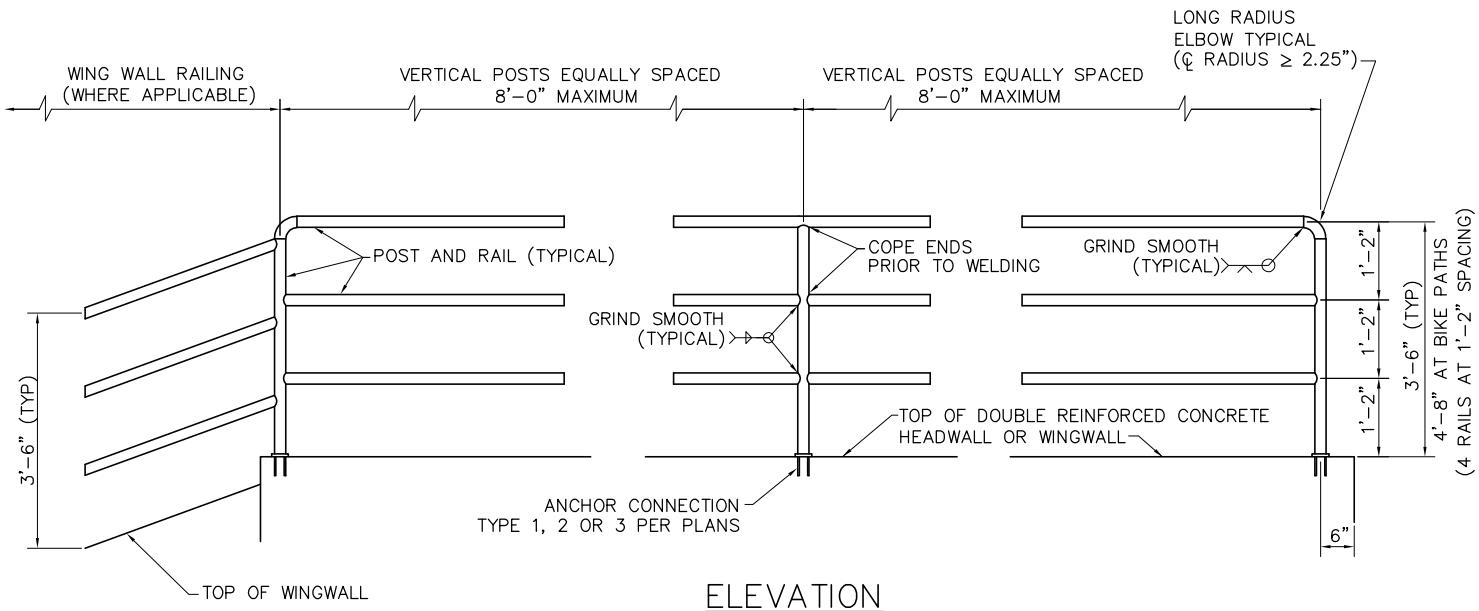

ELEVATION

NOTES:

1. POSTS AND RAILS SHALL BE 1.90 INCH OUTSIDE DIAMETER, HIGH STRENGTH HEAVY INDUSTRIAL STEEL PIPE CONFORMING TO ASTM F1043 MATERIAL GROUP IA–2 (2.72 LB/FT, MINIMUM YIELD STRENGTH=50 KSI) OR MATERIAL GROUP IC GALVANIZED AFTER FORMING (2.28 LB/FT, MINIMUM YIELD STRENGTH=50 KSI)
2. PAINT RAIL PER MAG SPECIFICATIONS SECTION 530 WHEN REQUIRED BY PLANS, SHOP PRIME WITH RUST INHIBITING PRIMER (FIELD REPAIR PRIMER AS NEEDED). COLOR PER PLANS.
3. VERTICAL POSTS TO BE EVENLY SPACED.
4. REMOVE ALL SHARP EDGES.
5. INSTALL SAFETY RAIL AS REQUIRED BY PLANS OR SPECIFICATIONS.
6. THE EMBEDMENT FOR ANCHOR TYPES 1, 2, AND 3 SHALL BE LOCATED INSIDE THE WALL REINFORCEMENT CAGE.
7. SAFETY RAIL IS NOT TO BE USED AS A PEDESTRIAN BRIDGE RAIL.
8. FOR SAFETY RAIL ON 8" BLOCK (CMU) WALLS, THE TOP COURSE SHALL BE A BOND BEAM WITH 2–#4 LONGITUDINAL REBAR AND GROUT.

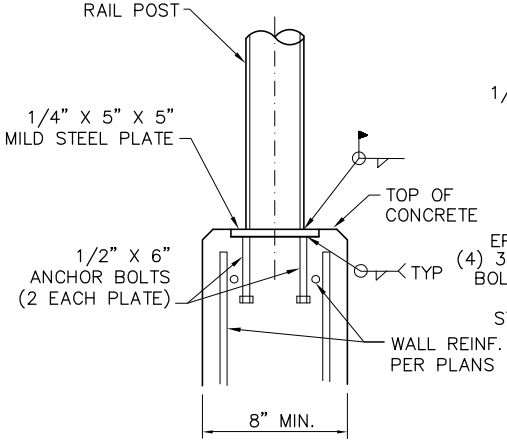

TYPE 1

ANCHOR PLATE DETAIL

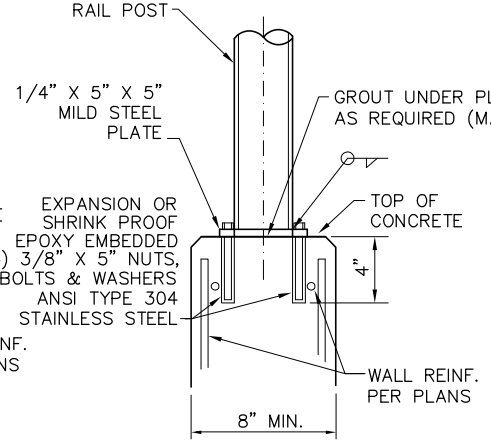

TYPE 2

EXPANSION BOLT DETAIL

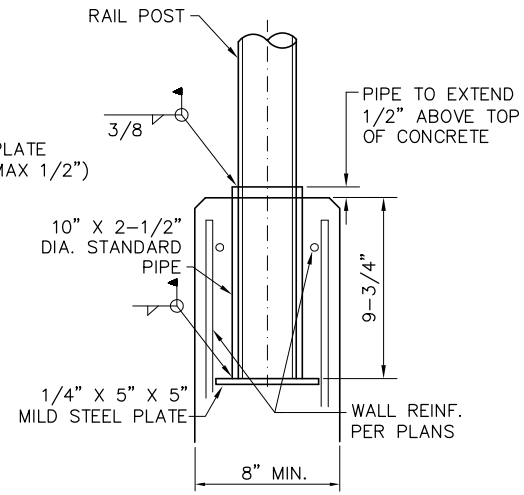

TYPE 3

PIPE SLEEVE DETAIL

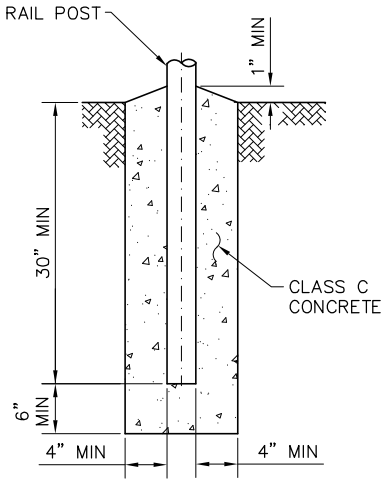

TYPE 4

GROUND INSTALLATION DETAIL

NOTE: SEE PLANS FOR ANCHORAGE DETAILS FOR ATTACHMENT TO SINGULARLY REINFORCED AND NON–REINFORCED WALLS.

DETAIL NO.					
145	MARICOPA ASSOCIATION of GOVERNMENTS	STANDARD DETAIL ENGLISH	**SAFETY RAIL**	REVISED DRAFT 02–07–2019	DETAIL NO. 145

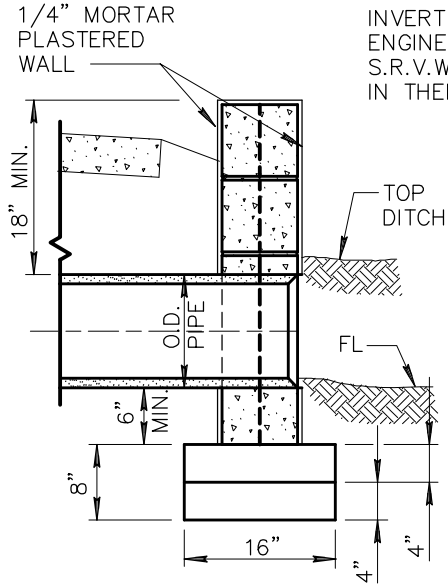

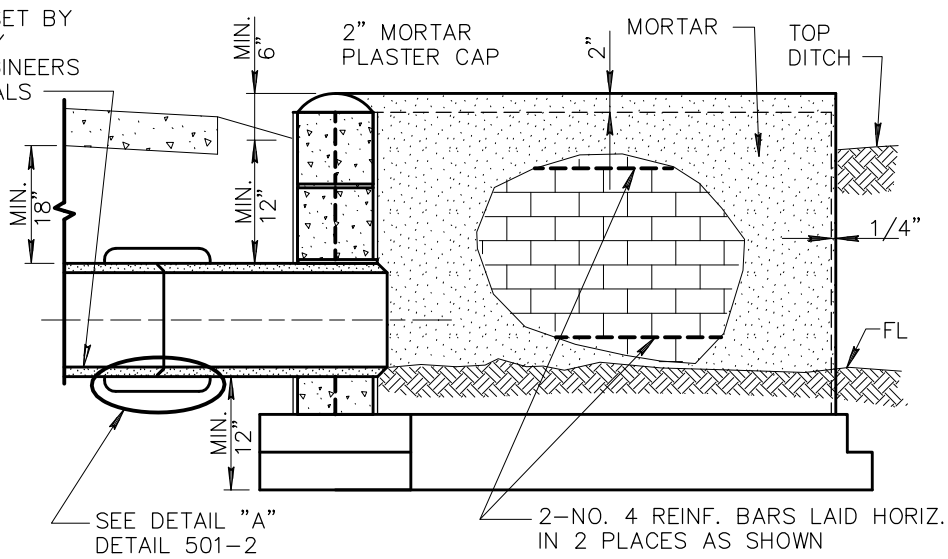

SECTION B-B

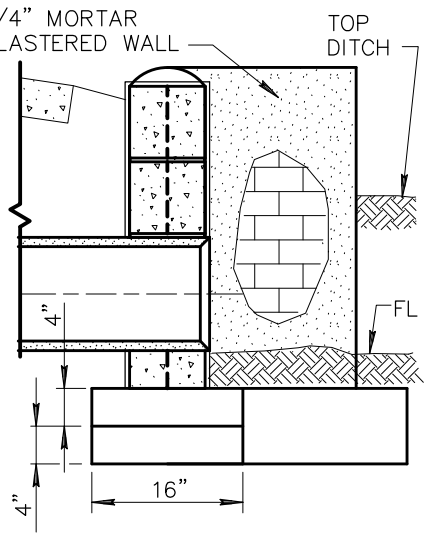

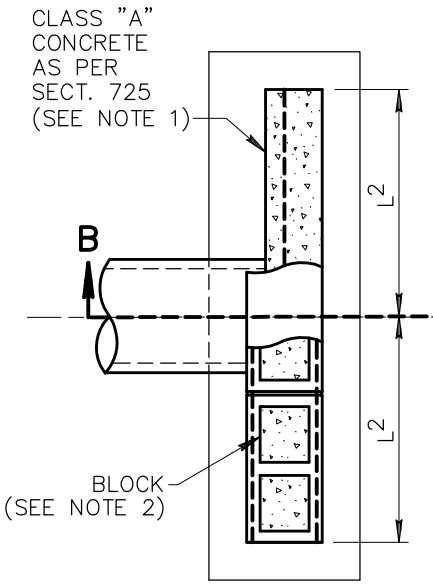

STRAIGHT TYPE

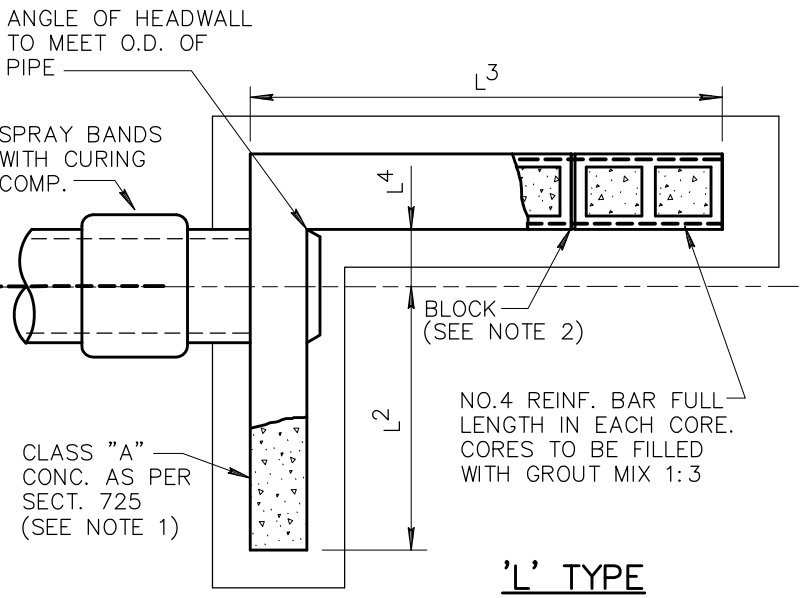

'L' TYPE

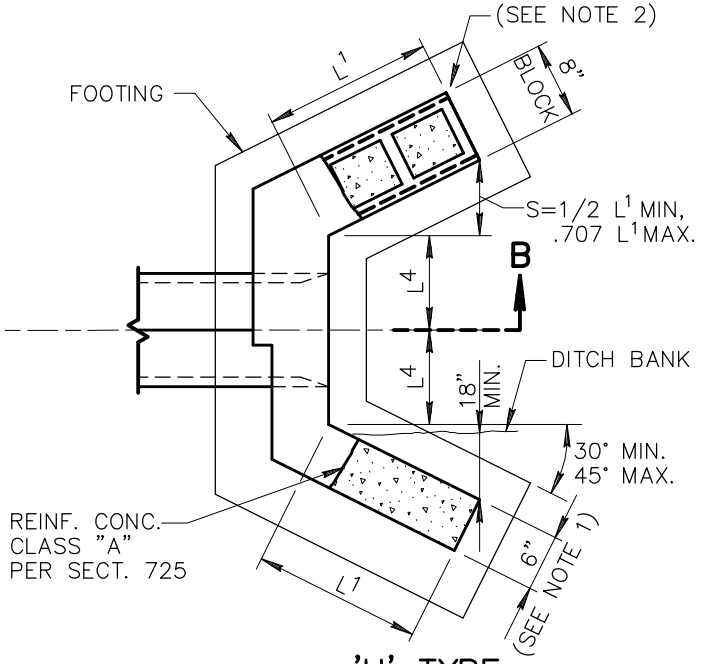

'U' TYPE

PLAN

NOTES:

1. FOR WALLS REQUIRING SAFETY RAIL, MIN. WALL THICKNESS IS 8". SEE DETAIL 145 FOR ADDITIONAL REQUIREMENTS.
2. FOR BLOCK WALLS REQUIRING SAFETY RAIL, SEE DETAIL 145, NOTE 8.

DETAIL NO.			REVISED	DETAIL NO.
501-1	MARICOPA ASSOCIATION of GOVERNMENTS — STANDARD DETAIL ENGLISH	HEADWALL	DRAFT 09-19-2018	501-1

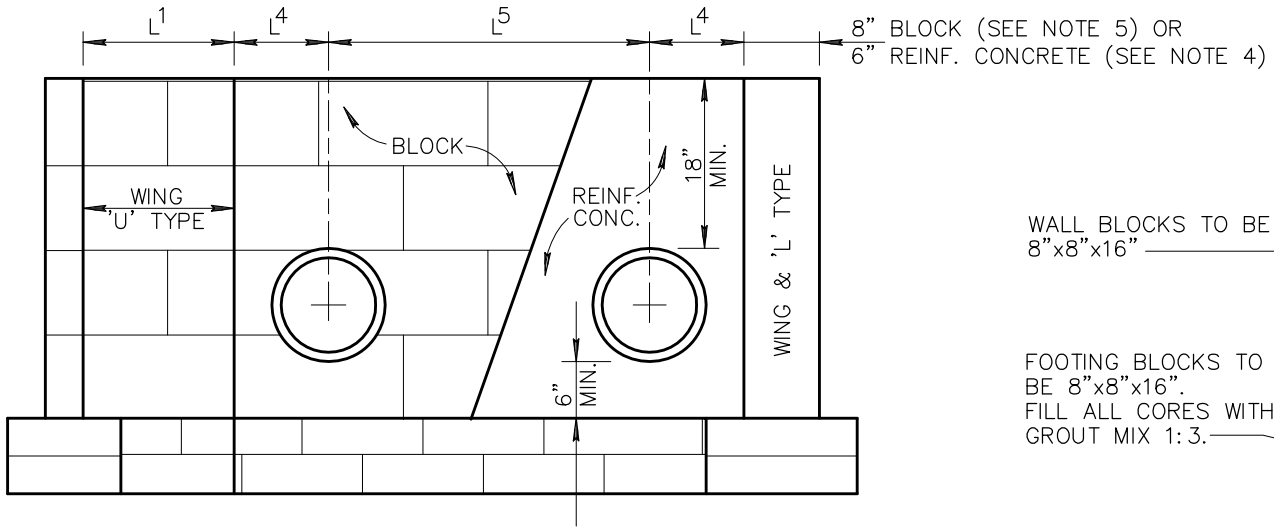

DOUBLE PIPE HEADWALL

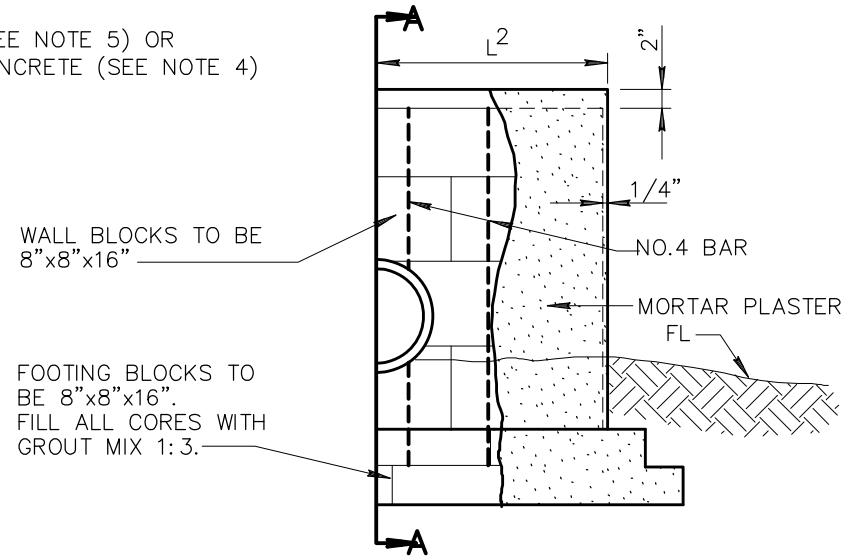

ELEVATION

CONCRETE MASONRY UNITS (BLOCK) HEADWALLS JOINED WITH CEMENT MORTAR PLASTERED BOTH SIDES OF WALL FULL HEIGHT AND SHALL BE CURED PER SECT. 726.

NOTES:

1. ALL CONCRETE SHALL BE CLASS 'A' PER SECTION 505 AND 725.
2. CONCRETE MASONRY UNITS (BLOCK) PER SECTIONS 510, 775 AND 776.
3. CONCRETE REINFORCEMENT SHALL BE NO.4 BAR 12" O.C. BOTH WAYS.
4. FOR WALLS REQUIRING SAFETY RAIL, MIN. WALL THICKNESS IS 8". SEE DETAIL 145 FOR ADDITIONAL REQUIREMENTS.
5. FOR BLOCK WALLS REQUIRING SAFETY RAIL, SEE DETAIL 145, NOTE 8.

HEADWALL DIMENSIONS

*NOMINAL PIPE SIZE	L^1	L^2	L^3	L^4	L^5
12"	1'-4"	2'-0"	3'-8"	0'-10"	2'-10"
15"	2'-0"	2'-8"	4'-0"	1'-0"	3'-0"
18"	2'-0"	3'-8"	4'-8"	1'-2"	3'-4"
21"	2'-8"	4'-0"	5'-4"	1'-3"	3'-8"
24"	2'-8"	4'-0"	5'-4"	1'-6"	3'-11"
30"	2'-8"	5'-4"	6'-8"	1'-10"	4'-7"
36"	3'-4"	6'-8"	8'-0"	1'-10"	5'-2"
42"	4'-0"	8'-0"	9-4"	2'-2"	5'-9"

* NOMINAL PIPE SIZE GIVEN FOR REINFORCED CONC. PIPE.

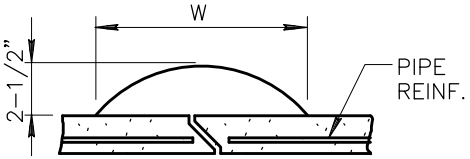

PIPE SIZE	W
12" – 21" INCL.	11"
24" – 42" INCL.	13"

DETAIL "A"

DETAIL NO.				REVISED	DETAIL NO.
501-2	MARICOPA ASSOCIATION of GOVERNMENTS STANDARD DETAIL ENGLISH	HEADWALL		DRAFT 09-19-2018	501-2

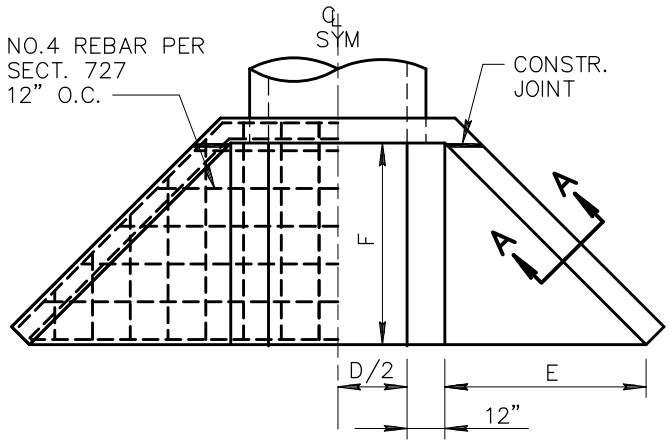

INLET HEADWALL

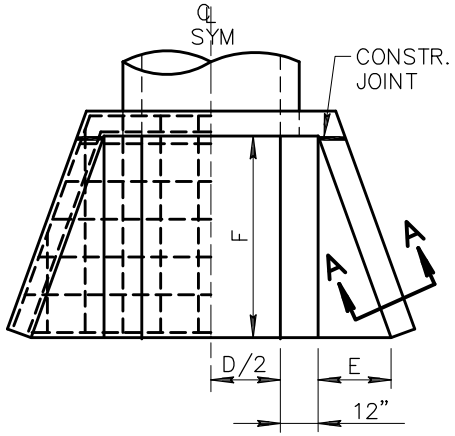

OUTLET HEADWALL

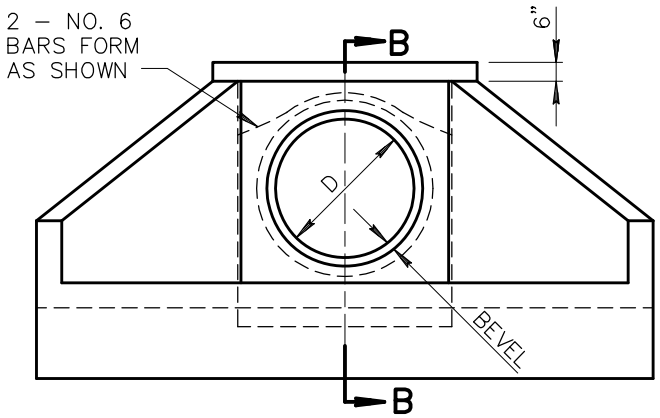

INLET HEADWALL FACE ELEVATION
OUTLET SIMILAR

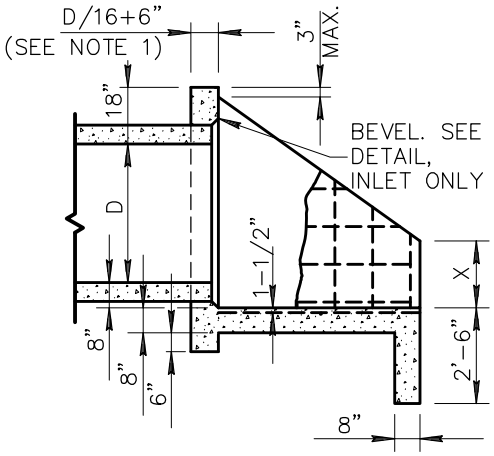

SECTION B–B

NOTES:

1. FOR WALLS REQUIRING SAFETY RAIL, MIN. WALL THICKNESS IS 8". SEE DETAIL 145 FOR ADDITIONAL REQUIREMENTS.

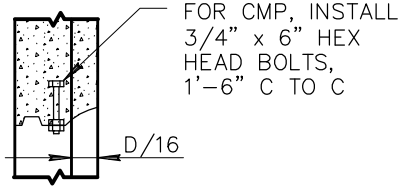

CMP BEVEL DETAIL

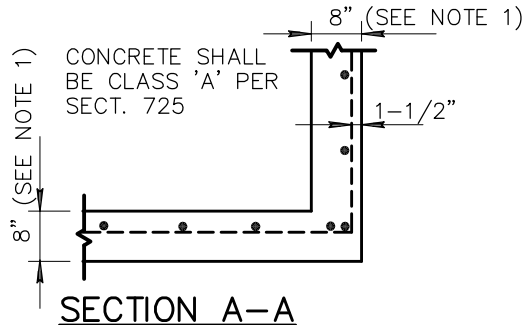

SECTION A–A

1:1 1/2 EMBANKMENT SLOPE				
D	TYPE *	DIMENSIONS		
		F	E	X
42"	1 (IN)	5'-2"	5'-2"	1'-9"
	2 (OUT)	5'-2"	1'-11"	1'-9"
48"	3 (IN)	5'-8"	5'-8"	1'-11"
	4 (OUT)	5'-8"	2'-1"	1'-11"
54"	5 (IN)	6'-2"	6'-2"	2'-1"
	6 (OUT)	6'-2"	2'-3"	2'-1"
60"	7 (IN)	6'-8"	6'-8"	2'-3"
	8 (OUT)	6'-8"	2'-5"	2'-3"
66"	9 (IN)	7'-2"	7'-2"	2'-5"
	10 (OUT)	7'-2"	2'-7"	2'-5"
72"	11 (IN)	7'-8"	7'-8"	2'-7"
	12 (OUT)	7'-8"	2'-9"	2'-7"
78"	13 (IN)	8'-2"	8'-2"	2'-9"
	14 (OUT)	8'-2"	3'-0"	2'-9"
84"	15 (IN)	8'-8"	8'-8"	2'-11"
	16 (OUT)	8'-8"	3'-2"	2'-11"

1:4 EMBANKMENT SLOPE				
D	TYPE *	DIMENSIONS		
		F	E	X
42"	17 (IN)	8'-8"	8'-8"	3'-0"
	18 (OUT)	8'-8"	3'-2"	3'-0"
48"	19 (IN)	8'-8"	8'-8"	3'-6"
	20 (OUT)	8'-8"	3'-2"	3'-6"
54"	21 (IN)	8'-8"	8'-8"	4'-0"
	22 (OUT)	8'-8"	3'-2"	4'-0"
60"	23 (IN)	9'-4"	9'-4"	4'-4"
	24 (OUT)	9'-4"	3'-5"	4'-4"
66"	25 (IN)	9'-8"	9'-8"	4'-9"
	26 (OUT)	9'-8"	3'-6"	4'-9"
72"	27 (IN)	9'-8"	9'-8"	5'-3"
	28 (OUT)	9'-8"	3'-6"	5'-3"
78"	29 (IN)	10'-0"	10'-0"	5'-8"
	30 (OUT)	10'-0"	3'-8"	5'-8"
84"	31 (IN)	10'-8"	10'-8"	6'-0"
	32 (OUT)	10'-8"	3'-11"	6'-0"

* (IN) REFERS TO INLET
(OUT) REFERS TO OUTLET

DETAIL NO.				REVISED DRAFT	DETAIL NO.
501-3	MARICOPA ASSOCIATION of GOVERNMENTS	STANDARD DETAIL ENGLISH	HEADWALL 42" TO 84" PIPE	09-19-2018	501-3

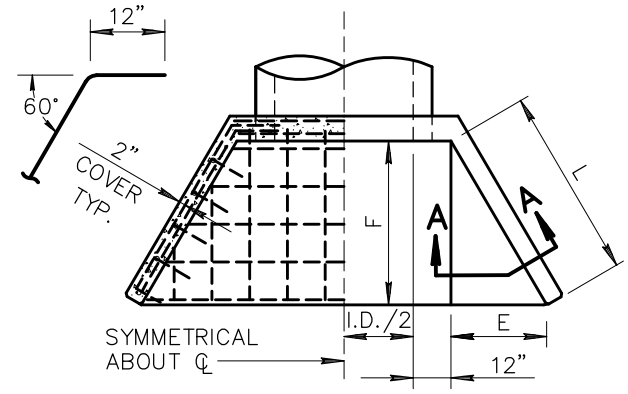

PLAN

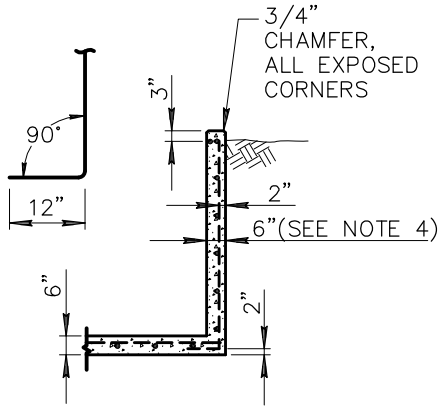

SECTION A–A

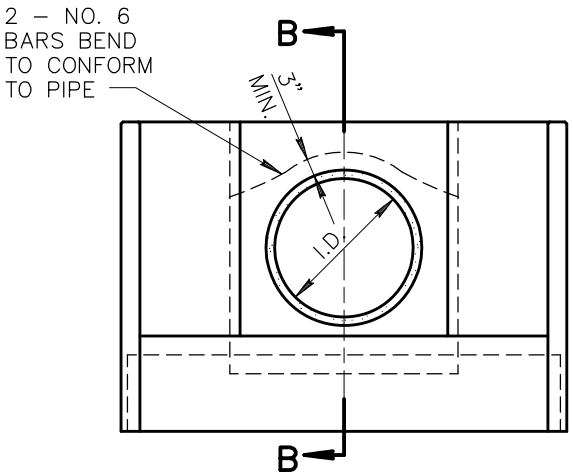

ELEVATION

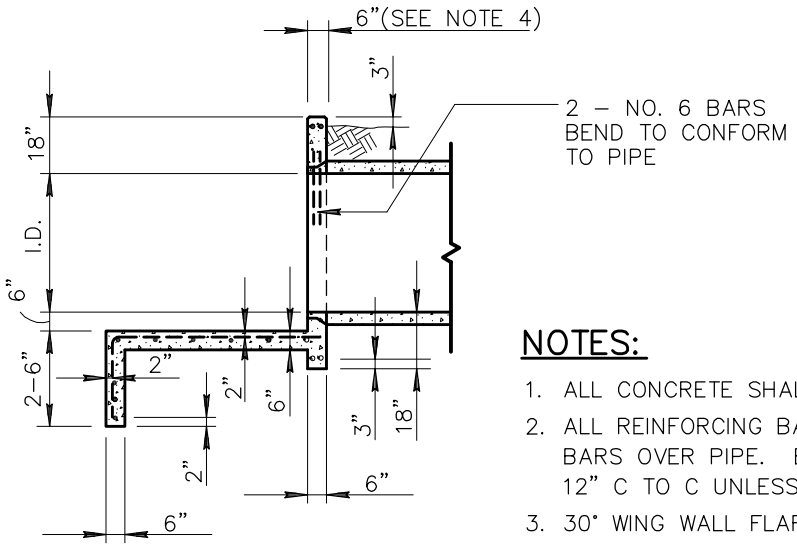

SECTION B–B

PIPE I.D.	DIMENSIONS		
	L	E	F (APPROX)
18"	2'–0"	1'–0"	1'–9"
24"	2'–0"	1'–0"	1'–9"
30"	3'–0"	1'–6"	2'–7"
36"	4'–0"	2'–0"	3'–6"
42"	5'–0"	2'–6"	4'–4"
48"	6'–0"	3'–0"	5'–2"
54"	7'–0"	3'–6"	6'–1"
60"	8'–0"	4'–0"	6'–11"

NOTES:

1. ALL CONCRETE SHALL BE CLASS 'A' PER SECT. 725.
2. ALL REINFORCING BARS SHALL BE NO. 4 EXCEPT NO. 6 BARS OVER PIPE. BAR SPACING APPROXIMATELY 12" C TO C UNLESS OTHERWISE NOTED.
3. 30° WING WALL FLARE SHOWN; 45° NORMALLY DESIRABLE.
4. FOR WALLS REQUIRING SAFETY RAIL, MIN. WALL THICKNESS IS 8". SEE DETAIL 145 FOR ADDITIONAL REQUIREMENTS.

DETAIL NO.				REVISED DRAFT	DETAIL NO.
501–4	MARICOPA ASSOCIATION of GOVERNMENTS	STANDARD DETAIL ENGLISH	HEADWALL IRRIGATION 18" TO 60" PIPE	09–19–2018	501–4

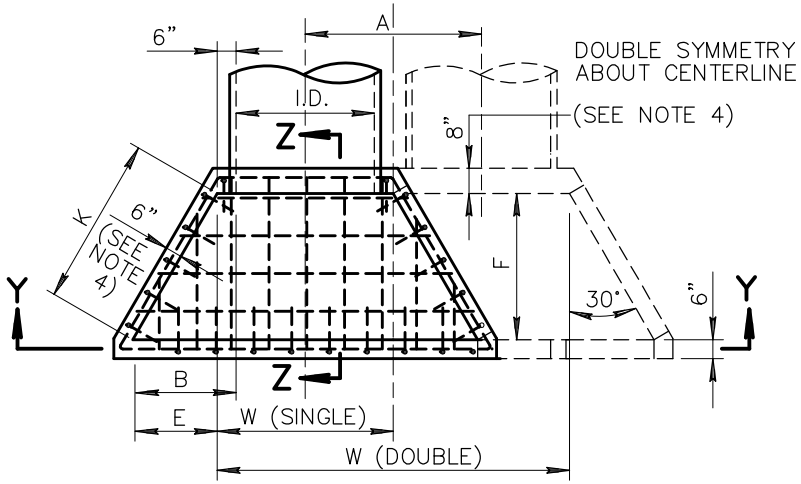

PLAN

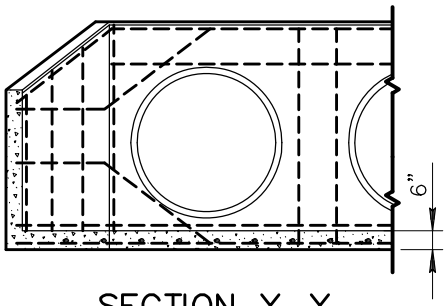

SECTION Y-Y

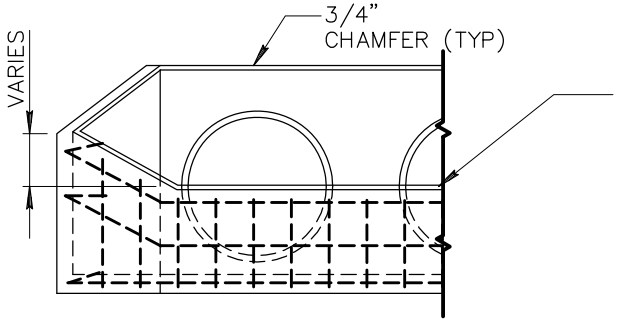

ELEVATION

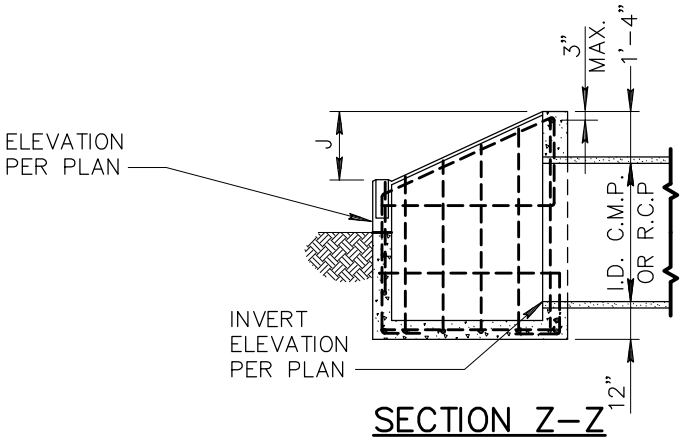

SECTION Z-Z

PIPE	DIMENSIONS							
I.D.	W		A	B	E	F	J	K
	SINGLE	DOUBLE						
18"	2'-6"	5'-2"	2'-8"	1'-3"	0'-9"	1'-3·5/8"	9"	1'-6"
24"	3'-0"	6'-6"	3'-6"	1'-7·1/2"	1'-1·1/2"	1'-11·3/8"	11"	2'-3"
30"	3'-6"	7'-10"	4'-4"	2'-0"	1'-6"	2'-7·1/4"	1'-1"	3'-0"
36"	4'-0"	9'-2"	5'-2"	2'-4·1/2"	1'-10·1/2"	3'-3"	1'-4"	3'-9"
42"	4'-6"	10-6"	6'-0"	2'-9"	2'-3"	3'-10·3/4"	1'-6"	4'-6"

NOTES:

1. HIGH POINT OF HEADWALL SHALL NOT PROJECT MORE THAN 3" ABOVE SLOPE.
2. ALL CONCRETE SHALL BE CLASS 'A' PER SECT. 725.
3. ALL REINFORCING BARS SHALL BE NO. 4, 12" C TO C AND 3" CLEAR TO INSIDE OF FLOOR AND WALLS.
4. FOR WALLS REQUIRING SAFETY RAIL, MIN. WALL THICKNESS IS 8". SEE DETAIL 145 FOR ADDITIONAL REQUIREMENTS.

DETAIL NO.				REVISED DRAFT	DETAIL NO.
501-5	MARICOPA ASSOCIATION of GOVERNMENTS	STANDARD DETAIL ENGLISH	HEADWALL DROP INLET	09-19-2018	501-5

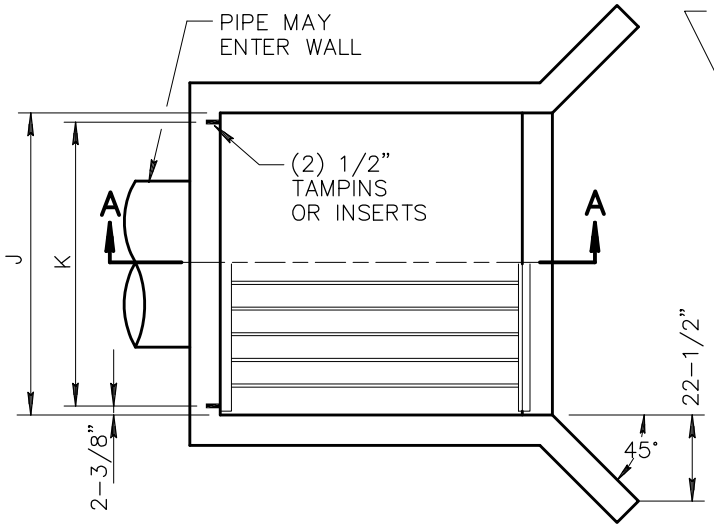

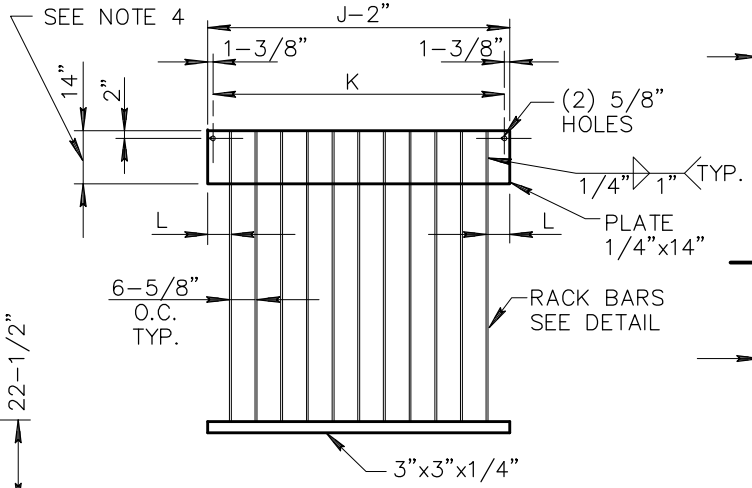

TRASH RACK

POURED WALLS

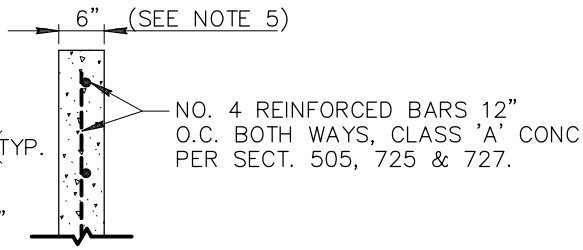

BLOCK WALLS

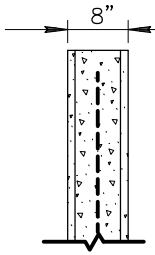

BLOCK HEADWALL TO HAVE ONE NO.4 REINF. BAR CENTERED IN EACH CORE FOR FULL HEIGHT AND CORES FILLED WITH CONCRETE OR CEMENT GROUT (3:1 RATIO). ALL BLOCKS TO BE JOINTED WITH MORTAR. PLASTERED ON EXPOSED SURFACES THEN SPRAY WITH WHITE PIGMENTED CURING COMPOUND. SECT. 510, 727 & 776.

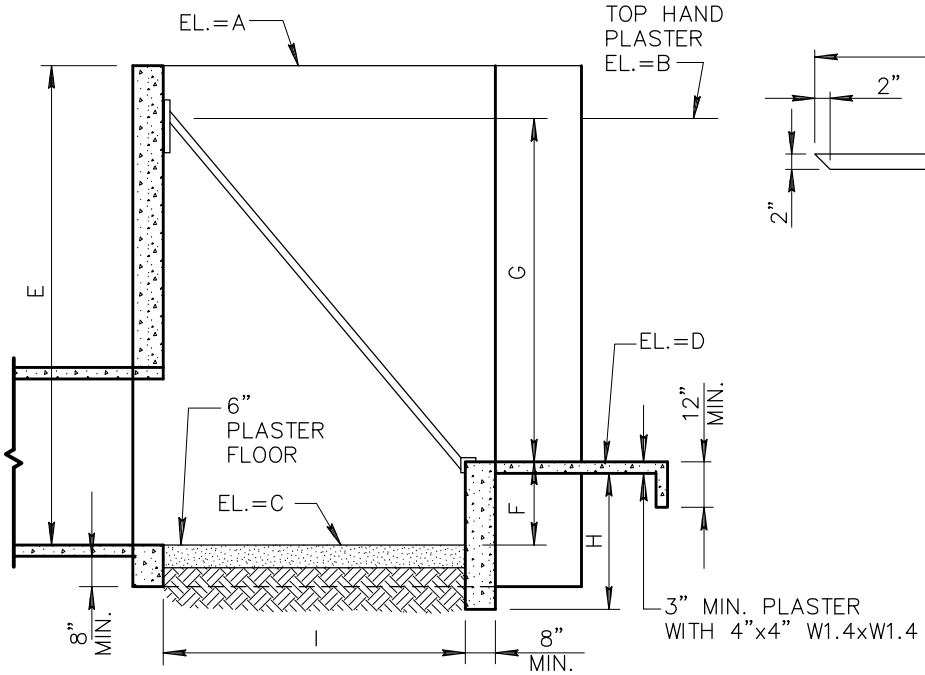

SECTION A-A

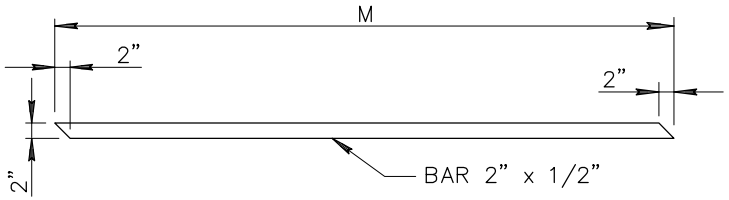

RACK BARS

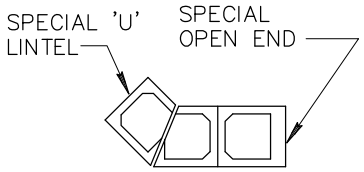

45° BLOCK CORNER

NOTES:

1. REMOVE ALL SCALE FROM RACK BARS. METAL SPRAY OR PAINT WITH ONE COAT ZINC CHROMATE OR RED LEAD PRIMER (INDUSTRIAL QUALITY). OVERCOAT WITH GREY INDUSTRIAL ENAMEL SECT. 790.
2. SHAPE, COMPACT AND PLASTER NEW DITCH FROM HEADWALL TO UNDISTURBED EXISTING DITCH. PLASTER TO EXTEND TO MINIMUM ELEVATION NOTED 3 FEET BEYOND CONNECTION TO UNDISTURBED EXISTING DITCH.
3. ELEVATIONS A, B, C & D AND DIMENSIONS E, F, G, H, I, J, K, L & M WILL BE SHOWN ON PLANS. DIMENSIONS SHOULD PROVIDE STANDARD SIZE BLOCK.
4. 14" PLATE SHALL NOT EXTEND BELOW TOP OF PIPE.
5. FOR WALLS REQUIRING SAFETY RAIL, MIN. WALL THICKNESS IS 8". SEE DETAIL 145 FOR ADDITIONAL REQUIREMENTS.
6. FOR BLOCK WALLS REQUIRING SAFETY RAIL, SEE DETAIL 145, NOTE 8.

DETAIL NO.				REVISED	DETAIL NO.
502-1	MARICOPA ASSOCIATION of GOVERNMENTS	STANDARD DETAIL ENGLISH	TRASH RACK	DRAFT 09-19-2018	502-1