MAG Left Turn Crash Mitigation Implementation Template & Guidance

May 2018

MARICOPA ASSOCIATION of GOVERNMENTS

Protection for the findings in this report:

23 U.S.C. § 409 ("Section 409") expressly forbids the discovery or admission into evidence of reports, data, or other information compiled or collected for activities required pursuant to several Federal highway safety programs (Sections 130, and 152 (now 148)), or for the purpose of developing any highway safety construction improvement project, which may be implemented utilizing federal aid highway funds, in tort litigation arising from occurrences at the locations addressed in such documents or data.

MAG Left Turn Crash Mitigation Implementation Template & Guidance

Introduction

Left-turns represent one of the riskiest movement for motorists at signalized intersections. Left-turn crashes typically make up the highest frequency of fatal and serious injury crashes at signalized intersections. The 2015 MAG Strategic Transportation Safety Plan (STSP) indicated that at signalized intersections in the MAG region, left-turn crashes made up 27 percent of the fatal crashes and 33 percent of the serious injury crashes. Since 2011, MAG has conducted over 50 Road Safety Assessments (RSAs) which have shown that the lack of sufficient sight distance is a potential causal factor in left-turn crashes. It is widely accepted that a positive offset of left-turn lanes improves sight distance and would help mitigate this crash risk.

Goal and Objectives

The overall goal of this study is to help address the "Eliminate Deaths and Serious Injuries Related to Crashes at Intersections" Action Area in the MAG STSP by assessing intersection safety improvements as they relate to creating positive offsets at left-turn lanes. The specific objective is to provide technical guidance to local agencies in identifying locations with left-turn safety concerns and in mitigating these issues, with a focus on improving negative offsets at opposing left-turn lanes. The guidelines were developed assuming agencies have limited staff, resources, and data. Important left-turn safety issues can be identified efficiently through aerial photography (e.g. Maricopa County aerials, Google Maps), with field reviews as needed. Crash data analysis and field measurements are not required. The regional analysis methodology developed by MAG to screen intersections is provided in Appendix A.

Literature Review

The following documents were reviewed for findings on the safety impacts of negative offset left-turn lanes and the benefits of positive offsets at intersections:

- Analysis of Naturalistic Driving Study Data: Offset Left-Turn Lanes, SHRP 2 Report SR-S08B-RW-1, 2015
- Intersection Sight Distance for Unprotected Left-Turn Traffic, Florida DOT, 2006
- Safety Evaluation of Offset Improvements for Left-Turn Lanes, FHWA-HRT-090-035, 2009
- Guidelines for Offsetting Opposing Left-Turn Lanes on Four-Lane Divided Roadways, Transportation Research Record 1356, 1992
- FHWA Crash Modification Factor Clearinghouse

Key findings from the literature review include:

- Offset improvements for left-turn lanes that result in a **positive** offset have the potential to reduce crashes and crash severity at signalized intersections. A left-turn crash reduction of 38 percent is associated with improving a negative offset (FHWA CMF Clearinghouse).
- Applicable only when the intersections approaches have straight alignment with no horizontal curves and the roads intersect at or close to 90 degrees: A 2-foot positive offset provides unrestricted sight distance when the opposing left-turn vehicle is a passenger car, and a 3.5-foot positive offset provides unrestricted sight distance when the opposing

left-turn vehicle is a truck (based on a truck width of 8.5 feet, which corresponds to City Transit Bus, WB-50, and WB-67).

Negative Offset Left-Turn Lanes

The most common sight obstruction at intersections is a vehicle, particularly a large vehicle, stopped in the opposing left-turn lane. The left-turn offset distance can exacerbate this situation. The left-turn offset distance is defined as the lateral distance between the left edge of a left-turn lane and the right edge of the opposing left-turn lane. If the right edge of the opposing left-turn lane is to the left of the left edge of the left-turn lane, the offset is defined as “negative”; if it is to the right, the offset is defined as “positive.” Figures 1 and 2 illustrate these conditions.

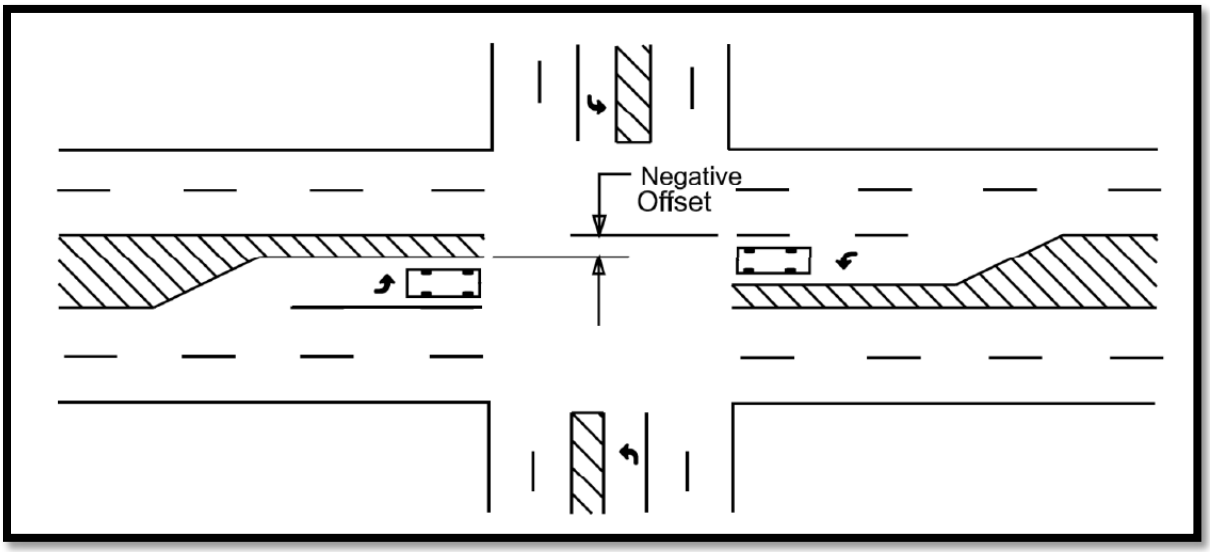

Figure 1. Negative Offset Left-Turn Lanes

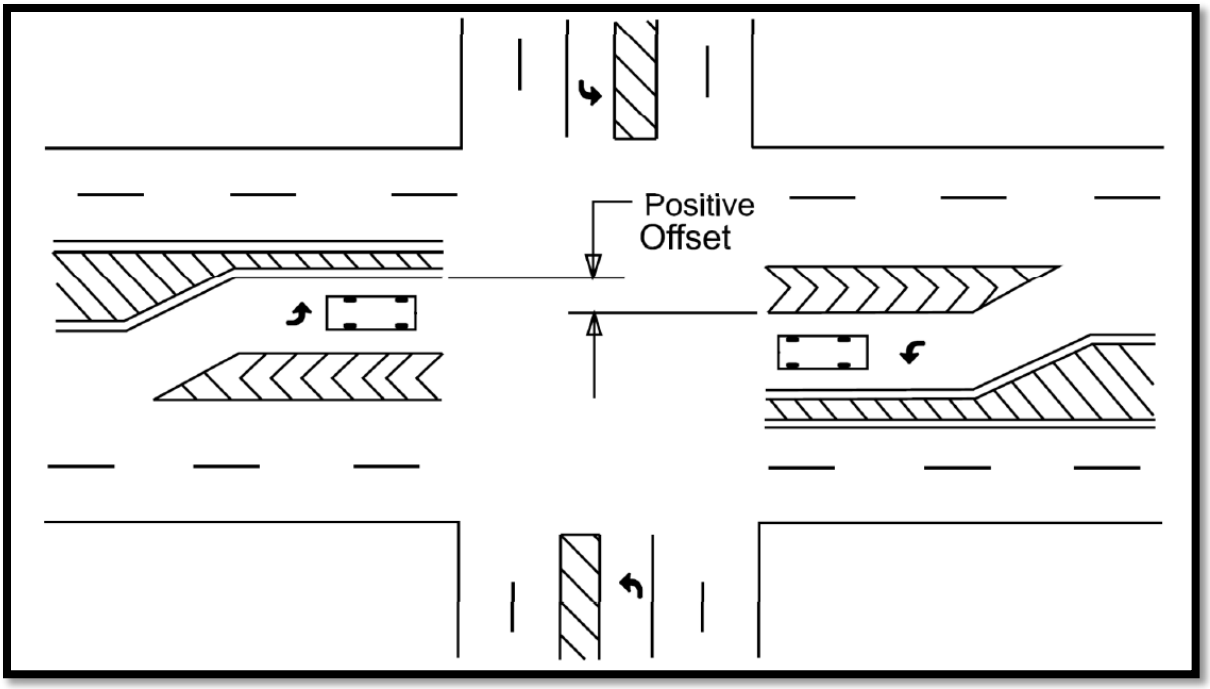

Figure 2. Positive Offset Left-Turn Lanes

Identifying Negative Offset Left-Turn Lane Locations: Identifying locations with negative offset left-turn lanes is a simple and straight-forward process. One can use Maricopa County aerial photography from the County's website (gis.maricopa.gov/GIO/HistoricalAerial/), Google Maps, or as-built plans to examine the offsets. Use a straight-edge to "extend" the left edge of the left-turn lane through the intersection to see where it lines up with the right edge of the opposing left-turn lane. If it lines up with the right edge (zero offset) or lines up to the right of the right edge (negative offset), there will be sight distance restrictions anytime a vehicle is queued in the opposing left-turn lane. In fact, there may be sight distance restrictions if the left edge lines up to the left of the right edge of the opposing left-turn lane (positive offset) if this offset is less than 3.5 feet, especially at locations with high large truck volumes. Figures 3 and 4 show local examples in the MAG region of negative and positive offset left-turn lanes.

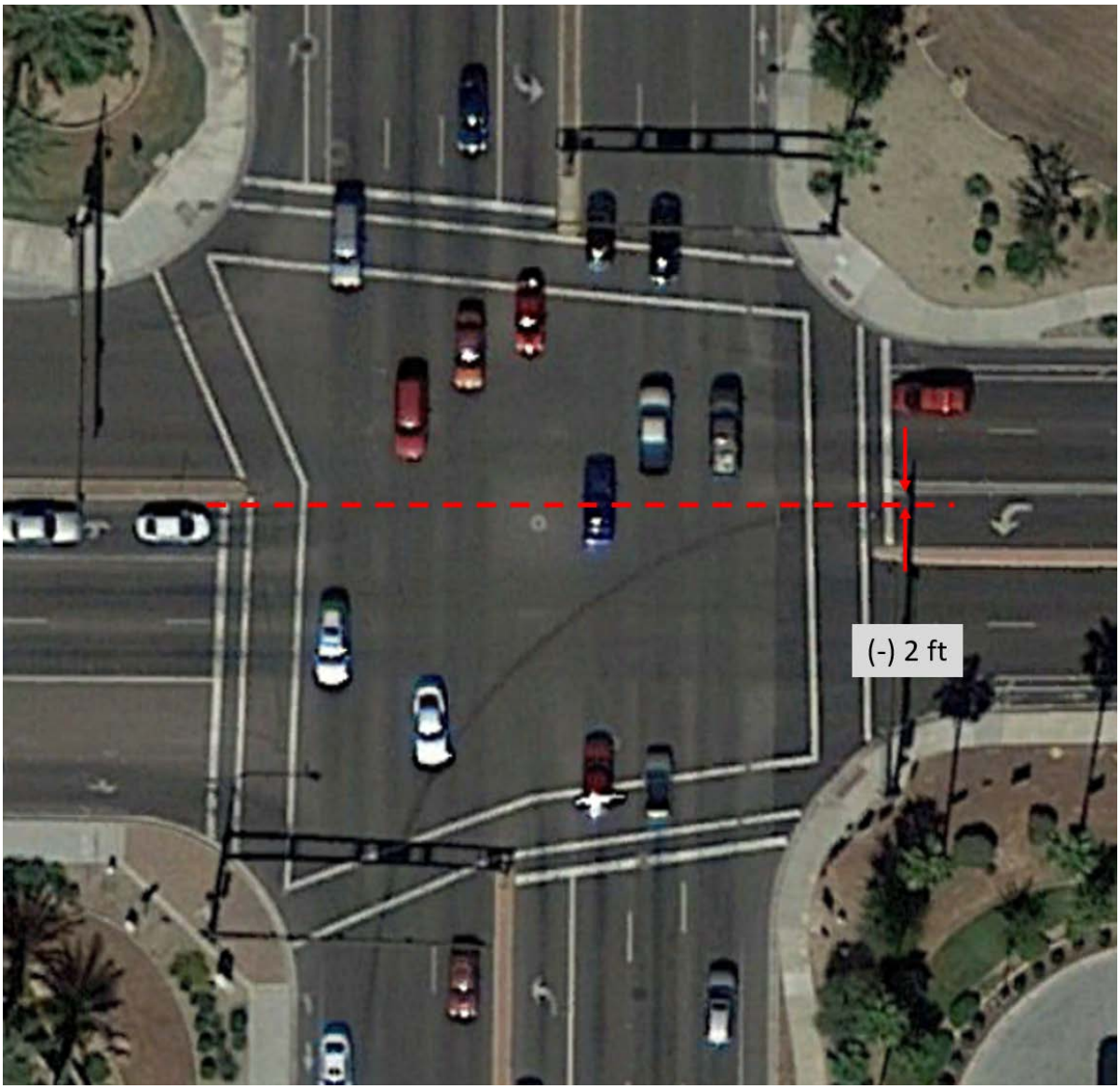

Figure 3. Local Example of Negative Offset Left-Turn Lanes

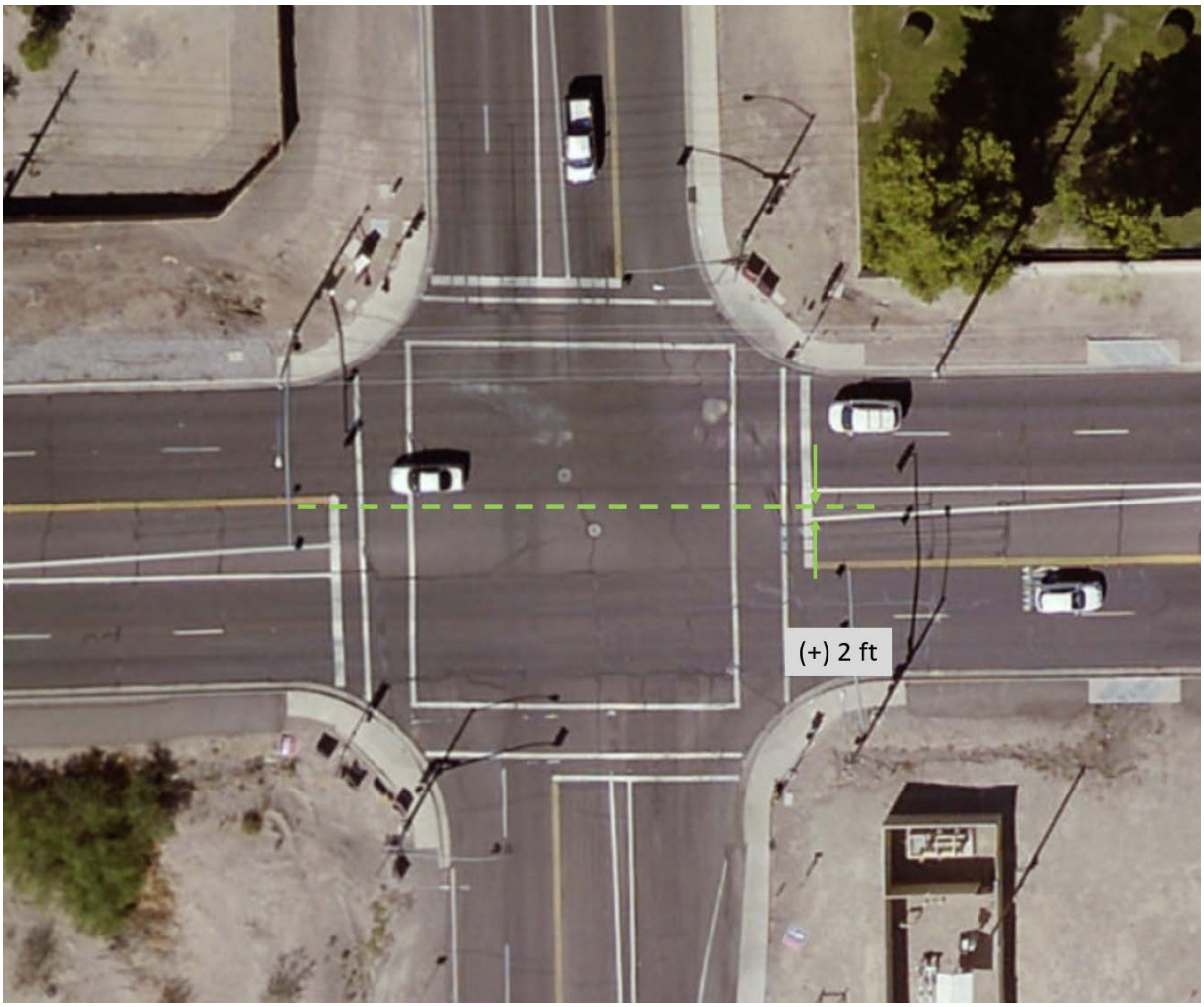

Figure 4. Local Example of Positive Offset Left-Turn Lanes

For a driver turning left against oncoming traffic, the decision process and corresponding sight distance requirement calculations are complex. Sight distance is affected by the presence, type (passenger vehicle versus heavy vehicle), and location (position within the intersection) of opposing left-turning traffic, and by the lateral offset of the opposite left-turn lanes. These relationships are illustrated in Figure 5, but there is really no need to perform these measurements – the important thing to know is if there is a positive offset. If there is no positive offset, the sight distance will be inadequate anytime a vehicle is in the opposing left-turn lane.

Mitigating Existing Left-Turn Offset Issues: Sight distance can be improved by shifting left-turning vehicles to the left of the opposing left-turn vehicle. This can be accomplished by shifting lanes to the left through re-striping to guide vehicles to the left. For intersections with raised medians on the approaches, the median widths can be adjusted and the medians pulled back away from the intersection in conjunction with re-striping to obtain a positive offset. Exhibits 1

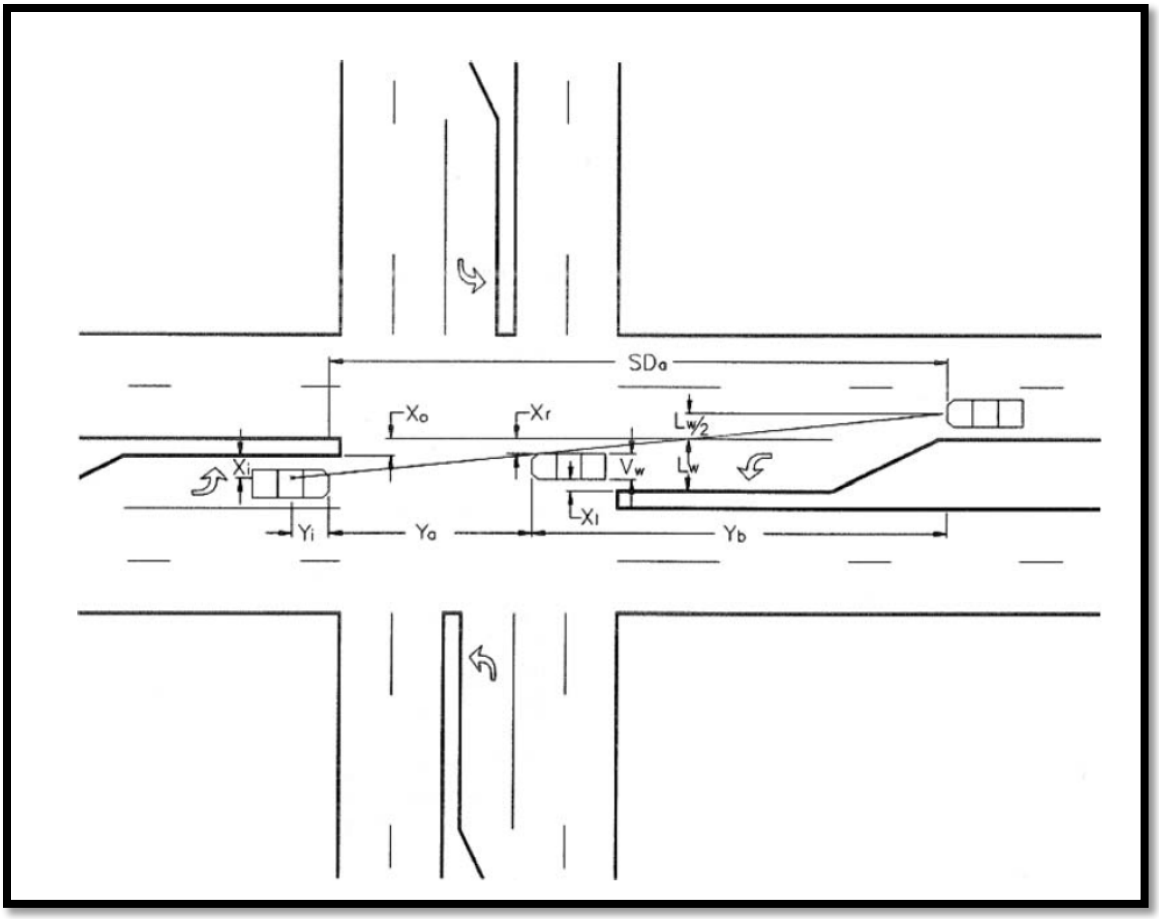

Figure 5. Spatial Relationships that Determine Available Sight Distance

and 2 show examples of these improvements for an intersection with a raised median on one leg (Condition A) or on two legs (Condition B). These guidelines assume the left-turn lanes have adequate storage length; otherwise, queued opposing left-turn vehicles could be positioned in the opposing through lane, greatly reducing sight distance. To provide optimal sight distance, these improvements need to provide a minimum of 3.5 feet of positive offset if large trucks are expected to use the left-turn lanes. A minimum offset of 2.0 feet provides adequate sight distance only if a passenger car is in the opposing left-turn lane. Reducing and/or eliminating a negative left-turn offset is a function of the left-turn lane geometry; there are no “math” equations. Exhibits 1 and 2 provide recommended dimensions to move vehicles into a positive offset position given various existing dimensions. Removing 20 feet of the median nose provides space for one (1) vehicle to position itself to utilize the full offset to maximize sight distance. The designer should calculate minimum dimensions to line up the left edge (zero offset) or left separate (positive offset) opposing left-turning vehicles. The guidance document is not intended to be a one-size-fits-all criterion. The designer will have other opportunities and constraints to consider when implementing a correction to an existing negative left-turn offset.

Typically, the re-striping of the left-turn lane provides a “carrot” to encourage vehicle positioning as far left as possible. Ideally, the left-turn lane width is narrowed to 9 feet (10-foot maximum); larger vehicles can extend into the carrot if needed. In addition, narrowing of existing through lanes can provide some of the width needed to offset the left-turn lanes.

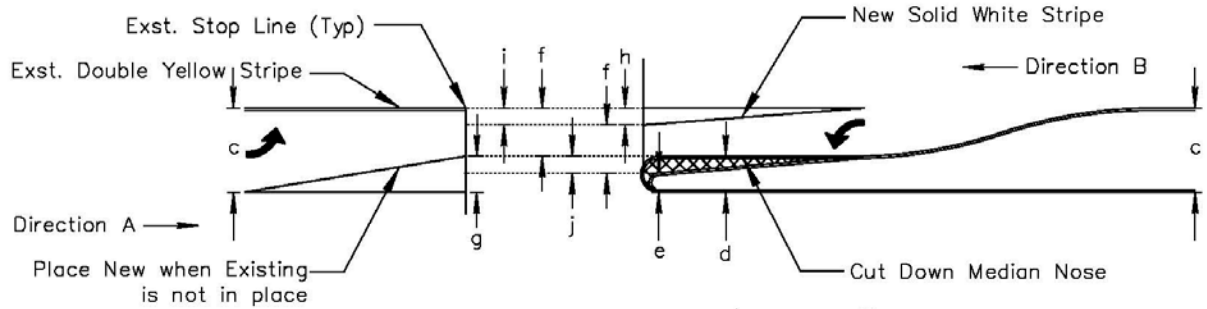

Existing Wide Median Nose (width≥4')

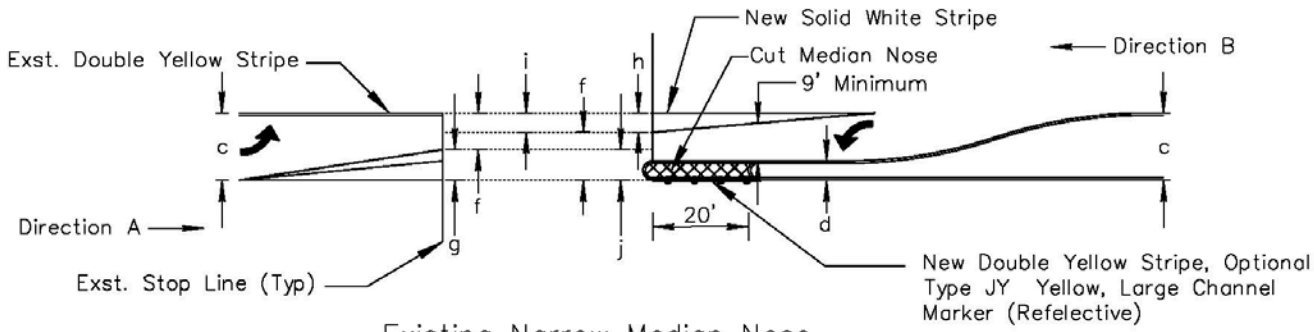

Existing Narrow Median Nose

EXISTING		RECOMMENDED					
MEDIAN WIDTH (FT)	MEDIAN NOSE WIDTH (FT)	MEDIAN NOSE WIDTH (FT)	LT LANE WIDTH (FT)	CARROT (FT)		OFFSET(+) (FT)	
				DIRECTION A	DIRECTION B	DIRECTION A	DIRECTION B
c	d	e	f	g	h	i	j
16	4	2	10	6	4	4	4
14	4	2	10	4	2	2	2
14*	2*	Keep Exist.	10	4	2	2	2
		Remove	10	4	4	4	4
12	2	Remove	10	2	2	2	2

*Choose better option justifying site specific condition.

Condition A

One Leg with Raised Median–
Opposing Lane with Striped Median
Existing Zero or Negative Offset

EXHIBIT NO.		DATE	EXHIBIT NO.
1	LEFT–TURN LANE MODIFICATION TO CORRECT NEGATIVE OFFSET	07–27–2017	1

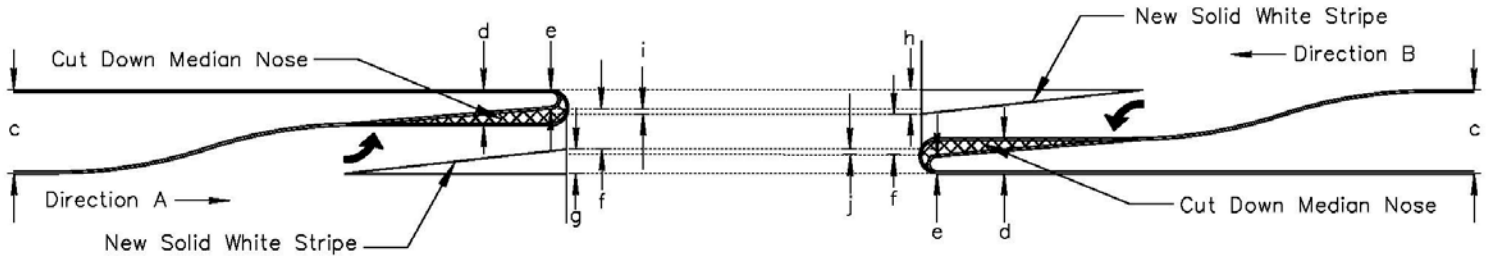

Existing Wide Median Nose (width> 4')

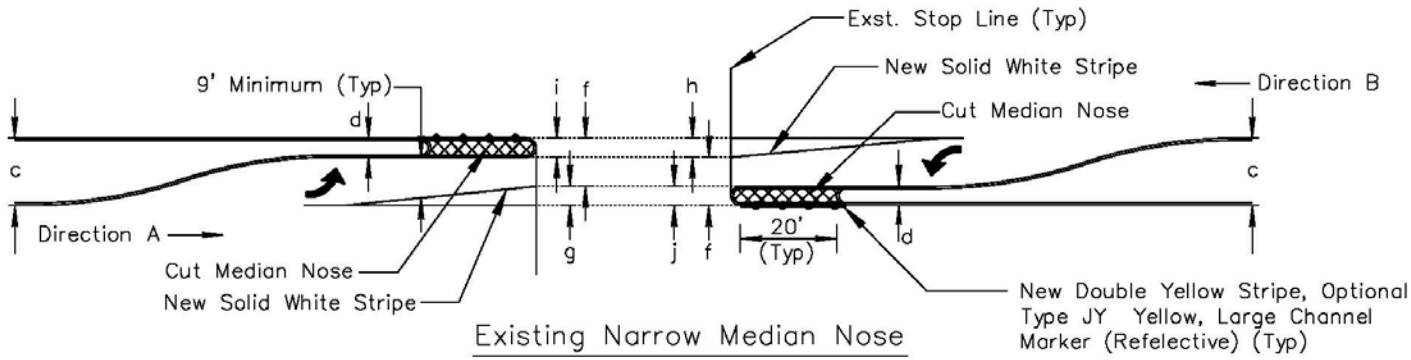

Existing Narrow Median Nose

EXISTING		RECOMMENDED					
MEDIAN WIDTH (FT)	MEDIAN NOSE WIDTH (FT)	MEDIAN NOSE WIDTH (FT)	LT LANE WIDTH (FT)	CARROT (FT)		OFFSET(+) (FT)	
				DIRECTION A	DIRECTION B	DIRECTION A	DIRECTION B
c	d	e	f	g	h	i	j
16	4	2	10	4	4	2	2
14	4	Remove	10	4	4	4	4
14	2	Remove	10	4	4	4	4
12	2	Remove	10	2	2	2	2

Condition B

Both Legs with Raised Median–
Existing Zero or Negative Offset

EXHIBIT NO.	LEFT–TURN LANE MODIFICATION TO CORRECT NEGATIVE OFFSET	DATE	EXHIBIT NO.
2		05–02–2017	2

Mitigating Future Left-Turn Offset Issues: It has been observed that many agencies in Arizona currently use road design standards and guidelines for intersections, turn lanes, and medians that inadvertently introduce zero or negative offset left-turn lanes. It is recommended that such standards and guidelines be updated to specifically eliminate future design of negative offset left-turn lanes, unless they operate only with protected left-turn signal phasing. MAG member agencies are encouraged to adopt policies and design guidelines that would specifically address left-turn lane offsets. An example policy is:

"When installing left-turn lanes or designing new intersections where left turning traffic must yield to on-coming traffic, provide a minimum of 3.5 feet of positive offset for opposing left-turn lanes, as shown in Figure 6, to ensure adequate sight distance for left-turning drivers."

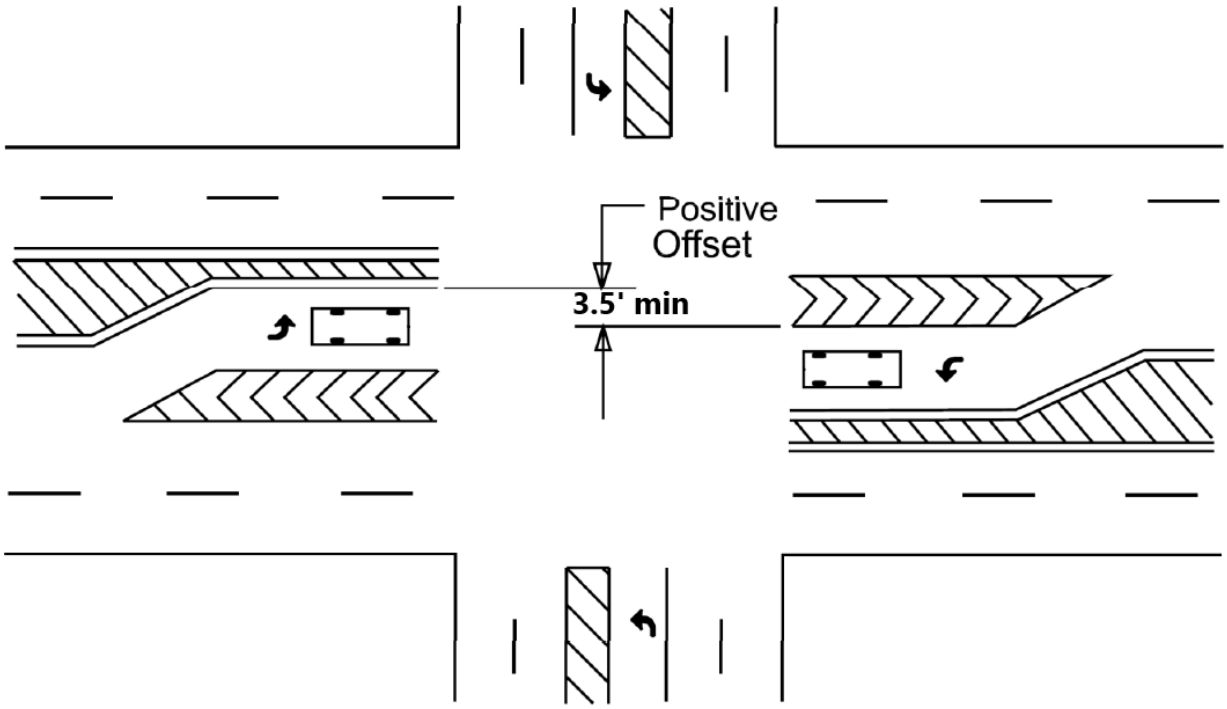

Figure 6. Minimum Positive Offset for New Left-Turn Lanes

Intersections may be designed and build with negative offsets as long as a protected left-turn signal phase is provided to turning traffic. When changes to intersection signal operations are made, agencies need to verify that the protected left-turn phase is maintained at all intersections with negative offsets OR take steps to modify the intersection to provide a positive offset. The safer alternative for agencies is to adopt a policy that ensure positive offsets are provided, for left-turning traffic at all intersections.

Flashing Yellow Arrow Left-Turn Issues: Many decision factors and policies are used in the implementation of the flashing yellow arrow. Many locations that previously operated with protected-permissive phasing have benefitted from the implementation of the flashing yellow arrow during the permissive phase, for reducing delay. However, safety issues may arise if flashing yellow arrow is implemented at locations with negative offset lanes, where the left-turn phase was previously operating with protected-only phasing. This means that the left-turns are

now operating as protected-permissive. Review of the Federal Highway Administration Crash Modification Factors (CMF) Clearinghouse, implementation of a flashing yellow at a protected only phasing location has an associated 2.242 CMF, or 124.2 percent increase in left-turn crashes. Change from protected-permissive phasing to flashing yellow arrow during permissive phase has an associated 0.806 CMF, or 19.4 percent decrease in left-turn crashes. Both of these CMFs are for urban conditions and have a four or higher star rating. Crash Modification Factors are assigned a star rating based on the quality or confidence in the results of the study producing the CMF on a one to five star rating scale. Local agencies are encouraged to include review of similar data when deciding to implement the flashing yellow arrow. Additional recommendations and guidance for consideration of implementation of the flashing yellow arrow is provided below.

Additional Left-Turn Crash Mitigation Recommendations and Guidance

In addition to negative offset left-turn lanes, the following factors can impact left-turn movement safety: signal phasing, sight distance, opposing through and left-turn volumes, number of opposing lanes, vehicle speeds, signal visibility and placement, and pedestrian and bike volumes. Additional strategies can be implemented at signalized intersections to reduce the left-turn conflict and crash risk as discussed in the following sections.

Signal Phasing: The majority of left-turn crashes occur during the permissive signal phase, when drivers may have to turn in front of oncoming vehicles; hence, signal phasing may be the most influential factor in left-turn crashes. Protected-only phasing removes the conflict between left-turning vehicles and oncoming vehicles. In fact, changing from protected/permissive to protected-only phasing has a crash reduction factor of 99 percent for left-turn crashes. However, this greater degree of safety can sometimes come at the cost of efficiency in the form of reduced throughput and increased delay. Protected-permissive mode is widely considered the most efficient left-turn mode, as it reduces conflicts between left-turning vehicles and opposing vehicles while providing an opportunity for the left-turn bay to clear and for further throughput during the permissive portion of the phase. However, with increased opposing volume, the benefits of protected-permissive mode – namely efficiency – are reduced as drivers have more difficulty finding acceptable gaps to make permissive left turns. Protected-permissive mode also may not be safe to implement under other conditions, including high speeds or limited sight distance.

Most agencies require protected-only phasing if the approach has more than one left-turn lane. Many agencies also require protected-only phasing if the intersection has inadequate sight distance. Negative offset left-turn lanes create unsafe sight restriction when a vehicle is in the opposing left-turn lane, which can lead to crashes. Drivers expect that the intersections are designed with adequate sight distance for all likely operating conditions. Similarly, the opportunity for finding acceptable gaps for turning left varies throughout the day. Many agencies require protected-only phasing when pedestrian volumes are high to remove the conflict between pedestrians and left-turning vehicles during the permissive phase.

Ideally, the phasing should be flexible enough to provide time of day phasing; for example, protected-only when there are sight obstructions or minimal gaps (peak hours), and permissive phasing when more efficient and when fewer conflicts exist (off-peak). Signal timing can also be adjusted to provide additional protected-only phase timing during high volume periods such as morning and evening peaks.

Implementing flashing yellow arrow (FYA) signals provides the flexibility to vary left-turn phasing by time of day, to provide:

- protected only, when traffic is heavy and gaps in opposing traffic are minimal
- protected then permissive or permissive then protected as needed
- permissive left turns when traffic is light, which in a 24 day is most of the time

The FYA can also bypass the permissive phase when a pedestrian pushes the pedestrian signal call button, providing a walk phase where no left-turning vehicles conflict with the crossing pedestrians.

There has been some concern that changing phasing patterns throughout the day will lead to driver confusion. However, Nandam and Hess[1] found that the dynamic change of left-turn sequence by time of day did not have any impact on safety.

Sight Distance: In addition to vehicles in the opposing left-turn lane, factors that can contribute to inadequate sight distance for left-turning motorists include horizontal or vertical curves near the intersection, and vegetation in the median. Many agencies either prohibit vegetation, boulders, or other objects in medians close to the intersection, or limit the size of vegetation in medians (vegetation less than 2 feet high and trees trimmed to a minimum of 7 feet above ground). Construction of horizontal and vertical curves on intersection approaches should be avoided.

Sight distance is also impacted by approaches with dual or triple left-turn lanes, and most agencies use protected-only phasing for approaches with multiple left-turn lanes. Sight distance should be checked for left-turn movements in all scenarios, and protected-only phasing considered when adequate sight distance cannot be provided.

Vehicle Speeds and Volumes: Vehicle speeds impact the left-turning motorists' ability to select adequate gaps in oncoming traffic for making a safe turn maneuver. Higher speeds lead to fewer gaps, and higher speeds typically result in a more severe crash. Higher volumes of turning and oncoming traffic also lead to fewer gaps, which can tempt drivers into making a riskier turn maneuver.

Reducing approach speeds at signalized intersections can help improve safety. A 10 percent reduction in mean speed leads to the following crash reduction factors:

- 32 percent CRF for fatal crashes
- 15 percent CRF for serious and minor injury crashes

Methods for reducing speeds include narrowing lane widths, installing speed feedback signs, and increased enforcement (to include photo enforcement).

If left-turning volumes are high, consider installing dual left-turn lanes with appropriate phasing. Typically, when peak hour left-turn volume exceeds 300 vehicles per hour, dual left-turn lanes are warranted.

Crossing Width: The width of pavement that a left-turning vehicle must cross influences the exposure to oncoming vehicles. As the number of opposing lanes and road width increase, exposure and crash risk increase. While the number of lanes usually cannot be reduced due to capacity needs, it may be feasible to narrow the lane and median widths to reduce the crossing distance.

[1] *Nandam, L. Kanth & Hess, T. Douglass. "Dynamic Change of Left Turn Phase Sequence between Time-of-Day Patterns – Operational and Safety Impacts." Institute of Transportation Engineers Annual Conference, Nashville, TN, 2000.*

Signal Visibility and Placement: The traffic signal head should be placed such that the left-turning driver can see the signal head from the left-turn decision point. Ideally, left-turn signal heads should be installed over the left-turn lane and on the far left side of the intersection. Having multiple signal head locations can help reduce the impact of a signal head being blocked by a large vehicle or tree limbs.

Larger signal indications have higher visibility; all new installations shall have 12-inch signal indications per the MUTCD. Any existing locations with older 8-inch indications should be updated with 12-inch indications. Backplates with retroreflective borders increase signal conspicuity and are designated as an FHWA Proven Safety Countermeasure, with a crash reduction factor of 15 percent for intersection crashes.

Pedestrian and Bicycle Volumes: Pedestrians and bicyclists crossing at intersections add an additional conflict point for the left-turning motorist. They are usually outside the cone of vision of the left-turning driver, who is looking at oncoming vehicles to judge gaps. If pedestrian and bicycle volumes are high, a leading pedestrian interval (LPI) should be considered. LPIs provide a 37 percent reduction in vehicle/pedestrian and vehicle/bike crashes. Protected-only phasing should also be considered. The FYA can be installed to provide a walk phase where no left-turning vehicles conflict with the crossing pedestrians when a pedestrian pushes the pedestrian signal call button. Bicyclists riding at approach speed much faster than the assumed pedestrian walking speed of 3.5 feet per second can create unique challenges to intersection safety.

Conclusion

Left-turn crashes typically account for the highest number of fatal and serious injury crashes at signalized intersections. Various factors can influence the risk of left-turn crashes occurring at intersections, including sight distance, signal phasing, speeds, roadway width and number of lanes, signal visibility and vehicular, pedestrian, and bicyclist volumes.

A key factor impacting the left-turn crash frequency is restricted sight distance, often due to negative or zero offset left-turn lanes. In these situations, vehicles in the opposing left-turn lanes block the view of motorists wanting to make a left-turn. A quick in-office review using aerial photography, Google Maps, or as-built plans can identify intersections with left-turn offset issues.

In some cases, median and pavement marking modifications can be made to improve the sight distance. However, if adequate sight distance cannot be provided, appropriate left-turn phasing should be considered for implementation. Additional countermeasures to consider for improving left-turn safety include reducing speeds, narrowing crossing distances, removing and limiting vegetation and objects in the median, improving signal head visibility, and implementing leading pedestrian intervals. Figure 7 provides a flowchart for assessing left-turn safety issues at signalized intersections.

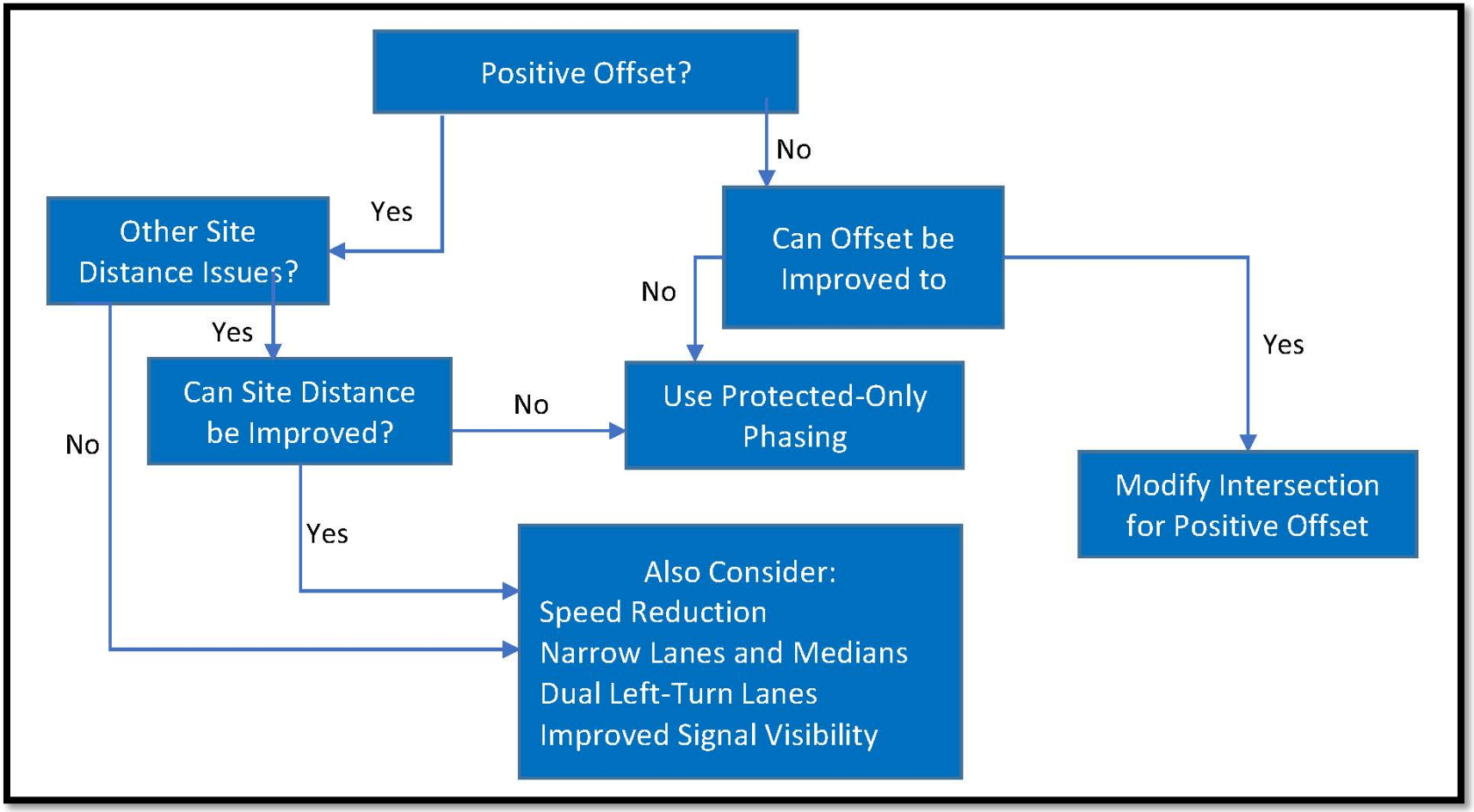

Figure 7. Flowchart for Assessing Left-Turn Safety at Signalized Intersections

Appendix A

Systemic Strategy to Mitigate Intersection Left-Turn Crashes:

A Regional Analysis Methodology

I. Preface

The Phoenix metropolitan planning area consists of 27 local cities and towns and 3 tribal communities with a population of nearly five million. The Maricopa Association of Governments (MAG), as the designated regional planning organization, has conducted over 50 Road Safety Assessments (RSAs) since 2011 at intersections across the region. Based on the recommendations and observations of the RSAs, left-turn crashes are one of the most predominant crash types associated with fatalities and serious injuries occurring at intersections throughout the region. The lack of sufficient sight distance has been identified as a potential causal factor. It is widely accepted that "a positive offset of left turn lanes" improves sight distance and would help mitigate this crash risk. MAG has identified a project to study a Systemic Strategy to Mitigation Intersection Left Turn Crashes. The focus of this study is to assess and prioritize intersection safety improvements as they relate to creating positive offset.

The focus of this document is to outline the methodology used to screen over 22,000 intersections for further analysis towards the goals of the Systemic Strategy to Mitigate Intersection Left-Turn Crashes in the MAG region. In addition, this document will review the methodology used throughout the project towards the goals of; 1) Identifying locations appropriate for implementation of positive left-turn offset and 2) Developing local agency guidelines and template for improving left-turn movement safety at controlled intersections.

II. Screening for Region Wide Left Turn Crashes

The process was initiated utilizing the Maricopa Association of Governments application, the Regional Traffic Safety Information Management System (RTSIMS), for querying Arizona Accident Location, Identification and Surveillance System (ALISS) data. A screen shot of the query and SQL are shown below.

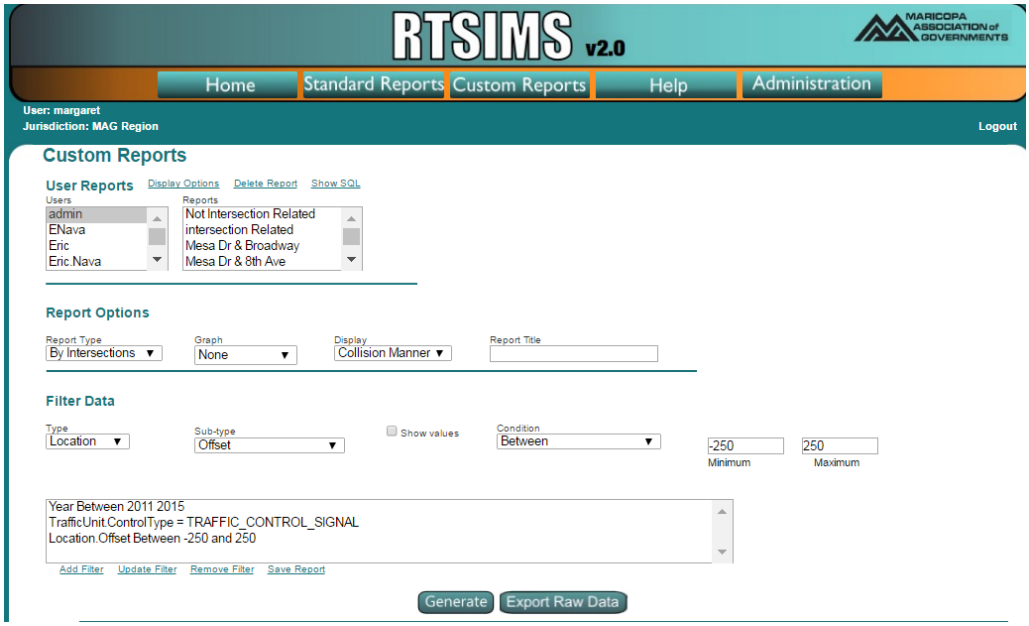

```
SELECT CollisionMannerDesc AS 'Column1', COUNT(CASE InjurySeverity WHEN 1 THEN 1 ELSE
NULL END) AS 'Column2', COUNT(CASE InjurySeverity WHEN 2 THEN 1 ELSE NULL END) AS
'Column3', COUNT(CASE InjurySeverity WHEN 3 THEN 1 ELSE NULL END) AS 'Column4',
COUNT(CASE InjurySeverity WHEN 4 THEN 1 ELSE NULL END) AS 'Column5', COUNT(CASE
InjurySeverity WHEN 5 THEN 1 ELSE NULL END) AS 'Column6', COUNT(CASE InjurySeverity WHEN
99 THEN 1 ELSE NULL END) AS 'Column7',NCICDesc AS 'Column8',(CASE WHEN onroad >
crossingfeature THEN RTRIM(SUBSTRING(Onroad,3,20))+' '+SUBSTRING(Onroad,25,50)+'
&'+(CASE WHEN LEFT(CrossingFeature,2) IN ('07','11') THEN
RTRIM(SUBSTRING(CrossingFeature,3,20))+' '+SUBSTRING(CrossingFeature,25,50) ELSE
RTRIM(SUBSTRING(CrossingFeature,0,9)) END) ELSE (CASE WHEN LEFT(CrossingFeature,2) IN
('07','11') THEN RTRIM(SUBSTRING(CrossingFeature,3,20))+'
'+SUBSTRING(CrossingFeature,25,50) ELSE RTRIM(SUBSTRING(CrossingFeature,0,9)) END)+'
&'+RTRIM(SUBSTRING(Onroad,3,20))+' '+SUBSTRING(Onroad,25,50) END) AS 'Column9',
COUNT(CASE InjurySeverity WHEN 1 THEN 1 ELSE NULL END) + COUNT(CASE InjurySeverity
WHEN 2 THEN 1 ELSE NULL END) + COUNT(CASE InjurySeverity WHEN 3 THEN 1 ELSE NULL END)
+ COUNT(CASE InjurySeverity WHEN 4 THEN 1 ELSE NULL END) + COUNT(CASE InjurySeverity
WHEN 5 THEN 1 ELSE NULL END) + COUNT(CASE InjurySeverity WHEN 99 THEN 1 ELSE NULL
END) AS 'Total' FROM Incident INNER JOIN Location ON Incident.IncidentID =
Location.IncidentID INNER JOIN collisionMannerDefn ON Incident.collisionManner =
collisionMannerDefn.collisionMannerCode INNER JOIN NCICDefn ON Incident.ExtendedNcic =
NCICDefn.NCICCode WHERE IntersectionType IN (1,2,3,4,5,6,7,98) AND LEFT(LTRIM(Onroad),2)
IN ('07','11') AND (Offset>=-0.0473484848484848 AND Offset<=0.0473484848484848) AND
((YEAR(AccDateTime) >= 2011 AND YEAR(AccDateTime) <= 2015)) AND (Incident.IncidentID in
(SELECT DISTINCT IncidentID FROM TrafficControlDevc WHERE ControlType = 1)) GROUP BY
NCICDesc,(CASE WHEN onroad > crossingfeature THEN RTRIM(SUBSTRING(Onroad,3,20))+'
'+SUBSTRING(Onroad,25,50)+' &'+(CASE WHEN LEFT(CrossingFeature,2) IN ('07','11') THEN
RTRIM(SUBSTRING(CrossingFeature,3,20))+' '+SUBSTRING(CrossingFeature,25,50) ELSE
RTRIM(SUBSTRING(CrossingFeature,0,9)) END) ELSE (CASE WHEN LEFT(CrossingFeature,2) IN
('07','11') THEN RTRIM(SUBSTRING(CrossingFeature,3,20))+'
'+SUBSTRING(CrossingFeature,25,50) ELSE RTRIM(SUBSTRING(CrossingFeature,0,9)) END)+'
&'+RTRIM(SUBSTRING(Onroad,3,20))+' '+SUBSTRING(Onroad,25,50) END),CollisionMannerDesc
ORDER BY NCICDesc,'Column9','Column1' DESC
```

III. Left Turn Crash Query Criteria Elements:

A. Intersections by collision manner

B. Years Between 2011-2015 (Five Years)

C. Signalized Intersections

D. Offset -250 to 250

The MAG region has over 22,000 intersections with recorded crashes including all collision manners. This query was done to identify signalized intersections with five or more left-turn crashes coded, regardless of severity, for the five most recent years of available data (2011-2015). The resulting report produced nearly 1,300 intersections with five or more total left-turn crashes coded for the five-year analysis period. At this point, a methodology was developed to reduce intersection sample size that would be more manageable for a region wide analysis, and to balance the focus on those intersections where the most improvement to left-turn safety could be made. For this purpose, the list of 1292 intersections was filtered to export a list of 244 intersections as a separate tab in the excel spreadsheet. Columns were populated for each corridor for total number of left-turn crashes, average annual number of left-turn crashes, and average annual left-turn crashes per mile for corridors with 12 or more left-turn crashes in the five-year analysis period. This produced a list of 98 corridors, which was then sorted, in descending order, by average annual left-turn crashes per mile ranging from 7.6 to 0.98. It was decided that those corridors with an annual average left-turn crash per mile at and above the average of the range (7.6 to 0.98), would be examined further towards the goal of the study. This resulted in 934 intersections on 52 corridors ranging from 3.2 to 7.6 average annual left-turn crashes per mile to be analyzed for the study. Each intersection was analyzed for percent left-turn crashes of the total number of crashes in the intersection, ranging from 5 percent to 78 percent left-turn crashes.

Upon review of the data export, which included over 44 crash report fields from the ALISS crash database, it was discovered that there could be several miscoded ANGLE, HEAD-ON, and OTHER crashes. It was then decided to run another query to include more Person, Location, and Unit Action elements in the query, in attempt to isolate these incidents. Another data file was exported to include Unit Action by Intersections. Those locations that included a Left-turn or U-Turn unit action code as ANGLE, HEAD-ON or OTHER were cross referenced with the original list of 934 intersections. K and A crashes for those miscoded were added to the associated K and A columns in the spreadsheet housing the 934 intersections. Those not included in the original 934 intersection spreadsheet were added provided that; 1) They exhibited base criteria outlined in Section III below, and 2) If the location exhibited unique conditions that may be used to formulate the left-turn crash mitigation guidance and template document. This resulted in an additional 30 locations added to the list for a total of 964.

IV. Regional Intersection Left-Turn Crash Analysis

The goal of this analysis is to identify those intersections with the greatest potential to benefit from positive offset implementation. A working group was formed to refine the project scope of work and provide input to how to move forward with the study. Invitations to participate in the working group were sent to the 17 local agency staff providing representation on the MAG Transportation Safety Committee, as well as staff from other local agencies with locations on the list of 934 intersections. The scope was refined to include further analysis of each of the intersections. The following elements were identified for the analysis to be performed by an on-call consultant:

A. Criteria for analysis of all intersection left-turn crashes

1. **E, W, N, S Existing offset condition (Zero, Negative, Positive)**
2. **E, W, N, S Left-turn signal phasing (Protected, Permissive, etc.)**
3. **Fatal and serious injury left-turn crashes, by Unit Action, for a minimum of 0K+2A, 1K+0A cross referenced with the list of 934 intersections. (See Note below)**
4. **Total Bicycle and Pedestrian involved left-turn crashes, cross referenced with the list of 934 intersections.**
5. **E, W, N, S road Curvature**
6. **Number of Opposing Thru Lanes**
7. **E, W, N, S Speed Limit**
8. **Signal Head Aligned with LT (Y/N)**
9. **Heavy Truck Traffic (Y/N) – Using the MAG Freight Study maps**
10. **Number of Signal Faces**
11. **E, W, N, S Vertical Median Width**
12. **E, W, N, S Stripped Median Width**
13. **Pedestrian Refuge in Median (Y/N)**
14. **Total LT Crashes Involving Bike/Ped**

Note: Fatal crashes (K) and serious injury crashes (A) as denoted in the KABCO crash severity scale. It was necessary to make the following assumption to develop a starting point: The minimum K and A crashes is based on what is required to result in a benefit cost ratio of 1.5 for providing left turn positive offset at an average estimated cost of $170,000. This is based on current ADOT HSIP eligibility guidance and recent project assessment for similar improvements.

The Working group included seven (7) local agency staff and one from the Arizona DOT. Working Group members were provided the spreadsheet to complete populating the excel sheet cells for 1) Existing offset condition and, 2) Left-turn signal phasing in the list above. MAG staff completed populating the cells for all other local agency intersections (i.e. those who did not participate in the Working Group having locations on the initial list) using Google maps. Some assumptions were made based on the left-turn signal equipment configuration displayed in Google maps. These can be further verified during the course of the study. This additional information on each intersection allowed the list of intersections to be reduced to 209 for those to be consideration for potential of inclusion in a multi-agency left-turn offset improvement spot project.

B. Criteria for implementation of positive offset left-turn lanes

1. Existence of opposing left turn lanes either E-W, N-S or both

2. A minimum total of K + A crashes (e.g. 1K + 0A or 0K + 2A)

3. Zero or negative offset in any leg of the intersection (improvements in one leg only will have a reduced cost.

4. Permissive or Protected-Permissive left-turn signal phasing

5. Single Left-turn lane configurations

6. Modifiable vertical median – Minimum 2 feet width raised curb for which a minimum length can be removed to create a positive offset.

The consultant completed review of each of the locations for modifiable median and roadway curvature and reduced the list to 120 locations for review of crash reports. Crash reports for each location were reviewed for 2011-2015, all collision types, Fatal (K) and Incapacitating Injury (A) Only. The goal of this exercise was to verify the miscoding of crashes as well as verify existence of the basic criteria to be consistent with the current Arizona DOT HSIP guidance. It is anticipated that these locations will move forward with further analysis in a Project Assessment phase for development of HSIP applications. The remaining locations will be reviewed as groupings of conditions and included in the guidance document and template to be provided to local agencies. Other considerations were made during further analysis of each of the 120 intersections with regard to recorded left-turn crashes involving bicyclists and pedestrians, among others as identified through further crash data analysis.

C. Methodology for identifying conditions for left-turn crash mitigation identification and guidance

This task included review of relevant documents and analysis of conditions for the remaining locations where implementing positive offset is not possible or impractical. This was accomplished by review of the most recent five years of crash reports for a sampling of intersections, grouped by similar conditions, as well as review of the following documents:

- SHRP2 findings from the Naturalistic Driving Study: Offset Left-Turn Lanes, 2014
- Intersection Sight Distance for Unprotected Left-turn Traffic, University of Florida, 2006

- Safety Evaluation of Offset Improvements for Left-Turn Lanes, Publication No. SHWA-HRT-090-035, June 2009
- Evaluation of Safety Strategies at Signalized Intersections, NCHRP 705, 2011
- Mitigation of Sight-Distance Problem for Unprotected Left-Turning Traffic at Intersections, TRB 1356, Joshua & Saka
- Current ADOT HSIP guidance document and HSIP project application

The key findings from this task were included in the recommendations developed for the Template and Guidance document produced as a secondary deliverable. In addition, the elements of the document review findings informed the next level of elements required for further analysis in order to develop preliminary planning for median modifications needed to implement positive offset. This provided a basis for estimated cost of improvements, as applied to the benefit cost ratio, to be used in the development of the region wide HSIP project application. Detailed review of the most recent five years of crash reports for each of the 120 intersections, in addition to input by local agencies for inclusion of current left-turn signal phasing and verification of current opposing left-turn lane conditions, further reduced the number of locations to be included in the region wide HSIP project application to 22 locations.

V. Conclusion

The methodology described herein was developed and utilized specifically for a review of signalized intersection crash data for an analysis period of five years for a region of nearly five million in population. The resulting locations and associated data was then further analyzed in order to identify specific locations that could benefit specifically from one particular countermeasure; providing left-turn positive offset with median modifications. Although the methodology could potentially be utilized in other regions or local agencies, caution should be taken to address key elements of this type of analysis. Examples of key elements include, but are not limited to: what the analysis is being used for, the amount, source and quality of data available, local conditions, existing policies and standards, and state and local Highway Safety Improvement Program funding guidance.