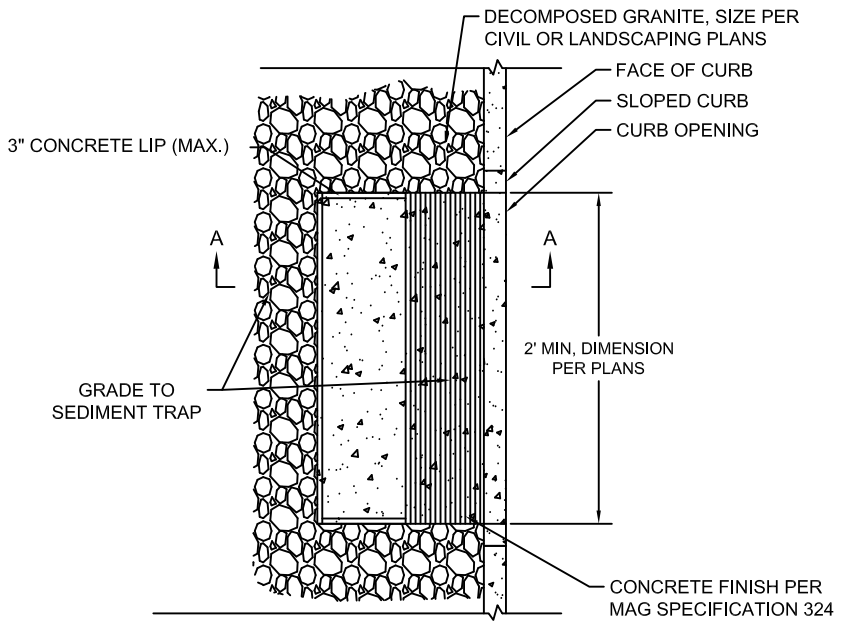

SEDIMENT TRAP PLAN VIEW

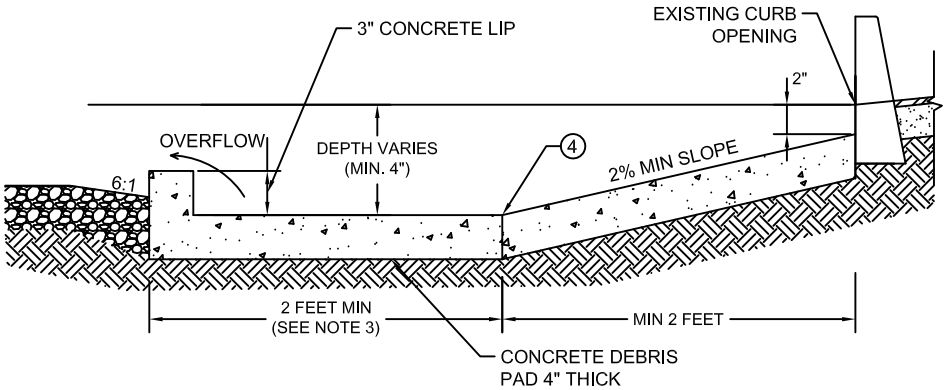

SECTION A-A

TYPE 1: SEDIMENT TRAP WITH CONCRETE SPILLWAY

NOTES:

1. DIMENSIONS OF SEDIMENT TRAP PER CIVIL PLANS.
2. SEDIMENT TRAP CAN BE PRECAST OR CAST IN PLACE CONCRETE.
3. DEBRIS PAD SHOULD BE DESIGNED TO CONTAIN HYDRAULIC JUMP (IF POSSIBLE).
4. EXPANSION/CONTRACTION JOINTS PER MAG STD SPEC 324.
5. RIPRAP SIZE AND DEPTH PER CIVIL PLANS, AND MAG SPECIFICATIONS 703.

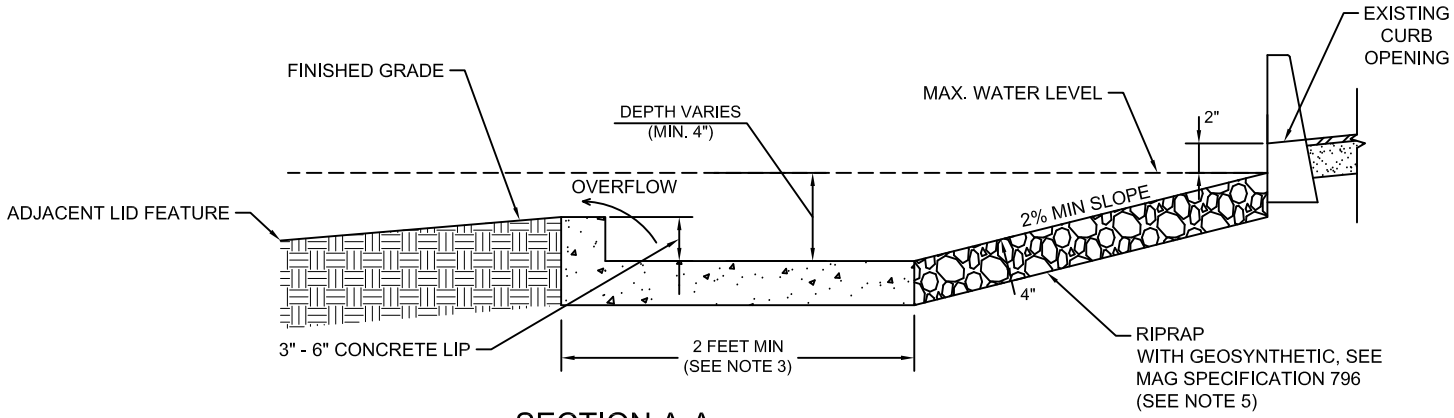

SECTION A-A

TYPE 2: SEDIMENT TRAP WITH RIPRAP SPILLWAY

DETAIL NO.	STANDARD DETAIL ENGLISH	SEDIMENT TRAPS	REVISED	DETAIL NO.
LID–04			01-29-2019	LID–04