SCT-21-01 Pav_Dynamite Rio Verde

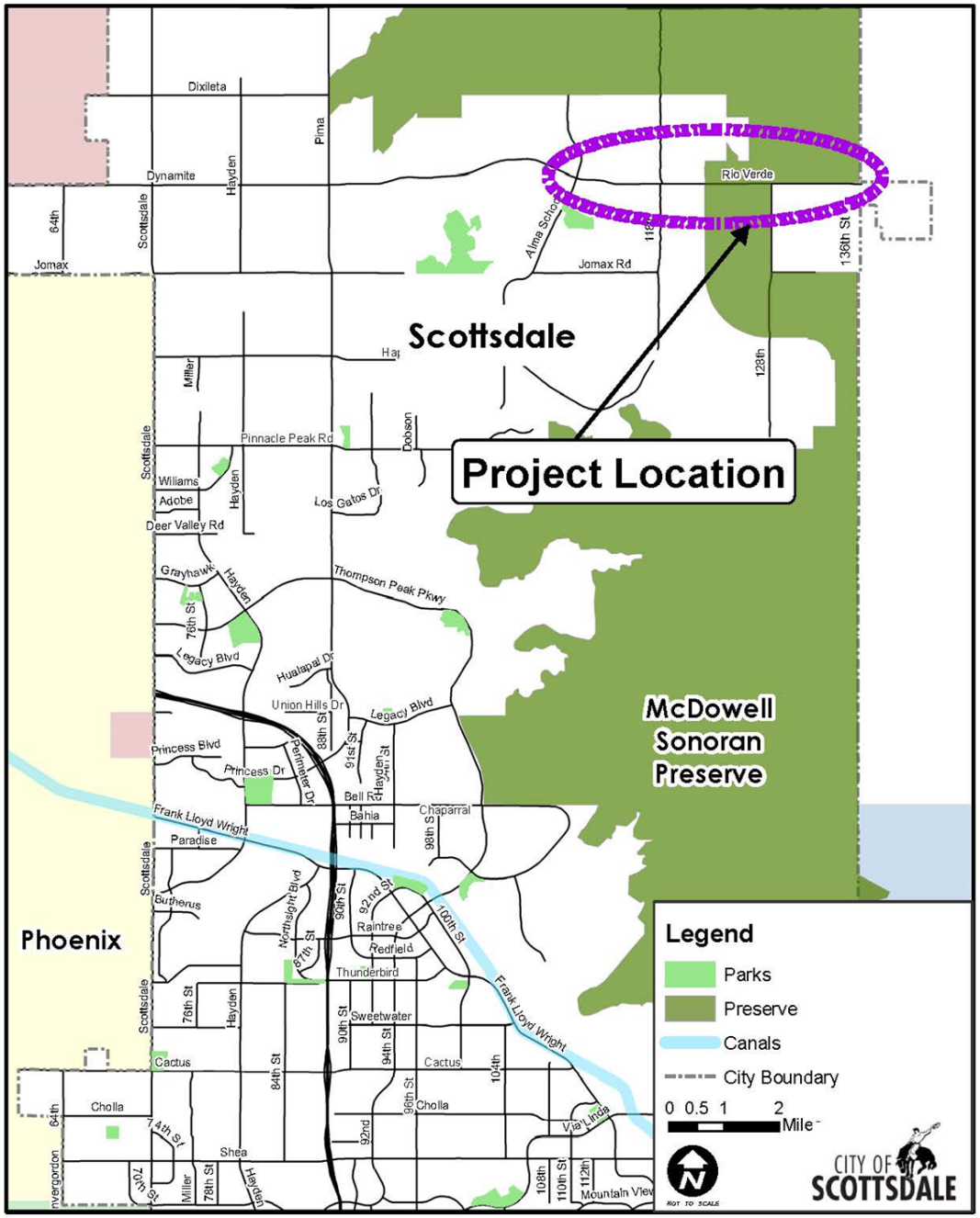

Document Path: V:\Transportation\Transportation\Workgroups\Transportation Planning&Transit\PATHS & TRAILS\BIKEWAYS\MAG CMAQ and TA\2021 and 2022\PM10\Dynamite Rio Verde\Area Map Dyamite Boulevard_ Rio Verde Drive Paved Shoulders.mxd

Date: 9/25/2017

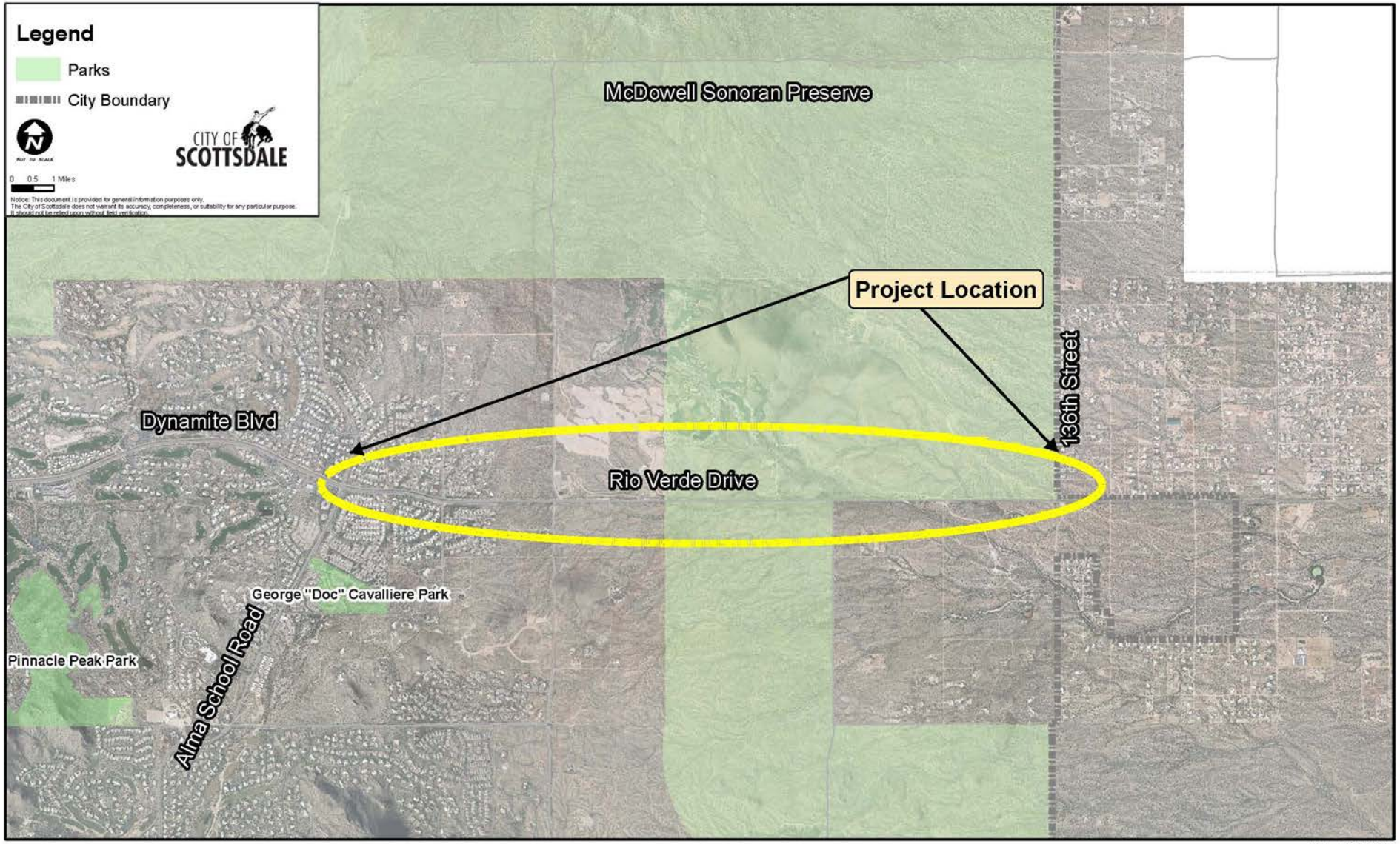

Document Path: V:\Transportation\TransportationWorkgroups\TransportationPlanning&Transit\PATHS & TRAILS\BIKEWAYS\MAG CMAQ and TA\2021 and 2022\PM10\Dynamite Rio Verde\Detailed Map Dynamite.mxd

Date: 9/25/2017

Scottsdale: Dynamite / Rio Verde Pave Shoulders
Part C – Attachment 3: Photos

Photo 1: Looking East bound at Alma School Road

Photo 2: Looking West bound at Alma School Road

Photo 7: Looking Eastbound at North 136th Street

Photo 8: Looking Westbound at North 136th Street

Scottsdale: Dynamite / Rio Verde Paved Shoulders
Part C – Attachment 3: Proposed Cross Section

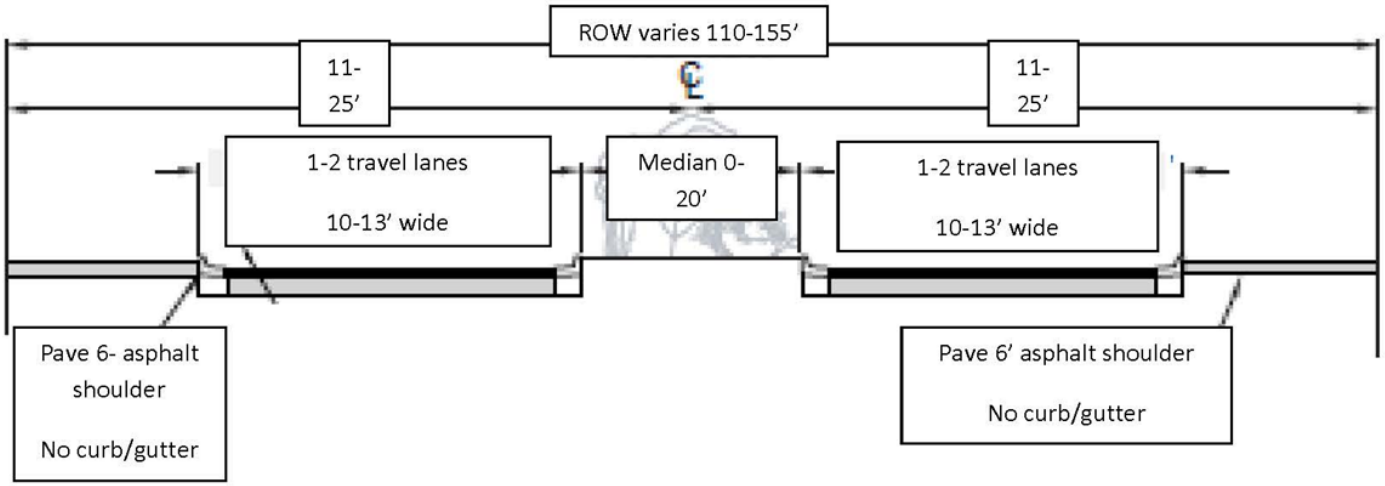

Qualifying Questions

- What existing improvement removal? What needs removed?