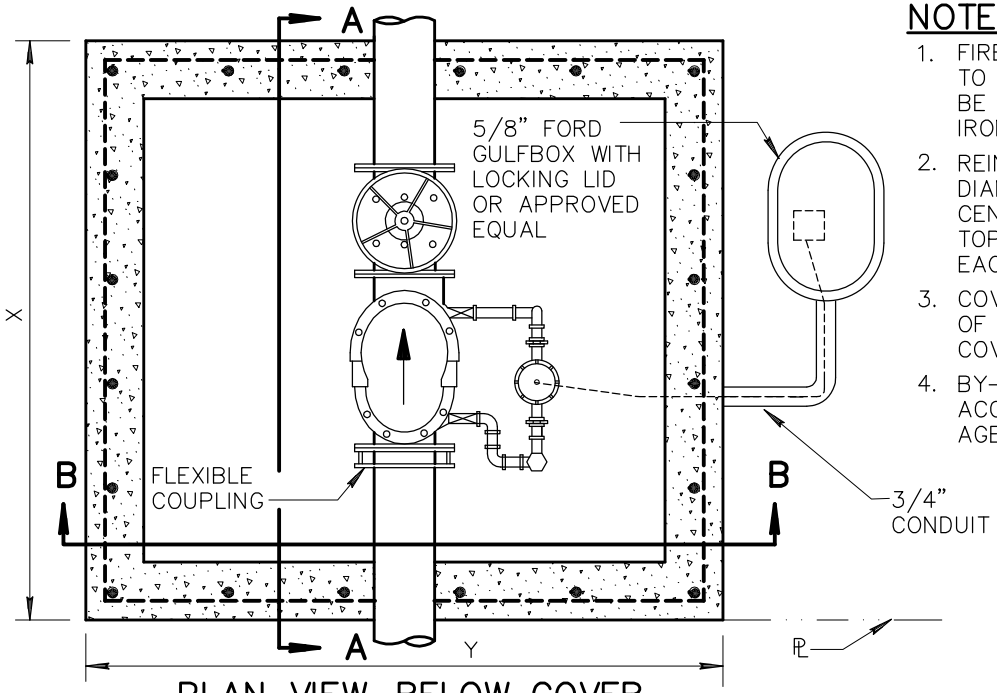

PLAN VIEW–BELOW COVER

NOTES:

1. FIRELINE FROM CITY MAIN TO PROPERTY LINE SHALL BE CONSTRUCTED OF CAST IRON PIPE.
2. REINFORCING TO BE 1/2" DIAMETER REBAR ON 6" CENTERS EACH WAY ON TOP AND 12" CENTERS EACH WAY ON THE SIDES.
3. COVERS TO CONSIST OF TWO METER BOX COVERS DET. 314.
4. BY–PASS METER TO BE ACCORDING TO GOVERNING AGENCY.
5. CHECK VALVE TO BE GLOBE MODEL "A" GRINNEL, HERSEY MODEL D.C., VIKING MODEL "A" OR APPROVED EQUAL.
6. VAULT SHALL BE CONSTRUCTED IN OWNERS PROPERTY AGAINST THE FRONT PROPERTY LINE OR ANOTHER APPROVED LOCATION. WALLS AND FENCES SHALL NOT OBSTRUCT ACCESS.
7. CITY CONTROL VALVE TO BE REQUIRED AT MAIN.
8. PARTS OF PIPE TO BE EMBEDDED IN CONC. SHALL BE WRAPPED WITH 30 LB ASPHALT ROOFING FELT.
9. REMOTE READING DEVICE SHALL BE OF SELF GENERATING ELECTRICAL TYPE. HYDRAULIC OR MECHANICAL DRIVE REGISTERS WILL NOT BE ACCEPTABLE.
10. CONCRETE TO BE CLASS 'B' PER SECT. 725.

DIA. OF PIPE	X	Y	Z	BY–PASS METER SIZE	A
4"	60"	66"	49"	5/8" x 3/4"	30"
6"	66"	72"	49"	5/8" x 3/4"	30"
8"	72"	72"	58"	1"	36"
10"	78"	72"	69"	1–1/2"	36"

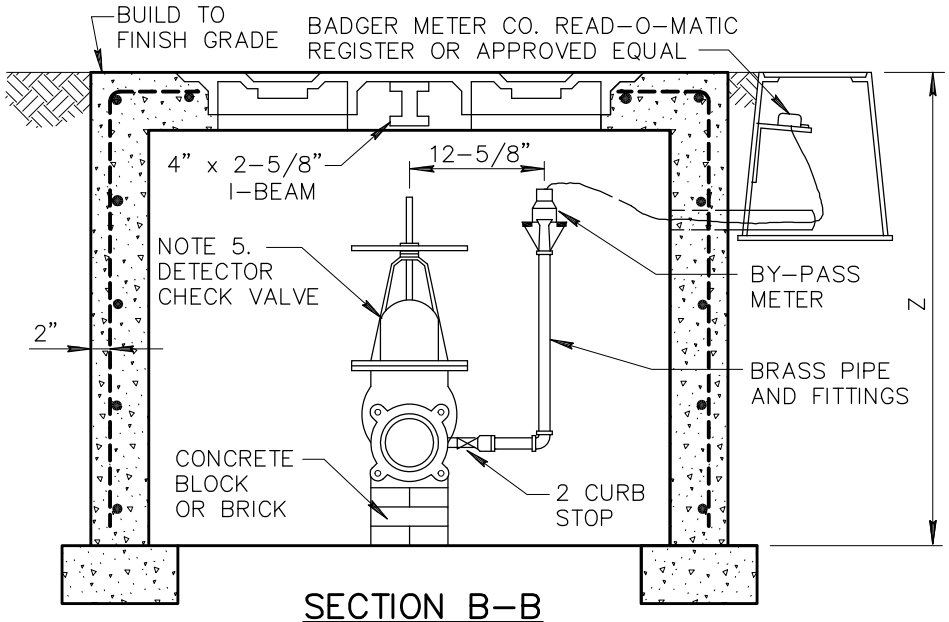

SECTION B–B

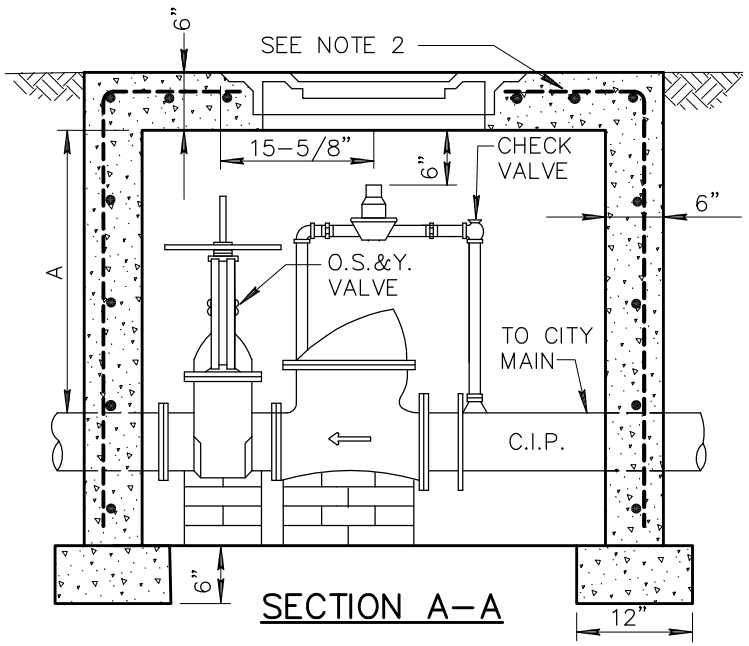

SECTION A–A

DETAIL NO.				REVISED	DETAIL NO.
346	MARICOPA ASSOCIATION of GOVERNMENTS	STANDARD DETAIL ENGLISH	FIRE LINE DETECTOR CHECK VAULT	01–01–1998	346