FY **2017**

US-60/Grand Avenue Sun City Implementation Study

Technical Memorandum

Prepared for:
Maricopa Association of Governments

Developed by:

BURGESS & NIPLE
Engineers ■ Planners

ADOT

CITY OF EL MIRAGE ARIZONA

MARICOPA COUNTY ARIZONA

PEORIA ARIZONA

TOWN OF YOUNGTOWN ARIZONA

MARICOPA ASSOCIATION of GOVERNMENTS

Table of Contents

1.0 Introduction 1
1.1 Study Overview 1
1.2 COMPASS Background 1
1.3 Study Area 3
2.0 Relevant Studies 7
2.1 Completed Studies 7
2.2 Completed Projects 7
2.3 Current Studies 7
2.4 Current Projects 7
2.5 Future Studies 8
2.6 Future Projects 8
3.0 Stakeholder Concerns 8
3.1 Emergency Responders 12
4.0 Existing Conditions 13
4.1 Existing Transportation Network 13
4.2 Existing Turning Movement Counts 21
4.3 Average Daily Traffic 23
4.3.1 Existing Corridor ADT and 2040 ADT Forecasts, Present Day 23
4.3.2 Past ADT Projections 25
5.0 Traffic Analysis 25
5.1 Methodology 25
5.1.1 MAG Travel Demand Model 26
5.1.2 Traffic Forecasting 26
5.1.3 Synchro Model 27
5.1.4 Select Link Analysis 28
5.2 Existing Conditions Results 28
6.0 Crash Analysis 30
7.0 Concept Development 34
7.1 COMPASS Alternatives 34
7.2 Ultimate Build Conditions 37
7.3 Conceptual Interim Solutions 37
7.3.1 111th Avenue and US-60/Grand Avenue 38
7.3.2 99th Avenue and US-60/Grand Avenue 42
7.3.3 US-60/Grand Avenue and SR-101L Right Turn Pocket 44
7.3.4 91st Avenue Alternative: Texas-U 46
7.3.5 91st Avenue Alternative: US-60/Grand Avenue Thru-Turns 49
7.3.6 91st Avenue Alternative: 91st Avenue Roundabout and Thru-Turn 52

7.3.7 91st Avenue Alternative: Dual Southbound Left Turn Lanes 54
8.0 Future Conditions Results 54
8.1 2040 Turning Movement Volumes 54
8.2 2040 Future No Build Traffic Analysis Results 56
8.3 2040 Future Build Traffic Analysis Results 57
8.3.1 111th Avenue and 99th Avenue Improvements Results 57
8.3.2 91st Avenue Alternative: Texas-U Results 59
8.3.3 91st Avenue Alternative: US-60/Grand Avenue Thru-Turn Results 60
8.3.4 91st Avenue Alternative: 91st Avenue Roundabout and Thru-Turn Results 60
8.3.5 91st Avenue Alternative: Dual Southbound Left Turn Lanes Results 61
9.0 Concept Evaluation 62
9.1 Level of Service Comparison 63
9.2 HCS7 Weave Analysis 66
9.3 Movement Delay 67
9.4 91st Avenue Alternatives Comparison 68
10.0 Implementation Plan 68
11.0 Conclusion 70

List of Figures

Figure 1 – Study Area Map 4
Figure 2 – Points of Interest 6
Figure 3 – Study Area Issues (West) 9
Figure 4 – Study Area Issues (East) 10
Figure 5 – 111th Avenue and US-60/Grand Avenue Southwest Corner, with Narrow Landscaping between Sidewalk and Businesses 15
Figure 6 – 99th Avenue and US-60/Grand Avenue Box Culvert on the north leg of 99th Avenue 16
Figure 7 – Sidewalk Break between 99th Avenue and SR-101L Ramps 17
Figure 8 – 91st Avenue and US-60/Grand Avenue Intersection 18
Figure 9 – 91st Avenue and Cactus Road Intersection with Traffic Queuing on Southbound 91st Avenue 19
Figure 10 – Signal Locations and Number of Lanes in Study Corridor 20
Figure 11 – Existing (2018) Turning Movement Counts 22
Figure 12 – Existing (2018) and Future (2040) ADT 24
Figure 13 – Crash Heat Map 33
Figure 14 – Blue Concept 6-Lane Typical Section 34
Figure 15 – Comparison of Study Area Corridor Recommendations 38
Figure 16 – 111th Avenue Phase 1 Improvements 40
Figure 17 – 111th Avenue Phase 2 Improvements 41
Figure 18 – 99th Avenue Proposed Improvements 43
Figure 19 – US-60/Grand Avenue Right Turn Pocket 45
Figure 20 – Texas-U at Union Hills and SR-101L 46
Figure 21 – Texas-U Design 48
Figure 22 – US-60/Grand Avenue Thru-Turn 50
Figure 23 – US-60/Grand Avenue Thru-Turn Eastern Loon Alternative 51
Figure 24 – 91st Avenue Roundabout and Thru-Turn 53
Figure 25 – Future (2040) Turning Movement Counts 55

List of Tables

Table 1 – LOS Thresholds for Signalized Intersections 27
Table 2 – 2018 AM & PM Peak Hour Capacity Analysis 28
Table 3 – Crash Distribution by Year and Severity 30
Table 4 – Crash Type for Fatal and Incapacitating Crashes 30
Table 5 – 2017 Statewide Average Comparison 31
Table 6 – 2040 No Build AM & PM Peak Hour Capacity Analysis 56
Table 7 – 2040 Future Build AM & PM Peak Hour Capacity Analysis 58
Table 8 – 91st Avenue Alternative: Texas-U 2040 AM & PM Peak Hour Capacity Analysis 59
Table 9 – 91st Avenue Alternative: US-60/Grand Avenue Thru-Turn 2040 AM & PM Peak Hour Capacity Analysis 60
Table 10 – 91st Avenue Alternative: Roundabout and Thru-Turn 2040 AM & PM Peak Hour Capacity Analysis 61
Table 11 – 91st Avenue Alternative: Dual Southbound Left Turn Lanes 2040 AM & PM Peak Hour Capacity Analysis 62
Table 12 – Comparison of AM Peak Hour Level of Service: 111th Avenue and 99th Avenue Improvements 63
Table 13 – Comparison of 91st Avenue Alternatives AM Peak Hour Level of Service 64
Table 14 – Comparison of 91st Avenue Alternatives PM Peak Hour Level of Service 65
Table 15 – Weave Analysis Results 66
Table 16 – Movement Delay Analysis 67
Table 17 – 91st Avenue Alternatives Comparison 68

List of Appendices

Appendix A – Meeting Summaries and Materials
Appendix B – Traffic Count Data
Appendix C – Synchro Output
Appendix D – Conceptual Alternatives Roll Plots
Appendix E – Conceptual Alternatives Parametric Cost Opinions

1.0 Introduction

The United States Route 60 (US-60)/Grand Avenue Sun City Implementation Study (Study) is being conducted by the Maricopa Association of Governments (MAG) to refine the recommendations from the US-60/Grand Avenue Corridor Optimization, Access Management Plan, and System Study (COMPASS) project by gathering additional feedback from the Study Project Partners and key stakeholders. The Study Project Partners include MAG, the Arizona Department of Transportation (ADOT), Maricopa County, Town of Youngtown (Youngtown), City of El Mirage (El Mirage), and City of Peoria (Peoria). Key stakeholders include emergency responders and Banner Boswell Medical Center (Banner Boswell).

1.1 Study Overview

US-60/Grand Avenue is a regionally significant six-lane highway in Arizona. The US-60/Grand Avenue COMPASS study proposed both 111th Avenue and 103rd Avenue to become grade separated flyover lanes with no connections to US-60/Grand Avenue. After completion of the US-60/Grand Avenue COMPASS in 2014, Youngtown and Banner Boswell in Sun City expressed concern that suggested improvements would negatively affect access to their facilities. The main access point into Youngtown is through 111th Avenue and the main access point to the emergency room of Banner Boswell is through 103rd Avenue. To address the concerns, Project Partners requested a supplemental study for the 3.6-mile segment of US-60/Grand Avenue between Thunderbird Road/Thompson Ranch Road in El Mirage and 91st Avenue in Peoria.

This Study is a high-level, feasibility investigation. The intent is to determine Project Partner priorities, gather input from emergency responders, develop potential feasible improvements for future detailed investigation, and identify potential fatal flaws in coordination with the Project Partners. Long-term strategies will improve connections across US-60/Grand Avenue and BNSF Railway while maintaining sufficient accessibility to US-60/Grand Avenue itself.

1.2 COMPASS Background

The MAG US-60/Grand Avenue COMPASS project, completed in 2014, was conducted to identify a long-term solution for accommodating travel demand and adjacent property access between the State Route 303 Loop (SR-303L) Traffic Interchange (TI) in the City of Surprise (reference marker 138.051) and Willetta Street at US-60X (reference marker 161.880) in the City of Phoenix. A key tenant of the US-60/Grand Avenue COMPASS Charter was the development of a vision through the year 2035 to serve as a framework for enhancing regional mobility while protecting the unique character of the US-60/Grand Avenue Corridor and the communities it serves. The 2035 Vision starts with a

statement articulating the desired approach to implementing multimodal transportation of the US-60/Grand Avenue Corridor and is framed by nine guiding principles that characterize the shared ambitions and objectives of future corridor improvements:

- Preserve and promote transportation capacity;
- Integrate multimodal transportation;
- Support and enhance economic growth;
- Advance safety and security;
- Establish a unified and coordinated approach to land use access;
- Promote a transit-supportive development pattern;
- Encourage coordinated aesthetics;
- Connect communities in a cost-effective manner; and
- Revise the partnering charter to extend through implementation.

Key objectives identified in the COMPASS Technical Memorandums include:

- Access management strategies to foster a balance between improved safety conditions and attracting new development;
- Geometric improvements (spot locations);
- Driveway consolidation (driveway density reduction – spot locations);
- Overlay zoning districts that correlate to the desired land uses and densities (specific locations or corridor);
- Transit stop accessibility (corridor level);
- Ordinance development (municipal); and
- Develop a Corridor Charter supported by Council Resolutions by all corridor municipalities that would provide a framework for the common understanding of issues and problems, document a set of goals, objectives, and define an agreed upon direction.

Planning and engineering considerations, based on input from corridor stakeholders and technical investigation, identified simplified traffic signal phasing and High Capacity Transit (HCT) technologies as underlying themes in development of the corridor concepts. HCT technologies considered for the corridor, in addition to the region's traditional Supergrid Bus System, were: Commuter Rail, Bus Rapid Transit (BRT), and Light Rail Transit (LRT).

Two Traffic Interchanges (TIs) were developed to reduce traffic signal phases within the US-60/Grand Avenue corridor: the Median Urban Diamond (MUD) TI and the Upstream Signalized Crossover (USC) intersection. The northwest-southeast alignment of US-

60/Grand Avenue, skewed relative to the Phoenix Metropolitan north-south and east-west arterial street grid system, results in five- and six-leg intersections, grade separated arterial interchanges, and a multitude of oblique, signalized, and stop controlled intersections. Signal timing cycles for the five- and six-leg intersections are often complicated and the wait times excessive, leading to the development of the MUDs and USCs.

Input provided by stakeholders, research completed by the study team, and the desired future vision of the corridor articulated by the Charter Partners led to the development of four concepts for US-60/Grand Avenue:

- Red Concept – Continue Regional Transportation Plan Improvements;
- Purple Concept – US-60/Grand Avenue Expressway;
- Blue Concept – Commuter Rail with Operational Improvements; and
- Green Concept – Other High Capacity Transit.

After discussions with stakeholders and Charter Partners, the Blue Concept was chosen as the guiding concept moving forward. The Blue Concept proposes three lanes for each direction of travel with a typical urban raised median, and BNSF/commuter rail to operate parallel and adjacent to US-60/Grand Avenue. Commuter rail operations would be conducted within the existing BNSF Railway right-of-way and would require substantial coordination with BNSF Railway freight movements, as well as additional capital investments to rail infrastructure. Several new or substantially improved, grade separated TIs were also identified in the COMPASS study area.

Access to properties along US-60/Grand Avenue would be limited to mostly right-in right-out access. Left-turns from US-60/Grand Avenue would be restricted where possible. Roadway efficiency would be further enhanced with the use of the MUDs and USCs as necessary at key intersections.

1.3 Study Area

The Study Area consists of the 3.6-mile segment of US-60/Grand Avenue between Thunderbird Road/Thompson Ranch Road in El Mirage and 91st Avenue in Peoria, illustrated in ***Figure 1***. This is a vital segment of US-60/Grand Avenue: it crosses both the Agua Fria River and New River and connects to the State Route 101 Loop (SR-101L). The Study Area is oriented northwest-southeast and includes the BNSF Railway running parallel and adjacent to the roadway on the roadway's northern edge.

Figure 1 – Study Area Map

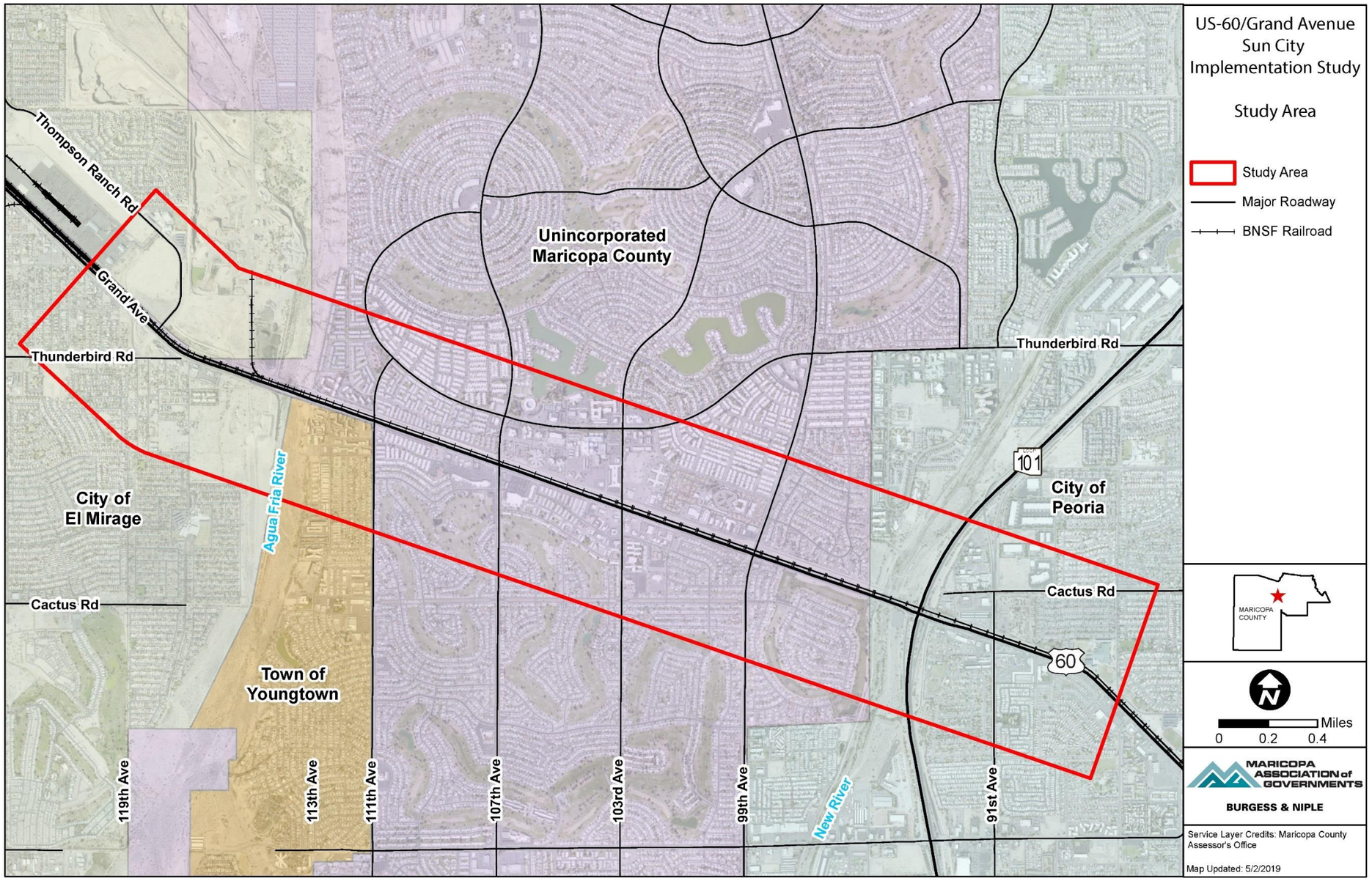

The US-60/Grand Avenue COMPASS recommendations included a series of grade separations in a strategy for meeting the travel demand while improving the ability to cross US-60/Grand Avenue and the BNSF Railway. The purpose of this Study is to build on the US-60/Grand Avenue COMPASS; the recommended roadway geometry will be further evaluated both horizontally and vertically, with stakeholder input, to identify an implementation process for programming long-range improvements to the MAG Regional Transportation Plan and Project Partners' Capital Improvement Plans.

The main points of interest in the Study Area include:

- Six major at-grade intersections (Thunderbird Road/Thompson Ranch Road, 111th Avenue, 107th Avenue, 103rd Avenue, 99th Avenue, and 91st Avenue);
- One existing TI (SR-101L);
- River crossings over both the Agua Fria River and the New River;
- BNSF Railway;
- Banner Boswell Medical Center campus;
- Sun City Fire and Medical Department stations; and
- Substantial residential and commercial development.

A map of the points of interest in the Study Area is included as ***Figure 2***.

Figure 2 – Points of Interest

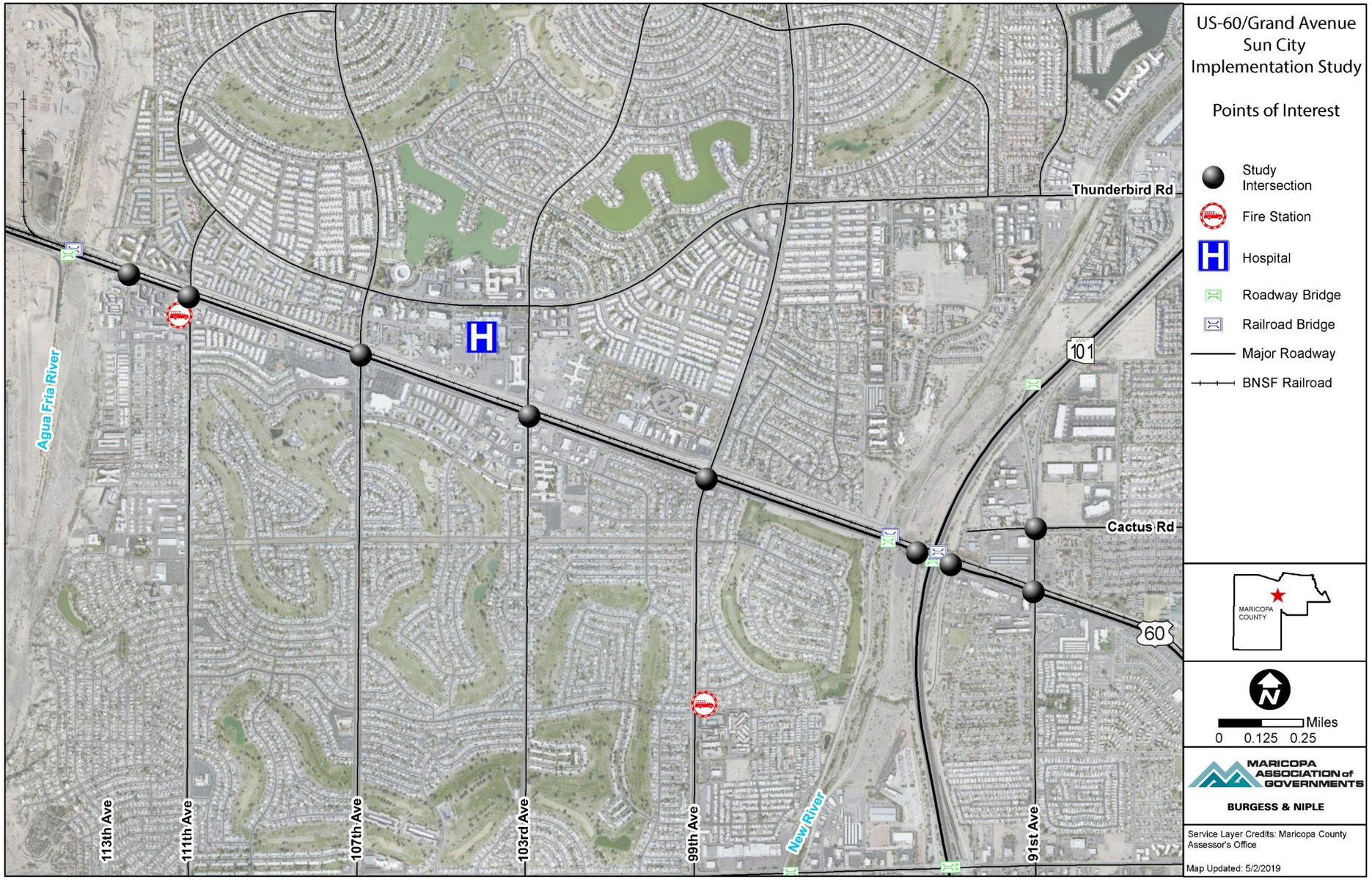

2.0 Relevant Studies

The project team obtained a variety of relevant studies and project data for the Study Area. "Studies" refer to projects where the final deliverable is a report, whereas "projects" refer to projects where the final deliverable is construction documents. Documents related to the studies and projects are available upon request.

2.1 Completed Studies

- Maricopa County Department of Transportation (MCDOT) TSP 2035 (2017);
- US-60/Grand Avenue Traffic Management Plan (2017);
- MAG Regional Commuter Rail System Study Update (2017);
- US-60/Grand Avenue COMPASS (2014);
- Youngtown General Plan 2025 (2014);
- MAG Central Phoenix Transportation Study (2013).

2.2 Completed Projects

- US-60/Grand Avenue and Thunderbird/Thompson Ranch Roads Intersection Improvements (2015).

2.3 Current Studies

- **MCDOT TSP 2040 (initiated 2019)**
  - MCDOT developed the Transportation System Plan 2040 (TSP) to help accomplish its core purpose, "Providing connections that improve people's lives." The purpose of the TSP is to provide a clear representation of the opportunities and constraints to achieve a well-connected transportation system that functions for all users, and the study includes the extents of the Study Area.
- **MCDOT 99th Avenue Improvements (initiated 2018)**
  - MCDOT is leading a planning study for various improvements to 99th Avenue, including sidewalks, drainage, and aesthetic appeal. The study area of the project overlaps the study area of this Study, but the project is still in planning stages. Any improvements being investigated as part of the MCDOT 99th Avenue Improvements study have not been included for consideration for this Study.

2.4 Current Projects

- US-60/Grand Avenue Frontage Road Reconstruction, between Greenway Road and Thompson Ranch Road (estimated completion summer 2019).

2.5 Future Studies

There are currently no known future studies with relevance to the Study Area.

2.6 Future Projects

- **ADOT Five-Year Transportation Facilities Construction Program (2018)**
  - ADOT developed the 2019-2023 Current Five-Year Transportation Facilities Construction Program to provide a framework for developing projects over the next five-year period. The purpose of the Program is to account for spending of funds on projects ready to advertise within two years of the Program or to establish implementation plans for projects still in preparation. The Program identifies a plan for the design of an additional general-purpose lane in both directions on SR-101L between the I-10 and US-60/Grand Avenue.

3.0 Stakeholder Concerns

The Kickoff Meeting took place on July 26, 2017, at MAG Cottonwood Conference Center, with representatives from Peoria, MCDOT, ADOT, and MAG. The meeting purpose was to introduce the Study, provide an overview of the background information, review Study Area issues, and identify qualitative evaluation considerations. Study Area issues included high traffic volumes, the limited number of Agua Fria River crossings in the vicinity, need for emergency vehicle access, and safety and operational concerns. These are shown graphically in ***Figure 3*** and ***Figure 4***. Project Partners stated that improvements developed for the Study should consider the non-vehicular users of the road network: cyclists, pedestrians and golf cart operators.

Figure 3 – Study Area Issues (West)

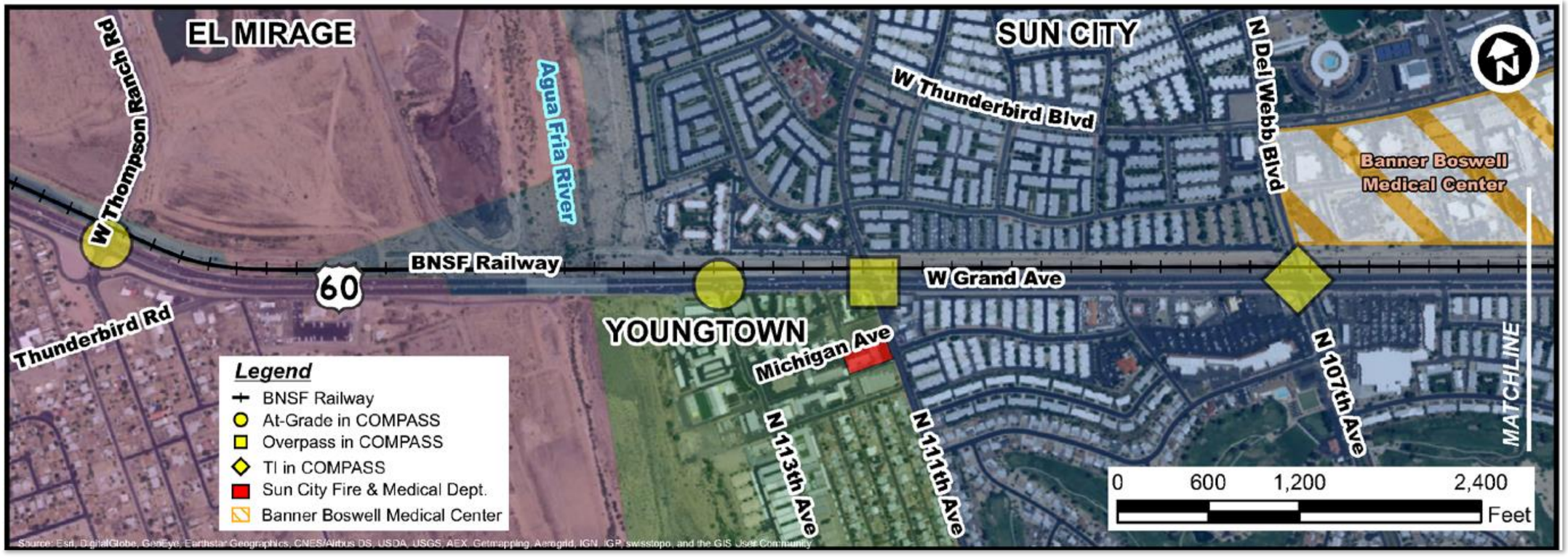

Figure 4 – Study Area Issues (East)

Meetings were held between MAG and stakeholders to discuss areas of interest, concerns, and conceptual recommendations. Meeting materials for each meeting, including agenda, presentation, and summary, are provided in **Appendix A**.

The following meetings were conducted:

- Kickoff Meeting – July 26, 2017
- Peoria – August 17, 2017
- Sun City HOA – October 24, 2017
- Youngtown – October 27, 2017
- Emergency Responders – October 31, 2017
- Peoria – November 1, 2017
- MCDOT – November 2, 2017
- ADOT – November 3, 2017
- Project Partners Meeting – December 13, 2018
- Project Partners Meeting – May 22, 2019
- Peoria – June 3, 2019

Peoria expressed concern about accommodating the high-volume southbound left-turn movement at the intersection of 91st Avenue and US-60/Grand Avenue. Peoria noted that the current configuration of the intersection, with its proximity to both the interchange with US-60/SR-101L (half-diamond TI to/from the south) and the interchange with 91st Avenue/SR-101L (half-diamond TI to/from the north), results in congestion-related crashes along 91st Avenue north of US-60/Grand Avenue. Peoria also expressed concern regarding the impact of a grade separation at 91st Avenue and US-60/Grand Avenue on nearby businesses and utilities. Peoria shared anecdotes about traffic exiting southbound SR-101L on the TI with 91st Avenue and making U-turns to double-back and enter northbound SR-101L due to the congestion on 91st Avenue.

Youngtown expressed concern over the proposed grade separation of 111th Avenue, which is the main access point into Youngtown, and noted that 113th Avenue is not configured in such a way to become Youngtown's main access point if access to 111th Avenue is eliminated. Youngtown has also recently completed construction of a new fire station located south of US-60/Grand Avenue, at the intersection of 111th Avenue and Michigan Avenue, and access to US-60/Grand Avenue is critical for response times.

MCDOT reiterated the County's concerns to maintain access to medical facilities and to include accessibility across US-60/Grand Avenue for pedestrians, bicyclists, golf carts,

and motorized wheelchairs. MCDOT expressed interest in improvements to roads running parallel to US-60/Grand Avenue, such as Cactus Road, Peoria Avenue, and Thunderbird Road, to reduce the demand on US-60/Grand Avenue. MCDOT also stated that 107th Avenue should be designed with golf cart crossings in mind.

ADOT stated that there are access and speed issues with the TI at Bell Road and US-60/Grand Avenue (north of the Study Area) because visual cues provide drivers indicators that they are driving on a freeway. Access to businesses immediately downstream of the turn lane/Grand Avenue gore points introduces problematic weaving. ADOT expressed interest in changing the classification of US-60/Grand Avenue from a freeway to an Arizona Parkway, which would feel more like an arterial to motorists.

Stakeholders reconvened at the Project Partners Meeting in December 2018 to discuss the prioritization of access and improvements and possible solutions to the Study Area corridor. As funding for the original COMPASS is limited, feasible interim solutions were proposed to address operations along the Study Area corridor while addressing the needs of the stakeholders.

Stakeholder met again in May 2019 for a second Project Partners Meeting, to review and discuss the proposed interim solutions. The concept that was originally investigated to potentially address operations at 91st Avenue, the Texas-U, fell short of expectations. The attendees discussed the need for additional follow up for potential solutions at 91st Avenue.

A follow up meeting with Peoria was conducted in June 2019 to address the need for potential solutions at 91st Avenue. Three additional alternatives were chosen for further investigation: Thru-Turn along US-60/Grand Avenue; roundabouts along 91st Avenue; and an additional southbound left turn lane on 91st Avenue.

3.1 Emergency Responders

A one-on-one meeting was conducted on October 31, 2017, with emergency responders in the Study Area. The emergency responders meeting included representatives from the Sun City Fire Department, Maricopa County Sheriff's Office (MCSO), and Banner Boswell. During the meeting the representatives provided their input on the suggested and proposed improvements to US-60/Grand Avenue in the Study Area.

Representatives from the Sun City Fire Department and MCSO indicated that maintaining full access from US-60/Grand Avenue to both 111th Avenue and 99th Avenue are critical to their operations. MSCO also indicated that 107th Avenue and 99th Avenue are key alternative routes for responders.

Banner Boswell staff indicated that emergency department access from US-60/Grand Avenue is off 103rd Avenue and the preferred emergency alternate route is through 107th Avenue/Del Webb Boulevard. The planned improvements to Banner Boswell do not include relocation of the emergency department access.

MSCO and the Sun City Fire Department also stated that there is anecdotal evidence of a significant number of golf cart crashes in Youngtown and Sun City.

Based on the input of the emergency responders, it was determined that the COMPASS-proposed grade separations of 111th Avenue and 103rd Avenue are extremely undesirable. A grade separated TI at 107th Avenue is considered acceptable to their operations.

Future improvements and programmed work will need to seek input from the local emergency responders to determine that proposed improvements will not negatively impact response times and access.

4.0 Existing Conditions

This section details the existing transportation network in the Study Area, the existing turning movement counts, and the existing average daily traffic counts and how they compare to past projections.

4.1 Existing Transportation Network

US-60/Grand Avenue is a six-lane, median-divided highway between Thunderbird Road/Thompson Ranch Road and 91st Avenue. The median allows for left-turn movements at intersections and other midpoints in the corridor. There is a bridge over the Agua Fria River northwest of 113th Avenue, and a bridge over New River northwest of the TI with SR-101L.

The interchange between US-60/Grand Avenue and SR-101L is a split-diamond interchange, with an on-ramp to southbound SR-101L from US-60/Grand Avenue, and an off-ramp to US-60/Grand Avenue from northbound SR-101L. Less than a mile to the north, the second half of the split-diamond interchange is at SR-101L and 91st Avenue.

An on-ramp connects 91st Avenue to northbound SR-101L, and an off-ramp connects southbound SR-101L to 91st Avenue. Anecdotal evidence shared by the Project Partners suggests that 91st Avenue becomes highly congested during the a.m. and p.m. peak hours as drivers attempt to navigate to SR-101L, US-60/Grand Avenue, or other locations south on 91st Avenue.

The Banner Boswell Medical Center campus is accessible from US-60/Grand Avenue from 103rd Avenue and 107th Avenue/Del Webb Boulevard. Commercial businesses are mostly clustered around the south side of the intersections with US-60/Grand Avenue, and some are also accessible from non-signalized right- and left-turns in the corridor.

Sun City is an active retirement community in an unincorporated section of Maricopa County. Arizona State law specifies that golf carts designed for and operated at no more than 25 miles per hour may be driven as close to the right-hand edge of a roadway as practical, provided that the roadway operates at speeds of 35 miles per hour or slower and that the driver is in an age-restricted community in an unincorporated area of a county with a population of more than 3 million people. Nearly all roads intersecting with US-60/Grand Avenue within the bounds of Sun City operate at 30 or 35 miles per hour, and local officials estimate that 40 to 50 percent of Sun City households use golf carts to travel. Golf carts are prevalent enough in the Study Area that Banner Boswell Medical Center has dedicated golf cart parking.

BNSF Railway runs parallel and adjacent to US-60/Grand Avenue and is at-grade with all intersections in the Study Area except for SR-101L. Delays caused by train crossings are a known issue, but activation of the crossings is not predictable enough to be of value.

Figures 5 through ***9*** depict existing conditions along the corridor within the Study Area.

Figure 5 – 111th Avenue and US-60/Grand Avenue Southwest Corner, with Narrow Landscaping between Sidewalk and Businesses

Figure 6 – 99th Avenue and US-60/Grand Avenue Box Culvert on the north leg of 99th Avenue

Figure 7 – Sidewalk Break between 99th Avenue and SR-101L Ramps

Figure 8 – 91st Avenue and US-60/Grand Avenue Intersection

Figure 9 – 91st Avenue and Cactus Road Intersection with Traffic Queuing on Southbound 91st Avenue

The existing signalized intersections and the number of the lanes for US-60/Grand Avenue and various cross streets are illustrated in ***Figure 10***.

Figure 10 – Signal Locations and Number of Lanes in Study Corridor

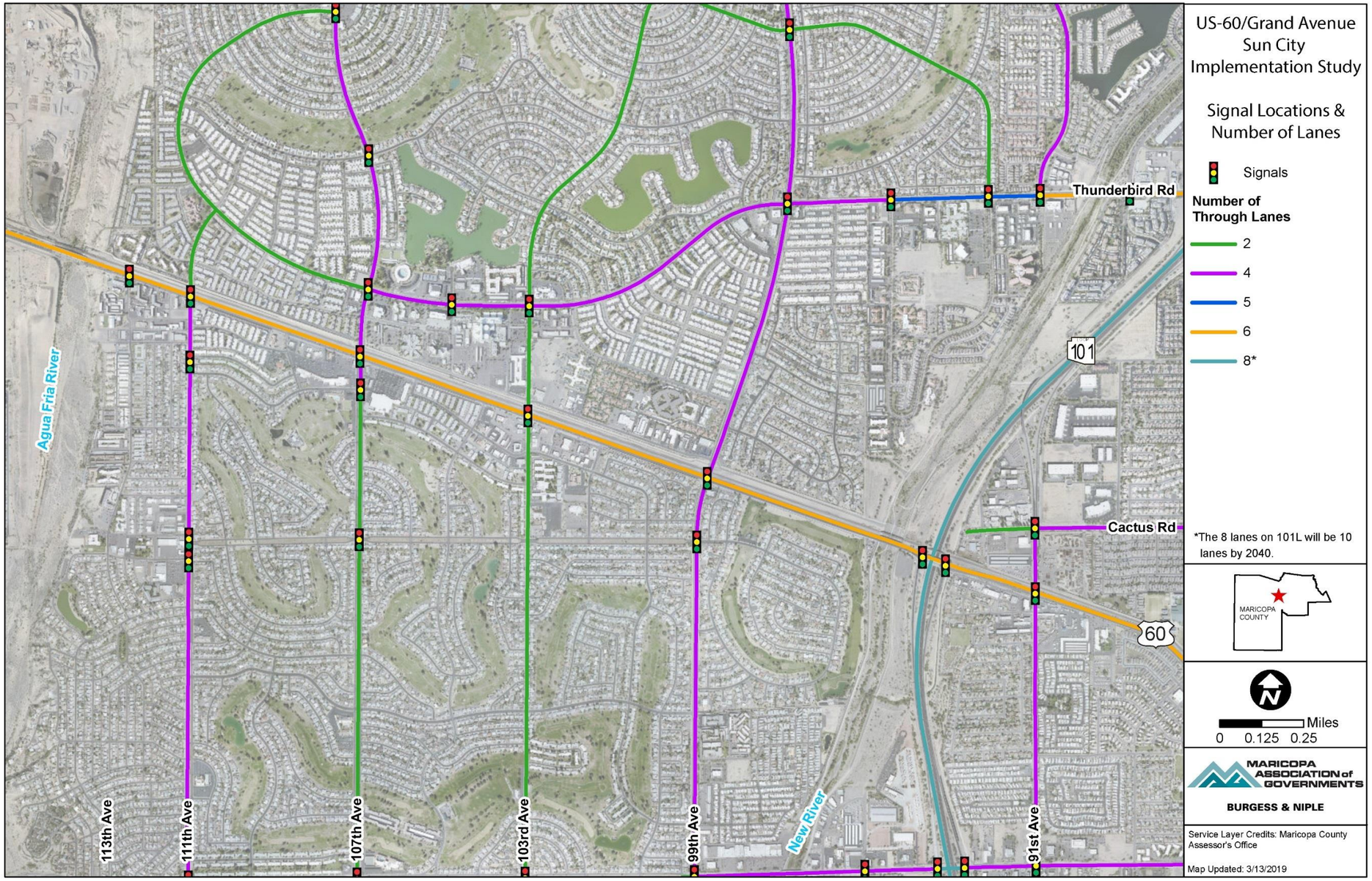

4.2 Existing Turning Movement Counts

Turning movement counts for the Study Area were collected on May 2, 2018, for the a.m. and p.m. peak hours. Generally, counts are collected when school is in session to capture typical weekday traffic patterns. However, a teacher labor stoppage coinciding with the count collection window for this Study closed all public schools in Arizona. Because of this, the traffic counts data collected were adjusted as if the counts had been collected in July. The traffic counts were grown by a factor of 3.3 percent to account for the abnormal data. The factor was a ratio of May 2016 traffic counts at 87th and US-60/Grand Avenue and July 2016 traffic counts at 87th and US-60/Grand Avenue, both provided by ADOT's Transportation Data Management System (TDMS). The final adjusted turning movement counts for the Study Area are shown on ***Figure 11***. More detailed traffic count data, including vehicle classification counts, is included in **Appendix B.**

Figure 11 – Existing (2018) Turning Movement Counts

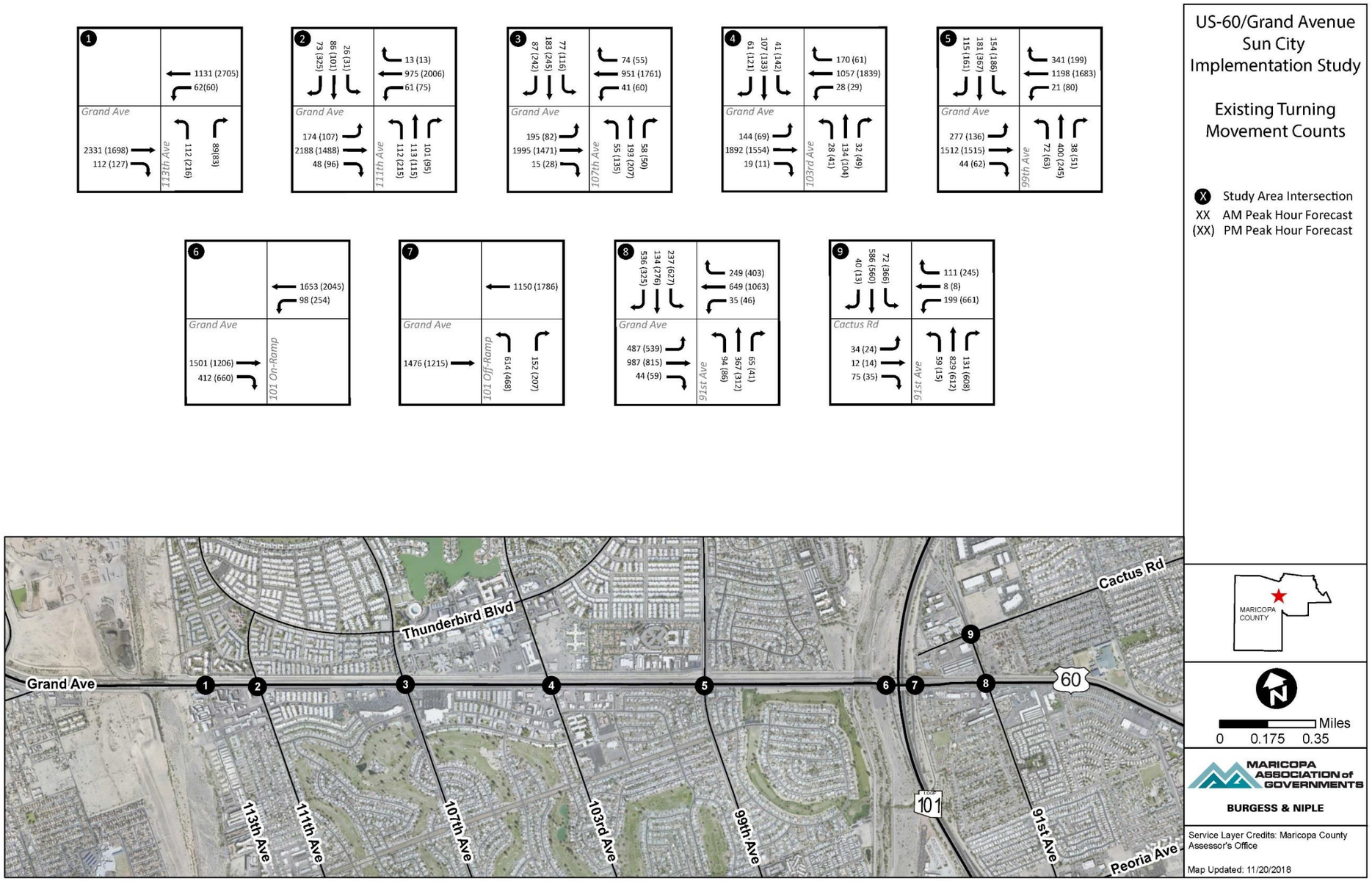

4.3 Average Daily Traffic

Existing and future year (2040) Average Daily Traffic (ADT) volumes were developed for the Study Area using the most recent available data. This section discusses the existing ADT along the corridor and the 2040 ADT forecasts performed for this Study, including the methodology used to determine ADT. This section also discusses the ADT projections made for previous studies of the US-60/Grand Avenue corridor, which differ significantly from current existing conditions and recent future traffic forecasts. Past ADT projections play an important role towards explaining the recommendations made in previous corridor studies, which analyzed future corridor conditions using significantly higher traffic projections than are realistic for today's traffic volumes and growth.

4.3.1 Existing Corridor ADT and 2040 ADT Forecasts, Present Day

The turning movement counts described in ***Section 4.2*** were collected over a six-hour period: three hours each over the a.m. and p.m. peak intervals. 24-hour volumes were derived from these six-hour counts using an adjustment factor calculated using online ADOT's TDMS data. Hourly counts were extracted from ADOT TDMS count stations in the Study Area, then counts for the same three-hour a.m. and p.m. peak intervals were summed together and divided by the total count to find the percent of total traffic occurring in those peak intervals. The percentage of total traffic occurring in the six-hour interval was compared and averaged among different locations to find one representative percentage of 39 percent for the Study Area corridor. The turning movements counts for each intersection were divided by the factor to grow them to 24-hour counts. Segment ADTs were calculated by appropriately summing the 24-hour turning movement counts. Then, future ADT was forecasted using the most recent MAG Travel Demand Model, following the procedures described in ***Section 5.1.1***. ***Figure 12*** shows the existing and future ADT for the Study Area corridor. Existing ADT is shown in black; future ADT is shown in red.

Daily traffic volumes for the Study Area are highest west of 111th Avenue and generally decrease moving east along the corridor. Existing daily traffic volumes along US-60/Grand Avenue in the Study Area ranged from 38,711 vehicles per day to 61,581 vehicles per day. Along the corridor, truck percentages ranged from 4.92 percent to 6.67 percent during the a.m. peak hour and 2.06 percent to 3.25 percent during the p.m. peak hour.

Figure 12 – Existing (2018) and Future (2040) ADT

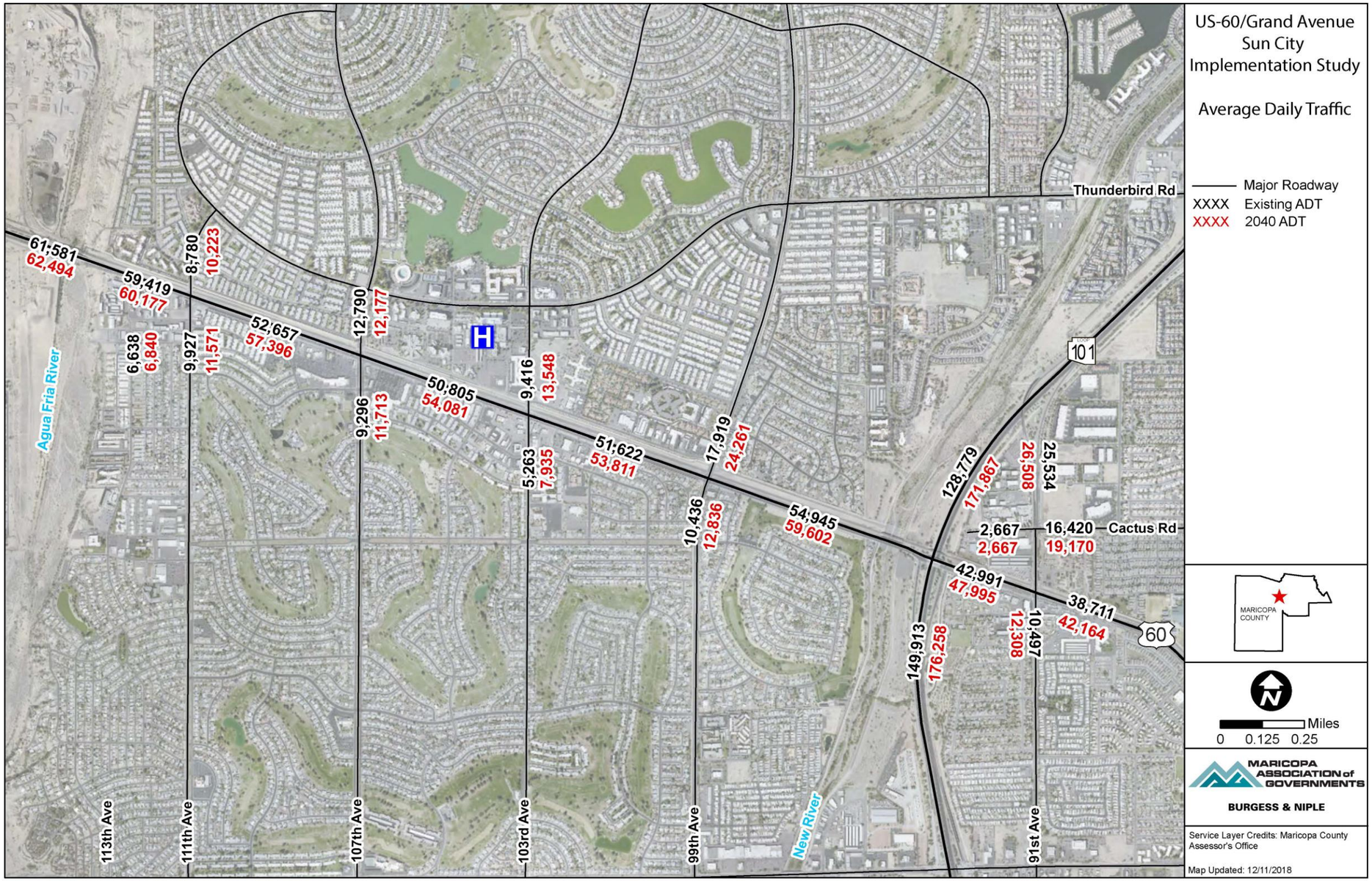

4.3.2 Past ADT Projections

Traffic projections for the US-60/Grand Avenue corridor between SR-303L and Willetta Street have undergone significant adjustments since 1985, when Proposition 300, a measure which included transforming US-60/Grand Avenue into a freeway, was passed. The *Grand Freeway Concept Finalization Report* (August 1989) projected 2010 traffic volumes in excess of 170,000 vehicles per day, a reflection of the region's intense growth and expected future growth at the time. Consequently, traffic forecasting performed in the 1980s significantly over-projected the actual traffic demand the region has experienced since.

A 2008 conformity run of the MAG TDM found the highest ADT on US-60/Grand Avenue corridor was 57,700 vehicles per day, approximately one-third of the original projected volume. In 2014, the US-60/Grand Avenue COMPASS project used the most recent MAG TDM to develop 2035 ADT projections, with volumes ranging from 42,200 vehicles per day to 91,600 vehicles per day.

2018 ADT volumes for the corridor range from 38,700 vehicles per day to 61,600 vehicles per day, and forecasts performed for this Interim Solution yielded 2040 ADT volumes ranging from 42,00 vehicles per day to 62,500 vehicles per day. Traffic forecasting is discussed in more detail in ***Section 5.1.2***.

5.0 Traffic Analysis

An operational analysis was performed for the Study Area using a combination of traffic forecasting and modeling techniques. Synchro software was used to assess the operations of intersections and TIs within the Study Area for the existing and future a.m. and p.m. peak hours. The analysis methodology, models, and results of the traffic analysis are described in this section.

5.1 Methodology

MAG Travel Demand Model data, discussed in ***Section 5.1.1***, was obtained for the Study Area for existing (2018) and future year (2040) scenarios. The data provided the existing and future ADT volumes necessary for traffic forecasting, a process which provided calibrated future ADT volumes and turning movement counts for the peak a.m. and p.m. periods, discussed in ***Section 5.1.2***.

Then, Synchro (Version 10.0) models were developed for a traffic Level of Service (LOS) analysis of existing and future no build conditions within the Study Area. Operational needs and potential improvements were identified using the future no build model, then

assessed with a future build condition model. This process is discussed in more detail in the following sections.

5.1.1 MAG Travel Demand Model

The MAG Travel Demand Model (TDM) is a regional 4-step model maintained by MAG and developed using the travel demand modeling software TransCAD. The Study Area lies completely within the MAG TDM, which was a critical tool to this Study for the development of future ADT projections and refined future turning volumes.

A TDM is often referred to as a "regional" model because the roadway network it represents typically spans multiple jurisdictions. TDMs are extensively calibrated and rooted in survey-informed population, employment, and socioeconomic data—all of which influence trip generation and mode choice. The MAG model has a land use component that includes socioeconomic information in the region disaggregated by traffic analysis zones (TAZ). Each TAZ in the region includes information about housing, population and employment. Land use estimates for the future are generally derived from Census data and regional estimates associated with improvements. To develop the future year land use data, MAG utilizes the land use elements of adopted general/comprehensive plans for cities and towns in the region. Future year MAG models also include all programmed and funded roadway improvements in the region. Therefore, model traffic projections consider planned improvements, new developments, and land use changes expected by a specified horizon year.

5.1.2 Traffic Forecasting

Future ADT and turning movement volumes for the Study Area were projected using forecasting methodology presented in *NCHRP 765 Report: Analytical Travel Forecasting Approaches for Project-Level Planning and Design*. The report and procedures outlined in the NCHRP 765 report largely derive from and improve upon the procedures outlined in a prior NCHRP publication, *Report 255: Highway Traffic Data for Urbanized Planning and Design*. The specific procedure used in the current study is an iterative turning movement estimation method which uses the combined Factoring Procedures for Ratio and Difference Methods in the NCHRP 765 Report.

The inputs required for post-processing model estimates using this method are:

- Base year traffic counts;
- Base year regional TDM estimates;
- Future year regional TDM forecasts; and.
- Design hour 30th highest K-factor.

The procedure adjusts the model forecasted link volumes using an iterative method to determine future turning movement volumes, using existing turning movement counts as a basis. A tolerance of 10 percent was used to determine the convergence of the iterative method. The iterative process is designed to minimize the errors identified in the existing year model estimates when compared to the observed traffic counts.

5.1.3 Synchro Model

Synchro (Version 10.0) models were developed for traffic analyses of existing and future conditions within the Study Area.

LOS is a qualitative measure of how well an intersection or roadway segment operates on a graded scale of A (best) to F (worse). LOS considers a variety of factors, including stability of traffic flow, opportunity for passing, and driver comfort. Operations of LOS D and better are typically considered acceptable in urban settings. Operations of LOS E or F may be flagged for improvement. For intersection analysis, LOS is determined using the total delay, in seconds, of vehicles which approach the intersection over the course of one traffic signal cycle. Intersections within the Study Area were analyzed using the LOS thresholds shown in ***Table 1***.

Table 1 – LOS Thresholds for Signalized Intersections

Control Delay	Level of Service
≤ 10 seconds	A
10 – 20 seconds	B
20 – 35 seconds	C
35 – 55 seconds	D
55 – 80 seconds	E
> 80 seconds	F

The traffic analysis was conducted using Synchro's built-in methodology. While *Highway Capacity Manual (HCM) 6th Edition* methodology is most commonly used to assess intersection LOS, it cannot assess intersections with unique signal timings or geometric configurations. The geometry of 91st Avenue and Cactus Road, with its shared and exclusive lanes, is one such example. For consistency, all results presented in this report were generated using Synchro's built-in methodology.

Timing plans were optimized in Synchro for both existing (2018) and future (2040) conditions. Plans were optimized to have cycle lengths between 90 and 120 seconds

and yellow and red times were incorporated based on the geometry of the intersection approach.

5.1.4 Select Link Analysis

Select link analysis was used to hand adjust model assignments so that more realistic paths were used. Select link queries and loaded network information were provided by MAG. Information in the select link analysis can be used to examine the entire model network to determine which links/zones contribute to trips on a certain link and how those trips depart from that link. Adjustments using select links were based on engineering judgement and best practice methods. The adjusted travel demand estimates were further refined in the second step using most recent traffic counts in the corridor.

5.2 Existing Conditions Results

A Synchro analysis assessing intersection operations within the Study Area was performed for the a.m. and p.m. peak hours. The results of the analysis are presented in ***Table 2***, with delay and LOS broken down by intersection approach and intersections listed in order from northwest to southeast. Intersections and approaches to intersections that operate at LOS E are highlighted in orange; those operating at LOS F are highlighted in red.

Table 2 – 2018 AM & PM Peak Hour Capacity Analysis

Intersection*	Approach	2018 AM Peak		2018 PM Peak	
		Delay (s)	LOS	Delay (s)	LOS
Intersection 1 113th Avenue & Grand Avenue	Eastbound	25.2	C	20.3	C
	Westbound	14.5	B	21.5	C
	Northbound	43.6	D	46.4	D
	Overall	**22.9**	**C**	**22.6**	**D**
Intersection 2 111th Avenue & Grand Avenue	Eastbound	68.5	E	55.9	E
	Westbound	17.7	B	117.2	F
	Northbound	33.5	C	77.3	E
	Southbound	29.3	C	162.7	F
	Overall	**50.4**	**D**	**95.8**	**F**
Intersection 3 107th Avenue & Grand Avenue	Eastbound	13.8	B	9.2	A
	Westbound	21.1	C	14.9	B
	Northbound	39.7	D	49.6	D
	Southbound	43.5	D	45.0	D
	Overall	**20.4**	**C**	**20.0**	**C**

Intersection*	Approach	2018 AM Peak		2018 PM Peak	
		Delay (s)	LOS	Delay (s)	LOS
Intersection 4 103rd Avenue & Grand Avenue	Eastbound	11.0	B	11.0	B
	Westbound	15.1	B	11.8	B
	Northbound	39.8	D	38.7	D
	Southbound	32.7	C	40.7	D
	Overall	**15.1**	**B**	**15.5**	**B**
Intersection 5 99th Avenue & Grand Avenue	Eastbound	18.1	B	25.5	C
	Westbound	63.9	E	56.0	E
	Northbound	54.6	D	45.3	D
	Southbound	52.9	D	48.0	D
	Overall	**42.4**	**D**	**43.0**	**D**
Intersection 6 SR-101L SB & Grand Avenue	Eastbound	3.5	A	5.3	A
	Westbound	3.9	A	7.1	A
	Overall	**3.7**	**A**	**6.3**	**A**
Intersection 7 SR-101L NB & Grand Avenue	Eastbound	24.4	C	23.3	C
	Westbound	20.9	C	26.0	C
	Northbound	22.3	C	19.1	B
	Overall	**22.7**	**C**	**23.8**	**C**
Intersection 8 91st Avenue & Grand Avenue	Eastbound	42.3	D	90.1	F
	Westbound	44.3	D	88.7	F
	Northbound	47.6	D	55.5	E
	Southbound	34.7	C	106.3	F
	Overall	**41.7**	**D**	**90.7**	**F**
Intersection 9 91st Avenue & Cactus Road	Eastbound	29.9	C	35.6	D
	Westbound	44.2	D	46.2	D
	Northbound	11.7	B	22.0	C
	Southbound	26.8	C	48.9	D
	Overall	**22.4**	**C**	**37.3**	**D**

*****Refer to **Figure 11** for a graphical depiction which utilizes the intersection numbers.*

During the existing a.m. peak hour, all intersections in the Study Area perform at an overall LOS D or better. The eastbound approach to the intersection of 111th Avenue and US-60/Grand Avenue and the westbound approach to the intersection of 99th Avenue and US-60/Grand Avenue both operate at LOS E, the overall LOS of service for the two intersections remains at LOS D.

During the existing p.m. peak hour, the US-60/Grand Avenue intersections with 111th Avenue and 91st Avenue operate at a failing LOS F, while the remaining seven intersections operate at LOS D or higher. The westbound approach to the intersection of 99th Avenue and US-60/Grand Avenue operates at LOS E, but the overall approach to the intersection remains at LOS D.

6.0 Crash Analysis

Crash data for the five-year period from January 1, 2013, to December 31, 2017, was obtained from the ADOT Accident Location Identification Surveillance System (ALISS) database for intersections along US-60/Grand Avenue. Within this period, 1,205 crashes occurred within the Study Area, not including the 91st Avenue and Cactus Road intersection. Crash distribution by year and severity is summarized in ***Table 3***. Fatal and incapacitating crashes are broken down by crash type in ***Table 4***.

Table 3 – Crash Distribution by Year and Severity

Year	Fatal	Incapacitating	Non-incapacitating Injury	Possible Injury	No Injury	Total
2013	1	6	28	44	179	258
2014	1	4	46	41	168	262
2015	2	4	25	41	140	212
2016	1	5	26	33	182	247
2017	0	3	26	46	153	228
Total	5	22	151	205	822	1,205

Table 4 – Crash Type for Fatal and Incapacitating Crashes

Crash Type	Fatal	Incapacitating
Single Vehicle	0	6
Angle	1	1
Left-Turn	1	2
Rear End	0	12
Head On	0	0
Sideswipe (same direction)	1	1
Pedestrian	1	0
Other	1	0
Total	5	22

An analysis of the fatal crashes showed:

- The five fatal crashes comprised 0.5 percent of total crashes in the project area.
- Four of the fatal crashes occurred at or near intersections along US-60/Grand Avenue.
- One fatal pedestrian crash occurred in the project area (>0.1 percent of total crashes).
    - The crash occurred in dark-not lighted conditions near US-60/Grand Avenue milepost 148.

The fatal pedestrian does not indicate if the pedestrian had exited a vehicle and was waiting on the side of the road. There were three possible injury or non-incapacitating injury pedestrian crashes within the Study Area in the five-year period. Three of the four pedestrian crashes occurred in dark-not lighted conditions. There was also one non-incapacitating bicycle crash in the Study Area within the five-year period.

Data on collision manner for all multi-vehicle crashes along US-60/Grand Avenue within the Study Area is presented in ***Table 5***. The table shows that rear end crashes were overwhelmingly the most common multi-vehicle crash type in the Study Area, followed same direction sideswipe crashes.

Table 5 – 2017 Statewide Average Comparison

Manner of Collision in Multi-Vehicle Crashes	US-60/Grand Avenue
Angle	6.6%
Left-Turn	4.0%
Rear End	**71.2%**
Head On	0.6%
Sideswipe (same)	**15.0%**
Sideswipe (opposite)	0.5%
Rear to Side	0.2%
Rear to Rear	0.0%
Other	1.7%
Unknown	0.3%

Rear end and same direction sideswipe crashes are typically associated with congestion on divided freeways and surface streets, due to the stop-and-go nature of traffic. A crash heat map showing the location and density of crashes is provided as ***Figure 13***. Crashes are largely concentrated around the intersections, but the red highlights on the

segments between 111th Avenue/107th Avenue and 99th Avenue/SR-101L, as well as the stretch to the highlights at 107th Avenue, 103rd Avenue, SR-101L, and 91st Avenue, indicate that many crashes are occurring on the outer extents of the intersections and nearer to the midpoints.

Figure 13 – Crash Heat Map

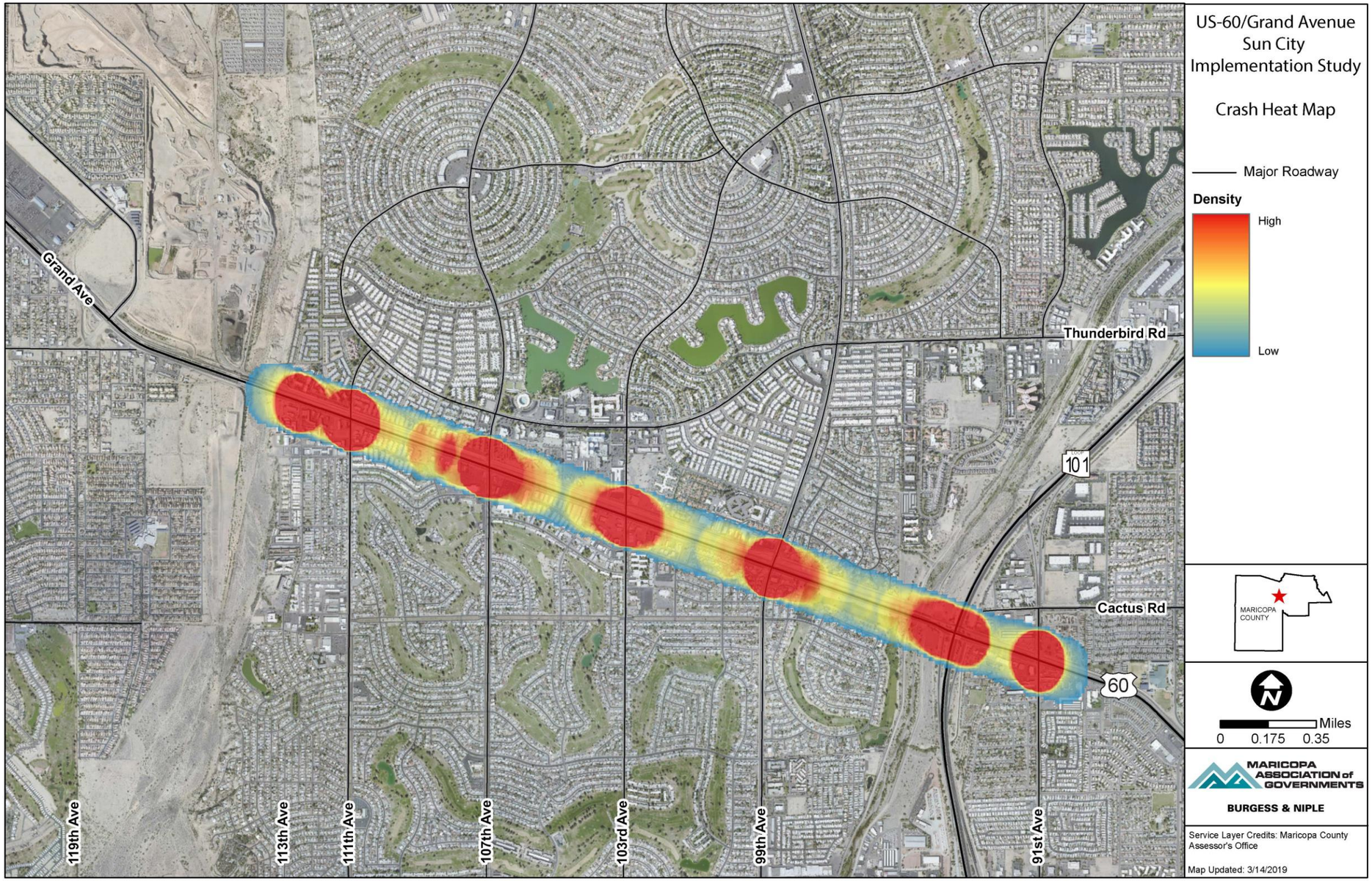

7.0 Concept Development

This section describes the development of possible design alternatives to the Study Area corridor. The section on the COMPASS Alternatives briefly describes improvements to the overall US-60/Grand Avenue corridor and the recommended improvements to intersections within the Study Area. The section on Interim Solutions details the new recommended improvements to 111th Avenue, 99th Avenue, and 91st Avenue based on the input of the Project Partners. Future traffic performance of the interim solutions is compared to future no build performance to determine the validity of the designs.

7.1 COMPASS Alternatives

The COMPASS Alternatives were proposed in the 2014 US-60/Grand Avenue COMPASS, based on the input from Project Partners for the corridor stretching between SR-303L and Willetta Street. The Preferred Corridor Concept from the COMPASS was the Blue Concept, or Commuter Rail with Operational Improvements. It implements commuter rail within the BNSF Railway right-of-way and includes new operational improvements to US-60/Grand Avenue, in addition to incorporating projects that are identified in the Regional Transportation Plan (RTP). The commuter rail would not make any stops within the extents of the Thunderbird Road/91st Avenue corridor. The generalized corridor typical section is shown in ***Figure 14***.

Figure 14 – Blue Concept 6-Lane Typical Section

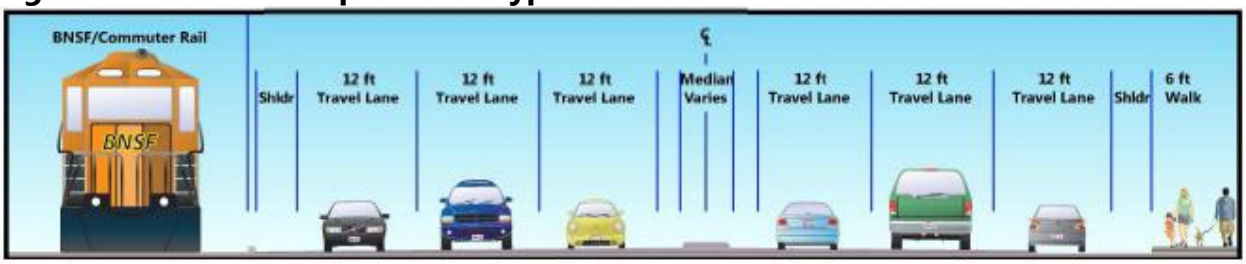

To implement Blue Concept across the full corridor from SR-303L to Willetta Street (reference marker 161.880), the planning level cost estimate is $837 million; roadway capital costs are estimated at $403 million of that total. The Grand Avenue Commuter Rail Corridor Development Plan estimated transit capital costs for Phase A at $434 million, including $31 million for right-of-way, and O&M costs of $7.4 million annually. Phase B capital costs are $600 million with O&M costs of $10.8 million annually. Phase C capital costs are $701 million with O&M costs of $50 million annually.

The COMPASS also identified other intersection improvements needed to prioritize uninterrupted traffic flow along US-60/Grand Avenue while minimizing potential

movement conflict points and reducing cycle length and signal phases. Public outreach and involvement will factor into the final decisions for the US-60/Grand Avenue corridor.

Within the extents of the Thunderbird Road/91st Avenue corridor, the COMPASS recommended improvements include:

Thompson Ranch Road/Thunderbird Road
The reconstruction of the Thompson Ranch Road/Thunderbird Road intersection was completed in 2015. The southwest leg of the intersection was widened to allow for dual left- and right-turns and two through lanes.

111th Avenue
The intersection at 111th Avenue is recommended to be grade separated and reconstructed as an overpass with no connections to US-60/Grand Avenue. 111th Avenue was identified as a crash hot spot and as having unacceptable existing traffic operations at LOS F. The turning movements from 111th Avenue will be accommodated via 113th Avenue and US-60/Grand Avenue, which is recommended to be modified at the same time to a continuous green T-intersection. Additional investigation and improvements will likely be necessary to accommodate increased traffic on 113th Avenue. Additional access to and from eastbound US-60/Grand Avenue is provided via 111th Drive, which would remain a right-in, right-out (RIRO) access.

Del Webb Boulevard/107th Avenue
The intersection at 107th Avenue is recommended to be grade separated as a MUD TI, with Del Webb Boulevard/107th Avenue depressed under US-60/Grand Avenue. Proximity of existing developments and right-of-way constraints led to the recommendation of a MUD TI. The operational analysis of the concept in the future shows the intersection will operate with an acceptable LOS in both the a.m. and p.m. peak hours.

103rd Avenue
Similar to 111th Avenue, the recommended 103rd Avenue intersection treatment is grade separation with no direct connections to US-60/Grand Avenue. This recommendation is consistent with prior recommendations for this location in previous studies. These improvements will improve traffic operations of US-60/Grand Avenue, accommodate substantial golf cart traffic, and provide faster emergency vehicle access to the medical facilities located on the north side of US-60/Grand Avenue. Four existing locations (Coggins Drive, 105th Avenue, 102nd Avenue, and 101st Avenue) will continue to provide eastbound US-60/Grand Avenue access to the area. The outbound access for

the westbound traffic on US-60/Grand Avenue will be provided via Santa Fe Drive and the 107th Avenue or 99th Avenue TIs.

99th Avenue

The intersection at 99th Avenue is recommended to be grade separated as a MUD TI. The MUD TI will grade separate 99th Avenue over US-60/Grand Avenue and the BNSF Railway. The existing segment of US-60/Grand Avenue between 99th Avenue and SR-101L was identified as the second worst operational segment for the corridor. The operational analysis of the concept in the future shows the overall intersection will operate at an acceptable LOS C of better in both a.m. and p.m. peak hours. Due to the MUD TI configuration and proximity of the TI to SR-101L, a weave analysis was conducted to ensure traffic operations would remain acceptable.

SR-101L TI

A new right-turn lane for eastbound US-60/Grand Avenue is recommended at the SR-101L TI ramp to improve operations and enhance the expressway-like character of the corridor. The SR-101L TI is a split-diamond interchange, with the US-60/Grand Avenue location providing access to and from the south on SR-101L. The north half of the split-diamond is located at 91st Avenue, which puts travel demand pressure on the 91st Avenue intersection with US-60/Grand Avenue. SR-101L is currently an underpass to US-60/Grand Avenue, and the BNSF Railway is at the same level as US-60/Grand Avenue, immediately to the north, putting constraints on the location. The travel demand model select link analysis indicated that high levels of local traffic use the SR-101L ramps at US-60/Grand Avenue to commute south via SR-101L to I-10 during the a.m. peak hour and in the reverse direction during the p.m. peak hour. The future operational analysis indicates an acceptable LOS B or better during both peak hours.

91st Avenue

The intersection at 91st Avenue is recommended to be reconstructed as a new TI with two-phase traffic signals on US-60/Grand Avenue. Travel demand modeling forecasts project high traffic volumes at this intersection. This intersection was also identified as a crash hot spot location. 91st Avenue provides access to and from the north on SR-101L. The concept grade separates 91st Avenue over US-60/Grand Avenue and the BNSF Railway and realigns US-60/Grand Avenue closer to the railroad. The concept includes a new one-way eastbound access road on the south side of US-60/Grand Avenue, provided access to 91st Avenue and the local area. Westbound traffic on US-60/Grand Avenue accesses 91st Avenue via a signalized wide U-turn movement onto the eastbound access road (Map Book intersection S88.1). 91st Avenue traffic access US-60/Grand Avenue via the one-way eastbound access road (Map Book intersection

S91.1). The operational analysis of the concept in the future shows the intersection will operate at an acceptable LOS C or better in both a.m. and p.m. peak hours. Careful consideration for clear and concise signing should be developed for this location.

7.2 Ultimate Build Conditions

After discussions with the Project Partners on the need and feasibility of the suggested alternatives outlined in the COMPASS, it was determined that the COMPASS preferred alternatives discussed in ***Section 7.1*** would place significant strain on the emergency responders and would restrict access into Youngtown. To address the concerns, a new Ultimate Build scenario was proposed with the following improvements:

- 113th Avenue will be reconfigured into a RIRO intersection;
- 111th Avenue will be reconstructed into a TI;
- 107th Avenue will be reconstructed into a grade separated overpass;
- 103rd Avenue will be reconstructed into a TI;
- 99th Avenue will be reconstructed into a TI;
- A dedicated right turn lane will be added to the SR-101L SB on-ramp; and
- 91st Avenue will be reconstructed into a TI.

Due to funding constraints, right-of-way impacts, and current traffic projections, the Project Partners directed the design team to investigate at-grade intersection solutions that would improve traffic operations to an acceptable level in the design year of 2040. These improvements would not supersede the Ultimate overpass and TI solutions, but would provide interim operational improvements until such time that the Ultimate Build Conditions could be constructed.

7.3 Conceptual Interim Solutions

Project Partners directed the design team to investigate at-grade intersection solutions that would improve traffic operations to an acceptable level in the design year of 2040. Using the information gathered during the meetings outlined in ***Section 3.0*** and with the adjusted 2040 ADT volumes determined in ***Section 4.3.1***, the following interim conceptual alternatives were based on:

- Background information and data developed by others;
- Input from stakeholders at the Kickoff Meeting;
- Input from stakeholders during one-on-one meetings; and
- Comments from the Project Partners Meeting.

To minimize impacts to surrounding developments and to keep funding costs low, the conceptual interim solutions were developed using performance-based practical design concepts to improve LOS while limiting costs and right-of-way impacts.

Figure 15 shows a high-level comparison of the alternatives suggested for the corridor from the COMPASS in ***Section 7.1***, the Ultimate Build in ***Section 7.2***, and the Conceptual Interim Solutions in ***Sections 7.3.1*** through ***7.3.7***. The interim solutions address the current and future need to improve traffic operations in the corridor but do not supersede the future overpass and TI recommendations.

Figure 15 – Comparison of Study Area Corridor Recommendations

7.3.1 111th Avenue and US-60/Grand Avenue

111th Avenue is functionally classified as a major collector roadway with allowed speeds of 35 mph. The intersection of 111th Avenue and US-60/Grand Avenue is a four-leg, signalized intersection with median dividers on US-60/Grand Avenue. The US-60/Grand Avenue roadway consists of three through lanes and a dedicated left-turn lane in both directions. The north leg of 111th Avenue consists of two through lanes for northbound

traffic, and a through-left and through-right lane for southbound traffic. BNSF Railway crosses the north leg. The south leg of 111th Avenue consists of two through lanes for southbound traffic, and three lanes for northbound traffic including a dedicated left-turn lane.

Improvements to the intersection are split into Phase 1 and Phase 2. Phase 1 improvements include dual left-turn lanes on US-60/Grand Avenue and northbound 111th Avenue; and adding dedicated right-turn and left-turn lanes on southbound 111th Avenue, with one through travel lane. The curb ramps and sidewalk will be updated to meet ADA compliance, and the median on US-60/Grand Avenue will include a pedestrian refuge. Golf carts will still be accommodated on 111th Avenue. Phase 2 improvements add a dedicated right-turn lane on northbound 111th Avenue.

Due to its proximity to 111th Avenue, proposed improvements to 113th Avenue include eliminating the left-turn movements and modifying the intersection to allow right-in, right-out movements only, and would be constructed at the same time.

Figure 16 illustrates the 111th Avenue Phase 1 improvements, and the Phase 2 improvements are illustrated in ***Figure 17***. Roll plots for the improvements are included in **Appendix D**.

Phase 1 improvements will impact an estimated 0.03 acres of right-of-way from four of the surrounding parcels with no anticipated total takes. Phase 2 improvements will impact an additional 0.06 acres of right-of-way from four of the surrounding parcels, with no anticipated total takes.

The improvements depicted in ***Figure 16*** are estimated to cost $4,878,500 in 2019 dollars. The improvements depicted in ***Figure 17*** are estimated to cost $256,500 in 2019 dollars. The estimate includes costs for construction, design, utility relocations, and right-of-way acquisitions. Parametric cost estimates are included in **Appendix E**.

Figure 16 – 111th Avenue Phase 1 Improvements

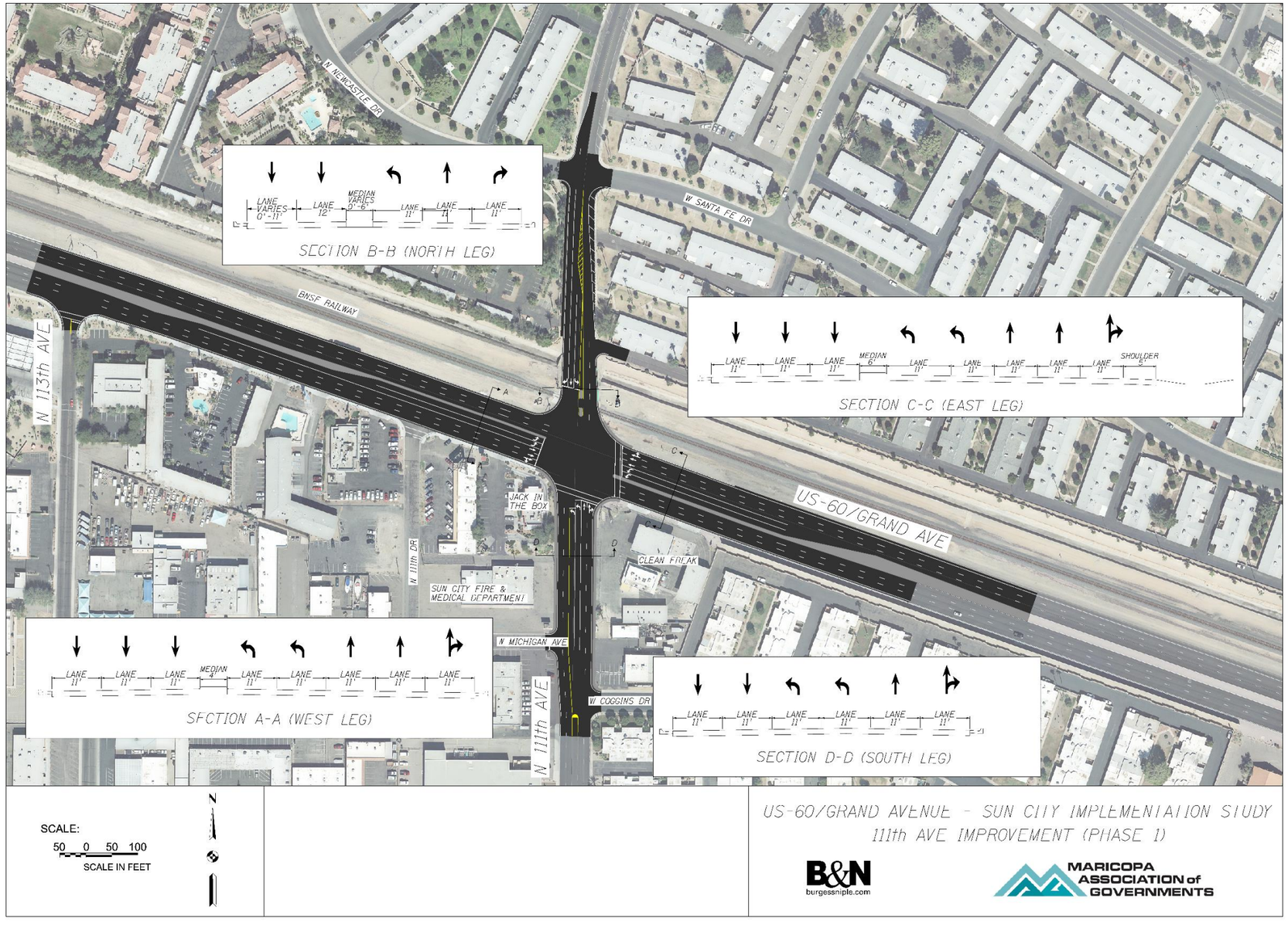

Figure 17 – 111th Avenue Phase 2 Improvements

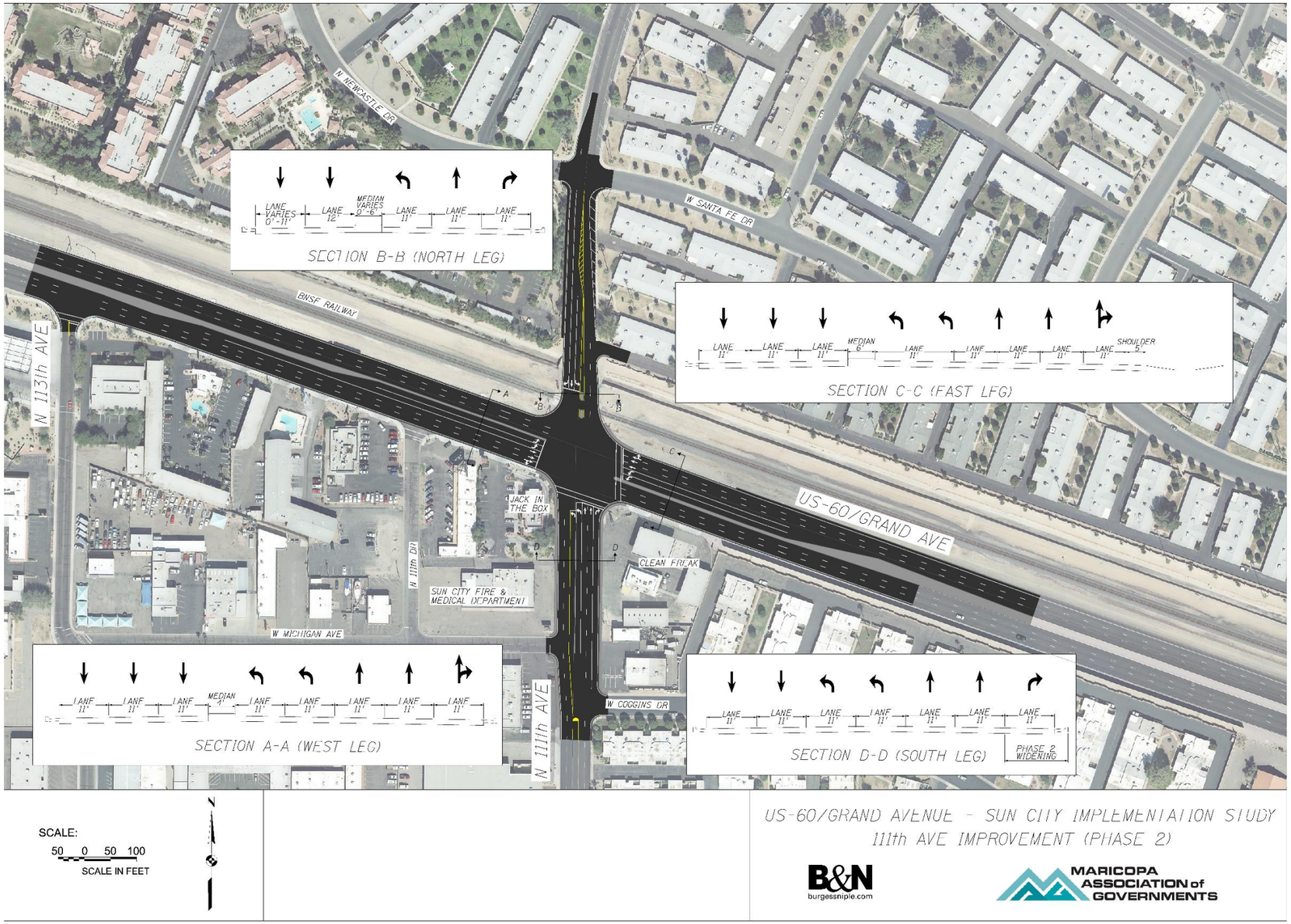

7.3.2 99th Avenue and US-60/Grand Avenue

99th Avenue is functionally classified as a minor arterial roadway with allowed speeds of 40 mph. The intersection of 99th Avenue and US-60/Grand Avenue is a four-leg, signalized intersection with median dividers on 99th Avenue and US-60/Grand Avenue. The roadway for US-60/Grand Avenue consists of three through lanes and a dedicated left-turn lane in both directions. The roadway for 99th Avenue consists of two through lanes, a dedicated left-turn lane, and a dedicated right-turn lane for both directions of traffic.

Improvements to the intersection include dual left-lanes on 99th Avenue and US-60/Grand Avenue and the addition of a dedicated right-turn lane on westbound US-60/Grand Avenue. Santa Fe Drive, located just north of the intersection, would be reconfigured into right-in, right-out. The curb ramps and sidewalk will be updated to meet ADA compliance, and the sidewalk on the south side of the intersection will be extended to close the gap in connectivity. The median on US-60/Grand Avenue will include a pedestrian refuge. Due to the posted speed on 99th Avenue, there are no accommodations for golf carts on the roadway.

MCDOT is currently investigating a corridor improvement study along 99th Avenue from Olive Avenue to Beardsley Avenue. Candidate alternatives include: the addition of bicycle and pedestrian accommodations through widened shoulders or installation of sidewalk; and improving the drainage basin that runs parallel to and north of the US-60/Grand Avenue. The recommended alternative of the MCDOT Study will be determined after the completion of this MAG Study; however, it is anticipated that the MCDOT Study recommended alternative will be constructed prior to the design and construction of the 99th Avenue and US-60/Grand Avenue intersection improvements. If the MCDOT 99th Avenue project is not constructed first, the MAG 99th Avenue intersection improvements should still consider and incorporate the recommendations for the active transportation infrastructure in the area.

Figure 18 illustrates the improvements to 99th Avenue. Roll plots for the improvements are included in **Appendix D**.

Improvements to 99th Avenue will impact an estimated 0.02 acres of right-of-way from two of the surrounding parcels. No total takes are anticipated.

The improvements depicted in ***Figure 18*** are estimated to cost $8,369,000 in 2019 dollars. The estimate includes costs for construction, design, utility relocations, and right-of-way acquisitions. Parametric cost estimates are included in **Appendix E**.

Figure 18 – 99th Avenue Proposed Improvements

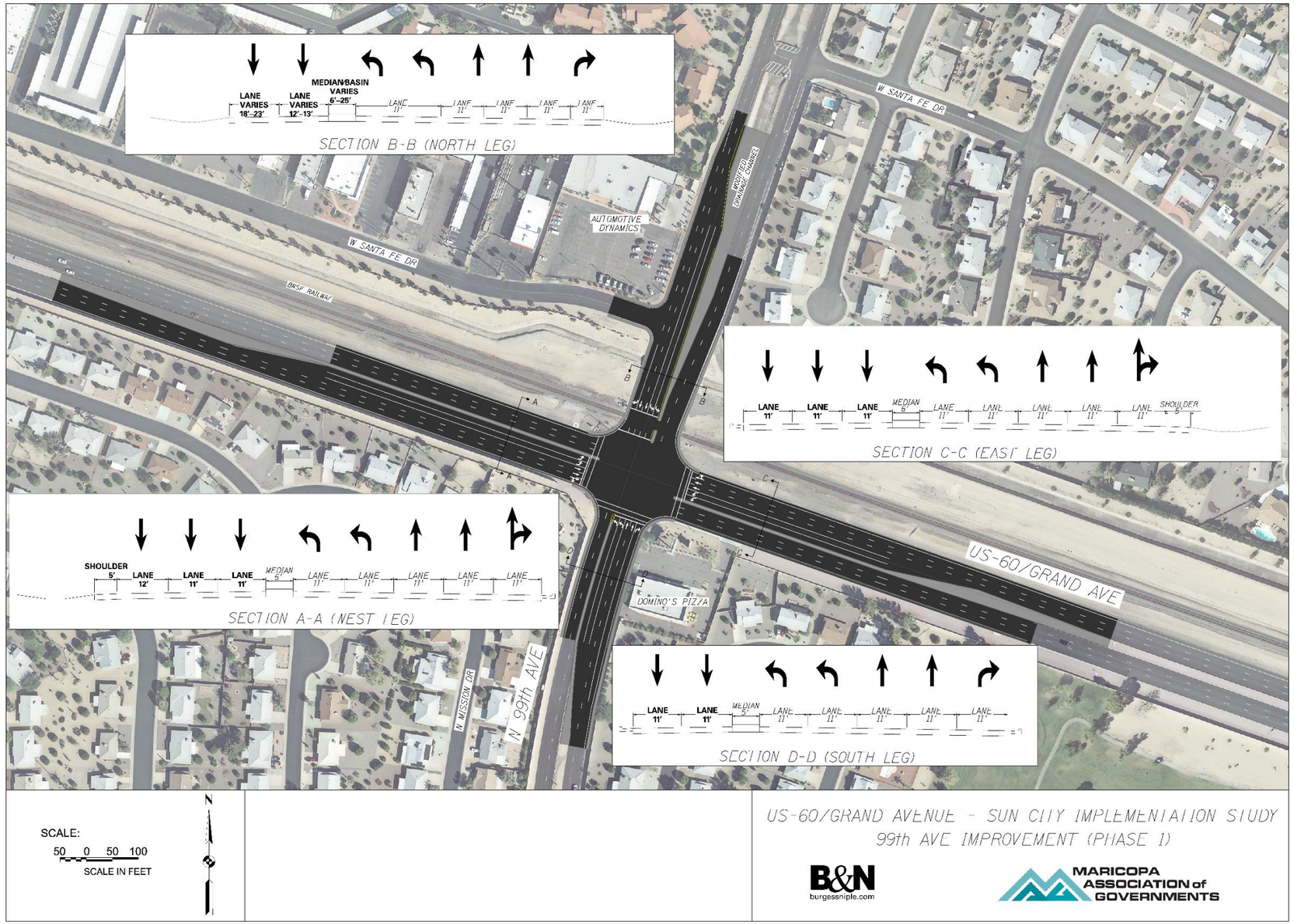

7.3.3 US-60/Grand Avenue and SR-101L Right Turn Pocket

For traffic traveling east on US-60/Grand Avenue towards SR-101L south, the turn onto the entrance ramp is currently configured as a through-right lane. Per the COMPASS-recommended alternatives in ***Section 7.1*** and the refined Ultimate Build Conditions alternatives in ***Section 7.2***, a right-turn pocket will be added to the entrance ramp to accommodate the anticipated future 2040 volume of traffic expected to turn onto the SR-101L without impeding the through traffic of the interchange. The right turn pocket is illustrated in ***Figure 19*** and is not expected to impact the right-of-way of the surrounding parcels. Roll plots for the improvements are included in **Appendix D**.

The improvements depicted in ***Figure 19*** are estimated to cost $503,500 in 2019 dollars. The estimate includes costs for construction, design, utility relocations, and right-of-way acquisitions. Parametric cost estimates are included in **Appendix E**.

Figure 19 – US-60/Grand Avenue Right Turn Pocket

7.3.4 91st Avenue Alternative: Texas-U

After the discussions with Project Partners in ***Section 3.0***, a Texas-U TI alternative was developed to address the concerns of congestion and accidents at 91st Avenue. A Texas-U is a lane allowing cars traveling on one side of a one-way frontage road to U-turn onto the opposite frontage road, and typically allows U-turning traffic to bypass two traffic signals and avoid crossing the local traffic. Peoria has successfully implemented a Texas-U configuration in the past, at the Union Hills Drive/SR-101L TI, to allow traffic from Beardsley Road access to the freeway.

Figure 20 – Texas-U at Union Hills and SR-101L

The Texas-U would be implemented at the Peoria Avenue/SR-101L TI, one mile south of the TI with US-60/Grand Avenue and SR-101L, and construction would include the removal of the southbound exit ramp to 91st Avenue from SR-101L. The Texas-U will allow for southbound SR-101L traffic to access US-60/Grand Avenue. Preliminary design shows that the addition of the new lane for the U-turn is feasible with the existing overpass structure. The exit ramp from southbound SR-101L onto Peoria Avenue will be reconfigured to allow for the addition of a drop decision lane for the Texas-U. The entrance ramp to northbound SR-101L will be reconfigured to have one receiving lane for turning traffic and one lane for the Texas-U. The conceptual design is illustrated in ***Figure 21***. Roll plots for the improvements are included in **Appendix D**.

The addition of the Texas-U at Peoria Avenue is not expected to impact the surrounding right-of-way. The removal of the exit and entrance ramps at 91st Avenue is also not expected to impact the surrounding right-of-way.

A weave analysis was performed for the roadway segment between Peoria Avenue and US-60/Grand Avenue, analyzing both a scenario where the Texas-U is built and a scenario where it is not. The results of the analysis are discussed in detail in ***Section 9.2***.

The improvements depicted in ***Figure 21*** are estimated to cost $7,300,000 in 2019 dollars. The estimate includes costs for construction, design, utility relocations, and right-of-way acquisitions. Parametric cost estimates are included in **Appendix E**.

Figure 21 – Texas-U Design

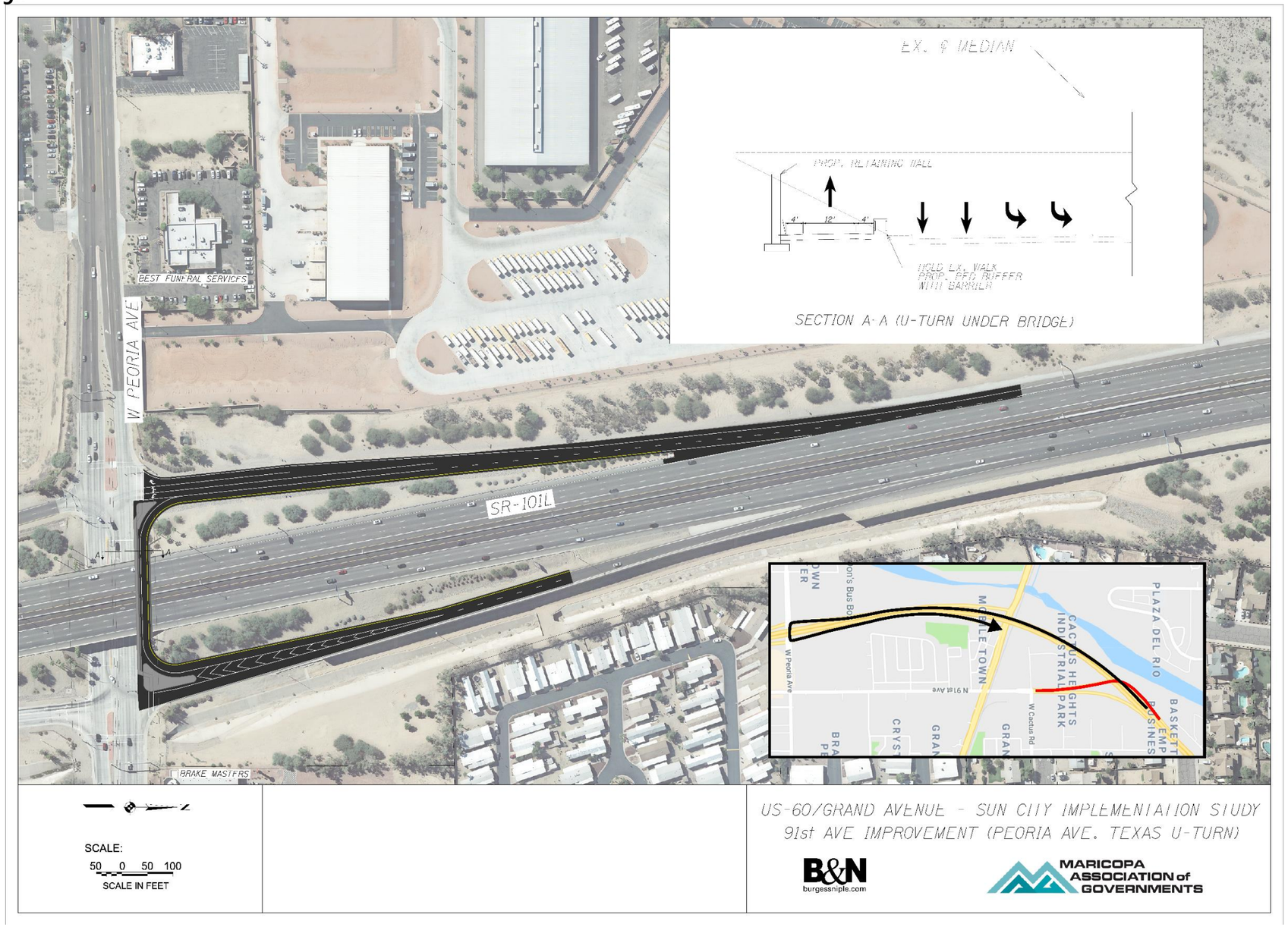

7.3.5 91st Avenue Alternative: US-60/Grand Avenue Thru-Turns

After the discussions with Project Partners in ***Section 3.0***, a Thru-Turn alternative was developed to address the concerns of congestion and accidents at 91st Avenue. The Thru-Turn concept displaces the left turn movement at the intersection to a queue lane for a designated U-turn away from the main intersection. To accommodate the U-turn movement, a loon is added for trucks and other vehicles making wider turns. Thru-Turn intersections have been implemented in Arizona at two locations in Tucson: (1) Grant Road and Oracle Road and (2) Ina Road and Oracle Road.

The Thru-Turn would be implemented on US-60/Grand Avenue to eliminate all left turns from the US-60/Grand Avenue intersection with 91st Avenue. Left turns from eastbound US-60/Grand Avenue to northbound 91st Avenue or from northbound 91st Avenue to westbound US-60/Grand Avenue are directed to a two-lane signalized U-turn east of the main intersection along US-60/Grand Avenue. Left turns from westbound US-60/Grand Avenue to southbound 91st Avenue or from southbound 91st Avenue onto eastbound US-60/Grand Avenue are directed to a one-lane signalized median U-turn west of the main intersection along US-60/Grand Avenue. The locations and configurations of the Thru-Turns and the loons are illustrated in ***Figure 22***. The anticipated traffic performance is detailed in ***Section 8.3.3***. Roll plots for the improvements are included in **Appendix D**.

An alternate loon configuration for the loon to the east of 91st Avenue is included in ***Figure 23***. This loon configuration impacts additional right-of-way but does not require eastbound US-60/Grand Avenue traffic to stop while vehicles are completing a U-turn. It was not developed further due to the right-of-way impacts.

The Thru-Turn on US-60/Grand Avenue will impact an estimated 0.78 acres of right-of-way from six of the surrounding parcels. No total takes are anticipated.

The improvements depicted in ***Figure 22*** are estimated to cost $7,588,000 in 2019 dollars. The estimate includes costs for construction, design, utility relocations, and right-of-way acquisitions. Parametric cost estimates are included in **Appendix E**.

Figure 22 – US-60/Grand Avenue Thru-Turn

Figure 23 – US-60/Grand Avenue Thru-Turn Eastern Loon Alternative

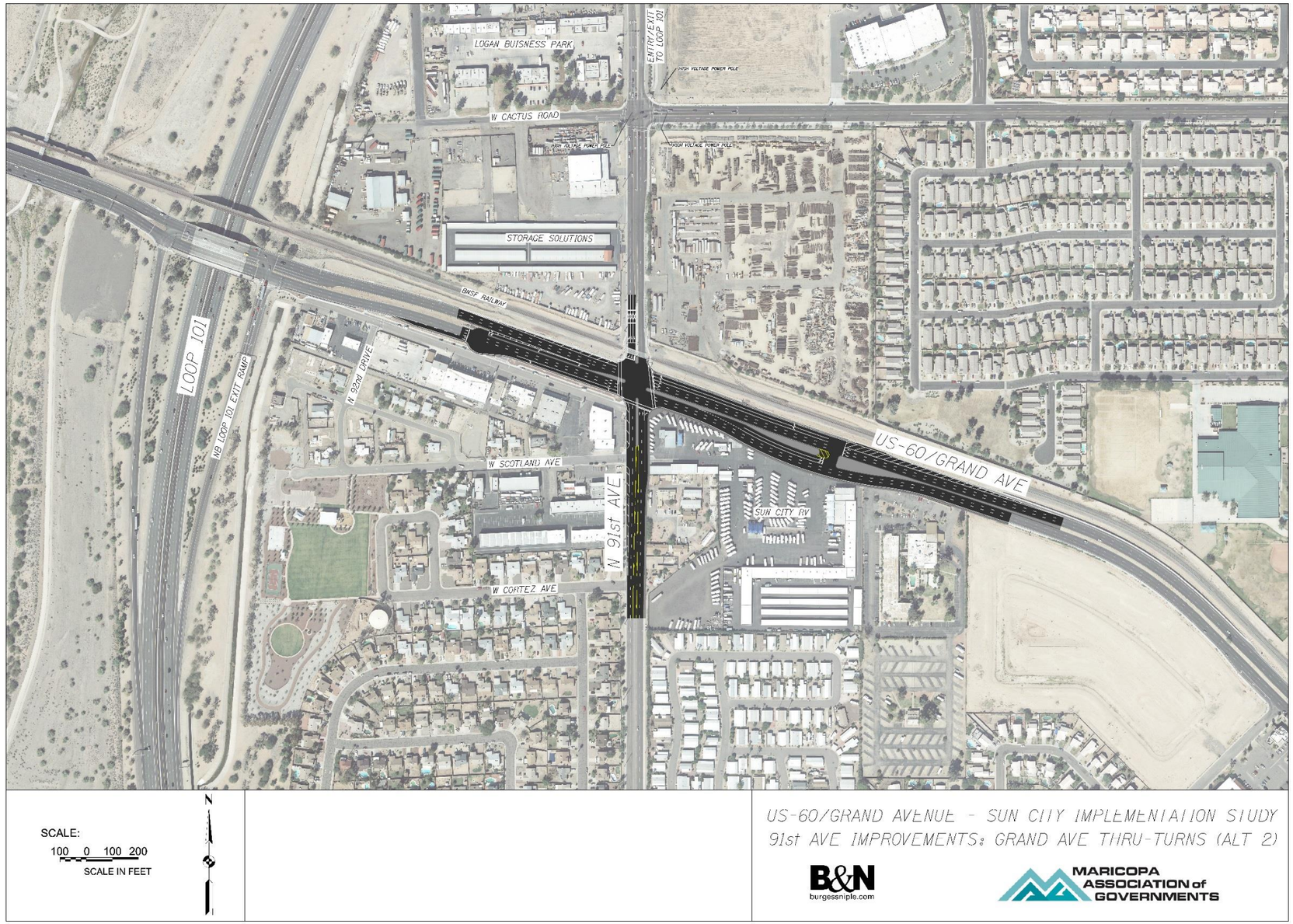

7.3.6 91st Avenue Alternative: 91st Avenue Roundabout and Thru-Turn

Due to the tight right-of-way constraints on US-60/Grand Avenue imposed by the railway, utilities, and properties, a combined roundabout and Thru-Turn alternative on 91st Avenue was developed. The Thru-Turn would be designed with the same basic configuration discussed in ***Section 7.3.5***.

The Thru-Turn would be implemented on US-60/Grand Avenue to eliminate all left turns from the US-60/Grand Avenue intersection with 91st Avenue. Left turns from eastbound US-60/Grand Avenue to northbound 91st Avenue or from southbound 91st Avenue to eastbound US-60/Grand Avenue are directed to a two-lane signalized U-turn south of the main intersection along 91st Avenue. Left turns from westbound US-60/Grand Avenue to southbound 91st Avenue or from northbound 91st Avenue onto westbound US-60/Grand Avenue are directed to a two-lane roundabout at 91st Avenue and Cactus north of the main intersection along US-60/Grand Avenue. The locations and configurations of the roundabout and Thru-Turn are illustrated in ***Figure 24***. The anticipated traffic performance is detailed in ***Section 8.3.4***. Roll plots for the improvements are included in **Appendix D**.

The roundabout and Thru-Turn on 91st Avenue will impact an estimated 0.70 acres of land from nine of the surrounding parcels. One total take is anticipated.

The improvements depicted in ***Figure 24*** are estimated to cost $10,229,500 in 2019 dollars. The estimate includes costs for construction, design, utility relocations, and right-of-way acquisitions. Parametric cost estimates are included in **Appendix E**.

Figure 24 – 91st Avenue Roundabout and Thru-Turn

7.3.7 91st Avenue Alternative: Dual Southbound Left Turn Lanes

After the discussions with Project Partners in ***Section 3.0***, the addition of a second left-turn lane for traffic traveling from southbound 91st Avenue to eastbound US-60/Grand Avenue was proposed. The second left-turn lane allows for the extra storage and movement of vehicles with less impediment to the through traffic, increasing the southbound traffic flow.

The anticipated traffic operations, detailed in ***Section 8.3.5***, show that the dual southbound left-turn lanes will fail during the p.m. peak hour. No further development of this alternative was performed.

8.0 Future Conditions Results

Capacity analyses were conducted for intersections within the Study Area for both a 2040 Future No Build scenario and for a 2040 Future Build scenario. The 2040 Future No Build scenario assumes that the existing configuration of the corridor will remain unchanged by the year 2040. The 2040 Future Build scenario incorporates the improvements suggested as part of the recommended Conceptual Interim Solutions, discussed in more detail in ***Section 7.3***. The results presented utilize Synchro's built-in methodology for all intersections. More discussion on the Synchro models is provided in ***Section 5.1.3***. The full results of the Synchro analyses are provided in **Appendix C**.

8.1 2040 Turning Movement Volumes

Figure 25 shows the future turning movement counts for each identified intersection in the Study Area. The No Build and Build alternatives use the same future traffic volumes for comparative analysis. ***Section 5.1.2*** describes the methodology used to calculate the future volumes in further detail.

Figure 25 – Future (2040) Turning Movement Counts

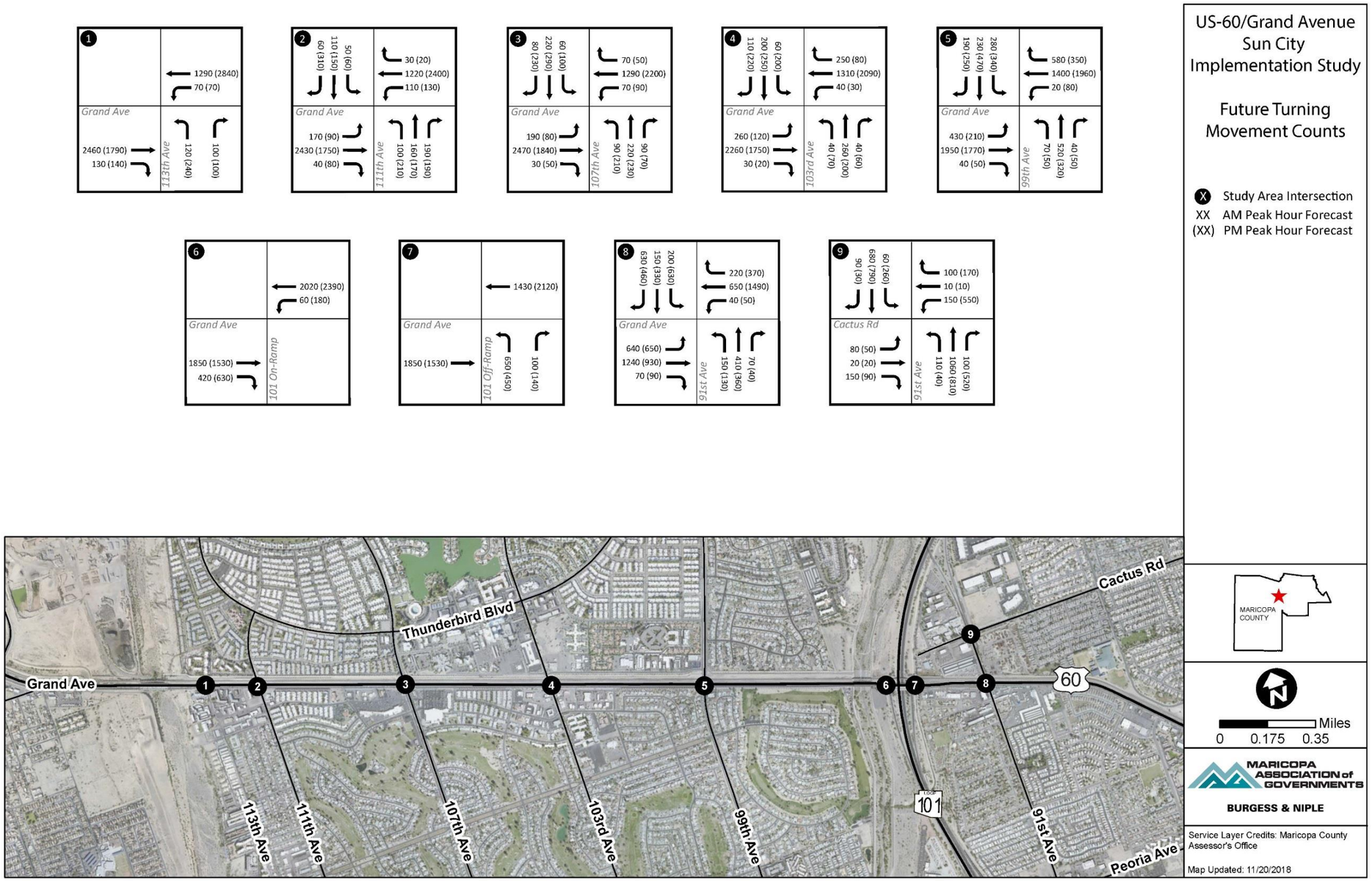

8.2 2040 Future No Build Traffic Analysis Results

The 2040 Future No Build analysis examines the operational performance of the Study Area corridor under the assumption that no improvements have been made to the corridor beyond current programmed improvements. The roadway configuration in the Synchro model remains identical to that of the existing conditions and the model uses 2040 projected traffic volumes. The results of this analysis are presented in ***Table 6***.

Table 6 – 2040 No Build AM & PM Peak Hour Capacity Analysis

Intersection*	Approach	2040 AM Peak		2040 PM Peak	
		Delay (s)	LOS	Delay (s)	LOS
Intersection 1 113th Avenue & Grand Avenue	Eastbound	29.7	C	22.1	C
	Westbound	25.1	C	26.8	C
	Northbound	48.5	D	53.9	D
	Overall	**29.2**	**C**	**26.8**	**C**
Intersection 2 111th Avenue & Grand Avenue	Eastbound	153.6	F	63.1	E
	Westbound	28.5	C	122.5	F
	Northbound	28.9	C	41.8	D
	Southbound	41.7	D	57.3	E
	Overall	**99.9**	**F**	**87.7**	**F**
Intersection 3 107th Avenue & Grand Avenue	Eastbound	44.4	D	20.5	C
	Westbound	23.9	C	69.6	E
	Northbound	50.5	D	65.8	E
	Southbound	52.0	D	57.7	E
	Overall	**39.4**	**D**	**50.1**	**D**
Intersection 4 103rd Avenue & Grand Avenue	Eastbound	12.9	B	14.8	B
	Westbound	12.6	B	53.7	D
	Northbound	59.0	E	53.7	D
	Southbound	45.8	D	56.5	E
	Overall	**18.5**	**B**	**39.6**	**D**
Intersection 5 99th Avenue & Grand Avenue	Eastbound	51.2	D	56.7	E
	Westbound	217.0	F	197.7	F
	Northbound	78.4	E	45.8	D
	Southbound	120.5	F	89.9	F
	Overall	**120.3**	**F**	**119.0**	**F**
Intersection 6 SR-101L SB & Grand Avenue	Eastbound	3.5	A	5.0	A
	Westbound	3.1	A	6.5	A
	Overall	**3.3**	**A**	**5.8**	**A**
Intersection 7 SR-101L NB & Grand Avenue	Eastbound	21.2	C	17.9	B
	Westbound	16.1	B	19.5	B
	Northbound	30.1	C	26.2	C
	Overall	**21.1**	**C**	**19.8**	**B**

Intersection*	Approach	2040 AM Peak		2040 PM Peak	
		Delay (s)	LOS	Delay (s)	LOS
Intersection 8 91st Avenue & Grand Avenue	Eastbound	41.9	D	129.6	F
	Westbound	46.9	D	151.1	F
	Northbound	52.4	D	59.9	E
	Southbound	44.4	D	161.0	F
	Overall	**45.0**	**D**	**138.4**	**F**
Intersection 9 91st Avenue & Cactus Road	Eastbound	30.0	C	31.3	C
	Westbound	46.1	D	63.8	E
	Northbound	13.5	B	16.2	B
	Southbound	30.3	C	43.4	D
	Overall	**23.7**	**C**	**36.1**	**D**
Refer to ***Figure 25 *for a graphical depiction which utilizes the intersection numbers.*					

Under 2040 Future No Build conditions, the US-60/Grand Avenue intersections with 111th Avenue and 99th Avenue will operate at LOS F during the a.m. peak hour. The northbound approach to 103rd Avenue intersection with US-60/Grand Avenue will operate at LOS E, but the intersection will operate at an overall LOS E.

During the p.m. peak hour, the US-60/Grand Avenue intersections with 111th Avenue, 99th Avenue, and 91st Avenue operate at LOS F. The US-60/Grand Avenue intersections with 107th Avenue and 103rd Avenue, and the 91st Avenue intersection with Cactus Road have approaches that operate at LOS E or F, but the overall operation of the intersection remains at LOS D.

8.3 2040 Future Build Traffic Analysis Results

The results of the conceptual interim solutions detailed in ***Section 7.3*** are described in the following sections. Due to the varying alternatives for the 91st Avenue and US-60/Grand Avenue intersection, traffic analyses were run separately to examine the traffic performance under 2040 traffic volumes.

8.3.1 111th Avenue and 99th Avenue Improvements Results

The results of the 2040 Future Build analysis for 111th Avenue and 99th Avenue, shown in ***Table 7***, examines the operational performance of the Study Area corridor under the assumption that all of the intersection improvements proposed in ***Sections 7.3.1*** and ***7.3.2*** have been completed. The improvements include widening 111th Avenue and 99th Avenue to allow for additional turning and through movements and widening US-60/Grand Avenue to allow for additional turning movements. No improvements to 91st Avenue were modeled in this analysis – the traffic analyses for 91st Avenue are in ***Sections 8.3.2*** through ***8.3.5***.

Table 7 – 2040 Future Build AM & PM Peak Hour Capacity Analysis

Intersection*	Approach	2040 AM Peak		2040 PM Peak	
		Delay (s)	LOS	Delay (s)	LOS
Intersection 1 113th Avenue & Grand Avenue	Eastbound	29.7	C	22.1	C
	Westbound	11.5	B	26.8	C
	Northbound	48.5	D	53.9	D
	Overall	**24.7**	**C**	**26.8**	**C**
Intersection 2 111th Avenue & Grand Avenue	Eastbound	53.1	D	34.2	C
	Westbound	33.3	C	52.7	D
	Northbound	42.4	D	48.2	D
	Southbound	50.8	D	62.5	E
	Overall	**46.2**	**D**	**46.8**	**D**
Intersection 3 107th Avenue & Grand Avenue	Eastbound	68.1	E	46.2	D
	Westbound	24.2	C	69.7	E
	Northbound	50.5	D	65.8	E
	Southbound	52.0	D	57.7	E
	Overall	**52.6**	**D**	**59.5**	**E**
Intersection 4 103rd Avenue & Grand Avenue	Eastbound	13.1	B	14.8	B
	Westbound	16.9	B	59.4	E
	Northbound	59.0	E	53.7	D
	Southbound	45.8	D	56.5	E
	Overall	**20.1**	**C**	**42.1**	**D**
Intersection 5 99th Avenue & Grand Avenue	Eastbound	23.1	C	26.6	C
	Westbound	45.2	D	42.1	D
	Northbound	58.0	E	47.0	D
	Southbound	47.9	D	50.8	D
	Overall	**37.6**	**D**	**38.7**	**D**
Intersection 6 SR-101L SB & Grand Avenue	Eastbound	3.5	A	5.0	A
	Westbound	3.1	A	6.5	A
	Overall	**3.3**	**A**	**5.8**	**A**
Intersection 7 SR-101L NB & Grand Avenue	Eastbound	21.2	C	17.9	B
	Westbound	16.1	B	19.5	B
	Northbound	30.1	C	26.2	C
	Overall	21.1	C	19.8	**B**

*****Refer to **Figure 25** for a graphical depiction which utilizes the intersection numbers.*

The improvements to 111th Avenue and 99th Avenue result in both intersections performing an overall LOS D. However, the improvements at 111th Avenue and 99th Avenue permit previously constrained traffic quicker access to the intersections at 107th Avenue and 103rd Avenue, reducing the respective levels of the service. As the 2040 Future Build analysis uses optimized signal timings in the range of 90 to 120 seconds,

adjustments to timing offsets and/or the eventual revised signal timing plans to the 107th Avenue and 103rd Avenue intersections should correct the delays.

8.3.2 91st Avenue Alternative: Texas-U Results

The results of the 91st Avenue Alternative: Texas-U analysis for 2040 Future Build conditions are shown in ***Table 8***. The analysis examines the operational performance of the Study Area corridor under the assumption that the improvements to 111th Avenue and 99th Avenue, discussed in ***Sections 7.3.1*** and ***7.3.2***, have been completed in addition to the Texas-U at Peoria Avenue. Only the intersections affected by the inclusion of the Texas-U are shown in ***Table 8*** – the remaining intersections perform to the same standard as shown in ***Section 8.3.1***.

Table 8 – 91st Avenue Alternative: Texas-U 2040 AM & PM Peak Hour Capacity Analysis

Intersection*	Approach	2040 AM Peak		2040 PM Peak	
		Delay (s)	LOS	Delay (s)	LOS
Intersection 6 SR-101L SB & Grand Avenue	Eastbound	3.7	A	5.1	A
	Westbound	3.1	A	6.7	A
	Overall	**3.4**	**A**	**6.1**	**A**
Intersection 7 SR-101L NB & Grand Avenue	Eastbound	57.2	E	29.9	C
	Westbound	24.1	C	29.3	C
	Northbound	38.8	D	26.8	C
	Overall	**41.5**	**D**	**28.7**	**C**
Intersection 8 91st Avenue & Grand Avenue	Eastbound	40.7	D	50.5	D
	Westbound	41.1	D	68.2	E
	Northbound	42.1	D	60.9	E
	Southbound	26.7	C	53.7	D
	Overall	**40.5**	**D**	**59.0**	**E**
Intersection 9 91st Avenue & Cactus Road	Eastbound	29.2	C	30.4	C
	Westbound	43.5	D	49.4	D
	Northbound	11.9	B	12.2	B
	Southbound	28.4	C	36.1	D
	Overall	**19.1**	**B**	**26.1**	**C**

*****Refer to **Figure 25** for a graphical depiction which utilizes the intersection numbers.*

The inclusion of the Texas-U at Peoria Avenue to the south involves removing the southbound off-ramp from SR-101L onto 91st Avenue. The displacement of the exiting traffic through the Texas-U and onto the US-60/Grand Avenue exit ramp causes delays at the exit ramp intersection and at the 91st Avenue intersection, with the intersection of 91st Avenue and US-60/Grand Avenue operating at a failing LOS E.

8.3.3 91st Avenue Alternative: US-60/Grand Avenue Thru-Turn Results

The results of the 91st Avenue Alternative: US-60/Grand Avenue Thru-Turn analysis for 2040 Future Build conditions are shown in ***Table 9***. The analysis examines the operational performance of the Study Area corridor under the assumption that the improvements to 111th Avenue and 99th Avenue, discussed in ***Sections 7.3.1*** and ***7.3.2***, have been completed in addition to the Thru-Turn on US-60/Grand Avenue. Only the intersections affected by the inclusion of the Thru-Turn are shown in ***Table 9*** – the remaining intersections perform to the same standard as shown in ***Section 8.3.1***.

Table 9 – 91st Avenue Alternative: US-60/Grand Avenue Thru-Turn 2040 AM & PM Peak Hour Capacity Analysis

Intersection*	Approach	2040 AM Peak		2040 PM Peak	
		Delay (s)	LOS	Delay (s)	LOS
West U-Turn (new intersection)	Eastbound	2.3	A	1.3	A
	Westbound	1.6	A	2.0	A
	Overall	**2.0**	**A**	**1.7**	**A**
Intersection 8 91st Avenue & Grand Avenue	Eastbound	29.5	C	28.9	C
	Westbound	26.0	C	30.6	C
	Northbound	25.6	C	19.4	B
	Southbound	23.7	C	28.5	C
	Overall	**27.0**	**C**	**28.7**	**C**
East U-Turn (new intersection)	Eastbound	6.1	A	10.0	B
	Westbound	18.2	B	14.0	B
	Overall	**9.5**	**A**	**11.8**	**B**
Intersection 9 91st Avenue & Cactus Road	Eastbound	30.0	C	30.0	C
	Westbound	46.1	D	46.1	D
	Northbound	23.9	C	25.2	C
	Southbound	30.3	C	30.3	C
	Overall	**28.7**	**C**	**29.4**	**C**

*****Refer to **Figure 25** for a graphical depiction which utilizes the intersection numbers.*

The inclusion of a Thru-Turn on the east and west sides of the 91st Avenue and US-60/Grand Avenue intersection introduces two new intersections to allow for the U-turning movements. The two new intersections and the intersections of 91st Avenue with US-60/Grand Avenue and 91st Avenue with Cactus Road perform at an acceptable LOS in the a.m. and p.m. peak hours.

8.3.4 91st Avenue Alternative: 91st Avenue Roundabout and Thru-Turn Results

The results of the 91st Avenue Alternative: 91st Avenue Roundabout and Thru-Turn analysis for 2040 Future Build conditions are shown in ***Table 10***. The analysis examines the operational performance of the Study Area corridor under the assumption that the

improvements to 111th Avenue and 99th Avenue, discussed in ***Sections 7.3.1*** and ***7.3.2***, have been completed, in addition to the roundabout at 91st Avenue and Cactus Road and the Thru-Turn near 91st Avenue and Cortez Avenue. A traffic analysis was not run for the southern loon near Cortez Avenue as the intersection is outside the extents of the Study Area and traffic data was not collected. Only the intersections affected by the inclusion of the roundabout and Thru-Turn are shown in ***Table 10*** – the remaining intersections perform to the same standard as shown in ***Section 8.3.1***.

Table 10 – 91st Avenue Alternative: Roundabout and Thru-Turn 2040 AM & PM Peak Hour Capacity Analysis

Intersection*	Approach	2040 AM Peak		2040 PM Peak	
		Delay (s)	LOS	Delay (s)	LOS
Intersection 6 SR-101L SB & Grand Avenue	Eastbound	3.5	A	5.0	A
	Westbound	3.1	A	6.5	A
	Overall	**3.3**	**A**	**5.8**	**A**
Intersection 7 SR-101L NB & Grand Avenue	Eastbound	21.2	C	17.9	B
	Westbound	16.1	B	19.5	B
	Northbound	30.1	C	26.2	C
	Overall	**21.1**	**C**	**19.8**	**B**
Intersection 8 91st Avenue & Grand Avenue	Eastbound	28.7	C	41.2	D
	Westbound	35.3	D	40.5	D
	Northbound	32.9	C	51.4	D
	Southbound	15.5	B	29.4	C
	Overall	**28.1**	**C**	**41.0**	**D**
Intersection 9 91st Avenue & Cactus Road**	Eastbound	30.0	C	31.3	C
	Westbound	46.1	D	63.8	E
	Northbound	23.8	C	43.5	D
	Southbound	30.3	C	43.4	D
	Overall	**28.7**	**C**	**47.3**	**D**

Refer to **Figure 25 for a graphical depiction which utilizes the intersection numbers.*

***Intersection is a roundabout in build condition for this alternative.*

The combination of a roundabout at 91st Avenue and Cactus Road and a Thru-Turn near 91st Avenue and Cortez Avenue results in acceptable levels of service on US-60/Grand Avenue and 91st Avenue. The p.m. peak hour sees the heaviest flow of traffic through the area, and the worst expected LOS is only a D.

8.3.5 91st Avenue Alternative: Dual Southbound Left Turn Lanes Results

The results of the 91st Avenue Alternative: Dual Southbound Left Turn Lanes for 2040 Future Build conditions are shown in ***Table 11***. The analysis examines the operational performance of the Study Area corridor under the assumption that the improvements to

111th Avenue and 99th Avenue, discussed in ***Sections 7.3.1*** and ***7.3.2***, have been completed in addition to dual southbound left turn lanes at 91st Avenue and US-60/Grand Avenue. Only the intersections affected by the inclusion of the dual left turn lanes are shown in ***Table 11*** – the remaining intersections perform to the same standard as shown in ***Section 8.3.1***.

Table 11 – 91st Avenue Alternative: Dual Southbound Left Turn Lanes 2040 AM & PM Peak Hour Capacity Analysis

Intersection*	Approach	2040 AM Peak		2040 PM Peak	
		Delay (s)	LOS	Delay (s)	LOS
Intersection 6 SR-101L SB & Grand Avenue	Eastbound	3.5	A	5.0	A
	Westbound	3.1	A	6.5	A
	Overall	**3.3**	**A**	**5.8**	**A**
Intersection 7 SR-101L NB & Grand Avenue	Eastbound	21.2	C	17.9	B
	Westbound	16.1	B	19.5	B
	Northbound	30.1	C	26.2	C
	Overall	**21.1**	**C**	**19.8**	**B**
Intersection 8 91st Avenue & Grand Avenue	Eastbound	38.2	D	68.0	E
	Westbound	45.0	D	97.8	F
	Northbound	49.6	D	68.7	E
	Southbound	45.1	D	77.2	E
	Overall	**42.7**	**D**	**80.7**	**F**
Intersection 9 91st Avenue & Cactus Road	Eastbound	30.0	C	31.3	C
	Westbound	46.1	D	63.8	E
	Northbound	14.8	B	19.0	B
	Southbound	30.3	C	43.4	D
	Overall	**24.3**	**C**	**37.3**	**D**

*****Refer to **Figure 25** for a graphical depiction which utilizes the intersection numbers.*

During the a.m. peak hours, the SR-101L intersections and the intersections on 91st Avenue perform at acceptable levels of service. During the p.m. peak hours, all approaches to 91st Avenue and US-60/Grand operate a failing levels of service, with the intersection performing at an overall LOS F.

9.0 Concept Evaluation

To determine the feasibility of the conceptual interim solutions detailed in ***Section 7.3***, the alternatives were evaluated against several standards and the results are summarized in the following sections.

9.1 Level of Service Comparison

A comparison of the level of service for existing conditions and future build conditions is shown in ***Table 12***. The table compares the first seven intersections of the corridor, from 113th Avenue to the SR-101L exit ramp, with the future build conditions modeling the improvements to 111th Avenue and 99th Avenue. The alternatives for 91st Avenue and US-60/Grand Avenue intersection are compared in ***Table 13*** for the a.m. peak hour and ***Table 14*** for the p.m. peak hour.

Table 12 – Comparison of AM Peak Hour Level of Service: 111th Avenue and 99th Avenue Improvements

Intersection*	Approach	2040 AM Peak LOS		2040 PM Peak LOS	
		No Build	Build	No Build	Build
Intersection 1 113th Avenue & Grand Avenue	Eastbound	C	C	C	C
	Westbound	C	B	C	C
	Northbound	D	D	D	D
	Overall	**C**	**C**	**C**	**C**
Intersection 2 111th Avenue & Grand Avenue	Eastbound	F	D	E	C
	Westbound	C	C	F	D
	Northbound	C	D	D	D
	Southbound	D	D	E	E
	Overall	**F**	**D**	**F**	**D**
Intersection 3 107th Avenue & Grand Avenue	Eastbound	D	E	C	D
	Westbound	C	C	E	E
	Northbound	D	D	E	E
	Southbound	D	D	E	E
	Overall	**D**	**D**	**D**	**E**
Intersection 4 103rd Avenue & Grand Avenue	Eastbound	B	B	B	B
	Westbound	B	B	D	E
	Northbound	E	E	D	D
	Southbound	D	D	E	E
	Overall	**B**	**C**	**D**	**D**
Intersection 5 99th Avenue & Grand Avenue	Eastbound	D	C	E	C
	Westbound	F	D	F	D
	Northbound	E	E	D	D
	Southbound	F	D	F	D
	Overall	**F**	**D**	**F**	**D**
Intersection 6 SR-101L SB & Grand Avenue	Eastbound	A	A	A	A
	Westbound	A	A	A	A
	Overall	**A**	**A**	**A**	**A**

Intersection*	Approach	2040 AM Peak LOS		2040 PM Peak LOS	
		No Build	Build	No Build	Build
Intersection 7 SR-101L NB & Grand Avenue	Eastbound	C	C	B	B
	Westbound	B	B	B	B
	Northbound	C	C	C	C
	Overall	**C**	C	**B**	**B**
Refer to **Figure 25 for a graphical depiction which utilizes the intersection numbers.*					

The interim solutions bring both 111th Avenue and 99th Avenue from LOS F up to LOS D during the 2040 design year. The vehicles no longer queued at those intersections can move freely to 107th Avenue and 103rd Avenue, increasing the delays at the respective intersections. Adding offsets to the signal timings along the corridor should help circumvent the queuing. Adaptive signal timing may also help prevent the delays.

Table 13 – Comparison of 91st Avenue Alternatives AM Peak Hour Level of Service

Intersection*	Approach	2040 AM Peak LOS				
		No Build	Texas-U	Grand Thru-Turn	91st Thru-Turn	Dual Left
Intersection 6 SR-101L SB & Grand Avenue	Eastbound	A	A	A	A	A
	Westbound	A	A	A	A	A
	Overall	**A**	**A**	**A**	**A**	**A**
Intersection 7 SR-101L NB & Grand Avenue	Eastbound	C	E	C	C	C
	Westbound	B	C	B	B	B
	Northbound	C	D	C	C	C
	Overall	**C**	**D**	**C**	**C**	**C**
West Thru-Turn	Eastbound	-	-	A	-	-
	Westbound	-	-	A	-	-
	Overall	-	-	**A**	-	-
Intersection 8 91st Avenue & Grand Avenue	Eastbound	D	D	C	C	D
	Westbound	D	D	C	D	D
	Northbound	D	D	C	C	D
	Southbound	D	C	C	B	D
	Overall	**D**	**D**	**C**	**C**	**D**
East Thru-Turn	Eastbound	-	-	A	-	-
	Westbound	-	-	B	-	-
	Overall	-	-	**A**	-	-

Intersection*	Approach	2040 AM Peak LOS				
		No Build	Texas-U	Grand Thru-Turn	91st Thru-Turn	Dual Left
Intersection 9 91st Avenue & Cactus Road	Eastbound	C	C	C	C**	C
	Westbound	D	D	D	D**	D
	Northbound	B	B	C	C**	B
	Southbound	C	C	C	C**	C
	Overall	**C**	**B**	**C**	**C****	**C**
Refer to **Figure 25 for a graphical depiction which utilizes the intersection numbers.*						
***Intersection is a roundabout in build condition for this alternative.*						

Table 14 – Comparison of 91st Avenue Alternatives PM Peak Hour Level of Service

Intersection*	Approach	2040 PM Peak LOS				
		No Build	Texas-U	Grand Thru-Turn	91st Thru-Turn	Dual Left
Intersection 6 SR-101L SB & Grand Avenue	Eastbound	A	A	A	A	A
	Westbound	A	A	A	A	A
	Overall	**A**	**A**	**A**	**A**	**A**
Intersection 7 SR-101L NB & Grand Avenue	Eastbound	B	C	B	B	B
	Westbound	B	C	B	B	B
	Northbound	C	C	C	C	C
	Overall	**B**	**C**	**B**	**B**	**B**
West Thru-Turn	Eastbound	-	-	A	-	-
	Westbound	-	-	A	-	-
	Overall	-	-	**A**	-	-
Intersection 8 91st Avenue & Grand Avenue	Eastbound	F	D	C	D	E
	Westbound	F	E	C	D	F
	Northbound	E	E	B	D	E
	Southbound	F	D	C	C	E
	Overall	**F**	**E**	**C**	**D**	**F**
East Thru-Turn	Eastbound	-	-	B	-	-
	Westbound	-	-	B	-	-
	Overall	-	-	**B**	-	-
Intersection 9 91st Avenue & Cactus Road	Eastbound	C	C	C	C**	C
	Westbound	E	D	D	E**	E
	Northbound	B	B	C	D**	B
	Southbound	D	D	C	D**	D
	Overall	**D**	**C**	**C**	**D****	**D**
Refer to **Figure 25 for a graphical depiction which utilizes the intersection numbers.*						
***Intersection is a roundabout in build condition for this alternative.*						

9.2 HCS7 Weave Analysis

A Highway Capacity Software (HCS7) Weave analysis was performed to assess the impact of the Texas-U alternative on the northbound and southbound weaving segments of SR-101L between Peoria Avenue and US-60/Grand Avenue. The Texas-U would be implemented at Peoria Avenue and would replace the southbound exit ramp at 91st Avenue. The analysis assumes that vehicles which previously exited SR-101L at the southbound 91st Avenue exit will instead use the Texas-U to exit SR-101L at the northbound US-60/Grand Avenue exit. Eliminating the southbound 91st Avenue exit increases the traffic demand for the exit to the southbound mainline volume between US-60/Grand Avenue and Peoria Avenue; the southbound off-ramp demand at Peoria Avenue; the northbound on-ramp demand at Peoria Avenue; the northbound mainline volumes between Peoria Avenue and US-60/Grand Avenue; and the exiting volume at US-60/Grand Avenue.

Traffic counts were collected for the a.m. and p.m. peak hours from the ADOT TDMS website at the ramp count stations and the continuous count station between Peoria Avenue and US-60/Grand Avenue. All counts, with the exception of the northbound US-60/Grand Avenue off-ramp, were collected on Wednesday, June 21, 2017. The northbound US-60/Grand Avenue off-ramp count was collected on Wednesday, August 2, 2017, as a June 21, 2017, count was not available at this location. The counts were adjusted to a "typical" daily count by applying a 2017 seasonal adjustment factor to each count. The seasonal adjustment factor was 0.933 for a Wednesday in June and 0.943 for a Wednesday in August. Counts were then grown to represent a future year (2040) count by applying a growth factor of 1.21, calculated from the ADT growth measured at the SR-101L and US-60/Grand Avenue TI. Ten percent of the mainline volume was assumed to be high occupancy vehicles (HOV) traffic demand. The HOV lane and HOV demand was excluded from the HCS analysis.

In general, the Texas-U configuration resulted in diminished performance in both directions along SR-101L between Peoria Avenue and US-60/Grand Avenue. The results are presented in ***Table 15***.

Table 15 – Weave Analysis Results

Direction	Scenario	Peak Hour	
		a.m.	p.m.
Northbound	No Build	D	C
	Build	F	F
Southbound	No Build	C	D
	Build	C	E

The Texas-U configuration causes the weaving segment along SR-101L between Peoria Avenue and US-60/Grand Avenue to drop below LOS D for the northbound segment in both peak hours and for the southbound segment in the p.m. peak hour. The weaving traffic introduced to this segment by eliminating the southbound 91st Avenue exit increases the weaving traffic demand by nearly 1,000 vehicles at all ramps except the US-60/Grand Avenue southbound on-ramp. Adding an additional lane to the freeway and extending the weaving distance did not mitigate LOS.

9.3 Movement Delay

A significant number of vehicles queue at the intersection of 91st Avenue and US-60/Grand Avenue to make left turns. Displacing the left turn movements requires vehicles to travel through an adjacent intersection to complete the movement. Traveling through an adjacent intersection, however, does not guarantee an increased travel time. To assess the feasibility of the US-60/Grand Avenue Thru-Turn alternative, a movement delay analysis was performed and summarized in ***Table 16***. The analysis estimates the time it takes to complete a displaced left turn movement by summing the average delays calculated with the anticipated time to travel from one intersection to the other at 25 mph. The summed time was then compared to the average delay for the same movement in the design year under the No Build configuration.

Table 16 – Movement Delay Analysis

Movement Delay of Alternatives vs. No Build in 2040				
	EBL	**WBL**	**NBL**	**SBL**
No Build	274.1 sec	64.5 sec	78.1 sec	315.1 sec
Displacing Lefts to Grand Avenue	128.6 sec	68.5 sec	106.8 sec	99.8 sec
Reduction in Movement Delay of Alternatives vs. No Build in 2040				
	EBL	**WBL**	**NBL**	**SBL**
No Build	-	-	-	-
Displacing Lefts to Grand Avenue	53%	-6%	-37%	68%
*A negative number indicates that the travel time increased for that movement when compared to the No Build configuration in 2040.				

By displacing the left turns onto US-60/Grand Avenue with the Thru-Turn, the eastbound lefts and southbound lefts each see a reduction in delay of over 50 percent. The westbound lefts are delayed by an additional 5 seconds, and the northbound lefts are delayed by nearly half a minute.

A movement delay analysis was not run for the displaced turns along 91st Avenue since the southern loon is outside the extents of the Study Area and traffic data was not collected.

9.4 91st Avenue Alternatives Comparison

The four 91st Avenue and US-60/Grand Avenue intersection alternatives are compared in ***Table 17***. The comparison examines the proposed cost of each alternative, right-of-impacts, traffic operations, and how traffic movement will fare when a train passes through on the railroad (Resiliency to RR). Because the effect of train crossings was not modeled, the
"Resiliency to RR" column is a qualitative analysis of how traffic is impacted by the railway due to the new flow of traffic created by the improvements. Present-day traffic resiliency to the railway is considered fair.

Table 17 – 91st Avenue Alternatives Comparison

Option	Cost	ROW Impacts	Operations	Hours/Day when it Fails	Resiliency to RR
No build	-	-	F	PM Peak	Fair
Texas-U	$7,300,000	None identified	E	PM Peak	Very Good
Thru-Turn (Grand)	$7,588,00	Total Acreage: 0.78 Number of Parcels impacted: 6 Total Takes: 0	C	-	Good
Roundabout & Thru-Turn (91st)	$10,229,500	Total Acreage: 0.70 Number of Parcels impacted: 9 Total Takes: 1	D	-	Poor
Dual Left Turn Lane	Alternative not developed		F	PM Peak	Fair

10.0 Implementation Plan

The US-60/Grand Avenue COMPASS project provided: 1) Focus for the agencies along the corridor and 2) Direction for future projects. The analyses completed as part of the US-60/Grand Avenue Sun City Implementation Study further investigated the transportation challenges and implementation feasibility. The following general steps should be taken:

Identify Preferred Concept at the US-60/Grand Avenue Intersection at 91st Avenue – This study investigated four conceptual interim solutions for the intersection at 91st Avenue. The city of Peoria and project partners should further collaborate to identify one or more for further development.

Accept the Recommendations into the Regional Transportation Plan – The recommendations and implementation strategies of this study should be accepted by the MAG Regional Council and adopted as illustrative projects in the Regional Transportation Plan.

Incorporate Recommendations into Existing and Future Studies and Planning Documents – The study area traverses Youngtown, Peoria, and unincorporated Maricopa County; to maintain consistency throughout the corridor, each agency should adopt the recommendations of this study.

Complete ADOT Scoping Phase (Design Concept Report) – The recommended roadway concepts should be carried forward as Design Concept Alternatives in ADOT's project development process. The geometric recommendations are conceptual in nature; the formal ADOT Scoping Phase will need to be completed, including required typical local, state, and federal agencies approvals. Use of the information contained herein for right-of-way acquisition and similar activities is not recommended until the appropriate time during ADOT's project development process. Potential additional Design Concept Alternatives that may surface through ADOT's process should be consistent with the operational and access goals of this study and the US-60/Grand Avenue COMPASS project.

Public outreach efforts will be needed to gather input for the recommended alternatives. These include facility users such as emergency first responders, residents and commuters, pedestrian and cyclists, golf cart users and others. Particular items of focus include the scope of improvements, changes of access, and interaction with railway traffic.

Prior to the final design of any improvements, additional investigation and analyses should be conducted, including necessary environmental/NEPA evaluations, geotechnical investigations, and others. Special consideration will be needed for potential environmental impacts, especially environmental justice, natural resources, contaminated sites, and underground storage tanks.

The US-60/Grand Avenue COMPASS Partnering Charter identified the desire for a unified approach to aesthetic treatments within the corridor. This should be addressed during the ADOT Scoping Phase.

Coordinate Transit Operations – Existing multimodal facilities and services are limited in the study area. Future additional transit services are being planned; potential connections and linkages between routes and modes should be considered.

Implement US-60/Grand Avenue Traffic Management Plan Recommendations – The traffic management plan recommended a series of ITS infrastructure improvements and corridor management strategies including service, roles and responsibilities of the US-60/Grand Avenue COMPASS charter agencies.

Funding – Funds for implementing either the ultimate (grade separations) or the conceptual interim solutions have not yet been identified. Agencies will need to develop a collaborative approach to funding, such as the potential extension of the Maricopa County Transportation Sales Tax (i.e. Proposition 400) Regional Area Road Fund. Local agencies and municipalities could potentially fund or partially fund improvements.

Monitoring Corridor Operations – Conceptual interim solutions were requested by the Project Partners due to lower traffic forecasts and availability of funding sources. The conceptual interim solutions address updated 2040 traffic forecasts and current safety trends, however, do not address the at-grade railroad crossings. Corridor performance, safety trends, and funding opportunities should be reevaluated in the future.

11.0 Conclusion

The US-60/Grand Avenue Sun City Implementation Study engaged MAG, ADOT, the cities of El Mirage and Peoria, and the town of Youngtown to develop feasible interim solutions for accommodating travel demand through 2040 along US-60/Grand Avenue, between Thunderbird Road/Thompson Ranch Road and 91st Avenue. With nine signalized intersections in the Study Area, numerous unsignalized access points, and traffic volumes nearing 60,000 vehicles per day, US-60/Grand Avenue is currently failing at several locations and future travel demand projections anticipate even worse operations.

Conceptual interim solutions were developed for the three worst-performing intersections on US-60/Grand Avenue in the Study Area: 111th Avenue, 99th Avenue, and 91st Avenue. The conceptual solutions were developed using performance-based practical design. The alternatives were also developed to minimize right-of-way impacts, improve traffic LOS, and have independent utility by intersection to phase the funding needed for construction.

The interim solutions to 111th Avenue and 99th Avenue improve 2040 traffic operations from LOS F to LOS D. The resulting increase in the flow of traffic causes the intersection of 107th Avenue and US-60/Grand Avenue to fall to a LOS E in the p.m. peak, but future improvements to the traffic signal timing and the correction of timing offsets should correct the flow of traffic and improve the intersection performance.

Four possible alternatives for the intersection of 91st Avenue and US-60/Grand were explored:

- The Texas-U alternative would remove the southbound exit ramp from SR-101L to 91st Avenue and would redirect the traffic to an exclusive U-turn lane at Peoria Avenue, where the traffic would join with the northbound exit ramp from SR-101L to US-60/Grand Avenue.
- The US-60/Grand Avenue Thru-Turns would displace all left turns at the intersection to loons located east and west of 91st Avenue.
- The 91st Avenue roundabout and Thru-Turn would displace all left turns at the intersection to either the roundabout at Cactus Road and 91st Avenue or the loon near Cortez Avenue and 91st Avenue.
- The Dual Southbound Left Turns alternative added a second left-turn lane to southbound 91st Avenue at the intersection.

A traffic analysis found that the US-60/Grand Avenue Thru-Turn is expected to operate at LOS C during the p.m. peak, and the 91st Avenue roundabout and Thru-Turn would operate at LOS D. The other two alternatives did not perform as well.

APPENDIX A

Meeting Summaries

NOTES

US-60/Grand Avenue
Sun City Implementation Study

Thunderbird Road-Thompson Ranch Road to 91st Avenue

Kickoff Meeting
July 26, 2017

ATTENDEES
See attached sign-in sheet.

HANDOUTS
Agenda, PowerPoint presentation, Study Area Issues Map.

Quinn Castro, MAG Project Manager, convened the meeting at 1:05 P.M.

1. INTRODUCTIONS
Ms. Castro welcomed everyone and asked all participants to introduce themselves.

2. PROJECT OVERVIEW
Mr. Pagnard provided a brief overview of the project and indicated that the purpose of the meeting was to identify a list of stakeholders for one-on-on meetings and develop the study goals and objectives. He provided a description of the study area indicating areas of concern and the recommended improvements from the MAG Corridor Optimization, Access Management Plan and System Study (COMPASS). Mr. Pagnard asked the Planning Partners whether they would like Burgess & Niple to investigate improvements at 91st Avenue. Mr. Nissen stated that he would like this intersection to be included in the study to identify improvements. Ms. Castro concurred.

3. SCOPE OF SERVICES AND STUDY GOALS
Mr. Pagnard provided an overview of the study scope of services and goals. He reviewed the tasks and deliverables. Mr. Pagnard stated that a public meeting is anticipated to be held during Task 3 in the Youngtown clubhouse. He added that emergency vehicle operations will be critical for this project due to the Sun City Fire and Medical Department and Banner Boswell Medical Center. Mr. Brozich questioned whether right-of-way impacts would be evaluated to which Mr. Pagnard responded yes.

Mr. Pagnard reviewed goals and objectives. He indicated that per the request for proposals, the ultimate study purpose is to focus on the horizontal and vertical

geometric needs of the corridor. He asked the Planning Partners if there were any additional goals and objectives to add to the list. The following items were mentioned:

- Protect access/commercial for Youngtown along US-60/Grand Avenue. The Youngtown main entrance will need to be determined.
- MCDOT is concerned with 99th Avenue and pedestrian crossings of the BNSF Railway.
    - Ms. Lacey mentioned that a study was recently completed for 111th Avenue and that she could provide B&N with the study. She would also review the results from the MCDOT Active Transportation Plan to identify issues/concerns.
- Planning Partners identified bicyclists as users of the corridor especially in the Youngtown area.
- There is a gap of bicycle and pedestrian facilities along the corridor between 99th Avenue and SR-101L.
    - The public is requesting a connection to the trail near the New River Bridge on the south side of the corridor.
- Improvements should avoid making US-60/Grand Avenue a barrier to cross. There is a mix of users including bicyclists, pedestrians, and golf carts.
- Mr. Brozich suggested looking at utilities in the area and potential impacts to them based on the improvements. He stated that there are major trunk lines along the corridor within the study area.
- Mr. Lenzer indicated that implementation would be coordinated with the Planning Partners based on available funds and concurrent projects in or near the study area.

4. CORRIDOR PAST WORK EFFORTS

Mr. Pagnard provided a brief overview of the US-60/Grand Avenue COMPASS project and the Guiding Principles created by the planning partners. He reviewed the recommendations from the study for each intersection including:

- 113th Avenue – Florida T;
- 111th Avenue – Grade separated;
- 107th Avenue – MUD;
- 103rd Avenue – Grade separated;
- 99th Avenue – MUD;
- SR-101L – Eastbound right-turn lane; and
- 91st Avenue – Upstream Signalized Crossover.

Mr. Pagnard provided a brief overview of the US-60/Grand Avenue Traffic Management Plan stating that the plan recommended the addition of CCTV cameras, fiber, and DMS among others for the corridor. Mr. Pagnard added that the ADOT Statewide DMS Master Plan recommends two DMS sites within the study area approaching SR-101L. Mr. Nissen inquired about adaptive signal control, similar to the improvements to the Bell Road corridor. Mr. Pagnard indicated that was included.

Mr. Pagnard provided a brief overview of the MAG Regional Commuter Rail System Study Update to be completed in 2017. He stated that at the end of the MAG COMPASS project; further discussion occurred regarding the potential of changing (lowering) the grade of the BNSF Railway between the Agua Fria River Bridge and New River Bridge to facilitate roadway improvements and eliminate at-grade intersections. Mr. Brozich added that BNSF Railway may contribute funds to make these improvements. Mr. Nissen added that it will be important to consider the floodplain if the railroad grade is lowered.

Mr. Pagnard provided a brief overview of the Youngtown Transportation Master Plan which indicated that 111th Avenue is an important roadway for the Town of Youngtown. It also included eastbound right-turn lanes at 113th Avenue and 111th Avenue.

Mr. Pagnard provided a brief overview of the recently completed improvements at the intersection of US-60/Grand Avenue and Thunderbird Road-Thompson Ranch Road and the current US-60/Grand Avenue Frontage Road project from Greenway Road to Thunderbird Road-Thompson Ranch Road.

The Planning Partners were asked to provide any additional information for nearby projects that should be considered in the study area.

5. STUDY AREA ISSUES

Mr. Pagnard continued by providing an overview of the study area issues and concerns and asked the Planning Partners to identify other issues not already listed. Study area issues included:

- Limited number of Agua Fria River crossings in the vicinity of the corridor;
- High traffic volumes (80,000 ADT);
- Sun City Fire and Medical Department along 111th Avenue needs access to US-60/Grand Avenue;
- The location where the potential traffic interchange ramps terminate should be coordinated with development access to limit/prohibit hard right-turns (short

weaves) across multiple lanes. This is an issue at the newly constructed US-60/Grand Avenue and Bell Road traffic interchange;
- Heavy traffic flow between 99th Avenue and SR-101L;
- Gaps in pedestrian and bicycle facilities near 99th Avenue, including access to the trail at New River;
- Impacts to the frontage road near 91st Avenue; and
- The City of Peoria is interested in 91st Avenue becoming grade separated and the northern SR-101L ramps at Cactus Road to be considered in the investigation since they are part of the SR-101L split diamond traffic interchange.

Mr. Nissen indicated that a study was completed that recommended widening 91st Avenue from US-60/Grand Avenue to Cactus Road. He stated that this has not been implemented due to limited right-of-way.

Mr. Pagnard stated the consultant team would conduct various one-on-one meetings with stakeholders. This includes coordinating with Ms. Lacey for the Property Owners and Residents Association (Sun City, AZ) (PORA) to identify the concerns of the residents.

6. EVALUATION CONSIDERATIONS

Mr. Pagnard provided a brief overview of potential evaluation considerations and asked the Planning Partners to modify, remove, or identify others. The following additional evaluation considerations were identified:

- Consistent and compatible with community goals and development/master plans;
- Right-of-way impacts;
- Emergency response operations;
- Maintenance of traffic during construction; and
- Maintain/enhance economic development.

7. NEXT STEPS

Mr. Nissen questioned if funding had been identified for improvements. Ms. Castro stated that Proposition 500 may provide funding for improvements.

Ms. Castro thanked attendees for their participation and reviewed project next steps:

- Planning Partners will inform the study team of other relevant recent or upcoming projects in the study area.

- The study team will prepare a meeting summary and distribute it to the Planning Partners.
- B&N will begin coordination for the one-on-one meetings.

Meeting was adjourned at 2:30 P.M.

US-60/Grand Avenue
Sun City Implementation Study

Thunderbird Road/Thompson Ranch Road to 91st Avenue

SIGN-IN SHEET

Kickoff Meeting
Wednesday, July 26, 2017
1:00 p.m.
Maricopa Association of Governments
Cottonwood Room

Present	Name	Agency
AB	Anthony Brozich	ADOT
	Jorge Gastelum	City of El Mirage
	Adina Lund	City of Peoria
DN	Dan Nissen	" " "
QC	Quinn Castro	MAG
	Bob Hazlett	MAG
✓	Denise Lacey (phone)	MCDOT
	Grant Anderson	Town of Youngtown
CA	Cynthia Alvarez	Burgess & Niple
DL	David Lenzer	Burgess & Niple
JP	Jason Pagnard	Burgess & Niple

US-60/Grand Avenue
Sun City Implementation Study

Thunderbird Road/Thompson Ranch Road to 91st Avenue

AGENDA

Kickoff Meeting

Wednesday, July 26, 2017
1:00 p.m.
Maricopa Association of Governments
Cottonwood Conference Room

Meeting Purpose – Kickoff meeting that will engage ADOT, MAG, Maricopa County, City of El Mirage, City of Peoria, and Town of Youngtown in a discussion about the study's purpose, study area issues, and evaluation considerations.

1. Introductions	
2. Project Overview Brief overview of the project study area.	2. For information.
3. Scope of Services and Study Goals and Objectives A brief overview of the study's Scope of Services will be provided. A discussion will be facilitated to define the study goals and objectives.	3. For information, discussion, and to define goals and objectives.
4. Study Area Projects A review of recent and current study area work efforts will be provided.	4. For information.
5. Study Area Issues A discussion regarding the study area constraints, operational and safety issues, and Planning Partners concerns will be facilitated.	5. For information and discussion.
6. Evaluation Considerations Evaluation considerations for use in describing solution advantages and disadvantages will be identified.	6. For discussion to identify evaluation considerations.
7. Next Steps Discussion of the next action items.	7. For information

US-60/Grand Avenue Sun City Implementation Study

Kickoff Meeting
July 26, 2017

Agenda

1. Introductions.
2. Project Overview.
3. Scope of Services and Study Goals and Objectives.
4. Study Area Projects.
5. Study Area Issues.
6. Evaluation Considerations.
7. Next Steps.

© 2017, All Rights Reserved.

Project Overview

Agenda Topic 2

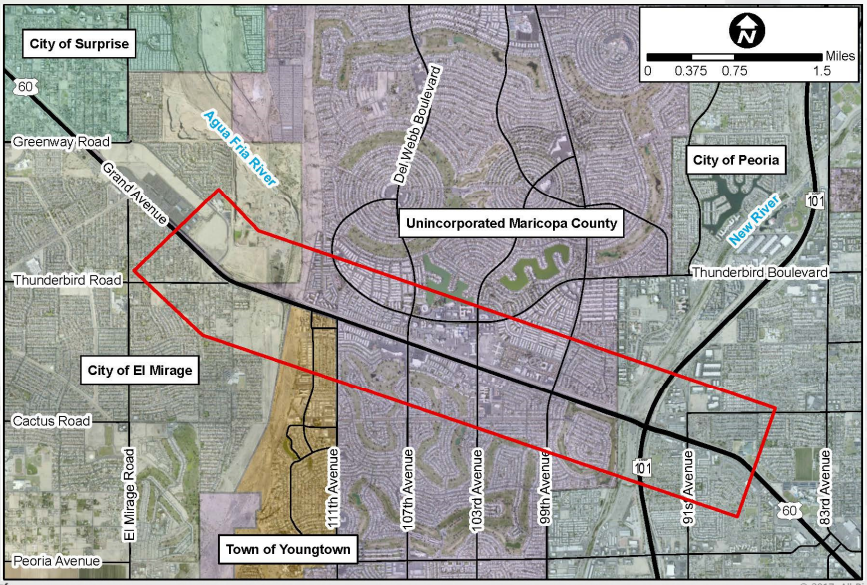

© 2017, All Rights Reserved. 3

Scope of Services

Agenda Topic 3

Task 1 Initiate Project and Administration	Task 2 Concept Development

▪ Initiate study.
▪ Prepare Project Management Plan.
▪ Conduct kickoff meeting to:
  ▪ Define goals and objectives;
  ▪ Review past work efforts;
  ▪ Identify study area constraints, operational and safety issues, and Planning Partner concerns; and
  ▪ Identify evaluation considerations.
 	
Deliverable: Project Management Plan
	▪ Conduct focus group and one-on-one meetings with Planning Partners and key stakeholders, such as:
	  ▪ Banner Boswell Medical Center;
	  ▪ Sun City Fire and Medical Department; and
	  ▪ BNSF Railway
	▪ Conduct Planning Partner Consensus Meeting.
	
	Deliverable: Focus Group and One-on-One Meetings summaries, Planning Partner Consensus Meeting Summary

© 2017, All Rights Reserved. 4

Scope of Services

Agenda Topic 3

Task 3 Concept Evaluation	Task 4 Document Project
▪ Revise and update the traffic operational analysis models. ▪ Update the US-60/Grand Avenue COMPASS study horizontal and vertical geometry. ▪ Planning level cost estimates. ▪ Conduct Planning Partner Implementation Study. Deliverables: Technical Memorandum, Operational analysis summary, MicroStation files, Emergency Vehicles Operations Plan, Planning Partner Implementation Meeting summary, Public meeting materials, and Planning Partner Consensus Meeting summary	▪ Prepare Project Report. ▪ Include Planning Partner comments. ▪ Prepare a Recommendations Map Book. Deliverables: Project Report and Recommendations Map Book

MARICOPA ASSOCIATION of GOVERNMENTS

© 2017, All Rights Reserved. 5

Study Goals and Objectives

Agenda Topic 3

- Support stakeholder needs and goals;
- Implement the corridor vision;
- Enhance economic development opportunities;
- Accommodate travel demand;
- Address safety concerns;
- Align with good access management principles; and
- Compliment community transit initiatives.

MARICOPA ASSOCIATION of GOVERNMENTS

© 2017, All Rights Reserved. 6

Study Area Projects

Agenda Topic 4

US-60/Grand Avenue COMPASS:

- Created vision statement with guiding principles; and
- Developed access management plan; and
- Identified roadway improvement concepts, including new grade separations.

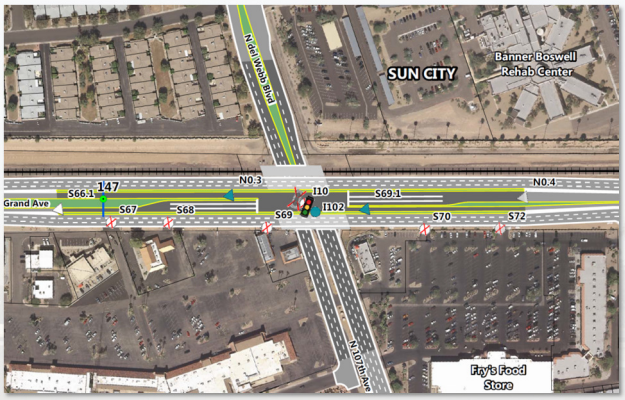

MARICOPA ASSOCIATION of GOVERNMENTS

© 2017, All Rights Reserved. 7

Study Area Projects

Agenda Topic 4

US-60/Grand Avenue COMPASS Vision Statement guiding principles include:

- Preserve and promote transportation capacity;
- Integrate multimodal transportation;
- Support and enhance economic growth;
- Advance safety and security;
- Establish a unified and coordinated approach to land use access;
- Promote a transit-supportive development pattern;
- Encourage coordinated aesthetics; and
- Connect communities in a cost effective manner.

MARICOPA ASSOCIATION of GOVERNMENTS

© 2017, All Rights Reserved. 8

Study Area Projects

Agenda Topic 4

US-60/Grand Avenue Traffic Management Plan:

- Inventoried existing traffic management infrastructure;
- Developed a Concept of Operations (ConOps);
- Identified infrastructure requirements and cost estimate; and
- Recommended a corridor Traffic Management Plan.

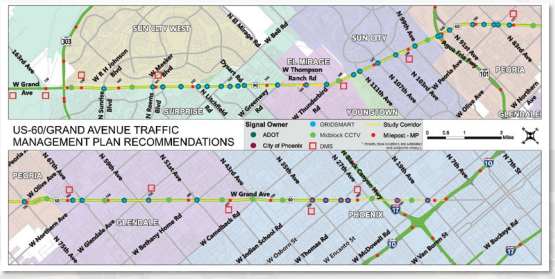

© 2017, All Rights Reserved.

Study Area Projects

Agenda Topic 4

MAG Regional Commuter Rail System Study Update:

- Updating 2010 study;
- Investigate governance and indemnity/liability;
- Estimate completion end of 2017.

© 2017, All Rights Reserved.

Study Area Projects

Agenda Topic 4

Youngtown Transportation Master Plan:

- Developed transportation strategies and identified improvements;
- Recommended transportation policies; and
- Integrated non-motorized transportation into existing corridors.

MARICOPA ASSOCIATION of GOVERNMENTS

© 2017, All Rights Reserved. 11

Study Area Projects

Agenda Topic 4

US-60/Grand Avenue and Thunderbird Road Intersection:

- ADOT project that was recently completed;
- Ties into ADOT project on the US-60/Grand Avenue frontage road, from Greenway Road to Thunderbird Road; and
- Ties into current City of El Mirage project on Thunderbird Road.

MARICOPA ASSOCIATION of GOVERNMENTS

© 2017, All Rights Reserved. 12

Study Area Projects

Agenda Topic 4

Additional potential nearby projects from Freeway Rebalancing include:

- US-60/Grand Avenue Frontage Road reconstruction; and
- SR-101L Agua Fria add lanes (north and south of US-60/Grand Avenue).

Additional potential nearby projects from MCDOT TSP include:

- Del Webb Blvd, US-60 to Thunderbird Blvd;
- 103rd Ave, US-60 to Thunderbird Blvd; and
- Thunderbird Blvd, 103rd Ave to Cedar Drive.

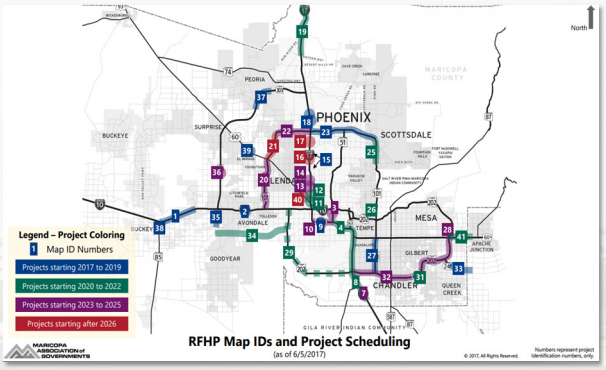

MARICOPA ASSOCIATION of GOVERNMENTS

© 2017, All Rights Reserved. 13

Study Area Issues

Agenda Topic 5

- Limited number of Agua Fria River crossings funnels high volume of traffic onto US-60/Grand Avenue.
- Concerns about potential changes of access at 113th Avenue and 111th Avenue.
- Concerns about potential changes of access to Banner Boswell Medical Center for emergency services.
- Concerns about potential changes of access at 91st Avenue.
- Concerns about property impacts/right-of-way needs from potential improvements.
- Heavy traffic flow between 99th Avenue and SR-101L.
- Agua Fria River and New River crossings are vertical geometric control points for BNSF Railway.
- Safety concerns with corridor crash hot-spots at:
  - Thunderbird Road;
  - 111th Avenue; and
  - 91st Avenue.

MARICOPA ASSOCIATION of GOVERNMENTS

© 2017, All Rights Reserved. 14

Study Area Issues

Agenda Topic 5

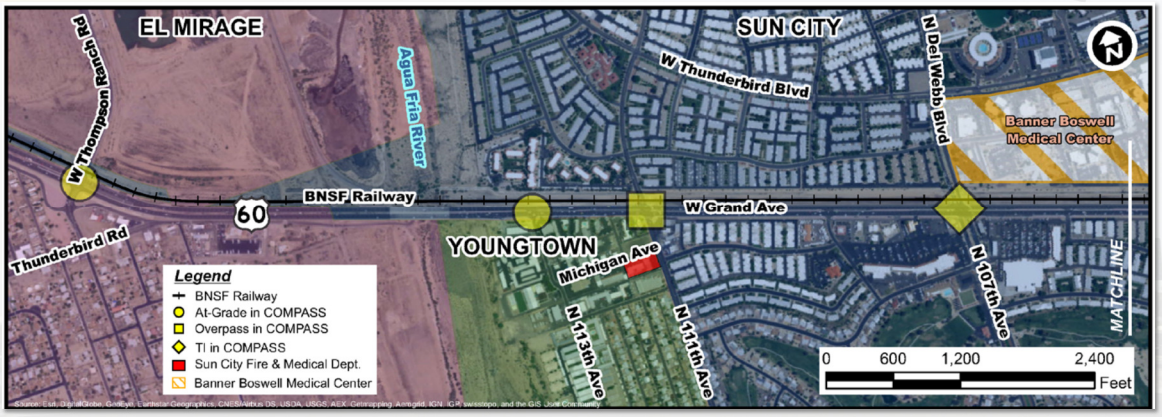

MARICOPA ASSOCIATION of GOVERNMENTS

© 2017, All Rights Reserved. 15

Study Area Issues

Agenda Topic 5

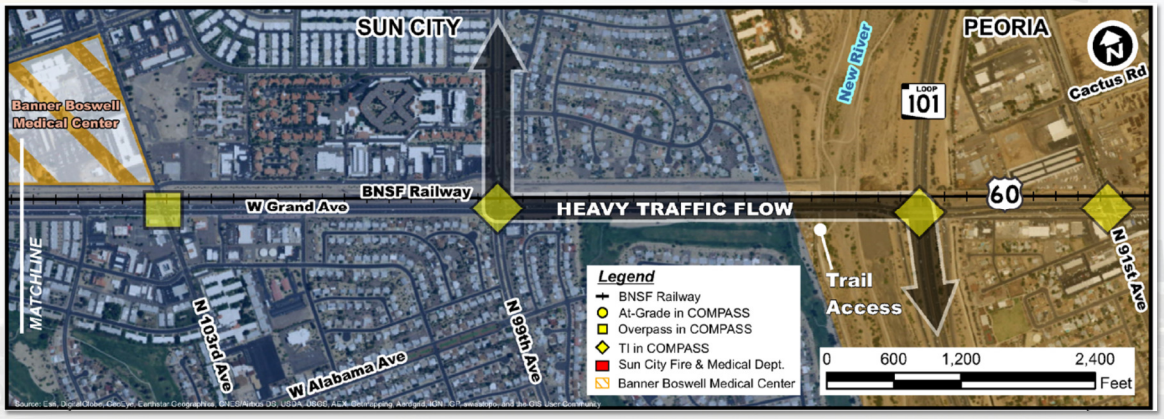

MARICOPA ASSOCIATION of GOVERNMENTS

© 2017, All Rights Reserved. 16

Evaluation Considerations

Agenda Topic 6

- Traffic Operations.
- Safety.
- Access.
- Public input.
- Property impacts.
- Cost.
- Consistent with corridor vision and Goals and Objectives.
- Compatible with transit initiatives.
- Others?

MARICOPA ASSOCIATION of GOVERNMENTS

© 2017, All Rights Reserved. 17

Next Steps

Agenda Topic 7

Task 1: Initiate Project
- Kickoff Meeting
- Develop Project Management Plan
- **July 2017**

Task 2: Concept Development
- Focus Group and One-on-One Meetings
- Planning Partner Consensus Meeting
- **December 2017**

Task 3: Concept Evaluation
- Develop Recommendations
- Develop Technical Memorandum
- Develop Implementation Strategy
- Planning Partner Implementation Meeting
- Public Meeting
- **July 2018**

Task 4: Document Project
- Project Report
- Planning Partner Meeting
- **April 2019**

Task Underway

MARICOPA ASSOCIATION of GOVERNMENTS

© 2017, All Rights Reserved. 18

US-60/Grand Avenue Sun City Implementation Study

Kickoff Meeting
July 26, 2017

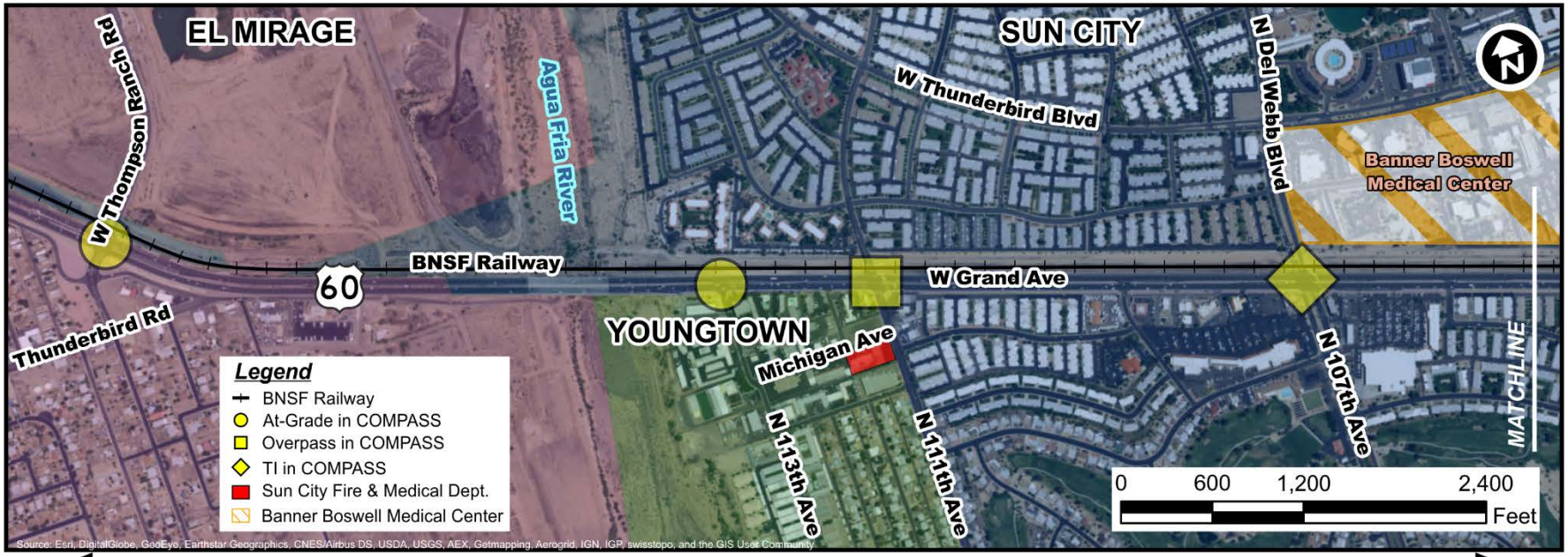

MAG, ADOT, BNSF Railway

El Mirage

- Tie into new intersection at W Thompson Ranch.
- Limited number of Agua Fria river crossings funnels traffic onto US-60/Grand Avenue.
  - Nearest river crossing to north is Bell Road.
  - Nearest river crossing to south is Olive Avenue.
- Highest volume location within the US-60/Grand Avenue COMPASS project corridor.
- Agua Fria crossing is geometric control point for BNSF Railway.

Youngtown, Sun City Fire & Med

- COMPASS shows full access on 113th and an overpass at 111th.
- Overpasses and TIs eliminate at-grade railroad crossings.
- Youngtown concerned about loss of access.
  - 111th is prime commercial corridor.
- Sun City Fire & Medical Deptartment in the southwest corner of 111th needs access to US-60/Grand Avenue.
- Potential for BNSF Railway vertical adjustment.

Sun City, MCDOT, Banner Boswell Health

- COMPASS shows a MUD at 107th.
- Overpasses and TIs eliminate at-grade railroad crossings.
- Banner Boswell concerned about access and emergency vehicle routes.
- Sun City concerned about increase in vehicular traffic within neighborhoods.
- Potential for BNSF Railway vertical adjustment.

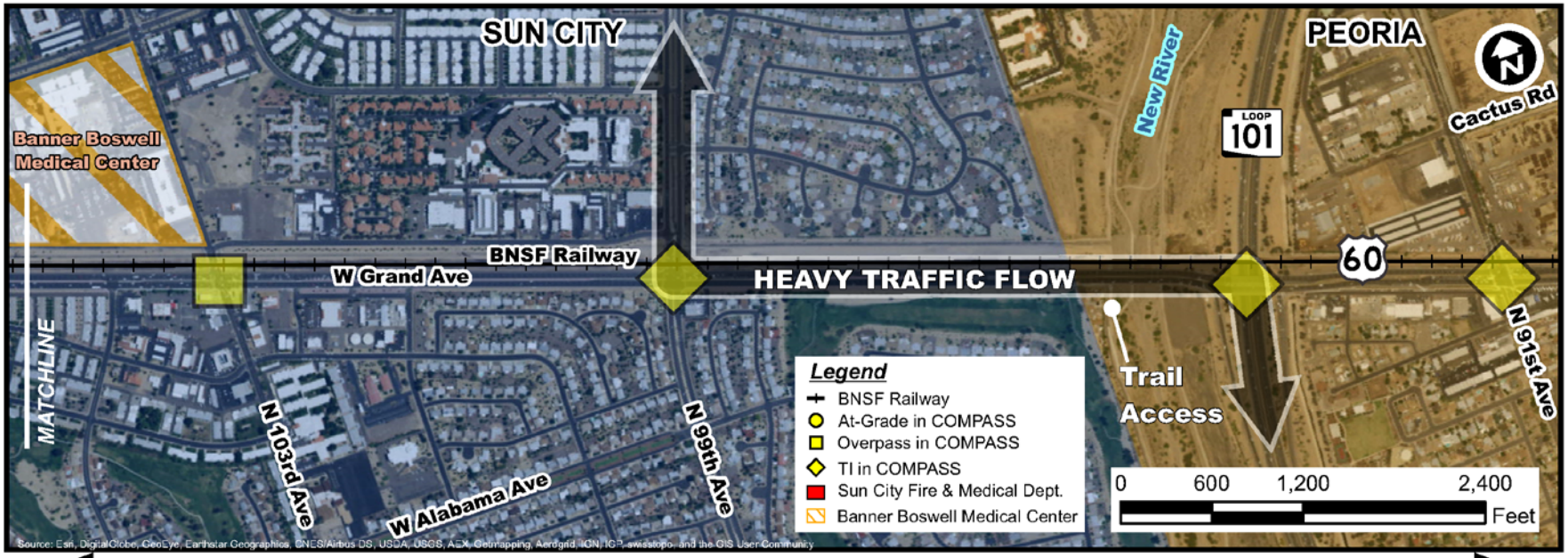

MAG, ADOT, BNSF Railway

Sun City, MCDOT, Banner Boswell Health

- COMPASS shows an overpass at 103rd.
- COMPASS shows a MUD at 99th.
- Overpasses and TIs eliminate at-grade railroad crossings.
- Banner Boswell concerned about access and emergency vehicle routes.
- Sun City concerned about increase in vehicular traffic within neighborhoods.
- Potential for BNSF Railway vertical adjustment.
- TIs introduce weaving between 99th and SR-101L interchange.
- Safety is an ongoing concern at this location.

Peoria

- COMPASS shows an upstream signalized crossover at 91st.
- COMPASS introduces EB RT pocket lane at SR-101L.
- Overpasses and TIs eliminate at-grade railroad crossings.
- Peoria concerned about access limitations on 91st Avenue.
- New River crossing is geometric control point for BNSF Railway.

NOTES

US-60/Grand Avenue
Sun City Implementation Study

Thunderbird Road-Thompson Ranch Road to 91st Avenue

Peoria Meeting
August 17, 2017

ATTENDEES
See attached sign-in sheet.

HANDOUTS
Agenda, Study Area Map.

Quinn Castro, MAG Project Manager, convened the meeting at 9:30 A.M.

1. INTRODUCTIONS
Ms. Castro welcomed everyone and asked all participants to introduce themselves.

2. PROJECT OVERVIEW
Ms. Castro indicated that the purpose of the meeting was to provide the City of Peoria with a better understanding of the project now that the Study Area includes the intersection of 91st Avenue. Ms. Lund discussed the importance of the inclusion of the 91st Avenue intersection in the project. The City indicated that there are concerns with upsetting the public by presenting an unfunded, unprogrammed solution. Mr. Pagnard indicated that the project is concept development and geometric refinements, it is not a DCR. Mr. Rahimi indicated that the traffic operations problem is growing daily. The City will review will review the alternatives to identify fatal flaws. Mr. Pagnard indicated that the earliest the project could be built is after 2026 as there is no funding currently identified. If there are changes in business between now and the construction date, there may be an opportunity to acquire needed right-of-way for a traffic interchange solution.

3. STUDY AREA LIMITS
Ms. Castro stated that there has been no funding identified and that the project is a study update only. Ms. Castro stated that the area is ideal for the potential extension of Prop 400 programming and that the study will likely be a catalyst for future funding. City staff indicated the following items of note within the Study Area:

1. There are several development pre-applications for development at the southeast corner of 91st Avenue and US-60/Grand Avenue.
2. The eastbound to northbound movement for CenturyLink at Cactus Rd and 91st Avenue is very difficult.
3. The Traffic Interchange (TI) concept at 91st Avenue identified in the US-60/Grand Avenue COMPASS project requires right-of-way takes; it is difficult for the City to support business takes.
4. There is the possibility for a travel connection at New River Trail, but it will not be ADA accessible as there is no ADOT permit for the project. Ms. Lund indicated that this connection will likely be an in-house design.
5. Mr. Rahimi stated that he feels there should be a focus on 91st Avenue and US-60/Grand Avenue as this is one of the most challenging intersections within the original US-60 study area.

7. NEXT STEPS

Ms. Castro thanked attendees for their participation and reviewed project next steps:

- Planning Partners will inform the study team of other relevant recent or upcoming projects in the study area.
- B&N will begin coordination for the one-on-one meetings.

Meeting was adjourned at approximately 10:15 A.M.

US-60/Grand Avenue
Sun City Implementation Study

Thunderbird Road/Thompson Ranch Road to 91st Avenue

SIGN-IN SHEET

City of Peoria Meeting
Thursday, August 17, 2017
9:30 a.m.
City of Peoria

Present	Name	Agency
ACL	Adina Lund	City of Peoria
DN	Dan Nissen	City of Peoria
JR	Jamal Rahimi	City of Peoria
	Chris Lemka	City of Peoria
	Andy Gaebler	Peoria
QQC	Quinn Castro	MAG
	Jason Pagnard	Burgess & Niple
DL	David Lenzer	Burgess & Niple

NOTES

US-60/Grand Avenue
Sun City Implementation Study

Thunderbird Road-Thompson Ranch Road to 91st Avenue

Youngtown Meeting
October 27, 2017

ATTENDEES
See attached sign-in sheet.

HANDOUTS
Agenda, Study Area Roll Plot.

Quinn Castro, MAG Project Manager, convened the meeting at 11:10 A.M.

1. INTRODUCTIONS
Ms. Castro welcomed everyone and asked all participants to introduce themselves.

2. PROJECT OVERVIEW
Mr. Pagnard provided a brief overview of past studies including the Youngtown Transportation Masterplan and the MAG Corridor Optimization, Access Management Plan and System Study (COMPASS) and the geographic and traffic characteristics of the project area within and adjacent to Youngtown.

Mr. Hazlett indicated that the forecasted volumes along US-60/Grand Avenue are equivalent to traffic volumes along SR 101L.

3. FIRE STATION AND EMERGENCY ACCESS
Mr. LeVault inquired about how the planned fire station at the corner of 111th Avenue and Michigan Avenue would access both 111th Avenue and US-60/Grand Avenue. Mr. Deadman confirmed that the bays will empty the firetrucks onto 111th Avenue. Mr. Pagnard acknowledged that the COMPASS alternative would not permit access to 111th Avenue or quick access to US-60/Grand Avenue with the indicated fire station site layout. Mr. Anderson stated that the planned fire station may have been under development, but it was not known by the design team at the time of the COMPASS development the location or layout of the planned fire station. Mr. Hazlett acknowledged that a discussion engaging emergency services was needed after COMPASS; the current study and this meeting are a part of that discussion.

Mr. LeVault stated that the new fire station will replace the current fire station. The current fire station responds to 300 to 400 calls a month, 92% of which are medical related. Through intergovernmental agreements, the fire station serves Sun City, El Mirage, Youngtown, and others. Mr. Deadman added that approximately 140 calls a month are responses to calls west of the Agua Fria. Mr. Deadman further stated that the railway traffic currently impacts approximately 10 calls a month and that there are procedures in place which redirects calls to other stations when the railway is active. Mr. Hazlett stated that the frequency of rail trips can change. Currently, there are 8 trains a day on the railway. The peak frequency was approximately 30 trains a day. The addition of commuter rail would also impact the frequency.

Mr. LeVault and Mr. Deadman indicated that maintaining access to 111 Avenue and US-60/Grand Avenue are key. It was indicated that there is also a Maricopa County Sheriff Office Substation in Youngtown.

4. MODIFICATION TO ALTERNATIVE

Mr. Anderson suggested investigating keeping 111th Avenue at grade to maintain access to and from the fire station and railway and elevating or depressing US-60/Grand Avenue. Mr. LeVault inquired about grade separating other crossings and keeping the 111th Avenue intersection with US-60/Grand Avenue. Mr. Hazlett answered that the issue is traffic along US-60/Grand Avenue and that while separating other crossings will help, there will likely be issues at 111th Avenue. Mr. Hazlett indicated that the forecasted traffic volume show that the issues will begin in approximately 2035. Mr. Hazlett indicated that the traffic model includes the construction of Northern Parkway.

Mr. Anderson also suggested investigating splitting US-60/Grand Avenue through and local traffic utilizing a frontage road system with potential elevation differences separating the through and local traffic.

5. EVALUATION CONSIDERATIONS

Mr. Pagnard indicated that the process is to understand the priorities, concerns and issues of the stakeholders, to address concerns with alternatives, and to meet again with stakeholders to receive feedback on new design.

Mr. LeVault indicated that the primary focus of Youngtown is public safety (emergency response).

6. NEXT STEPS

Mr. Pagnard indicated that the next steps include meetings with other stakeholders over the next few weeks, including a specific meeting for emergency responders. The design team will then update the alternatives considering all received feedback.

Mr. Pagnard suggested that a follow-up meeting with Youngtown take place in January.

Meeting was adjourned at 12:05 P.M.

US-60/Grand Avenue
Sun City Implementation Study

Thunderbird Road/Thompson Ranch Road to 91st Avenue

SIGN-IN SHEET

Town of Youngtown One-on-One
Friday, October 27, 2017
10:00 a.m.
Town of Youngtown
Town Hall Conference Room

Present	Name	Agency
QC	Quinn Castro	MAG
BH	Bob Hazlett	MAG
	Grant Anderson	Town of Youngtown
	Jeanne Blackman	Town of Youngtown
ML	Michael LeVault	Town of Youngtown
DL	David Lenzer	Burgess & Niple
JP	Jason Pagnard	Burgess & Niple
RD	RON DEADMAN	SUN CITY FIRE DISTRICT

NOTES

US-60/Grand Avenue
Sun City Implementation Study

Thunderbird Road-Thompson Ranch Road to 91st Avenue

Emergency Responders Meeting
Cottonwood Conference Room at the Maricopa Association of Governments
October 31, 2017

ATTENDEES
See attached sign-in sheet.

HANDOUTS
Study Area Plots.

Quinn Castro, MAG Project Manager, convened the meeting at 1:30 P.M.

1. INTRODUCTIONS
Ms. Castro welcomed everyone and asked all participants to introduce themselves.

2. PROJECT OVERVIEW
Mr. Pagnard and Mr. Hazlett provided a brief overview of the initial MAG Corridor Optimization, Access Management Plan and System Study (COMPASS) and the geographic and traffic characteristics of the project area within and adjacent to the project study area. Mr. Hazlett stated that the improvements between the Agua Fria River and the 91st Avenue are unfunded and that the currently programmed projects extend through 2026.

Mr. Pagnard stated that the COMPASS plan shows full access interchanges with Grand Avenue and 107th Avenue and 99th Avenue and eliminates direct access between Grand Avenue and 111th Avenue and Grand Avenue and 103rd Avenue. The COMPASS plans also show improving access between Grand Avenue and 113th Avenue.

Mr. Hazlett indicated that the forecasted volumes along US-60/Grand Avenue are equivalent to traffic volumes along SR 101L.

3. EMERGENCY ACCESS
Ms. Linyard inquired if the design is curtailed for specific demographics of the study area considering the average age of the residents in Sun City. It was stated that ensuring the crossing facilities worked well with golf carts could be taken into consideration, but

that a stand-alone golf cart lane would not likely be constructed. It was confirmed that there is golf cart specific parking at Banner Boswell.

Mr. Chagolla asked if the MCSO had been involved in the original COMPASS development. Mr. Hazlett stated that MCSO was contacted and that COMPASS was developed 2-4 years ago.

Mr. Chagolla stated that access to 111th Avenue is critical for their response time to Youngtown. Mr. Chagolla also stated that access at 107th Avenue and 99th Avenue are key alternative routes for their responses. The nearest MCSO substation is located at Dysart and Bell and that MCSO is contracted with Youngtown to provide police services. Mr. Chagolla stated that that substation responds to the most calls for service. Most of these calls are in Sun City and Sun City West, and then developed and non-annexed portions of the county. The area bordered by Grand Avenue to the north, Dysart to the west, 99th to the east, and Olive to the south is coded as 343B by MCSO. The area bordered by Grand Avenue to the south, Dysart to the west, 99th to the east, and Bell to the north is coded as 342 by MCSO.

Mr. Chagolla and Mr. Deadman stated that there is anecdotal evidence about a significant number of golfcart crashes in Youngtown and Sun City. `

Ms. Linyard stated that ambulances use 103rd Avenue to access the emergency department (ED) and that it a priority to maintain access between 103rd Avenue and Grand Avenue. Ms. Linyard stated that the main entrance for the hospital is off of Thunderbird. The ED currently sees approximately 46,000 visits a year and is anticipated to increase to 60,000 visits a year. The average patient age is 75. Ms. Linyard stated that while a new ED is planned, the main access is planned to remain off of 103rd Avenue. Mr. Deadman stated that he had contacted other emergency responders in other parts of the country to inquire how they provided emergency access in similar situations. Mr. Deadman indicated that the feedback he received is that a dedicated emergency responder's lane was developed through parking lots, but that inevitably non-emergency responders would use the lane and block it.

4. ACCESS PREFERENCES

Mr. Hazlett asked each representative to indicate their access priorities among 111th Avenue, 107th Avenue, 103rd Avenue and 99th Avenue.

Priority	MCSO	Sun City Fire	Banner Boswell*
#1	111th	99th	103rd
#2	99th	111th	107th
#3	107th	103rd	-
#4	103rd	107th	-

Ms. Linyard indicated that 103rd was a very high priority and that 107th would be for non-emergency access. She indicated that the hospital does not have a preference between 111th and 99th access.

5. NEXT STEPS

Mr. Pagnard indicated that the next steps include collecting traffic counts and then updating the volume forecasts. Then alternatives will be developed incorporating the input received from the one-on-one stakeholder meetings.

US-60/Grand Avenue
Sun City Implementation Study

Thunderbird Road/Thompson Ranch Road to 91st Avenue

SIGN-IN SHEET

Emergency Responders One-on-One
Tuesday, October 31, 2017
12:30 p.m.
Maricopa Association of Governments
Cottonwood Conference Room

Present	Name	Agency
QQC	Quinn Castro	MAG
BH	Bob Hazlett	MAG
	Sandi Davis	Banner Health
PL	Paola Linyard	Banner Health
	Wesley Porter	Banner Health
LP	Lindsey Poston	Banner Health
	Kacey Whisler	Banner Health
PC	Paul Chagolla	Maricopa County Sheriff's Office
RD	Ron Deadman	Sun City Fire Department
DL	David Lenzer	Burgess & Niple
JP	Jason Pagnard	Burgess & Niple

NOTES

US-60/Grand Avenue
Sun City Implementation Study

Thunderbird Road-Thompson Ranch Road to 91st Avenue

Peoria Meeting
ER Conference Room at the City of Peoria
November 1, 2017

ATTENDEES
See attached sign-in sheet.

HANDOUTS
Study Area Plots.

Quinn Castro, MAG Project Manager, convened the meeting at 10:00 A.M.

1. INTRODUCTIONS
Ms. Castro welcomed everyone and asked all participants to introduce themselves.

2. PROJECT OVERVIEW AND BACKGROUND
Mr. Pagnard provided a brief overview of the initial MAG Corridor Optimization, Access Management Plan and System Study (COMPASS) and the geographic and traffic characteristics of the project area within and adjacent to the project study area.

Mr. Costa and Mr. Lemka stated that traffic from southbound 91st Avenue at Grand Avenue has two predominant movements: SB to inbound Grand Avenue and SB to outbound Grand Avenue. Mr. Lemka stated that the city camera at the intersection of Cactus Road and 91st Avenue captures the movements and show the large queues. The SB to inbound is the predominant movement in the A.M. The SB to outbound movement is the predominant movement mid-day and P.M. The signal at Grand Avenue and 91st Avenue is operated and timed by ADOT.

Mr. Pagnard stated that while the state has the ability to modify the signal timing remotely, ADOT does not have a camera in this area. Consequently, the state does not change the timing. Mr. Lemka stated that the signal at Grand Avenue and 91st Avenue operates well with the exception of when a train comes through and then it may take as long as 15 minutes for the signal to return to normal operations. Mr. Lemka implied that signal optimization alone would not solve the issues experienced today. Mr. Lemka

stated that the signal at Cactus Road and 91st Avenue operates independently of the other intersections along the Cactus corridor.

Mr. Costa stated that there is a large bus movement because of the bus yard for PUSB in the northwest quadrant of the SR 101L TI with Peoria Avenue.

Mr. Costa recommends reviewing the most recent structure rating forms from ADOT for the railway structure over the rivers. He remembers them being rated lower than he otherwise anticipated. Mr. Hazlett asked if rumble strip installation on the southbound SR 101L ramp would remedy the issue. Mr. Lemka stated that the crashes may be caused by westbound traffic on Cactus Road. Mr. Pagnard stated that B&N would perform a high-level crash analysis at the intersection of 91st Avenue and Cactus Road to discern crash patterns.

City staff requested that the sight distance at the Cactus Road intersection with 91st Avenue be investigated. There is anecdotal evidence that there is a high frequency of crashes near this intersection. It was noted that the stretch of 91st Avenue between Grand Avenue and Cactus Road is generally handling regional—not local—traffic due to the configuration of the interchanges at SR 101L and Grand Avenue.

3. MODIFICATION TO ALTERNATIVE

Mr. Lemka stated removing the train from the intersection of 91st Avenue and Grand Avenue should resolve the issue. If the elevation of the train were modified, the alternative could still provide access to the businesses in close proximity to the intersection. Mr. Hazlett stated that the maximum grade for a railway is 1%, with a 0.5% preferred. Mr. Lemka noted that the railway crossing over 91st Avenue is above the grade of Grand Avenue and 91st Avenue. Mr. Lemka asked if an alternative where the railway elevation was increased 0.5 levels and the roadway was lowered 0.5 levels.

Mr. Hazlett suggested extending Cactus Road to the west over SR 101L and the New River. It was noted that extending Cactus Road would have negative effects on the necessary improvements to 99th Avenue.

Mr. Pagnard suggested grade separating the 91st southbound to inbound Grand Avenue traffic eliminating it from the intersection. Mr. Lemka stated that grade separation of the left turns is worth investigating. Mr. Lemka stated that most complaints pertain to this movement and that making them dual left turns at the intersection with Grand Avenue will likely not solve the problem due to specific intersection characteristics. He also stated that the intersection is not a good candidate for double pumping the left turners. Mr. Lemka asked that the turn bay lengths for

outbound Grand Avenue traffic be checked for the right turning movement at 91st Avenue and for the left turning movement at SR 101L.

Mr. Pagnard recommended constructing a transmodeler model of the intersection improvement ideas at the 91st Avenue intersection with Grand Avenue and then analyze different "what-if" scenarios involving select movements and the railway.

4. MISCELLANEA

Ms. Lund inquired about anticipated impacts to pedestrians and bicyclists along Grand Avenue within the City of Peoria as part of any COMPASS related project. No specific restrictions were identified. Mr. Costa stated that there is a county hospital east of downtown Peoria.

4. NEXT STEPS

Mr. Pagnard indicated that the next steps include collecting traffic counts and then updating the volume forecasts. Then linework will be developed incorporating the input received from the one-on-one stakeholder meetings.

US-60/Grand Avenue
Sun City Implementation Study

Thunderbird Road/Thompson Ranch Road to 91st Avenue

SIGN-IN SHEET

City of Peoria One-on-One
Wednesday, November 1, 2017
10:00 a.m.
City of Peoria
ER Conference Room

Present	Name	Agency
QQC	Quinn Castro	MAG
BH	Bob Hazlett	MAG
ACL	Adina Lund	City of Peoria
DL	David Lenzer	Burgess & Niple
JP	Jason Pagnard	Burgess & Niple
RAC	Rich Costa	City of Peoria
CBZ	Chris Lemkes	City of Peoria

NOTES

US-60/Grand Avenue
Sun City Implementation Study

Thunderbird Road-Thompson Ranch Road to 91st Avenue

Maricopa County Meeting
Office of Denise Lacey at the Maricopa Department of Transportation
November 2, 2017

ATTENDEES
See attached sign-in sheet.

HANDOUTS
Study Area Plots.

Quinn Castro, MAG Project Manager, convened the meeting at 9:00 A.M.

1. INTRODUCTIONS
Ms. Castro welcomed everyone and asked all participants to introduce themselves.

2. PROJECT OVERVIEW AND BACKGROUND
Mr. Pagnard provided a brief overview of the initial MAG Corridor Optimization, Access Management Plan and System Study (COMPASS) and the geographic and traffic characteristics of the project area within and adjacent to the project study area.

Mr. Pagnard and Mr. Hazlett provided overviews of the meetings held with the representatives from MCSO, Banner Boswell, and Sun City Fire.

Mrs. Lacey stated that Sun City is a vocal, knowledgeable and densely populated portion of unincorporated Maricopa County. Mrs. Lacey further stated that county concerns in this area include accessibility across Grand Avenue for pedestrians, bicyclists, golf carts, and motorized wheelchairs. Access to medical facilities is key. Mrs. Lacey inquired about potential transit impacts. Mr. Pagnard stated that the existing transit lines in the project area include a bus route along 111th Avenue and one along Grand Avenue. Mr. Pagnard stated that the nearest planned commuter rail stations are northwest in El Mirage and southeast near downtown Peoria.

3. MODIFICATION TO ALTERNATIVE
Mr. Pagnard stated that 103rd Avenue will likely have full access from Grand Avenue so it continues to provide access to the emergency department from Grand Avenue. Mrs.

Lacey agreed. The intersection of 99th Avenue and Grand Avenue will need to remain a TI (traffic interchange) due to the forecasted traffic volumes. Mr. Pagnard stated that an alternative to provide access at this location is to provide a Median Urban Diamond at one of the two TIs and a Tight Urban Diamond at the other. Mr. Pagnard stated alternatively that a frontage road system could be constructed to accommodate a split interchange configuration. Mr. Pagnard stated that consistency through the corridor is important when it comes to ingress and egress from Grand Avenue to the city streets so as to not violate driver expectations.

Mrs. Lacey stated that 107th Avenue should be designed with golf carts in mind, specifically when it comes to its typical section and grades.

Mr. Hazlett stated that improvements to the parallel routes of Cactus, Peoria, and Thunderbird roadways should be considered to reduce the demand on Grand Avenue. Mrs. Lacey stated that the county prefers the current operations of Thunderbird to a higher capacity roadway. The potential of connecting Peoria Avenue across the New River was discussed. Mrs. Lacey stated that the County has not investigated constructing the crossing. Mr. Pagnard stated that its construction was included within the Youngtown Masterplan. Mr. Hazlett and Mrs. Lacey agreed that a traffic model should be analyzed including the river crossing to determine the potential benefits of constructing the crossing. Mrs. Lacey stated it should be modeled as no more than a 4 lane arterial at 35 mph. Mrs. Lacey would like to see the results and wants the southern limits of the analysis to include Northern Parkway.

4. NEXT STEPS

Mr. Pagnard indicated that the next steps include collecting traffic counts and then updating the volume forecasts. Then linework will be developed incorporating the input received from the one-on-one stakeholder meetings.

US-60/Grand Avenue
Sun City Implementation Study

Thunderbird Road/Thompson Ranch Road to 91st Avenue

SIGN-IN SHEET

MCDOT One-on-One
Thursday, November 2, 2017
9:00 a.m.
Maricopa County Department of Transportation

Present	Name	Agency
QC	Quinn Castro	MAG
BH	Bob Hazlett	MAG
	Denise Lacey	MCDOT
DL	David Lenzer	Burgess & Niple
JP	Jason Pagnard	Burgess & Niple

NOTES

US-60/Grand Avenue
Sun City Implementation Study

Thunderbird Road-Thompson Ranch Road to 91st Avenue

ADOT Meeting
Palo Verde Conference Room at the Maricopa Association of Governments
November 3, 2017

ATTENDEES
See attached sign-in sheet.

HANDOUTS
Study Area Plots.

Quinn Castro, MAG Project Manager, convened the meeting at 1:30 P.M.

1. INTRODUCTIONS
Ms. Castro welcomed everyone and asked all participants to introduce themselves.

2. PROJECT OVERVIEW
Mr. Pagnard and Mrs. Castro provided a brief overview of the initial MAG Corridor Optimization, Access Management Plan and System Study (COMPASS) and the geographic and traffic characteristics of the project area within and adjacent to the project study area.

Mr. Pagnard indicated that the forecasted volumes along US-60/Grand Avenue are forecasted to reach the lower range of interstate volumes.

Mr. Brozich indicated that there is a DPS substation at SW quadrant of the intersection of 111th Avenue and Peoria Avenue.

3. ALTERNATIVE DISCUSSION
Mr. Scott and Mr. Brozich explained that ADOT is experiencing access and speed issues with the TI at Bell Road. The visual cues provide drivers indicators that they are traveling on a freeway. Additionally, the access immediately downstream of the turn lane/Grand Avenue gore points introduce problematic weaves.

Mr. Brozich like the idea of providing half TIs at 99th and 103rd and connecting them. Mr. Beck is intrigued with the potential for converting Grand Avenue into an Arizona

Parkway. Mr. Brozich is interested in grade separating Grand Avenue by depressing it with the Arizona Parkway facilitating access to businesses. This would leave the railway crossings at grade. Potentially add loons along Grand Avenue if Grand Avenue is not depressed. Mr. Scott indicated that a benefit of an Arizona Parkway is that it feels like an arterial, not a freeway, to motorists.

Mr. Pagnard suggested investigating compact CFIs if at grade RR crossings with the railway are acceptable.

Mr. Pagnard stated that consistency through the corridor is important when it comes to ingress and egress from Grand Avenue to the city streets so as to not violate driver expectations.

Mr. Shah inquired about the removal of private access points from Grand Avenue. Mr. Pagnard stated that removing access would require a political champion.

4. NEXT STEPS

Mr. Pagnard indicated that the next steps include collecting traffic counts and then updating the volume forecasts. Then linework will be developed incorporating the input received from the one-on-one stakeholder meetings.

Meeting was adjourned at approximately 2:30 P.M.

US-60/Grand Avenue
Sun City Implementation Study

Thunderbird Road/Thompson Ranch Road to 91st Avenue

SIGN-IN SHEET

ADOT One-on-One
Friday, November 3, 2017
1:30 p.m.
Maricopa Association of Governments
Palo Verde Conference Room

Present	Name	Agency
QQC	Quinn Castro	MAG
	Bob Hazlett	MAG
AB	Anthony Brozich	ADOT
RS	Rimpal Shah	ADOT
	James Windsor	ADOT
SB	Scott Beck	ADOT
DL	David Lenzer	Burgess & Niple
JP	Jason Pagnard	Burgess & Niple

NOTES

US-60/Grand Avenue
Sun City Implementation Study

Thunderbird Road-Thompson Ranch Road to 91st Avenue

Planning Partners Meeting
City of El Mirage
December 13, 2018

ATTENDEES
See attached sign-in sheet.

HANDOUTS
Study Area Plots.

Quinn Castro, MAG Project Manager, convened the meeting at 10:00 A.M.

1. INTRODUCTIONS
Ms. Castro welcomed everyone and asked all participants to introduce themselves.

2. STUDY OVERVIEW AND MAG COMPASS CONCEPTUAL RECOMMENDATIONS
Mr. Pagnard and Mrs. Castro provided a brief overview of the initial MAG Corridor Optimization, Access Management Plan and System Study (COMPASS) and the geographic and traffic characteristics of the project area within and adjacent to the project study area.

Mr. Pagnard provided an update on project progress since the last meeting.

3. PLANNING PARTNER AND STAKEHOLDER INPUT
Mr. Pagnard reviewed the input received from project partners and stakeholders including ADOT, MCDOT, Peoria, Sun City HOA, Youngtown, and Emergency Responders (MCSO, Banner Hospital, and Sun City Fire). This input included the stakeholder input regarding the prioritization of access and improvements. The most critical access point along US-60/Grand Avenue for both Youngtown and the fire department was 111th Avenue. The most critical access point for the hospital was 103rd Avenue. The city of Peoria indicated that there are safety and operation concerns at 91st Avenue.

The project partners and stakeholders did not state strong opinions regarding the 107th Avenue intersection.

4. PRELIMINARY SAFETY AND TRAFFIC OPERATIONS ANALYSIS

Mr. Pagnard reviewed the results of a preliminary safety analysis including stating that the study area has multiple fatalities and incapacitating crashes within the last five years. The severity of the crashes makes improvements to this corridor a potential candidate for safety related funding, depending on the solution. The severe crashes are not concentrated in a specific geographic location; consequently, solutions may need to holistic in nature.

Mr. Pagnard reviewed the existing and projected signal operations for the intersections of US-60/Grand Avenue and 111th Avenue, 107th Avenue, 103rd Avenue, 99th Avenue, the SR-101L TI ramps, and 91st Avenue. The intersection of 91st Avenue and Cactus Road was also discussed. The intersections with the most severe operational issues are US-60/Grand Avenue and 111th Avenue, US-60/Grand Avenue and 99th Avenue, and US-60/Grand Avenue and 91st Avenue.

Mr. Pagnard asked if the project partners were interested in additional safety analysis. The project partners indicated they are interested in additional analysis to determine what solutions qualify for safety-related funding.

Mr. Pagnard asked if the project partners were interested in a microsimulation analysis to better evaluate how the operations of the signals are affected when the regular phasing is interrupted due to railroad crossings. The project partners indicated they are not interested in the microsimulation analysis since it is known that train interruptions degrade the signal operations and that the exact timing of the train interruptions are not known.

Mr. Anderson indicated that since train is not predictable, and it is understood that the presence of the train worsens traffic operations, there is no benefit to develop a microsimulation. Ms. Lund agreed.

5. POTENTIAL CONCEPT REFINEMENTS AND NEXT STEPS

Meeting attendees discussed the potential solutions, prioritization, and funding constraints. It was determined that the study should focus on solutions that would be implemented in approximately 10 years and that could benefit from an extension of Proposition 400. It was also determined that the improvements should be focused at 111th Avenue, 99th Avenue, and 91st Avenue.

Two interim alternatives should be provided at the 111th and 99th avenue intersections: (1) adding, lengthening turn bays, and/or changing lane assignments and (2) further

developing alternatives developed with additional pocket turn bays. Improvements should require minimal to no new right-of-way.

Improvements for the 91st Avenue intersection should focus on the implementation of a Texas-U style ramp to provide access from SR-101L southbound traffic at the SR-101L northbound ramp intersection with US-60/Grand Avenue and the elimination of the existing SR-101L southbound exit ramp to Cactus Road/91st Avenue.

Mr. Anderson requested that the design team investigate interim solutions and that he would consider proposed modifications to the US-60/Grand Avenue intersection with 113th Avenue (such as conversion to a right-in, right-out) if the intersection of Grand Avenue and 111th Avenue was improved and continued to be the primary access to Youngtown. Ms. Lund agreed with the request that the design team develop interim solutions.

US-60/Grand Avenue
Sun City Implementation Study

SIGN-IN SHEET

Thunderbird Road/Thompson Ranch Road to 91st Avenue

Planning Partners Progress Meeting

Thursday, December 13, 2018
10:00 a.m.
City of El Mirage

Present	Name	Agency
	Anthony Brozich	ADOT
	Jorge Gastelum	City of El Mirage
BC	Bryce Christo	City of El Mirage
AL	Adina Lund	City of Peoria
	Dan Nissen	City of Peoria
	Chris Lemka	City of Peoria
CA	Charles Andrews	City of Peoria
QC	Quinn Castro	MAG
	Bob Hazlett	MAG
	Denise Lacey	MCDOT
GA	Grant Anderson	Town of Youngtown
	Cynthia Alvarez	Burgess & Niple
DL	David Lenzer	Burgess & Niple
JP	Jason Pagnard	Burgess & Niple

US-60/Grand Avenue Sun City Implementation Study
Progress Meeting
December 13, 2018

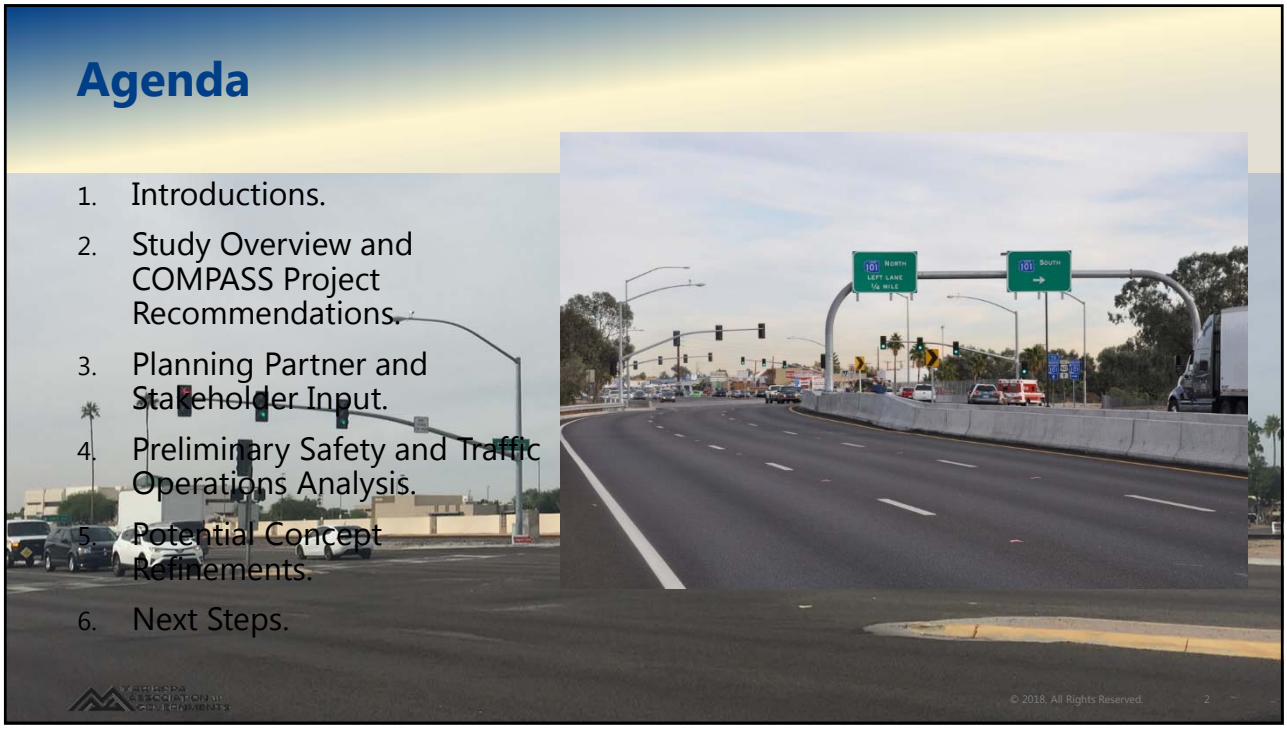
Agenda
1. Introductions.
2. Study Overview and COMPASS Project Recommendations.
3. Planning Partner and Stakeholder Input.
4. Preliminary Safety and Traffic Operations Analysis.
5. Potential Concept Refinements.
6. Next Steps.
© 2018, All Rights Reserved.
2

Project Overview

Agenda Topic 2

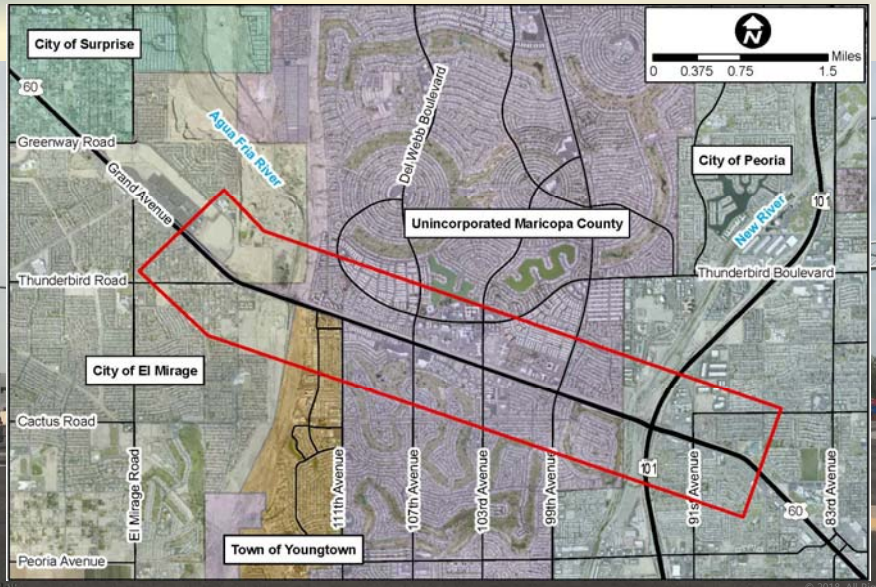

© 2018, All Rights Reserved. 3

Study Goals and Objectives

Agenda Topic 2

- Support stakeholder needs and goals;
- Implement the corridor vision;
- Enhance economic development opportunities;
- Accommodate travel demand;
- Address safety concerns;
- Align with good access management principles; and
- Compliment community transit initiatives.

© 2018, All Rights Reserved. 4

COMPASS Recommendations

Agenda Topic 2

US-60/Grand Avenue COMPASS:

- Created vision statement with guiding principles; and
- Developed access management plan; and
- Identified roadway improvement concepts, including new grade separations.

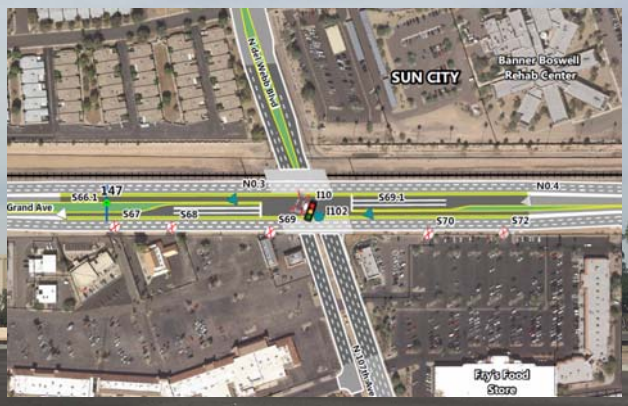

© 2018, All Rights Reserved.

COMPASS Recommendations

Agenda Topic 2

US-60/Grand Avenue COMPASS Vision Statement guiding principles include:

- Preserve and promote transportation capacity;
- Integrate multimodal transportation;
- Support and enhance economic growth;
- Advance safety and security;
- Establish a unified and coordinated approach to land use access;
- Promote a transit-supportive development pattern;
- Encourage coordinated aesthetics; and
- Connect communities in a cost effective manner.

© 2018, All Rights Reserved.

COMPASS Recommendations

Agenda Topic 2

© 2018, All Rights Reserved. 7

Study Area Issues

Agenda Topic 5

© 2018, All Rights Reserved. 8

Planning Partner and Stakeholder Input

Agenda Topic 3

- Concerns about potential changes of access at 113th Avenue and 111th Avenue.
- Concerns about potential changes of access to Banner Boswell Medical Center for emergency services at 107th Avenue and 103rd Avenue.
- Concerns about potential changes of business access at 91st Avenue.
- Concerns about property impacts/right-of-way needs for potential improvements.
- Concerns with the BNSF Railway interface.

© 2018, All Rights Reserved.

Planning Partner and Stakeholder Input

Agenda Topic 3

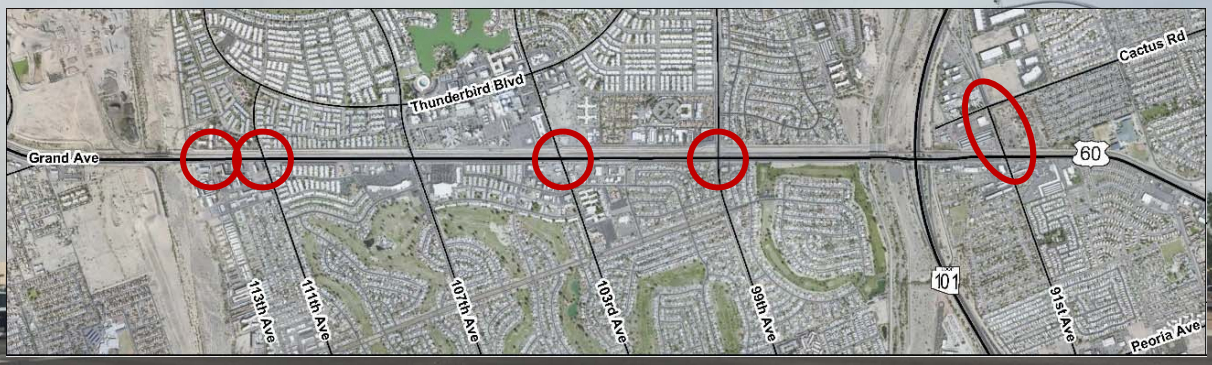

© 2018, All Rights Reserved.

Safety Evaluation (2013-2017)

Agenda Topic 4

Manner of Collision in Multi-Vehicle Crashes	Study Corridor	2017 Statewide Average*
Angle	6.6%	15.0%
Left Turn	4.0%	16.4%
Rear End	***71.2%***	***44.5%***
Head On	0.6%	1.7%
Sideswipe (same)	***15.0%***	***14.6%***
Sideswipe (opposite)	0.5%	1.4%
Rear to Side	0.2%	-
Rear to Rear	0.0%	-
Other	1.7%	-
Unknown	0.3%	0.6%

*Bold, red, italicized text indicates values that exceed 2017 statewide average

Crash Type	Fatal	Incapacitating
Single Vehicle	0	6
Angle	1	1
Left Turn	1	2
Rear End	0	12
Head On	0	0
Sideswipe (same direction)	1	1
Pedestrian	1	0
Other	1	0
Total	**5**	**22**

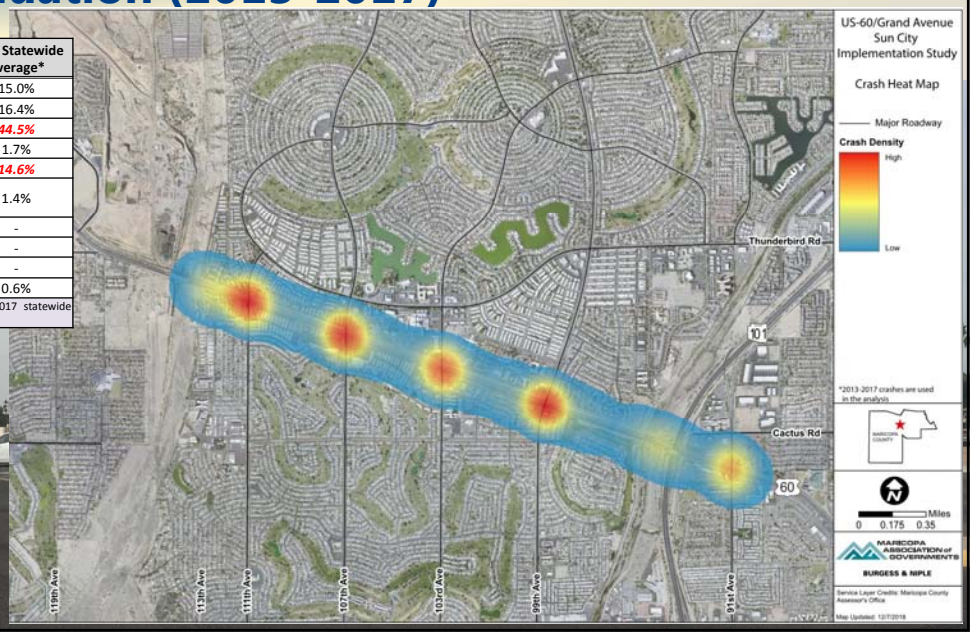

Existing and Future ADT

Agenda Topic 4

- Performed traffic counts.
- Developed more detailed traffic forecast.

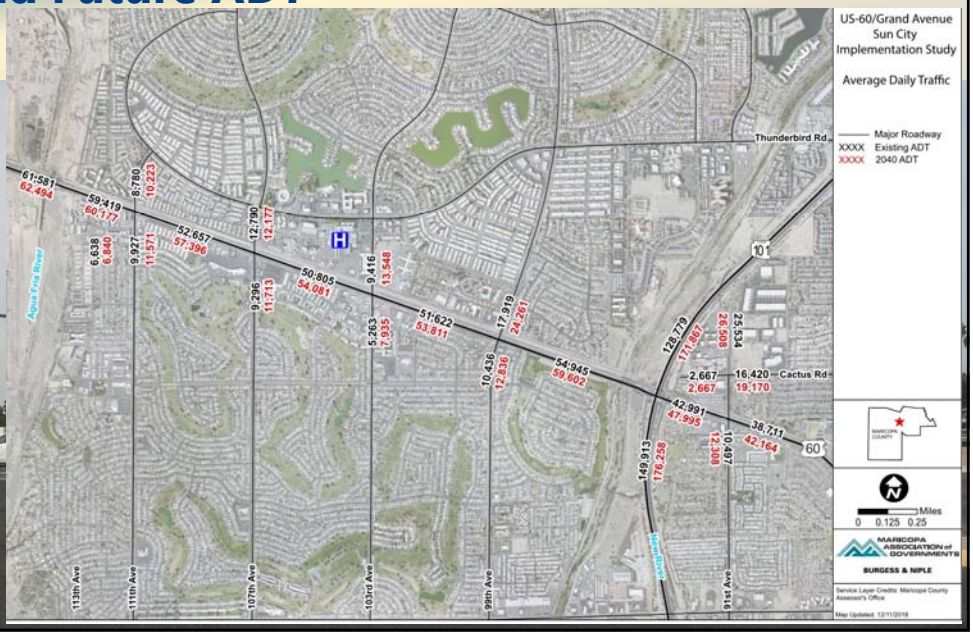

Existing AM LOS

Agenda Topic 5

© 2018, All Rights Reserved.

Existing PM LOS

Agenda Topic 5

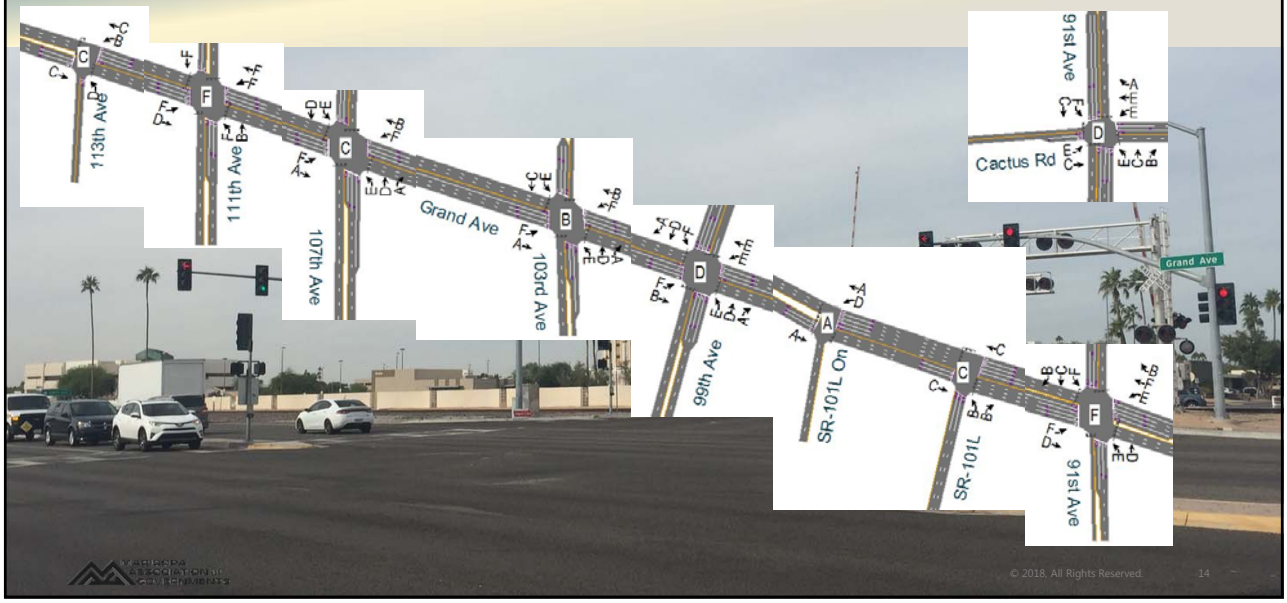

© 2018, All Rights Reserved.

Future AM LOS

Agenda Topic 5

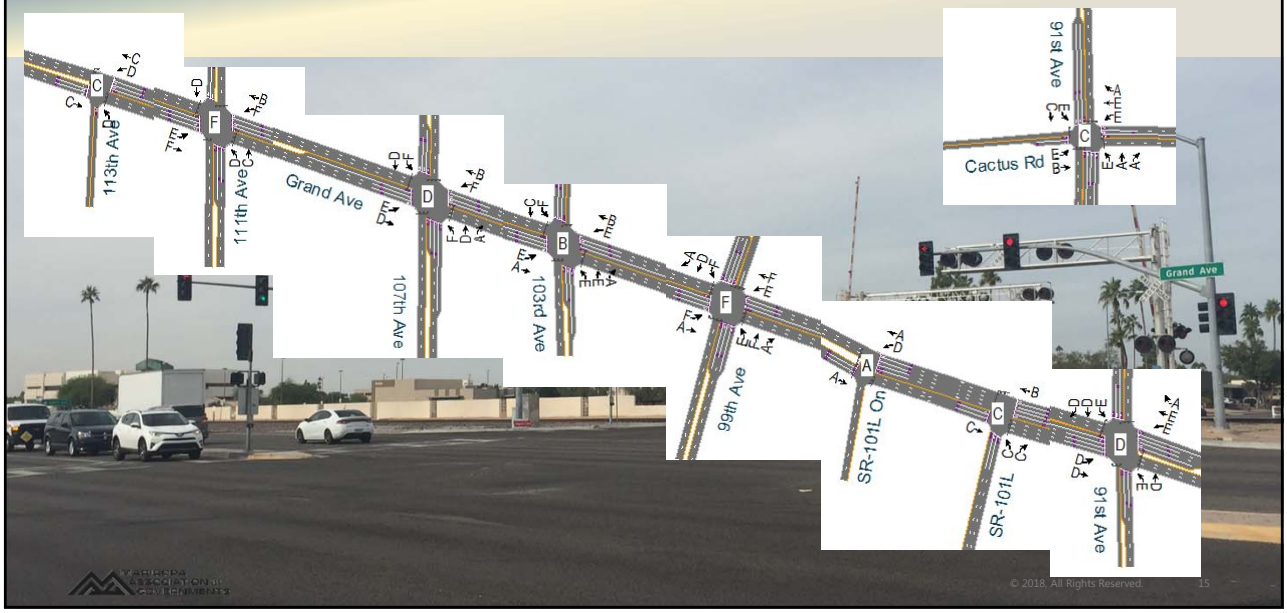

© 2018, All Rights Reserved.

Future PM LOS

Agenda Topic 5

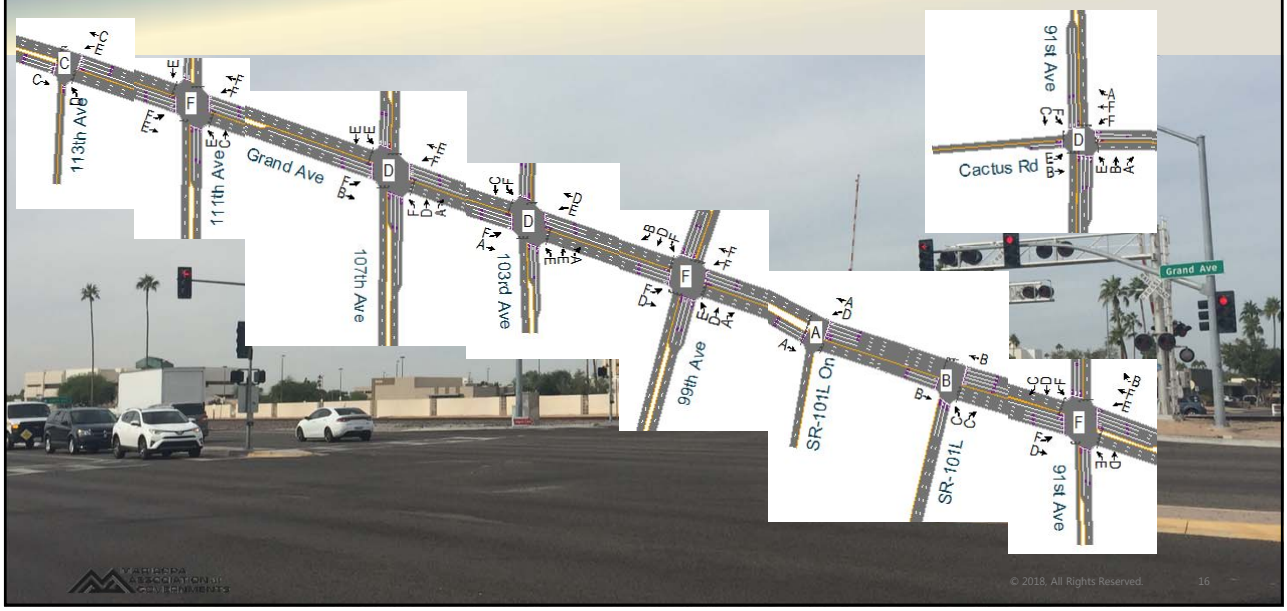

© 2018, All Rights Reserved.

Intersection Overall LOS

Agenda Topic 4

Intersection	Existing Overall LOS		2040 Overall LOS	
	a.m.	p.m.	a.m.	p.m.
113th Ave & Grand Ave	C	C	C	C
111th Ave & Grand Ave	D	F	F	F
107th Ave & Grand Ave	C	C	D	D
103rd Ave & Grand Ave	B	B	B	D
99th Ave & Grand Ave	D	D	F	F
SR-101L SB On-Ramp & Grand Ave	A	A	A	A
SR-101L NB Off-Ramp & Grand Ave	C	C	C	B
91st Ave & Grand Ave	D	F	D	F
91st Ave & Cactus Rd	C	D	C	D

Note: Results use Synchro's built-in methodology to determine LOS.

© 2018, All Rights Reserved.

Potential Concept Refinements

Agenda Topic 5

© 2018, All Rights Reserved.

US-60/Grand Avenue Sun City Implementation Study
Progress Meeting
December 13, 2018

NOTES

US-60/Grand Avenue
Sun City Implementation Study

Thunderbird Road-Thompson Ranch Road to 91st Avenue

Planning Partners Meeting
12030 N Club House Sq, Youngtown, AZ 853635
May 22, 2019

ATTENDEES
See attached sign-in sheet.

HANDOUTS
Agenda.

Quinn Castro, MAG Project Manager, convened the meeting at 2:10 P.M.

Jason Pagnard (Burgess & Niple) and David Lenzer (Burgess & Niple) briefly explained the project background, including the update to the travel demand forecast that has lower traffic volumes than the MAG forecast used during the US-60/Grand Avenue COMPASS project. Mr. Pagnard recapped the discussions from prior meetings that directed the study team to develop interim at-grade solutions.

Grant Anderson (Youngtown) asked about the possibility of grade separations in the corridor, citing the US-60/Grand Avenue COMPASS preferred alternative. Mr. Pagnard explained that the interim solutions do not preclude the possibility of future grade separations. Denise Lacey (MCDOT) explained that the pedestrian safety concerns are best addressed with the grade separations, but the interim solutions address the funding concerns and current failing traffic patterns.

Mr. Lenzer and Mr. Pagnard reviewed the interim improvements concepts, considerations, operations, safety, and costs. In general, the concepts presented address many of the needs for the corridor, except the at-grade crossings with the BNSF Railway.

Regarding the improvements concept at 111th Avenue, Ms. Lacey asked if the improvements would affect pedestrian access and ADA compliance. Ms. Castro mentioned that the signal upgrade to the intersection would be handled by ADOT, and ADA compliance is required for signal upgrades.

Regarding the improvements concept at 99th Avenue, Anthony Brozich (ADOT) inquired about the right-of-way constraints in the area, noting that the proximity of the railroad may prevent the addition of a right-turn lane.

Dan Nissen (Peoria), Mr. Brozich, and Mr. Anderson mentioned that restricting access at Santa Fe Drive on 99th Avenue to right-in right-out only presents issues with access to businesses on Santa Fe drive. Ms. Lacey mentioned that current engineering standards would not permit the left turn present in the existing conditions, as it is too close to the intersection. Mr. Brozich confirmed the standard.

Mr. Brozich inquired about the drainage channel considerations in the improvements. He cited the Bell Road and US-60 traffic interchange project, noting that the drainage strategy constructed at that location has issues with sediment backup.

The concept that was investigated to potentially address operations at 91st Avenue, the Texas-U, fell short of expectations. Attendees discussed the need for additional follow-up regarding potential solutions at 91st Avenue. Mr. Nissen confirmed the need for a subsequent discussion and would facilitate the meeting.

US-60/Grand Avenue
Sun City Implementation Study

Thunderbird Road/Thompson Ranch Road to 91st Avenue

SIGN-IN SHEET

Planning Partners Progress Meeting
Wednesday, May 22, 2019
2:00 p.m.
12030 N Club House Square, Youngtown, AZ 85363
Town of Youngtown Council Chambers

Present	Name	Agency
QQC	Quinn Castro	MAG
AB	Anthony Brozich	ADOT
	Denise Lacey	MCDOT
	Jorge Gastelum	City of El Mirage
BC	Bryce Christo	City of El Mirage
	Adina Lund	City of Peoria
	Charles Andrews	City of Peoria
	Dan Nissen	City of Peoria
	Grant Anderson	Town of Youngtown
	Jason Pagnard	Burgess & Niple
	David Lenzer	Burgess & Niple
	Ravi Ambadipudi	Burgess & Niple
BL	Becca Lengua	Burgess & Niple

City of El Mirage
ADOT
US-60/Grand Avenue Sun City Implementation Study
Planning Partner Meeting
May 22, 2019

Agenda
1. Introductions.
2. Overview of the Project.
3. Draft Recommendations.
4. Next Steps.
© 2018, All Rights Reserved.
2

Project Overview

Agenda Topic 2

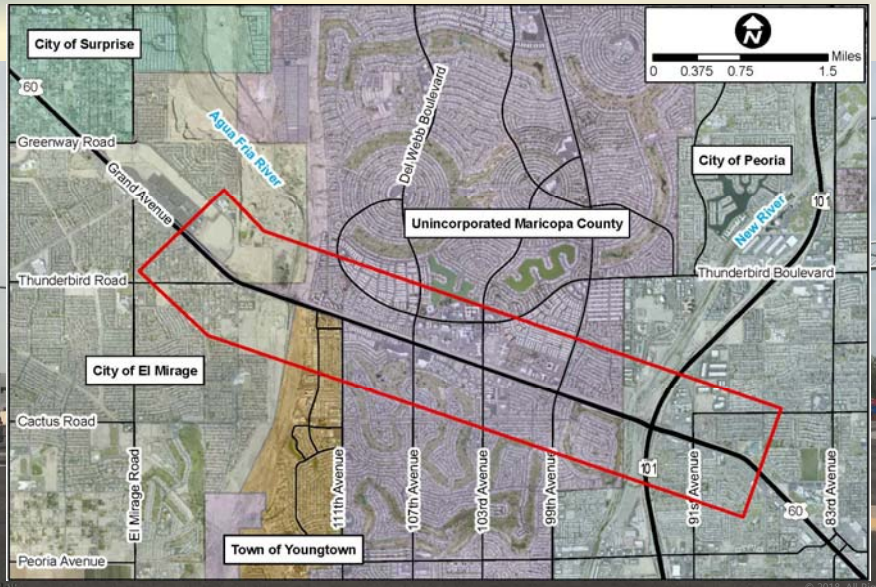

© 2018, All Rights Reserved.

Safety Analysis (2013-2017)

Agenda Topic 3

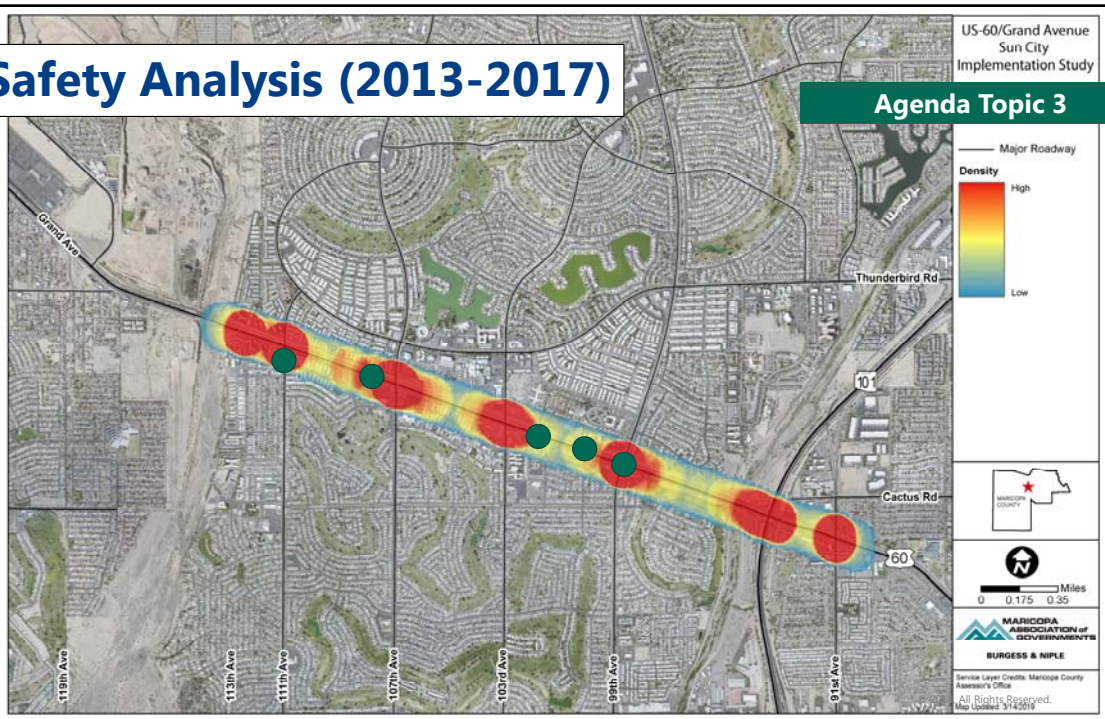

Safety Analysis (2013-2017)

Manner of Collision in Multi-Vehicle Crashes	Study Corridor	2017 Statewide Average*
Angle	6.6%	15.0%
Left Turn	4.0%	16.4%
Rear End	***71.2%***	***44.5%***
Head On	0.6%	1.7%
Sideswipe (same)	***15.0%***	***14.6%***
Sideswipe (opposite)	0.5%	1.4%
Rear to Side	0.2%	-
Rear to Rear	0.0%	-
Other	1.7%	-
Unknown	0.3%	0.6%

*Bold, red, italicized text indicates values that exceed 2017 statewide average

Crash Location	Number of Rear End Crashes	Percent of Total Crashes
Intersections		
111th Avenue	123	70%
99th Avenue	118	76%
91st Avenue	88	57%
Segments		
111th Avenue to 107th Avenue	41	64%
107th Avenue to 103rd Avenue	37	67%
103rd Avenue to 99th Avenue	36	73%
99th Avenue to SR-101L	43	67%

© 2018, All Rights Reserved.

Intersection Overall LOS

Agenda Topic 2

Intersection	2018 Overall LOS		2040 No Build Overall LOS	
	a.m.	p.m.	a.m.	p.m.
113th Ave & Grand Ave	C	D	C	C
111th Ave & Grand Ave	D	F	F	F
107th Ave & Grand Ave	C	C	D	D
103rd Ave & Grand Ave	B	B	B	D
99th Ave & Grand Ave	D	D	F	F
SR-101L SB On-Ramp & Grand Ave	A	A	A	A
SR-101L NB Off-Ramp & Grand Ave	C	C	C	B
91st Ave & Grand Ave	D	F	D	F
91st Ave & Cactus Rd	C	D	C	D

Note: Results use Synchro's built-in methodology to determine LOS.

© 2018, All Rights Reserved.

111th Avenue & US-60/Grand Avenue Current Configuration

Agenda Topic 3

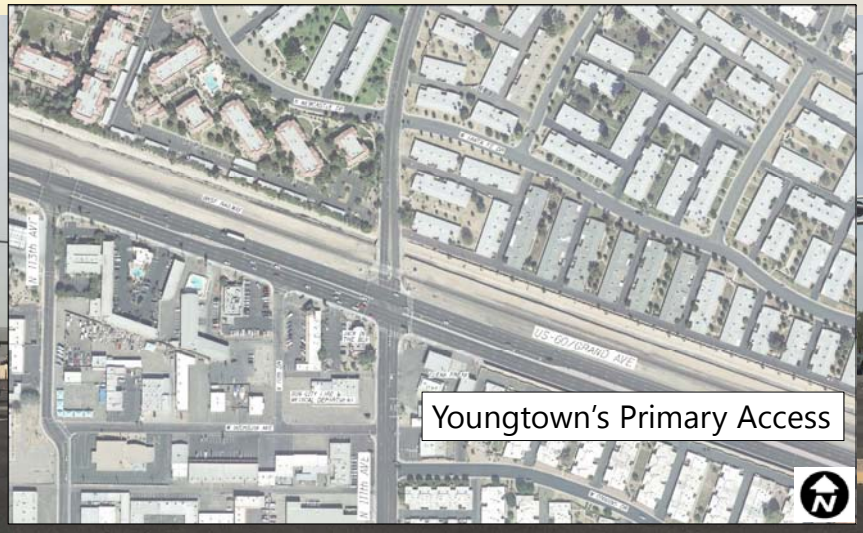

© 2018, All Rights Reserved.

Phase 1 Improvements

Agenda Topic 3

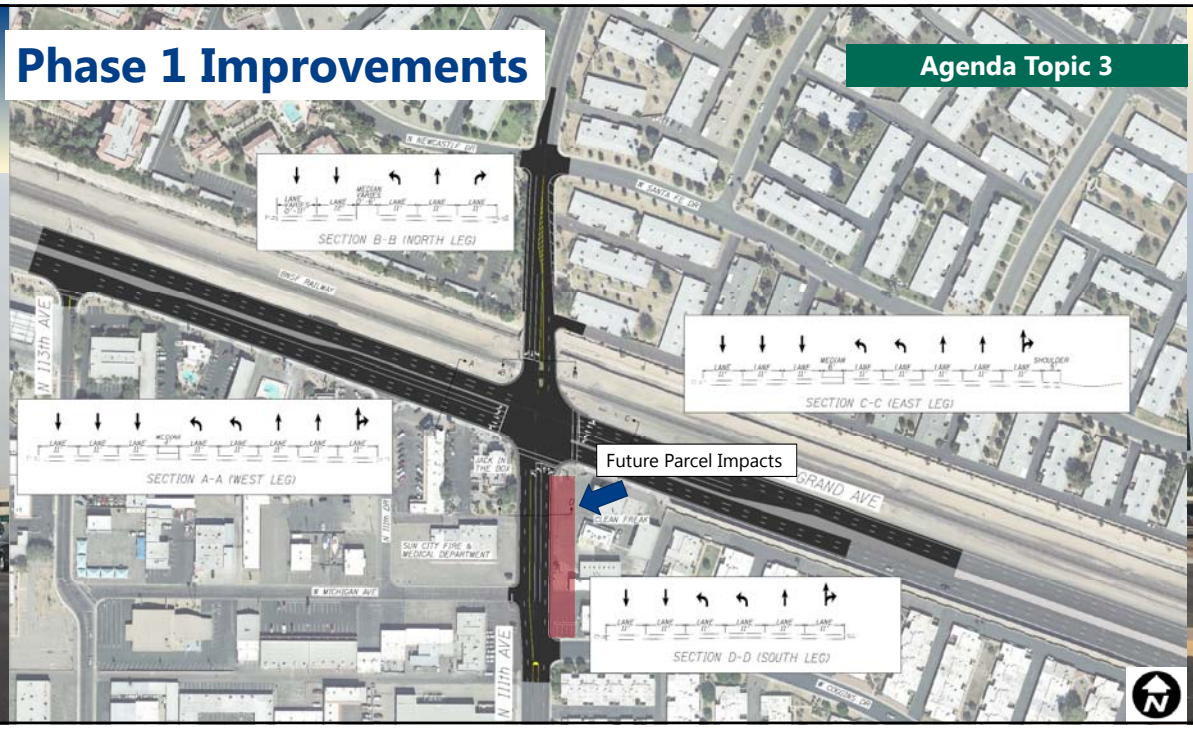

Phase 2 Improvements

Agenda Topic 3

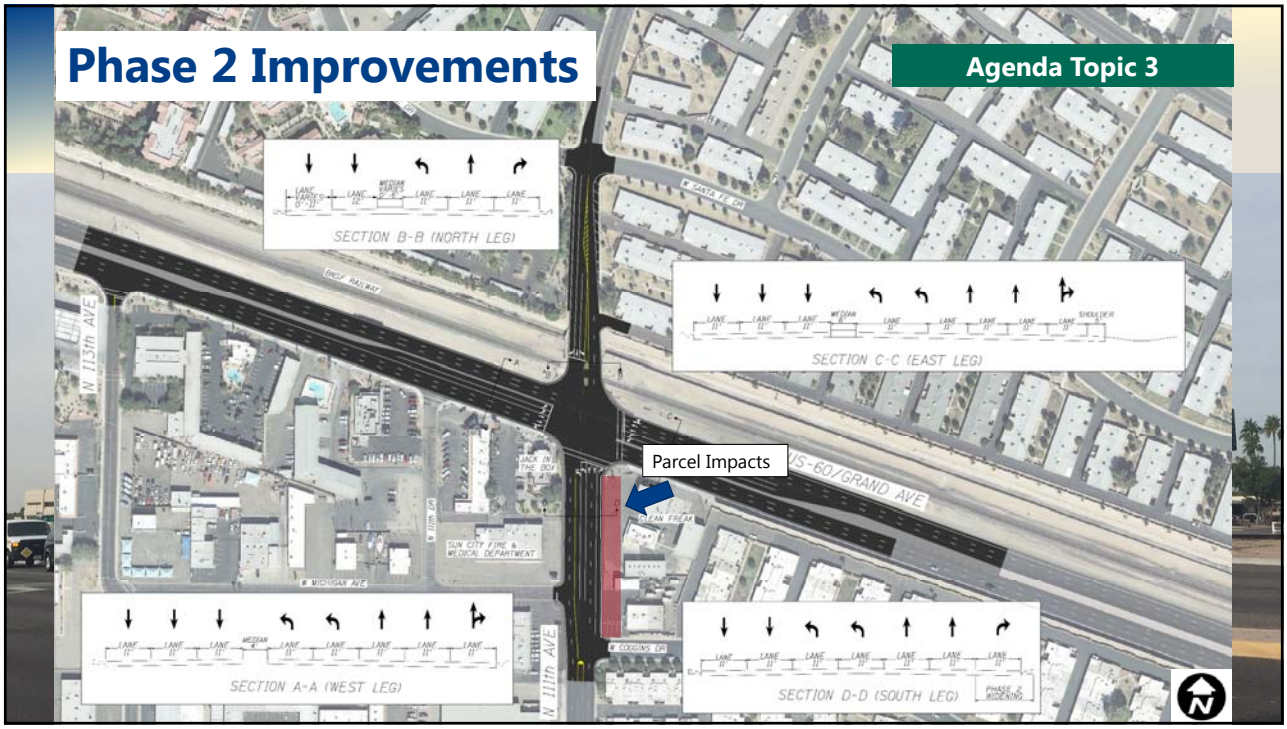

111th Avenue Intersection LOS

Agenda Topic 3

111th Avenue & Grand Avenue	2040 No Build LOS		2040 Build LOS	
	a.m.	p.m.	a.m.	p.m.
Eastbound	F	E	E	C
Westbound	C	F	C	E
Northbound	C	D	D	D
Southbound	D	E	D	E
Overall	**F**	**F**	**D**	**D**

Note: Results use Synchro's built-in methodology to determine LOS.

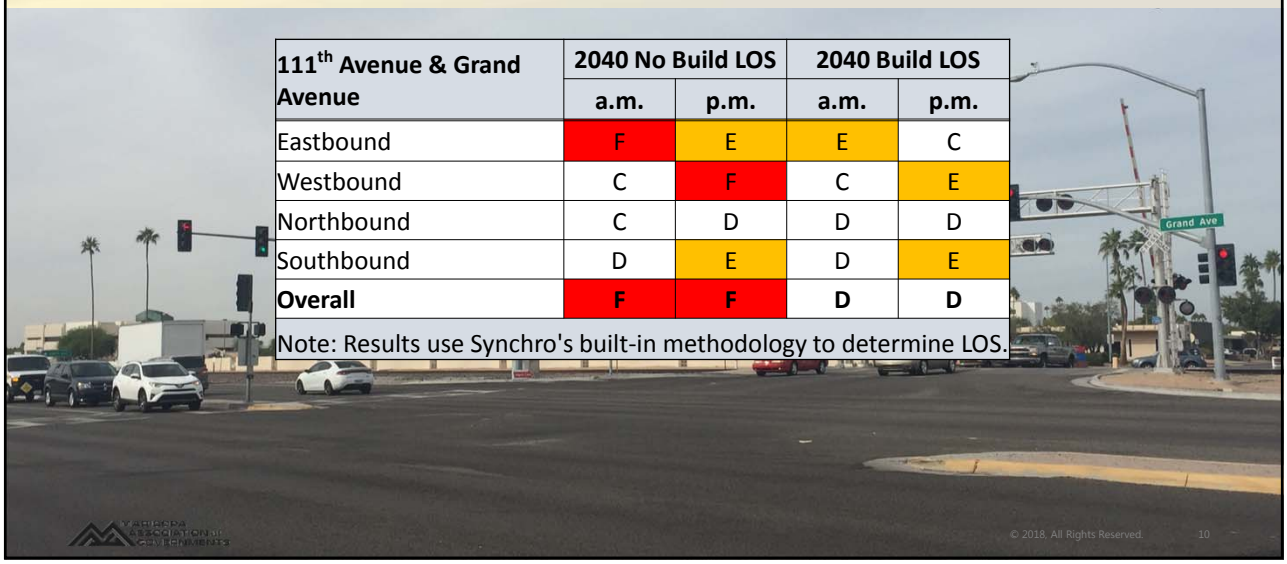

© 2018, All Rights Reserved.

Agenda Topic 3

111th Avenue Draft Recommended Improvements

- East Approach (US-60/Grand Avenue)
  - Add second left-turn lane
- North Approach (111th Avenue)
  - Add dedicated left-turn and right-turn lane and keep one through lane
- West Approach (US-60/Grand Avenue)
  - Add second left-turn lane
- South Approach (111th Avenue)
  - Add second left-turn lane and dedicated right-turn lane (Phase 2)

© 2018, All Rights Reserved. 11

Agenda Topic 3

107th Avenue & US-60/Grand Avenue

Alternate Emergency Route

© 2018, All Rights Reserved. 12

107th Avenue Intersection LOS

Agenda Topic 3

107th Avenue & Grand Avenue	2040 No Build LOS		2040 Build LOS	
	a.m.	p.m.	a.m.	p.m.
Eastbound	D	C	E	D
Westbound	C	E	C	E
Northbound	D	E	D	E
Southbound	D	E	D	E
Overall	**D**	**D**	**D**	**E**

Note: Results use Synchro's built-in methodology to determine LOS.

© 2018, All Rights Reserved. 13

103rd Avenue & US-60/Grand Avenue

Agenda Topic 3

© 2018, All Rights Reserved. 14

103rd Avenue Intersection LOS

Agenda Topic 3

103rd Avenue & Grand Avenue	2040 No Build LOS		2040 Build LOS	
	a.m.	p.m.	a.m.	p.m.
Eastbound	B	B	B	B
Westbound	B	D	B	E
Northbound	E	D	E	D
Southbound	D	E	D	E
Overall	**B**	**D**	**B**	**D**

Note: Results use Synchro's built-in methodology to determine LOS.

© 2018, All Rights Reserved. 15

99th Avenue & US-60/Grand Avenue Current Configuration

Agenda Topic 3

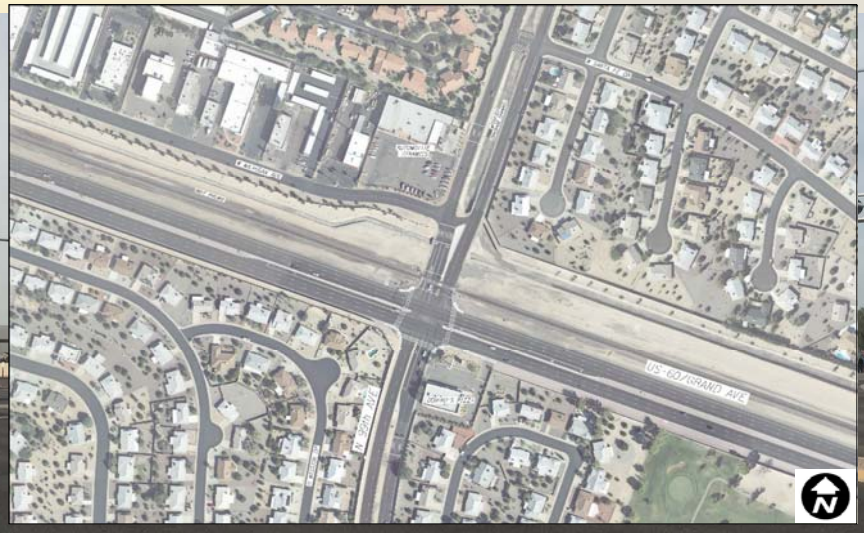

© 2018, All Rights Reserved. 16

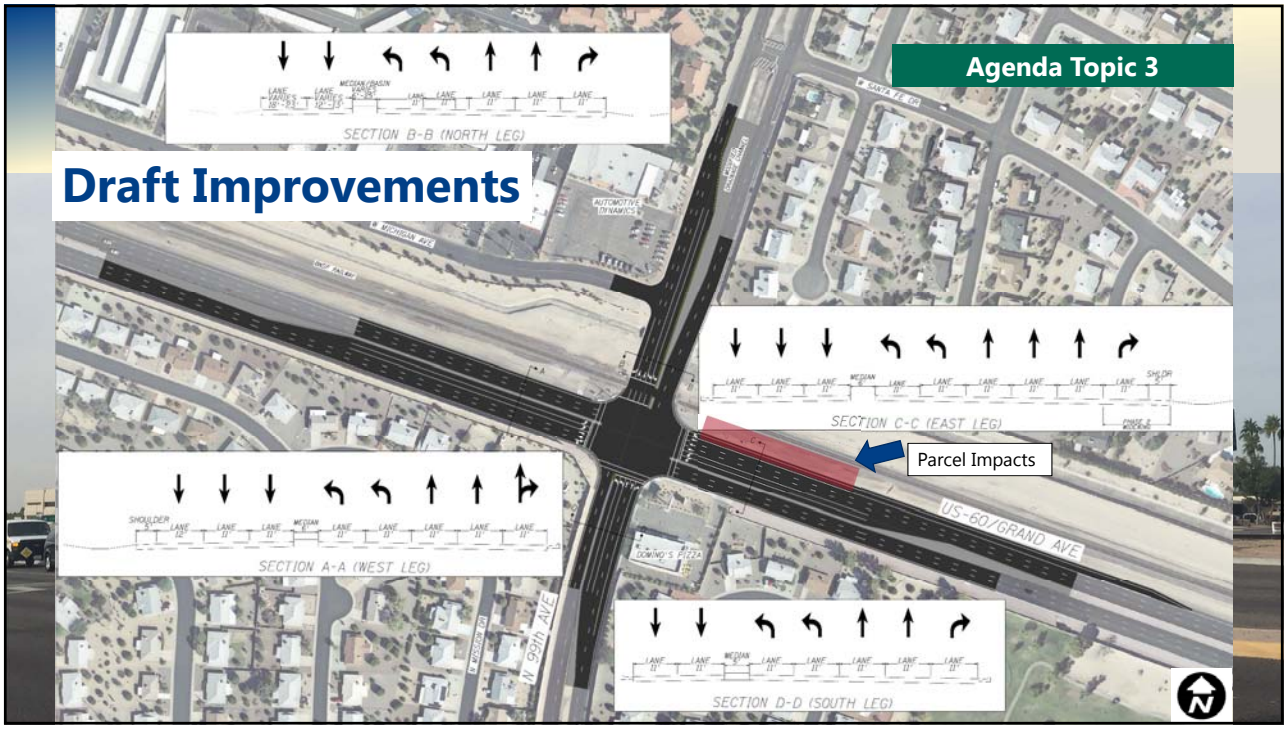

99th Avenue Intersection LOS

Agenda Topic 3

99th Avenue & Grand Avenue	2040 No Build LOS		2040 Build LOS	
	a.m.	p.m.	a.m.	p.m.
Eastbound	D	E	C	C
Westbound	F	F	D	D
Northbound	E	D	E	D
Southbound	F	F	D	D
Overall	**F**	**F**	**D**	**D**

Note: Results use Synchro's built-in methodology to determine LOS.

© 2018, All Rights Reserved.

Agenda Topic 3

99th Avenue Draft Recommended Improvements

- East Approach (US-60/Grand Avenue)
  - Add second left-turn lane
- North Approach (99th Avenue)
  - Add second left-turn lane
- West Approach (US-60/Grand Avenue)
  - Add second left-turn lane and dedicated right-turn lane with additional shoulder
- South Approach (99th Avenue)
  - Add second left turn lane

© 2018, All Rights Reserved. 19

Agenda Topic 3

MCDOT Project TP028
99th Avenue Corridor Improvement Study

- Conceptual Alternative Design Phase
- Promote bike and pedestrian connectivity
  - Include 5- to 8-foot sidewalks east and west of 99th Avenue on southside of Grand Avenue
  - Possible inclusion of bicycle lanes as roadway lane widths allow
- Reevaluate drainage channel conveyance for improvements
- Guardrail along drainage channel

© 2018, All Rights Reserved. 20

SR-101L SB & US-60/Grand Avenue

Agenda Topic 3

© 2018, All Rights Reserved.

SR-101L SB Intersection LOS

Agenda Topic 3

SR-101L SB & Grand Avenue	2040 No Build LOS		2040 Build LOS	
	a.m.	p.m.	a.m.	p.m.
Eastbound	A	A	A	A
Westbound	A	A	A	A
Overall	**A**	**A**	**A**	**A**

Note: Results use Synchro's built-in methodology to determine LOS.

© 2018, All Rights Reserved.

SR-101L NB & US-60/Grand Avenue

Agenda Topic 3

© 2018, All Rights Reserved. 23

SR-101L NB Intersection LOS

Agenda Topic 3

SR-101L NB & Grand Avenue	2040 No Build LOS		2040 Build LOS	
	a.m.	p.m.	a.m.	p.m.
Eastbound	C	B	C	B
Westbound	B	B	B	D
Northbound	C	C	C	C
Overall	**C**	**B**	**C**	**B**

Note: Results use Synchro's built-in methodology to determine LOS.

© 2018, All Rights Reserved. 24

91st Avenue & US-60/Grand Avenue Current Configuration

Agenda Topic 3

© 2018, All Rights Reserved. 25

91st Avenue Concept Evaluated

Agenda Topic 3

- Remove southbound exit ramp from SR-101L onto 91st Avenue
- Introduce Texas-U at Peoria Avenue for the southbound exiting traffic
  - Traffic is redirected to the US-60/SR-101L off-ramp

© 2018, All Rights Reserved. 26

Texas U-Turn

Agenda Topic 3

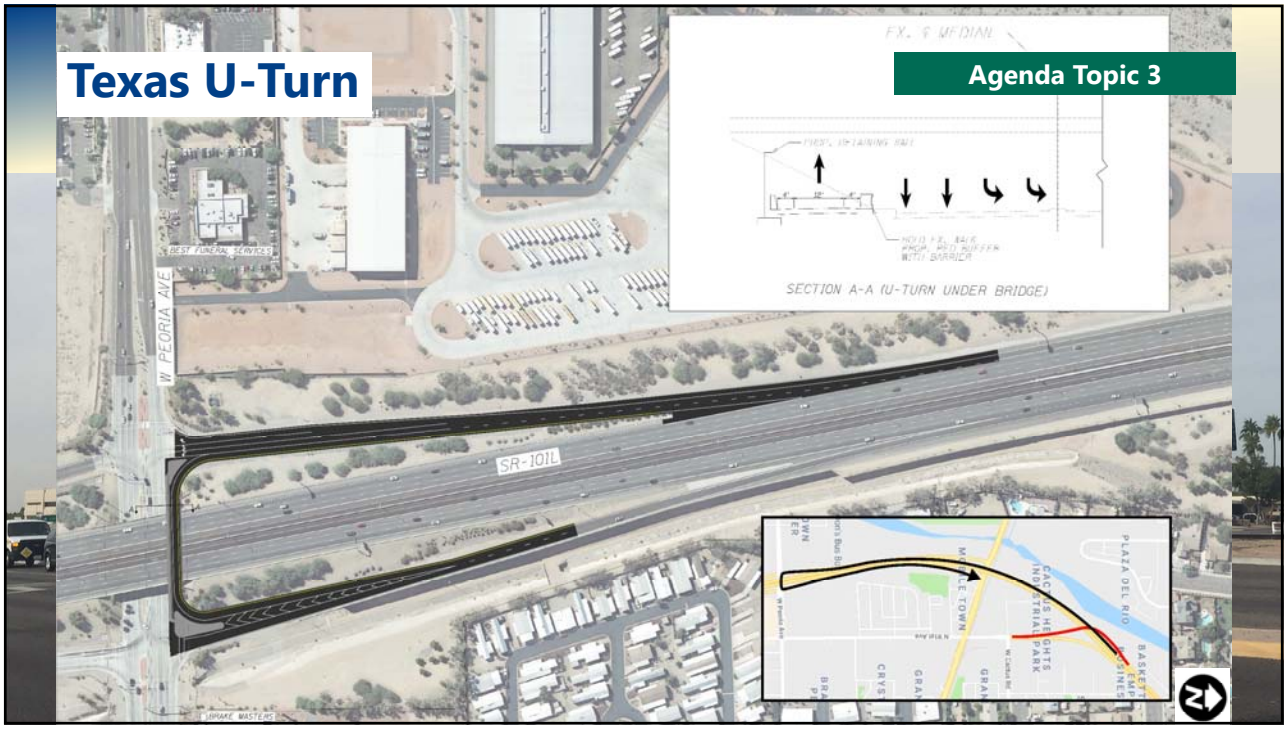

91st Avenue Intersection LOS

Agenda Topic 3

91st Avenue & Grand Avenue	2040 No Build LOS		2040 Build LOS	
	a.m.	p.m.	a.m.	p.m.
Eastbound	D	F	D	D
Westbound	D	F	D	E
Northbound	D	E	D	E
Southbound	D	F	C	D
Overall	**D**	**F**	**D**	**E**

Note: Results use Synchro's built-in methodology to determine LOS.

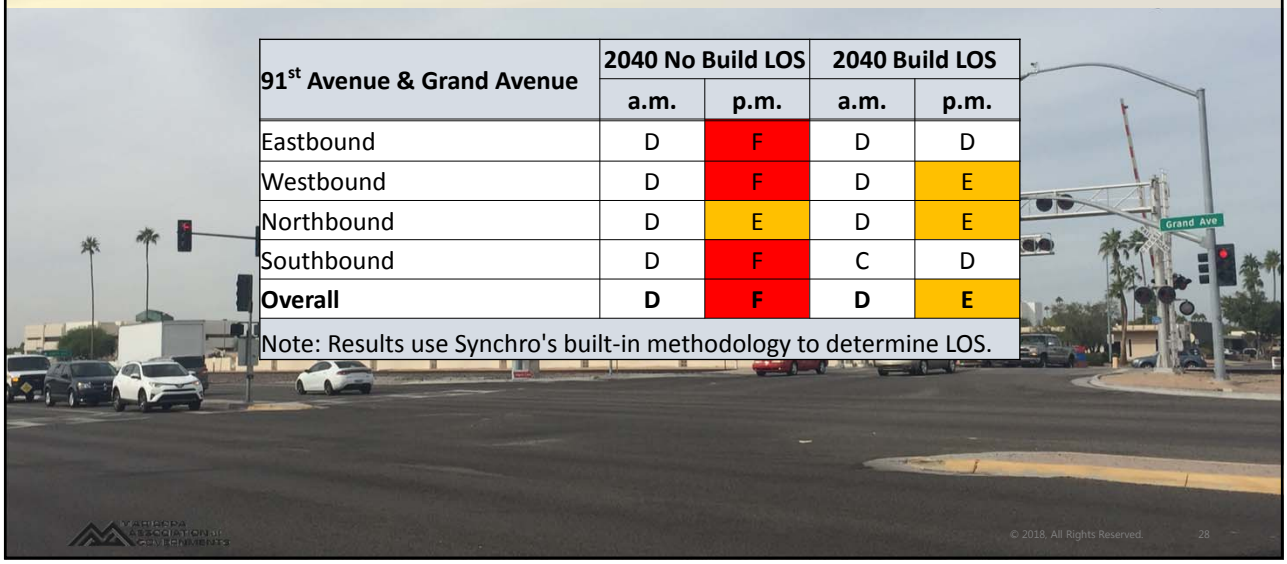

© 2018, All Rights Reserved.

91st Avenue & Cactus Road

Agenda Topic 3

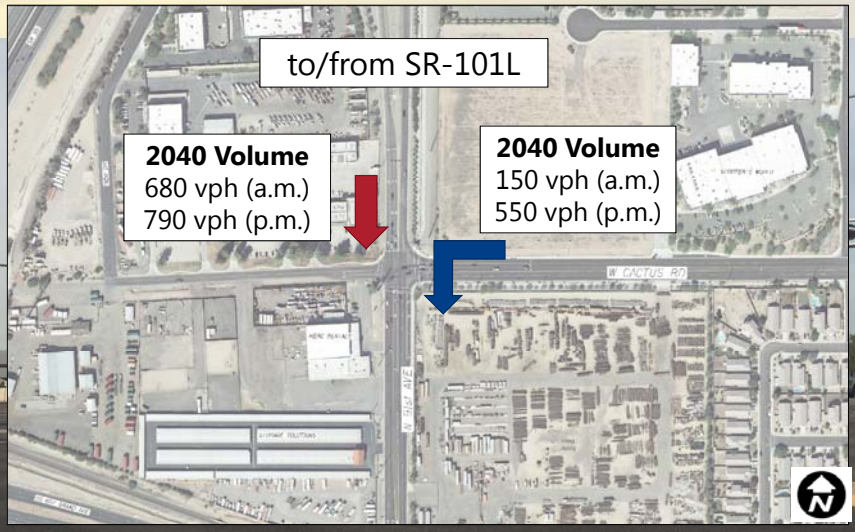

© 2018, All Rights Reserved.

91st Avenue and Cactus Road

Agenda Topic 3

91st Avenue & Cactus Road	2040 No Build LOS		2040 Build LOS	
	a.m.	p.m.	a.m.	p.m.
Eastbound	C	C	C	C
Westbound	D	E	D	D
Northbound	B	B	B	B
Southbound	C	D	C	D
Overall	**C**	**D**	**B**	**C**

Note: Results use Synchro's built-in methodology to determine LOS.

© 2018, All Rights Reserved.

Agenda Topic 3

Cost Estimate of Evaluated Concepts

Project	Estimated Project Costs	
	Phase 1	Phase 2
111th Avenue	$ 4,880,000.00	$ 257,000.00
99th Avenue	$ 8,377,000.00	
SB SR-101L	$ 500,000.00	
Texas-U	$ 7,308,000.00	

© 2018, All Rights Reserved.

Agenda Topic 3

Summary of Draft Recommendations

Location	Improvements
111th Avenue	• Add second left-turn lane to both directions of US-60/Grand Avenue • Add dedicated left- and right- turn lanes to north approach of 111th Avenue • Add second left-turn lane to south approach of 111th Avenue • Add dedicated right-turn lane to south leg of 111th Avenue ***(Phase 2)***
99th Avenue	• Add second left-turn lane to both directions of US-60/Grand Avenue • Add second left-turn lane to both directions of 99th Avenue • Add dedicated right-turn lane to west approach of US-60/Grand Avenue and widen shoulder
SB SR-101L	• Add dedicated right-lane on US-60/Grand Avenue
91st Avenue Corridor	• Continue with additional alternative development

© 2018, All Rights Reserved.

Next Steps

Agenda Topic 4

- Incorporate Planning Partner Input
- Complete and circulate report for comment

© 2018, All Rights Reserved. 33

US-60/Grand Avenue Sun City Implementation Study

Planning Partner Meeting
May 22, 2019

NOTES

US-60/Grand Avenue
Sun City Implementation Study

Thunderbird Road-Thompson Ranch Road to 91st Avenue

City of Peoria Focus Meeting
9875 N 85th Avenue, Peoria, AZ 85345
June 3, 2019

ATTENDEES
See attached sign-in sheet.

HANDOUTS
Study Area Plot.

Quinn Castro, MAG Project Manager, convened the meeting at 10:00 A.M.

The City of Peoria informed attendees of pedestrian bridge opportunities at 83rd Avenue and 87th Avenue.

Alternatives for the project were discussed. Peoria provided direction to further develop 4 alternatives for 91st Avenue: (1) a Texas-U, (2) a Thru-U, (3) roundabouts along 91st Avenue, and (4) an additional southbound left turn. Ms. Lund requested a video with an explanation of the Thru-U.

The Texas-U option has already been completed.

The Thru-U option, depicted in red in the study area plots, would involve loons provided along Grand east and west of 91st. Loons can be near side or far side and would require new signals. Potential lane usage is to be provided by Mr. Ambadipudi to Mr. Nissen, and lane size is to be determined by Mr. Nissen using truck templates. Linework is to include updates to the intersection of 91st Avenue and Grand in order to illustrate which lefts would be removed.

The roundabouts option along 91st Avenue, depicted in blue in the study area plots, would implement roundabouts at two intersections: (1) Cactus and 91st Avenue and (2) Cortez and 91st Avenue. Mr. Ambadipudi will provide lane usage and size to Mr. Nissen. Linework is to include updates to the intersection of 91st Avenue and Grand in order to illustrate which lefts would be removed.

Regarding the additional southbound left turn option, Mr. Ambadipudi will provide Mr. Nissen volume and storage length need.

As alternatives are developed, options 1 and 2 should be considered with the potential of implementing a Texas-U. Peoria requested the implementation of pedestrian paths at 91st Avenue in every alternative proposed. Combinations for analysis are not currently being considered.

Based on traffic studies before build and after build, traffic volumes will not increase significantly after build. Currently, traffic is almost at full buildout towards the east. These counts do not account for the growth in the MAG model.

Peoria requested a matrix accounting for the cost, right-of-way impacts, operations, times of failure, and resiliency to RR for each of the options to be implemented at 91st Avenue, including a no build option. Burgess & Niple shall complete this matrix.

Option	***Cost***	***ROW Impacts***	***Operations***	***Hours/Day when it fails***	***Resiliency to RR***
No build					
Texas-U					
Thru-U					
Roundabouts					
Turn Lane					

If the records are available, Peoria will provide historical counts data for the study.

US-60/Grand Avenue
Sun City Implementation Study

Thunderbird Road/Thompson Ranch Road to 91st Avenue

SIGN-IN SHEET

City of Peoria Focus Meeting
Monday, June 3, 2019
10:00 a.m.
9875 N 85th Avenue, Peoria, AZ 85345
City of Peoria

Present	Name	Agency
QQC	Quinn Castro	MAG
ACL	Adina Lund	City of Peoria
DN	Dan Nissen	City of Peoria
JP	Jason Pagnard	Burgess & Niple
DL	David Lenzer	Burgess & Niple
A	Ravi Ambadipudi	Burgess & Niple

APPENDIX B

Traffic Counts

TRAFFIC RESEARCH & ANALYSIS, INC.
Specializing in Traffic Data Collection

Traffic Research & Analysis, Inc.
3844 East Indian School Road
Phoenix, AZ 85018
(602) 840-1500

Intersection ID: 1801283
Count Date: 5/2/2018

N 91ST AVE & W CACTUS RD

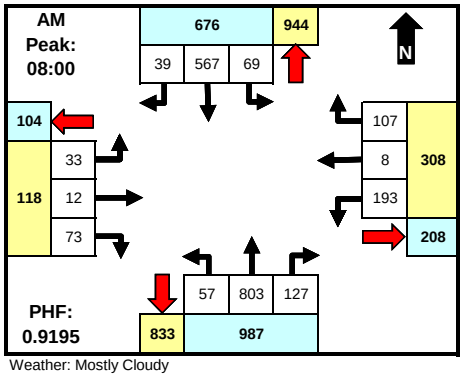

Weather: Mostly Cloudy

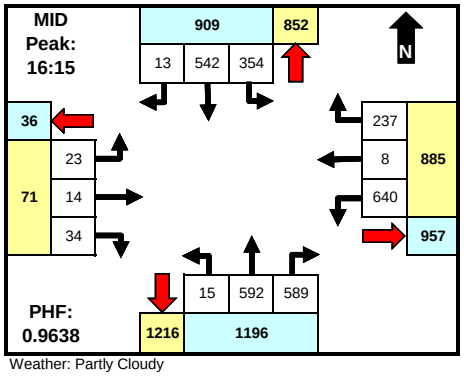

Weather: Partly Cloudy

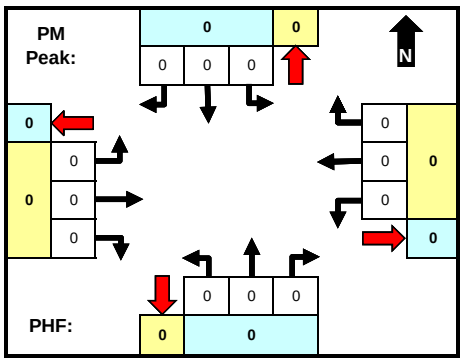

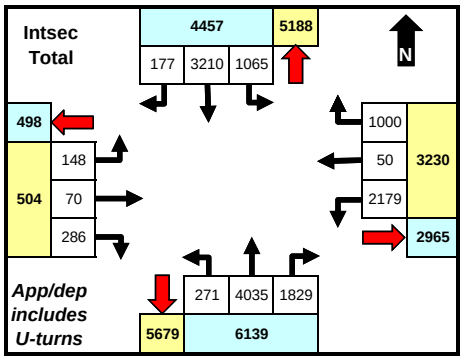

	North		East		South		West		
	App	Dep	App	Dep	App	Dep	App	Dep	Total
AM	676	944	308	208	987	833	118	104	**2089**
MID	909	852	885	957	1196	1216	71	36	**3061**
PM	0	0	0	0	0	0	0	0	**0**
Total	4457	5188	3230	2965	6139	5679	504	498	**14330**

	From North (SB)					From East (WB)					From South (NB)					From West (EB)					INTSEC
	N 91ST AVE					W CACTUS RD					N 91ST AVE					W CACTUS RD					
Time	LT	Thru	RT	U	Cwlk	LT	Thru	RT	U	Cwlk	LT	Thru	RT	U	Cwlk	LT	Thru	RT	U	Cwlk	TOTAL
0:00																					0
0:15																					0
0:30																					0
0:45																					0
1:00																					0
1:15																					0
1:30																					0
1:45																					0
2:00																					0
2:15																					0
2:30																					0
2:45																					0
3:00																					0
3:15																					0
3:30																					0
3:45																					0
4:00																					0
4:15																					0
4:30																					0
4:45																					0
5:00																					0
5:15																					0
5:30																					0
5:45																					0
6:00	13	77	6	0		25	1	26	0		11	110	51	0		2	2	4	0		328
6:15	2	123	5	0		30	0	13	0		11	166	16	0		3	2	5	0		376
6:30	0	131	15	0		24	3	19	1		19	198	0	0		6	2	14	0		432
6:45	2	130	31	1		21	4	10	0		25	199	1	0		8	1	5	0		438
7:00	1	128	16	1		14	1	15	0		17	170	4	1		8	0	6	0		382
7:15	0	140	9	0		14	0	21	0		14	163	0	2		9	0	6	0		378
7:30	0	188	7	0		33	1	25	0		14	254	1	0		9	0	9	0		541
7:45	0	177	17	0		17	1	22	0		28	207	0	0		10	0	27	0		506
8:00	0	160	13	0		21	0	13	0		19	292	1	0		14	0	35	0		568
8:15	1	152	14	0		17	0	17	0		16	217	2	0		7	0	23	0		466
8:30	24	132	8	1		60	6	34	0		12	176	57	0		6	6	4	0		526
8:45	44	123	4	0		95	2	43	0		10	118	67	0		6	6	11	0		529
9:00																					0
9:15																					0
9:30																					0
9:45																					0
10:00																					0
10:15																					0
10:30																					0
10:45																					0
11:00																					0
11:15																					0
11:30																					0
11:45																					0
12:00																					0
12:15																					0
12:30																					0
12:45																					0
13:00																					0
13:15																					0
13:30																					0
13:45																					0
14:00																					0
14:15																					0
14:30																					0
14:45																					0
15:00	57	131	6	0		121	4	64	0		12	150	118	0		7	4	17	0		691
15:15	63	135	3	0		150	4	56	0		11	121	123	0		2	3	9	0		680
15:30	77	126	5	2		121	3	73	0		17	158	138	0		8	9	17	0		754
15:45	74	124	1	0		133	8	57	0		7	150	133	0		5	6	18	0		716
16:00	97	138	1	0		125	2	58	0		6	104	111	0		11	4	25	0		682
16:15	87	156	8	0		148	4	49	0		5	164	149	0		9	6	9	0		794
16:30	75	142	2	0		168	2	64	0		5	140	148	0		5	2	10	0		763
16:45	91	123	1	0		159	1	58	0		4	152	141	0		3	5	9	0		747
17:00	101	121	2	0		165	1	66	0		1	136	151	0		6	1	6	0		757
17:15	92	138	1	0		152	2	72	0		3	150	161	1		2	5	8	0		787
17:30	92	106	1	0		201	0	68	0		3	162	112	0		1	5	5	0		756
17:45	72	109	1	0		165	0	57	0		1	178	144	0		1	1	4	0		733
18:00																					0
18:15																					0
18:30																					0
18:45																					0
19:00																					0
19:15																					0
19:30																					0
19:45																					0
20:00																					0
20:15																					0
20:30																					0
20:45																					0
21:00																					0
21:15																					0
21:30																					0
21:45																					0
22:00																					0
22:15																					0
22:30																					0
22:45																					0
Total																					

TRAFFIC RESEARCH & ANALYSIS, INC.
Specializing in Traffic Data Collection

Traffic Research & Analysis, Inc.
3844 East Indian School Road
Phoenix, AZ 85018
(602) 840-1500

Intersection ID: 1801283
Count Date: 5/2/2018

N 91ST AVE & W CACTUS RD

	From North (SB)					From East (WB)					From South (NB)					From West (EB)					INTSEC
	N 91ST AVE					W CACTUS RD					N 91ST AVE					W CACTUS RD					
23:00																					0
23:15																					0
23:30																					0
23:45																					0
Total	1065	3210	177	5	0	2179	50	1000	1	0	271	4035	1829	4	0	148	70	286	0	0	14330
AM Peak Hr:																					8:00
Pk Vol	69	567	39	1	0	193	8	107	0	0	57	803	127	0	0	33	12	73	0	0	2089
PHF	0.392	0.886	0.696	0.250	n/a	0.508	0.333	0.622	n/a	n/a	0.750	0.688	0.474	n/a	n/a	0.589	0.500	0.521	n/a	n/a	0.919
MID Peak Hr:																					16:15
Pk Vol	354	542	13	0	0	640	8	237	0	0	15	592	589	0	0	23	14	34	0	0	3061
PHF	0.876	0.869	0.406	n/a	n/a	0.952	0.500	0.898	n/a	n/a	0.750	0.902	0.975	n/a	n/a	0.639	0.583	0.850	n/a	n/a	0.964
PM Peak Hr:																					
Pk Vol																					0
PHF																					

Comments

Unless shown otherwise, MID period defined as 10:00 AM - 2:00 PM. Peaks defined based on total intersection volume for all vehicle types. Chart totals do not include crosswalk data.

TRAFFIC RESEARCH & ANALYSIS, INC.
Specializing in Traffic Data Collection

Traffic Research & Analysis, Inc.
3844 East Indian School Road
Phoenix, AZ 85018
(602) 840-1500

Intersection ID: 1801283
Count Date: 5/2/2018

N 91ST AVE & W CACTUS RD

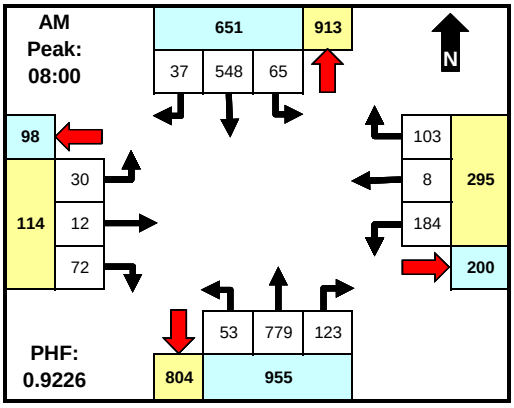

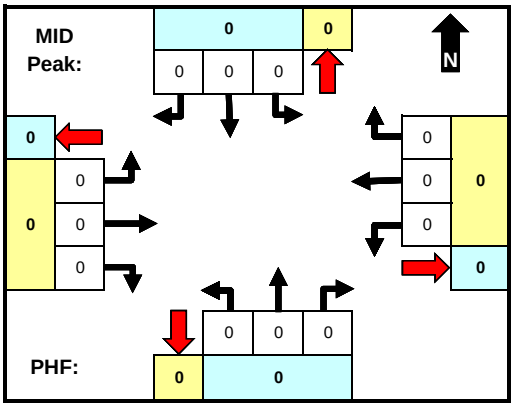

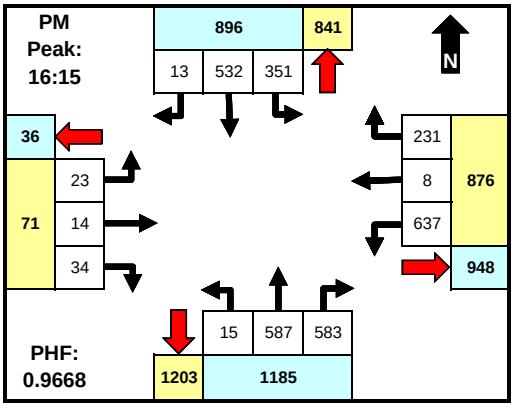

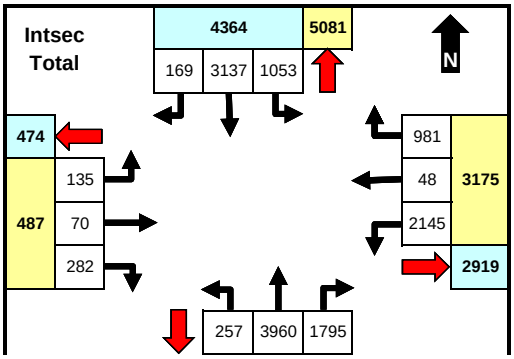

	From North (SB)				From East (WB)				From South (NB)				From West (EB)				INTSEC
	N 91ST AVE				W CACTUS RD				N 91ST AVE				W CACTUS RD				
Time	LT	Thru	RT	U	LT	Thru	RT	U	LT	Thru	RT	U	LT	Thru	RT	U	TOTAL
0:00																	0
0:15																	0
0:30																	0
0:45																	0
1:00																	0
1:15																	0
1:30																	0
1:45																	0
2:00																	0
2:15																	0
2:30																	0
2:45																	0
3:00																	0
3:15																	0
3:30																	0
3:45																	0
4:00																	0
4:15																	0
4:30																	0
4:45																	0
5:00																	0
5:15																	0
5:30																	0
5:45																	0
06:00	13	75	6	0	19	1	22	0	11	106	50	0	0	2	3	0	308
06:15	2	122	5	0	28	0	12	0	11	157	16	0	3	2	5	0	363
06:30	0	127	15	0	24	2	19	1	19	193	0	0	5	2	14	0	421
06:45	2	125	30	1	19	4	10	0	25	197	1	0	7	1	5	0	427
07:00	1	127	14	1	14	1	15	0	17	163	4	1	8	0	6	0	372
07:15	0	136	8	0	13	0	21	0	14	157	0	2	8	0	6	0	365
07:30	0	183	7	0	33	1	25	0	12	251	1	0	7	0	9	0	529
07:45	0	176	16	0	16	1	22	0	27	205	0	0	9	0	27	0	499
08:00	0	152	13	0	20	0	10	0	18	284	1	0	13	0	35	0	546
08:15	1	148	14	0	15	0	17	0	14	211	2	0	7	0	23	0	452
08:30	20	131	7	1	59	6	33	0	12	171	55	0	5	6	4	0	510
08:45	44	117	3	0	90	2	43	0	9	113	65	0	5	6	10	0	507
9:00																	0
9:15																	0
9:30																	0
9:45																	0
10:00																	0
10:15																	0
10:30																	0
10:45																	0
11:00																	0
11:15																	0
11:30																	0
11:45																	0
12:00																	0
12:15																	0
12:30																	0
12:45																	0
13:00																	0
13:15																	0
13:30																	0
13:45																	0
14:00																	0
14:15																	0
14:30																	0
14:45																	0
15:00	56	128	5	0	119	3	63	0	12	150	115	0	7	4	16	0	678
15:15	62	131	3	0	149	4	56	0	11	120	120	0	2	3	9	0	670
15:30	76	121	5	2	121	3	73	0	14	157	130	0	8	9	17	0	736
15:45	73	121	1	0	129	8	56	0	6	149	132	0	5	6	17	0	703
16:00	97	137	1	0	123	2	56	0	5	103	108	0	9	4	25	0	670
16:15	87	154	8	0	146	4	46	0	5	162	147	0	9	6	9	0	783
16:30	74	139	2	0	168	2	63	0	5	139	146	0	5	2	10	0	755
16:45	89	119	1	0	158	1	58	0	4	152	140	0	3	5	9	0	739
17:00	101	120	2	0	165	1	64	0	1	134	150	0	6	1	6	0	751
17:15	91	137	1	0	152	2	72	0	2	149	158	1	2	5	8	0	780
17:30	92	103	1	0	200	0	68	0	2	162	111	0	1	5	5	0	750
17:45	72	108	1	0	165	0	57	0	1	175	143	0	1	1	4	0	728
18:00																	0
18:15																	0
18:30																	0
18:45																	0
19:00																	0
19:15																	0
19:30																	0
19:45																	0
20:00																	0

TRAFFIC RESEARCH & ANALYSIS, INC.
Specializing in Traffic Data Collection

Traffic Research & Analysis, Inc.
3844 East Indian School Road
Phoenix, AZ 85018
(602) 840-1500

Intersection ID: 1801283
Count Date: 5/2/2018

N 91ST AVE & W CACTUS RD

	5568	6016	

	North		East		South		West		
	App	Dep	App	Dep	App	Dep	App	Dep	Total
AM	651	913	295	200	955	804	114	98	2015
MID	0	0	0	0	0	0	0	0	0
PM	896	841	876	948	1185	1203	71	36	3028
Total	4364	5081	3175	2919	6016	5568	487	474	14042

	From North (SB)				From East (WB)				From South (NB)				From West (EB)				INTSEC
	N 91ST AVE				W CACTUS RD				N 91ST AVE				W CACTUS RD				
20:15																	0
20:30																	0
20:45																	0
21:00																	0
21:15																	0
21:30																	0
21:45																	0
22:00																	0
22:15																	0
22:30																	0
22:45																	0
23:00																	0
23:15																	0
23:30																	0
23:45																	0
Total	1053	3137	169	5	2145	48	981	1	257	3960	1795	4	135	70	282	0	14042
AM Peak Hr:																	8:00
Pk Vol	65	548	37	1	184	8	103	0	53	779	123	0	30	12	72	0	2015
PHF	0.369	0.901	0.661	0.250	0.511	0.333	0.599	n/a	0.736	0.686	0.473	n/a	0.577	0.500	0.514	n/a	0.923
MID Peak Hr:																	
Pk Vol																	0
PHF																	
PM Peak Hr:																	16:15
Pk Vol	351	532	13	0	637	8	231	0	15	587	583	0	23	14	34	0	3028
PHF	0.869	0.864	0.406	n/a	0.948	0.500	0.902	n/a	0.750	0.906	0.972	n/a	0.639	0.583	0.850	n/a	0.967

Comments

Unless shown otherwise, MID period defined as 10:00 AM - 2:00 PM. Peaks defined based on total intersection volume for all vehicle types.

TRAFFIC RESEARCH & ANALYSIS, INC.
Specializing in Traffic Data Collection

Traffic Research & Analysis, Inc.
3844 East Indian School Road
Phoenix, AZ 85018
(602) 840-1500

Intersection ID: 1801283
Count Date: 5/2/2018

N 91ST AVE & W CACTUS RD

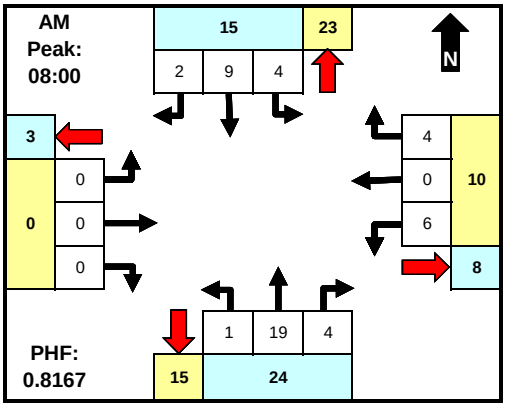

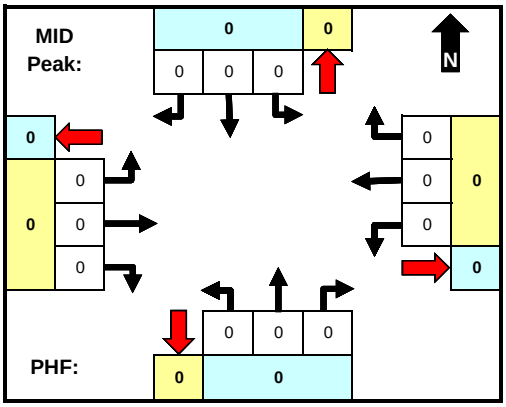

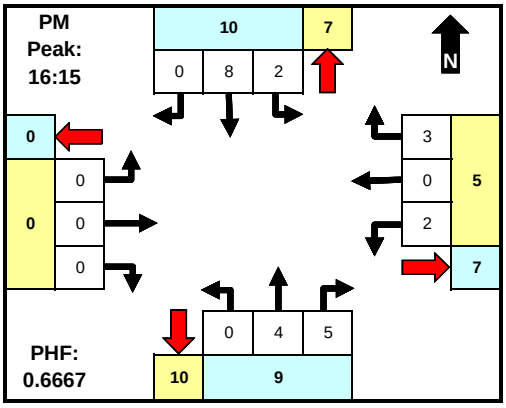

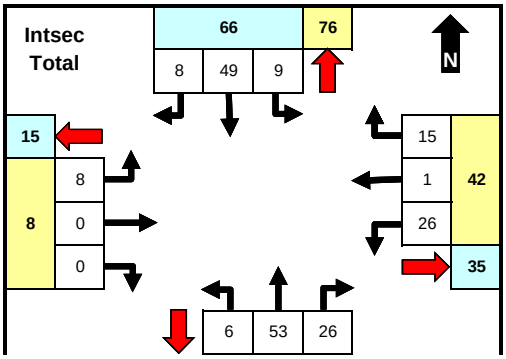

	From North (SB)				From East (WB)				From South (NB)				From West (EB)				INTSEC
	N 91ST AVE				W CACTUS RD				N 91ST AVE				W CACTUS RD				
Time	LT	Thru	RT	U	LT	Thru	RT	U	LT	Thru	RT	U	LT	Thru	RT	U	TOTAL
0:00																	0
0:15																	0
0:30																	0
0:45																	0
1:00																	0
1:15																	0
1:30																	0
1:45																	0
2:00																	0
2:15																	0
2:30																	0
2:45																	0
3:00																	0
3:15																	0
3:30																	0
3:45																	0
4:00																	0
4:15																	0
4:30																	0
4:45																	0
5:00																	0
5:15																	0
5:30																	0
5:45																	0
06:00	0	2	0	0	5	0	4	0	0	3	0	0	0	0	0	0	14
06:15	0	0	0	0	2	0	1	0	0	3	0	0	0	0	0	0	6
06:30	0	1	0	0	0	1	0	0	0	3	0	0	1	0	0	0	6
06:45	0	3	1	0	1	0	0	0	0	2	0	0	1	0	0	0	8
07:00	0	1	2	0	0	0	0	0	0	5	0	0	0	0	0	0	8
07:15	0	4	1	0	1	0	0	0	0	6	0	0	1	0	0	0	13
07:30	0	5	0	0	0	0	0	0	1	2	0	0	2	0	0	0	10
07:45	0	1	1	0	1	0	0	0	1	1	0	0	1	0	0	0	6
08:00	0	2	0	0	0	0	3	0	1	7	0	0	0	0	0	0	13
08:15	0	2	0	0	1	0	0	0	0	4	0	0	0	0	0	0	7
08:30	4	1	1	0	1	0	1	0	0	4	2	0	0	0	0	0	14
08:45	0	4	1	0	4	0	0	0	0	4	2	0	0	0	0	0	15
9:00																	0
9:15																	0
9:30																	0
9:45																	0
10:00																	0
10:15																	0
10:30																	0
10:45																	0
11:00																	0
11:15																	0
11:30																	0
11:45																	0
12:00																	0
12:15																	0
12:30																	0
12:45																	0
13:00																	0
13:15																	0
13:30																	0
13:45																	0
14:00																	0
14:15																	0
14:30																	0
14:45																	0
15:00	0	1	1	0	1	0	0	0	0	0	3	0	0	0	0	0	6
15:15	1	4	0	0	1	0	0	0	0	1	2	0	0	0	0	0	9
15:30	0	3	0	0	0	0	0	0	1	1	7	0	0	0	0	0	12
15:45	1	2	0	0	4	0	1	0	1	1	1	0	0	0	0	0	11
16:00	0	0	0	0	1	0	2	0	1	1	1	0	2	0	0	0	8
16:15	0	2	0	0	1	0	2	0	0	2	2	0	0	0	0	0	9
16:30	1	2	0	0	0	0	0	0	0	1	2	0	0	0	0	0	6
16:45	1	4	0	0	1	0	0	0	0	0	0	0	0	0	0	0	6
17:00	0	0	0	0	0	0	1	0	0	1	1	0	0	0	0	0	3
17:15	1	1	0	0	0	0	0	0	0	1	2	0	0	0	0	0	5
17:30	0	3	0	0	1	0	0	0	0	0	1	0	0	0	0	0	5
17:45	0	1	0	0	0	0	0	0	0	0	0	0	0	0	0	0	1
18:00																	0
18:15																	0
18:30																	0
18:45																	0
19:00																	0
19:15																	0
19:30																	0
19:45																	0
20:00																	0

TRAFFIC RESEARCH & ANALYSIS, INC.
Specializing in Traffic Data Collection

Traffic Research & Analysis, Inc.
3844 East Indian School Road
Phoenix, AZ 85018
(602) 840-1500

Intersection ID: 1801283
Count Date: 5/2/2018

N 91ST AVE & W CACTUS RD

	75	85	

	North		East		South		West		
	App	Dep	App	Dep	App	Dep	App	Dep	Total
AM	15	23	10	8	24	15	0	3	49
MID	0	0	0	0	0	0	0	0	0
PM	10	7	5	7	9	10	0	0	24
Total	66	76	42	35	85	75	8	15	201

	From North (SB)				From East (WB)				From South (NB)				From West (EB)				INTSEC
	N 91ST AVE				W CACTUS RD				N 91ST AVE				W CACTUS RD				
20:15																	0
20:30																	0
20:45																	0
21:00																	0
21:15																	0
21:30																	0
21:45																	0
22:00																	0
22:15																	0
22:30																	0
22:45																	0
23:00																	0
23:15																	0
23:30																	0
23:45																	0
Total	9	49	8	0	26	1	15	0	6	53	26	0	8	0	0	0	201
AM Peak Hr:																	8:00
Pk Vol	4	9	2	0	6	0	4	0	1	19	4	0	0	0	0	0	49
PHF	0.250	0.563	0.500	n/a	0.375	n/a	0.333	n/a	0.250	0.679	0.500	n/a	n/a	n/a	n/a	n/a	0.817
MID Peak Hr:																	
Pk Vol																	0
PHF																	
PM Peak Hr:																	16:15
Pk Vol	2	8	0	0	2	0	3	0	0	4	5	0	0	0	0	0	24
PHF	0.500	0.500	n/a	n/a	0.500	n/a	0.375	n/a	n/a	0.500	0.625	n/a	n/a	n/a	n/a	n/a	0.667

Comments

Unless shown otherwise, MID period defined as 10:00 AM - 2:00 PM. Peaks defined based on total intersection volume for all vehicle types.

TRAFFIC RESEARCH & ANALYSIS, INC.
Specializing in Traffic Data Collection

Traffic Research & Analysis, Inc.
3844 East Indian School Road
Phoenix, AZ 85018
(602) 840-1500

Intersection ID: 1801283
Count Date: 5/2/2018

N 91ST AVE & W CACTUS RD

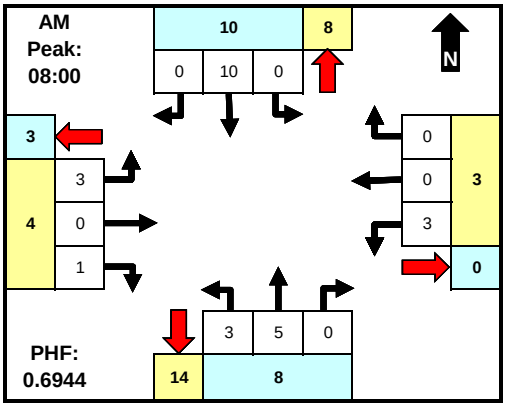

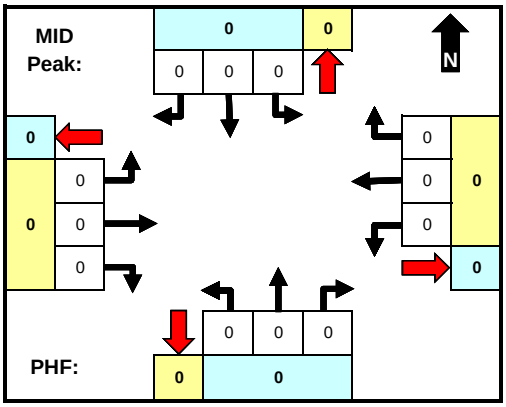

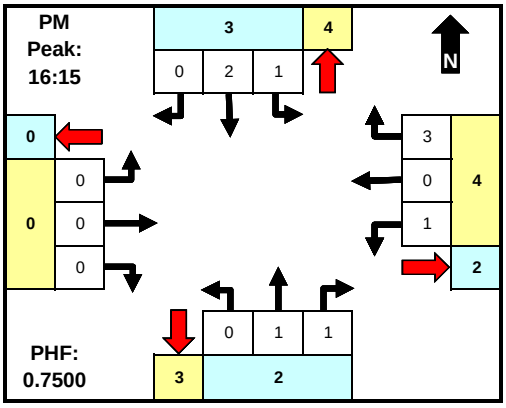

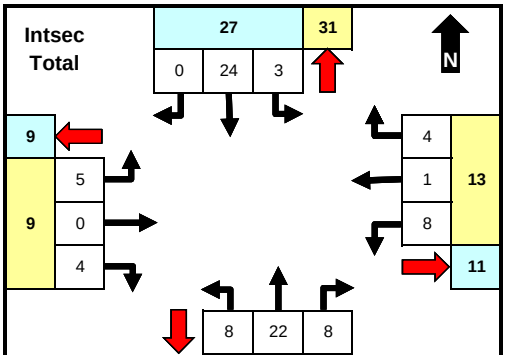

	From North (SB)				From East (WB)				From South (NB)				From West (EB)				INTSEC
	N 91ST AVE				W CACTUS RD				N 91ST AVE				W CACTUS RD				
Time	LT	Thru	RT	U	LT	Thru	RT	U	LT	Thru	RT	U	LT	Thru	RT	U	TOTAL
0:00																	0
0:15																	0
0:30																	0
0:45																	0
1:00																	0
1:15																	0
1:30																	0
1:45																	0
2:00																	0
2:15																	0
2:30																	0
2:45																	0
3:00																	0
3:15																	0
3:30																	0
3:45																	0
4:00																	0
4:15																	0
4:30																	0
4:45																	0
5:00																	0
5:15																	0
5:30																	0
5:45																	0
06:00	0	0	0	0	1	0	0	0	0	1	1	0	2	0	1	0	6
06:15	0	1	0	0	0	0	0	0	0	6	0	0	0	0	0	0	7
06:30	0	3	0	0	0	0	0	0	0	2	0	0	0	0	0	0	5
06:45	0	2	0	0	1	0	0	0	0	0	0	0	0	0	0	0	3
07:00	0	0	0	0	0	0	0	0	0	2	0	0	0	0	0	0	2
07:15	0	0	0	0	0	0	0	0	0	0	0	0	0	0	0	0	0
07:30	0	0	0	0	0	0	0	0	1	1	0	0	0	0	0	0	2
07:45	0	0	0	0	0	0	0	0	0	1	0	0	0	0	0	0	1
08:00	0	6	0	0	1	0	0	0	0	1	0	0	1	0	0	0	9
08:15	0	2	0	0	1	0	0	0	2	2	0	0	0	0	0	0	7
08:30	0	0	0	0	0	0	0	0	0	1	0	0	1	0	0	0	2
08:45	0	2	0	0	1	0	0	0	1	1	0	0	1	0	1	0	7
9:00																	0
9:15																	0
9:30																	0
9:45																	0
10:00																	0
10:15																	0
10:30																	0
10:45																	0
11:00																	0
11:15																	0
11:30																	0
11:45																	0
12:00																	0
12:15																	0
12:30																	0
12:45																	0
13:00																	0
13:15																	0
13:30																	0
13:45																	0
14:00																	0
14:15																	0
14:30																	0
14:45																	0
15:00	1	2	0	0	1	1	1	0	0	0	0	0	0	0	1	0	7
15:15	0	0	0	0	0	0	0	0	0	0	1	0	0	0	0	0	1
15:30	1	2	0	0	0	0	0	0	2	0	1	0	0	0	0	0	6
15:45	0	1	0	0	0	0	0	0	0	0	0	0	0	0	1	0	2
16:00	0	1	0	0	1	0	0	0	0	0	2	0	0	0	0	0	4
16:15	0	0	0	0	1	0	1	0	0	0	0	0	0	0	0	0	2
16:30	0	1	0	0	0	0	1	0	0	0	0	0	0	0	0	0	2
16:45	1	0	0	0	0	0	0	0	0	0	1	0	0	0	0	0	2
17:00	0	1	0	0	0	0	1	0	0	1	0	0	0	0	0	0	3
17:15	0	0	0	0	0	0	0	0	1	0	1	0	0	0	0	0	2
17:30	0	0	0	0	0	0	0	0	1	0	0	0	0	0	0	0	1
17:45	0	0	0	0	0	0	0	0	0	3	1	0	0	0	0	0	4
18:00																	0
18:15																	0
18:30																	0
18:45																	0
19:00																	0
19:15																	0
19:30																	0
19:45																	0
20:00																	0

TRAFFIC RESEARCH & ANALYSIS, INC.
Specializing in Traffic Data Collection

Traffic Research & Analysis, Inc.
3844 East Indian School Road
Phoenix, AZ 85018
(602) 840-1500

Intersection ID: 1801283
Count Date: 5/2/2018

N 91ST AVE & W CACTUS RD

	36	38	

	North		East		South		West		
	App	Dep	App	Dep	App	Dep	App	Dep	Total
AM	10	8	3	0	8	14	4	3	25
MID	0	0	0	0	0	0	0	0	0
PM	3	4	4	2	2	3	0	0	9
Total	27	31	13	11	38	36	9	9	87

	From North (SB)				From East (WB)				From South (NB)				From West (EB)				INTSEC
	N 91ST AVE				W CACTUS RD				N 91ST AVE				W CACTUS RD				
20:15																	0
20:30																	0
20:45																	0
21:00																	0
21:15																	0
21:30																	0
21:45																	0
22:00																	0
22:15																	0
22:30																	0
22:45																	0
23:00																	0
23:15																	0
23:30																	0
23:45																	0
Total	3	24	0	0	8	1	4	0	8	22	8	0	5	0	4	0	87
AM Peak Hr:																	8:00
Pk Vol	0	10	0	0	3	0	0	0	3	5	0	0	3	0	1	0	25
PHF	n/a	0.417	n/a	n/a	0.750	n/a	n/a	n/a	0.375	0.625	n/a	n/a	0.750	n/a	0.250	n/a	0.694
MID Peak Hr:																	
Pk Vol																	0
PHF																	
PM Peak Hr:																	16:15
Pk Vol	1	2	0	0	1	0	3	0	0	1	1	0	0	0	0	0	9
PHF	0.250	0.500	n/a	n/a	0.250	n/a	0.750	n/a	n/a	0.250	0.250	n/a	n/a	n/a	n/a	n/a	0.750

Comments

Unless shown otherwise, MID period defined as 10:00 AM - 2:00 PM. Peaks defined based on total intersection volume for all vehicle types.

TRAFFIC RESEARCH & ANALYSIS, INC.
Specializing in Traffic Data Collection

Traffic Research & Analysis, Inc.
3844 East Indian School Road
Phoenix, AZ 85018
(602) 840-1500

Intersection ID: 1801284
Count Date: 5/2/2018

N 91ST AVE & W GRAND AVE

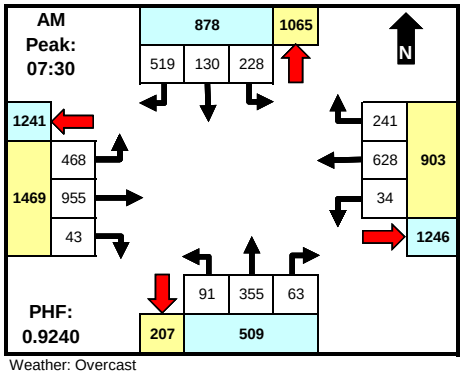

Weather: Overcast

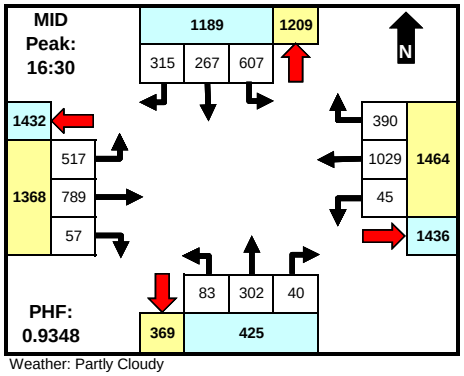

Weather: Partly Cloudy

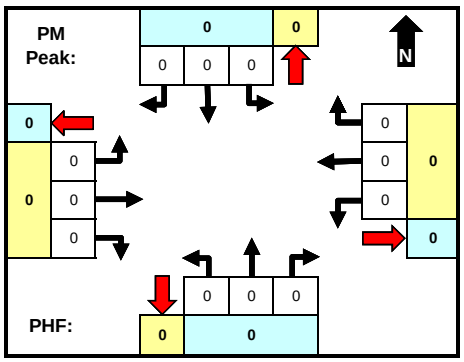

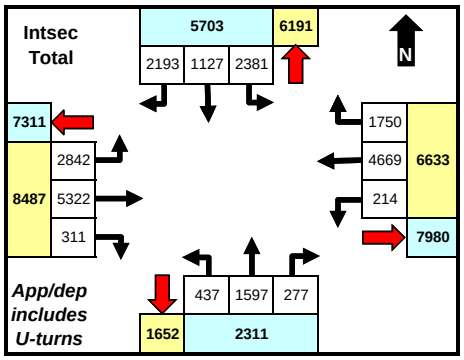

	North		East		South		West		
	App	Dep	App	Dep	App	Dep	App	Dep	Total
AM	878	1065	903	1246	509	207	1469	1241	3759
MID	1189	1209	1464	1436	425	369	1368	1432	4446
PM	0	0	0	0	0	0	0	0	0
Total	5703	6191	6633	7980	2311	1652	8487	7311	23134

	From North (SB)					From East (WB)					From South (NB)					From West (EB)					INTSEC
	N 91ST AVE					W GRAND AVE					N 91ST AVE					W GRAND AVE					
Time	LT	Thru	RT	U	Cwlk	LT	Thru	RT	U	Cwlk	LT	Thru	RT	U	Cwlk	LT	Thru	RT	U	Cwlk	TOTAL
0:00																					0
0:15																					0
0:30																					0
0:45																					0
1:00																					0
1:15																					0
1:30																					0
1:45																					0
2:00																					0
2:15																					0
2:30																					0
2:45																					0
3:00																					0
3:15																					0
3:30																					0
3:45																					0
4:00																					0
4:15																					0
4:30																					0
4:45																					0
5:00																					0
5:15																					0
5:30																					0
5:45																					0
6:00	19	11	57	0		2	119	40	0		9	23	11	0		91	238	2	0		622
6:15	32	13	114	0		3	129	46	0		8	34	8	0		107	358	4	1		857
6:30	42	17	113	0		7	133	54	0		9	55	10	0		134	277	3	0		854
6:45	37	17	96	0		9	169	62	0		12	37	14	0		109	362	9	0		933
7:00	37	20	88	0		1	140	54	0		18	45	4	0		89	264	7	0		767
7:15	29	19	113	0		9	130	61	0		15	48	15	0		82	292	5	0		818
7:30	70	27	130	0		8	186	75	0		27	72	16	0		153	242	11	0		1017
7:45	60	32	133	0		9	174	51	0		21	91	18	0		92	284	14	1		980
8:00	50	37	133	1		12	137	63	0		23	94	11	0		122	217	8	0		908
8:15	48	34	123	0		5	131	52	0		20	98	18	0		101	212	10	2		854
8:30	80	29	86	0		12	160	56	0		23	42	14	0		143	253	16	1		915
8:45	97	48	80	0		7	150	66	0		12	32	9	0		97	166	9	0		773
9:00																					0
9:15																					0
9:30																					0
9:45																					0
10:00																					0
10:15																					0
10:30																					0
10:45																					0
11:00																					0
11:15																					0
11:30																					0
11:45																					0
12:00																					0
12:15																					0
12:30																					0
12:45																					0
13:00																					0
13:15																					0
13:30																					0
13:45																					0
14:00																					0
14:15																					0
14:30																					0
14:45																					0
15:00	138	71	89	0		9	184	66	0		16	84	15	0		138	191	14	0		1015
15:15	148	55	68	0		9	237	70	0		22	66	12	0		133	151	26	0		997
15:30	129	61	79	0		14	260	76	0		18	89	13	0		132	183	18	0		1072
15:45	121	66	91	0		13	213	92	0		25	67	10	0		127	154	18	0		997
16:00	134	65	86	0		12	251	69	0		19	75	9	0		84	179	28	1		1012
16:15	171	86	70	0		10	241	91	0		25	86	8	0		148	216	26	0		1178
16:30	156	63	87	0		11	299	109	0		26	69	11	0		120	168	20	1		1140
16:45	161	75	75	0		8	223	83	0		15	86	10	0		124	198	12	0		1070
17:00	151	64	78	0		12	213	85	0		25	76	10	0		139	183	10	1		1047
17:15	139	65	75	0		14	294	113	0		17	71	9	0		134	240	15	3		1189
17:30	182	86	64	1		10	244	104	0		19	78	7	0		94	143	10	1		1043
17:45	150	66	65	0		8	252	112	0		13	79	15	0		149	151	16	0		1076
18:00																					0
18:15																					0
18:30																					0
18:45																					0
19:00																					0
19:15																					0
19:30																					0
19:45																					0
20:00																					0
20:15																					0
20:30																					0
20:45																					0
21:00																					0
21:15																					0
21:30																					0
21:45																					0
22:00																					0
22:15																					0
22:30																					0
22:45																					0
Total																					

TRAFFIC RESEARCH & ANALYSIS, INC.
Specializing in Traffic Data Collection

Traffic Research & Analysis, Inc.
3844 East Indian School Road
Phoenix, AZ 85018
(602) 840-1500

Intersection ID: 1801284
Count Date: 5/2/2018

N 91ST AVE & W GRAND AVE

	From North (SB)					From East (WB)					From South (NB)					From West (EB)					INTSEC
	N 91ST AVE					W GRAND AVE					N 91ST AVE					W GRAND AVE					
23:00																					0
23:15																					0
23:30																					0
23:45																					0
Total	2381	1127	2193	2	0	214	4669	1750	0	0	437	1597	277	0	0	2842	5322	311	12	0	23134
AM Peak Hr:																					7:30
Pk Vol	228	130	519	1	0	34	628	241	0	0	91	355	63	0	0	468	955	43	3	0	3759
PHF	0.814	0.878	0.976	0.250	n/a	0.708	0.844	0.803	n/a	n/a	0.843	0.906	0.875	n/a	n/a	0.765	0.841	0.768	0.375	n/a	0.924
MID Peak Hr:																					16:30
Pk Vol	607	267	315	0	0	45	1029	390	0	0	83	302	40	0	0	517	789	57	5	0	4446
PHF	0.943	0.890	0.905	n/a	n/a	0.804	0.860	0.863	n/a	n/a	0.798	0.878	0.909	n/a	n/a	0.930	0.822	0.713	0.417	n/a	0.935
PM Peak Hr:																					
Pk Vol																					0
PHF																					

Comments

Unless shown otherwise, MID period defined as 10:00 AM - 2:00 PM. Peaks defined based on total intersection volume for all vehicle types. Chart totals do not include crosswalk data.

TRAFFIC RESEARCH & ANALYSIS, INC.
Specializing in Traffic Data Collection

Traffic Research & Analysis, Inc.
3844 East Indian School Road
Phoenix, AZ 85018
(602) 840-1500

Intersection ID: 1801284
Count Date: 5/2/2018

N 91ST AVE & W GRAND AVE

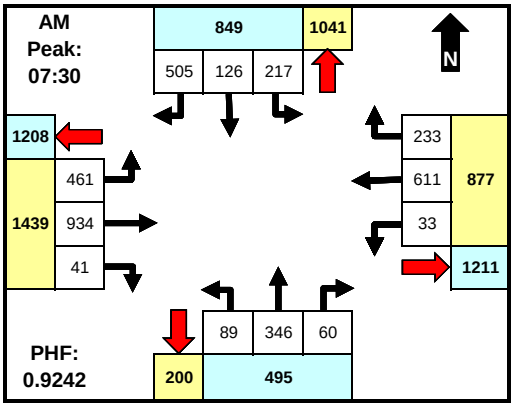

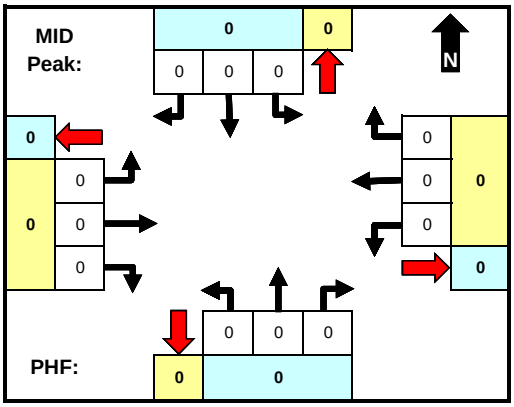

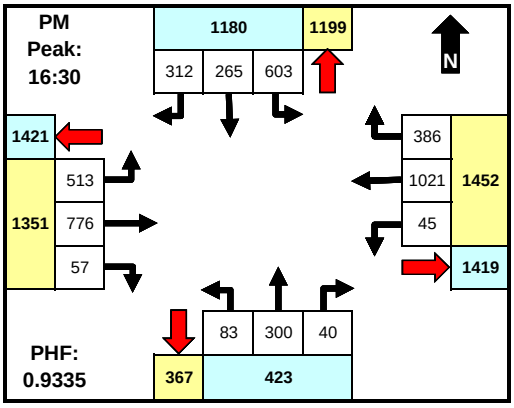

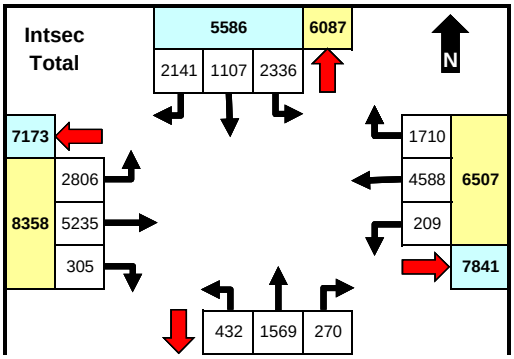

	From North (SB)				From East (WB)				From South (NB)				From West (EB)				INTSEC
	N 91ST AVE				W GRAND AVE				N 91ST AVE				W GRAND AVE				
Time	LT	Thru	RT	U	LT	Thru	RT	U	LT	Thru	RT	U	LT	Thru	RT	U	TOTAL
0:00																	0
0:15																	0
0:30																	0
0:45																	0
1:00																	0
1:15																	0
1:30																	0
1:45																	0
2:00																	0
2:15																	0
2:30																	0
2:45																	0
3:00																	0
3:15																	0
3:30																	0
3:45																	0
4:00																	0
4:15																	0
4:30																	0
4:45																	0
5:00																	0
5:15																	0
5:30																	0
5:45																	0
06:00	18	11	52	0	2	115	36	0	9	22	11	0	90	234	2	0	602
06:15	31	13	113	0	3	123	43	0	8	34	8	0	105	351	4	1	837
06:30	39	17	111	0	7	128	52	0	9	54	10	0	133	273	3	0	836
06:45	34	17	94	0	8	164	62	0	12	37	14	0	108	361	9	0	920
07:00	36	18	87	0	1	137	51	0	18	45	4	0	89	262	7	0	755
07:15	28	19	110	0	9	125	58	0	15	45	14	0	81	292	5	0	801
07:30	68	25	128	0	8	181	74	0	25	72	14	0	149	236	10	0	990
07:45	57	32	127	0	9	172	50	0	21	88	17	0	92	281	13	1	960
08:00	48	35	131	1	11	132	60	0	23	92	11	0	121	214	8	0	887
08:15	44	34	119	0	5	126	49	0	20	94	18	0	99	203	10	2	823
08:30	79	29	86	0	12	157	55	0	22	39	14	0	142	248	16	1	900
08:45	94	42	76	0	7	144	62	0	12	31	9	0	96	163	9	0	745
9:00																	0
9:15																	0
9:30																	0
9:45																	0
10:00																	0
10:15																	0
10:30																	0
10:45																	0
11:00																	0
11:15																	0
11:30																	0
11:45																	0
12:00																	0
12:15																	0
12:30																	0
12:45																	0
13:00																	0
13:15																	0
13:30																	0
13:45																	0
14:00																	0
14:15																	0
14:30																	0
14:45																	0
15:00	136	71	83	0	9	182	66	0	16	83	15	0	137	184	12	0	994
15:15	146	53	66	0	9	233	70	0	22	65	11	0	130	147	25	0	977
15:30	127	61	76	0	14	259	74	0	18	85	13	0	126	180	18	0	1051
15:45	121	62	88	0	13	209	91	0	24	67	9	0	125	150	18	0	977
16:00	131	65	84	0	10	249	68	0	18	74	8	0	81	177	28	1	994
16:15	170	86	69	0	10	240	89	0	25	85	8	0	147	212	25	0	1166
16:30	155	61	86	0	11	298	108	0	26	68	11	0	119	166	20	1	1130
16:45	159	75	74	0	8	222	82	0	15	86	10	0	124	195	12	0	1062
17:00	150	64	77	0	12	210	84	0	25	76	10	0	138	177	10	1	1034
17:15	139	65	75	0	14	291	112	0	17	70	9	0	132	238	15	3	1180
17:30	177	86	64	1	10	241	104	0	19	78	7	0	94	142	10	1	1034
17:45	149	66	65	0	7	250	110	0	13	79	15	0	148	149	16	0	1067
18:00																	0
18:15																	0
18:30																	0
18:45																	0
19:00																	0
19:15																	0
19:30																	0
19:45																	0
20:00																	0

TRAFFIC RESEARCH & ANALYSIS, INC.
Specializing in Traffic Data Collection

Traffic Research & Analysis, Inc.
3844 East Indian School Road
Phoenix, AZ 85018
(602) 840-1500

Intersection ID: 1801284
Count Date: 5/2/2018

N 91ST AVE & W GRAND AVE

	1621	2271	

	North		East		South		West		
	App	Dep	App	Dep	App	Dep	App	Dep	Total
AM	849	1041	877	1211	495	200	1439	1208	3660
MID	0	0	0	0	0	0	0	0	0
PM	1180	1199	1452	1419	423	367	1351	1421	4406
Total	5586	6087	6507	7841	2271	1621	8358	7173	22722

	From North (SB)				From East (WB)				From South (NB)				From West (EB)				INTSEC
	N 91ST AVE				W GRAND AVE				N 91ST AVE				W GRAND AVE				
20:15																	0
20:30																	0
20:45																	0
21:00																	0
21:15																	0
21:30																	0
21:45																	0
22:00																	0
22:15																	0
22:30																	0
22:45																	0
23:00																	0
23:15																	0
23:30																	0
23:45																	0
Total	2336	1107	2141	2	209	4588	1710	0	432	1569	270	0	2806	5235	305	12	22722
AM Peak Hr:																	7:30
Pk Vol	217	126	505	1	33	611	233	0	89	346	60	0	461	934	41	3	3660
PHF	0.798	0.900	0.964	0.250	0.750	0.844	0.787	n/a	0.890	0.920	0.833	n/a	0.773	0.831	0.788	0.375	0.924
MID Peak Hr:																	
Pk Vol																	0
PHF																	
PM Peak Hr:																	16:30
Pk Vol	603	265	312	0	45	1021	386	0	83	300	40	0	513	776	57	5	4406
PHF	0.948	0.883	0.907	n/a	0.804	0.857	0.862	n/a	0.798	0.872	0.909	n/a	0.929	0.815	0.713	0.417	0.933

Comments

Unless shown otherwise, MID period defined as 10:00 AM - 2:00 PM. Peaks defined based on total intersection volume for all vehicle types.

TRAFFIC RESEARCH & ANALYSIS, INC.
Specializing in Traffic Data Collection

Traffic Research & Analysis, Inc.
3844 East Indian School Road
Phoenix, AZ 85018
(602) 840-1500

Intersection ID: 1801284
Count Date: 5/2/2018

N 91ST AVE & W GRAND AVE

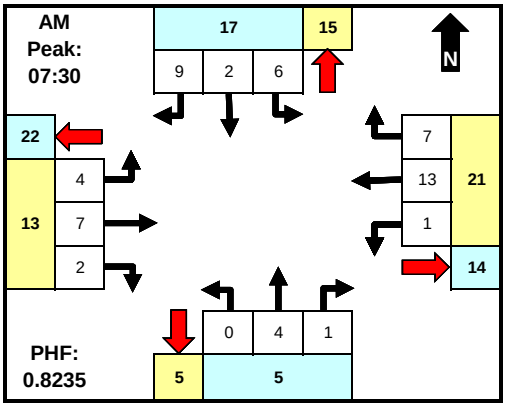

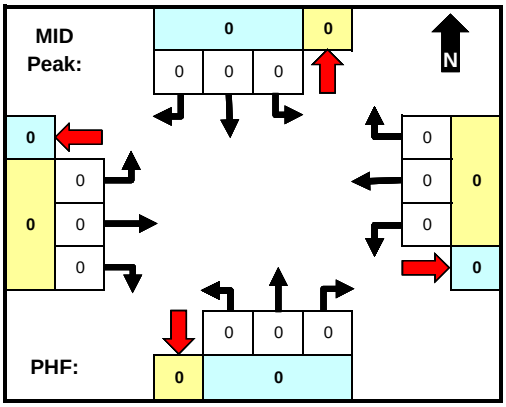

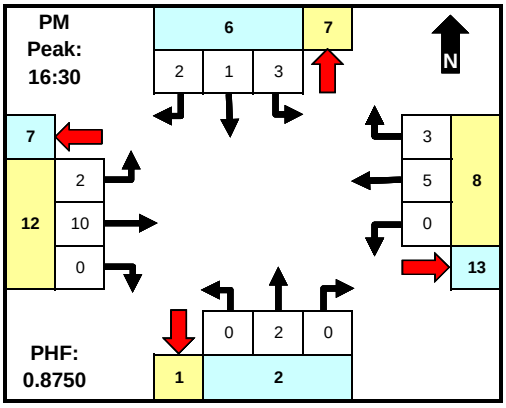

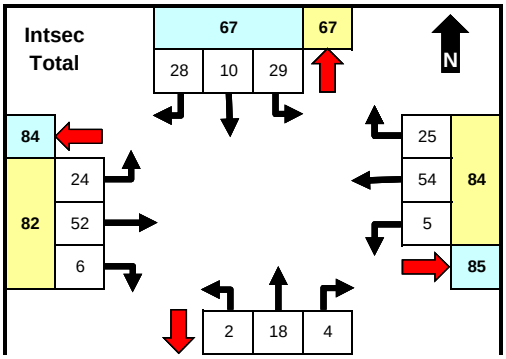

	From North (SB)				From East (WB)				From South (NB)				From West (EB)				INTSEC
	N 91ST AVE				W GRAND AVE				N 91ST AVE				W GRAND AVE				
Time	LT	Thru	RT	U	LT	Thru	RT	U	LT	Thru	RT	U	LT	Thru	RT	U	TOTAL
0:00																	0
0:15																	0
0:30																	0
0:45																	0
1:00																	0
1:15																	0
1:30																	0
1:45																	0
2:00																	0
2:15																	0
2:30																	0
2:45																	0
3:00																	0
3:15																	0
3:30																	0
3:45																	0
4:00																	0
4:15																	0
4:30																	0
4:45																	0
5:00																	0
5:15																	0
5:30																	0
5:45																	0
06:00	1	0	3	0	0	3	1	0	0	0	0	0	1	2	0	0	11
06:15	0	0	1	0	0	5	1	0	0	0	0	0	0	4	0	0	11
06:30	1	0	1	0	0	3	1	0	0	0	0	0	1	1	0	0	8
06:45	2	0	2	0	1	3	0	0	0	0	0	0	1	1	0	0	10
07:00	0	1	0	0	0	2	1	0	0	0	0	0	0	2	0	0	6
07:15	1	0	1	0	0	3	3	0	0	2	1	0	1	0	0	0	12
07:30	2	1	2	0	0	4	0	0	0	0	0	0	2	1	1	0	13
07:45	3	0	6	0	0	1	1	0	0	3	1	0	0	1	1	0	17
08:00	0	1	0	0	1	3	3	0	0	1	0	0	1	0	0	0	10
08:15	1	0	1	0	0	5	3	0	0	0	0	0	1	5	0	0	16
08:30	1	0	0	0	0	3	0	0	1	3	0	0	1	3	0	0	12
08:45	1	3	1	0	0	4	3	0	0	1	0	0	1	1	0	0	15
9:00																	0
9:15																	0
9:30																	0
9:45																	0
10:00																	0
10:15																	0
10:30																	0
10:45																	0
11:00																	0
11:15																	0
11:30																	0
11:45																	0
12:00																	0
12:15																	0
12:30																	0
12:45																	0
13:00																	0
13:15																	0
13:30																	0
13:45																	0
14:00																	0
14:15																	0
14:30																	0
14:45																	0
15:00	2	0	3	0	0	0	0	0	0	1	0	0	1	5	2	0	14
15:15	1	1	2	0	0	3	0	0	0	1	1	0	2	4	1	0	16
15:30	2	0	1	0	0	0	1	0	0	3	0	0	4	3	0	0	14
15:45	0	2	1	0	0	1	1	0	1	0	1	0	1	3	0	0	11
16:00	1	0	1	0	2	1	1	0	0	0	0	0	2	1	0	0	9
16:15	1	0	0	0	0	1	2	0	0	1	0	0	1	3	1	0	10
16:30	0	1	1	0	0	0	1	0	0	1	0	0	1	2	0	0	7
16:45	2	0	1	0	0	1	0	0	0	0	0	0	0	2	0	0	6
17:00	1	0	0	0	0	2	1	0	0	0	0	0	0	4	0	0	8
17:15	0	0	0	0	0	2	1	0	0	1	0	0	1	2	0	0	7
17:30	5	0	0	0	0	2	0	0	0	0	0	0	0	1	0	0	8
17:45	1	0	0	0	1	2	0	0	0	0	0	0	1	1	0	0	6
18:00																	0
18:15																	0
18:30																	0
18:45																	0
19:00																	0
19:15																	0
19:30																	0
19:45																	0
20:00																	0

TRAFFIC RESEARCH & ANALYSIS, INC.
Specializing in Traffic Data Collection

Traffic Research & Analysis, Inc.
3844 East Indian School Road
Phoenix, AZ 85018
(602) 840-1500

Intersection ID: 1801284
Count Date: 5/2/2018

N 91ST AVE & W GRAND AVE

	21	24	

	North		East		South		West		
	App	Dep	App	Dep	App	Dep	App	Dep	Total
AM	17	15	21	14	5	5	13	22	56
MID	0	0	0	0	0	0	0	0	0
PM	6	7	8	13	2	1	12	7	28
Total	67	67	84	85	24	21	82	84	257

	From North (SB)				From East (WB)				From South (NB)				From West (EB)				INTSEC
	N 91ST AVE				W GRAND AVE				N 91ST AVE				W GRAND AVE				
20:15																	0
20:30																	0
20:45																	0
21:00																	0
21:15																	0
21:30																	0
21:45																	0
22:00																	0
22:15																	0
22:30																	0
22:45																	0
23:00																	0
23:15																	0
23:30																	0
23:45																	0
Total	29	10	28	0	5	54	25	0	2	18	4	0	24	52	6	0	257
AM Peak Hr:																	7:30
Pk Vol	6	2	9	0	1	13	7	0	0	4	1	0	4	7	2	0	56
PHF	0.500	0.500	0.375	n/a	0.250	0.650	0.583	n/a	n/a	0.333	0.250	n/a	0.500	0.350	0.500	n/a	0.824
MID Peak Hr:																	
Pk Vol																	0
PHF																	
PM Peak Hr:																	16:30
Pk Vol	3	1	2	0	0	5	3	0	0	2	0	0	2	10	0	0	28
PHF	0.375	0.250	0.500	n/a	n/a	0.625	0.750	n/a	n/a	0.500	n/a	n/a	0.500	0.625	n/a	n/a	0.875

Comments

Unless shown otherwise, MID period defined as 10:00 AM - 2:00 PM. Peaks defined based on total intersection volume for all vehicle types.

TRAFFIC RESEARCH & ANALYSIS, INC.
Specializing in Traffic Data Collection

Traffic Research & Analysis, Inc.
3844 East Indian School Road
Phoenix, AZ 85018
(602) 840-1500

Intersection ID: 1801284
Count Date: 5/2/2018

N 91ST AVE & W GRAND AVE

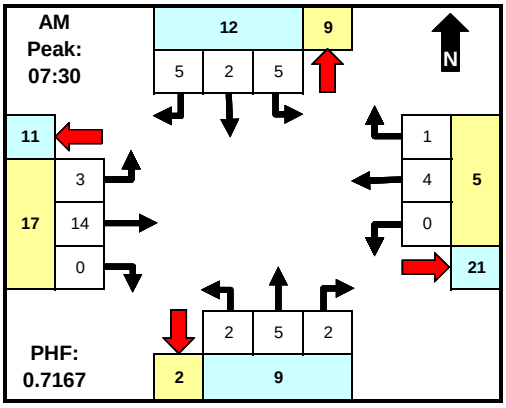

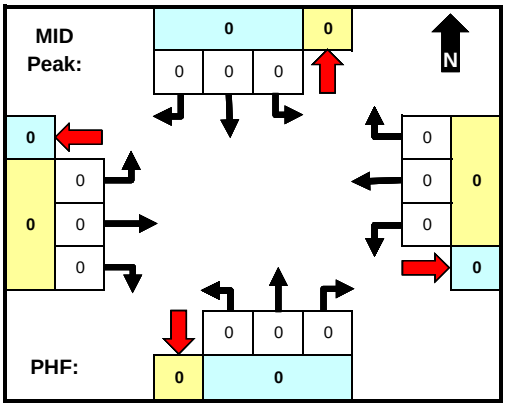

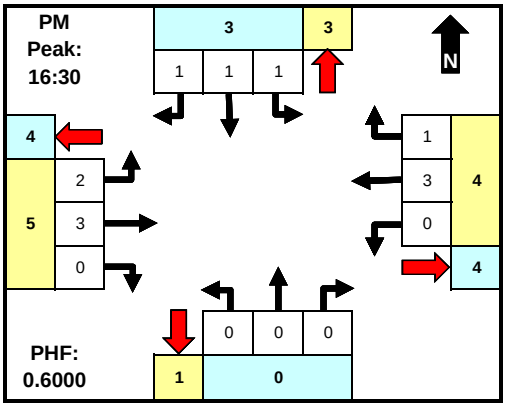

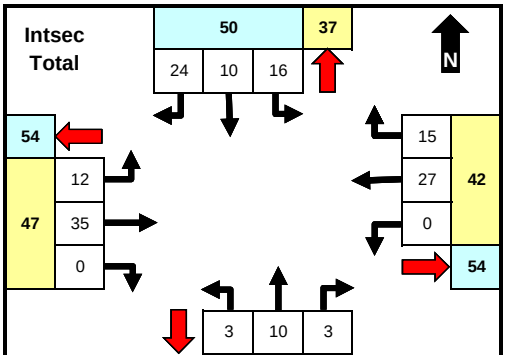

	From North (SB)				From East (WB)				From South (NB)				From West (EB)				INTSEC
	N 91ST AVE				W GRAND AVE				N 91ST AVE				W GRAND AVE				
Time	LT	Thru	RT	U	LT	Thru	RT	U	LT	Thru	RT	U	LT	Thru	RT	U	TOTAL
0:00																	0
0:15																	0
0:30																	0
0:45																	0
1:00																	0
1:15																	0
1:30																	0
1:45																	0
2:00																	0
2:15																	0
2:30																	0
2:45																	0
3:00																	0
3:15																	0
3:30																	0
3:45																	0
4:00																	0
4:15																	0
4:30																	0
4:45																	0
5:00																	0
5:15																	0
5:30																	0
5:45																	0
06:00	0	0	2	0	0	1	3	0	0	1	0	0	0	2	0	0	9
06:15	1	0	0	0	0	1	2	0	0	0	0	0	2	3	0	0	9
06:30	2	0	1	0	0	2	1	0	0	1	0	0	0	3	0	0	10
06:45	1	0	0	0	0	2	0	0	0	0	0	0	0	0	0	0	3
07:00	1	1	1	0	0	1	2	0	0	0	0	0	0	0	0	0	6
07:15	0	0	2	0	0	2	0	0	0	1	0	0	0	0	0	0	5
07:30	0	1	0	0	0	1	1	0	2	0	2	0	2	5	0	0	14
07:45	0	0	0	0	0	1	0	0	0	0	0	0	0	2	0	0	3
08:00	2	1	2	0	0	2	0	0	0	1	0	0	0	3	0	0	11
08:15	3	0	3	0	0	0	0	0	0	4	0	0	1	4	0	0	15
08:30	0	0	0	0	0	0	1	0	0	0	0	0	0	2	0	0	3
08:45	2	3	3	0	0	2	1	0	0	0	0	0	0	2	0	0	13
9:00																	0
9:15																	0
9:30																	0
9:45																	0
10:00																	0
10:15																	0
10:30																	0
10:45																	0
11:00																	0
11:15																	0
11:30																	0
11:45																	0
12:00																	0
12:15																	0
12:30																	0
12:45																	0
13:00																	0
13:15																	0
13:30																	0
13:45																	0
14:00																	0
14:15																	0
14:30																	0
14:45																	0
15:00	0	0	3	0	0	2	0	0	0	0	0	0	0	2	0	0	7
15:15	1	1	0	0	0	1	0	0	0	0	0	0	1	0	0	0	4
15:30	0	0	2	0	0	1	1	0	0	1	0	0	2	0	0	0	7
15:45	0	2	2	0	0	3	0	0	0	0	0	0	1	1	0	0	9
16:00	2	0	1	0	0	1	0	0	1	1	1	0	1	1	0	0	9
16:15	0	0	1	0	0	0	0	0	0	0	0	0	0	1	0	0	2
16:30	1	1	0	0	0	1	0	0	0	0	0	0	0	0	0	0	3
16:45	0	0	0	0	0	0	1	0	0	0	0	0	0	1	0	0	2
17:00	0	0	1	0	0	1	0	0	0	0	0	0	1	2	0	0	5
17:15	0	0	0	0	0	1	0	0	0	0	0	0	1	0	0	0	2
17:30	0	0	0	0	0	1	0	0	0	0	0	0	0	0	0	0	1
17:45	0	0	0	0	0	0	2	0	0	0	0	0	0	1	0	0	3
18:00																	0
18:15																	0
18:30																	0
18:45																	0
19:00																	0
19:15																	0
19:30																	0
19:45																	0
20:00																	0

TRAFFIC RESEARCH & ANALYSIS, INC.
Specializing in Traffic Data Collection

Traffic Research & Analysis, Inc.
3844 East Indian School Road
Phoenix, AZ 85018
(602) 840-1500

Intersection ID: 1801284
Count Date: 5/2/2018

N 91ST AVE & W GRAND AVE

	10	16	

	North		East		South		West		
	App	Dep	App	Dep	App	Dep	App	Dep	Total
AM	12	9	5	21	9	2	17	11	43
MID	0	0	0	0	0	0	0	0	0
PM	3	3	4	4	0	1	5	4	12
Total	50	37	42	54	16	10	47	54	155

	From North (SB)				From East (WB)				From South (NB)				From West (EB)				INTSEC
	N 91ST AVE				W GRAND AVE				N 91ST AVE				W GRAND AVE				
20:15																	0
20:30																	0
20:45																	0
21:00																	0
21:15																	0
21:30																	0
21:45																	0
22:00																	0
22:15																	0
22:30																	0
22:45																	0
23:00																	0
23:15																	0
23:30																	0
23:45																	0
Total	16	10	24	0	0	27	15	0	3	10	3	0	12	35	0	0	155
AM Peak Hr:																	7:30
Pk Vol	5	2	5	0	0	4	1	0	2	5	2	0	3	14	0	0	43
PHF	0.417	0.500	0.417	n/a	n/a	0.500	0.250	n/a	0.250	0.313	0.250	n/a	0.375	0.700	n/a	n/a	0.717
MID Peak Hr:																	
Pk Vol																	0
PHF																	
PM Peak Hr:																	16:30
Pk Vol	1	1	1	0	0	3	1	0	0	0	0	0	2	3	0	0	12
PHF	0.250	0.250	0.250	n/a	n/a	0.750	0.250	n/a	n/a	n/a	n/a	n/a	0.500	0.375	n/a	n/a	0.600

Comments

Unless shown otherwise, MID period defined as 10:00 AM - 2:00 PM. Peaks defined based on total intersection volume for all vehicle types.

TRAFFIC RESEARCH & ANALYSIS, INC.
Specializing in Traffic Data Collection

Traffic Research & Analysis, Inc.
3844 East Indian School Road
Phoenix, AZ 85018
(602) 840-1500

Intersection ID: 1801287
Count Date: 2/5/2018

N 99TH AVE & US 60/GRAND AVE

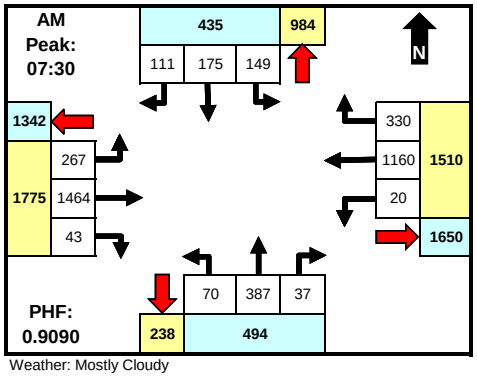

Weather: Mostly Cloudy

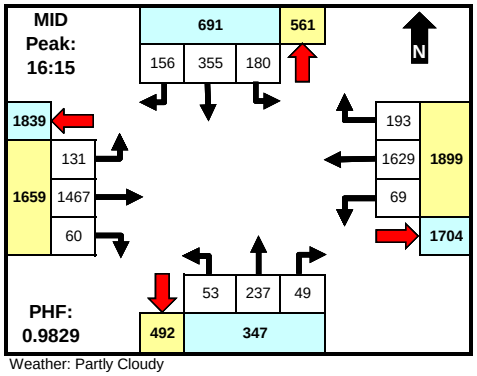

Weather: Partly Cloudy

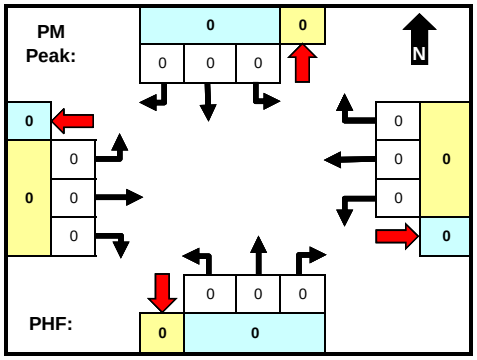

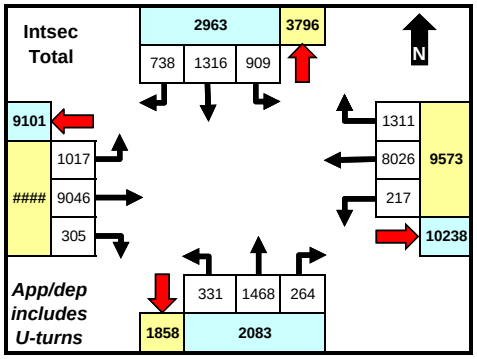

	North		East		South		West		
	App	Dep	App	Dep	App	Dep	App	Dep	Total
AM	435	984	1510	1650	494	238	1775	1342	**4214**
MID	691	561	1899	1704	347	492	1659	1839	**4596**
PM	0	0	0	0	0	0	0	0	**0**
Total	2963	3796	9573	10238	2083	1858	10374	9101	**24993**

	From North (SB)					From East (WB)					From South (NB)					From West (EB)					INTSEC
	N 99TH AVE					US 60/GRAND AVE					N 99TH AVE					US 60/GRAND AVE					
Time	LT	Thru	RT	U	Cwlk	LT	Thru	RT	U	Cwlk	LT	Thru	RT	U	Cwlk	LT	Thru	RT	U	Cwlk	TOTAL
0:00																					0
0:15																					0
0:30																					0
0:45																					0
1:00																					0
1:15																					0
1:30																					0
1:45																					0
2:00																					0
2:15																					0
2:30																					0
2:45																					0
3:00																					0
3:15																					0
3:30																					0
3:45																					0
4:00																					0
4:15																					0
4:30																					0
4:45																					0
5:00																					0
5:15																					0
5:30																					0
5:45																					0
6:00	31	19	6	0		0	187	23	0		6	24	8	0		19	365	5	0		**693**
6:15	22	13	11	0		1	217	46	0		7	31	9	0		43	524	5	0		**929**
6:30	23	12	15	0		6	233	30	0		10	48	10	0		47	463	6	0		**903**
6:45	36	34	13	0		2	294	55	0		13	56	10	0		47	481	8	0		**1049**
7:00	36	30	19	0		5	246	42	0		10	37	8	0		60	422	11	0		**926**
7:15	35	34	19	0		5	242	55	0		10	49	8	0		47	456	11	0		**971**
7:30	43	40	27	0		4	306	65	0		16	85	12	0		70	358	12	0		**1038**
7:45	31	49	22	0		7	311	103	0		17	122	10	0		83	396	8	0		**1159**
8:00	40	49	29	0		3	244	75	0		17	95	6	0		71	367	8	1		**1005**
8:15	35	37	33	0		6	299	87	0		20	85	9	0		43	343	15	0		**1012**
8:30	37	52	28	0		12	307	52	1		9	71	13	0		53	364	16	0		**1015**
8:45	33	69	42	0		8	267	46	1		23	78	11	1		42	335	23	0		**979**
9:00																					0
9:15																					0
9:30																					0
9:45																					0
10:00																					0
10:15																					0
10:30																					0
10:45																					0
11:00																					0
11:15																					0
11:30																					0
11:45																					0
12:00																					0
12:15																					0
12:30																					0
12:45																					0
13:00																					0
13:15																					0
13:30																					0
13:45																					0
14:00																					0
14:15																					0
14:30																					0
14:45																					0
15:00	40	70	42	0		9	334	57	3		11	82	19	0		31	412	12	2		**1124**
15:15	40	70	53	0		12	444	66	1		20	59	11	2		34	313	12	0		**1137**
15:30	38	74	51	0		11	352	58	0		20	54	10	1		35	315	22	1		**1042**
15:45	48	76	39	0		11	412	65	1		12	61	14	0		22	354	17	0		**1132**
16:00	43	70	44	0		17	406	42	1		18	52	14	0		36	358	9	0		**1110**
16:15	51	90	41	0		18	408	48	1		16	67	12	0		49	343	15	0		**1159**
16:30	35	91	44	0		14	407	44	3		10	65	12	3		18	408	15	0		**1169**
16:45	43	79	31	0		18	416	51	3		14	43	10	2		38	376	19	1		**1144**
17:00	51	95	40	0		19	398	50	1		13	62	15	3		26	340	11	0		**1124**
17:15	46	60	33	0		6	413	57	0		16	71	11	3		37	374	15	1		**1143**
17:30	32	54	27	0		15	462	48	2		7	36	10	3		41	283	15	0		**1035**
17:45	40	49	29	0		8	421	46	1		16	35	12	2		25	296	15	0		**995**
18:00																					0
18:15																					0
18:30																					0
18:45																					0
19:00																					0
19:15																					0
19:30																					0
19:45																					0
20:00																					0
20:15																					0
20:30																					0
20:45																					0
21:00																					0
21:15																					0
21:30																					0
21:45																					0
22:00																					0
22:15																					0
22:30																					0
22:45																					0
Total																					

TRAFFIC RESEARCH & ANALYSIS, INC.
Specializing in Traffic Data Collection

Traffic Research & Analysis, Inc.
3844 East Indian School Road
Phoenix, AZ 85018
(602) 840-1500

Intersection ID: 1801287
Count Date: 2/5/2018

N 99TH AVE & US 60/GRAND AVE

	From North (SB)					From East (WB)					From South (NB)					From West (EB)					INTSEC
	N 99TH AVE					US 60/GRAND AVE					N 99TH AVE					US 60/GRAND AVE					
23:00																					0
23:15																					0
23:30																					0
23:45																					0
Total	909	1316	738	0	0	217	8026	1311	19	0	331	1468	264	20	0	1017	9046	305	6	0	24993
AM Peak Hr:																					7:30
Pk Vol	149	175	111	0	0	20	1160	330	0	0	70	387	37	0	0	267	1464	43	1	0	4214
PHF	0.866	0.893	0.841	n/a	n/a	0.714	0.932	0.801	n/a	n/a	0.875	0.793	0.771	n/a	n/a	0.804	0.924	0.717	0.250	n/a	0.909
MID Peak Hr:																					16:15
Pk Vol	180	355	156	0	0	69	1629	193	8	0	53	237	49	8	0	131	1467	60	1	0	4596
PHF	0.882	0.934	0.886	n/a	n/a	0.908	0.979	0.946	0.667	n/a	0.828	0.884	0.817	0.667	n/a	0.668	0.899	0.789	0.250	n/a	0.983
PM Peak Hr:																					
Pk Vol																					0
PHF																					

Comments

Unless shown otherwise, MID period defined as 10:00 AM - 2:00 PM. Peaks defined based on total intersection volume for all vehicle types. Chart totals do not include crosswalk data.

TRAFFIC RESEARCH & ANALYSIS, INC.
Specializing in Traffic Data Collection

Traffic Research & Analysis, Inc.
3844 East Indian School Road
Phoenix, AZ 85018
(602) 840-1500

Intersection ID: 1801287
Count Date: 2/5/2018

N 99TH AVE & US 60/GRAND AVE

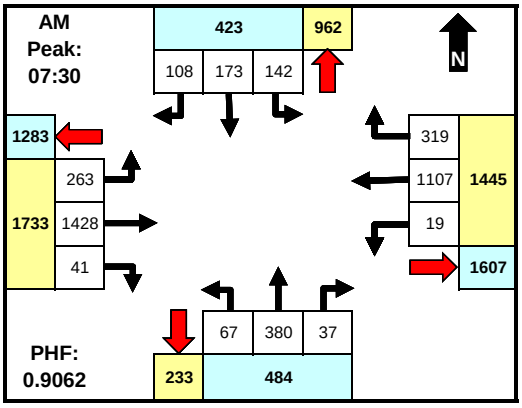

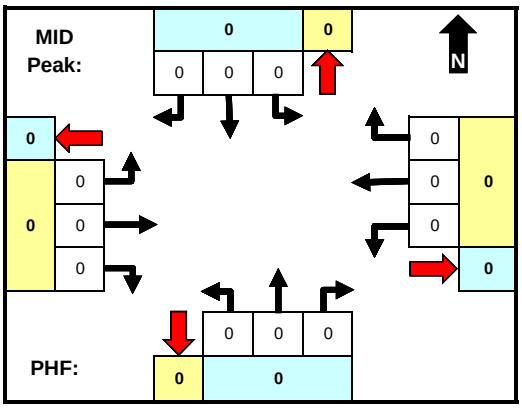

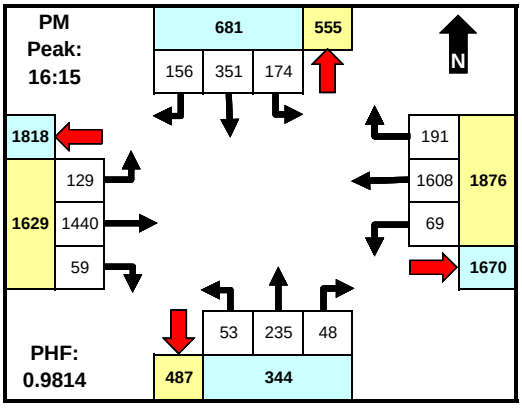

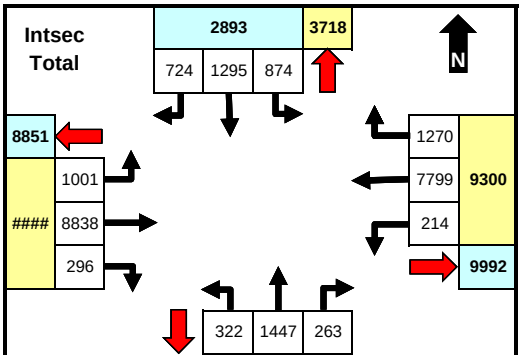

	From North (SB)				From East (WB)				From South (NB)				From West (EB)				INTSEC
	N 99TH AVE				US 60/GRAND AVE				N 99TH AVE				US 60/GRAND AVE				
Time	LT	Thru	RT	U	LT	Thru	RT	U	LT	Thru	RT	U	LT	Thru	RT	U	TOTAL
0:00																	0
0:15																	0
0:30																	0
0:45																	0
1:00																	0
1:15																	0
1:30																	0
1:45																	0
2:00																	0
2:15																	0
2:30																	0
2:45																	0
3:00																	0
3:15																	0
3:30																	0
3:45																	0
4:00																	0
4:15																	0
4:30																	0
4:45																	0
5:00																	0
5:15																	0
5:30																	0
5:45																	0
06:00	30	19	6	0	0	178	22	0	6	24	8	0	19	358	5	0	675
06:15	22	12	10	0	1	203	42	0	6	31	9	0	42	514	4	0	896
06:30	23	12	15	0	6	221	28	0	10	47	10	0	45	453	5	0	875
06:45	36	34	13	0	2	280	51	0	12	55	10	0	47	471	8	0	1019
07:00	35	29	18	0	4	236	40	0	10	35	8	0	59	418	11	0	903
07:15	35	33	18	0	5	235	51	0	10	49	8	0	46	448	11	0	949
07:30	39	39	27	0	4	294	64	0	14	83	12	0	69	352	10	0	1007
07:45	31	49	21	0	6	300	100	0	17	120	10	0	80	385	8	0	1127
08:00	39	48	28	0	3	229	72	0	17	94	6	0	71	357	8	1	973
08:15	33	37	32	0	6	284	83	0	19	83	9	0	43	334	15	0	978
08:30	36	51	25	0	12	299	51	0	8	69	13	0	53	353	16	0	986
08:45	32	67	42	0	8	250	46	0	23	78	11	1	41	324	22	0	945
9:00																	0
9:15																	0
9:30																	0
9:45																	0
10:00																	0
10:15																	0
10:30																	0
10:45																	0
11:00																	0
11:15																	0
11:30																	0
11:45																	0
12:00																	0
12:15																	0
12:30																	0
12:45																	0
13:00																	0
13:15																	0
13:30																	0
13:45																	0
14:00																	0
14:15																	0
14:30																	0
14:45																	0
15:00	38	68	41	0	9	321	55	3	11	79	19	0	29	395	12	2	1082
15:15	37	70	52	0	12	439	65	1	20	59	11	2	33	303	12	0	1116
15:30	35	71	49	0	11	343	56	0	18	54	10	1	35	304	22	1	1010
15:45	44	73	38	0	11	396	63	1	11	59	14	0	21	342	16	0	1089
16:00	42	69	44	0	16	402	39	1	18	51	14	0	36	354	8	0	1094
16:15	50	89	41	0	18	404	47	1	16	66	12	0	48	336	15	0	1143
16:30	33	90	44	0	14	402	44	3	10	64	12	3	18	402	15	0	1154
16:45	42	78	31	0	18	411	51	3	14	43	9	2	38	371	18	1	1130
17:00	49	94	40	0	19	391	49	1	13	62	15	3	25	331	11	0	1103
17:15	44	60	33	0	6	412	57	0	16	71	11	3	37	370	14	1	1135
17:30	30	54	27	0	15	453	48	2	7	36	10	3	41	275	15	0	1016
17:45	39	49	29	0	8	416	46	1	16	35	12	2	25	288	15	0	981
18:00																	0
18:15																	0
18:30																	0
18:45																	0
19:00																	0
19:15																	0
19:30																	0
19:45																	0
20:00																	0

TRAFFIC RESEARCH & ANALYSIS, INC.
Specializing in Traffic Data Collection

Traffic Research & Analysis, Inc.
3844 East Indian School Road
Phoenix, AZ 85018
(602) 840-1500

Intersection ID: 1801287
Count Date: 2/5/2018

N 99TH AVE & US 60/GRAND AVE

	1825	2052	

	North		East		South		West		
	App	Dep	App	Dep	App	Dep	App	Dep	Total
AM	423	962	1445	1607	484	233	1733	1283	4085
MID	0	0	0	0	0	0	0	0	0
PM	681	555	1876	1670	344	487	1629	1818	4530
Total	2893	3718	9300	9992	2052	1825	10141	8851	24386

	From North (SB)				From East (WB)				From South (NB)				From West (EB)				INTSEC
	N 99TH AVE				US 60/GRAND AVE				N 99TH AVE				US 60/GRAND AVE				
20:15																	0
20:30																	0
20:45																	0
21:00																	0
21:15																	0
21:30																	0
21:45																	0
22:00																	0
22:15																	0
22:30																	0
22:45																	0
23:00																	0
23:15																	0
23:30																	0
23:45																	0
Total	874	1295	724	0	214	7799	1270	17	322	1447	263	20	1001	8838	296	6	24386
AM Peak Hr:																	7:30
Pk Vol	142	173	108	0	19	1107	319	0	67	380	37	0	263	1428	41	1	4085
PHF	0.910	0.883	0.844	n/a	0.792	0.923	0.798	n/a	0.882	0.792	0.771	n/a	0.822	0.927	0.683	0.250	0.906
MID Peak Hr:																	
Pk Vol																	0
PHF																	
PM Peak Hr:																	16:15
Pk Vol	174	351	156	0	69	1608	191	8	53	235	48	8	129	1440	59	1	4530
PHF	0.870	0.934	0.886	n/a	0.908	0.978	0.936	0.667	0.828	0.890	0.800	0.667	0.672	0.896	0.819	0.250	0.981

Comments

Unless shown otherwise, MID period defined as 10:00 AM - 2:00 PM. Peaks defined based on total intersection volume for all vehicle types.

TRAFFIC RESEARCH & ANALYSIS, INC.
Specializing in Traffic Data Collection

Traffic Research & Analysis, Inc.
3844 East Indian School Road
Phoenix, AZ 85018
(602) 840-1500

Intersection ID: 1801287
Count Date: 2/5/2018

N 99TH AVE & US 60/GRAND AVE

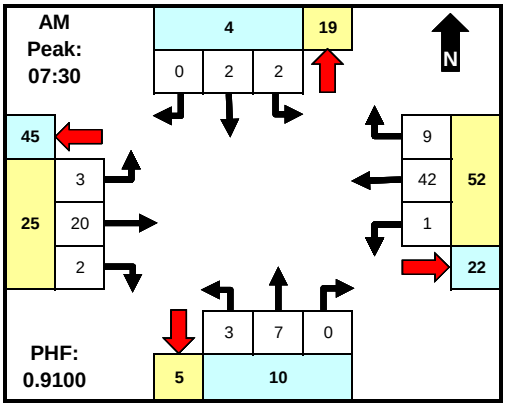

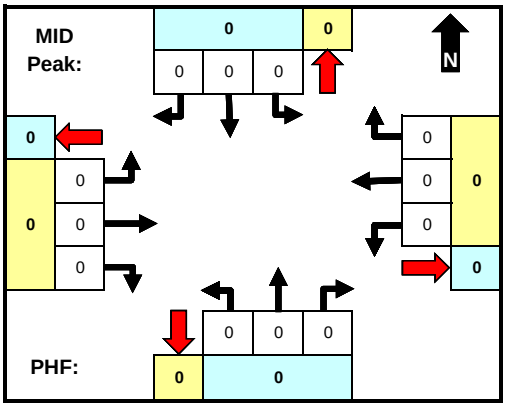

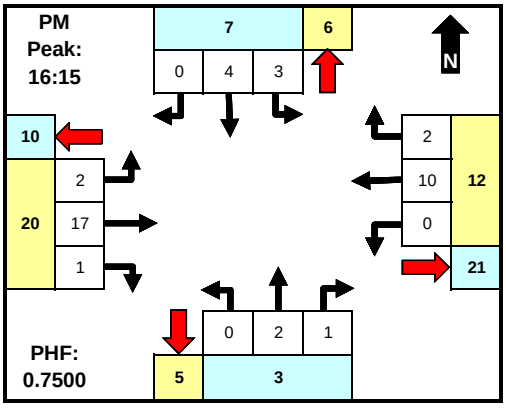

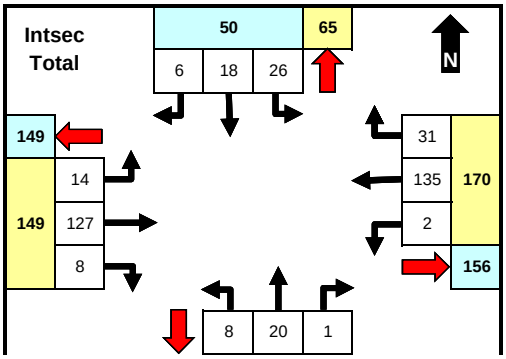

	From North (SB)				From East (WB)				From South (NB)				From West (EB)				INTSEC
	N 99TH AVE				US 60/GRAND AVE				N 99TH AVE				US 60/GRAND AVE				
Time	LT	Thru	RT	U	LT	Thru	RT	U	LT	Thru	RT	U	LT	Thru	RT	U	TOTAL
0:00																	0
0:15																	0
0:30																	0
0:45																	0
1:00																	0
1:15																	0
1:30																	0
1:45																	0
2:00																	0
2:15																	0
2:30																	0
2:45																	0
3:00																	0
3:15																	0
3:30																	0
3:45																	0
4:00																	0
4:15																	0
4:30																	0
4:45																	0
5:00																	0
5:15																	0
5:30																	0
5:45																	0
06:00	1	0	0	0	0	2	1	0	0	0	0	0	0	3	0	0	7
06:15	0	0	1	0	0	6	3	0	1	0	0	0	1	5	1	0	18
06:30	0	0	0	0	0	6	1	0	0	1	0	0	2	4	1	0	15
06:45	0	0	0	0	0	10	3	0	1	1	0	0	0	5	0	0	20
07:00	0	1	0	0	1	5	1	0	0	2	0	0	1	4	0	0	15
07:15	0	1	0	0	0	6	2	0	0	0	0	0	1	3	0	0	13
07:30	1	1	0	0	0	10	1	0	2	2	0	0	0	3	2	0	22
07:45	0	0	0	0	1	11	2	0	0	2	0	0	3	6	0	0	25
08:00	0	1	0	0	0	8	2	0	0	1	0	0	0	7	0	0	19
08:15	1	0	0	0	0	13	4	0	1	2	0	0	0	4	0	0	25
08:30	1	1	1	0	0	6	1	1	1	2	0	0	0	5	0	0	19
08:45	1	1	0	0	0	10	0	1	0	0	0	0	0	8	1	0	22
9:00																	0
9:15																	0
9:30																	0
9:45																	0
10:00																	0
10:15																	0
10:30																	0
10:45																	0
11:00																	0
11:15																	0
11:30																	0
11:45																	0
12:00																	0
12:15																	0
12:30																	0
12:45																	0
13:00																	0
13:15																	0
13:30																	0
13:45																	0
14:00																	0
14:15																	0
14:30																	0
14:45																	0
15:00	2	2	0	0	0	5	2	0	0	2	0	0	2	12	0	0	27
15:15	3	0	1	0	0	4	1	0	0	0	0	0	1	9	0	0	19
15:30	3	3	2	0	0	5	0	0	1	0	0	0	0	11	0	0	25
15:45	4	2	1	0	0	7	2	0	1	2	0	0	1	10	1	0	31
16:00	1	1	0	0	0	4	3	0	0	1	0	0	0	2	1	0	13
16:15	0	1	0	0	0	1	1	0	0	1	0	0	1	6	0	0	11
16:30	1	1	0	0	0	2	0	0	0	1	0	0	0	4	0	0	9
16:45	0	1	0	0	0	3	0	0	0	0	1	0	0	2	1	0	8
17:00	2	1	0	0	0	4	1	0	0	0	0	0	1	5	0	0	14
17:15	2	0	0	0	0	0	0	0	0	0	0	0	0	2	0	0	4
17:30	2	0	0	0	0	4	0	0	0	0	0	0	0	4	0	0	10
17:45	1	0	0	0	0	3	0	0	0	0	0	0	0	3	0	0	7
18:00																	0
18:15																	0
18:30																	0
18:45																	0
19:00																	0
19:15																	0
19:30																	0
19:45																	0
20:00																	0

TRAFFIC RESEARCH & ANALYSIS, INC.
Specializing in Traffic Data Collection

Traffic Research & Analysis, Inc.
3844 East Indian School Road
Phoenix, AZ 85018
(602) 840-1500

Intersection ID: 1801287
Count Date: 2/5/2018

N 99TH AVE & US 60/GRAND AVE

	28	29	

	North		East		South		West		
	App	Dep	App	Dep	App	Dep	App	Dep	Total
AM	4	19	52	22	10	5	25	45	91
MID	0	0	0	0	0	0	0	0	0
PM	7	6	12	21	3	5	20	10	42
Total	50	65	170	156	29	28	149	149	398

	From North (SB)				From East (WB)				From South (NB)				From West (EB)				INTSEC
	N 99TH AVE				US 60/GRAND AVE				N 99TH AVE				US 60/GRAND AVE				
20:15																	0
20:30																	0
20:45																	0
21:00																	0
21:15																	0
21:30																	0
21:45																	0
22:00																	0
22:15																	0
22:30																	0
22:45																	0
23:00																	0
23:15																	0
23:30																	0
23:45																	0
Total	26	18	6	0	2	135	31	2	8	20	1	0	14	127	8	0	398
AM Peak Hr:																	7:30
Pk Vol	2	2	0	0	1	42	9	0	3	7	0	0	3	20	2	0	91
PHF	0.500	0.500	n/a	n/a	0.250	0.808	0.563	n/a	0.375	0.875	n/a	n/a	0.250	0.714	0.250	n/a	0.910
MID Peak Hr:																	
Pk Vol																	0
PHF																	
PM Peak Hr:																	16:15
Pk Vol	3	4	0	0	0	10	2	0	0	2	1	0	2	17	1	0	42
PHF	0.375	1.000	n/a	n/a	n/a	0.625	0.500	n/a	n/a	0.500	0.250	n/a	0.500	0.708	0.250	n/a	0.750

Comments

Unless shown otherwise, MID period defined as 10:00 AM - 2:00 PM. Peaks defined based on total intersection volume for all vehicle types.

TRAFFIC RESEARCH & ANALYSIS, INC.
Specializing in Traffic Data Collection

Traffic Research & Analysis, Inc.
3844 East Indian School Road
Phoenix, AZ 85018
(602) 840-1500

Intersection ID: 1801287
Count Date: 2/5/2018

N 99TH AVE & US 60/GRAND AVE

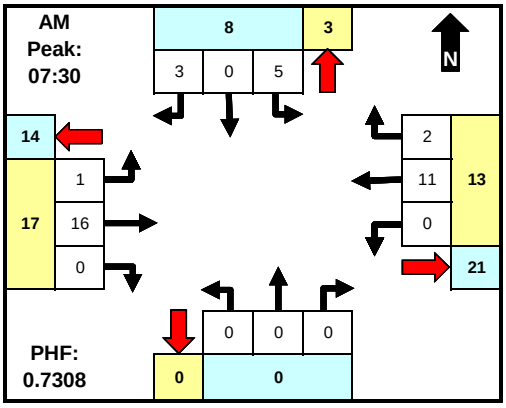

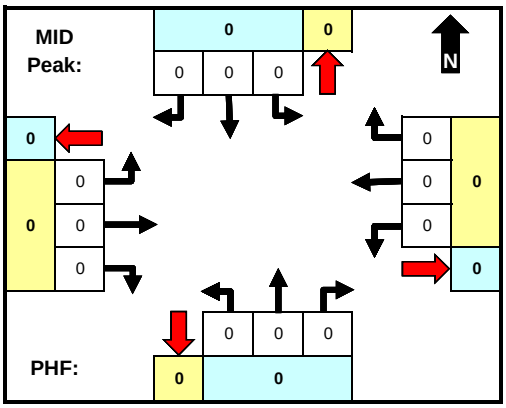

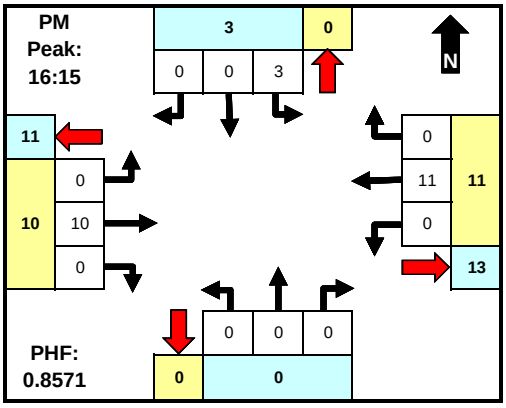

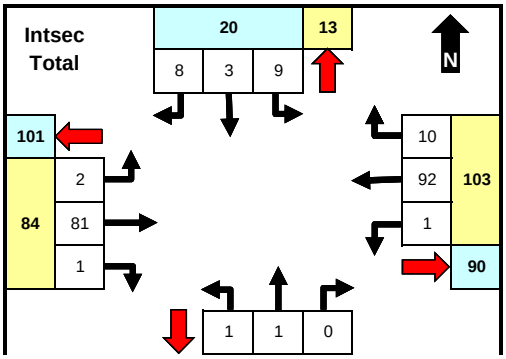

	From North (SB)				From East (WB)				From South (NB)				From West (EB)				INTSEC
	N 99TH AVE				US 60/GRAND AVE				N 99TH AVE				US 60/GRAND AVE				
Time	LT	Thru	RT	U	LT	Thru	RT	U	LT	Thru	RT	U	LT	Thru	RT	U	TOTAL
0:00																	0
0:15																	0
0:30																	0
0:45																	0
1:00																	0
1:15																	0
1:30																	0
1:45																	0
2:00																	0
2:15																	0
2:30																	0
2:45																	0
3:00																	0
3:15																	0
3:30																	0
3:45																	0
4:00																	0
4:15																	0
4:30																	0
4:45																	0
5:00																	0
5:15																	0
5:30																	0
5:45																	0
06:00	0	0	0	0	0	7	0	0	0	0	0	0	0	4	0	0	11
06:15	0	1	0	0	0	8	1	0	0	0	0	0	0	5	0	0	15
06:30	0	0	0	0	0	6	1	0	0	0	0	0	0	6	0	0	13
06:45	0	0	0	0	0	4	1	0	0	0	0	0	0	5	0	0	10
07:00	1	0	1	0	0	5	1	0	0	0	0	0	0	0	0	0	8
07:15	0	0	1	0	0	1	2	0	0	0	0	0	0	5	0	0	9
07:30	3	0	0	0	0	2	0	0	0	0	0	0	1	3	0	0	9
07:45	0	0	1	0	0	0	1	0	0	0	0	0	0	5	0	0	7
08:00	1	0	1	0	0	7	1	0	0	0	0	0	0	3	0	0	13
08:15	1	0	1	0	0	2	0	0	0	0	0	0	0	5	0	0	9
08:30	0	0	2	0	0	2	0	0	0	0	0	0	0	6	0	0	10
08:45	0	1	0	0	0	7	0	0	0	0	0	0	1	3	0	0	12
9:00																	0
9:15																	0
9:30																	0
9:45																	0
10:00																	0
10:15																	0
10:30																	0
10:45																	0
11:00																	0
11:15																	0
11:30																	0
11:45																	0
12:00																	0
12:15																	0
12:30																	0
12:45																	0
13:00																	0
13:15																	0
13:30																	0
13:45																	0
14:00																	0
14:15																	0
14:30																	0
14:45																	0
15:00	0	0	1	0	0	8	0	0	0	1	0	0	0	5	0	0	15
15:15	0	0	0	0	0	1	0	0	0	0	0	0	0	1	0	0	2
15:30	0	0	0	0	0	4	2	0	1	0	0	0	0	0	0	0	7
15:45	0	1	0	0	0	9	0	0	0	0	0	0	0	2	0	0	12
16:00	0	0	0	0	1	0	0	0	0	0	0	0	0	2	0	0	3
16:15	1	0	0	0	0	3	0	0	0	0	0	0	0	1	0	0	5
16:30	1	0	0	0	0	3	0	0	0	0	0	0	0	2	0	0	6
16:45	1	0	0	0	0	2	0	0	0	0	0	0	0	3	0	0	6
17:00	0	0	0	0	0	3	0	0	0	0	0	0	0	4	0	0	7
17:15	0	0	0	0	0	1	0	0	0	0	0	0	0	2	1	0	4
17:30	0	0	0	0	0	5	0	0	0	0	0	0	0	4	0	0	9
17:45	0	0	0	0	0	2	0	0	0	0	0	0	0	5	0	0	7
18:00																	0
18:15																	0
18:30																	0
18:45																	0
19:00																	0
19:15																	0
19:30																	0
19:45																	0
20:00																	0

TRAFFIC RESEARCH & ANALYSIS, INC.
Specializing in Traffic Data Collection

Traffic Research & Analysis, Inc.
3844 East Indian School Road
Phoenix, AZ 85018
(602) 840-1500

Intersection ID: 1801287
Count Date: 2/5/2018

N 99TH AVE & US 60/GRAND AVE

	5	2	

	North		East		South		West		
	App	Dep	App	Dep	App	Dep	App	Dep	Total
AM	8	3	13	21	0	0	17	14	38
MID	0	0	0	0	0	0	0	0	0
PM	3	0	11	13	0	0	10	11	24
Total	20	13	103	90	2	5	84	101	209

	From North (SB)				From East (WB)				From South (NB)				From West (EB)				INTSEC
	N 99TH AVE				US 60/GRAND AVE				N 99TH AVE				US 60/GRAND AVE				
20:15																	0
20:30																	0
20:45																	0
21:00																	0
21:15																	0
21:30																	0
21:45																	0
22:00																	0
22:15																	0
22:30																	0
22:45																	0
23:00																	0
23:15																	0
23:30																	0
23:45																	0
Total	9	3	8	0	1	92	10	0	1	1	0	0	2	81	1	0	209
AM Peak Hr:																	7:30
Pk Vol	5	0	3	0	0	11	2	0	0	0	0	0	1	16	0	0	38
PHF	0.417	n/a	0.750	n/a	n/a	0.393	0.500	n/a	n/a	n/a	n/a	n/a	0.250	0.800	n/a	n/a	0.731
MID Peak Hr:																	
Pk Vol																	0
PHF																	
PM Peak Hr:																	16:15
Pk Vol	3	0	0	0	0	11	0	0	0	0	0	0	0	10	0	0	24
PHF	0.750	n/a	n/a	n/a	n/a	0.917	n/a	n/a	n/a	n/a	n/a	n/a	n/a	0.625	n/a	n/a	0.857

Comments

Unless shown otherwise, MID period defined as 10:00 AM - 2:00 PM. Peaks defined based on total intersection volume for all vehicle types.

TRAFFIC RESEARCH & ANALYSIS, INC.
Specializing in Traffic Data Collection

Traffic Research & Analysis, Inc.
3844 East Indian School Road
Phoenix, AZ 85018
(602) 840-1500

Intersection ID: 1801285
Count Date: 5/2/2018

SR LP 101 NB & US-60 / GRAND AVE

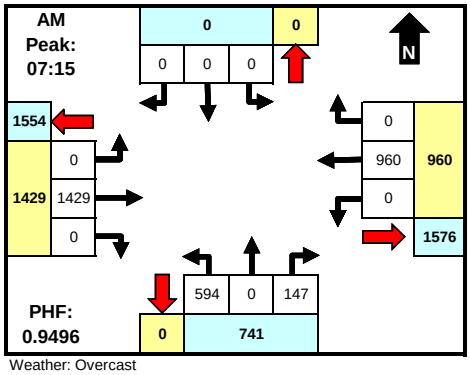

Weather: Overcast

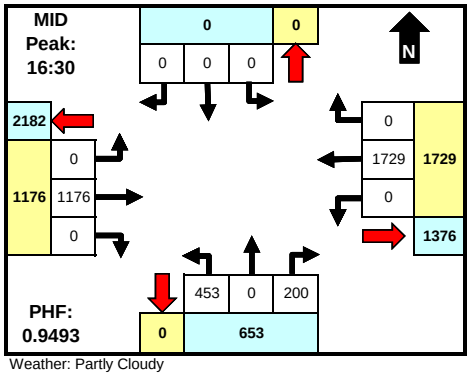

Weather: Partly Cloudy

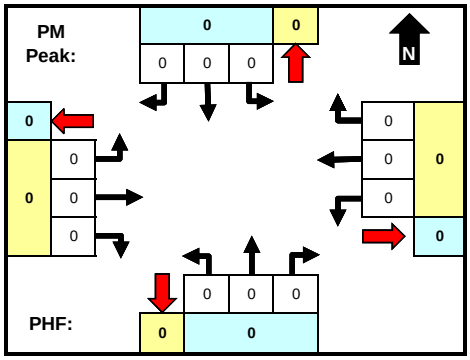

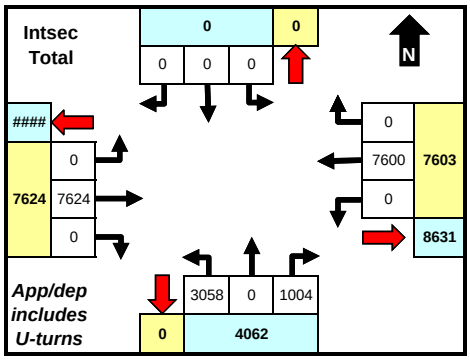

	North		East		South		West		
	App	Dep	App	Dep	App	Dep	App	Dep	Total
AM	0	0	960	1576	741	0	1429	1554	**3130**
MID	0	0	1729	1376	653	0	1176	2182	**3558**
PM	0	0	0	0	0	0	0	0	**0**
Total	0	0	7603	8631	4062	0	7624	10658	**19289**

	From North (SB)					From East (WB)					From South (NB)					From West (EB)					INTSEC
	NONE					US-60 / GRAND AVE					SR LP 101 NB					US-60 / GRAND AVE					
Time	LT	Thru	RT	U	Cwlk	LT	Thru	RT	U	Cwlk	LT	Thru	RT	U	Cwlk	LT	Thru	RT	U	Cwlk	TOTAL
0:00																					0
0:15																					0
0:30																					0
0:45																					0
1:00																					0
1:15																					0
1:30																					0
1:45																					0
2:00																					0
2:15																					0
2:30																					0
2:45																					0
3:00																					0
3:15																					0
3:30																					0
3:45																					0
4:00																					0
4:15																					0
4:30																					0
4:45																					0
5:00																					0
5:15																					0
5:30																					0
5:45																					0
6:00							146		1		120		19	0			315		0		601
6:15							173		0		107		20	0			478		0		778
6:30							180		0		130		24	0			437		0		771
6:45							196		0		147		29	0			388		0		760
7:00							219		0		126		23	0			366		0		734
7:15							187		0		123		23	0			450		0		783
7:30							289		0		123		30	0			338		0		780
7:45							243		0		208		50	0			323		0		824
8:00							241		0		140		44	0			318		0		743
8:15							202		0		145		70	0			328		0		745
8:30							253		0		153		22	0			288		0		716
8:45							268		0		123		34	0			284		0		709
9:00																					0
9:15																					0
9:30																					0
9:45																					0
10:00																					0
10:15																					0
10:30																					0
10:45																					0
11:00																					0
11:15																					0
11:30																					0
11:45																					0
12:00																					0
12:15																					0
12:30																					0
12:45																					0
13:00																					0
13:15																					0
13:30																					0
13:45																					0
14:00																					0
14:15																					0
14:30																					0
14:45																					0
15:00							369		0		121		63	0			326		0		879
15:15							422		1		131		35	0			228		0		817
15:30							397		0		120		59	0			285		0		861
15:45							395		0		120		52	0			263		0		830
16:00							387		0		121		55	0			257		0		820
16:15							439		0		111		52	0			318		0		920
16:30							496		0		105		47	0			289		0		937
16:45							387		0		127		58	0			278		0		850
17:00							409		0		106		39	0			291		0		845
17:15							437		0		115		56	0			318		0		926
17:30							449		1		98		46	0			224		0		818
17:45							416		0		138		54	0			234		0		842
18:00																					0
18:15																					0
18:30																					0
18:45																					0
19:00																					0
19:15																					0
19:30																					0
19:45																					0
20:00																					0
20:15																					0
20:30																					0
20:45																					0
21:00																					0
21:15																					0
21:30																					0
21:45																					0
22:00																					0
22:15																					0
22:30																					0
22:45																					0
Total																					

TRAFFIC RESEARCH & ANALYSIS, INC.
Specializing in Traffic Data Collection

Traffic Research & Analysis, Inc.
3844 East Indian School Road
Phoenix, AZ 85018
(602) 840-1500

Intersection ID: 1801285
Count Date: 5/2/2018

SR LP 101 NB & US-60 / GRAND AVE

	From North (SB)					From East (WB)					From South (NB)					From West (EB)					INTSEC
	NONE					US-60 / GRAND AVE					SR LP 101 NB					US-60 / GRAND AVE					
23:00																					0
23:15																					0
23:30																					0
23:45																					0
Total	0	0	0	0	0	0	7600	0	3	0	3058	0	1004	0	0	0	7624	0	0	0	19289
AM Peak Hr:																					7:15
Pk Vol	0	0	0	0	0	0	960	0	0	0	594	0	147	0	0	0	1429	0	0	0	3130
PHF	n/a	n/a	n/a	n/a	n/a	n/a	0.830	n/a	n/a	n/a	0.714	n/a	0.735	n/a	n/a	n/a	0.794	n/a	n/a	n/a	0.950
MID Peak Hr:																					16:30
Pk Vol	0	0	0	0	0	0	1729	0	0	0	453	0	200	0	0	0	1176	0	0	0	3558
PHF	n/a	n/a	n/a	n/a	n/a	n/a	0.871	n/a	n/a	n/a	0.892	n/a	0.862	n/a	n/a	n/a	0.925	n/a	n/a	n/a	0.949
PM Peak Hr:																					
Pk Vol																					0
PHF																					

Comments

Unless shown otherwise, MID period defined as 10:00 AM - 2:00 PM. Peaks defined based on total intersection volume for all vehicle types. Chart totals do not include crosswalk data.

TRAFFIC RESEARCH & ANALYSIS, INC.
Specializing in Traffic Data Collection

Traffic Research & Analysis, Inc.
3844 East Indian School Road
Phoenix, AZ 85018
(602) 840-1500

Intersection ID: 1801285
Count Date: 5/2/2018

SR LP 101 NB & US-60 / GRAND AVE

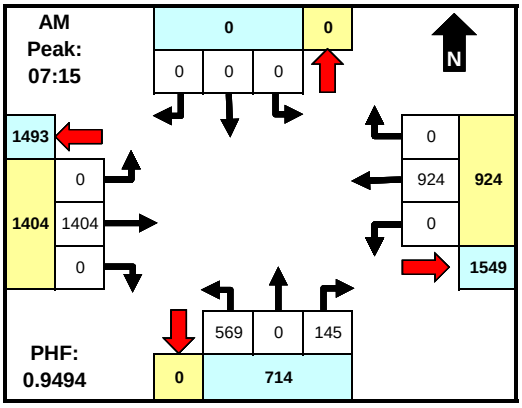

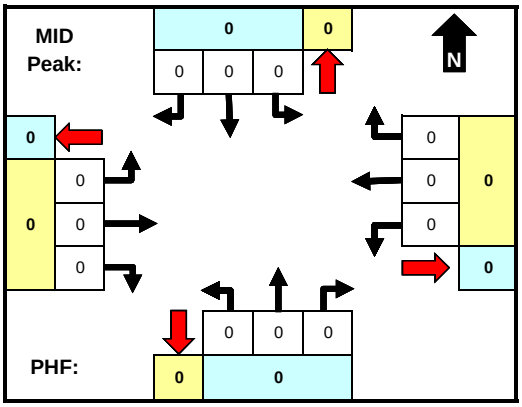

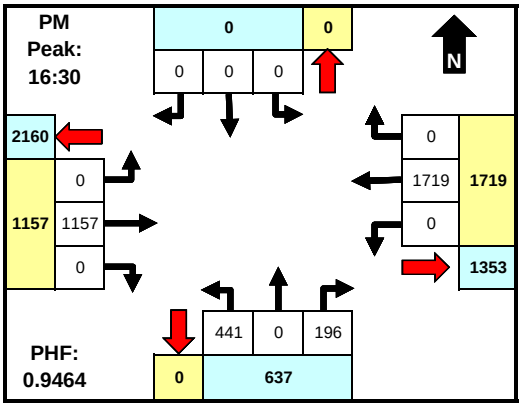

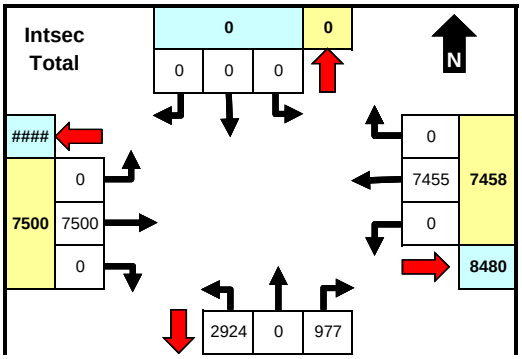

	From North (SB)				From East (WB)				From South (NB)				From West (EB)				INTSEC
	NONE				US-60 / GRAND AVE				SR LP 101 NB				US-60 / GRAND AVE				
Time	LT	Thru	RT	U	LT	Thru	RT	U	LT	Thru	RT	U	LT	Thru	RT	U	TOTAL
0:00																	0
0:15																	0
0:30																	0
0:45																	0
1:00																	0
1:15																	0
1:30																	0
1:45																	0
2:00																	0
2:15																	0
2:30																	0
2:45																	0
3:00																	0
3:15																	0
3:30																	0
3:45																	0
4:00																	0
4:15																	0
4:30																	0
4:45																	0
5:00																	0
5:15																	0
5:30																	0
5:45																	0
6:00						137		1	112		18	0		310		0	578
6:15						165		0	100		18	0		471		0	754
6:30						175		0	120		24	0		432		0	751
6:45						191		0	139		29	0		385		0	744
7:00						214		0	117		22	0		363		0	716
7:15						178		0	121		23	0		446		0	768
7:30						281		0	116		29	0		332		0	758
7:45						233		0	201		49	0		318		0	801
8:00						232		0	131		44	0		308		0	715
8:15						194		0	139		68	0		321		0	722
8:30						250		0	142		21	0		282		0	695
8:45						258		0	116		34	0		278		0	686
9:00																	0
9:15																	0
9:30																	0
9:45																	0
10:00																	0
10:15																	0
10:30																	0
10:45																	0
11:00																	0
11:15																	0
11:30																	0
11:45																	0
12:00																	0
12:15																	0
12:30																	0
12:45																	0
13:00																	0
13:15																	0
13:30																	0
13:45																	0
14:00																	0
14:15																	0
14:30																	0
14:45																	0
15:00						357		0	117		61	0		317		0	852
15:15						417		1	129		35	0		219		0	801
15:30						390		0	117		55	0		281		0	843
15:45						388		0	112		49	0		259		0	808
16:00						382		0	120		54	0		253		0	809
16:15						436		0	105		50	0		314		0	905
16:30						494		0	104		46	0		284		0	928
16:45						385		0	123		57	0		275		0	840
17:00						405		0	104		39	0		283		0	831
17:15						435		0	110		54	0		315		0	914
17:30						446		1	94		46	0		223		0	810
17:45						412		0	135		52	0		231		0	830
18:00																	0
18:15																	0
18:30																	0
18:45																	0
19:00																	0
19:15																	0
19:30																	0
19:45																	0
20:00																	0

TRAFFIC RESEARCH & ANALYSIS, INC.
Specializing in Traffic Data Collection

Traffic Research & Analysis, Inc.
3844 East Indian School Road
Phoenix, AZ 85018
(602) 840-1500

Intersection ID: 1801285
Count Date: 5/2/2018

SR LP 101 NB & US-60 / GRAND AVE

	0	3901	

	North		East		South		West		
	App	Dep	App	Dep	App	Dep	App	Dep	Total
AM	0	0	924	1549	714	0	1404	1493	3042
MID	0	0	0	0	0	0	0	0	0
PM	0	0	1719	1353	637	0	1157	2160	3513
Total	0	0	7458	8480	3901	0	7500	10379	18859

	From North (SB)				From East (WB)				From South (NB)				From West (EB)				INTSEC
	NONE				US-60 / GRAND AVE				SR LP 101 NB				US-60 / GRAND AVE				
20:15																	0
20:30																	0
20:45																	0
21:00																	0
21:15																	0
21:30																	0
21:45																	0
22:00																	0
22:15																	0
22:30																	0
22:45																	0
23:00																	0
23:15																	0
23:30																	0
23:45																	0
Total	0	0	0	0	0	7455	0	3	2924	0	977	0	0	7500	0	0	18859
AM Peak Hr:																	7:15
Pk Vol	0	0	0	0	0	924	0	0	569	0	145	0	0	1404	0	0	3042
PHF	n/a	n/a	n/a	n/a	n/a	0.822	n/a	n/a	0.708	n/a	0.740	n/a	n/a	0.787	n/a	n/a	0.949
MID Peak Hr:																	
Pk Vol																	0
PHF																	
PM Peak Hr:																	16:30
Pk Vol	0	0	0	0	0	1719	0	0	441	0	196	0	0	1157	0	0	3513
PHF	n/a	n/a	n/a	n/a	n/a	0.870	n/a	n/a	0.896	n/a	0.860	n/a	n/a	0.918	n/a	n/a	0.946

Comments

Unless shown otherwise, MID period defined as 10:00 AM - 2:00 PM. Peaks defined based on total intersection volume for all vehicle types.

TRAFFIC RESEARCH & ANALYSIS, INC.
Specializing in Traffic Data Collection

Traffic Research & Analysis, Inc.
3844 East Indian School Road
Phoenix, AZ 85018
(602) 840-1500

Intersection ID: 1801285
Count Date: 5/2/2018

SR LP 101 NB & US-60 / GRAND AVE

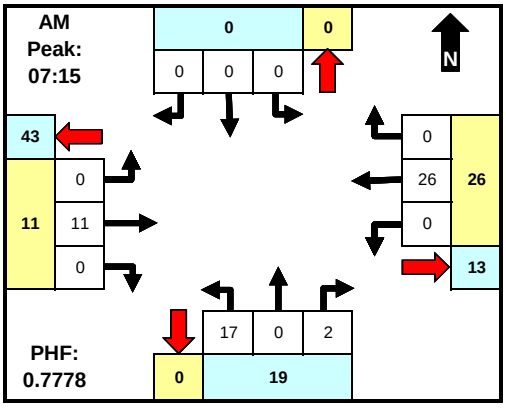

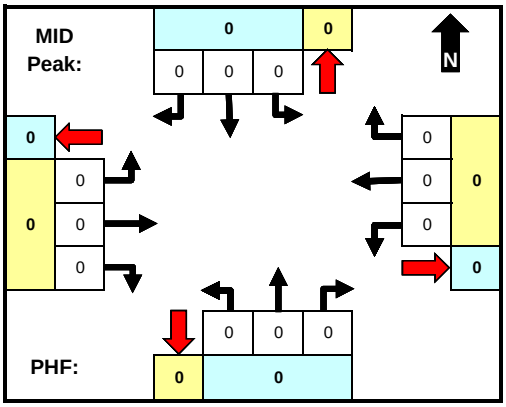

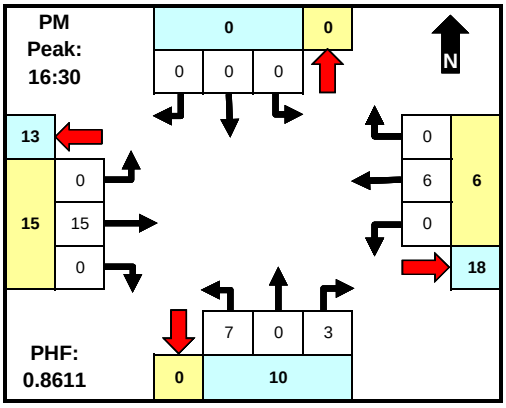

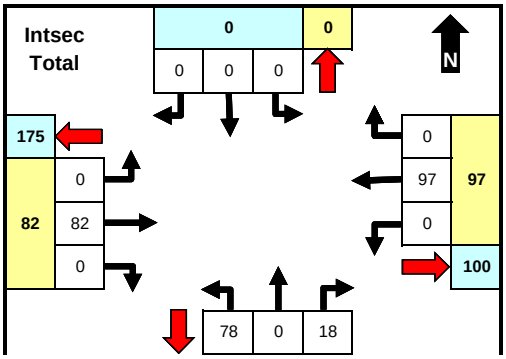

	From North (SB)				From East (WB)				From South (NB)				From West (EB)				INTSEC
	NONE				US-60 / GRAND AVE				SR LP 101 NB				US-60 / GRAND AVE				
Time	LT	Thru	RT	U	LT	Thru	RT	U	LT	Thru	RT	U	LT	Thru	RT	U	TOTAL
0:00																	0
0:15																	0
0:30																	0
0:45																	0
1:00																	0
1:15																	0
1:30																	0
1:45																	0
2:00																	0
2:15																	0
2:30																	0
2:45																	0
3:00																	0
3:15																	0
3:30																	0
3:45																	0
4:00																	0
4:15																	0
4:30																	0
4:45																	0
5:00																	0
5:15																	0
5:30																	0
5:45																	0
6:00						6		0	6		0	0		3		0	15
6:15						7		0	3		1	0		4		0	15
6:30						2		0	6		0	0		2		0	10
6:45						3		0	5		0	0		3		0	11
7:00						3		0	5		1	0		3		0	12
7:15						7		0	2		0	0		2		0	11
7:30						6		0	5		1	0		1		0	13
7:45						9		0	5		1	0		3		0	18
8:00						4		0	5		0	0		5		0	14
8:15						6		0	5		2	0		4		0	17
8:30						3		0	7		1	0		4		0	15
8:45						5		0	4		0	0		3		0	12
9:00																	0
9:15																	0
9:30																	0
9:45																	0
10:00																	0
10:15																	0
10:30																	0
10:45																	0
11:00																	0
11:15																	0
11:30																	0
11:45																	0
12:00																	0
12:15																	0
12:30																	0
12:45																	0
13:00																	0
13:15																	0
13:30																	0
13:45																	0
14:00																	0
14:15																	0
14:30																	0
14:45																	0
15:00						6		0	3		1	0		7		0	17
15:15						5		0	1		0	0		7		0	13
15:30						5		0	2		3	0		4		0	14
15:45						4		0	3		1	0		4		0	12
16:00						3		0	0		1	0		2		0	6
16:15						1		0	2		2	0		3		0	8
16:30						1		0	0		1	0		5		0	7
16:45						2		0	2		1	0		2		0	7
17:00						2		0	1		0	0		5		0	8
17:15						1		0	4		1	0		3		0	9
17:30						2		0	1		0	0		1		0	4
17:45						4		0	1		0	0		2		0	7
18:00																	0
18:15																	0
18:30																	0
18:45																	0
19:00																	0
19:15																	0
19:30																	0
19:45																	0
20:00																	0

TRAFFIC RESEARCH & ANALYSIS, INC.
Specializing in Traffic Data Collection

Traffic Research & Analysis, Inc.
3844 East Indian School Road
Phoenix, AZ 85018
(602) 840-1500

Intersection ID: 1801285
Count Date: 5/2/2018

SR LP 101 NB & US-60 / GRAND AVE

	0	96	

	North		East		South		West		
	App	Dep	App	Dep	App	Dep	App	Dep	Total
AM	0	0	26	13	19	0	11	43	56
MID	0	0	0	0	0	0	0	0	0
PM	0	0	6	18	10	0	15	13	31
Total	0	0	97	100	96	0	82	175	275

	From North (SB)				From East (WB)				From South (NB)				From West (EB)				INTSEC
	NONE				US-60 / GRAND AVE				SR LP 101 NB				US-60 / GRAND AVE				
20:15																	0
20:30																	0
20:45																	0
21:00																	0
21:15																	0
21:30																	0
21:45																	0
22:00																	0
22:15																	0
22:30																	0
22:45																	0
23:00																	0
23:15																	0
23:30																	0
23:45																	0
Total	0	0	0	0	0	97	0	0	78	0	18	0	0	82	0	0	275
AM Peak Hr:																	7:15
Pk Vol	0	0	0	0	0	26	0	0	17	0	2	0	0	11	0	0	56
PHF	n/a	n/a	n/a	n/a	n/a	0.722	n/a	n/a	0.850	n/a	0.500	n/a	n/a	0.550	n/a	n/a	0.778
MID Peak Hr:																	
Pk Vol																	0
PHF																	
PM Peak Hr:																	16:30
Pk Vol	0	0	0	0	0	6	0	0	7	0	3	0	0	15	0	0	31
PHF	n/a	n/a	n/a	n/a	n/a	0.750	n/a	n/a	0.438	n/a	0.750	n/a	n/a	0.750	n/a	n/a	0.861

Comments

Unless shown otherwise, MID period defined as 10:00 AM - 2:00 PM. Peaks defined based on total intersection volume for all vehicle types.

TRAFFIC RESEARCH & ANALYSIS, INC.
Specializing in Traffic Data Collection

Traffic Research & Analysis, Inc.
3844 East Indian School Road
Phoenix, AZ 85018
(602) 840-1500

Intersection ID: 1801285
Count Date: 5/2/2018

SR LP 101 NB & US-60 / GRAND AVE

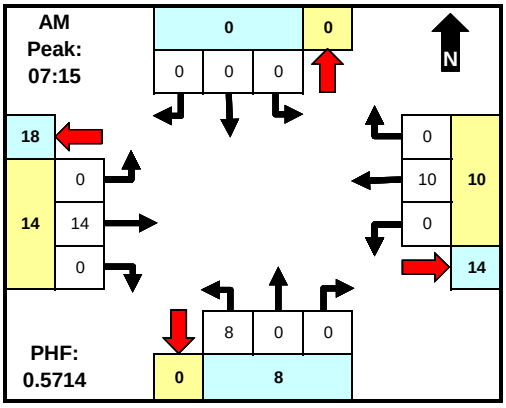

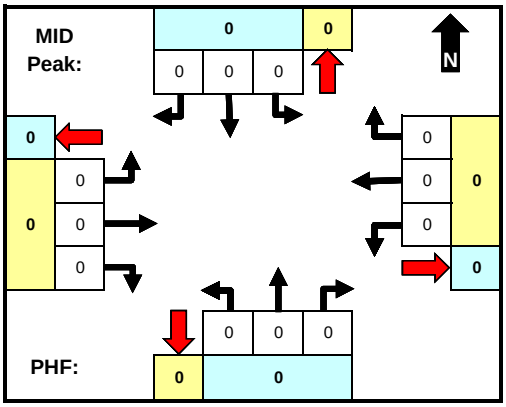

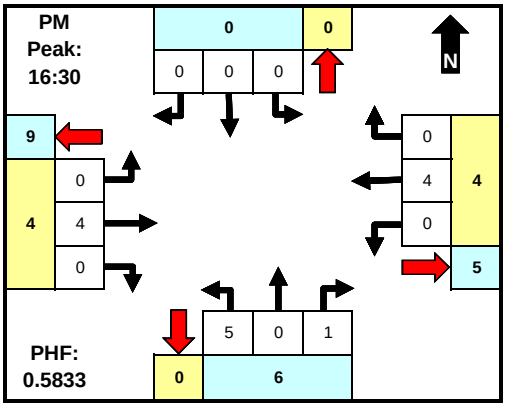

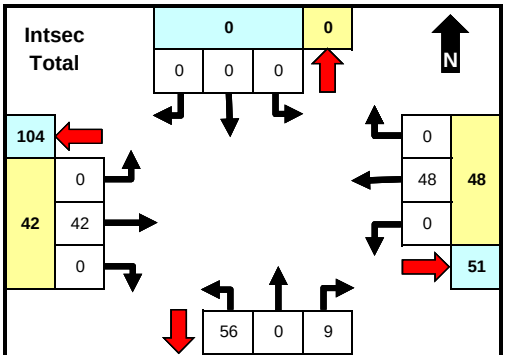

	From North (SB)				From East (WB)				From South (NB)				From West (EB)				INTSEC
	NONE				US-60 / GRAND AVE				SR LP 101 NB				US-60 / GRAND AVE				
Time	LT	Thru	RT	U	LT	Thru	RT	U	LT	Thru	RT	U	LT	Thru	RT	U	TOTAL
0:00																	0
0:15																	0
0:30																	0
0:45																	0
1:00																	0
1:15																	0
1:30																	0
1:45																	0
2:00																	0
2:15																	0
2:30																	0
2:45																	0
3:00																	0
3:15																	0
3:30																	0
3:45																	0
4:00																	0
4:15																	0
4:30																	0
4:45																	0
5:00																	0
5:15																	0
5:30																	0
5:45																	0
6:00						3		0	2		1	0		2		0	8
6:15						1		0	4		1	0		3		0	9
6:30						3		0	4		0	0		3		0	10
6:45						2		0	3		0	0		0		0	5
7:00						2		0	4		0	0		0		0	6
7:15						2		0	0		0	0		2		0	4
7:30						2		0	2		0	0		5		0	9
7:45						1		0	2		0	0		2		0	5
8:00						5		0	4		0	0		5		0	14
8:15						2		0	1		0	0		3		0	6
8:30						0		0	4		0	0		2		0	6
8:45						5		0	3		0	0		3		0	11
9:00																	0
9:15																	0
9:30																	0
9:45																	0
10:00																	0
10:15																	0
10:30																	0
10:45																	0
11:00																	0
11:15																	0
11:30																	0
11:45																	0
12:00																	0
12:15																	0
12:30																	0
12:45																	0
13:00																	0
13:15																	0
13:30																	0
13:45																	0
14:00																	0
14:15																	0
14:30																	0
14:45																	0
15:00						6		0	1		1	0		2		0	10
15:15						0		0	1		0	0		2		0	3
15:30						2		0	1		1	0		0		0	4
15:45						3		0	5		2	0		0		0	10
16:00						2		0	1		0	0		2		0	5
16:15						2		0	4		0	0		1		0	7
16:30						1		0	1		0	0		0		0	2
16:45						0		0	2		0	0		1		0	3
17:00						2		0	1		0	0		3		0	6
17:15						1		0	1		1	0		0		0	3
17:30						1		0	3		0	0		0		0	4
17:45						0		0	2		2	0		1		0	5
18:00																	0
18:15																	0
18:30																	0
18:45																	0
19:00																	0
19:15																	0
19:30																	0
19:45																	0
20:00																	0

TRAFFIC RESEARCH & ANALYSIS, INC.
Specializing in Traffic Data Collection

Traffic Research & Analysis, Inc.
3844 East Indian School Road
Phoenix, AZ 85018
(602) 840-1500

Intersection ID: 1801285
Count Date: 5/2/2018

SR LP 101 NB & US-60 / GRAND AVE

	0	65	

	North		East		South		West		
	App	Dep	App	Dep	App	Dep	App	Dep	Total
AM	0	0	10	14	8	0	14	18	32
MID	0	0	0	0	0	0	0	0	0
PM	0	0	4	5	6	0	4	9	14
Total	0	0	48	51	65	0	42	104	155

	From North (SB)				From East (WB)				From South (NB)				From West (EB)				INTSEC
	NONE				US-60 / GRAND AVE				SR LP 101 NB				US-60 / GRAND AVE				
20:15																	0
20:30																	0
20:45																	0
21:00																	0
21:15																	0
21:30																	0
21:45																	0
22:00																	0
22:15																	0
22:30																	0
22:45																	0
23:00																	0
23:15																	0
23:30																	0
23:45																	0
Total	0	0	0	0	0	48	0	0	56	0	9	0	0	42	0	0	155
AM Peak Hr:																	7:15
Pk Vol	0	0	0	0	0	10	0	0	8	0	0	0	0	14	0	0	32
PHF	n/a	n/a	n/a	n/a	n/a	0.500	n/a	n/a	0.500	n/a	n/a	n/a	n/a	0.700	n/a	n/a	0.571
MID Peak Hr:																	
Pk Vol																	0
PHF																	
PM Peak Hr:																	16:30
Pk Vol	0	0	0	0	0	4	0	0	5	0	1	0	0	4	0	0	14
PHF	n/a	n/a	n/a	n/a	n/a	0.500	n/a	n/a	0.625	n/a	0.250	n/a	n/a	0.333	n/a	n/a	0.583

Comments

Unless shown otherwise, MID period defined as 10:00 AM - 2:00 PM. Peaks defined based on total intersection volume for all vehicle types.

TRAFFIC RESEARCH & ANALYSIS, INC.
Specializing in Traffic Data Collection

Traffic Research & Analysis, Inc.
3844 East Indian School Road
Phoenix, AZ 85018
(602) 840-1500

Intersection ID: 1801286
Count Date: 5/2/2018

SR LP 101 SB & US 60/GRAND AVE

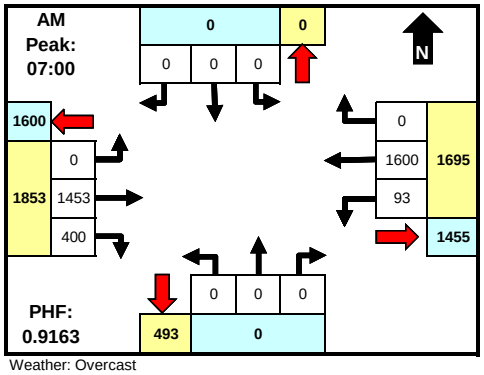

Weather: Overcast

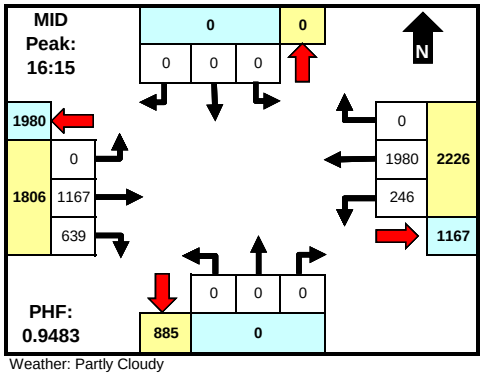

Weather: Partly Cloudy

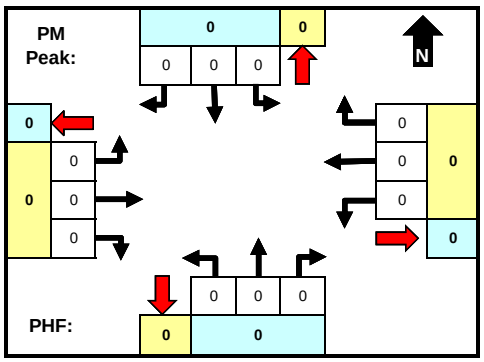

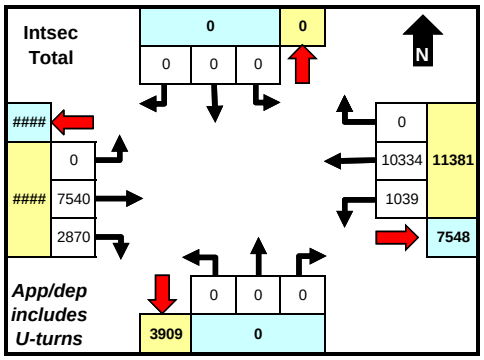

	North		East		South		West		
	App	Dep	App	Dep	App	Dep	App	Dep	Total
AM	0	0	1695	1455	0	493	1853	1600	**3548**
MID	0	0	2226	1167	0	885	1806	1980	**4032**
PM	0	0	0	0	0	0	0	0	**0**
Total	0	0	11381	7548	0	3909	10410	10334	**21791**

	From North (SB)					From East (WB)					From South (NB)					From West (EB)					INTSEC
	NONE					US 60/GRAND AVE					NONE					US 60/GRAND AVE					
Time	LT	Thru	RT	U	Cwlk	LT	Thru	RT	U	Cwlk	LT	Thru	RT	U	Cwlk	LT	Thru	RT	U	Cwlk	TOTAL
0:00																					0
0:15																					0
0:30																					0
0:45																					0
1:00																					0
1:15																					0
1:30																					0
1:45																					0
2:00																					0
2:15																					0
2:30																					0
2:45																					0
3:00																					0
3:15																					0
3:30																					0
3:45																					0
4:00																					0
4:15																					0
4:30																					0
4:45																					0
5:00																					0
5:15																					0
5:30																					0
5:45																					0
6:00						18	273		0								326	82	0		699
6:15						24	274		0								495	101	0		894
6:30						24	299		0								427	78	0		828
6:45						21	353		1								379	105	0		859
7:00						23	342		2								363	99	0		829
7:15						14	315		0								450	114	0		893
7:30						35	431		0								315	77	0		858
7:45						21	512		0								325	110	0		968
8:00						20	409		2								284	88	0		803
8:15						18	350		2								324	103	0		797
8:30						32	399		0								285	92	0		808
8:45						51	383		0								294	125	0		853
9:00																					0
9:15																					0
9:30																					0
9:45																					0
10:00																					0
10:15																					0
10:30																					0
10:45																					0
11:00																					0
11:15																					0
11:30																					0
11:45																					0
12:00																					0
12:15																					0
12:30																					0
12:45																					0
13:00																					0
13:15																					0
13:30																					0
13:45																					0
14:00																					0
14:15																					0
14:30																					0
14:45																					0
15:00						73	470		0								316	132	0		991
15:15						54	568		0								222	124	0		968
15:30						49	503		0								277	144	0		973
15:45						53	501		1								265	153	0		973
16:00						47	497		0								252	115	0		911
16:15						72	501		0								313	177	0		1063
16:30						47	554		0								298	153	0		1052
16:45						83	455		0								261	134	0		933
17:00						44	470		0								295	175	0		984
17:15						57	503		0								305	140	0		1005
17:30						97	480		0								224	142	0		943
17:45						62	492		0								245	107	0		906
18:00																					0
18:15																					0
18:30																					0
18:45																					0
19:00																					0
19:15																					0
19:30																					0
19:45																					0
20:00																					0
20:15																					0
20:30																					0
20:45																					0
21:00																					0
21:15																					0
21:30																					0
21:45																					0
22:00																					0
22:15																					0
22:30																					0
22:45																					0
Total																					

TRAFFIC RESEARCH & ANALYSIS, INC.
Specializing in Traffic Data Collection

Traffic Research & Analysis, Inc.
3844 East Indian School Road
Phoenix, AZ 85018
(602) 840-1500

Intersection ID: 1801286
Count Date: 5/2/2018

SR LP 101 SB & US 60/GRAND AVE

	From North (SB)					From East (WB)					From South (NB)					From West (EB)					INTSEC
	NONE					US 60/GRAND AVE					NONE					US 60/GRAND AVE					
23:00																					0
23:15																					0
23:30																					0
23:45																					0
Total	0	0	0	0	0	1039	####	0	8	0	0	0	0	0	0	0	7540	2870	0	0	21791
AM Peak Hr:																					7:00
Pk Vol	0	0	0	0	0	93	1600	0	2	0	0	0	0	0	0	0	1453	400	0	0	3548
PHF	n/a	n/a	n/a	n/a	n/a	0.664	0.781	n/a	0.250	n/a	n/a	n/a	n/a	n/a	n/a	n/a	0.807	0.877	n/a	n/a	0.916
MID Peak Hr:																					16:15
Pk Vol	0	0	0	0	0	246	1980	0	0	0	0	0	0	0	0	0	1167	639	0	0	4032
PHF	n/a	n/a	n/a	n/a	n/a	0.741	0.894	n/a	n/a	n/a	n/a	n/a	n/a	n/a	n/a	n/a	0.932	0.903	n/a	n/a	0.948
PM Peak Hr:																					
Pk Vol																					0
PHF																					

Comments

Unless shown otherwise, MID period defined as 10:00 AM - 2:00 PM. Peaks defined based on total intersection volume for all vehicle types. Chart totals do not include crosswalk data.

TRAFFIC RESEARCH & ANALYSIS, INC.
Specializing in Traffic Data Collection

Traffic Research & Analysis, Inc.
3844 East Indian School Road
Phoenix, AZ 85018
(602) 840-1500

Intersection ID: 1801286
Count Date: 5/2/2018

SR LP 101 SB & US 60/GRAND AVE

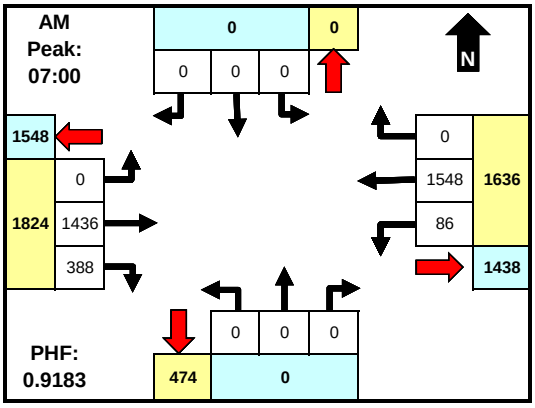

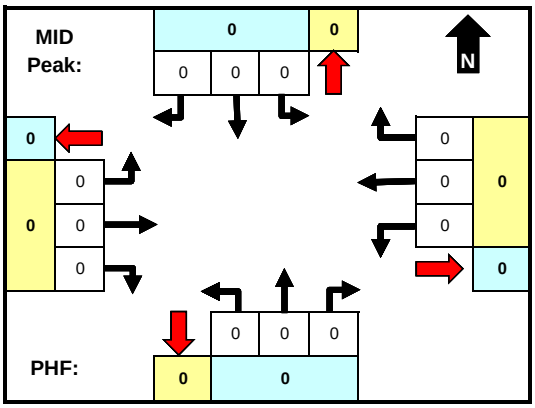

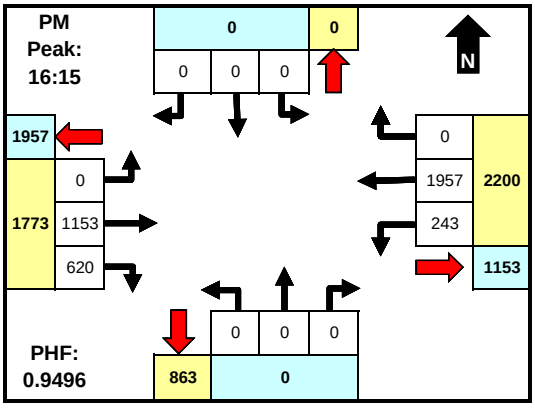

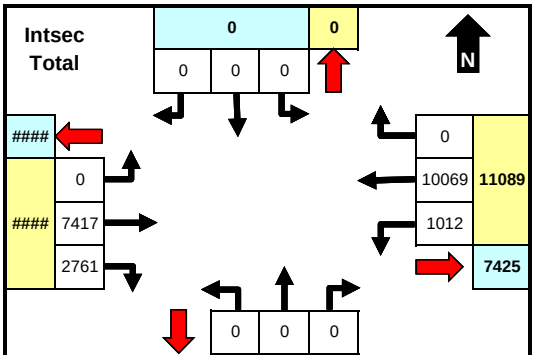

	From North (SB)				From East (WB)				From South (NB)				From West (EB)				INTSEC
	NONE				US 60/GRAND AVE				NONE				US 60/GRAND AVE				
Time	LT	Thru	RT	U	LT	Thru	RT	U	LT	Thru	RT	U	LT	Thru	RT	U	TOTAL
0:00																	0
0:15																	0
0:30																	0
0:45																	0
1:00																	0
1:15																	0
1:30																	0
1:45																	0
2:00																	0
2:15																	0
2:30																	0
2:45																	0
3:00																	0
3:15																	0
3:30																	0
3:45																	0
4:00																	0
4:15																	0
4:30																	0
4:45																	0
5:00																	0
5:15																	0
5:30																	0
5:45																	0
6:00					15	258		0						321	79	0	673
6:15					24	260		0						488	95	0	867
6:30					23	285		0						412	73	0	793
6:45					19	341		1						376	98	0	835
7:00					23	328		2						360	98	0	811
7:15					14	306		0						446	110	0	876
7:30					31	418		0						309	73	0	831
7:45					18	496		0						321	107	0	942
8:00					18	391		2						278	85	0	774
8:15					18	334		2						318	98	0	770
8:30					30	386		0						280	86	0	782
8:45					50	364		0						287	120	0	821
9:00																	0
9:15																	0
9:30																	0
9:45																	0
10:00																	0
10:15																	0
10:30																	0
10:45																	0
11:00																	0
11:15																	0
11:30																	0
11:45																	0
12:00																	0
12:15																	0
12:30																	0
12:45																	0
13:00																	0
13:15																	0
13:30																	0
13:45																	0
14:00																	0
14:15																	0
14:30																	0
14:45																	0
15:00					71	457		0						306	126	0	960
15:15					54	561		0						215	119	0	949
15:30					49	494		0						271	138	0	952
15:45					51	486		1						260	147	0	945
16:00					46	491		0						249	112	0	898
16:15					70	495		0						309	172	0	1046
16:30					47	551		0						297	147	0	1042
16:45					82	449		0						259	131	0	921
17:00					44	462		0						288	170	0	964
17:15					57	497		0						303	138	0	995
17:30					96	473		0						223	139	0	931
17:45					62	486		0						241	100	0	889
18:00																	0
18:15																	0
18:30																	0
18:45																	0
19:00																	0
19:15																	0
19:30																	0
19:45																	0
20:00																	0

TRAFFIC RESEARCH & ANALYSIS, INC.
Specializing in Traffic Data Collection

Traffic Research & Analysis, Inc.
3844 East Indian School Road
Phoenix, AZ 85018
(602) 840-1500

Intersection ID: 1801286
Count Date: 5/2/2018

SR LP 101 SB & US 60/GRAND AVE

	3773	0

	North		East		South		West		
	App	Dep	App	Dep	App	Dep	App	Dep	Total
AM	0	0	1636	1438	0	474	1824	1548	3460
MID	0	0	0	0	0	0	0	0	0
PM	0	0	2200	1153	0	863	1773	1957	3973
Total	0	0	11089	7425	0	3773	10178	10069	21267

	From North (SB)				From East (WB)				From South (NB)				From West (EB)				INTSEC
	NONE				US 60/GRAND AVE				NONE				US 60/GRAND AVE				
20:15																	0
20:30																	0
20:45																	0
21:00																	0
21:15																	0
21:30																	0
21:45																	0
22:00																	0
22:15																	0
22:30																	0
22:45																	0
23:00																	0
23:15																	0
23:30																	0
23:45																	0
Total	0	0	0	0	1012	####	0	8	0	0	0	0	0	7417	2761	0	21267
AM Peak Hr:																	7:00
Pk Vol	0	0	0	0	86	1548	0	2	0	0	0	0	0	1436	388	0	3460
PHF	n/a	n/a	n/a	n/a	0.694	0.780	n/a	0.250	n/a	n/a	n/a	n/a	n/a	0.805	0.882	n/a	0.918
MID Peak Hr:																	
Pk Vol																	0
PHF																	
PM Peak Hr:																	16:15
Pk Vol	0	0	0	0	243	1957	0	0	0	0	0	0	0	1153	620	0	3973
PHF	n/a	n/a	n/a	n/a	0.741	0.888	n/a	n/a	n/a	n/a	n/a	n/a	n/a	0.933	0.901	n/a	0.950

Comments

Unless shown otherwise, MID period defined as 10:00 AM - 2:00 PM. Peaks defined based on total intersection volume for all vehicle types.

TRAFFIC RESEARCH & ANALYSIS, INC.
Specializing in Traffic Data Collection

Traffic Research & Analysis, Inc.
3844 East Indian School Road
Phoenix, AZ 85018
(602) 840-1500

Intersection ID: 1801286
Count Date: 5/2/2018

SR LP 101 SB & US 60/GRAND AVE

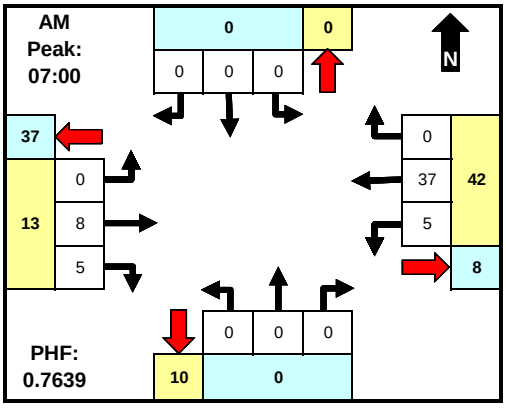

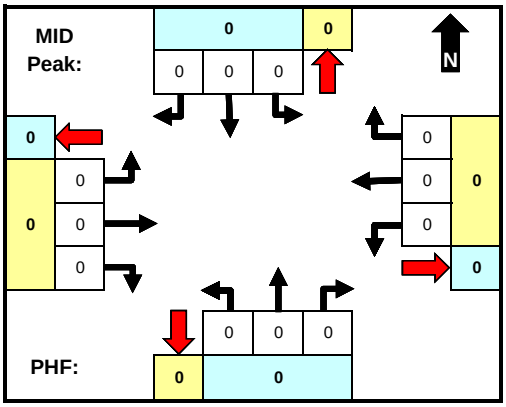

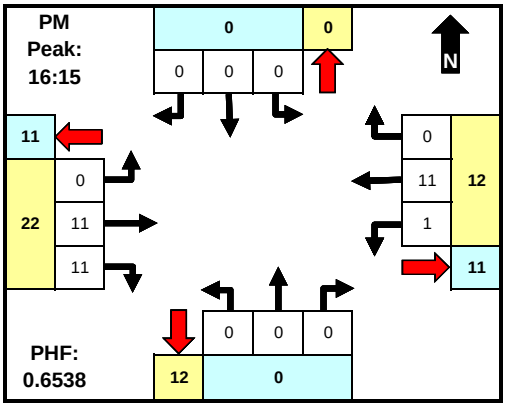

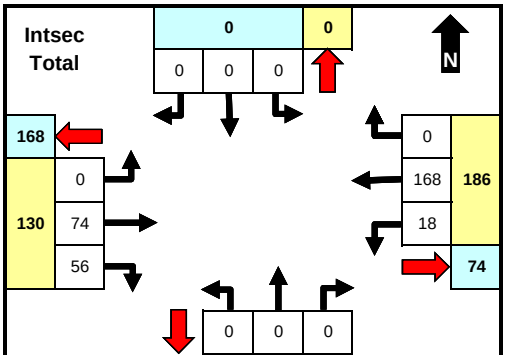

	From North (SB)				From East (WB)				From South (NB)				From West (EB)				INTSEC
	NONE				US 60/GRAND AVE				NONE				US 60/GRAND AVE				
Time	LT	Thru	RT	U	LT	Thru	RT	U	LT	Thru	RT	U	LT	Thru	RT	U	TOTAL
0:00																	0
0:15																	0
0:30																	0
0:45																	0
1:00																	0
1:15																	0
1:30																	0
1:45																	0
2:00																	0
2:15																	0
2:30																	0
2:45																	0
3:00																	0
3:15																	0
3:30																	0
3:45																	0
4:00																	0
4:15																	0
4:30																	0
4:45																	0
5:00																	0
5:15																	0
5:30																	0
5:45																	0
6:00					3	10		0						3	0	0	16
6:15					0	9		0						4	4	0	17
6:30					1	8		0						2	1	0	12
6:45					0	8		0						3	2	0	13
7:00					0	8		0						2	0	0	10
7:15					0	7		0						2	1	0	10
7:30					3	10		0						2	2	0	17
7:45					2	12		0						2	2	0	18
8:00					2	10		0						3	1	0	16
8:15					0	14		0						3	2	0	19
8:30					1	8		0						3	4	0	16
8:45					0	13		0						4	2	0	19
9:00																	0
9:15																	0
9:30																	0
9:45																	0
10:00																	0
10:15																	0
10:30																	0
10:45																	0
11:00																	0
11:15																	0
11:30																	0
11:45																	0
12:00																	0
12:15																	0
12:30																	0
12:45																	0
13:00																	0
13:15																	0
13:30																	0
13:45																	0
14:00																	0
14:15																	0
14:30																	0
14:45																	0
15:00					2	7		0						7	3	0	19
15:15					0	6		0						6	4	0	16
15:30					0	6		0						6	6	0	18
15:45					2	7		0						4	6	0	19
16:00					1	3		0						1	2	0	7
16:15					0	2		0						4	3	0	9
16:30					0	1		0						1	4	0	6
16:45					1	3		0						1	1	0	6
17:00					0	5		0						5	3	0	13
17:15					0	4		0						2	0	0	6
17:30					0	3		0						1	1	0	5
17:45					0	4		0						3	2	0	9
18:00																	0
18:15																	0
18:30																	0
18:45																	0
19:00																	0
19:15																	0
19:30																	0
19:45																	0
20:00																	0

TRAFFIC RESEARCH & ANALYSIS, INC.
Specializing in Traffic Data Collection

Traffic Research & Analysis, Inc.
3844 East Indian School Road
Phoenix, AZ 85018
(602) 840-1500

Intersection ID: 1801286
Count Date: 5/2/2018

SR LP 101 SB & US 60/GRAND AVE

	74	0	

	North		East		South		West		
	App	Dep	App	Dep	App	Dep	App	Dep	Total
AM	0	0	42	8	0	10	13	37	55
MID	0	0	0	0	0	0	0	0	0
PM	0	0	12	11	0	12	22	11	34
Total	0	0	186	74	0	74	130	168	316

	From North (SB)				From East (WB)				From South (NB)				From West (EB)				INTSEC
	NONE				US 60/GRAND AVE				NONE				US 60/GRAND AVE				
20:15																	0
20:30																	0
20:45																	0
21:00																	0
21:15																	0
21:30																	0
21:45																	0
22:00																	0
22:15																	0
22:30																	0
22:45																	0
23:00																	0
23:15																	0
23:30																	0
23:45																	0
Total	0	0	0	0	18	168	0	0	0	0	0	0	0	74	56	0	316
AM Peak Hr:																	7:00
Pk Vol	0	0	0	0	5	37	0	0	0	0	0	0	0	8	5	0	55
PHF	n/a	n/a	n/a	n/a	0.417	0.771	n/a	n/a	n/a	n/a	n/a	n/a	n/a	1.000	0.625	n/a	0.764
MID Peak Hr:																	
Pk Vol																	0
PHF																	
PM Peak Hr:																	16:15
Pk Vol	0	0	0	0	1	11	0	0	0	0	0	0	0	11	11	0	34
PHF	n/a	n/a	n/a	n/a	0.250	0.550	n/a	n/a	n/a	n/a	n/a	n/a	n/a	0.550	0.688	n/a	0.654

Comments

Unless shown otherwise, MID period defined as 10:00 AM - 2:00 PM. Peaks defined based on total intersection volume for all vehicle types.

TRAFFIC RESEARCH & ANALYSIS, INC.
Specializing in Traffic Data Collection

Traffic Research & Analysis, Inc.
3844 East Indian School Road
Phoenix, AZ 85018
(602) 840-1500

Intersection ID: 1801286
Count Date: 5/2/2018

SR LP 101 SB & US 60/GRAND AVE

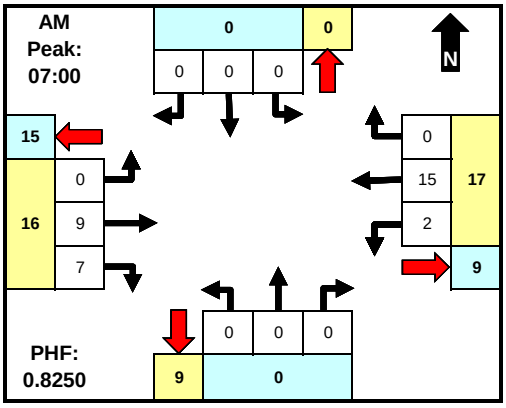

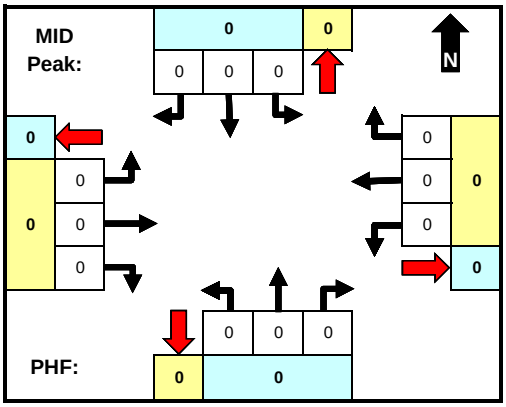

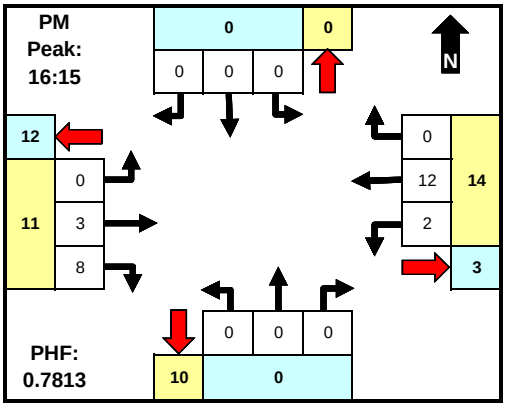

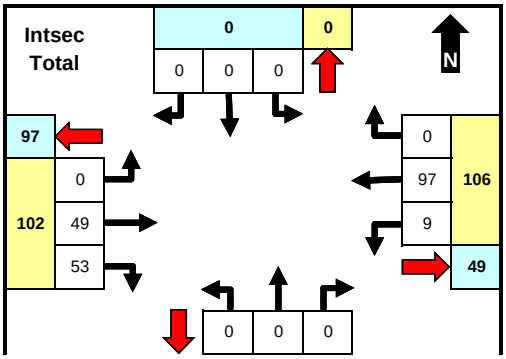

	From North (SB)				From East (WB)				From South (NB)				From West (EB)				INTSEC
	NONE				US 60/GRAND AVE				NONE				US 60/GRAND AVE				
Time	LT	Thru	RT	U	LT	Thru	RT	U	LT	Thru	RT	U	LT	Thru	RT	U	TOTAL
0:00																	0
0:15																	0
0:30																	0
0:45																	0
1:00																	0
1:15																	0
1:30																	0
1:45																	0
2:00																	0
2:15																	0
2:30																	0
2:45																	0
3:00																	0
3:15																	0
3:30																	0
3:45																	0
4:00																	0
4:15																	0
4:30																	0
4:45																	0
5:00																	0
5:15																	0
5:30																	0
5:45																	0
6:00					0	5		0						2	3	0	10
6:15					0	5		0						3	2	0	10
6:30					0	6		0						13	4	0	23
6:45					2	4		0						0	5	0	11
7:00					0	6		0						1	1	0	8
7:15					0	2		0						2	3	0	7
7:30					1	3		0						4	2	0	10
7:45					1	4		0						2	1	0	8
8:00					0	8		0						3	2	0	13
8:15					0	2		0						3	3	0	8
8:30					1	5		0						2	2	0	10
8:45					1	6		0						3	3	0	13
9:00																	0
9:15																	0
9:30																	0
9:45																	0
10:00																	0
10:15																	0
10:30																	0
10:45																	0
11:00																	0
11:15																	0
11:30																	0
11:45																	0
12:00																	0
12:15																	0
12:30																	0
12:45																	0
13:00																	0
13:15																	0
13:30																	0
13:45																	0
14:00																	0
14:15																	0
14:30																	0
14:45																	0
15:00					0	6		0						3	3	0	12
15:15					0	1		0						1	1	0	3
15:30					0	3		0						0	0	0	3
15:45					0	8		0						1	0	0	9
16:00					0	3		0						2	1	0	6
16:15					2	4		0						0	2	0	8
16:30					0	2		0						0	2	0	4
16:45					0	3		0						1	2	0	6
17:00					0	3		0						2	2	0	7
17:15					0	2		0						0	2	0	4
17:30					1	4		0						0	2	0	7
17:45					0	2		0						1	5	0	8
18:00																	0
18:15																	0
18:30																	0
18:45																	0
19:00																	0
19:15																	0
19:30																	0
19:45																	0
20:00																	0

TRAFFIC RESEARCH & ANALYSIS, INC.
Specializing in Traffic Data Collection

Traffic Research & Analysis, Inc.
3844 East Indian School Road
Phoenix, AZ 85018
(602) 840-1500

Intersection ID: 1801286
Count Date: 5/2/2018

SR LP 101 SB & US 60/GRAND AVE

	62	0	

	North		East		South		West		
	App	Dep	App	Dep	App	Dep	App	Dep	Total
AM	0	0	17	9	0	9	16	15	33
MID	0	0	0	0	0	0	0	0	0
PM	0	0	14	3	0	10	11	12	25
Total	0	0	106	49	0	62	102	97	208

	From North (SB)				From East (WB)				From South (NB)				From West (EB)				INTSEC
	NONE				US 60/GRAND AVE				NONE				US 60/GRAND AVE				
20:15																	0
20:30																	0
20:45																	0
21:00																	0
21:15																	0
21:30																	0
21:45																	0
22:00																	0
22:15																	0
22:30																	0
22:45																	0
23:00																	0
23:15																	0
23:30																	0
23:45																	0
Total	0	0	0	0	9	97	0	0	0	0	0	0	0	49	53	0	208
AM Peak Hr:																	7:00
Pk Vol	0	0	0	0	2	15	0	0	0	0	0	0	0	9	7	0	33
PHF	n/a	n/a	n/a	n/a	0.500	0.625	n/a	n/a	n/a	n/a	n/a	n/a	n/a	0.563	0.583	n/a	0.825
MID Peak Hr:																	
Pk Vol																	0
PHF																	
PM Peak Hr:																	16:15
Pk Vol	0	0	0	0	2	12	0	0	0	0	0	0	0	3	8	0	25
PHF	n/a	n/a	n/a	n/a	0.250	0.750	n/a	n/a	n/a	n/a	n/a	n/a	n/a	0.375	1.000	n/a	0.781

Comments

Unless shown otherwise, MID period defined as 10:00 AM - 2:00 PM. Peaks defined based on total intersection volume for all vehicle types.

TRAFFIC RESEARCH & ANALYSIS, INC.
Specializing in Traffic Data Collection

Traffic Research & Analysis, Inc.
3844 East Indian School Road
Phoenix, AZ 85018
(602) 840-1500

Intersection ID: 1801288
Count Date: 2/5/2018

N 103RD AVE & US 60/GRAND AVE

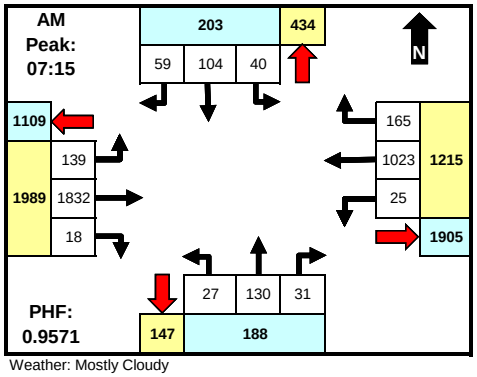

Weather: Mostly Cloudy

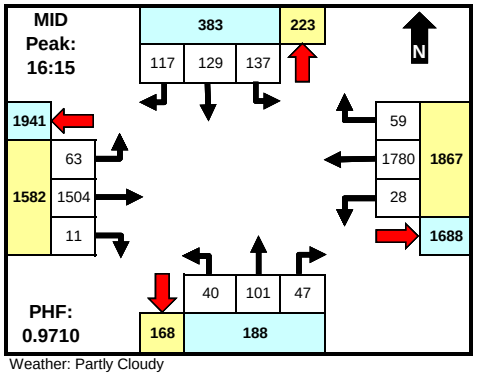

Weather: Partly Cloudy

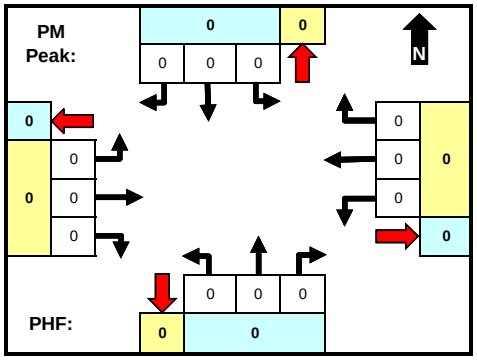

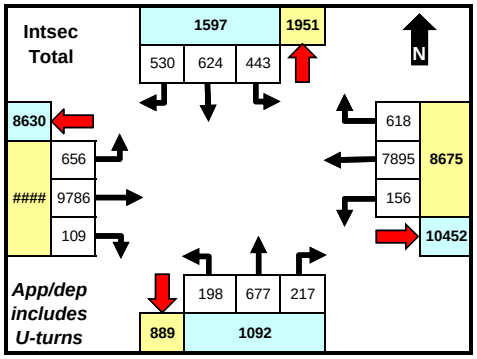

	North		East		South		West		
	App	Dep	App	Dep	App	Dep	App	Dep	Total
AM	203	434	1215	1905	188	147	1989	1109	3595
MID	383	223	1867	1688	188	168	1582	1941	4020
PM	0	0	0	0	0	0	0	0	0
Total	1597	1951	8675	10452	1092	889	10558	8630	21922

	From North (SB)					From East (WB)					From South (NB)					From West (EB)					INTSEC
	N 103RD AVE					US 60/GRAND AVE					N 103RD AVE					US 60/GRAND AVE					
Time	LT	Thru	RT	U	Cwlk	LT	Thru	RT	U	Cwlk	LT	Thru	RT	U	Cwlk	LT	Thru	RT	U	Cwlk	TOTAL
0:00																					0
0:15																					0
0:30																					0
0:45																					0
1:00																					0
1:15																					0
1:30																					0
1:45																					0
2:00																					0
2:15																					0
2:30																					0
2:45																					0
3:00																					0
3:15																					0
3:30																					0
3:45																					0
4:00																					0
4:15																					0
4:30																					0
4:45																					0
5:00																					0
5:15																					0
5:30																					0
5:45																					0
6:00	7	15	6	0		3	174	20	0		6	13	7	0		21	436	4	0		712
6:15	14	12	9	0		2	169	24	0		3	11	7	0		44	554	6	1		856
6:30	20	16	15	0		4	226	34	0		7	18	6	0		22	477	0	0		845
6:45	13	13	10	0		3	254	46	0		6	26	4	0		25	517	6	0		923
7:00	9	11	15	0		2	242	29	0		2	31	7	0		26	448	1	0		823
7:15	5	23	10	0		1	237	35	0		6	17	6	0		36	531	4	0		911
7:30	12	26	15	0		8	255	40	0		10	36	5	0		40	456	4	0		907
7:45	9	28	13	0		9	286	48	1		5	38	5	0		40	451	6	0		939
8:00	14	27	21	0		7	245	42	1		6	39	15	0		23	394	4	0		838
8:15	5	32	20	0		5	263	38	1		6	39	5	0		28	401	1	0		844
8:30	12	27	18	0		8	248	20	0		10	52	11	0		40	418	7	0		871
8:45	9	39	22	0		10	297	29	1		13	47	6	0		45	383	10	0		911
9:00																					0
9:15																					0
9:30																					0
9:45																					0
10:00																					0
10:15																					0
10:30																					0
10:45																					0
11:00																					0
11:15																					0
11:30																					0
11:45																					0
12:00																					0
12:15																					0
12:30																					0
12:45																					0
13:00																					0
13:15																					0
13:30																					0
13:45																					0
14:00																					0
14:15																					0
14:30																					0
14:45																					0
15:00	25	27	43	0		4	340	22	1		13	28	6	0		35	392	9	0		945
15:15	24	27	37	0		6	422	16	0		8	32	12	0		34	349	4	0		971
15:30	31	42	43	0		10	366	28	0		12	25	14	0		31	347	7	0		956
15:45	18	31	32	0		6	431	21	0		9	29	10	0		28	374	8	0		997
16:00	34	38	26	0		12	389	13	0		7	20	12	0		25	353	4	0		933
16:15	28	30	37	0		2	489	15	0		5	16	12	0		8	356	1	1		1000
16:30	45	46	35	0		8	424	10	0		7	34	10	0		24	385	7	0		1035
16:45	23	21	22	0		6	453	16	0		12	22	15	0		17	402	2	2		1013
17:00	41	32	23	0		12	414	18	0		16	29	10	0		14	361	1	1		972
17:15	20	18	28	0		7	390	10	0		10	19	12	0		18	364	4	2		902
17:30	15	17	9	0		10	393	19	1		10	32	9	0		13	329	2	0		859
17:45	10	26	21	0		11	488	25	0		9	24	11	0		19	308	7	0		959
18:00																					0
18:15																					0
18:30																					0
18:45																					0
19:00																					0
19:15																					0
19:30																					0
19:45																					0
20:00																					0
20:15																					0
20:30																					0
20:45																					0
21:00																					0
21:15																					0
21:30																					0
21:45																					0
22:00																					0
22:15																					0
22:30																					0
22:45																					0
Total																					

TRAFFIC RESEARCH & ANALYSIS, INC.
Specializing in Traffic Data Collection

Traffic Research & Analysis, Inc.
3844 East Indian School Road
Phoenix, AZ 85018
(602) 840-1500

Intersection ID: 1801288
Count Date: 2/5/2018

N 103RD AVE & US 60/GRAND AVE

	From North (SB)					From East (WB)					From South (NB)					From West (EB)					INTSEC
	N 103RD AVE					US 60/GRAND AVE					N 103RD AVE					US 60/GRAND AVE					
23:00																					0
23:15																					0
23:30																					0
23:45																					0
Total	443	624	530	0	0	156	7895	618	6	0	198	677	217	0	0	656	9786	109	7	0	21922
AM Peak Hr:																					7:15
Pk Vol	40	104	59	0	0	25	1023	165	2	0	27	130	31	0	0	139	1832	18	0	0	3595
PHF	0.714	0.929	0.702	n/a	n/a	0.694	0.894	0.859	0.500	n/a	0.675	0.833	0.517	n/a	n/a	0.869	0.863	0.750	n/a	n/a	0.957
MID Peak Hr:																					16:15
Pk Vol	137	129	117	0	0	28	1780	59	0	0	40	101	47	0	0	63	1504	11	4	0	4020
PHF	0.761	0.701	0.791	n/a	n/a	0.583	0.910	0.819	n/a	n/a	0.625	0.743	0.783	n/a	n/a	0.656	0.935	0.393	0.500	n/a	0.971
PM Peak Hr:																					
Pk Vol																					0
PHF																					

Comments

Unless shown otherwise, MID period defined as 10:00 AM - 2:00 PM. Peaks defined based on total intersection volume for all vehicle types. Chart totals do not include crosswalk data.

TRAFFIC RESEARCH & ANALYSIS, INC.
Specializing in Traffic Data Collection

Traffic Research & Analysis, Inc.
3844 East Indian School Road
Phoenix, AZ 85018
(602) 840-1500

Intersection ID: 1801288
Count Date: 2/5/2018

N 103RD AVE & US 60/GRAND AVE

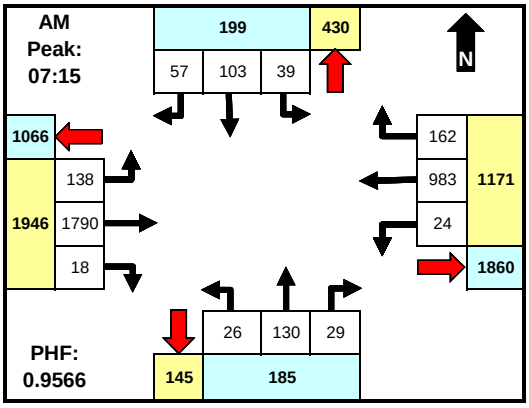

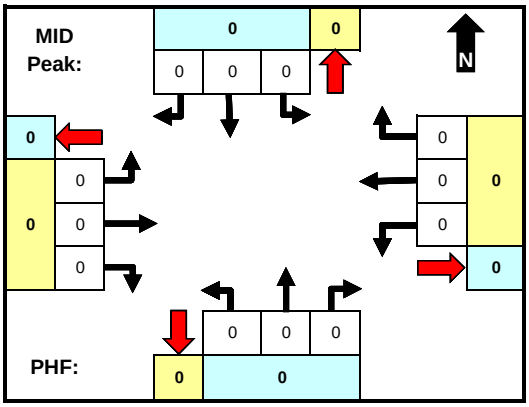

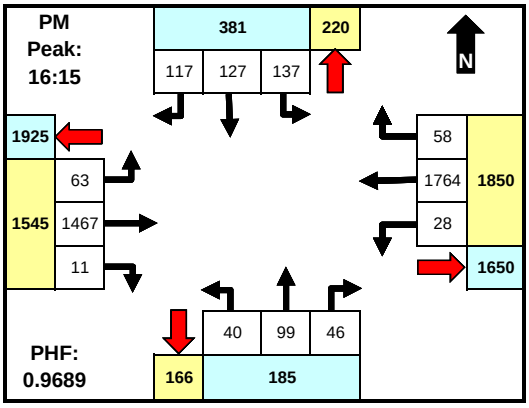

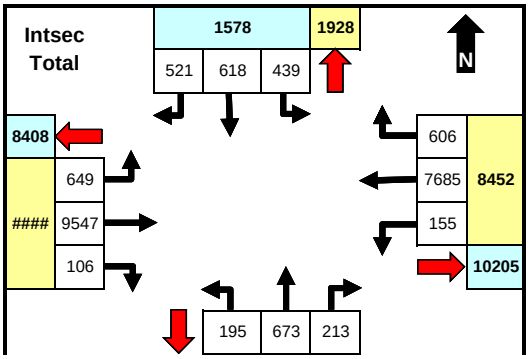

	From North (SB)				From East (WB)				From South (NB)				From West (EB)				INTSEC
	N 103RD AVE				US 60/GRAND AVE				N 103RD AVE				US 60/GRAND AVE				
Time	LT	Thru	RT	U	LT	Thru	RT	U	LT	Thru	RT	U	LT	Thru	RT	U	TOTAL
0:00																	0
0:15																	0
0:30																	0
0:45																	0
1:00																	0
1:15																	0
1:30																	0
1:45																	0
2:00																	0
2:15																	0
2:30																	0
2:45																	0
3:00																	0
3:15																	0
3:30																	0
3:45																	0
4:00																	0
4:15																	0
4:30																	0
4:45																	0
5:00																	0
5:15																	0
5:30																	0
5:45																	0
06:00	7	15	5	0	3	165	20	0	6	12	7	0	21	422	4	0	687
06:15	14	12	9	0	2	155	24	0	3	11	7	0	43	545	5	1	831
06:30	20	16	15	0	4	214	34	0	7	18	5	0	21	464	0	0	818
06:45	13	13	10	0	3	243	45	0	6	26	4	0	25	508	5	0	901
07:00	8	11	14	0	2	230	29	0	2	31	7	0	26	444	1	0	805
07:15	5	23	10	0	1	230	35	0	6	17	5	0	36	520	4	0	892
07:30	12	25	15	0	8	245	39	0	10	36	5	0	40	446	4	0	885
07:45	8	28	12	0	8	277	48	1	4	38	5	0	39	441	6	0	915
08:00	14	27	20	0	7	231	40	1	6	39	14	0	23	383	4	0	809
08:15	5	32	20	0	5	250	36	1	6	38	5	0	28	394	1	0	821
08:30	12	27	17	0	8	238	19	0	10	52	11	0	39	407	7	0	847
08:45	8	39	22	0	10	283	27	1	13	47	6	0	45	370	9	0	880
9:00																	0
9:15																	0
9:30																	0
9:45																	0
10:00																	0
10:15																	0
10:30																	0
10:45																	0
11:00																	0
11:15																	0
11:30																	0
11:45																	0
12:00																	0
12:15																	0
12:30																	0
12:45																	0
13:00																	0
13:15																	0
13:30																	0
13:45																	0
14:00																	0
14:15																	0
14:30																	0
14:45																	0
15:00	25	27	40	0	4	330	21	1	12	28	6	0	34	374	9	0	911
15:15	24	27	36	0	6	416	16	0	8	32	12	0	34	336	4	0	951
15:30	30	41	43	0	10	355	27	0	12	25	14	0	31	334	7	0	929
15:45	18	31	32	0	6	417	21	0	9	29	10	0	27	364	8	0	972
16:00	34	37	26	0	12	387	13	0	7	20	12	0	25	346	4	0	923
16:15	28	29	37	0	2	484	15	0	5	16	12	0	8	345	1	1	983
16:30	45	45	35	0	8	420	10	0	7	34	10	0	24	377	7	0	1022
16:45	23	21	22	0	6	451	15	0	12	21	15	0	17	394	2	2	1001
17:00	41	32	23	0	12	409	18	0	16	28	9	0	14	351	1	1	955
17:15	20	18	28	0	7	389	10	0	10	19	12	0	17	358	4	2	894
17:30	15	16	9	0	10	386	19	1	9	32	9	0	13	326	2	0	847
17:45	10	26	21	0	11	480	25	0	9	24	11	0	19	298	7	0	941
18:00																	0
18:15																	0
18:30																	0
18:45																	0
19:00																	0
19:15																	0
19:30																	0
19:45																	0
20:00																	0

TRAFFIC RESEARCH & ANALYSIS, INC.
Specializing in Traffic Data Collection

Traffic Research & Analysis, Inc.
3844 East Indian School Road
Phoenix, AZ 85018
(602) 840-1500

Intersection ID: 1801288
Count Date: 2/5/2018

N 103RD AVE & US 60/GRAND AVE

	879	1081

	North		East		South		West		
	App	Dep	App	Dep	App	Dep	App	Dep	Total
AM	199	430	1171	1860	185	145	1946	1066	3501
MID	0	0	0	0	0	0	0	0	0
PM	381	220	1850	1650	185	166	1545	1925	3961
Total	1578	1928	8452	10205	1081	879	10309	8408	21420

	From North (SB)				From East (WB)				From South (NB)				From West (EB)				INTSEC
	N 103RD AVE				US 60/GRAND AVE				N 103RD AVE				US 60/GRAND AVE				
20:15																	0
20:30																	0
20:45																	0
21:00																	0
21:15																	0
21:30																	0
21:45																	0
22:00																	0
22:15																	0
22:30																	0
22:45																	0
23:00																	0
23:15																	0
23:30																	0
23:45																	0
Total	439	618	521	0	155	7685	606	6	195	673	213	0	649	9547	106	7	21420
AM Peak Hr:																	7:15
Pk Vol	39	103	57	0	24	983	162	2	26	130	29	0	138	1790	18	0	3501
PHF	0.696	0.920	0.713	n/a	0.750	0.887	0.844	0.500	0.650	0.833	0.518	n/a	0.863	0.861	0.750	n/a	0.957
MID Peak Hr:																	
Pk Vol																	0
PHF																	
PM Peak Hr:																	16:15
Pk Vol	137	127	117	0	28	1764	58	0	40	99	46	0	63	1467	11	4	3961
PHF	0.761	0.706	0.791	n/a	0.583	0.911	0.806	n/a	0.625	0.728	0.767	n/a	0.656	0.931	0.393	0.500	0.969

Comments

Unless shown otherwise, MID period defined as 10:00 AM - 2:00 PM. Peaks defined based on total intersection volume for all vehicle types.

TRAFFIC RESEARCH & ANALYSIS, INC.
Specializing in Traffic Data Collection

Traffic Research & Analysis, Inc.
3844 East Indian School Road
Phoenix, AZ 85018
(602) 840-1500

Intersection ID: 1801288
Count Date: 2/5/2018

N 103RD AVE & US 60/GRAND AVE

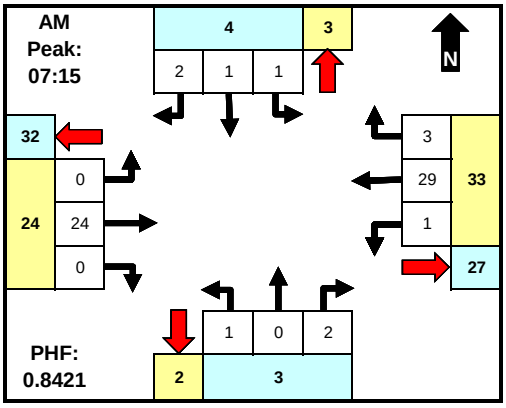

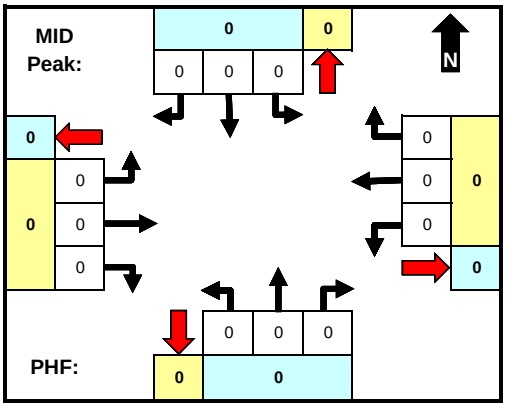

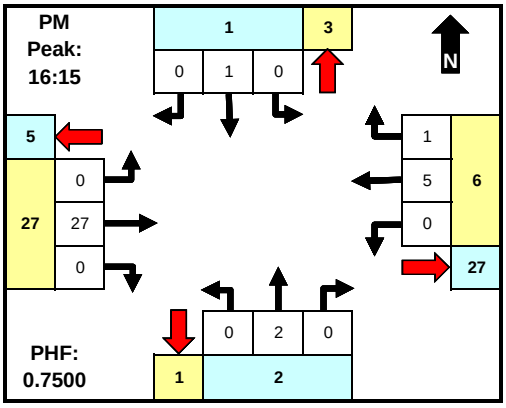

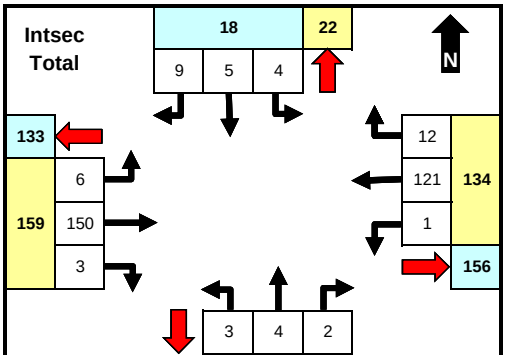

	From North (SB)				From East (WB)				From South (NB)				From West (EB)				INTSEC
	N 103RD AVE				US 60/GRAND AVE				N 103RD AVE				US 60/GRAND AVE				
Time	LT	Thru	RT	U	LT	Thru	RT	U	LT	Thru	RT	U	LT	Thru	RT	U	TOTAL
0:00																	0
0:15																	0
0:30																	0
0:45																	0
1:00																	0
1:15																	0
1:30																	0
1:45																	0
2:00																	0
2:15																	0
2:30																	0
2:45																	0
3:00																	0
3:15																	0
3:30																	0
3:45																	0
4:00																	0
4:15																	0
4:30																	0
4:45																	0
5:00																	0
5:15																	0
5:30																	0
5:45																	0
06:00	0	0	1	0	0	7	0	0	0	1	0	0	0	4	0	0	13
06:15	0	0	0	0	0	9	0	0	0	0	0	0	1	5	1	0	16
06:30	0	0	0	0	0	6	0	0	0	0	0	0	1	5	0	0	12
06:45	0	0	0	0	0	8	1	0	0	0	0	0	0	4	1	0	14
07:00	1	0	1	0	0	6	0	0	0	0	0	0	0	3	0	0	11
07:15	0	0	0	0	0	5	0	0	0	0	1	0	0	4	0	0	10
07:30	0	1	0	0	0	8	1	0	0	0	0	0	0	7	0	0	17
07:45	1	0	1	0	1	8	0	0	1	0	0	0	0	6	0	0	18
08:00	0	0	1	0	0	8	2	0	0	0	1	0	0	7	0	0	19
08:15	0	0	0	0	0	8	2	0	0	1	0	0	0	3	0	0	14
08:30	0	0	1	0	0	7	1	0	0	0	0	0	1	6	0	0	16
08:45	1	0	0	0	0	7	2	0	0	0	0	0	0	8	1	0	19
9:00																	0
9:15																	0
9:30																	0
9:45																	0
10:00																	0
10:15																	0
10:30																	0
10:45																	0
11:00																	0
11:15																	0
11:30																	0
11:45																	0
12:00																	0
12:15																	0
12:30																	0
12:45																	0
13:00																	0
13:15																	0
13:30																	0
13:45																	0
14:00																	0
14:15																	0
14:30																	0
14:45																	0
15:00	0	0	3	0	0	2	1	0	1	0	0	0	1	13	0	0	21
15:15	0	0	1	0	0	4	0	0	0	0	0	0	0	13	0	0	18
15:30	1	1	0	0	0	8	1	0	0	0	0	0	0	13	0	0	24
15:45	0	0	0	0	0	6	0	0	0	0	0	0	1	9	0	0	16
16:00	0	1	0	0	0	1	0	0	0	0	0	0	0	5	0	0	7
16:15	0	0	0	0	0	2	0	0	0	0	0	0	0	10	0	0	12
16:30	0	1	0	0	0	1	0	0	0	0	0	0	0	6	0	0	8
16:45	0	0	0	0	0	0	1	0	0	1	0	0	0	5	0	0	7
17:00	0	0	0	0	0	2	0	0	0	1	0	0	0	6	0	0	9
17:15	0	0	0	0	0	1	0	0	0	0	0	0	1	3	0	0	5
17:30	0	1	0	0	0	3	0	0	1	0	0	0	0	1	0	0	6
17:45	0	0	0	0	0	4	0	0	0	0	0	0	0	4	0	0	8
18:00																	0
18:15																	0
18:30																	0
18:45																	0
19:00																	0
19:15																	0
19:30																	0
19:45																	0
20:00																	0

TRAFFIC RESEARCH & ANALYSIS, INC.
Specializing in Traffic Data Collection

Traffic Research & Analysis, Inc.
3844 East Indian School Road
Phoenix, AZ 85018
(602) 840-1500

Intersection ID: 1801288
Count Date: 2/5/2018

N 103RD AVE & US 60/GRAND AVE

	9	9	

	North		East		South		West		
	App	Dep	App	Dep	App	Dep	App	Dep	Total
AM	4	3	33	27	3	2	24	32	64
MID	0	0	0	0	0	0	0	0	0
PM	1	3	6	27	2	1	27	5	36
Total	18	22	134	156	9	9	159	133	320

	From North (SB)				From East (WB)				From South (NB)				From West (EB)				INTSEC
	N 103RD AVE				US 60/GRAND AVE				N 103RD AVE				US 60/GRAND AVE				
20:15																	0
20:30																	0
20:45																	0
21:00																	0
21:15																	0
21:30																	0
21:45																	0
22:00																	0
22:15																	0
22:30																	0
22:45																	0
23:00																	0
23:15																	0
23:30																	0
23:45																	0
Total	4	5	9	0	1	121	12	0	3	4	2	0	6	150	3	0	320
AM Peak Hr:																	7:15
Pk Vol	1	1	2	0	1	29	3	0	1	0	2	0	0	24	0	0	64
PHF	0.250	0.250	0.500	n/a	0.250	0.906	0.375	n/a	0.250	n/a	0.500	n/a	n/a	0.857	n/a	n/a	0.842
MID Peak Hr:																	
Pk Vol																	0
PHF																	
PM Peak Hr:																	16:15
Pk Vol	0	1	0	0	0	5	1	0	0	2	0	0	0	27	0	0	36
PHF	n/a	0.250	n/a	n/a	n/a	0.625	0.250	n/a	n/a	0.500	n/a	n/a	n/a	0.675	n/a	n/a	0.750

Comments

Unless shown otherwise, MID period defined as 10:00 AM - 2:00 PM. Peaks defined based on total intersection volume for all vehicle types.

TRAFFIC RESEARCH & ANALYSIS, INC.
Specializing in Traffic Data Collection

Traffic Research & Analysis, Inc.
3844 East Indian School Road
Phoenix, AZ 85018
(602) 840-1500

Intersection ID: 1801288
Count Date: 2/5/2018

N 103RD AVE & US 60/GRAND AVE

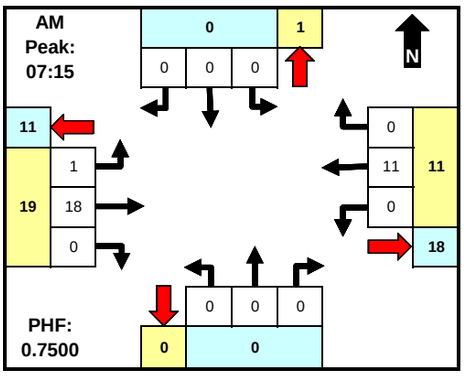

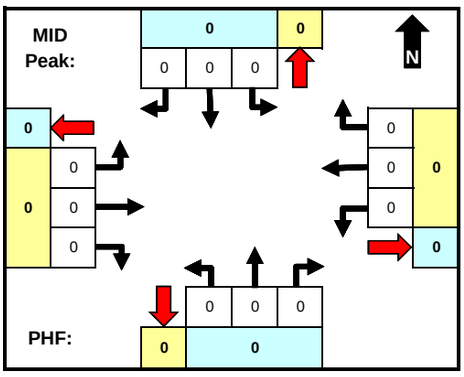

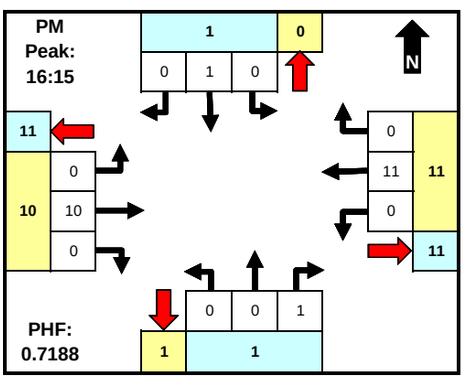

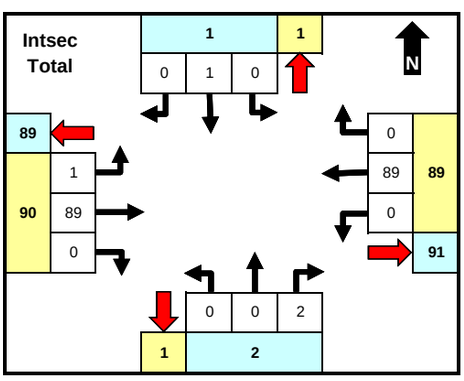

	North		East		South		West		
	App	Dep	App	Dep	App	Dep	App	Dep	Total
AM	0	1	11	18	0	0	19	11	30
MID	0	0	0	0	0	0	0	0	0
PM	1	0	11	11	1	1	10	11	23
Total	1	1	89	91	2	1	90	89	182

	From North (SB)				From East (WB)				From South (NB)				From West (EB)				INTSEC
	N 103RD AVE				US 60/GRAND AVE				N 103RD AVE				US 60/GRAND AVE				
Time	LT	Thru	RT	U	LT	Thru	RT	U	LT	Thru	RT	U	LT	Thru	RT	U	TOTAL
0:00																	0
0:15																	0
0:30																	0
0:45																	0
1:00																	0
1:15																	0
1:30																	0
1:45																	0
2:00																	0
2:15																	0
2:30																	0
2:45																	0
3:00																	0
3:15																	0
3:30																	0
3:45																	0
4:00																	0
4:15																	0
4:30																	0
4:45																	0
5:00																	0
5:15																	0
5:30																	0
5:45																	0
06:00	0	0	0	0	0	2	0	0	0	0	0	0	0	10	0	0	12
06:15	0	0	0	0	0	5	0	0	0	0	0	0	0	4	0	0	9
06:30	0	0	0	0	0	6	0	0	0	0	1	0	0	8	0	0	15
06:45	0	0	0	0	0	3	0	0	0	0	0	0	0	5	0	0	8
07:00	0	0	0	0	0	6	0	0	0	0	0	0	0	1	0	0	7
07:15	0	0	0	0	0	2	0	0	0	0	0	0	0	7	0	0	9
07:30	0	0	0	0	0	2	0	0	0	0	0	0	0	3	0	0	5
07:45	0	0	0	0	0	1	0	0	0	0	0	0	1	4	0	0	6
08:00	0	0	0	0	0	6	0	0	0	0	0	0	0	4	0	0	10
08:15	0	0	0	0	0	5	0	0	0	0	0	0	0	4	0	0	9
08:30	0	0	0	0	0	3	0	0	0	0	0	0	0	5	0	0	8
08:45	0	0	0	0	0	7	0	0	0	0	0	0	0	5	0	0	12
9:00																	0
9:15																	0
9:30																	0
9:45																	0
10:00																	0
10:15																	0
10:30																	0
10:45																	0
11:00																	0
11:15																	0
11:30																	0
11:45																	0
12:00																	0
12:15																	0
12:30																	0
12:45																	0
13:00																	0
13:15																	0
13:30																	0
13:45																	0
14:00																	0
14:15																	0
14:30																	0
14:45																	0
15:00	0	0	0	0	0	8	0	0	0	0	0	0	0	5	0	0	13
15:15	0	0	0	0	0	2	0	0	0	0	0	0	0	0	0	0	2
15:30	0	0	0	0	0	3	0	0	0	0	0	0	0	0	0	0	3
15:45	0	0	0	0	0	8	0	0	0	0	0	0	0	1	0	0	9
16:00	0	0	0	0	0	1	0	0	0	0	0	0	0	2	0	0	3
16:15	0	1	0	0	0	3	0	0	0	0	0	0	0	1	0	0	5
16:30	0	0	0	0	0	3	0	0	0	0	0	0	0	2	0	0	5
16:45	0	0	0	0	0	2	0	0	0	0	0	0	0	3	0	0	5
17:00	0	0	0	0	0	3	0	0	0	0	1	0	0	4	0	0	8
17:15	0	0	0	0	0	0	0	0	0	0	0	0	0	3	0	0	3
17:30	0	0	0	0	0	4	0	0	0	0	0	0	0	2	0	0	6
17:45	0	0	0	0	0	4	0	0	0	0	0	0	0	6	0	0	10
18:00																	0
18:15																	0
18:30																	0
18:45																	0
19:00																	0
19:15																	0
19:30																	0
19:45																	0
20:00																	0
20:15																	0
20:30																	0
20:45																	0
21:00																	0
21:15																	0
21:30																	0
21:45																	0
22:00																	0
22:15																	0
22:30																	0
22:45																	0
23:00																	0
23:15																	0
23:30																	0
23:45																	0
Total	0	1	0	0	0	89	0	0	0	0	2	0	1	89	0	0	182
AM Peak Hr:																	7:15
Pk Vol	0	0	0	0	0	11	0	0	0	0	0	0	1	18	0	0	30
PHF	n/a	n/a	n/a	n/a	n/a	0.458	n/a	n/a	n/a	n/a	n/a	n/a	0.250	0.643	n/a	n/a	0.750
MID Peak Hr:																	
Pk Vol																	0
PHF																	
PM Peak Hr:																	16:15
Pk Vol	0	1	0	0	0	11	0	0	0	0	1	0	0	10	0	0	23
PHF	n/a	0.250	n/a	n/a	n/a	0.917	n/a	n/a	n/a	n/a	0.250	n/a	n/a	0.625	n/a	n/a	0.719

Comments

Unless shown otherwise, MID period defined as 10:00 AM - 2:00 PM. Peaks defined based on total intersection volume for all vehicle types.

TRAFFIC RESEARCH & ANALYSIS, INC.
Specializing in Traffic Data Collection

Traffic Research & Analysis, Inc.
3844 East Indian School Road
Phoenix, AZ 85018
(602) 840-1500

Intersection ID: 1801289
Count Date: 2/5/2018

N 107TH AVE & US 60/GRAND AVE

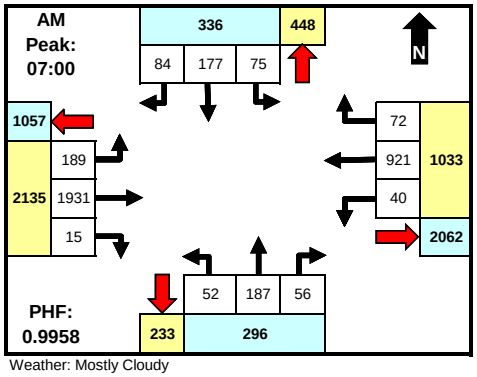

Weather: Mostly Cloudy

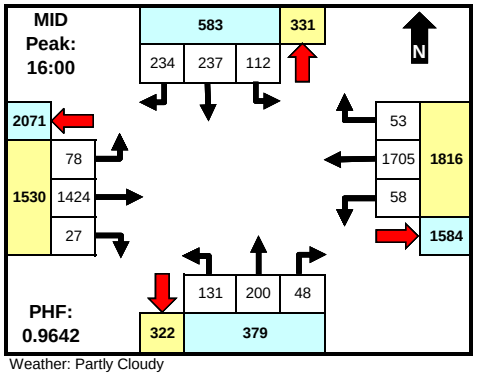

Weather: Partly Cloudy

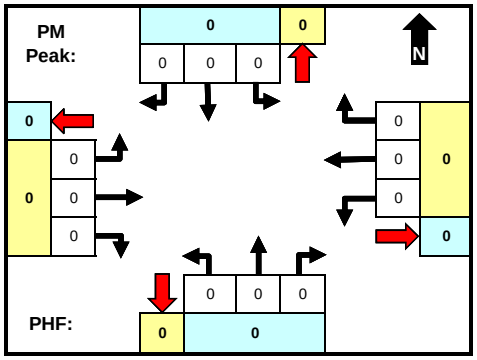

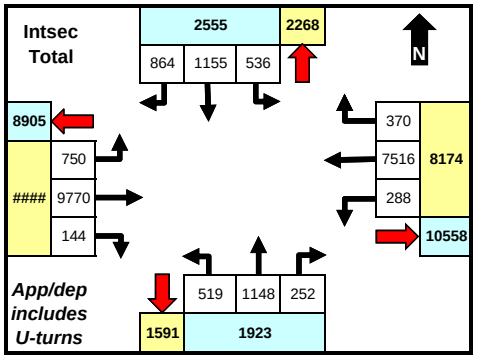

	North		East		South		West		
	App	Dep	App	Dep	App	Dep	App	Dep	Total
AM	336	448	1033	2062	296	233	2135	1057	**3800**
MID	583	331	1816	1584	379	322	1530	2071	**4308**
PM	0	0	0	0	0	0	0	0	**0**
Total	2555	2268	8174	10558	1923	1591	10670	8905	**23322**

	From North (SB)					From East (WB)					From South (NB)					From West (EB)					INTSEC
	N 107TH AVE					US 60/GRAND AVE					N 107TH AVE					US 60/GRAND AVE					
Time	LT	Thru	RT	U	Cwlk	LT	Thru	RT	U	Cwlk	LT	Thru	RT	U	Cwlk	LT	Thru	RT	U	Cwlk	TOTAL
0:00																					0
0:15																					0
0:30																					0
0:45																					0
1:00																					0
1:15																					0
1:30																					0
1:45																					0
2:00																					0
2:15																					0
2:30																					0
2:45																					0
3:00																					0
3:15																					0
3:30																					0
3:45																					0
4:00																					0
4:15																					0
4:30																					0
4:45																					0
5:00																					0
5:15																					0
5:30																					0
5:45																					0
6:00	15	29	6	0		6	151	9	0		4	25	4	0		23	483	6	0		**761**
6:15	8	29	10	0		10	163	10	0		4	38	7	0		21	522	1	1		**824**
6:30	15	19	7	0		7	204	13	0		7	31	6	0		40	545	2	0		**896**
6:45	18	34	10	0		8	222	16	0		11	42	3	0		42	510	2	0		**918**
7:00	18	36	16	0		7	242	17	0		9	36	11	0		42	509	1	0		**944**
7:15	15	49	17	0		9	214	13	0		10	47	14	0		38	523	5	0		**954**
7:30	21	35	22	0		14	237	25	0		15	55	13	1		51	459	4	0		**952**
7:45	21	57	29	0		10	228	17	0		18	49	18	0		58	440	5	0		**950**
8:00	18	49	23	0		11	255	24	0		15	50	9	0		32	415	2	1		**904**
8:15	17	50	21	0		12	253	17	0		10	43	11	0		41	423	8	2		**908**
8:30	27	54	31	0		10	258	22	0		23	56	10	0		48	412	6	0		**957**
8:45	27	67	31	0		11	252	16	0		16	52	17	0		34	373	6	0		**902**
9:00																					0
9:15																					0
9:30																					0
9:45																					0
10:00																					0
10:15																					0
10:30																					0
10:45																					0
11:00																					0
11:15																					0
11:30																					0
11:45																					0
12:00																					0
12:15																					0
12:30																					0
12:45																					0
13:00																					0
13:15																					0
13:30																					0
13:45																					0
14:00																					0
14:15																					0
14:30																					0
14:45																					0
15:00	33	66	51	0		18	350	18	0		24	60	9	0		33	390	10	0		**1062**
15:15	22	59	55	0		19	370	18	0		33	61	10	1		36	337	14	0		**1035**
15:30	28	63	58	0		22	417	13	0		27	66	14	0		26	346	8	0		**1088**
15:45	17	65	42	0		14	428	18	0		24	57	13	1		17	348	11	0		**1055**
16:00	30	81	51	0		13	411	9	0		36	51	13	0		18	344	11	0		**1068**
16:15	21	53	55	0		20	421	12	0		30	45	12	0		20	367	4	0		**1060**
16:30	33	56	64	0		13	456	17	0		37	52	10	0		20	350	8	1		**1117**
16:45	28	47	64	0		12	417	15	0		28	52	13	0		20	363	4	0		**1063**
17:00	38	40	60	0		10	399	17	0		38	43	2	0		22	356	8	0		**1033**
17:15	31	51	60	0		11	398	13	0		36	60	8	0		15	331	4	1		**1019**
17:30	18	33	40	0		7	372	10	0		31	34	12	1		27	350	7	0		**942**
17:45	17	33	41	0		14	398	11	0		33	43	13	0		26	274	7	0		**910**
18:00																					0
18:15																					0
18:30																					0
18:45																					0
19:00																					0
19:15																					0
19:30																					0
19:45																					0
20:00																					0
20:15																					0
20:30																					0
20:45																					0
21:00																					0
21:15																					0
21:30																					0
21:45																					0
22:00																					0
22:15																					0
22:30																					0
22:45																					0
Total																					

TRAFFIC RESEARCH & ANALYSIS, INC.
Specializing in Traffic Data Collection

Traffic Research & Analysis, Inc.
3844 East Indian School Road
Phoenix, AZ 85018
(602) 840-1500

Intersection ID: 1801289
Count Date: 2/5/2018

N 107TH AVE & US 60/GRAND AVE

	From North (SB)					From East (WB)					From South (NB)					From West (EB)					INTSEC
	N 107TH AVE					US 60/GRAND AVE					N 107TH AVE					US 60/GRAND AVE					
23:00																					0
23:15																					0
23:30																					0
23:45																					0
Total	536	1155	864	0	0	288	7516	370	0	0	519	1148	252	4	0	750	9770	144	6	0	23322
AM Peak Hr:																					7:00
Pk Vol	75	177	84	0	0	40	921	72	0	0	52	187	56	1	0	189	1931	15	0	0	3800
PHF	0.893	0.776	0.724	n/a	n/a	0.714	0.951	0.720	n/a	n/a	0.722	0.850	0.778	0.250	n/a	0.815	0.923	0.750	n/a	n/a	0.996
MID Peak Hr:																					16:00
Pk Vol	112	237	234	0	0	58	1705	53	0	0	131	200	48	0	0	78	1424	27	1	0	4308
PHF	0.848	0.731	0.914	n/a	n/a	0.725	0.935	0.779	n/a	n/a	0.885	0.962	0.923	n/a	n/a	0.975	0.970	0.614	0.250	n/a	0.964
PM Peak Hr:																					
Pk Vol																					0
PHF																					

Comments

Unless shown otherwise, MID period defined as 10:00 AM - 2:00 PM. Peaks defined based on total intersection volume for all vehicle types. Chart totals do not include crosswalk data.

TRAFFIC RESEARCH & ANALYSIS, INC.
Specializing in Traffic Data Collection

Traffic Research & Analysis, Inc.
3844 East Indian School Road
Phoenix, AZ 85018
(602) 840-1500

Intersection ID: 1801289
Count Date: 2/5/2018

N 107TH AVE & US 60/GRAND AVE

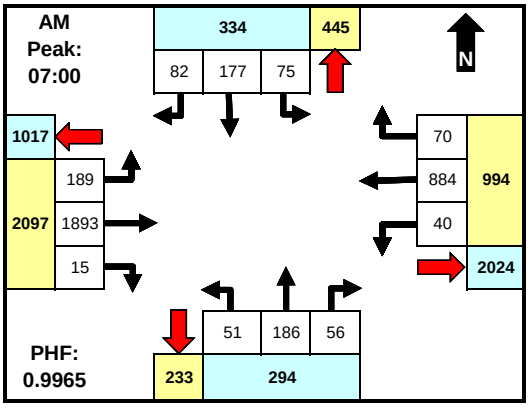

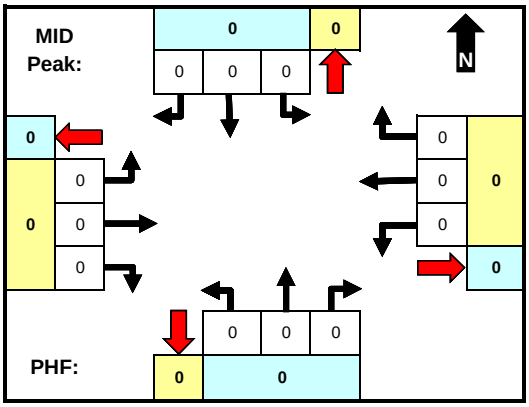

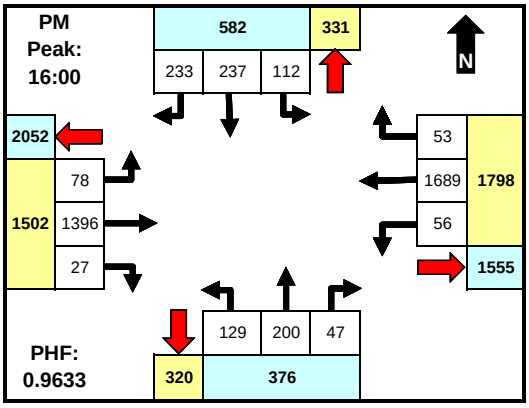

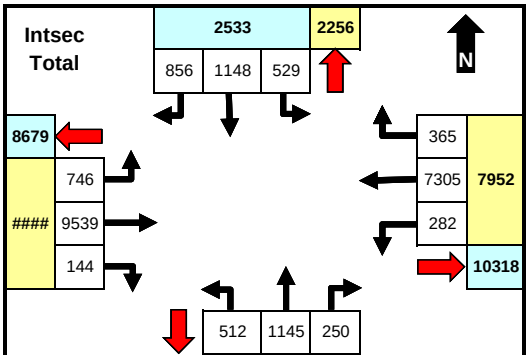

	From North (SB)				From East (WB)				From South (NB)				From West (EB)				INTSEC
	N 107TH AVE				US 60/GRAND AVE				N 107TH AVE				US 60/GRAND AVE				
Time	LT	Thru	RT	U	LT	Thru	RT	U	LT	Thru	RT	U	LT	Thru	RT	U	TOTAL
0:00																	0
0:15																	0
0:30																	0
0:45																	0
1:00																	0
1:15																	0
1:30																	0
1:45																	0
2:00																	0
2:15																	0
2:30																	0
2:45																	0
3:00																	0
3:15																	0
3:30																	0
3:45																	0
4:00																	0
4:15																	0
4:30																	0
4:45																	0
5:00																	0
5:15																	0
5:30																	0
5:45																	0
06:00	15	29	6	0	6	142	9	0	4	25	4	0	23	466	6	0	735
06:15	8	28	9	0	10	151	10	0	3	37	7	0	21	513	1	1	799
06:30	15	17	7	0	6	191	12	0	7	31	6	0	40	532	2	0	866
06:45	18	34	10	0	8	211	16	0	9	42	2	0	42	502	2	0	896
07:00	18	36	16	0	7	228	17	0	8	36	11	0	42	505	1	0	925
07:15	15	49	16	0	9	207	13	0	10	46	14	0	38	510	5	0	932
07:30	21	35	22	0	14	229	23	0	15	55	13	1	51	450	4	0	933
07:45	21	57	28	0	10	220	17	0	18	49	18	0	58	428	5	0	929
08:00	18	49	23	0	11	236	24	0	15	50	9	0	31	406	2	1	875
08:15	17	48	20	0	12	243	17	0	10	43	11	0	40	415	8	2	886
08:30	27	54	31	0	9	247	22	0	23	56	10	0	48	400	6	0	933
08:45	26	67	30	0	10	241	15	0	16	51	17	0	33	362	6	0	874
9:00																	0
9:15																	0
9:30																	0
9:45																	0
10:00																	0
10:15																	0
10:30																	0
10:45																	0
11:00																	0
11:15																	0
11:30																	0
11:45																	0
12:00																	0
12:15																	0
12:30																	0
12:45																	0
13:00																	0
13:15																	0
13:30																	0
13:45																	0
14:00																	0
14:15																	0
14:30																	0
14:45																	0
15:00	31	66	50	0	18	338	17	0	24	60	9	0	33	373	10	0	1029
15:15	20	58	54	0	19	364	18	0	33	61	10	1	35	322	14	0	1009
15:30	27	63	58	0	22	408	13	0	27	66	14	0	26	334	8	0	1066
15:45	17	65	42	0	14	413	18	0	24	57	13	1	17	340	11	0	1032
16:00	30	81	50	0	13	406	9	0	35	51	13	0	18	338	11	0	1055
16:15	21	53	55	0	18	417	12	0	30	45	12	0	20	357	4	0	1044
16:30	33	56	64	0	13	451	17	0	37	52	10	0	20	343	8	1	1105
16:45	28	47	64	0	12	415	15	0	27	52	12	0	20	358	4	0	1054
17:00	37	40	60	0	10	396	17	0	38	43	2	0	22	347	8	0	1020
17:15	31	50	60	0	11	395	13	0	36	60	8	0	15	326	4	1	1010
17:30	18	33	40	0	6	365	10	0	30	34	12	1	27	347	7	0	930
17:45	17	33	41	0	14	391	11	0	33	43	13	0	26	265	7	0	894
18:00																	0
18:15																	0
18:30																	0
18:45																	0
19:00																	0
19:15																	0
19:30																	0
19:45																	0
20:00																	0

TRAFFIC RESEARCH & ANALYSIS, INC.
Specializing in Traffic Data Collection

Traffic Research & Analysis, Inc.
3844 East Indian School Road
Phoenix, AZ 85018
(602) 840-1500

Intersection ID: 1801289
Count Date: 2/5/2018

N 107TH AVE & US 60/GRAND AVE

	1578	1911

	North		East		South		West		Total
	App	Dep	App	Dep	App	Dep	App	Dep	
AM	334	445	994	2024	294	233	2097	1017	3719
MID	0	0	0	0	0	0	0	0	0
PM	582	331	1798	1555	376	320	1502	2052	4258
Total	2533	2256	7952	10318	1911	1578	10435	8679	22831

	From North (SB)				From East (WB)				From South (NB)				From West (EB)				INTSEC
	N 107TH AVE				US 60/GRAND AVE				N 107TH AVE				US 60/GRAND AVE				
20:15																	0
20:30																	0
20:45																	0
21:00																	0
21:15																	0
21:30																	0
21:45																	0
22:00																	0
22:15																	0
22:30																	0
22:45																	0
23:00																	0
23:15																	0
23:30																	0
23:45																	0
Total	529	1148	856	0	282	7305	365	0	512	1145	250	4	746	9539	144	6	22831
AM Peak Hr:																	7:00
Pk Vol	75	177	82	0	40	884	70	0	51	186	56	1	189	1893	15	0	3719
PHF	0.893	0.776	0.732	n/a	0.714	0.965	0.761	n/a	0.708	0.845	0.778	0.250	0.815	0.928	0.750	n/a	0.997
MID Peak Hr:																	
Pk Vol																	0
PHF																	
PM Peak Hr:																	16:00
Pk Vol	112	237	233	0	56	1689	53	0	129	200	47	0	78	1396	27	1	4258
PHF	0.848	0.731	0.910	n/a	0.778	0.936	0.779	n/a	0.872	0.962	0.904	n/a	0.975	0.975	0.614	0.250	0.963

Comments

Unless shown otherwise, MID period defined as 10:00 AM - 2:00 PM. Peaks defined based on total intersection volume for all vehicle types.

TRAFFIC RESEARCH & ANALYSIS, INC.
Specializing in Traffic Data Collection

Traffic Research & Analysis, Inc.
3844 East Indian School Road
Phoenix, AZ 85018
(602) 840-1500

Intersection ID: 1801289
Count Date: 2/5/2018

N 107TH AVE & US 60/GRAND AVE

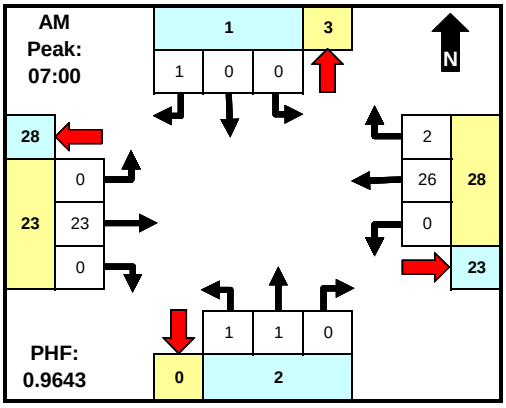

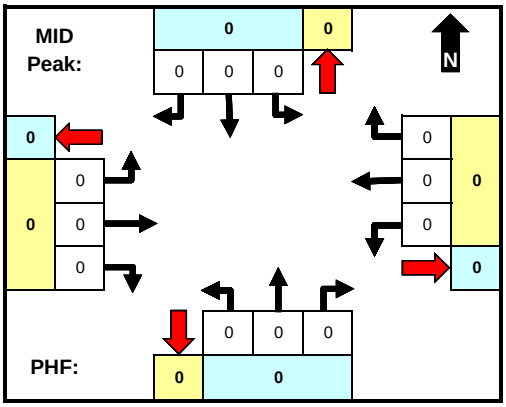

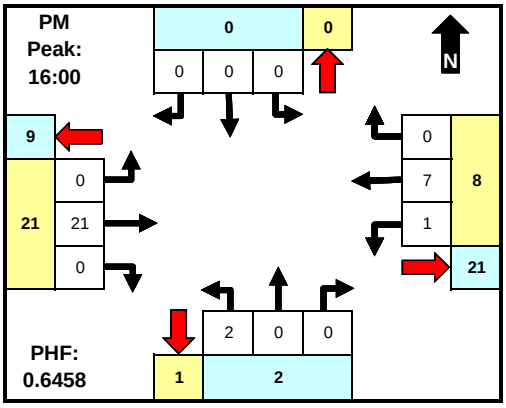

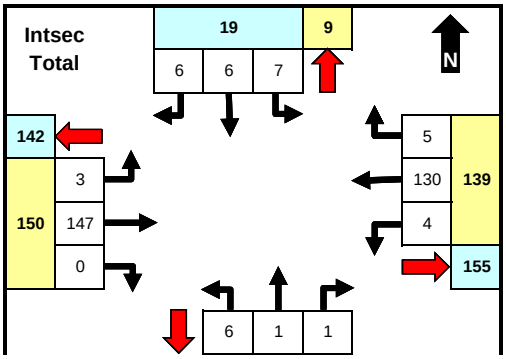

	From North (SB)				From East (WB)				From South (NB)				From West (EB)				INTSEC
	N 107TH AVE				US 60/GRAND AVE				N 107TH AVE				US 60/GRAND AVE				
Time	LT	Thru	RT	U	LT	Thru	RT	U	LT	Thru	RT	U	LT	Thru	RT	U	TOTAL
0:00																	0
0:15																	0
0:30																	0
0:45																	0
1:00																	0
1:15																	0
1:30																	0
1:45																	0
2:00																	0
2:15																	0
2:30																	0
2:45																	0
3:00																	0
3:15																	0
3:30																	0
3:45																	0
4:00																	0
4:15																	0
4:30																	0
4:45																	0
5:00																	0
5:15																	0
5:30																	0
5:45																	0
06:00	0	0	0	0	0	8	0	0	0	0	0	0	0	6	0	0	14
06:15	0	1	1	0	0	7	0	0	1	0	0	0	0	6	0	0	16
06:30	0	2	0	0	1	9	1	0	0	0	0	0	0	8	0	0	21
06:45	0	0	0	0	0	8	0	0	1	0	1	0	0	5	0	0	15
07:00	0	0	0	0	0	8	0	0	1	0	0	0	0	4	0	0	13
07:15	0	0	1	0	0	5	0	0	0	1	0	0	0	7	0	0	14
07:30	0	0	0	0	0	6	2	0	0	0	0	0	0	6	0	0	14
07:45	0	0	0	0	0	7	0	0	0	0	0	0	0	6	0	0	13
08:00	0	0	0	0	0	13	0	0	0	0	0	0	1	6	0	0	20
08:15	0	1	1	0	0	7	0	0	0	0	0	0	0	4	0	0	13
08:30	0	0	0	0	1	7	0	0	0	0	0	0	0	5	0	0	13
08:45	1	0	1	0	1	5	1	0	0	0	0	0	1	7	0	0	17
9:00																	0
9:15																	0
9:30																	0
9:45																	0
10:00																	0
10:15																	0
10:30																	0
10:45																	0
11:00																	0
11:15																	0
11:30																	0
11:45																	0
12:00																	0
12:15																	0
12:30																	0
12:45																	0
13:00																	0
13:15																	0
13:30																	0
13:45																	0
14:00																	0
14:15																	0
14:30																	0
14:45																	0
15:00	2	0	1	0	0	5	1	0	0	0	0	0	0	12	0	0	21
15:15	2	1	1	0	0	4	0	0	0	0	0	0	1	14	0	0	23
15:30	1	0	0	0	0	7	0	0	0	0	0	0	0	12	0	0	20
15:45	0	0	0	0	0	6	0	0	0	0	0	0	0	6	0	0	12
16:00	0	0	0	0	0	3	0	0	1	0	0	0	0	4	0	0	8
16:15	0	0	0	0	1	2	0	0	0	0	0	0	0	9	0	0	12
16:30	0	0	0	0	0	2	0	0	0	0	0	0	0	4	0	0	6
16:45	0	0	0	0	0	0	0	0	1	0	0	0	0	4	0	0	5
17:00	1	0	0	0	0	2	0	0	0	0	0	0	0	5	0	0	8
17:15	0	1	0	0	0	2	0	0	0	0	0	0	0	2	0	0	5
17:30	0	0	0	0	0	4	0	0	1	0	0	0	0	0	0	0	5
17:45	0	0	0	0	0	3	0	0	0	0	0	0	0	5	0	0	8
18:00																	0
18:15																	0
18:30																	0
18:45																	0
19:00																	0
19:15																	0
19:30																	0
19:45																	0
20:00																	0

TRAFFIC RESEARCH & ANALYSIS, INC.
Specializing in Traffic Data Collection

Traffic Research & Analysis, Inc.
3844 East Indian School Road
Phoenix, AZ 85018
(602) 840-1500

Intersection ID: 1801289
Count Date: 2/5/2018

N 107TH AVE & US 60/GRAND AVE

	10	8	

	North		East		South		West		
	App	Dep	App	Dep	App	Dep	App	Dep	Total
AM	1	3	28	23	2	0	23	28	54
MID	0	0	0	0	0	0	0	0	0
PM	0	0	8	21	2	1	21	9	31
Total	19	9	139	155	8	10	150	142	316

	From North (SB)				From East (WB)				From South (NB)				From West (EB)				INTSEC
	N 107TH AVE				US 60/GRAND AVE				N 107TH AVE				US 60/GRAND AVE				
20:15																	0
20:30																	0
20:45																	0
21:00																	0
21:15																	0
21:30																	0
21:45																	0
22:00																	0
22:15																	0
22:30																	0
22:45																	0
23:00																	0
23:15																	0
23:30																	0
23:45																	0
Total	7	6	6	0	4	130	5	0	6	1	1	0	3	147	0	0	316
AM Peak Hr:																	7:00
Pk Vol	0	0	1	0	0	26	2	0	1	1	0	0	0	23	0	0	54
PHF	n/a	n/a	0.250	n/a	n/a	0.813	0.250	n/a	0.250	0.250	n/a	n/a	n/a	0.821	n/a	n/a	0.964
MID Peak Hr:																	
Pk Vol																	0
PHF																	
PM Peak Hr:																	16:00
Pk Vol	0	0	0	0	1	7	0	0	2	0	0	0	0	21	0	0	31
PHF	n/a	n/a	n/a	n/a	0.250	0.583	n/a	n/a	0.500	n/a	n/a	n/a	n/a	0.583	n/a	n/a	0.646

Comments

Unless shown otherwise, MID period defined as 10:00 AM - 2:00 PM. Peaks defined based on total intersection volume for all vehicle types.

TRAFFIC RESEARCH & ANALYSIS, INC.
Specializing in Traffic Data Collection

Traffic Research & Analysis, Inc.
3844 East Indian School Road
Phoenix, AZ 85018
(602) 840-1500

Intersection ID: 1801289
Count Date: 2/5/2018

N 107TH AVE & US 60/GRAND AVE

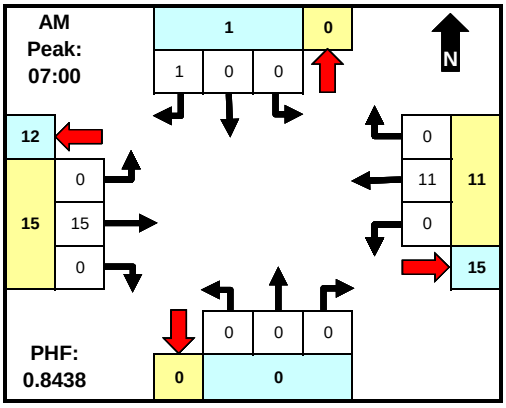

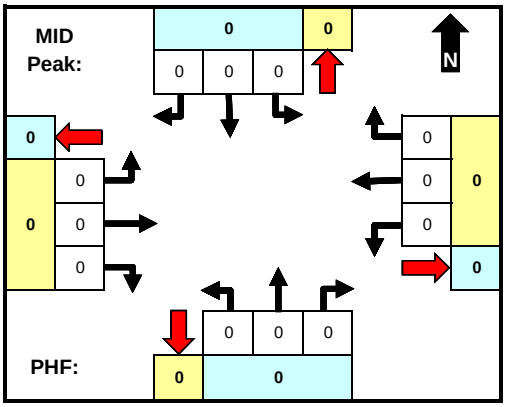

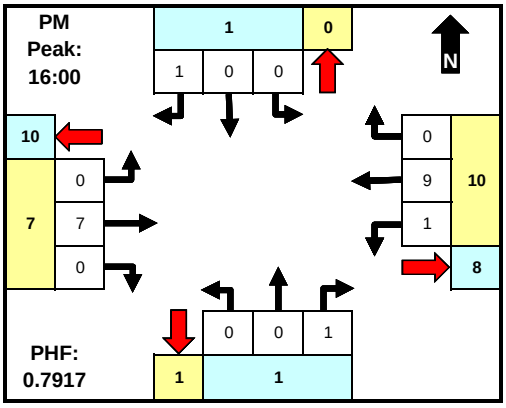

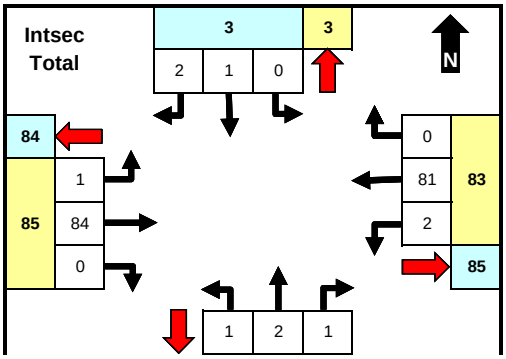

	From North (SB)				From East (WB)				From South (NB)				From West (EB)				INTSEC
	N 107TH AVE				US 60/GRAND AVE				N 107TH AVE				US 60/GRAND AVE				
Time	LT	Thru	RT	U	LT	Thru	RT	U	LT	Thru	RT	U	LT	Thru	RT	U	TOTAL
0:00																	0
0:15																	0
0:30																	0
0:45																	0
1:00																	0
1:15																	0
1:30																	0
1:45																	0
2:00																	0
2:15																	0
2:30																	0
2:45																	0
3:00																	0
3:15																	0
3:30																	0
3:45																	0
4:00																	0
4:15																	0
4:30																	0
4:45																	0
5:00																	0
5:15																	0
5:30																	0
5:45																	0
06:00	0	0	0	0	0	1	0	0	0	0	0	0	0	11	0	0	12
06:15	0	0	0	0	0	5	0	0	0	1	0	0	0	3	0	0	9
06:30	0	0	0	0	0	4	0	0	0	0	0	0	0	5	0	0	9
06:45	0	0	0	0	0	3	0	0	1	0	0	0	0	3	0	0	7
07:00	0	0	0	0	0	6	0	0	0	0	0	0	0	0	0	0	6
07:15	0	0	0	0	0	2	0	0	0	0	0	0	0	6	0	0	8
07:30	0	0	0	0	0	2	0	0	0	0	0	0	0	3	0	0	5
07:45	0	0	1	0	0	1	0	0	0	0	0	0	0	6	0	0	8
08:00	0	0	0	0	0	6	0	0	0	0	0	0	0	3	0	0	9
08:15	0	1	0	0	0	3	0	0	0	0	0	0	1	4	0	0	9
08:30	0	0	0	0	0	4	0	0	0	0	0	0	0	7	0	0	11
08:45	0	0	0	0	0	6	0	0	0	1	0	0	0	4	0	0	11
9:00																	0
9:15																	0
9:30																	0
9:45																	0
10:00																	0
10:15																	0
10:30																	0
10:45																	0
11:00																	0
11:15																	0
11:30																	0
11:45																	0
12:00																	0
12:15																	0
12:30																	0
12:45																	0
13:00																	0
13:15																	0
13:30																	0
13:45																	0
14:00																	0
14:15																	0
14:30																	0
14:45																	0
15:00	0	0	0	0	0	7	0	0	0	0	0	0	0	5	0	0	12
15:15	0	0	0	0	0	2	0	0	0	0	0	0	0	1	0	0	3
15:30	0	0	0	0	0	2	0	0	0	0	0	0	0	0	0	0	2
15:45	0	0	0	0	0	9	0	0	0	0	0	0	0	2	0	0	11
16:00	0	0	1	0	0	2	0	0	0	0	0	0	0	2	0	0	5
16:15	0	0	0	0	1	2	0	0	0	0	0	0	0	1	0	0	4
16:30	0	0	0	0	0	3	0	0	0	0	0	0	0	3	0	0	6
16:45	0	0	0	0	0	2	0	0	0	0	1	0	0	1	0	0	4
17:00	0	0	0	0	0	1	0	0	0	0	0	0	0	4	0	0	5
17:15	0	0	0	0	0	1	0	0	0	0	0	0	0	3	0	0	4
17:30	0	0	0	0	1	3	0	0	0	0	0	0	0	3	0	0	7
17:45	0	0	0	0	0	4	0	0	0	0	0	0	0	4	0	0	8
18:00																	0
18:15																	0
18:30																	0
18:45																	0
19:00																	0
19:15																	0
19:30																	0
19:45																	0
20:00																	0

TRAFFIC RESEARCH & ANALYSIS, INC.
Specializing in Traffic Data Collection

Traffic Research & Analysis, Inc.
3844 East Indian School Road
Phoenix, AZ 85018
(602) 840-1500

Intersection ID: 1801289
Count Date: 2/5/2018

N 107TH AVE & US 60/GRAND AVE

	3	4	

	North		East		South		West		
	App	Dep	App	Dep	App	Dep	App	Dep	Total
AM	1	0	11	15	0	0	15	12	27
MID	0	0	0	0	0	0	0	0	0
PM	1	0	10	8	1	1	7	10	19
Total	3	3	83	85	4	3	85	84	175

	From North (SB)				From East (WB)				From South (NB)				From West (EB)				INTSEC
	N 107TH AVE				US 60/GRAND AVE				N 107TH AVE				US 60/GRAND AVE				
20:15																	0
20:30																	0
20:45																	0
21:00																	0
21:15																	0
21:30																	0
21:45																	0
22:00																	0
22:15																	0
22:30																	0
22:45																	0
23:00																	0
23:15																	0
23:30																	0
23:45																	0
Total	0	1	2	0	2	81	0	0	1	2	1	0	1	84	0	0	175
AM Peak Hr:																	7:00
Pk Vol	0	0	1	0	0	11	0	0	0	0	0	0	0	15	0	0	27
PHF	n/a	n/a	0.250	n/a	n/a	0.458	n/a	n/a	n/a	n/a	n/a	n/a	n/a	0.625	n/a	n/a	0.844
MID Peak Hr:																	
Pk Vol																	0
PHF																	
PM Peak Hr:																	16:00
Pk Vol	0	0	1	0	1	9	0	0	0	0	1	0	0	7	0	0	19
PHF	n/a	n/a	0.250	n/a	0.250	0.750	n/a	n/a	n/a	n/a	0.250	n/a	n/a	0.583	n/a	n/a	0.792

Comments

Unless shown otherwise, MID period defined as 10:00 AM - 2:00 PM. Peaks defined based on total intersection volume for all vehicle types.

TRAFFIC RESEARCH & ANALYSIS, INC.
Specializing in Traffic Data Collection

Traffic Research & Analysis, Inc.
3844 East Indian School Road
Phoenix, AZ 85018
(602) 840-1500

Intersection ID: 1801292
Count Date: 2/5/2018

N 111TH AVE & US 60/GRAND AVE

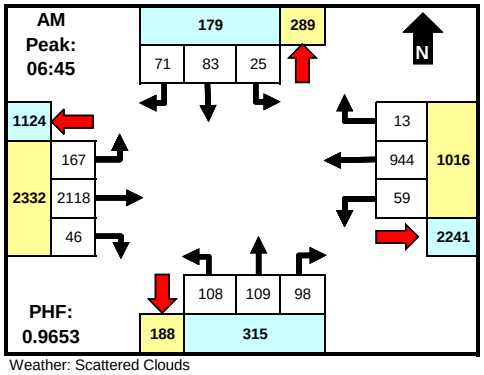

Weather: Scattered Clouds

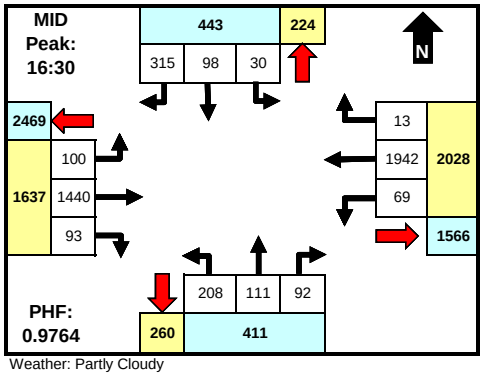

Weather: Partly Cloudy

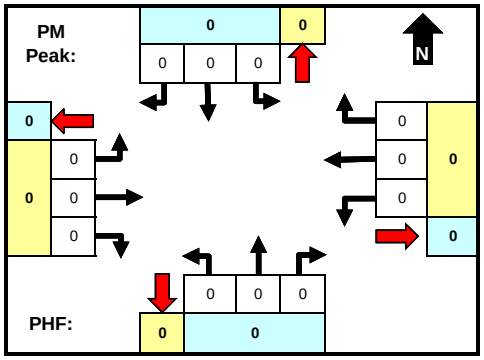

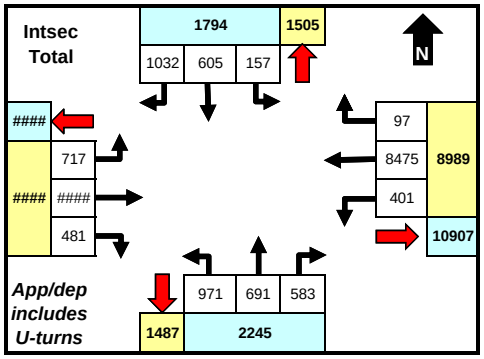

	North		East		South		West		
	App	Dep	App	Dep	App	Dep	App	Dep	Total
AM	179	289	1016	2241	315	188	2332	1124	**3842**
MID	443	224	2028	1566	411	260	1637	2469	**4519**
PM	0	0	0	0	0	0	0	0	**0**
Total	1794	1505	8989	10907	2245	1487	11365	10494	**24393**

	From North (SB)					From East (WB)					From South (NB)					From West (EB)					INTSEC
	N 111TH AVE					US 60/GRAND AVE					N 111TH AVE					US 60/GRAND AVE					
Time	LT	Thru	RT	U	Cwlk	LT	Thru	RT	U	Cwlk	LT	Thru	RT	U	Cwlk	LT	Thru	RT	U	Cwlk	TOTAL
0:00																					0
0:15																					0
0:30																					0
0:45																					0
1:00																					0
1:15																					0
1:30																					0
1:45																					0
2:00																					0
2:15																					0
2:30																					0
2:45																					0
3:00																					0
3:15																					0
3:30																					0
3:45																					0
4:00																					0
4:15																					0
4:30																					0
4:45																					0
5:00																					0
5:15																					0
5:30																					0
5:45																					0
6:00	3	8	4	0		10	166	1	0		22	16	17	0		19	548	11	0		**825**
6:15	7	15	12	0		7	198	1	0		13	17	20	0		29	551	19	0		**889**
6:30	6	11	15	0		8	221	1	0		33	35	21	0		24	527	11	2		**915**
6:45	7	26	22	0		22	223	6	0		26	25	24	0		45	557	12	0		**995**
7:00	8	17	12	0		16	248	0	0		36	27	19	0		33	495	11	0		**922**
7:15	6	23	16	0		9	242	4	0		17	25	28	0		48	548	9	1		**976**
7:30	4	17	21	0		12	231	3	0		29	32	27	0		41	518	14	0		**949**
7:45	3	28	13	0		21	256	3	0		46	26	25	0		32	456	32	0		**941**
8:00	4	31	29	0		22	264	6	0		43	34	20	0		29	415	17	0		**914**
8:15	10	25	21	0		15	237	8	0		36	28	26	0		34	461	23	3		**927**
8:30	5	42	19	0		24	304	2	0		41	33	33	0		33	446	18	1		**1001**
8:45	1	32	18	0		16	279	8	1		27	42	20	0		28	389	21	1		**883**
9:00																					0
9:15																					0
9:30																					0
9:45																					0
10:00																					0
10:15																					0
10:30																					0
10:45																					0
11:00																					0
11:15																					0
11:30																					0
11:45																					0
12:00																					0
12:15																					0
12:30																					0
12:45																					0
13:00																					0
13:15																					0
13:30																					0
13:45																					0
14:00																					0
14:15																					0
14:30																					0
14:45																					0
15:00	8	36	56	0		18	439	4	2		55	32	34	0		35	387	30	0		**1136**
15:15	7	24	48	0		15	442	9	2		49	31	30	0		26	365	18	2		**1068**
15:30	8	29	69	0		24	480	9	0		48	34	20	0		31	384	21	1		**1158**
15:45	6	34	74	0		22	459	1	1		51	34	29	0		36	322	29	0		**1098**
16:00	7	40	75	0		16	455	4	3		48	32	31	0		20	339	26	0		**1096**
16:15	15	30	81	0		23	454	9	0		56	37	19	0		22	355	21	0		**1122**
16:30	7	30	76	0		16	519	0	1		53	38	21	0		19	331	16	1		**1128**
16:45	11	19	80	0		23	490	7	1		52	23	22	0		24	367	25	2		**1146**
17:00	8	16	67	0		12	447	1	0		60	30	21	0		31	365	30	0		**1088**
17:15	4	33	92	0		18	486	5	2		43	20	28	0		26	377	22	1		**1157**
17:30	6	22	62	0		17	447	2	0		49	21	26	0		25	345	22	1		**1045**
17:45	6	17	50	0		15	488	3	3		38	19	22	0		27	303	23	0		**1014**
18:00																					0
18:15																					0
18:30																					0
18:45																					0
19:00																					0
19:15																					0
19:30																					0
19:45																					0
20:00																					0
20:15																					0
20:30																					0
20:45																					0
21:00																					0
21:15																					0
21:30																					0
21:45																					0
22:00																					0
22:15																					0
22:30																					0
22:45																					0
Total																					

TRAFFIC RESEARCH & ANALYSIS, INC.
Specializing in Traffic Data Collection

Traffic Research & Analysis, Inc.
3844 East Indian School Road
Phoenix, AZ 85018
(602) 840-1500

Intersection ID: 1801292
Count Date: 2/5/2018

N 111TH AVE & US 60/GRAND AVE

	From North (SB)					From East (WB)					From South (NB)					From West (EB)					INTSEC
	N 111TH AVE					US 60/GRAND AVE					N 111TH AVE					US 60/GRAND AVE					
23:00																					0
23:15																					0
23:30																					0
23:45																					0
Total	157	605	1032	0	0	401	8475	97	16	0	971	691	583	0	0	717	####	481	16	0	24393
AM Peak Hr:																					6:45
Pk Vol	25	83	71	0	0	59	944	13	0	0	108	109	98	0	0	167	2118	46	1	0	3842
PHF	0.781	0.798	0.807	n/a	n/a	0.670	0.952	0.542	n/a	n/a	0.750	0.852	0.875	n/a	n/a	0.870	0.951	0.821	0.250	n/a	0.965
MID Peak Hr:																					16:30
Pk Vol	30	98	315	0	0	69	1942	13	4	0	208	111	92	0	0	100	1440	93	4	0	4519
PHF	0.682	0.742	0.856	n/a	n/a	0.750	0.935	0.464	0.500	n/a	0.867	0.730	0.821	n/a	n/a	0.806	0.955	0.775	0.500	n/a	0.976
PM Peak Hr:																					
Pk Vol																					0
PHF																					

Comments

Unless shown otherwise, MID period defined as 10:00 AM - 2:00 PM. Peaks defined based on total intersection volume for all vehicle types. Chart totals do not include crosswalk data.

TRAFFIC RESEARCH & ANALYSIS, INC.
Specializing in Traffic Data Collection

Traffic Research & Analysis, Inc.
3844 East Indian School Road
Phoenix, AZ 85018
(602) 840-1500

Intersection ID: 1801292
Count Date: 2/5/2018

N 111TH AVE & US 60/GRAND AVE

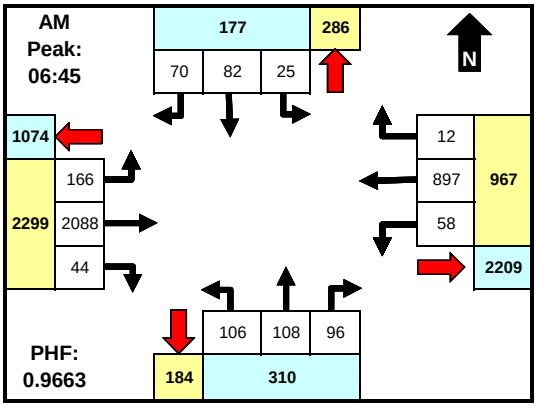

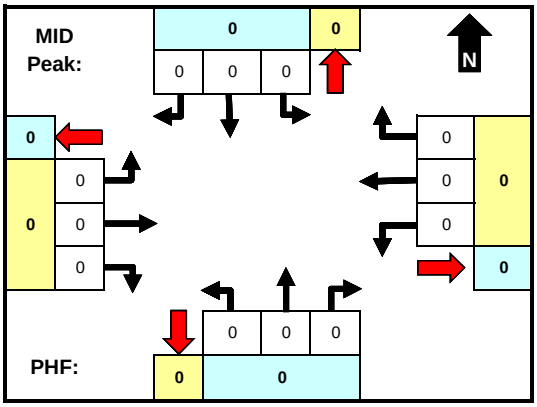

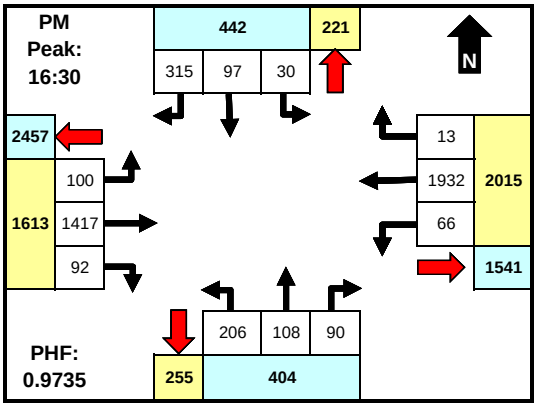

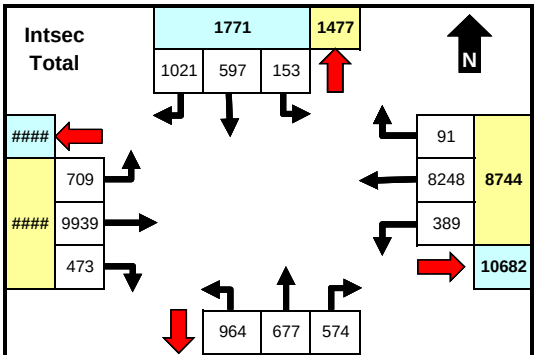

	From North (SB)				From East (WB)				From South (NB)				From West (EB)				INTSEC
	N 111TH AVE				US 60/GRAND AVE				N 111TH AVE				US 60/GRAND AVE				
Time	LT	Thru	RT	U	LT	Thru	RT	U	LT	Thru	RT	U	LT	Thru	RT	U	TOTAL
0:00																	0
0:15																	0
0:30																	0
0:45																	0
1:00																	0
1:15																	0
1:30																	0
1:45																	0
2:00																	0
2:15																	0
2:30																	0
2:45																	0
3:00																	0
3:15																	0
3:30																	0
3:45																	0
4:00																	0
4:15																	0
4:30																	0
4:45																	0
5:00																	0
5:15																	0
5:30																	0
5:45																	0
06:00	3	8	4	0	10	157	1	0	22	16	17	0	19	531	10	0	798
06:15	7	14	12	0	7	184	1	0	13	17	20	0	27	542	19	0	863
06:30	6	11	14	0	8	205	1	0	33	34	21	0	21	516	10	2	882
06:45	7	26	22	0	22	210	6	0	25	24	23	0	44	551	11	0	971
07:00	8	17	12	0	15	235	0	0	36	27	18	0	33	492	10	0	903
07:15	6	22	15	0	9	230	4	0	16	25	28	0	48	536	9	1	949
07:30	4	17	21	0	12	222	2	0	29	32	27	0	41	509	14	0	930
07:45	3	28	13	0	19	246	3	0	46	25	25	0	32	445	32	0	917
08:00	3	30	28	0	21	247	6	0	43	34	20	0	29	406	17	0	884
08:15	10	25	21	0	14	226	6	0	36	28	26	0	34	451	23	3	903
08:30	5	42	17	0	22	290	2	0	41	33	33	0	33	433	18	1	970
08:45	1	32	18	0	16	268	7	1	26	40	20	0	28	377	21	1	856
9:00																	0
9:15																	0
9:30																	0
9:45																	0
10:00																	0
10:15																	0
10:30																	0
10:45																	0
11:00																	0
11:15																	0
11:30																	0
11:45																	0
12:00																	0
12:15																	0
12:30																	0
12:45																	0
13:00																	0
13:15																	0
13:30																	0
13:45																	0
14:00																	0
14:15																	0
14:30																	0
14:45																	0
15:00	8	34	55	0	18	424	4	2	55	32	34	0	34	369	30	0	1099
15:15	7	24	47	0	14	436	9	2	49	30	29	0	26	352	17	2	1044
15:30	7	29	68	0	23	471	9	0	48	32	18	0	31	375	21	1	1133
15:45	5	34	72	0	22	445	1	1	51	34	28	0	36	318	28	0	1075
16:00	7	39	75	0	16	448	4	3	47	31	31	0	20	333	25	0	1079
16:15	14	30	80	0	23	451	8	0	55	37	19	0	22	349	21	0	1109
16:30	7	30	76	0	16	515	0	1	52	37	20	0	19	326	16	1	1116
16:45	11	19	80	0	23	487	7	1	52	22	21	0	24	362	25	2	1136
17:00	8	15	67	0	11	445	1	0	59	29	21	0	31	356	30	0	1073
17:15	4	33	92	0	16	485	5	2	43	20	28	0	26	373	21	1	1149
17:30	6	21	62	0	17	440	2	0	49	20	26	0	25	340	22	1	1031
17:45	6	17	50	0	15	481	2	3	38	18	21	0	26	297	23	0	997
18:00																	0
18:15																	0
18:30																	0
18:45																	0
19:00																	0
19:15																	0
19:30																	0
19:45																	0
20:00																	0

TRAFFIC RESEARCH & ANALYSIS, INC.
Specializing in Traffic Data Collection

Traffic Research & Analysis, Inc.
3844 East Indian School Road
Phoenix, AZ 85018
(602) 840-1500

Intersection ID: 1801292
Count Date: 2/5/2018

N 111TH AVE & US 60/GRAND AVE

	1459	2215

	North		East		South		West		
	App	Dep	App	Dep	App	Dep	App	Dep	Total
AM	177	286	967	2209	310	184	2299	1074	**3753**
MID	0	0	0	0	0	0	0	0	**0**
PM	442	221	2015	1541	404	255	1613	2457	**4474**
Total	1771	1477	8744	10682	2215	1459	11137	10249	**23867**

	From North (SB)				From East (WB)				From South (NB)				From West (EB)				INTSEC
	N 111TH AVE				US 60/GRAND AVE				N 111TH AVE				US 60/GRAND AVE				
20:15																	0
20:30																	0
20:45																	0
21:00																	0
21:15																	0
21:30																	0
21:45																	0
22:00																	0
22:15																	0
22:30																	0
22:45																	0
23:00																	0
23:15																	0
23:30																	0
23:45																	0
Total	153	597	1021	0	389	8248	91	16	964	677	574	0	709	9939	473	16	23867
AM Peak Hr:																	6:45
Pk Vol	25	82	70	0	58	897	12	0	106	108	96	0	166	2088	44	1	3753
PHF	0.781	0.788	0.795	n/a	0.659	0.954	0.500	n/a	0.736	0.844	0.857	n/a	0.865	0.947	0.786	0.250	0.966
MID Peak Hr:																	
Pk Vol																	0
PHF																	
PM Peak Hr:																	16:30
Pk Vol	30	97	315	0	66	1932	13	4	206	108	90	0	100	1417	92	4	4474
PHF	0.682	0.735	0.856	n/a	0.717	0.938	0.464	0.500	0.873	0.730	0.804	n/a	0.806	0.950	0.767	0.500	0.973

Comments

Unless shown otherwise, MID period defined as 10:00 AM - 2:00 PM. Peaks defined based on total intersection volume for all vehicle types.

TRAFFIC RESEARCH & ANALYSIS, INC.
Specializing in Traffic Data Collection

Traffic Research & Analysis, Inc.
3844 East Indian School Road
Phoenix, AZ 85018
(602) 840-1500

Intersection ID: 1801292
Count Date: 2/5/2018

N 111TH AVE & US 60/GRAND AVE

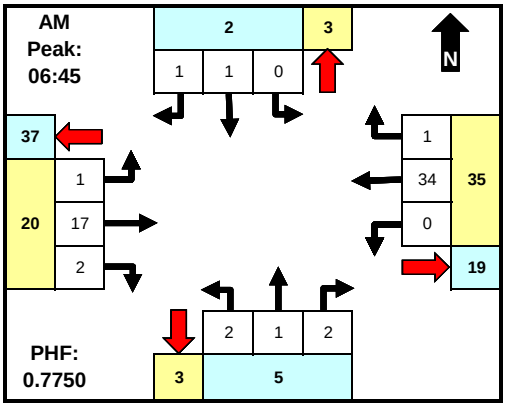

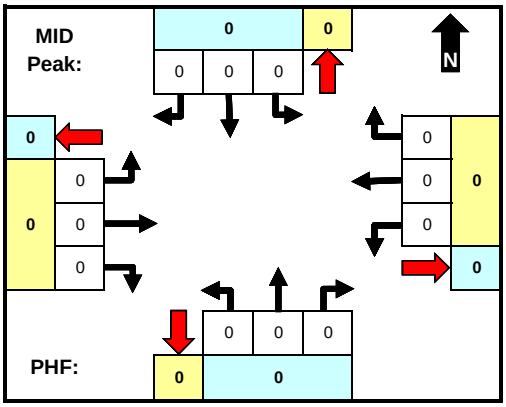

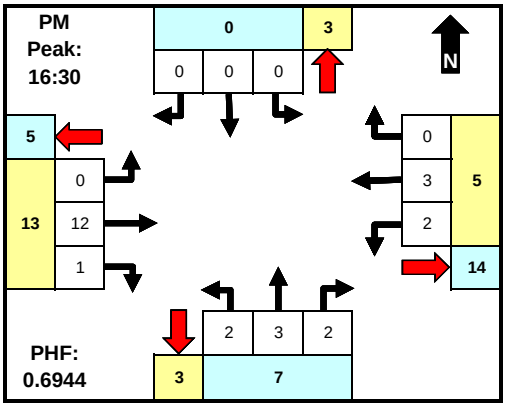

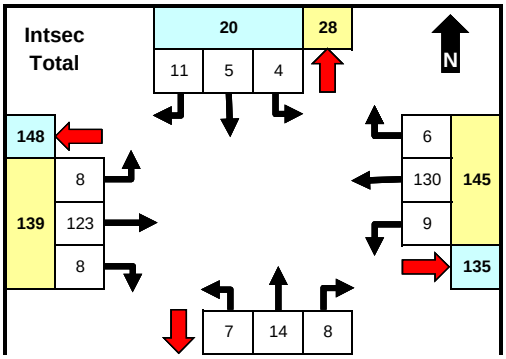

	From North (SB)				From East (WB)				From South (NB)				From West (EB)				INTSEC
	N 111TH AVE				US 60/GRAND AVE				N 111TH AVE				US 60/GRAND AVE				
Time	LT	Thru	RT	U	LT	Thru	RT	U	LT	Thru	RT	U	LT	Thru	RT	U	TOTAL
0:00																	0
0:15																	0
0:30																	0
0:45																	0
1:00																	0
1:15																	0
1:30																	0
1:45																	0
2:00																	0
2:15																	0
2:30																	0
2:45																	0
3:00																	0
3:15																	0
3:30																	0
3:45																	0
4:00																	0
4:15																	0
4:30																	0
4:45																	0
5:00																	0
5:15																	0
5:30																	0
5:45																	0
06:00	0	0	0	0	0	6	0	0	0	0	0	0	0	6	1	0	13
06:15	0	1	0	0	0	9	0	0	0	0	0	0	2	7	0	0	19
06:30	0	0	1	0	0	9	0	0	0	1	0	0	3	4	1	0	19
06:45	0	0	0	0	0	11	0	0	1	1	1	0	1	4	1	0	20
07:00	0	0	0	0	0	7	0	0	0	0	1	0	0	2	1	0	11
07:15	0	1	1	0	0	9	0	0	1	0	0	0	0	5	0	0	17
07:30	0	0	0	0	0	7	1	0	0	0	0	0	0	6	0	0	14
07:45	0	0	0	0	2	9	0	0	0	1	0	0	0	5	0	0	17
08:00	1	1	1	0	1	10	0	0	0	0	0	0	0	6	0	0	20
08:15	0	0	0	0	1	7	2	0	0	0	0	0	0	5	0	0	15
08:30	0	0	2	0	2	8	0	0	0	0	0	0	0	5	0	0	17
08:45	0	0	0	0	0	5	1	0	1	2	0	0	0	9	0	0	18
9:00																	0
9:15																	0
9:30																	0
9:45																	0
10:00																	0
10:15																	0
10:30																	0
10:45																	0
11:00																	0
11:15																	0
11:30																	0
11:45																	0
12:00																	0
12:15																	0
12:30																	0
12:45																	0
13:00																	0
13:15																	0
13:30																	0
13:45																	0
14:00																	0
14:15																	0
14:30																	0
14:45																	0
15:00	0	1	1	0	0	6	0	0	0	0	0	0	1	12	0	0	21
15:15	0	0	1	0	0	5	0	0	0	1	1	0	0	12	1	0	21
15:30	1	0	1	0	1	7	0	0	0	2	1	0	0	9	0	0	22
15:45	1	0	2	0	0	4	0	0	0	0	1	0	0	3	1	0	12
16:00	0	1	0	0	0	2	0	0	1	1	0	0	0	4	1	0	10
16:15	1	0	1	0	0	0	1	0	1	0	0	0	0	5	0	0	9
16:30	0	0	0	0	0	1	0	0	1	1	1	0	0	2	0	0	6
16:45	0	0	0	0	0	1	0	0	0	1	1	0	0	4	0	0	7
17:00	0	0	0	0	1	1	0	0	1	1	0	0	0	5	0	0	9
17:15	0	0	0	0	1	0	0	0	0	0	0	0	0	1	1	0	3
17:30	0	0	0	0	0	5	0	0	0	1	0	0	0	0	0	0	6
17:45	0	0	0	0	0	1	1	0	0	1	1	0	1	2	0	0	7
18:00																	0
18:15																	0
18:30																	0
18:45																	0
19:00																	0
19:15																	0
19:30																	0
19:45																	0
20:00																	0

TRAFFIC RESEARCH & ANALYSIS, INC.
Specializing in Traffic Data Collection

Traffic Research & Analysis, Inc.
3844 East Indian School Road
Phoenix, AZ 85018
(602) 840-1500

Intersection ID: 1801292
Count Date: 2/5/2018

N 111TH AVE & US 60/GRAND AVE

	22	29	

	North		East		South		West		
	App	Dep	App	Dep	App	Dep	App	Dep	Total
AM	2	3	35	19	5	3	20	37	62
MID	0	0	0	0	0	0	0	0	0
PM	0	3	5	14	7	3	13	5	25
Total	20	28	145	135	29	22	139	148	333

	From North (SB)				From East (WB)				From South (NB)				From West (EB)				INTSEC
	N 111TH AVE				US 60/GRAND AVE				N 111TH AVE				US 60/GRAND AVE				
20:15																	0
20:30																	0
20:45																	0
21:00																	0
21:15																	0
21:30																	0
21:45																	0
22:00																	0
22:15																	0
22:30																	0
22:45																	0
23:00																	0
23:15																	0
23:30																	0
23:45																	0
Total	4	5	11	0	9	130	6	0	7	14	8	0	8	123	8	0	333
AM Peak Hr:																	6:45
Pk Vol	0	1	1	0	0	34	1	0	2	1	2	0	1	17	2	0	62
PHF	n/a	0.250	0.250	n/a	n/a	0.773	0.250	n/a	0.500	0.250	0.500	n/a	0.250	0.708	0.500	n/a	0.775
MID Peak Hr:																	
Pk Vol																	0
PHF																	
PM Peak Hr:																	16:30
Pk Vol	0	0	0	0	2	3	0	0	2	3	2	0	0	12	1	0	25
PHF	n/a	n/a	n/a	n/a	0.500	0.750	n/a	n/a	0.500	0.750	0.500	n/a	n/a	0.600	0.250	n/a	0.694

Comments

Unless shown otherwise, MID period defined as 10:00 AM - 2:00 PM. Peaks defined based on total intersection volume for all vehicle types.

TRAFFIC RESEARCH & ANALYSIS, INC.
Specializing in Traffic Data Collection

Traffic Research & Analysis, Inc.
3844 East Indian School Road
Phoenix, AZ 85018
(602) 840-1500

Intersection ID: 1801292
Count Date: 2/5/2018

N 111TH AVE & US 60/GRAND AVE

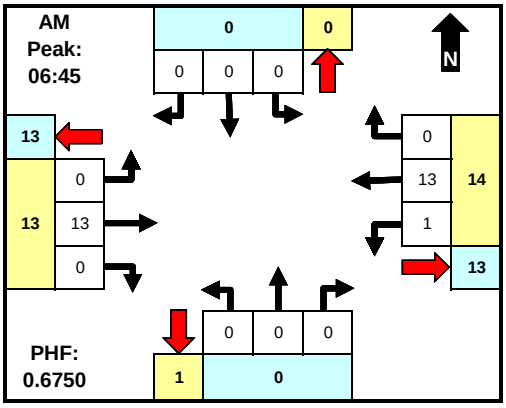

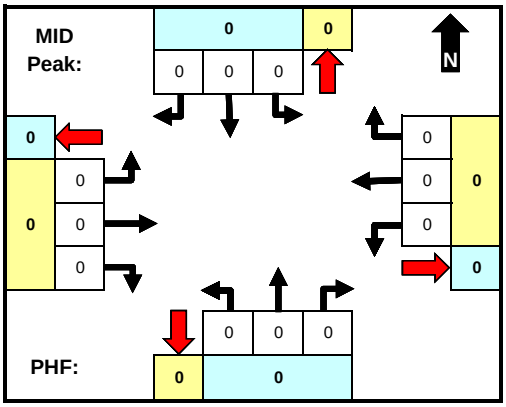

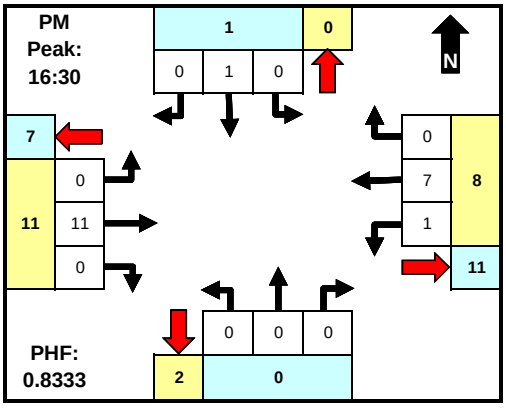

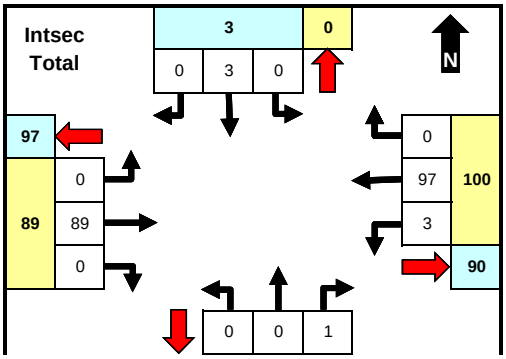

	From North (SB)				From East (WB)				From South (NB)				From West (EB)				INTSEC
	N 111TH AVE				US 60/GRAND AVE				N 111TH AVE				US 60/GRAND AVE				
Time	LT	Thru	RT	U	LT	Thru	RT	U	LT	Thru	RT	U	LT	Thru	RT	U	TOTAL
0:00																	0
0:15																	0
0:30																	0
0:45																	0
1:00																	0
1:15																	0
1:30																	0
1:45																	0
2:00																	0
2:15																	0
2:30																	0
2:45																	0
3:00																	0
3:15																	0
3:30																	0
3:45																	0
4:00																	0
4:15																	0
4:30																	0
4:45																	0
5:00																	0
5:15																	0
5:30																	0
5:45																	0
06:00	0	0	0	0	0	3	0	0	0	0	0	0	0	11	0	0	14
06:15	0	0	0	0	0	5	0	0	0	0	0	0	0	2	0	0	7
06:30	0	0	0	0	0	7	0	0	0	0	0	0	0	7	0	0	14
06:45	0	0	0	0	0	2	0	0	0	0	0	0	0	2	0	0	4
07:00	0	0	0	0	1	6	0	0	0	0	0	0	0	1	0	0	8
07:15	0	0	0	0	0	3	0	0	0	0	0	0	0	7	0	0	10
07:30	0	0	0	0	0	2	0	0	0	0	0	0	0	3	0	0	5
07:45	0	0	0	0	0	1	0	0	0	0	0	0	0	6	0	0	7
08:00	0	0	0	0	0	7	0	0	0	0	0	0	0	3	0	0	10
08:15	0	0	0	0	0	4	0	0	0	0	0	0	0	5	0	0	9
08:30	0	0	0	0	0	6	0	0	0	0	0	0	0	8	0	0	14
08:45	0	0	0	0	0	6	0	0	0	0	0	0	0	3	0	0	9
9:00																	0
9:15																	0
9:30																	0
9:45																	0
10:00																	0
10:15																	0
10:30																	0
10:45																	0
11:00																	0
11:15																	0
11:30																	0
11:45																	0
12:00																	0
12:15																	0
12:30																	0
12:45																	0
13:00																	0
13:15																	0
13:30																	0
13:45																	0
14:00																	0
14:15																	0
14:30																	0
14:45																	0
15:00	0	1	0	0	0	9	0	0	0	0	0	0	0	6	0	0	16
15:15	0	0	0	0	1	1	0	0	0	0	0	0	0	1	0	0	3
15:30	0	0	0	0	0	2	0	0	0	0	1	0	0	0	0	0	3
15:45	0	0	0	0	0	10	0	0	0	0	0	0	0	1	0	0	11
16:00	0	0	0	0	0	5	0	0	0	0	0	0	0	2	0	0	7
16:15	0	0	0	0	0	3	0	0	0	0	0	0	0	1	0	0	4
16:30	0	0	0	0	0	3	0	0	0	0	0	0	0	3	0	0	6
16:45	0	0	0	0	0	2	0	0	0	0	0	0	0	1	0	0	3
17:00	0	1	0	0	0	1	0	0	0	0	0	0	0	4	0	0	6
17:15	0	0	0	0	1	1	0	0	0	0	0	0	0	3	0	0	5
17:30	0	1	0	0	0	2	0	0	0	0	0	0	0	5	0	0	8
17:45	0	0	0	0	0	6	0	0	0	0	0	0	0	4	0	0	10
18:00																	0
18:15																	0
18:30																	0
18:45																	0
19:00																	0
19:15																	0
19:30																	0
19:45																	0
20:00																	0

TRAFFIC RESEARCH & ANALYSIS, INC.
Specializing in Traffic Data Collection

Traffic Research & Analysis, Inc.
3844 East Indian School Road
Phoenix, AZ 85018
(602) 840-1500

Intersection ID: 1801292
Count Date: 2/5/2018

N 111TH AVE & US 60/GRAND AVE

	6	1

	North		East		South		West		
	App	Dep	App	Dep	App	Dep	App	Dep	Total
AM	0	0	14	13	0	1	13	13	27
MID	0	0	0	0	0	0	0	0	0
PM	1	0	8	11	0	2	11	7	20
Total	3	0	100	90	1	6	89	97	193

	From North (SB)				From East (WB)				From South (NB)				From West (EB)				INTSEC
	N 111TH AVE				US 60/GRAND AVE				N 111TH AVE				US 60/GRAND AVE				
20:15																	0
20:30																	0
20:45																	0
21:00																	0
21:15																	0
21:30																	0
21:45																	0
22:00																	0
22:15																	0
22:30																	0
22:45																	0
23:00																	0
23:15																	0
23:30																	0
23:45																	0
Total	0	3	0	0	3	97	0	0	0	0	1	0	0	89	0	0	193
AM Peak Hr:																	6:45
Pk Vol	0	0	0	0	1	13	0	0	0	0	0	0	0	13	0	0	27
PHF	n/a	n/a	n/a	n/a	0.250	0.542	n/a	n/a	n/a	n/a	n/a	n/a	n/a	0.464	n/a	n/a	0.675
MID Peak Hr:																	
Pk Vol																	0
PHF																	
PM Peak Hr:																	16:30
Pk Vol	0	1	0	0	1	7	0	0	0	0	0	0	0	11	0	0	20
PHF	n/a	0.250	n/a	n/a	0.250	0.583	n/a	n/a	n/a	n/a	n/a	n/a	n/a	0.688	n/a	n/a	0.833

Comments

Unless shown otherwise, MID period defined as 10:00 AM - 2:00 PM. Peaks defined based on total intersection volume for all vehicle types.

TRAFFIC RESEARCH & ANALYSIS, INC.
Specializing in Traffic Data Collection

Traffic Research & Analysis, Inc.
3844 East Indian School Road
Phoenix, AZ 85018
(602) 840-1500

Intersection ID: 1801291
Count Date: 5/2/2018

N 113TH AVE & US 60/GRAND AVE

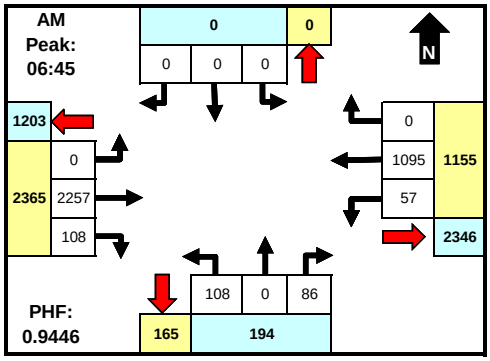

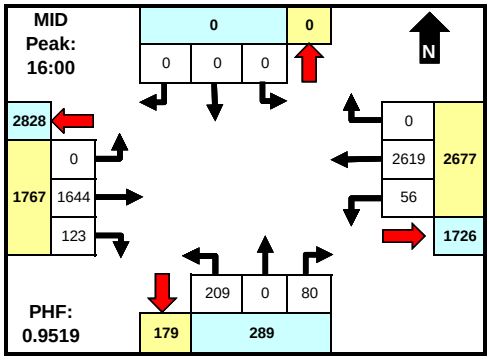

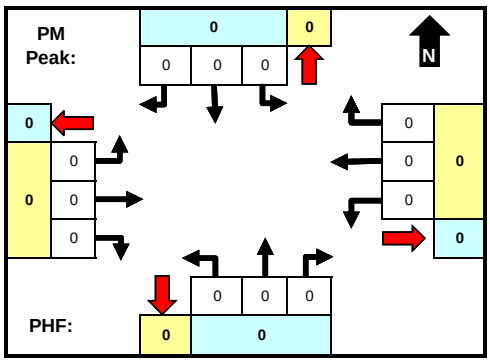

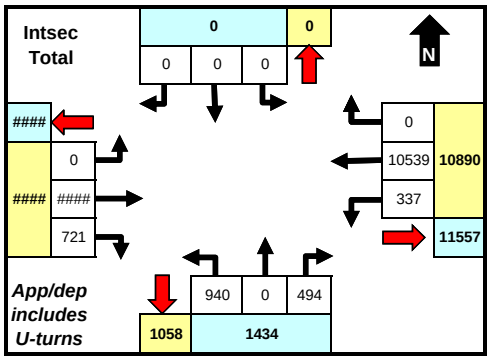

	North		East		South		West		
	App	Dep	App	Dep	App	Dep	App	Dep	Total
AM	0	0	1155	2346	194	165	2365	1203	3714
MID	0	0	2677	1726	289	179	1767	2828	4733
PM	0	0	0	0	0	0	0	0	0
Total	0	0	10890	11557	1434	1058	11770	11479	24094

	From North (SB)					From East (WB)					From South (NB)					From West (EB)					INTSEC
	NONE					US 60/GRAND AVE					N 113TH AVE					US 60/GRAND AVE					
Time	LT	Thru	RT	U	Cwlk	LT	Thru	RT	U	Cwlk	LT	Thru	RT	U	Cwlk	LT	Thru	RT	U	Cwlk	TOTAL
0:00																					0
0:15																					0
0:30																					0
0:45																					0
1:00																					0
1:15																					0
1:30																					0
1:45																					0
2:00																					0
2:15																					0
2:30																					0
2:45																					0
3:00																					0
3:15																					0
3:30																					0
3:45																					0
4:00																					0
4:15																					0
4:30																					0
4:45																					0
5:00																					0
5:15																					0
5:30																					0
5:45																					0
6:00						7	184		0		19		19	0			567	22	0		818
6:15						10	196		0		20		33	0			603	12	0		874
6:30						8	244		0		31		26	0			576	22	0		907
6:45						13	284		0		24		22	0			619	21	0		983
7:00						12	256		1		23		20	0			534	25	0		871
7:15						14	259		1		26		23	0			550	23	0		896
7:30						18	296		1		35		21	0			554	39	0		964
7:45						19	312		0		43		18	0			504	62	0		958
8:00						14	325		0		44		21	0			433	45	0		882
8:15						8	304		1		29		19	0			503	23	0		887
8:30						10	360		0		26		29	0			487	33	0		945
8:45						19	314		1		18		8	0			411	26	0		797
9:00																					0
9:15																					0
9:30																					0
9:45																					0
10:00																					0
10:15																					0
10:30																					0
10:45																					0
11:00																					0
11:15																					0
11:30																					0
11:45																					0
12:00																					0
12:15																					0
12:30																					0
12:45																					0
13:00																					0
13:15																					0
13:30																					0
13:45																					0
14:00																					0
14:15																					0
14:30																					0
14:45																					0
15:00						20	575		1		69		21	0			413	42	0		1141
15:15						19	541		1		48		24	0			387	32	0		1052
15:30						23	583		1		50		21	0			407	46	0		1131
15:45						13	607		2		40		20	0			361	32	0		1075
16:00						13	610		1		66		26	0			359	34	0		1109
16:15						16	644		0		41		19	0			447	31	0		1198
16:30						15	691		1		46		20	0			379	31	0		1183
16:45						12	674		0		56		15	0			459	27	0		1243
17:00						15	575		0		48		12	0			416	25	0		1091
17:15						14	615		1		51		18	0			419	28	0		1146
17:30						11	545		1		41		25	0			342	20	0		985
17:45						14	545		0		46		14	0			319	20	0		958
18:00																					0
18:15																					0
18:30																					0
18:45																					0
19:00																					0
19:15																					0
19:30																					0
19:45																					0
20:00																					0
20:15																					0
20:30																					0
20:45																					0
21:00																					0
21:15																					0
21:30																					0
21:45																					0
22:00																					0
22:15																					0
22:30																					0
22:45																					0
Total																					

TRAFFIC RESEARCH & ANALYSIS, INC.
Specializing in Traffic Data Collection

Traffic Research & Analysis, Inc.
3844 East Indian School Road
Phoenix, AZ 85018
(602) 840-1500

Intersection ID: 1801291
Count Date: 5/2/2018

N 113TH AVE & US 60/GRAND AVE

	From North (SB)					From East (WB)					From South (NB)					From West (EB)					INTSEC
	NONE					US 60/GRAND AVE					N 113TH AVE					US 60/GRAND AVE					
23:00																					0
23:15																					0
23:30																					0
23:45																					0
Total	0	0	0	0	0	337	####	0	14	0	940	0	494	0	0	0	####	721	0	0	24094
AM Peak Hr:																					6:45
Pk Vol	0	0	0	0	0	57	1095	0	3	0	108	0	86	0	0	0	2257	108	0	0	3714
PHF	n/a	n/a	n/a	n/a	n/a	0.792	0.925	n/a	0.750	n/a	0.771	n/a	0.935	n/a	n/a	n/a	0.912	0.692	n/a	n/a	0.945
MID Peak Hr:																					16:00
Pk Vol	0	0	0	0	0	56	2619	0	2	0	209	0	80	0	0	0	1644	123	0	0	4733
PHF	n/a	n/a	n/a	n/a	n/a	0.875	0.948	n/a	0.500	n/a	0.792	n/a	0.769	n/a	n/a	n/a	0.895	0.904	n/a	n/a	0.952
PM Peak Hr:																					
Pk Vol																					0
PHF																					

Comments

Unless shown otherwise, MID period defined as 10:00 AM - 2:00 PM. Peaks defined based on total intersection volume for all vehicle types. Chart totals do not include crosswalk data.

TRAFFIC RESEARCH & ANALYSIS, INC.
Specializing in Traffic Data Collection

Traffic Research & Analysis, Inc.
3844 East Indian School Road
Phoenix, AZ 85018
(602) 840-1500

Intersection ID: 1801291
Count Date: 5/2/2018

N 113TH AVE & US 60/GRAND AVE

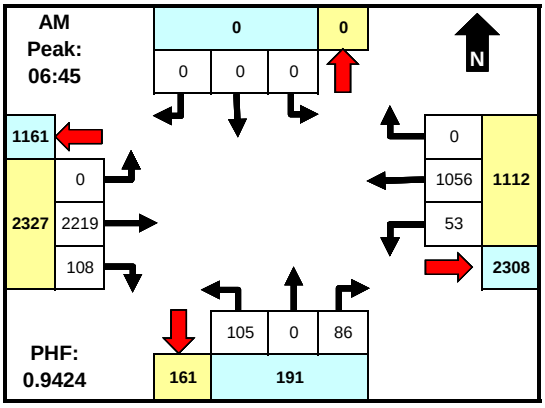

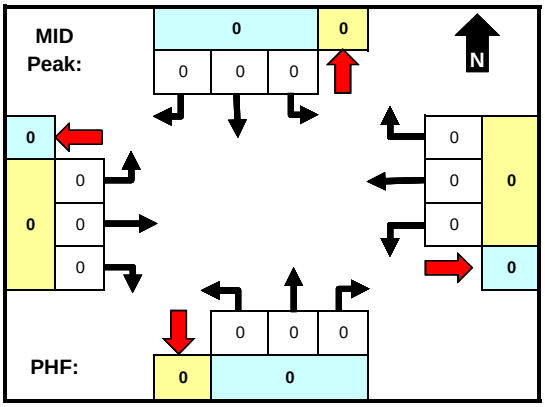

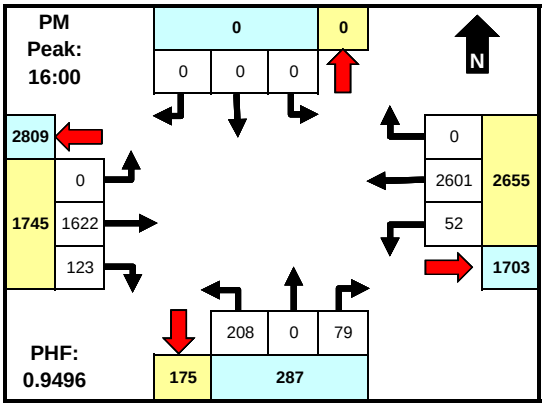

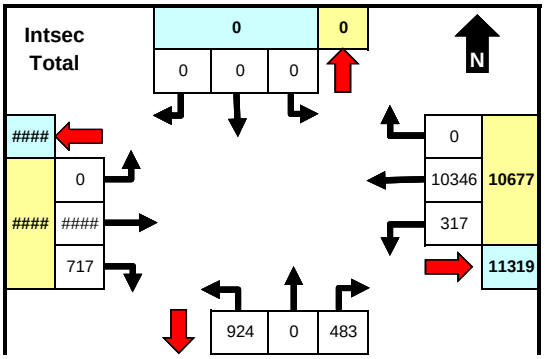

	From North (SB)				From East (WB)				From South (NB)				From West (EB)				INTSEC
	NONE				US 60/GRAND AVE				N 113TH AVE				US 60/GRAND AVE				
Time	LT	Thru	RT	U	LT	Thru	RT	U	LT	Thru	RT	U	LT	Thru	RT	U	TOTAL
0:00																	0
0:15																	0
0:30																	0
0:45																	0
1:00																	0
1:15																	0
1:30																	0
1:45																	0
2:00																	0
2:15																	0
2:30																	0
2:45																	0
3:00																	0
3:15																	0
3:30																	0
3:45																	0
4:00																	0
4:15																	0
4:30																	0
4:45																	0
5:00																	0
5:15																	0
5:30																	0
5:45																	0
6:00					7	174		0	18		19	0		550	22	0	790
6:15					6	186		0	18		32	0		585	12	0	839
6:30					8	229		0	30		25	0		560	22	0	874
6:45					11	275		0	23		22	0		611	21	0	963
7:00					12	244		1	22		20	0		528	25	0	852
7:15					12	247		1	26		23	0		537	23	0	869
7:30					18	290		1	34		21	0		543	39	0	946
7:45					13	307		0	42		18	0		495	62	0	937
8:00					14	317		0	43		21	0		425	45	0	865
8:15					8	296		1	25		19	0		493	23	0	865
8:30					10	346		0	25		28	0		474	33	0	916
8:45					19	304		1	18		8	0		401	26	0	777
9:00																	0
9:15																	0
9:30																	0
9:45																	0
10:00																	0
10:15																	0
10:30																	0
10:45																	0
11:00																	0
11:15																	0
11:30																	0
11:45																	0
12:00																	0
12:15																	0
12:30																	0
12:45																	0
13:00																	0
13:15																	0
13:30																	0
13:45																	0
14:00																	0
14:15																	0
14:30																	0
14:45																	0
15:00					20	564		1	69		18	0		393	40	0	1105
15:15					17	536		1	48		22	0		374	32	0	1030
15:30					23	575		1	50		21	0		401	44	0	1115
15:45					13	593		2	39		20	0		354	32	0	1053
16:00					9	605		1	66		25	0		353	34	0	1093
16:15					16	638		0	41		19	0		442	31	0	1187
16:30					15	687		1	46		20	0		373	31	0	1173
16:45					12	671		0	55		15	0		454	27	0	1234
17:00					15	572		0	48		12	0		410	25	0	1082
17:15					14	614		1	51		16	0		415	28	0	1139
17:30					11	537		1	41		25	0		339	20	0	974
17:45					14	539		0	46		14	0		312	20	0	945
18:00																	0
18:15																	0
18:30																	0
18:45																	0
19:00																	0
19:15																	0
19:30																	0
19:45																	0
20:00																	0

TRAFFIC RESEARCH & ANALYSIS, INC.
Specializing in Traffic Data Collection

Traffic Research & Analysis, Inc.
3844 East Indian School Road
Phoenix, AZ 85018
(602) 840-1500

Intersection ID: 1801291
Count Date: 5/2/2018

N 113TH AVE & US 60/GRAND AVE

	1034	1407

	North		East		South		West		
	App	Dep	App	Dep	App	Dep	App	Dep	Total
AM	0	0	1112	2308	191	161	2327	1161	3630
MID	0	0	0	0	0	0	0	0	0
PM	0	0	2655	1703	287	175	1745	2809	4687
Total	0	0	10677	11319	1407	1034	11539	11270	23623

	From North (SB)				From East (WB)				From South (NB)				From West (EB)				INTSEC
	NONE				US 60/GRAND AVE				N 113TH AVE				US 60/GRAND AVE				
20:15																	0
20:30																	0
20:45																	0
21:00																	0
21:15																	0
21:30																	0
21:45																	0
22:00																	0
22:15																	0
22:30																	0
22:45																	0
23:00																	0
23:15																	0
23:30																	0
23:45																	0
Total	0	0	0	0	317	####	0	14	924	0	483	0	0	####	717	0	23623
AM Peak Hr:																	6:45
Pk Vol	0	0	0	0	53	1056	0	3	105	0	86	0	0	2219	108	0	3630
PHF	n/a	n/a	n/a	n/a	0.736	0.910	n/a	0.750	0.772	n/a	0.935	n/a	n/a	0.908	0.692	n/a	0.942
MID Peak Hr:																	
Pk Vol																	0
PHF																	
PM Peak Hr:																	16:00
Pk Vol	0	0	0	0	52	2601	0	2	208	0	79	0	0	1622	123	0	4687
PHF	n/a	n/a	n/a	n/a	0.813	0.947	n/a	0.500	0.788	n/a	0.790	n/a	n/a	0.893	0.904	n/a	0.950

Comments

Unless shown otherwise, MID period defined as 10:00 AM - 2:00 PM. Peaks defined based on total intersection volume for all vehicle types.

TRAFFIC RESEARCH & ANALYSIS, INC.
Specializing in Traffic Data Collection

Traffic Research & Analysis, Inc.
3844 East Indian School Road
Phoenix, AZ 85018
(602) 840-1500

Intersection ID: 1801291
Count Date: 5/2/2018

N 113TH AVE & US 60/GRAND AVE

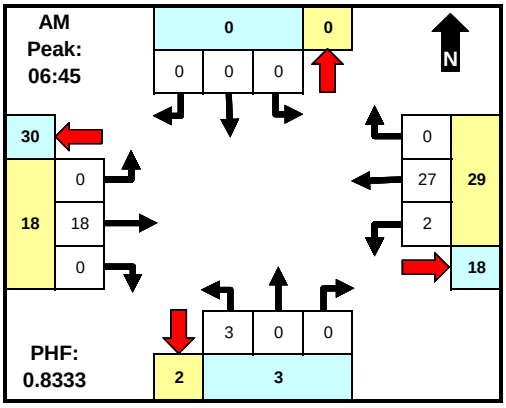

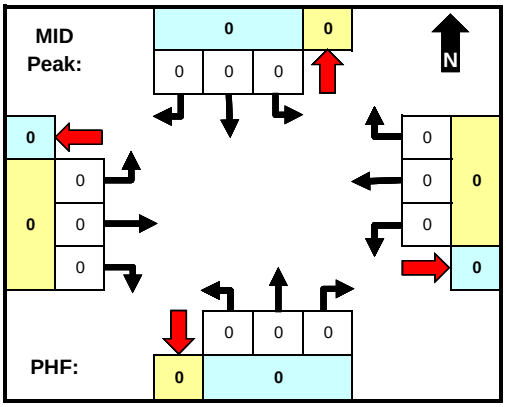

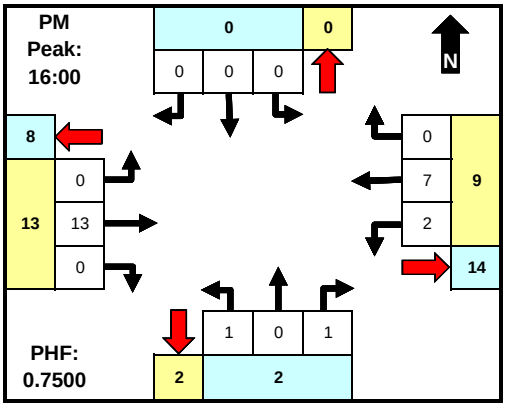

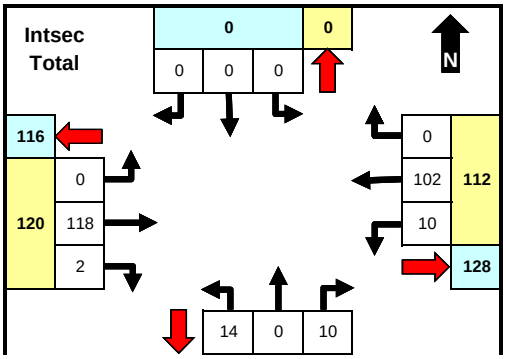

	From North (SB)				From East (WB)				From South (NB)				From West (EB)				INTSEC
	NONE				US 60/GRAND AVE				N 113TH AVE				US 60/GRAND AVE				
Time	LT	Thru	RT	U	LT	Thru	RT	U	LT	Thru	RT	U	LT	Thru	RT	U	TOTAL
0:00																	0
0:15																	0
0:30																	0
0:45																	0
1:00																	0
1:15																	0
1:30																	0
1:45																	0
2:00																	0
2:15																	0
2:30																	0
2:45																	0
3:00																	0
3:15																	0
3:30																	0
3:45																	0
4:00																	0
4:15																	0
4:30																	0
4:45																	0
5:00																	0
5:15																	0
5:30																	0
5:45																	0
6:00					0	6		0	0		0	0		5	0	0	11
6:15					2	4		0	1		1	0		8	0	0	16
6:30					0	8		0	1		1	0		8	0	0	18
6:45					1	6		0	1		0	0		6	0	0	14
7:00					0	8		0	1		0	0		2	0	0	11
7:15					1	9		0	0		0	0		5	0	0	15
7:30					0	4		0	1		0	0		5	0	0	10
7:45					3	4		0	1		0	0		4	0	0	12
8:00					0	4		0	1		0	0		5	0	0	10
8:15					0	3		0	4		0	0		6	0	0	13
8:30					0	9		0	1		1	0		6	0	0	17
8:45					0	3		0	0		0	0		5	0	0	8
9:00																	0
9:15																	0
9:30																	0
9:45																	0
10:00																	0
10:15																	0
10:30																	0
10:45																	0
11:00																	0
11:15																	0
11:30																	0
11:45																	0
12:00																	0
12:15																	0
12:30																	0
12:45																	0
13:00																	0
13:15																	0
13:30																	0
13:45																	0
14:00																	0
14:15																	0
14:30																	0
14:45																	0
15:00					0	2		0	0		3	0		13	1	0	19
15:15					1	4		0	0		2	0		11	0	0	18
15:30					0	6		0	0		0	0		6	1	0	13
15:45					0	5		0	1		0	0		4	0	0	10
16:00					2	2		0	0		1	0		3	0	0	8
16:15					0	3		0	0		0	0		4	0	0	7
16:30					0	1		0	0		0	0		3	0	0	4
16:45					0	1		0	1		0	0		3	0	0	5
17:00					0	2		0	0		0	0		2	0	0	4
17:15					0	1		0	0		1	0		1	0	0	3
17:30					0	5		0	0		0	0		0	0	0	5
17:45					0	2		0	0		0	0		3	0	0	5
18:00																	0
18:15																	0
18:30																	0
18:45																	0
19:00																	0
19:15																	0
19:30																	0
19:45																	0
20:00																	0

TRAFFIC RESEARCH & ANALYSIS, INC.
Specializing in Traffic Data Collection

Traffic Research & Analysis, Inc.
3844 East Indian School Road
Phoenix, AZ 85018
(602) 840-1500

Intersection ID: 1801291
Count Date: 5/2/2018

N 113TH AVE & US 60/GRAND AVE

	12	24	

	North		East		South		West		
	App	Dep	App	Dep	App	Dep	App	Dep	Total
AM	0	0	29	18	3	2	18	30	50
MID	0	0	0	0	0	0	0	0	0
PM	0	0	9	14	2	2	13	8	24
Total	0	0	112	128	24	12	120	116	256

	From North (SB)				From East (WB)				From South (NB)				From West (EB)				INTSEC
	NONE				US 60/GRAND AVE				N 113TH AVE				US 60/GRAND AVE				
20:15																	0
20:30																	0
20:45																	0
21:00																	0
21:15																	0
21:30																	0
21:45																	0
22:00																	0
22:15																	0
22:30																	0
22:45																	0
23:00																	0
23:15																	0
23:30																	0
23:45																	0
Total	0	0	0	0	10	102	0	0	14	0	10	0	0	118	2	0	256
AM Peak Hr:																	6:45
Pk Vol	0	0	0	0	2	27	0	0	3	0	0	0	0	18	0	0	50
PHF	n/a	n/a	n/a	n/a	0.500	0.750	n/a	n/a	0.750	n/a	n/a	n/a	n/a	0.750	n/a	n/a	0.833
MID Peak Hr:																	
Pk Vol																	0
PHF																	
PM Peak Hr:																	16:00
Pk Vol	0	0	0	0	2	7	0	0	1	0	1	0	0	13	0	0	24
PHF	n/a	n/a	n/a	n/a	0.250	0.583	n/a	n/a	0.250	n/a	0.250	n/a	n/a	0.813	n/a	n/a	0.750

Comments

Unless shown otherwise, MID period defined as 10:00 AM - 2:00 PM. Peaks defined based on total intersection volume for all vehicle types.

TRAFFIC RESEARCH & ANALYSIS, INC.
Specializing in Traffic Data Collection

Traffic Research & Analysis, Inc.
3844 East Indian School Road
Phoenix, AZ 85018
(602) 840-1500

Intersection ID: 1801291
Count Date: 5/2/2018

N 113TH AVE & US 60/GRAND AVE

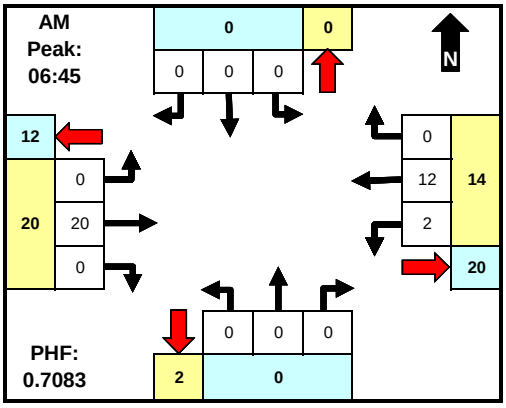

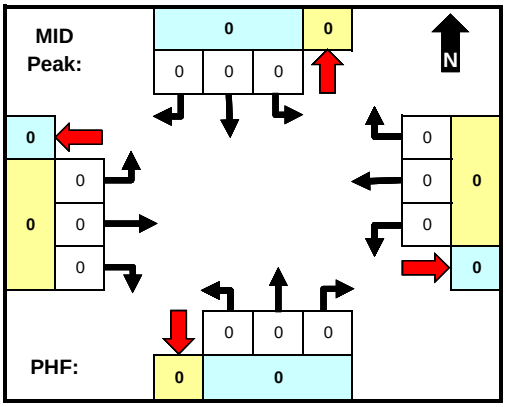

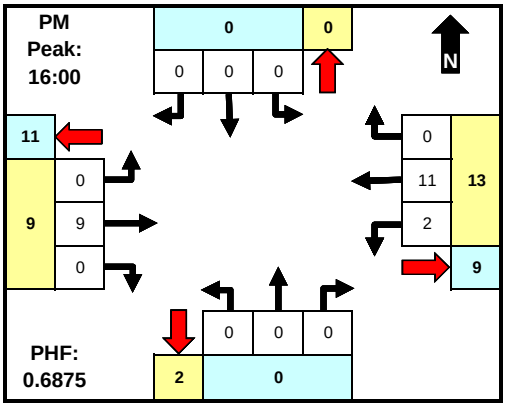

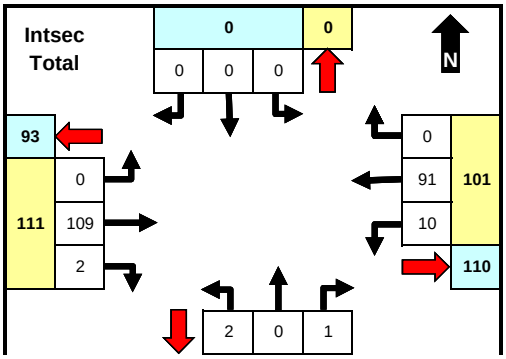

	From North (SB)				From East (WB)				From South (NB)				From West (EB)				INTSEC
	NONE				US 60/GRAND AVE				N 113TH AVE				US 60/GRAND AVE				
Time	LT	Thru	RT	U	LT	Thru	RT	U	LT	Thru	RT	U	LT	Thru	RT	U	TOTAL
0:00																	0
0:15																	0
0:30																	0
0:45																	0
1:00																	0
1:15																	0
1:30																	0
1:45																	0
2:00																	0
2:15																	0
2:30																	0
2:45																	0
3:00																	0
3:15																	0
3:30																	0
3:45																	0
4:00																	0
4:15																	0
4:30																	0
4:45																	0
5:00																	0
5:15																	0
5:30																	0
5:45																	0
6:00					0	4		0	1		0	0		12	0	0	17
6:15					2	6		0	1		0	0		10	0	0	19
6:30					0	7		0	0		0	0		8	0	0	15
6:45					1	3		0	0		0	0		2	0	0	6
7:00					0	4		0	0		0	0		4	0	0	8
7:15					1	3		0	0		0	0		8	0	0	12
7:30					0	2		0	0		0	0		6	0	0	8
7:45					3	1		0	0		0	0		5	0	0	9
8:00					0	4		0	0		0	0		3	0	0	7
8:15					0	5		0	0		0	0		4	0	0	9
8:30					0	5		0	0		0	0		7	0	0	12
8:45					0	7		0	0		0	0		5	0	0	12
9:00																	0
9:15																	0
9:30																	0
9:45																	0
10:00																	0
10:15																	0
10:30																	0
10:45																	0
11:00																	0
11:15																	0
11:30																	0
11:45																	0
12:00																	0
12:15																	0
12:30																	0
12:45																	0
13:00																	0
13:15																	0
13:30																	0
13:45																	0
14:00																	0
14:15																	0
14:30																	0
14:45																	0
15:00					0	9		0	0		0	0		7	1	0	17
15:15					1	1		0	0		0	0		2	0	0	4
15:30					0	2		0	0		0	0		0	1	0	3
15:45					0	9		0	0		0	0		3	0	0	12
16:00					2	3		0	0		0	0		3	0	0	8
16:15					0	3		0	0		0	0		1	0	0	4
16:30					0	3		0	0		0	0		3	0	0	6
16:45					0	2		0	0		0	0		2	0	0	4
17:00					0	1		0	0		0	0		4	0	0	5
17:15					0	0		0	0		1	0		3	0	0	4
17:30					0	3		0	0		0	0		3	0	0	6
17:45					0	4		0	0		0	0		4	0	0	8
18:00																	0
18:15																	0
18:30																	0
18:45																	0
19:00																	0
19:15																	0
19:30																	0
19:45																	0
20:00																	0

TRAFFIC RESEARCH & ANALYSIS, INC.
Specializing in Traffic Data Collection

Traffic Research & Analysis, Inc.
3844 East Indian School Road
Phoenix, AZ 85018
(602) 840-1500

Intersection ID: 1801291
Count Date: 5/2/2018

N 113TH AVE & US 60/GRAND AVE

	12	3	

	North		East		South		West		
	App	Dep	App	Dep	App	Dep	App	Dep	Total
AM	0	0	14	20	0	2	20	12	34
MID	0	0	0	0	0	0	0	0	0
PM	0	0	13	9	0	2	9	11	22
Total	0	0	101	110	3	12	111	93	215

	From North (SB)				From East (WB)				From South (NB)				From West (EB)				INTSEC
	NONE				US 60/GRAND AVE				N 113TH AVE				US 60/GRAND AVE				
20:15																	0
20:30																	0
20:45																	0
21:00																	0
21:15																	0
21:30																	0
21:45																	0
22:00																	0
22:15																	0
22:30																	0
22:45																	0
23:00																	0
23:15																	0
23:30																	0
23:45																	0
Total	0	0	0	0	10	91	0	0	2	0	1	0	0	109	2	0	215
AM Peak Hr:																	6:45
Pk Vol	0	0	0	0	2	12	0	0	0	0	0	0	0	20	0	0	34
PHF	n/a	n/a	n/a	n/a	0.500	0.750	n/a	n/a	n/a	n/a	n/a	n/a	n/a	0.625	n/a	n/a	0.708
MID Peak Hr:																	
Pk Vol																	0
PHF																	
PM Peak Hr:																	16:00
Pk Vol	0	0	0	0	2	11	0	0	0	0	0	0	0	9	0	0	22
PHF	n/a	n/a	n/a	n/a	0.250	0.917	n/a	n/a	n/a	n/a	n/a	n/a	n/a	0.750	n/a	n/a	0.688

Comments

Unless shown otherwise, MID period defined as 10:00 AM - 2:00 PM. Peaks defined based on total intersection volume for all vehicle types.

APPENDIX C

Synchro Results

Lane Group	EBT	WBL	WBT	NBL
Lane Configurations				
Traffic Volume (vph)	2331	62	1131	112
Future Volume (vph)	2331	62	1131	112
Turn Type	NA	Reserved	NA	Prot
Protected Phases	4	3	8	2
Permitted Phases		8		
Detector Phase	4	3	8	2
Switch Phase				
Minimum Initial (s)	7.0	7.0	7.0	7.0
Minimum Split (s)	23.8	12.8	23.8	24.6
Total Split (s)	77.0	13.1	90.1	29.9
Total Split (%)	64.2%	10.9%	75.1%	24.9%
Yellow Time (s)	4.3	4.3	4.3	4.3
All-Red Time (s)	1.5	1.5	1.5	2.3
Lost Time Adjust (s)	0.0	0.0	0.0	0.0
Total Lost Time (s)	5.8	5.8	5.8	6.6
Lead/Lag	Lag	Lead		
Lead-Lag Optimize?	Yes	Yes		
Recall Mode	None	None	None	C-Max
Act Effct Green (s)	71.4	81.8	81.8	25.8
Actuated g/C Ratio	0.60	0.68	0.68	0.22
v/c Ratio	0.88	0.41	0.36	0.56
Control Delay	25.2	32.3	13.5	43.6
Queue Delay	0.0	0.0	0.0	0.0
Total Delay	25.2	32.3	13.5	43.6
LOS	C	C	B	D
Approach Delay	25.2		14.5	43.6
Approach LOS	C		B	D

Intersection Summary	
Cycle Length: 120	
Actuated Cycle Length: 120	
Offset: 51 (43%), Referenced to phase 2:NBL and 6:, Start of Green	
Natural Cycle: 90	
Control Type: Actuated-Coordinated	
Maximum v/c Ratio: 0.88	
Intersection Signal Delay: 22.9	Intersection LOS: C
Intersection Capacity Utilization 73.5%	ICU Level of Service D
Analysis Period (min) 15	

Splits and Phases: 7: 113th Ave & Grand Ave

Lane Group	EBL	EBT	WBL	WBT	NBL	NBT	SBT
Lane Configurations							
Traffic Volume (vph)	174	2188	61	975	112	113	86
Future Volume (vph)	174	2188	61	975	112	113	86
Turn Type	Prot	NA	Prot	NA	Split	NA	NA
Protected Phases	7	4	3	8	2	2	6
Permitted Phases							
Detector Phase	7	4	3	8	2	2	6
Switch Phase							
Minimum Initial (s)	7.0	7.0	7.0	7.0	7.0	7.0	7.0
Minimum Split (s)	13.7	24.7	13.3	24.3	24.6	24.6	24.3
Total Split (s)	28.2	56.0	13.3	41.1	26.4	26.4	24.3
Total Split (%)	23.5%	46.7%	11.1%	34.3%	22.0%	22.0%	20.3%
Yellow Time (s)	4.3	4.3	4.3	4.3	4.3	4.3	4.3
All-Red Time (s)	2.4	2.4	2.0	2.0	2.3	2.3	2.0
Lost Time Adjust (s)	0.0	0.0	0.0	0.0	0.0	0.0	0.0
Total Lost Time (s)	6.7	6.7	6.3	6.3	6.6	6.6	6.3
Lead/Lag	Lead	Lag	Lead	Lag			
Lead-Lag Optimize?	Yes	Yes	Yes	Yes			
Recall Mode	None	None	None	None	C-Max	C-Max	Max
Act Effct Green (s)	17.3	52.0	7.0	39.0	19.8	19.8	18.0
Actuated g/C Ratio	0.14	0.43	0.06	0.32	0.16	0.16	0.15
v/c Ratio	0.73	1.10	0.66	0.67	0.42	0.37	0.35
Control Delay	74.1	68.0	101.9	12.6	49.9	24.9	29.3
Queue Delay	0.0	0.0	0.0	0.0	0.0	0.0	0.0
Total Delay	74.1	68.0	101.9	12.6	49.9	24.9	29.3
LOS	E	E	F	B	D	C	C
Approach Delay		68.5		17.7		33.5	29.3
Approach LOS		E		B		C	C

Intersection Summary	
Cycle Length: 120	
Actuated Cycle Length: 120	
Offset: 52 (43%), Referenced to phase 2:NBTL, Start of Green	
Natural Cycle: 130	
Control Type: Actuated-Coordinated	
Maximum v/c Ratio: 1.10	
Intersection Signal Delay: 50.4	Intersection LOS: D
Intersection Capacity Utilization 83.0%	ICU Level of Service E
Analysis Period (min) 15	

Splits and Phases: 11: 111th Ave & Grand Ave

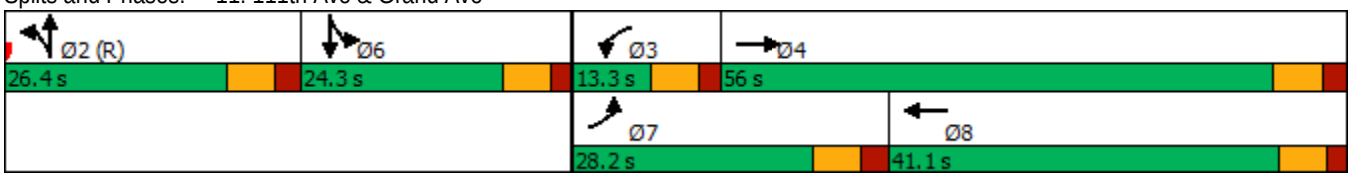

Lane Group	EBL	EBT	WBL	WBT	NBL	NBT	NBR	SBL	SBT
Lane Configurations									
Traffic Volume (vph)	195	1995	41	951	55	193	58	77	183
Future Volume (vph)	195	1995	41	951	55	193	58	77	183
Turn Type	Prot	NA	Prot	NA	Prot	NA	Perm	Prot	NA
Protected Phases	7	4	3	8	5	2		1	6
Permitted Phases							2		
Detector Phase	7	4	3	8	5	2	2	1	6
Switch Phase									
Minimum Initial (s)	7.0	7.0	5.0	7.0	5.0	7.0	7.0	5.0	7.0
Minimum Split (s)	14.3	25.3	12.0	25.0	11.7	24.7	24.7	11.5	24.5
Total Split (s)	31.4	64.0	12.0	44.6	15.6	28.0	28.0	16.0	28.4
Total Split (%)	26.2%	53.3%	10.0%	37.2%	13.0%	23.3%	23.3%	13.3%	23.7%
Yellow Time (s)	4.3	4.3	4.3	4.3	4.3	4.3	4.3	4.3	4.3
All-Red Time (s)	3.0	3.0	2.7	2.7	2.4	2.4	2.4	2.2	2.2
Lost Time Adjust (s)	0.0	0.0	0.0	0.0	0.0	0.0	0.0	0.0	0.0
Total Lost Time (s)	7.3	7.3	7.0	7.0	6.7	6.7	6.7	6.5	6.5
Lead/Lag	Lead	Lag	Lead	Lag	Lead	Lag	Lag	Lead	Lag
Lead-Lag Optimize?	Yes	Yes	Yes	Yes	Yes	Yes	Yes	Yes	Yes
Recall Mode	None	None	None	None	None	C-Max	C-Max	None	C-Max
Act Effct Green (s)	19.1	56.7	5.0	40.2	8.1	24.2	24.2	9.0	27.6
Actuated g/C Ratio	0.16	0.47	0.04	0.34	0.07	0.20	0.20	0.08	0.23
v/c Ratio	0.75	0.91	0.62	0.67	0.50	0.29	0.12	0.63	0.36
Control Delay	62.0	9.1	111.9	17.4	68.3	43.3	0.5	75.0	34.5
Queue Delay	0.0	0.0	0.0	0.0	0.0	0.0	0.0	0.0	0.0
Total Delay	62.0	9.1	111.9	17.4	68.3	43.3	0.5	75.0	34.5
LOS	E	A	F	B	E	D	A	E	C
Approach Delay		13.8		21.1		39.7			43.5
Approach LOS		B		C		D			D

Intersection Summary	
Cycle Length: 120	
Actuated Cycle Length: 120	
Offset: 22 (18%), Referenced to phase 2:NBT and 6:SBT, Start of Green	
Natural Cycle: 100	
Control Type: Actuated-Coordinated	
Maximum v/c Ratio: 0.91	
Intersection Signal Delay: 20.4	Intersection LOS: C
Intersection Capacity Utilization 78.0%	ICU Level of Service D
Analysis Period (min) 15	

Splits and Phases: 16: 107th Ave & Grand Ave

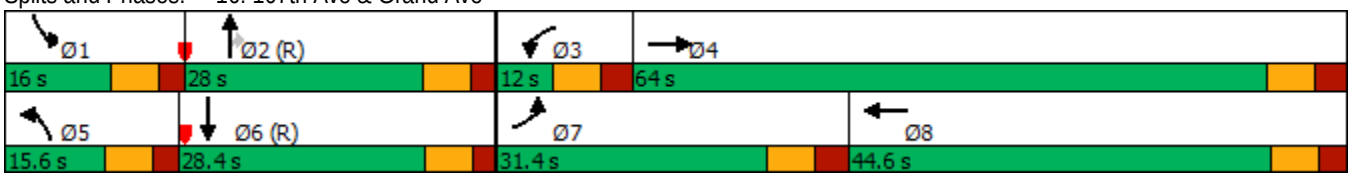

Lane Group	EBL	EBT	WBL	WBT	NBL	NBT	NBR	SBL	SBT
Lane Configurations									
Traffic Volume (vph)	144	1892	28	1057	28	134	32	41	107
Future Volume (vph)	144	1892	28	1057	28	134	32	41	107
Turn Type	Prot	NA	Prot	NA	Prot	NA	Perm	Prot	NA
Protected Phases	7	4	3	8	5	2		1	6
Permitted Phases							2		
Detector Phase	7	4	3	8	5	2	2	1	6
Switch Phase									
Minimum Initial (s)	7.0	7.0	7.0	7.0	5.0	7.0	7.0	5.0	7.0
Minimum Split (s)	13.1	24.1	13.4	24.4	11.5	24.5	24.5	11.5	24.5
Total Split (s)	25.2	65.0	13.6	53.4	13.0	26.0	26.0	15.4	28.4
Total Split (%)	21.0%	54.2%	11.3%	44.5%	10.8%	21.7%	21.7%	12.8%	23.7%
Yellow Time (s)	4.3	4.3	4.3	4.3	4.3	4.3	4.3	4.3	4.3
All-Red Time (s)	1.8	1.8	2.1	2.1	2.2	2.2	2.2	2.2	2.2
Lost Time Adjust (s)	0.0	0.0	0.0	0.0	0.0	0.0	0.0	0.0	0.0
Total Lost Time (s)	6.1	6.1	6.4	6.4	6.5	6.5	6.5	6.5	6.5
Lead/Lag	Lead	Lag	Lead	Lag	Lead	Lag	Lag	Lead	Lag
Lead-Lag Optimize?	Yes	Yes	Yes	Yes	Yes	Yes	Yes	Yes	Yes
Recall Mode	None	None	None	None	None	C-Max	C-Max	None	C-Max
Act Effct Green (s)	15.3	58.2	7.1	44.6	6.3	29.2	29.2	7.8	33.3
Actuated g/C Ratio	0.13	0.48	0.06	0.37	0.05	0.24	0.24	0.06	0.28
v/c Ratio	0.69	0.84	0.29	0.73	0.33	0.32	0.06	0.39	0.19
Control Delay	85.2	5.4	69.8	13.8	64.4	44.2	0.2	63.6	25.1
Queue Delay	0.0	0.0	0.0	0.0	0.0	0.0	0.0	0.0	0.0
Total Delay	85.2	5.4	69.8	13.8	64.4	44.2	0.2	63.6	25.1
LOS	F	A	E	B	E	D	A	E	C
Approach Delay		11.0		15.1		39.8			32.7
Approach LOS		B		B		D			C

Intersection Summary	
Cycle Length: 120	
Actuated Cycle Length: 120	
Offset: 80 (67%), Referenced to phase 2:NBT and 6:SBT, Start of Green	
Natural Cycle: 90	
Control Type: Actuated-Coordinated	
Maximum v/c Ratio: 0.84	
Intersection Signal Delay: 15.1	Intersection LOS: B
Intersection Capacity Utilization 75.3%	ICU Level of Service D
Analysis Period (min) 15	

Splits and Phases: 20: 103rd Ave & Grand Ave

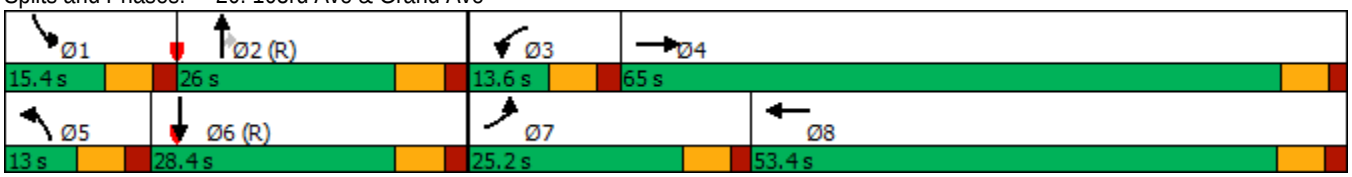

Lane Group	EBL	EBT	WBL	WBT	NBL	NBT	NBR	SBL	SBT	SBR
Lane Configurations										
Traffic Volume (vph)	277	1512	21	1198	72	400	38	154	181	115
Future Volume (vph)	277	1512	21	1198	72	400	38	154	181	115
Turn Type	Prot	NA	Prot	NA	Prot	NA	Perm	Prot	NA	Perm
Protected Phases	7	4	3	8	5	2		1	6	
Permitted Phases							2			6
Detector Phase	7	4	3	8	5	2	2	1	6	6
Switch Phase										
Minimum Initial (s)	7.0	7.0	7.0	7.0	5.0	7.0	7.0	5.0	7.0	7.0
Minimum Split (s)	13.6	24.6	13.6	24.6	11.4	24.4	24.4	11.4	24.4	24.4
Total Split (s)	28.1	61.5	13.6	47.0	18.3	25.9	25.9	19.0	26.6	26.6
Total Split (%)	23.4%	51.3%	11.3%	39.2%	15.3%	21.6%	21.6%	15.8%	22.2%	22.2%
Yellow Time (s)	4.3	4.3	4.3	4.3	4.3	4.3	4.3	4.3	4.3	4.3
All-Red Time (s)	2.3	2.3	2.3	2.3	2.1	2.1	2.1	2.1	2.1	2.1
Lost Time Adjust (s)	0.0	0.0	0.0	0.0	0.0	0.0	0.0	0.0	0.0	0.0
Total Lost Time (s)	6.6	6.6	6.6	6.6	6.4	6.4	6.4	6.4	6.4	6.4
Lead/Lag	Lead	Lag	Lead	Lag	Lead	Lag	Lag	Lead	Lag	Lag
Lead-Lag Optimize?	Yes	Yes	Yes	Yes	Yes	Yes	Yes	Yes	Yes	Yes
Recall Mode	None	None	None	None	None	C-Max	C-Max	None	C-Max	C-Max
Act Effct Green (s)	21.5	60.3	7.0	40.4	10.0	19.5	19.5	12.6	24.7	24.7
Actuated g/C Ratio	0.18	0.50	0.06	0.34	0.08	0.16	0.16	0.10	0.21	0.21
v/c Ratio	0.96	0.67	0.23	1.02	0.54	0.77	0.10	0.92	0.28	0.26
Control Delay	82.4	6.7	59.7	64.0	65.8	57.8	0.4	102.7	43.2	1.3
Queue Delay	0.0	0.0	0.0	0.0	0.0	0.0	0.0	0.0	0.0	0.0
Total Delay	82.4	6.7	59.7	64.0	65.8	57.8	0.4	102.7	43.2	1.3
LOS	F	A	E	E	E	E	A	F	D	A
Approach Delay		18.1		63.9		54.6			52.9	
Approach LOS		B		E		D			D	

Intersection Summary	
Cycle Length: 120	
Actuated Cycle Length: 120	
Offset: 34 (28%), Referenced to phase 2:NBT and 6:SBT, Start of Green	
Natural Cycle: 120	
Control Type: Actuated-Coordinated	
Maximum v/c Ratio: 1.02	
Intersection Signal Delay: 42.4	Intersection LOS: D
Intersection Capacity Utilization 87.4%	ICU Level of Service E
Analysis Period (min) 15	

Splits and Phases: 25: 99th Ave & Grand Ave

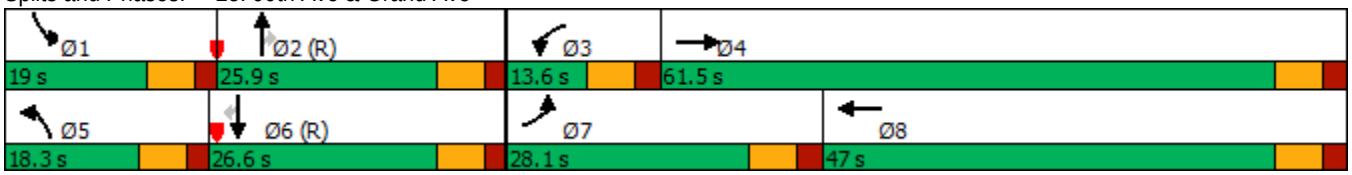

Lane Group	EBT	WBL	WBT
Lane Configurations			
Traffic Volume (vph)	1501	98	1653
Future Volume (vph)	1501	98	1653
Turn Type	NA	Prot	NA
Protected Phases	4	3	8
Permitted Phases			
Detector Phase	4	3	8
Switch Phase			
Minimum Initial (s)	7.0	7.0	7.0
Minimum Split (s)	23.8	12.8	23.8
Total Split (s)	91.0	19.0	110.0
Total Split (%)	82.7%	17.3%	100.0%
Yellow Time (s)	4.3	4.3	4.3
All-Red Time (s)	1.5	1.5	1.5
Lost Time Adjust (s)	0.0	0.0	0.0
Total Lost Time (s)	5.8	5.8	5.8
Lead/Lag	Lag	Lead	
Lead-Lag Optimize?	Yes	Yes	
Recall Mode	None	None	None
Act Effct Green (s)	89.5	8.9	110.0
Actuated g/C Ratio	0.81	0.08	1.00
v/c Ratio	0.51	0.39	0.36
Control Delay	3.5	47.7	1.3
Queue Delay	0.0	0.0	0.0
Total Delay	3.5	47.7	1.3
LOS	A	D	A
Approach Delay	3.5		3.9
Approach LOS	A		A

Intersection Summary	
Cycle Length: 110	
Actuated Cycle Length: 110	
Offset: 37 (34%), Referenced to phase 2: and 6:, Start of Green	
Natural Cycle: 40	
Control Type: Actuated-Coordinated	
Maximum v/c Ratio: 0.51	
Intersection Signal Delay: 3.7	Intersection LOS: A
Intersection Capacity Utilization 84.2%	ICU Level of Service E
Analysis Period (min) 15	

Splits and Phases: 30: SR-101L On Ramp

Lane Group	EBT	WBT	NBL	NBR
Lane Configurations				
Traffic Volume (vph)	1476	1150	614	152
Future Volume (vph)	1476	1150	614	152
Turn Type	NA	NA	Prot	Perm
Protected Phases	4	8	2	
Permitted Phases				2
Detector Phase	4	8	2	2
Switch Phase				
Minimum Initial (s)	7.0	7.0	7.0	7.0
Minimum Split (s)	24.3	23.8	24.6	24.6
Total Split (s)	63.0	63.0	47.0	47.0
Total Split (%)	57.3%	57.3%	42.7%	42.7%
Yellow Time (s)	4.3	4.3	4.3	4.3
All-Red Time (s)	2.0	1.5	2.3	2.3
Lost Time Adjust (s)	0.0	0.0	0.0	0.0
Total Lost Time (s)	6.3	5.8	6.6	6.6
Lead/Lag				
Lead-Lag Optimize?				
Recall Mode	None	None	C-Max	C-Max
Act Effct Green (s)	47.7	48.2	49.4	49.4
Actuated g/C Ratio	0.43	0.44	0.45	0.45
v/c Ratio	0.73	0.39	0.44	0.23
Control Delay	24.3	20.9	23.0	19.3
Queue Delay	0.2	0.0	0.0	0.0
Total Delay	24.4	20.9	23.0	19.3
LOS	C	C	C	B
Approach Delay	24.4	20.9	22.3	
Approach LOS	C	C	C	

Intersection Summary	
Cycle Length: 110	
Actuated Cycle Length: 110	
Offset: 96 (87%), Referenced to phase 2:NBL and 6:, Start of Green	
Natural Cycle: 50	
Control Type: Actuated-Coordinated	
Maximum v/c Ratio: 0.73	
Intersection Signal Delay: 22.7	Intersection LOS: C
Intersection Capacity Utilization 84.2%	ICU Level of Service E
Analysis Period (min) 15	

Splits and Phases: 34: SR-101L Off Ramp

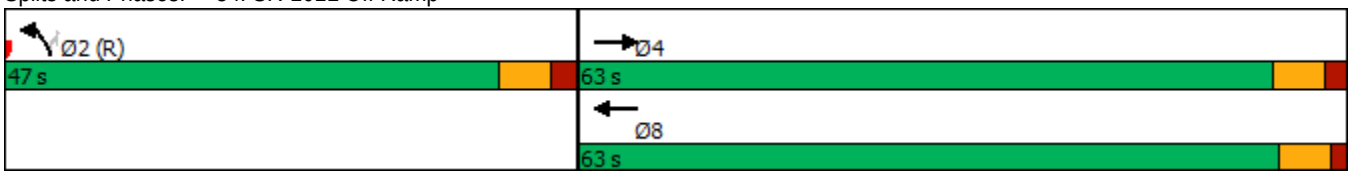

Lane Group	EBL	EBT	WBL	WBT	WBR	NBL	NBT	SBL	SBT	SBR
Lane Configurations										
Traffic Volume (vph)	487	987	35	649	249	94	367	237	134	536
Future Volume (vph)	487	987	35	649	249	94	367	237	134	536
Turn Type	Prot	NA	Prot	NA	Perm	Prot	NA	Prot	NA	pm+ov
Protected Phases	7	4	3	8		5	2	1	6	7
Permitted Phases					8					6
Detector Phase	7	4	3	8	8	5	2	1	6	7
Switch Phase										
Minimum Initial (s)	7.0	7.0	7.0	7.0	7.0	5.0	7.0	5.0	7.0	7.0
Minimum Split (s)	13.7	24.7	13.3	24.3	24.3	11.9	24.9	11.7	26.5	13.7
Total Split (s)	31.0	44.7	13.3	27.0	27.0	20.5	31.0	31.0	41.5	31.0
Total Split (%)	25.8%	37.3%	11.1%	22.5%	22.5%	17.1%	25.8%	25.8%	34.6%	25.8%
Yellow Time (s)	4.3	4.3	4.3	4.3	4.3	4.3	4.3	4.3	4.3	4.3
All-Red Time (s)	2.4	2.4	2.0	2.0	2.0	2.6	2.6	2.4	2.4	2.4
Lost Time Adjust (s)	0.0	0.0	0.0	0.0	0.0	0.0	0.0	0.0	0.0	0.0
Total Lost Time (s)	6.7	6.7	6.3	6.3	6.3	6.9	6.9	6.7	6.7	6.7
Lead/Lag	Lead	Lag	Lead	Lag	Lag	Lead	Lag	Lead	Lag	Lead
Lead-Lag Optimize?	Yes	Yes	Yes	Yes	Yes	Yes	Yes	Yes	Yes	Yes
Recall Mode	None	None	None	None	None	None	C-Max	None	C-Max	None
Act Effct Green (s)	22.8	41.6	7.0	20.5	20.5	11.5	28.7	21.4	38.6	68.1
Actuated g/C Ratio	0.19	0.35	0.06	0.17	0.17	0.10	0.24	0.18	0.32	0.57
v/c Ratio	0.81	0.64	0.37	0.82	0.55	0.61	0.57	0.83	0.25	0.61
Control Delay	57.2	35.3	65.2	56.7	9.2	67.4	43.3	56.8	42.7	22.9
Queue Delay	0.0	0.0	0.0	0.0	0.0	0.0	0.0	0.0	0.0	0.0
Total Delay	57.2	35.3	65.2	56.7	9.2	67.4	43.3	56.8	42.7	22.9
LOS	E	D	E	E	A	E	D	E	D	C
Approach Delay		42.3		44.3			47.6		34.7	
Approach LOS		D		D			D		C	

Intersection Summary	
Cycle Length: 120	
Actuated Cycle Length: 120	
Offset: 93 (78%), Referenced to phase 2:NBT and 6:SBT, Start of Green	
Natural Cycle: 90	
Control Type: Actuated-Coordinated	
Maximum v/c Ratio: 0.83	
Intersection Signal Delay: 41.7	Intersection LOS: D
Intersection Capacity Utilization 73.9%	ICU Level of Service D
Analysis Period (min) 15	

Splits and Phases: 37: 91st Ave & Grand Ave

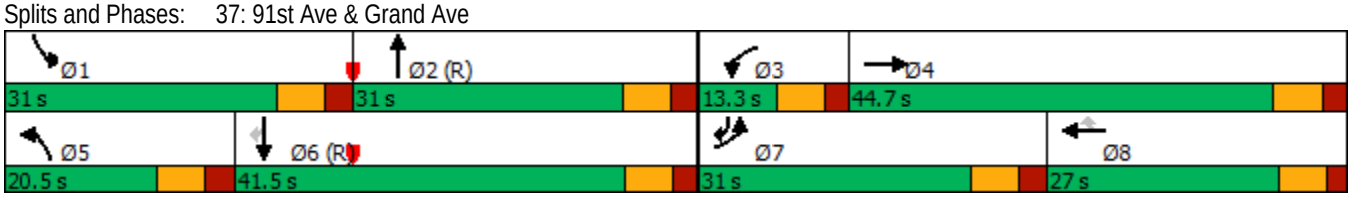

Lane Group	EBL	EBT	WBL	WBT	WBR	NBL	NBT	NBR	SBL	SBT
Lane Configurations										
Traffic Volume (vph)	34	12	199	8	111	59	829	131	72	586
Future Volume (vph)	34	12	199	8	111	59	829	131	72	586
Turn Type	Prot	NA	Prot	NA	Perm	Prot	NA	Perm	Prot	NA
Protected Phases	7	4	3	8		5	2		1	6
Permitted Phases					8			2		
Detector Phase	7	4	3	8	8	5	2	2	1	6
Switch Phase										
Minimum Initial (s)	5.0	7.0	5.0	7.0	7.0	5.0	7.0	7.0	7.0	7.0
Minimum Split (s)	11.3	24.3	11.1	27.1	27.1	11.1	24.1	24.1	12.8	23.8
Total Split (s)	14.0	25.0	24.0	35.0	35.0	17.0	52.0	52.0	19.0	54.0
Total Split (%)	11.7%	20.8%	20.0%	29.2%	29.2%	14.2%	43.3%	43.3%	15.8%	45.0%
Yellow Time (s)	4.3	4.3	4.3	4.3	4.3	4.3	4.3	4.3	4.3	4.3
All-Red Time (s)	2.0	2.0	1.8	1.8	1.8	1.8	1.8	1.8	1.5	1.5
Lost Time Adjust (s)	0.0	0.0	0.0	0.0	0.0	0.0	0.0	0.0	0.0	0.0
Total Lost Time (s)	6.3	6.3	6.1	6.1	6.1	6.1	6.1	6.1	5.8	5.8
Lead/Lag	Lead	Lag	Lead	Lag	Lag	Lead	Lag	Lag	Lead	Lag
Lead-Lag Optimize?	Yes	Yes	Yes	Yes	Yes	Yes	Yes	Yes	Yes	Yes
Recall Mode	None	None	None	None	None	None	C-Max	C-Max	None	C-Max
Act Effct Green (s)	7.1	19.4	13.3	13.3	30.6	9.7	54.8	54.8	10.8	55.7
Actuated g/C Ratio	0.06	0.16	0.11	0.11	0.26	0.08	0.46	0.46	0.09	0.46
v/c Ratio	0.36	0.29	0.62	0.62	0.24	0.45	0.56	0.17	0.50	0.42
Control Delay	63.9	16.7	64.8	64.8	6.0	78.4	8.7	0.5	62.2	22.7
Queue Delay	0.0	0.0	0.0	0.0	0.0	0.0	0.0	0.0	0.0	0.0
Total Delay	63.9	16.7	64.8	64.8	6.0	78.4	8.7	0.5	62.2	22.7
LOS	E	B	E	E	A	E	A	A	E	C
Approach Delay		29.9		44.2			11.7			26.8
Approach LOS		C		D			B			C

Intersection Summary	
Cycle Length: 120	
Actuated Cycle Length: 120	
Offset: 0 (0%), Referenced to phase 2:NBT and 6:SBT, Start of Green	
Natural Cycle: 80	
Control Type: Actuated-Coordinated	
Maximum v/c Ratio: 0.62	
Intersection Signal Delay: 22.4	Intersection LOS: C
Intersection Capacity Utilization 56.1%	ICU Level of Service B
Analysis Period (min) 15	

Splits and Phases: 42: Cactus Rd & 91st Ave

Lane Group	EBT	WBL	WBT	NBL
Lane Configurations				
Traffic Volume (vph)	1698	60	2705	216
Future Volume (vph)	1698	60	2705	216
Turn Type	NA	Reserved	NA	Prot
Protected Phases	4	3	8	2
Permitted Phases		8		
Detector Phase	4	3	8	2
Switch Phase				
Minimum Initial (s)	7.0	5.0	7.0	7.0
Minimum Split (s)	23.8	10.3	23.8	24.6
Total Split (s)	64.0	12.0	76.0	34.0
Total Split (%)	58.2%	10.9%	69.1%	30.9%
Yellow Time (s)	4.3	4.3	4.3	4.3
All-Red Time (s)	1.5	1.0	1.5	2.3
Lost Time Adjust (s)	0.0	0.0	0.0	0.0
Total Lost Time (s)	5.8	5.3	5.8	6.6
Lead/Lag	Lag	Lead		
Lead-Lag Optimize?	Yes	Yes		
Recall Mode	None	None	None	C-Max
Act Effct Green (s)	60.7	70.7	70.2	27.4
Actuated g/C Ratio	0.55	0.64	0.64	0.25
v/c Ratio	0.71	0.38	0.90	0.73
Control Delay	20.3	14.9	21.7	46.4
Queue Delay	0.0	0.0	0.0	0.0
Total Delay	20.3	14.9	21.7	46.4
LOS	C	B	C	D
Approach Delay	20.3		21.5	46.4
Approach LOS	C		C	D

Intersection Summary	
Cycle Length: 110	
Actuated Cycle Length: 110	
Offset: 0 (0%), Referenced to phase 2:NBL and 6:, Start of Green	
Natural Cycle: 80	
Control Type: Actuated-Coordinated	
Maximum v/c Ratio: 0.90	
Intersection Signal Delay: 22.6	Intersection LOS: C
Intersection Capacity Utilization 79.6%	ICU Level of Service D
Analysis Period (min) 15	

Splits and Phases: 7: 113th Ave & Grand Ave

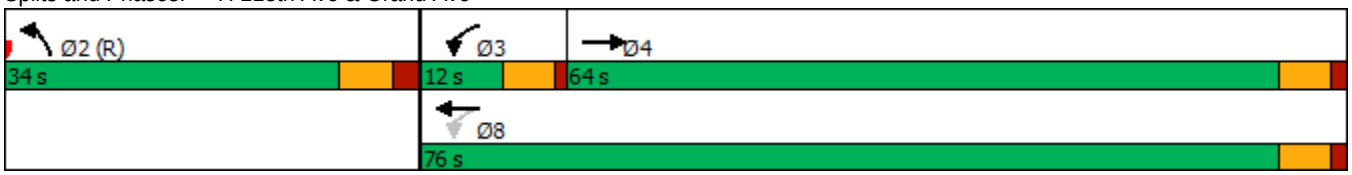

Lane Group	EBL	EBT	WBL	WBT	NBL	NBT	SBT	Ø1
Lane Configurations								
Traffic Volume (vph)	107	1488	75	2006	215	115	101	
Future Volume (vph)	107	1488	75	2006	215	115	101	
Turn Type	Prot	NA	Prot	NA	Prot	NA	NA	
Protected Phases	7	4	3	8	5	2	6	1
Permitted Phases								
Detector Phase	7	4	3	8	5	2	6	
Switch Phase								
Minimum Initial (s)	7.0	7.0	7.0	7.0	5.0	7.0	7.0	5.0
Minimum Split (s)	13.7	24.7	13.3	24.3	11.6	24.6	24.3	11.3
Total Split (s)	14.0	49.6	13.4	49.0	21.0	45.7	36.0	11.3
Total Split (%)	11.7%	41.3%	11.2%	40.8%	17.5%	38.1%	30.0%	9%
Yellow Time (s)	4.3	4.3	4.3	4.3	4.3	4.3	4.3	4.3
All-Red Time (s)	2.4	2.4	2.0	2.0	2.3	2.3	2.0	2.0
Lost Time Adjust (s)	0.0	0.0	0.0	0.0	0.0	0.0	0.0	
Total Lost Time (s)	6.7	6.7	6.3	6.3	6.6	6.6	6.3	
Lead/Lag	Lead	Lag	Lead	Lag	Lead	Lag	Lag	Lead
Lead-Lag Optimize?	Yes	Yes	Yes	Yes	Yes	Yes	Yes	Yes
Recall Mode	None	None	None	None	None	C-Max	C-Max	None
Act Effct Green (s)	7.3	42.9	7.1	42.7	14.4	50.4	29.7	
Actuated g/C Ratio	0.06	0.36	0.06	0.36	0.12	0.42	0.25	
v/c Ratio	1.07	0.94	0.78	1.20	1.10	0.16	2.32dr	
Control Delay	160.9	48.8	88.5	118.2	141.0	11.9	162.7	
Queue Delay	0.0	0.0	0.0	0.0	0.0	0.0	0.0	
Total Delay	160.9	48.8	88.5	118.2	141.0	11.9	162.7	
LOS	F	D	F	F	F	B	F	
Approach Delay		55.9		117.2		77.3	162.7	
Approach LOS		E		F		E	F	

Intersection Summary	
Cycle Length: 120	
Actuated Cycle Length: 120	
Offset: 80 (67%), Referenced to phase 2:NBT and 6:SBT, Start of Green	
Natural Cycle: 150	
Control Type: Actuated-Coordinated	
Maximum v/c Ratio: 1.26	
Intersection Signal Delay: 95.8	Intersection LOS: F
Intersection Capacity Utilization 92.7%	ICU Level of Service F
Analysis Period (min) 15	

dr Defacto Right Lane. Recode with 1 though lane as a right lane.

Splits and Phases: 11: 111th Ave & Grand Ave

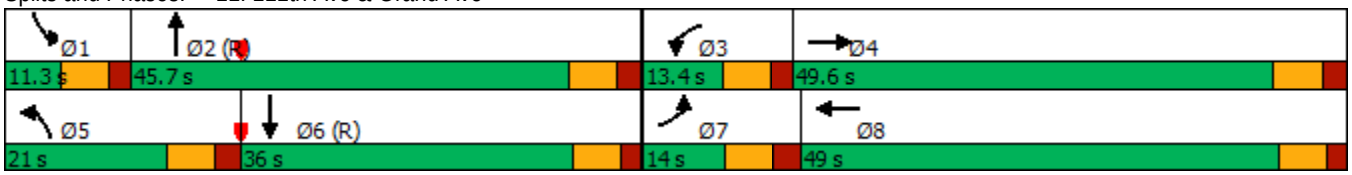

Lane Group	EBL	EBT	WBL	WBT	NBL	NBT	NBR	SBL	SBT
Lane Configurations									
Traffic Volume (vph)	82	1471	60	1761	135	207	50	116	245
Future Volume (vph)	82	1471	60	1761	135	207	50	116	245
Turn Type	Prot	NA	Prot	NA	Prot	NA	Perm	Prot	NA
Protected Phases	7	4	3	8	5	2		1	6
Permitted Phases							2		
Detector Phase	7	4	3	8	5	2	2	1	6
Switch Phase									
Minimum Initial (s)	7.0	7.0	7.0	7.0	5.0	7.0	7.0	5.0	7.0
Minimum Split (s)	14.3	25.3	14.0	25.0	11.7	24.7	24.7	11.5	24.5
Total Split (s)	16.8	55.8	17.0	56.0	20.8	28.4	28.4	18.8	26.4
Total Split (%)	14.0%	46.5%	14.2%	46.7%	17.3%	23.7%	23.7%	15.7%	22.0%
Yellow Time (s)	4.3	4.3	4.3	4.3	4.3	4.3	4.3	4.3	4.3
All-Red Time (s)	3.0	3.0	2.7	2.7	2.4	2.4	2.4	2.2	2.2
Lost Time Adjust (s)	0.0	0.0	0.0	0.0	0.0	0.0	0.0	0.0	0.0
Total Lost Time (s)	7.3	7.3	7.0	7.0	6.7	6.7	6.7	6.5	6.5
Lead/Lag	Lead	Lag	Lead	Lag	Lead	Lag	Lag	Lead	Lag
Lead-Lag Optimize?	Yes	Yes	Yes	Yes	Yes	Yes	Yes	Yes	Yes
Recall Mode	None	None	None	None	None	C-Max	C-Max	None	C-Max
Act Effct Green (s)	9.0	52.3	9.0	49.5	13.1	22.5	22.5	11.5	20.9
Actuated g/C Ratio	0.08	0.44	0.08	0.41	0.11	0.19	0.19	0.10	0.17
v/c Ratio	0.67	0.74	0.49	0.94	0.76	0.34	0.12	0.73	0.73
Control Delay	86.2	5.0	85.9	12.6	75.9	44.2	0.6	76.4	37.5
Queue Delay	0.0	0.0	0.0	0.0	0.0	0.0	0.0	0.0	0.0
Total Delay	86.2	5.0	85.9	12.6	75.9	44.2	0.6	76.4	37.5
LOS	F	A	F	B	E	D	A	E	D
Approach Delay		9.2		14.9		49.6			45.0
Approach LOS		A		B		D			D

Intersection Summary	
Cycle Length: 120	
Actuated Cycle Length: 120	
Offset: 19 (16%), Referenced to phase 2:NBT and 6:SBT, Start of Green	
Natural Cycle: 90	
Control Type: Actuated-Coordinated	
Maximum v/c Ratio: 0.94	
Intersection Signal Delay: 20.0	Intersection LOS: C
Intersection Capacity Utilization 86.0%	ICU Level of Service E
Analysis Period (min) 15	

Splits and Phases: 16: 107th Ave & Grand Ave

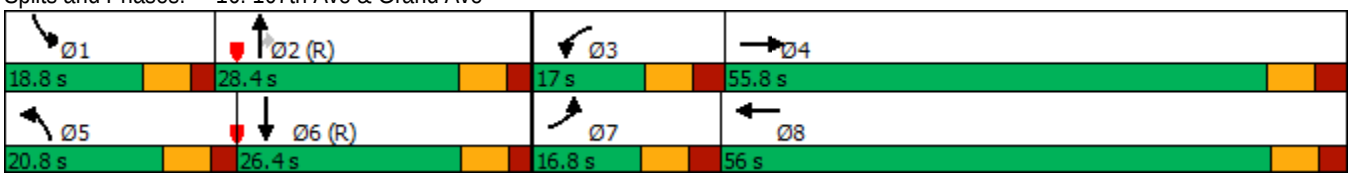

Lane Group	EBL	EBT	WBL	WBT	NBL	NBT	NBR	SBL	SBT
Lane Configurations									
Traffic Volume (vph)	69	1554	29	1839	41	104	49	142	133
Future Volume (vph)	69	1554	29	1839	41	104	49	142	133
Turn Type	Prot	NA	Prot	NA	Prot	NA	Perm	Prot	NA
Protected Phases	7	4	3	8	5	2		1	6
Permitted Phases							2		
Detector Phase	7	4	3	8	5	2	2	1	6
Switch Phase									
Minimum Initial (s)	5.0	7.0	5.0	7.0	5.0	7.0	7.0	5.0	7.0
Minimum Split (s)	11.1	24.1	11.4	24.4	11.5	24.5	24.5	11.5	24.5
Total Split (s)	14.6	59.9	12.9	58.2	15.2	26.2	26.2	21.0	32.0
Total Split (%)	12.2%	49.9%	10.8%	48.5%	12.7%	21.8%	21.8%	17.5%	26.7%
Yellow Time (s)	4.3	4.3	4.3	4.3	4.3	4.3	4.3	4.3	4.3
All-Red Time (s)	1.8	1.8	2.1	2.1	2.2	2.2	2.2	2.2	2.2
Lost Time Adjust (s)	0.0	0.0	0.0	0.0	0.0	0.0	0.0	0.0	0.0
Total Lost Time (s)	6.1	6.1	6.4	6.4	6.5	6.5	6.5	6.5	6.5
Lead/Lag	Lead	Lag	Lead	Lag	Lead	Lag	Lag	Lead	Lag
Lead-Lag Optimize?	Yes	Yes	Yes	Yes	Yes	Yes	Yes	Yes	Yes
Recall Mode	None	None	None	None	None	C-Max	C-Max	None	C-Max
Act Effct Green (s)	8.1	56.3	6.3	52.1	7.7	23.3	23.3	13.5	31.5
Actuated g/C Ratio	0.07	0.47	0.05	0.43	0.06	0.19	0.19	0.11	0.26
v/c Ratio	0.63	0.71	0.34	0.93	0.40	0.31	0.12	0.77	0.29
Control Delay	98.6	7.2	80.7	10.7	64.0	46.5	0.6	76.3	20.9
Queue Delay	0.0	0.0	0.0	0.0	0.0	0.0	0.0	0.0	0.0
Total Delay	98.6	7.2	80.7	10.7	64.0	46.5	0.6	76.3	20.9
LOS	F	A	F	B	E	D	A	E	C
Approach Delay		11.0		11.8		38.7			40.7
Approach LOS		B		B		D			D

Intersection Summary	
Cycle Length: 120	
Actuated Cycle Length: 120	
Offset: 93 (78%), Referenced to phase 2:NBT and 6:SBT, Start of Green	
Natural Cycle: 90	
Control Type: Actuated-Coordinated	
Maximum v/c Ratio: 0.93	
Intersection Signal Delay: 15.5	Intersection LOS: B
Intersection Capacity Utilization 76.0%	ICU Level of Service D
Analysis Period (min) 15	

Splits and Phases: 20: 103rd Ave & Grand Ave

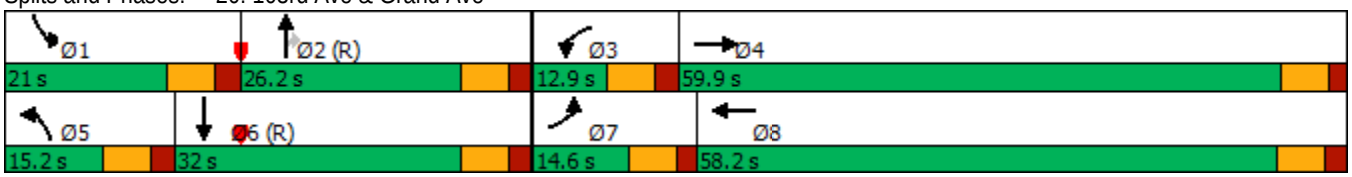

Lane Group	EBL	EBT	WBL	WBT	NBL	NBT	NBR	SBL	SBT	SBR
Lane Configurations										
Traffic Volume (vph)	136	1515	80	1683	63	245	51	186	367	161
Future Volume (vph)	136	1515	80	1683	63	245	51	186	367	161
Turn Type	Prot	NA	Prot	NA	Prot	NA	Perm	Prot	NA	Perm
Protected Phases	7	4	3	8	5	2		1	6	
Permitted Phases							2			6
Detector Phase	7	4	3	8	5	2	2	1	6	6
Switch Phase										
Minimum Initial (s)	5.0	7.0	5.0	7.0	5.0	7.0	7.0	5.0	7.0	7.0
Minimum Split (s)	11.6	24.6	11.6	24.6	11.4	24.4	24.4	11.4	24.4	24.4
Total Split (s)	18.0	57.2	15.8	55.0	16.5	25.4	25.4	21.6	30.5	30.5
Total Split (%)	15.0%	47.7%	13.2%	45.8%	13.8%	21.2%	21.2%	18.0%	25.4%	25.4%
Yellow Time (s)	4.3	4.3	4.3	4.3	4.3	4.3	4.3	4.3	4.3	4.3
All-Red Time (s)	2.3	2.3	2.3	2.3	2.1	2.1	2.1	2.1	2.1	2.1
Lost Time Adjust (s)	0.0	0.0	0.0	0.0	0.0	0.0	0.0	0.0	0.0	0.0
Total Lost Time (s)	6.6	6.6	6.6	6.6	6.4	6.4	6.4	6.4	6.4	6.4
Lead/Lag	Lead	Lag	Lead	Lag	Lead	Lag	Lag	Lead	Lag	Lag
Lead-Lag Optimize?	Yes	Yes	Yes	Yes	Yes	Yes	Yes	Yes	Yes	Yes
Recall Mode	None	None	None	None	None	C-Max	C-Max	None	C-Max	C-Max
Act Effct Green (s)	11.4	51.0	8.8	48.4	8.9	19.1	19.1	15.1	27.8	27.8
Actuated g/C Ratio	0.10	0.42	0.07	0.40	0.07	0.16	0.16	0.13	0.23	0.23
v/c Ratio	0.88	0.80	0.66	1.00	0.52	0.47	0.14	0.90	0.48	0.35
Control Delay	107.4	18.4	78.3	55.0	67.0	48.9	0.8	91.5	43.5	8.0
Queue Delay	0.0	0.0	0.0	0.0	0.0	0.0	0.0	0.0	0.0	0.0
Total Delay	107.4	18.4	78.3	55.0	67.0	48.9	0.8	91.5	43.5	8.0
LOS	F	B	E	E	E	D	A	F	D	A
Approach Delay		25.5		56.0		45.3			48.0	
Approach LOS		C		E		D			D	

Intersection Summary	
Cycle Length: 120	
Actuated Cycle Length: 120	
Offset: 44 (37%), Referenced to phase 2:NBT and 6:SBT, Start of Green	
Natural Cycle: 110	
Control Type: Actuated-Coordinated	
Maximum v/c Ratio: 1.00	
Intersection Signal Delay: 43.0	Intersection LOS: D
Intersection Capacity Utilization 83.2%	ICU Level of Service E
Analysis Period (min) 15	

Splits and Phases: 25: 99th Ave & Grand Ave

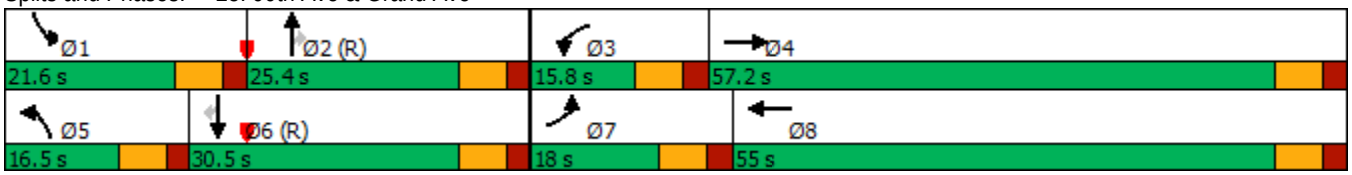

Lane Group	EBT	WBL	WBT
Lane Configurations			
Traffic Volume (vph)	1206	254	2045
Future Volume (vph)	1206	254	2045
Turn Type	NA	Prot	NA
Protected Phases	4	3	8
Permitted Phases			
Detector Phase	4	3	8
Switch Phase			
Minimum Initial (s)	7.0	5.0	7.0
Minimum Split (s)	23.8	10.3	23.8
Total Split (s)	84.0	26.0	110.0
Total Split (%)	76.4%	23.6%	100.0%
Yellow Time (s)	4.3	4.3	4.3
All-Red Time (s)	1.5	1.0	1.5
Lost Time Adjust (s)	0.0	0.0	0.0
Total Lost Time (s)	5.8	5.3	5.8
Lead/Lag	Lag	Lead	
Lead-Lag Optimize?	Yes	Yes	
Recall Mode	None	None	None
Act Effct Green (s)	84.9	14.0	110.0
Actuated g/C Ratio	0.77	0.13	1.00
v/c Ratio	0.54	0.63	0.43
Control Delay	5.3	42.4	2.7
Queue Delay	0.0	0.0	0.0
Total Delay	5.3	42.4	2.7
LOS	A	D	A
Approach Delay	5.3		7.1
Approach LOS	A		A

Intersection Summary	
Cycle Length: 110	
Actuated Cycle Length: 110	
Offset: 107 (97%), Referenced to phase 2: and 6:, Start of Green	
Natural Cycle: 40	
Control Type: Actuated-Coordinated	
Maximum v/c Ratio: 0.63	
Intersection Signal Delay: 6.3	Intersection LOS: A
Intersection Capacity Utilization 87.3%	ICU Level of Service E
Analysis Period (min) 15	

Splits and Phases: 30: SR-101L On Ramp

Lane Group	EBT	WBT	NBL	NBR
Lane Configurations				
Traffic Volume (vph)	1215	1786	468	207
Future Volume (vph)	1215	1786	468	207
Turn Type	NA	NA	Prot	Perm
Protected Phases	4	8	2	
Permitted Phases				2
Detector Phase	4	8	2	2
Switch Phase				
Minimum Initial (s)	7.0	7.0	7.0	7.0
Minimum Split (s)	24.3	23.8	24.6	24.6
Total Split (s)	62.0	62.0	48.0	48.0
Total Split (%)	56.4%	56.4%	43.6%	43.6%
Yellow Time (s)	4.3	4.3	4.3	4.3
All-Red Time (s)	2.0	1.5	2.3	2.3
Lost Time Adjust (s)	0.0	0.0	0.0	0.0
Total Lost Time (s)	6.3	5.8	6.6	6.6
Lead/Lag				
Lead-Lag Optimize?				
Recall Mode	None	None	C-Max	C-Max
Act Effct Green (s)	44.9	45.4	52.2	52.2
Actuated g/C Ratio	0.41	0.41	0.47	0.47
v/c Ratio	0.64	0.62	0.31	0.29
Control Delay	23.1	26.0	19.7	17.8
Queue Delay	0.1	0.0	0.0	0.0
Total Delay	23.3	26.0	19.7	17.8
LOS	C	C	B	B
Approach Delay	23.3	26.0	19.1	
Approach LOS	C	C	B	

Intersection Summary	
Cycle Length: 110	
Actuated Cycle Length: 110	
Offset: 89 (81%), Referenced to phase 2:NBL and 6:, Start of Green	
Natural Cycle: 50	
Control Type: Actuated-Coordinated	
Maximum v/c Ratio: 0.64	
Intersection Signal Delay: 23.8	Intersection LOS: C
Intersection Capacity Utilization 87.3%	ICU Level of Service E
Analysis Period (min) 15	

Splits and Phases: 34: SR-101L Off Ramp

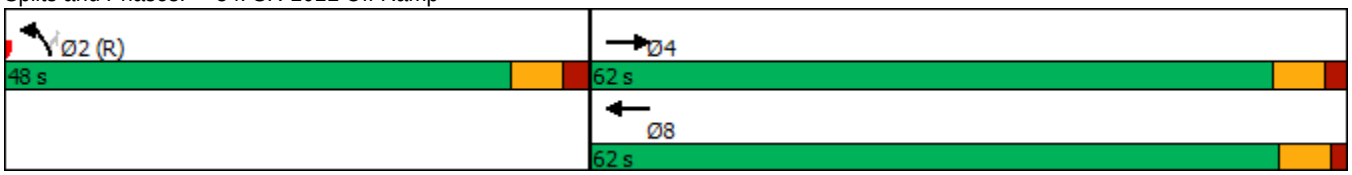

Lane Group	EBL	EBT	WBL	WBT	WBR	NBL	NBT	SBL	SBT	SBR
Lane Configurations										
Traffic Volume (vph)	539	815	46	1063	403	86	312	627	276	325
Future Volume (vph)	539	815	46	1063	403	86	312	627	276	325
Turn Type	Prot	NA	Prot	NA	Perm	Prot	NA	Prot	NA	Perm
Protected Phases	7	4	3	8		5	2	1	6	
Permitted Phases					8					6
Detector Phase	7	4	3	8	8	5	2	1	6	6
Switch Phase										
Minimum Initial (s)	7.0	7.0	7.0	7.0	7.0	5.0	7.0	5.0	7.0	7.0
Minimum Split (s)	13.7	24.7	13.3	24.3	24.3	11.9	24.9	11.7	24.7	24.7
Total Split (s)	23.0	37.8	15.2	30.0	30.0	19.5	26.0	41.0	47.5	47.5
Total Split (%)	19.2%	31.5%	12.7%	25.0%	25.0%	16.3%	21.7%	34.2%	39.6%	39.6%
Yellow Time (s)	4.3	4.3	4.3	4.3	4.3	4.3	4.3	4.3	4.3	4.3
All-Red Time (s)	2.4	2.4	2.0	2.0	2.0	2.6	2.6	2.4	2.4	2.4
Lost Time Adjust (s)	0.0	0.0	0.0	0.0	0.0	0.0	0.0	0.0	0.0	0.0
Total Lost Time (s)	6.7	6.7	6.3	6.3	6.3	6.9	6.9	6.7	6.7	6.7
Lead/Lag	Lead	Lag	Lead	Lag	Lag	Lead	Lag	Lead	Lag	Lag
Lead-Lag Optimize?	Yes	Yes	Yes	Yes	Yes	Yes	Yes	Yes	Yes	Yes
Recall Mode	None	None	None	None	None	None	C-Max	None	C-Max	C-Max
Act Effct Green (s)	16.3	34.5	8.2	23.7	23.7	10.7	19.1	34.3	42.7	42.7
Actuated g/C Ratio	0.14	0.29	0.07	0.20	0.20	0.09	0.16	0.29	0.36	0.36
v/c Ratio	1.25	0.65	0.41	1.14	0.70	0.58	0.67	1.34	0.45	0.45
Control Delay	170.7	40.4	63.8	118.3	13.7	66.7	52.7	187.7	33.6	10.9
Queue Delay	0.0	0.0	0.0	0.0	0.0	0.0	0.0	0.0	0.0	0.0
Total Delay	170.7	40.4	63.8	118.3	13.7	66.7	52.7	187.7	33.6	10.9
LOS	F	D	E	F	B	E	D	F	C	B
Approach Delay		90.1		88.7			55.5		106.3	
Approach LOS		F		F			E		F	

Intersection Summary	
Cycle Length: 120	
Actuated Cycle Length: 120	
Offset: 84 (70%), Referenced to phase 2:NBT and 6:SBT, Start of Green	
Natural Cycle: 150	
Control Type: Actuated-Coordinated	
Maximum v/c Ratio: 1.34	
Intersection Signal Delay: 90.7	Intersection LOS: F
Intersection Capacity Utilization 102.7%	ICU Level of Service G
Analysis Period (min) 15	

Splits and Phases: 37: 91st Ave & Grand Ave

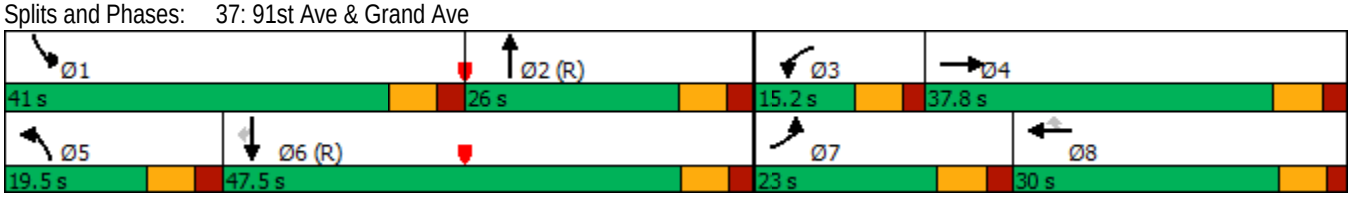

Lane Group	EBL	EBT	WBL	WBT	WBR	NBL	NBT	NBR	SBL	SBT
Lane Configurations										
Traffic Volume (vph)	24	14	661	8	245	15	612	608	366	560
Future Volume (vph)	24	14	661	8	245	15	612	608	366	560
Turn Type	Prot	NA	Prot	NA	Perm	Prot	NA	Perm	Prot	NA
Protected Phases	7	4	3	8		5	2		1	6
Permitted Phases					8			2		
Detector Phase	7	4	3	8	8	5	2	2	1	6
Switch Phase										
Minimum Initial (s)	5.0	7.0	5.0	7.0	7.0	5.0	7.0	7.0	7.0	7.0
Minimum Split (s)	11.3	24.3	11.1	24.1	24.1	11.1	24.1	24.1	12.8	23.8
Total Split (s)	12.2	24.3	32.2	44.3	44.3	11.4	30.5	30.5	33.0	52.1
Total Split (%)	10.2%	20.3%	26.8%	36.9%	36.9%	9.5%	25.4%	25.4%	27.5%	43.4%
Yellow Time (s)	4.3	4.3	4.3	4.3	4.3	4.3	4.3	4.3	4.3	4.3
All-Red Time (s)	2.0	2.0	1.8	1.8	1.8	1.8	1.8	1.8	1.5	1.5
Lost Time Adjust (s)	0.0	0.0	0.0	0.0	0.0	0.0	0.0	0.0	0.0	0.0
Total Lost Time (s)	6.3	6.3	6.1	6.1	6.1	6.1	6.1	6.1	5.8	5.8
Lead/Lag	Lead	Lag	Lead	Lag	Lag	Lead	Lag	Lag	Lead	Lag
Lead-Lag Optimize?	Yes	Yes	Yes	Yes	Yes	Yes	Yes	Yes	Yes	Yes
Recall Mode	None	None	None	None	None	None	C-Max	C-Max	None	C-Max
Act Effct Green (s)	5.8	15.8	31.0	31.0	43.1	5.3	24.4	24.4	27.2	53.1
Actuated g/C Ratio	0.05	0.13	0.26	0.26	0.36	0.04	0.20	0.20	0.23	0.44
v/c Ratio	0.30	0.21	0.84	0.82	0.36	0.20	0.91	0.81	0.98	0.39
Control Delay	64.2	21.6	61.9	60.5	5.0	76.8	30.0	12.6	87.3	24.4
Queue Delay	0.0	0.0	0.0	0.0	0.0	0.0	0.0	0.0	0.0	0.0
Total Delay	64.2	21.6	61.9	60.5	5.0	76.8	30.0	12.6	87.3	24.4
LOS	E	C	E	E	A	E	C	B	F	C
Approach Delay		35.6		46.2			22.0			48.9
Approach LOS		D		D			C			D

Intersection Summary	
Cycle Length: 120	
Actuated Cycle Length: 120	
Offset: 0 (0%), Referenced to phase 2:NBT and 6:SBT, Start of Green	
Natural Cycle: 120	
Control Type: Actuated-Coordinated	
Maximum v/c Ratio: 0.98	
Intersection Signal Delay: 37.3	Intersection LOS: D
Intersection Capacity Utilization 78.9%	ICU Level of Service D
Analysis Period (min) 15	

Splits and Phases: 42: Cactus Rd & 91st Ave

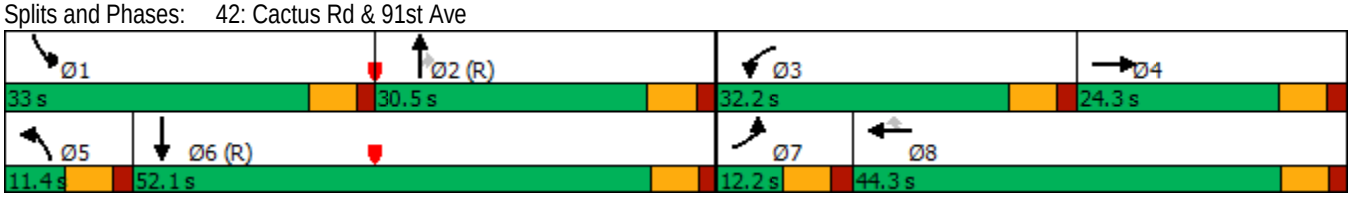

Lane Group	EBT	WBL	WBT	NBL
Lane Configurations				
Traffic Volume (vph)	2460	70	1290	120
Future Volume (vph)	2460	70	1290	120
Turn Type	NA	Prot	NA	Prot
Protected Phases	4	3	8	2
Permitted Phases				
Detector Phase	4	3	8	2
Switch Phase				
Minimum Initial (s)	7.0	7.0	7.0	7.0
Minimum Split (s)	23.8	12.8	23.8	24.6
Total Split (s)	77.0	14.8	91.8	28.2
Total Split (%)	64.2%	12.3%	76.5%	23.5%
Yellow Time (s)	4.3	4.3	4.3	4.3
All-Red Time (s)	1.5	1.5	1.5	2.3
Lost Time Adjust (s)	0.0	0.0	0.0	0.0
Total Lost Time (s)	5.8	5.8	5.8	6.6
Lead/Lag	Lag	Lead		
Lead-Lag Optimize?	Yes	Yes		
Recall Mode	None	None	None	C-Max
Act Effct Green (s)	71.4	8.6	83.2	24.4
Actuated g/C Ratio	0.60	0.07	0.69	0.20
v/c Ratio	0.94	0.61	0.41	0.65
Control Delay	29.7	46.4	23.9	48.5
Queue Delay	0.0	0.0	0.0	0.0
Total Delay	29.7	46.4	23.9	48.5
LOS	C	D	C	D
Approach Delay	29.7		25.1	48.5
Approach LOS	C		C	D

Intersection Summary	
Cycle Length: 120	
Actuated Cycle Length: 120	
Offset: 3 (3%), Referenced to phase 2:NBL and 6:, Start of Green	
Natural Cycle: 90	
Control Type: Actuated-Coordinated	
Maximum v/c Ratio: 0.94	
Intersection Signal Delay: 29.2	Intersection LOS: C
Intersection Capacity Utilization 81.3%	ICU Level of Service D
Analysis Period (min) 15	

Splits and Phases: 7: 113th Ave & Grand Ave

Lane Group	EBL	EBT	WBL	WBT	NBL	NBT	SBT
Lane Configurations							
Traffic Volume (vph)	170	2430	110	1220	100	160	110
Future Volume (vph)	170	2430	110	1220	100	160	110
Turn Type	Prot	NA	Prot	NA	Split	NA	NA
Protected Phases	7	4	3	8	2	2	6
Permitted Phases							
Detector Phase	7	4	3	8	2	2	6
Switch Phase							
Minimum Initial (s)	7.0	7.0	7.0	7.0	7.0	7.0	7.0
Minimum Split (s)	13.7	24.7	13.3	24.3	24.6	24.6	24.3
Total Split (s)	23.3	55.0	14.0	45.7	26.7	26.7	24.3
Total Split (%)	19.4%	45.8%	11.7%	38.1%	22.3%	22.3%	20.3%
Yellow Time (s)	4.3	4.3	4.3	4.3	4.3	4.3	4.3
All-Red Time (s)	2.4	2.4	2.0	2.0	2.3	2.3	2.0
Lost Time Adjust (s)	0.0	0.0	0.0	0.0	0.0	0.0	0.0
Total Lost Time (s)	6.7	6.7	6.3	6.3	6.6	6.6	6.3
Lead/Lag	Lead	Lag	Lead	Lag			
Lead-Lag Optimize?	Yes	Yes	Yes	Yes			
Recall Mode	None	None	None	None	C-Max	C-Max	Max
Act Effct Green (s)	15.5	48.3	7.7	40.5	20.1	20.1	18.0
Actuated g/C Ratio	0.13	0.40	0.06	0.34	0.17	0.17	0.15
v/c Ratio	0.80	1.30	1.09	0.82	0.37	0.53	0.44
Control Delay	74.5	159.1	166.2	16.3	48.5	23.3	41.7
Queue Delay	0.0	0.0	0.0	0.0	0.0	0.0	0.0
Total Delay	74.5	159.1	166.2	16.3	48.5	23.3	41.7
LOS	E	F	F	B	D	C	D
Approach Delay		153.6		28.5		28.9	41.7
Approach LOS		F		C		C	D

Intersection Summary	
Cycle Length: 120	
Actuated Cycle Length: 120	
Offset: 12 (10%), Referenced to phase 2:NBTL, Start of Green	
Natural Cycle: 150	
Control Type: Actuated-Coordinated	
Maximum v/c Ratio: 1.30	
Intersection Signal Delay: 99.9	Intersection LOS: F
Intersection Capacity Utilization 92.5%	ICU Level of Service F
Analysis Period (min) 15	

Splits and Phases: 11: 111th Ave & Grand Ave

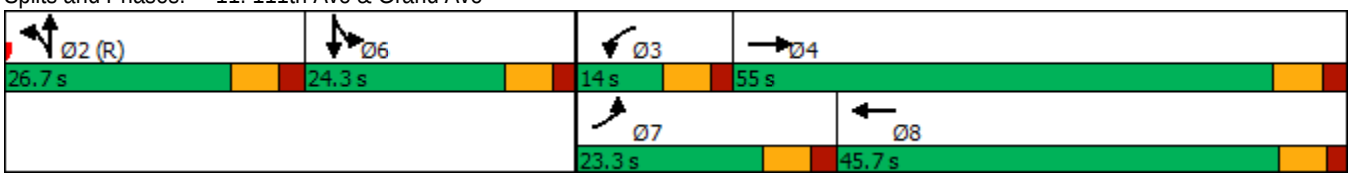

Lane Group	EBL	EBT	WBL	WBT	NBL	NBT	NBR	SBL	SBT
Lane Configurations									
Traffic Volume (vph)	190	2470	70	1290	90	220	90	60	220
Future Volume (vph)	190	2470	70	1290	90	220	90	60	220
Turn Type	Prot	NA	Prot	NA	Prot	NA	Perm	Prot	NA
Protected Phases	7	4	3	8	5	2		1	6
Permitted Phases							2		
Detector Phase	7	4	3	8	5	2	2	1	6
Switch Phase									
Minimum Initial (s)	7.0	7.0	5.0	7.0	5.0	7.0	7.0	5.0	7.0
Minimum Split (s)	14.3	25.3	12.0	25.0	11.7	24.7	24.7	11.5	24.5
Total Split (s)	28.6	67.6	12.0	51.0	14.2	27.4	27.4	13.0	26.2
Total Split (%)	23.8%	56.3%	10.0%	42.5%	11.8%	22.8%	22.8%	10.8%	21.8%
Yellow Time (s)	4.3	4.3	4.3	4.3	4.3	4.3	4.3	4.3	4.3
All-Red Time (s)	3.0	3.0	2.7	2.7	2.4	2.4	2.4	2.2	2.2
Lost Time Adjust (s)	0.0	0.0	0.0	0.0	0.0	0.0	0.0	0.0	0.0
Total Lost Time (s)	7.3	7.3	7.0	7.0	6.7	6.7	6.7	6.5	6.5
Lead/Lag	Lead	Lag	Lead	Lag	Lead	Lag	Lag	Lead	Lag
Lead-Lag Optimize?	Yes	Yes	Yes	Yes	Yes	Yes	Yes	Yes	Yes
Recall Mode	None	None	None	None	None	C-Max	C-Max	None	C-Max
Act Effct Green (s)	18.2	60.3	5.0	47.1	7.5	23.3	23.3	6.5	19.7
Actuated g/C Ratio	0.15	0.50	0.04	0.39	0.06	0.19	0.19	0.05	0.16
v/c Ratio	0.77	1.07	1.06	0.76	0.88	0.34	0.20	0.68	0.55
Control Delay	72.2	42.2	164.3	16.7	114.5	44.6	0.9	88.8	44.6
Queue Delay	0.0	0.0	0.0	0.0	0.0	0.0	0.0	0.0	0.0
Total Delay	72.2	42.2	164.3	16.7	114.5	44.6	0.9	88.8	44.6
LOS	E	D	F	B	F	D	A	F	D
Approach Delay		44.4		23.9		50.5			52.0
Approach LOS		D		C		D			D

Intersection Summary	
Cycle Length: 120	
Actuated Cycle Length: 120	
Offset: 100 (83%), Referenced to phase 2:NBT and 6:SBT, Start of Green	
Natural Cycle: 120	
Control Type: Actuated-Coordinated	
Maximum v/c Ratio: 1.07	
Intersection Signal Delay: 39.4	Intersection LOS: D
Intersection Capacity Utilization 89.1%	ICU Level of Service E
Analysis Period (min) 15	

Splits and Phases: 16: 107th Ave & Grand Ave

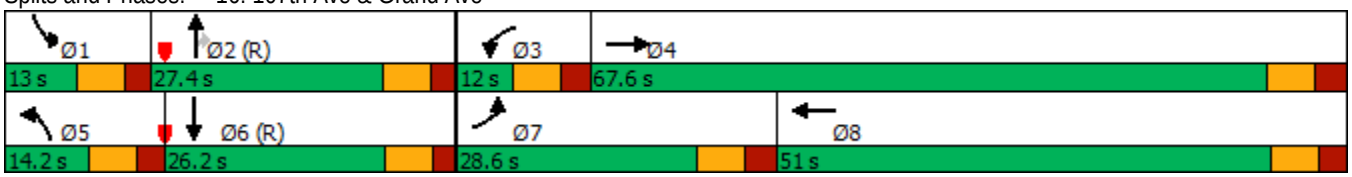

Lane Group	EBL	EBT	WBL	WBT	NBL	NBT	NBR	SBL	SBT
Lane Configurations									
Traffic Volume (vph)	260	2260	40	1310	40	260	40	60	200
Future Volume (vph)	260	2260	40	1310	40	260	40	60	200
Turn Type	Prot	NA	Prot	NA	Prot	NA	Perm	Prot	NA
Protected Phases	7	4	3	8	5	2		1	6
Permitted Phases							2		
Detector Phase	7	4	3	8	5	2	2	1	6
Switch Phase									
Minimum Initial (s)	7.0	7.0	7.0	7.0	5.0	7.0	7.0	5.0	7.0
Minimum Split (s)	13.1	64.1	13.4	24.4	11.5	24.5	24.5	11.5	24.5
Total Split (s)	27.2	66.0	13.4	52.2	12.1	28.6	28.6	12.0	28.5
Total Split (%)	22.7%	55.0%	11.2%	43.5%	10.1%	23.8%	23.8%	10.0%	23.8%
Yellow Time (s)	4.3	4.3	4.3	4.3	4.3	4.3	4.3	4.3	4.3
All-Red Time (s)	1.8	1.8	2.1	2.1	2.2	2.2	2.2	2.2	2.2
Lost Time Adjust (s)	0.0	0.0	0.0	0.0	0.0	0.0	0.0	0.0	0.0
Total Lost Time (s)	6.1	6.1	6.4	6.4	6.5	6.5	6.5	6.5	6.5
Lead/Lag	Lead	Lag	Lead	Lag	Lead	Lag	Lag	Lead	Lag
Lead-Lag Optimize?	Yes	Yes	Yes	Yes	Yes	Yes	Yes	Yes	Yes
Recall Mode	None	None	None	None	None	C-Max	C-Max	None	C-Max
Act Effct Green (s)	20.7	61.7	7.0	45.3	5.6	22.7	22.7	5.8	25.3
Actuated g/C Ratio	0.17	0.51	0.06	0.38	0.05	0.19	0.19	0.05	0.21
v/c Ratio	0.93	0.95	0.43	0.91	0.52	0.80	0.09	0.76	0.44
Control Delay	74.2	5.9	72.0	11.1	78.5	64.9	0.4	103.7	34.7
Queue Delay	0.0	0.0	0.0	0.0	0.0	0.0	0.0	0.0	0.0
Total Delay	74.2	5.9	72.0	11.1	78.5	64.9	0.4	103.7	34.7
LOS	E	A	E	B	E	E	A	F	C
Approach Delay		12.9		12.6		59.0			45.8
Approach LOS		B		B		E			D

Intersection Summary	
Cycle Length: 120	
Actuated Cycle Length: 120	
Offset: 36 (30%), Referenced to phase 2:NBT and 6:SBT, Start of Green	
Natural Cycle: 115	
Control Type: Actuated-Coordinated	
Maximum v/c Ratio: 0.95	
Intersection Signal Delay: 18.5	Intersection LOS: B
Intersection Capacity Utilization 89.3%	ICU Level of Service E
Analysis Period (min) 15	

Splits and Phases: 20: 103rd Ave & Grand Ave

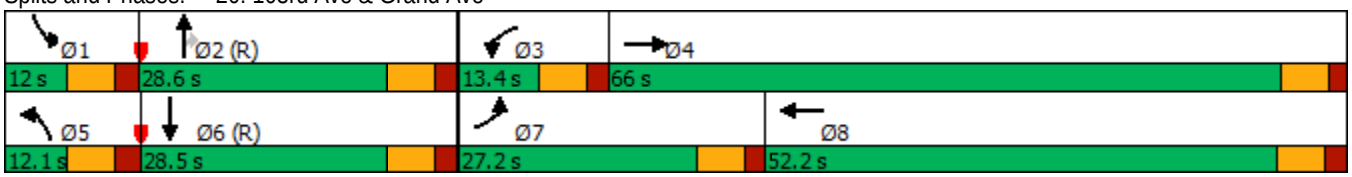

Lane Group	EBL	EBT	WBL	WBT	NBL	NBT	NBR	SBL	SBT	SBR
Lane Configurations										
Traffic Volume (vph)	430	1950	20	1400	70	520	40	280	230	190
Future Volume (vph)	430	1950	20	1400	70	520	40	280	230	190
Turn Type	Prot	NA	Prot	NA	Prot	NA	Perm	Prot	NA	Perm
Protected Phases	7	4	3	8	5	2		1	6	
Permitted Phases							2			6
Detector Phase	7	4	3	8	5	2	2	1	6	6
Switch Phase										
Minimum Initial (s)	7.0	7.0	7.0	7.0	5.0	7.0	7.0	5.0	7.0	7.0
Minimum Split (s)	13.6	24.6	13.6	24.6	11.4	24.4	24.4	11.4	24.4	24.4
Total Split (s)	29.0	59.4	13.6	44.0	15.4	26.0	26.0	21.0	31.6	31.6
Total Split (%)	24.2%	49.5%	11.3%	36.7%	12.8%	21.7%	21.7%	17.5%	26.3%	26.3%
Yellow Time (s)	4.3	4.3	4.3	4.3	4.3	4.3	4.3	4.3	4.3	4.3
All-Red Time (s)	2.3	2.3	2.3	2.3	2.1	2.1	2.1	2.1	2.1	2.1
Lost Time Adjust (s)	0.0	0.0	0.0	0.0	0.0	0.0	0.0	0.0	0.0	0.0
Total Lost Time (s)	6.6	6.6	6.6	6.6	6.4	6.4	6.4	6.4	6.4	6.4
Lead/Lag	Lead	Lag	Lead	Lag	Lead	Lag	Lag	Lead	Lag	Lag
Lead-Lag Optimize?	Yes	Yes	Yes	Yes	Yes	Yes	Yes	Yes	Yes	Yes
Recall Mode	None	None	None	None	None	C-Max	C-Max	None	C-Max	C-Max
Act Effct Green (s)	22.4	58.2	7.0	37.4	8.5	19.6	19.6	14.6	28.3	28.3
Actuated g/C Ratio	0.19	0.48	0.06	0.31	0.07	0.16	0.16	0.12	0.24	0.24
v/c Ratio	1.43	0.89	0.22	1.41	0.62	0.99	0.10	1.45	0.31	0.39
Control Delay	244.7	9.4	59.3	218.6	75.1	84.9	0.5	263.1	40.3	7.5
Queue Delay	0.0	0.0	0.0	0.0	0.0	0.0	0.0	0.0	0.0	0.0
Total Delay	244.7	9.4	59.3	218.6	75.1	84.9	0.5	263.1	40.3	7.5
LOS	F	A	E	F	E	F	A	F	D	A
Approach Delay		51.2		217.0		78.4			120.5	
Approach LOS		D		F		E			F	

Intersection Summary	
Cycle Length: 120	
Actuated Cycle Length: 120	
Offset: 108 (90%), Referenced to phase 2:NBT and 6:SBT, Start of Green	
Natural Cycle: 150	
Control Type: Actuated-Coordinated	
Maximum v/c Ratio: 1.45	
Intersection Signal Delay: 120.3	Intersection LOS: F
Intersection Capacity Utilization 115.4%	ICU Level of Service H
Analysis Period (min) 15	

Splits and Phases: 25: 99th Ave & Grand Ave

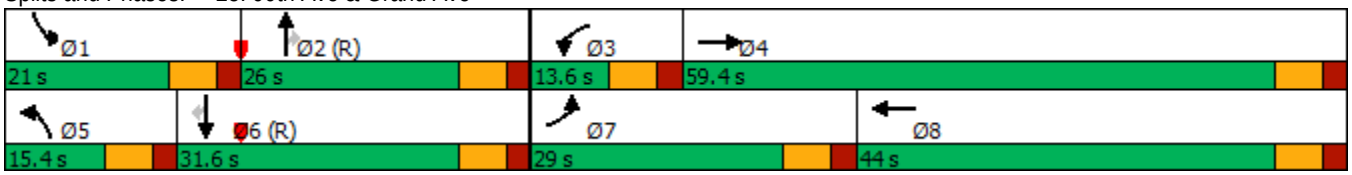

Lane Group	EBT	WBL	WBT
Lane Configurations			
Traffic Volume (vph)	1850	60	2020
Future Volume (vph)	1850	60	2020
Turn Type	NA	Prot	NA
Protected Phases	4	3	8
Permitted Phases			
Detector Phase	4	3	8
Switch Phase			
Minimum Initial (s)	7.0	7.0	7.0
Minimum Split (s)	23.8	12.8	23.8
Total Split (s)	94.0	16.0	110.0
Total Split (%)	85.5%	14.5%	100.0%
Yellow Time (s)	4.3	4.3	4.3
All-Red Time (s)	1.5	1.5	1.5
Lost Time Adjust (s)	0.0	0.0	0.0
Total Lost Time (s)	5.8	5.8	5.8
Lead/Lag	Lag	Lead	
Lead-Lag Optimize?	Yes	Yes	
Recall Mode	None	None	None
Act Effct Green (s)	94.3	7.8	110.0
Actuated g/C Ratio	0.86	0.07	1.00
v/c Ratio	0.58	0.27	0.44
Control Delay	3.4	53.6	1.7
Queue Delay	0.1	0.0	0.0
Total Delay	3.5	53.6	1.7
LOS	A	D	A
Approach Delay	3.5		3.1
Approach LOS	A		A

Intersection Summary	
Cycle Length: 110	
Actuated Cycle Length: 110	
Offset: 5 (5%), Referenced to phase 2: and 6:, Start of Green	
Natural Cycle: 50	
Control Type: Actuated-Coordinated	
Maximum v/c Ratio: 0.58	
Intersection Signal Delay: 3.3	Intersection LOS: A
Intersection Capacity Utilization 95.4%	ICU Level of Service F
Analysis Period (min) 15	

Splits and Phases: 30: SR-101L On Ramp & Grand Ave

Lane Group	EBT	WBT	NBL	NBR
Lane Configurations				
Traffic Volume (vph)	1850	1430	650	100
Future Volume (vph)	1850	1430	650	100
Turn Type	NA	NA	Prot	Perm
Protected Phases	4	8	2	
Permitted Phases				2
Detector Phase	4	8	2	2
Switch Phase				
Minimum Initial (s)	7.0	7.0	7.0	7.0
Minimum Split (s)	24.3	23.8	24.6	24.6
Total Split (s)	66.0	66.0	44.0	44.0
Total Split (%)	60.0%	60.0%	40.0%	40.0%
Yellow Time (s)	4.3	4.3	4.3	4.3
All-Red Time (s)	2.0	1.5	2.3	2.3
Lost Time Adjust (s)	0.0	0.0	0.0	0.0
Total Lost Time (s)	6.3	5.8	6.6	6.6
Lead/Lag				
Lead-Lag Optimize?				
Recall Mode	None	None	C-Max	C-Max
Act Effct Green (s)	56.9	57.4	40.2	40.2
Actuated g/C Ratio	0.52	0.52	0.37	0.37
v/c Ratio	0.76	0.40	0.57	0.19
Control Delay	20.8	16.1	31.0	24.7
Queue Delay	0.4	0.0	0.0	0.0
Total Delay	21.2	16.1	31.0	24.7
LOS	C	B	C	C
Approach Delay	21.2	16.1	30.1	
Approach LOS	C	B	C	

Intersection Summary	
Cycle Length: 110	
Actuated Cycle Length: 110	
Offset: 92 (84%), Referenced to phase 2:NBL and 6:, Start of Green	
Natural Cycle: 60	
Control Type: Actuated-Coordinated	
Maximum v/c Ratio: 0.76	
Intersection Signal Delay: 21.1	Intersection LOS: C
Intersection Capacity Utilization 95.4%	ICU Level of Service F
Analysis Period (min) 15	

Splits and Phases: 34: SR-101L Off Ramp & Grand Ave

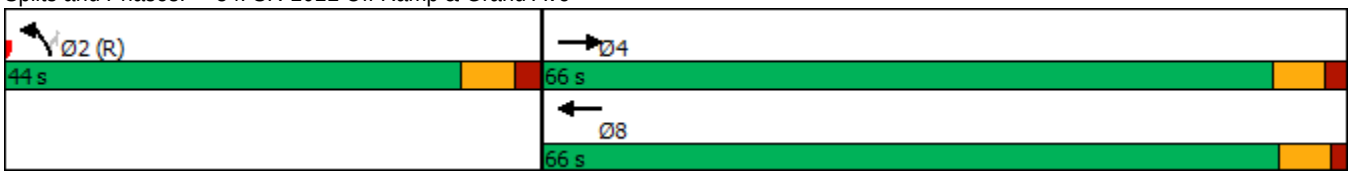

Lane Group	EBL	EBT	WBL	WBT	WBR	NBL	NBT	SBL	SBT	SBR
Lane Configurations										
Traffic Volume (vph)	640	1240	40	650	220	150	410	200	150	630
Future Volume (vph)	640	1240	40	650	220	150	410	200	150	630
Turn Type	Prot	NA	Prot	NA	Perm	Prot	NA	Prot	NA	pm+ov
Protected Phases	7	4	3	8		5	2	1	6	7
Permitted Phases					8					6
Detector Phase	7	4	3	8	8	5	2	1	6	7
Switch Phase										
Minimum Initial (s)	7.0	7.0	7.0	7.0	7.0	5.0	7.0	5.0	7.0	7.0
Minimum Split (s)	13.7	24.7	13.3	24.3	24.3	11.9	24.9	11.7	26.5	13.7
Total Split (s)	37.4	50.1	13.5	26.2	26.2	26.0	30.4	26.0	30.4	37.4
Total Split (%)	31.2%	41.8%	11.3%	21.8%	21.8%	21.7%	25.3%	21.7%	25.3%	31.2%
Yellow Time (s)	4.3	4.3	4.3	4.3	4.3	4.3	4.3	4.3	4.3	4.3
All-Red Time (s)	2.4	2.4	2.0	2.0	2.0	2.6	2.6	2.4	2.4	2.4
Lost Time Adjust (s)	0.0	0.0	0.0	0.0	0.0	0.0	0.0	0.0	0.0	0.0
Total Lost Time (s)	6.7	6.7	6.3	6.3	6.3	6.9	6.9	6.7	6.7	6.7
Lead/Lag	Lead	Lag	Lead	Lag	Lag	Lead	Lag	Lead	Lag	Lead
Lead-Lag Optimize?	Yes	Yes	Yes	Yes	Yes	Yes	Yes	Yes	Yes	Yes
Recall Mode	None	None	None	None	None	None	C-Max	None	C-Max	None
Act Effct Green (s)	28.9	44.6	7.1	20.1	20.1	15.7	26.5	17.9	28.7	64.3
Actuated g/C Ratio	0.24	0.37	0.06	0.17	0.17	0.13	0.22	0.15	0.24	0.54
v/c Ratio	0.84	0.76	0.41	0.84	0.52	0.71	0.68	0.83	0.37	0.76
Control Delay	53.5	36.3	66.8	58.3	9.8	66.8	47.9	58.8	47.6	39.1
Queue Delay	0.0	0.0	0.0	0.0	0.0	0.0	0.0	0.0	0.0	0.0
Total Delay	53.5	36.3	66.8	58.3	9.8	66.8	47.9	58.8	47.6	39.1
LOS	D	D	E	E	A	E	D	E	D	D
Approach Delay		41.9		46.9			52.4		44.4	
Approach LOS		D		D			D		D	

Intersection Summary	
Cycle Length: 120	
Actuated Cycle Length: 120	
Offset: 89 (74%), Referenced to phase 2:NBT and 6:SBT, Start of Green	
Natural Cycle: 90	
Control Type: Actuated-Coordinated	
Maximum v/c Ratio: 0.84	
Intersection Signal Delay: 45.0	Intersection LOS: D
Intersection Capacity Utilization 78.2%	ICU Level of Service D
Analysis Period (min) 15	

Splits and Phases: 37: 91st Ave & Grand Ave

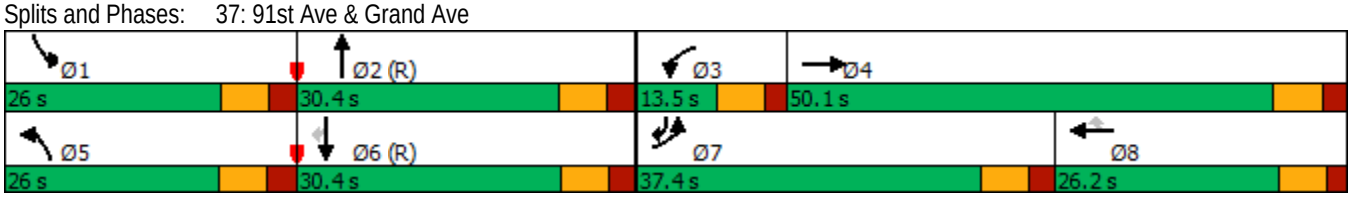

Lane Group	EBL	EBT	WBL	WBT	WBR	NBL	NBT	NBR	SBL	SBT
Lane Configurations										
Traffic Volume (vph)	80	20	150	10	100	110	1060	100	60	680
Future Volume (vph)	80	20	150	10	100	110	1060	100	60	680
Turn Type	Prot	NA	Prot	NA	Perm	Prot	NA	Perm	Prot	NA
Protected Phases	7	4	3	8		5	2		1	6
Permitted Phases					8			2		
Detector Phase	7	4	3	8	8	5	2	2	1	6
Switch Phase										
Minimum Initial (s)	5.0	7.0	5.0	7.0	7.0	5.0	7.0	7.0	7.0	7.0
Minimum Split (s)	11.3	24.3	11.1	24.1	24.1	11.1	24.1	24.1	12.8	23.8
Total Split (s)	19.0	24.3	19.3	24.6	24.6	22.0	60.4	60.4	16.0	54.4
Total Split (%)	15.8%	20.3%	16.1%	20.5%	20.5%	18.3%	50.3%	50.3%	13.3%	45.3%
Yellow Time (s)	4.3	4.3	4.3	4.3	4.3	4.3	4.3	4.3	4.3	4.3
All-Red Time (s)	2.0	2.0	1.8	1.8	1.8	1.8	1.8	1.8	1.5	1.5
Lost Time Adjust (s)	0.0	0.0	0.0	0.0	0.0	0.0	0.0	0.0	0.0	0.0
Total Lost Time (s)	6.3	6.3	6.1	6.1	6.1	6.1	6.1	6.1	5.8	5.8
Lead/Lag	Lead	Lag	Lead	Lag	Lag	Lead	Lag	Lag	Lead	Lag
Lead-Lag Optimize?	Yes	Yes	Yes	Yes	Yes	Yes	Yes	Yes	Yes	Yes
Recall Mode	None	None	None	None	None	None	C-Max	C-Max	None	C-Max
Act Effct Green (s)	10.6	22.9	10.9	9.5	20.6	12.9	58.0	58.0	9.1	51.6
Actuated g/C Ratio	0.09	0.19	0.09	0.08	0.17	0.11	0.48	0.48	0.08	0.43
v/c Ratio	0.56	0.42	0.58	0.67	0.29	0.64	0.68	0.13	0.49	0.56
Control Delay	66.2	13.0	67.2	75.8	5.5	78.7	8.0	0.4	65.7	27.5
Queue Delay	0.0	0.0	0.0	0.0	0.0	0.0	0.0	0.0	0.0	0.0
Total Delay	66.2	13.0	67.2	75.8	5.5	78.7	8.0	0.4	65.7	27.5
LOS	E	B	E	E	A	E	A	A	E	C
Approach Delay		30.0		46.1			13.5			30.3
Approach LOS		C		D			B			C

Intersection Summary	
Cycle Length: 120	
Actuated Cycle Length: 120	
Offset: 0 (0%), Referenced to phase 2:NBT and 6:SBT, Start of Green	
Natural Cycle: 90	
Control Type: Actuated-Coordinated	
Maximum v/c Ratio: 0.68	
Intersection Signal Delay: 23.7	Intersection LOS: C
Intersection Capacity Utilization 71.5%	ICU Level of Service C
Analysis Period (min) 15	

Splits and Phases: 42: Cactus Rd & 91st Ave

Lane Group	EBT	WBL	WBT	NBL
Lane Configurations				
Traffic Volume (vph)	1790	70	2840	240
Future Volume (vph)	1790	70	2840	240
Turn Type	NA	Prot	NA	Prot
Protected Phases	4	3	8	2
Permitted Phases				
Detector Phase	4	3	8	2
Switch Phase				
Minimum Initial (s)	7.0	5.0	7.0	7.0
Minimum Split (s)	23.8	10.3	23.8	24.6
Total Split (s)	63.2	12.8	76.0	34.0
Total Split (%)	57.5%	11.6%	69.1%	30.9%
Yellow Time (s)	4.3	4.3	4.3	4.3
All-Red Time (s)	1.5	1.0	1.5	2.3
Lost Time Adjust (s)	0.0	0.0	0.0	0.0
Total Lost Time (s)	5.8	5.3	5.8	6.6
Lead/Lag	Lag	Lead		
Lead-Lag Optimize?	Yes	Yes		
Recall Mode	None	None	None	C-Max
Act Effct Green (s)	60.0	7.3	70.2	27.4
Actuated g/C Ratio	0.55	0.07	0.64	0.25
v/c Ratio	0.76	0.64	0.94	0.83
Control Delay	22.1	75.0	25.6	53.9
Queue Delay	0.0	0.0	0.0	0.0
Total Delay	22.1	75.0	25.6	53.9
LOS	C	E	C	D
Approach Delay	22.1		26.8	53.9
Approach LOS	C		C	D

Intersection Summary	
Cycle Length: 110	
Actuated Cycle Length: 110	
Offset: 0 (0%), Referenced to phase 2:NBL and 6:, Start of Green	
Natural Cycle: 90	
Control Type: Actuated-Coordinated	
Maximum v/c Ratio: 0.94	
Intersection Signal Delay: 26.8	Intersection LOS: C
Intersection Capacity Utilization 84.6%	ICU Level of Service E
Analysis Period (min) 15	

Splits and Phases: 7: 113th Ave & Grand Ave

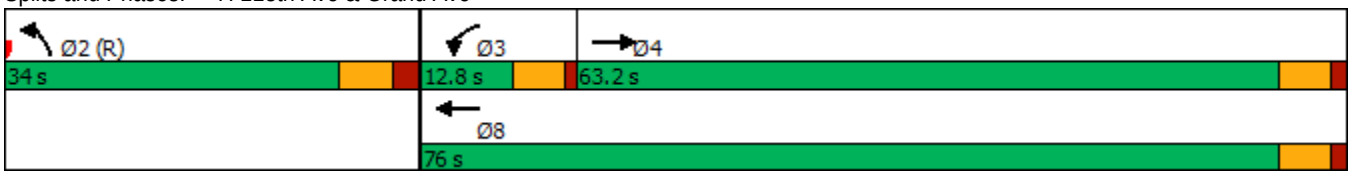

Lane Group	EBL	EBT	WBL	WBT	NBL	NBT	SBT
Lane Configurations							
Traffic Volume (vph)	90	1750	130	2400	210	170	150
Future Volume (vph)	90	1750	130	2400	210	170	150
Turn Type	Prot	NA	Prot	NA	Split	NA	NA
Protected Phases	7	4	3	8	2	2	6
Permitted Phases							
Detector Phase	7	4	3	8	2	2	6
Switch Phase							
Minimum Initial (s)	7.0	7.0	7.0	7.0	7.0	7.0	7.0
Minimum Split (s)	13.7	24.7	13.3	24.3	24.6	24.6	24.3
Total Split (s)	13.7	52.9	16.8	56.0	26.0	26.0	24.3
Total Split (%)	11.4%	44.1%	14.0%	46.7%	21.7%	21.7%	20.3%
Yellow Time (s)	4.3	4.3	4.3	4.3	4.3	4.3	4.3
All-Red Time (s)	2.4	2.4	2.0	2.0	2.3	2.3	2.0
Lost Time Adjust (s)	0.0	0.0	0.0	0.0	0.0	0.0	0.0
Total Lost Time (s)	6.7	6.7	6.3	6.3	6.6	6.6	6.3
Lead/Lag	Lead	Lag	Lead	Lag			
Lead-Lag Optimize?	Yes	Yes	Yes	Yes			
Recall Mode	None	None	None	None	C-Max	C-Max	Max
Act Effct Green (s)	7.0	46.2	10.5	49.7	19.4	19.4	18.0
Actuated g/C Ratio	0.06	0.38	0.09	0.41	0.16	0.16	0.15
v/c Ratio	0.94	1.01	0.90	1.24	0.80	0.56	0.91
Control Delay	130.4	59.8	84.8	124.6	69.4	25.7	57.3
Queue Delay	0.0	0.0	0.0	0.0	0.0	0.0	0.0
Total Delay	130.4	59.8	84.8	124.6	69.4	25.7	57.3
LOS	F	E	F	F	E	C	E
Approach Delay		63.1		122.5		41.8	57.3
Approach LOS		E		F		D	E

Intersection Summary	
Cycle Length: 120	
Actuated Cycle Length: 120	
Offset: 0 (0%), Referenced to phase 2:NBTL, Start of Green	
Natural Cycle: 150	
Control Type: Actuated-Coordinated	
Maximum v/c Ratio: 1.24	
Intersection Signal Delay: 87.7	Intersection LOS: F
Intersection Capacity Utilization 101.7%	ICU Level of Service G
Analysis Period (min) 15	

Splits and Phases: 11: 111th Ave & Grand Ave

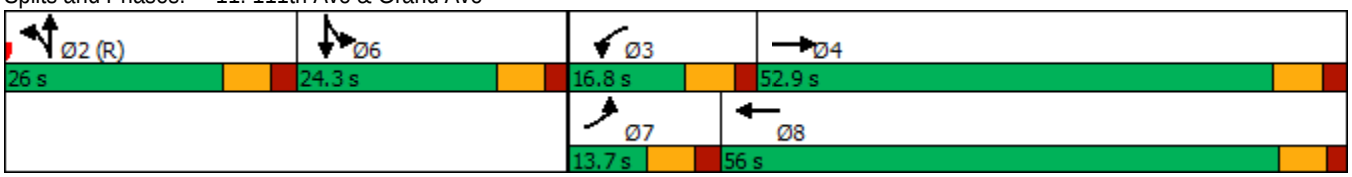

Lane Group	EBL	EBT	WBL	WBT	NBL	NBT	NBR	SBL	SBT
Lane Configurations									
Traffic Volume (vph)	80	1840	90	2200	210	230	70	100	290
Future Volume (vph)	80	1840	90	2200	210	230	70	100	290
Turn Type	Prot	NA	Prot	NA	Prot	NA	Perm	Prot	NA
Protected Phases	7	4	3	8	5	2		1	6
Permitted Phases							2		
Detector Phase	7	4	3	8	5	2	2	1	6
Switch Phase									
Minimum Initial (s)	7.0	7.0	7.0	7.0	5.0	7.0	7.0	5.0	7.0
Minimum Split (s)	14.3	25.3	14.0	25.0	11.7	24.7	24.7	11.5	24.5
Total Split (s)	14.6	58.6	14.0	58.0	22.2	26.3	26.3	21.1	25.2
Total Split (%)	12.2%	48.8%	11.7%	48.3%	18.5%	21.9%	21.9%	17.6%	21.0%
Yellow Time (s)	4.3	4.3	4.3	4.3	4.3	4.3	4.3	4.3	4.3
All-Red Time (s)	3.0	3.0	2.7	2.7	2.4	2.4	2.4	2.2	2.2
Lost Time Adjust (s)	0.0	0.0	0.0	0.0	0.0	0.0	0.0	0.0	0.0
Total Lost Time (s)	7.3	7.3	7.0	7.0	6.7	6.7	6.7	6.5	6.5
Lead/Lag	Lead	Lag	Lead	Lag	Lead	Lag	Lag	Lead	Lag
Lead-Lag Optimize?	Yes	Yes	Yes	Yes	Yes	Yes	Yes	Yes	Yes
Recall Mode	None	None	None	None	None	C-Max	C-Max	None	C-Max
Act Effct Green (s)	7.3	51.3	7.0	51.0	15.5	22.2	22.2	12.0	18.7
Actuated g/C Ratio	0.06	0.43	0.06	0.42	0.13	0.18	0.18	0.10	0.16
v/c Ratio	0.81	0.95	0.94	1.12	0.99	0.38	0.18	0.61	0.89
Control Delay	101.1	17.1	90.8	68.8	109.7	45.5	0.9	65.5	56.3
Queue Delay	0.0	0.0	0.0	0.0	0.0	0.0	0.0	0.0	0.0
Total Delay	101.1	17.1	90.8	68.8	109.7	45.5	0.9	65.5	56.3
LOS	F	B	F	E	F	D	A	E	E
Approach Delay		20.5		69.6		65.8			57.7
Approach LOS		C		E		E			E

Intersection Summary	
Cycle Length: 120	
Actuated Cycle Length: 120	
Offset: 96 (80%), Referenced to phase 2:NBT and 6:SBT, Start of Green	
Natural Cycle: 150	
Control Type: Actuated-Coordinated	
Maximum v/c Ratio: 1.12	
Intersection Signal Delay: 50.1	Intersection LOS: D
Intersection Capacity Utilization 99.4%	ICU Level of Service F
Analysis Period (min) 15	

Splits and Phases: 16: 107th Ave & Grand Ave

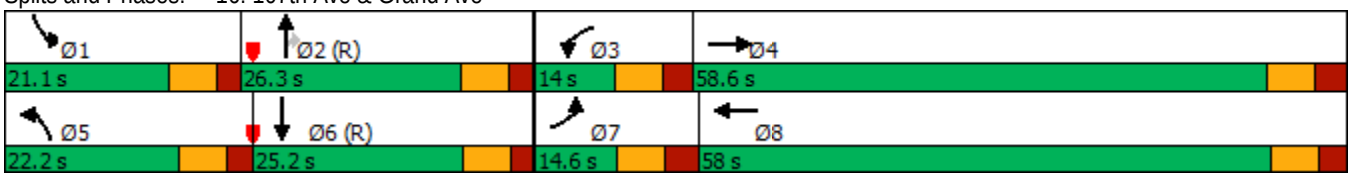

Lane Group	EBL	EBT	WBL	WBT	NBL	NBT	NBR	SBL	SBT
Lane Configurations									
Traffic Volume (vph)	120	1750	30	2090	70	200	60	200	250
Future Volume (vph)	120	1750	30	2090	70	200	60	200	250
Turn Type	Prot	NA	Prot	NA	Prot	NA	Perm	Prot	NA
Protected Phases	7	4	3	8	5	2		1	6
Permitted Phases							2		
Detector Phase	7	4	3	8	5	2	2	1	6
Switch Phase									
Minimum Initial (s)	5.0	7.0	5.0	7.0	5.0	7.0	7.0	5.0	7.0
Minimum Split (s)	11.1	24.1	11.4	24.4	11.5	24.5	24.5	11.5	24.5
Total Split (s)	15.4	60.9	11.5	57.0	15.0	26.3	26.3	21.3	32.6
Total Split (%)	12.8%	50.8%	9.6%	47.5%	12.5%	21.9%	21.9%	17.8%	27.2%
Yellow Time (s)	4.3	4.3	4.3	4.3	4.3	4.3	4.3	4.3	4.3
All-Red Time (s)	1.8	1.8	2.1	2.1	2.2	2.2	2.2	2.2	2.2
Lost Time Adjust (s)	0.0	0.0	0.0	0.0	0.0	0.0	0.0	0.0	0.0
Total Lost Time (s)	6.1	6.1	6.4	6.4	6.5	6.5	6.5	6.5	6.5
Lead/Lag	Lead	Lag	Lead	Lag	Lead	Lag	Lag	Lead	Lag
Lead-Lag Optimize?	Yes	Yes	Yes	Yes	Yes	Yes	Yes	Yes	Yes
Recall Mode	None	None	None	None	None	C-Max	C-Max	None	C-Max
Act Effct Green (s)	9.3	59.4	5.1	50.6	8.1	19.8	19.8	14.8	29.1
Actuated g/C Ratio	0.08	0.50	0.04	0.42	0.07	0.16	0.16	0.12	0.24
v/c Ratio	0.95	0.77	0.44	1.09	0.64	0.71	0.17	0.99	0.57
Control Delay	111.2	8.3	77.0	53.4	78.1	60.9	0.9	110.2	33.7
Queue Delay	0.0	0.0	0.0	0.0	0.0	0.0	0.0	0.0	0.0
Total Delay	111.2	8.3	77.0	53.4	78.1	60.9	0.9	110.2	33.7
LOS	F	A	E	D	E	E	A	F	C
Approach Delay		14.8		53.7		53.7			56.5
Approach LOS		B		D		D			E

Intersection Summary	
Cycle Length: 120	
Actuated Cycle Length: 120	
Offset: 48 (40%), Referenced to phase 2:NBT and 6:SBT, Start of Green	
Natural Cycle: 130	
Control Type: Actuated-Coordinated	
Maximum v/c Ratio: 1.09	
Intersection Signal Delay: 39.6	Intersection LOS: D
Intersection Capacity Utilization 91.7%	ICU Level of Service F
Analysis Period (min) 15	

Splits and Phases: 20: 103rd Ave & Grand Ave

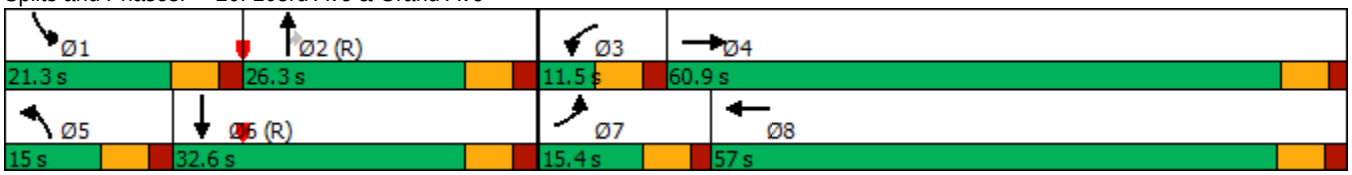

Lane Group	EBL	EBT	WBL	WBT	NBL	NBT	NBR	SBL	SBT	SBR
Lane Configurations										
Traffic Volume (vph)	210	1770	80	1960	50	320	50	340	470	250
Future Volume (vph)	210	1770	80	1960	50	320	50	340	470	250
Turn Type	Prot	NA	Prot	NA	Prot	NA	Perm	Prot	NA	Perm
Protected Phases	7	4	3	8	5	2		1	6	
Permitted Phases							2			6
Detector Phase	7	4	3	8	5	2	2	1	6	6
Switch Phase										
Minimum Initial (s)	5.0	7.0	5.0	7.0	5.0	7.0	7.0	5.0	7.0	7.0
Minimum Split (s)	11.6	24.6	11.6	24.6	11.4	24.4	24.4	11.4	24.4	24.4
Total Split (s)	18.0	54.2	13.8	50.0	15.5	27.0	27.0	25.0	36.5	36.5
Total Split (%)	15.0%	45.2%	11.5%	41.7%	12.9%	22.5%	22.5%	20.8%	30.4%	30.4%
Yellow Time (s)	4.3	4.3	4.3	4.3	4.3	4.3	4.3	4.3	4.3	4.3
All-Red Time (s)	2.3	2.3	2.3	2.3	2.1	2.1	2.1	2.1	2.1	2.1
Lost Time Adjust (s)	0.0	0.0	0.0	0.0	0.0	0.0	0.0	0.0	0.0	0.0
Total Lost Time (s)	6.6	6.6	6.6	6.6	6.4	6.4	6.4	6.4	6.4	6.4
Lead/Lag	Lead	Lag	Lead	Lag	Lead	Lag	Lag	Lead	Lag	Lag
Lead-Lag Optimize?	Yes	Yes	Yes	Yes	Yes	Yes	Yes	Yes	Yes	Yes
Recall Mode	None	None	None	None	None	C-Max	C-Max	None	C-Max	C-Max
Act Effct Green (s)	11.4	47.6	7.2	43.4	8.1	20.6	20.6	18.6	33.5	33.5
Actuated g/C Ratio	0.10	0.40	0.06	0.36	0.07	0.17	0.17	0.16	0.28	0.28
v/c Ratio	1.36	0.98	0.81	1.37	0.45	0.57	0.12	1.34	0.51	0.46
Control Delay	230.5	36.7	103.3	201.0	65.5	49.7	0.6	215.2	39.6	13.9
Queue Delay	0.0	0.0	0.0	0.0	0.0	0.0	0.0	0.0	0.0	0.0
Total Delay	230.5	36.7	103.3	201.0	65.5	49.7	0.6	215.2	39.6	13.9
LOS	F	D	F	F	E	D	A	F	D	B
Approach Delay		56.7		197.7		45.8			89.9	
Approach LOS		E		F		D			F	

Intersection Summary	
Cycle Length: 120	
Actuated Cycle Length: 120	
Offset: 0 (0%), Referenced to phase 2:NBT and 6:SBT, Start of Green	
Natural Cycle: 150	
Control Type: Actuated-Coordinated	
Maximum v/c Ratio: 1.37	
Intersection Signal Delay: 119.0	Intersection LOS: F
Intersection Capacity Utilization 106.7%	ICU Level of Service G
Analysis Period (min) 15	

Splits and Phases: 25: 99th Ave & Grand Ave

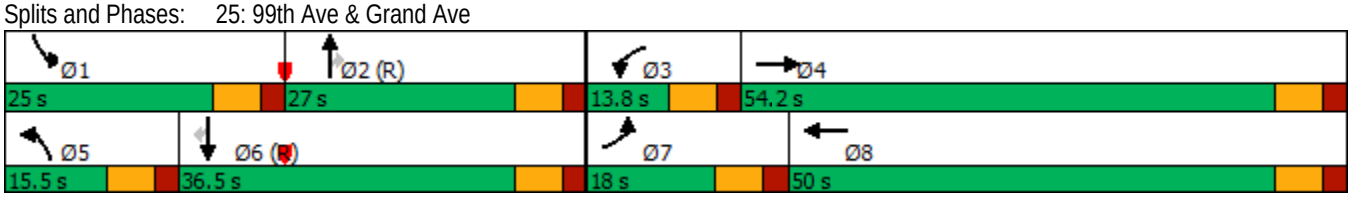

Lane Group	EBT	WBL	WBT
Lane Configurations			
Traffic Volume (vph)	1530	180	2390
Future Volume (vph)	1530	180	2390
Turn Type	NA	Prot	NA
Protected Phases	4	3	8
Permitted Phases			
Detector Phase	4	3	8
Switch Phase			
Minimum Initial (s)	7.0	5.0	7.0
Minimum Split (s)	23.8	10.3	23.8
Total Split (s)	89.0	21.0	110.0
Total Split (%)	80.9%	19.1%	100.0%
Yellow Time (s)	4.3	4.3	4.3
All-Red Time (s)	1.5	1.0	1.5
Lost Time Adjust (s)	0.0	0.0	0.0
Total Lost Time (s)	5.8	5.3	5.8
Lead/Lag	Lag	Lead	
Lead-Lag Optimize?	Yes	Yes	
Recall Mode	None	None	None
Act Effct Green (s)	87.4	11.5	110.0
Actuated g/C Ratio	0.79	0.10	1.00
v/c Ratio	0.60	0.54	0.51
Control Delay	5.0	47.6	3.4
Queue Delay	0.0	0.0	0.0
Total Delay	5.0	47.6	3.4
LOS	A	D	A
Approach Delay	5.0		6.5
Approach LOS	A		A

Intersection Summary	
Cycle Length: 110	
Actuated Cycle Length: 110	
Offset: 100 (91%), Referenced to phase 2: and 6:, Start of Green	
Natural Cycle: 45	
Control Type: Actuated-Coordinated	
Maximum v/c Ratio: 0.60	
Intersection Signal Delay: 5.8	Intersection LOS: A
Intersection Capacity Utilization 58.0%	ICU Level of Service B
Analysis Period (min) 15	

Splits and Phases: 30: SR-101L On Ramp

Lane Group	EBT	WBT	NBL	NBR
Lane Configurations				
Traffic Volume (vph)	1530	2120	450	140
Future Volume (vph)	1530	2120	450	140
Turn Type	NA	NA	Prot	Perm
Protected Phases	4	8	2	
Permitted Phases				2
Detector Phase	4	8	2	2
Switch Phase				
Minimum Initial (s)	7.0	7.0	7.0	7.0
Minimum Split (s)	24.3	23.8	24.6	24.6
Total Split (s)	69.0	69.0	41.0	41.0
Total Split (%)	62.7%	62.7%	37.3%	37.3%
Yellow Time (s)	4.3	4.3	4.3	4.3
All-Red Time (s)	2.0	1.5	2.3	2.3
Lost Time Adjust (s)	0.0	0.0	0.0	0.0
Total Lost Time (s)	6.3	5.8	6.6	6.6
Lead/Lag				
Lead-Lag Optimize?				
Recall Mode	None	None	C-Max	C-Max
Act Effct Green (s)	55.4	55.9	41.7	41.7
Actuated g/C Ratio	0.50	0.51	0.38	0.38
v/c Ratio	0.65	0.60	0.38	0.25
Control Delay	17.7	19.5	27.1	23.3
Queue Delay	0.2	0.0	0.0	0.0
Total Delay	17.9	19.5	27.1	23.3
LOS	B	B	C	C
Approach Delay	17.9	19.5	26.2	
Approach LOS	B	B	C	

Intersection Summary	
Cycle Length: 110	
Actuated Cycle Length: 110	
Offset: 84 (76%), Referenced to phase 2:NBL and 6:, Start of Green	
Natural Cycle: 55	
Control Type: Actuated-Coordinated	
Maximum v/c Ratio: 0.65	
Intersection Signal Delay: 19.8	Intersection LOS: B
Intersection Capacity Utilization 58.0%	ICU Level of Service B
Analysis Period (min) 15	

Splits and Phases: 34: SR-101L Off Ramp

Lane Group	EBL	EBT	WBL	WBT	WBR	NBL	NBT	SBL	SBT	SBR
Lane Configurations										
Traffic Volume (vph)	650	930	50	1490	370	130	360	630	330	460
Future Volume (vph)	650	930	50	1490	370	130	360	630	330	460
Turn Type	Prot	NA	Prot	NA	Perm	Prot	NA	Prot	NA	pm+ov
Protected Phases	7	4	3	8		5	2	1	6	7
Permitted Phases					8					6
Detector Phase	7	4	3	8	8	5	2	1	6	7
Switch Phase										
Minimum Initial (s)	7.0	7.0	7.0	7.0	7.0	5.0	7.0	5.0	7.0	7.0
Minimum Split (s)	13.7	24.7	13.3	24.3	24.3	11.9	24.9	11.7	24.7	13.7
Total Split (s)	23.0	42.6	15.4	35.0	35.0	19.9	27.0	35.0	42.1	23.0
Total Split (%)	19.2%	35.5%	12.8%	29.2%	29.2%	16.6%	22.5%	29.2%	35.1%	19.2%
Yellow Time (s)	4.3	4.3	4.3	4.3	4.3	4.3	4.3	4.3	4.3	4.3
All-Red Time (s)	2.4	2.4	2.0	2.0	2.0	2.6	2.6	2.4	2.4	2.4
Lost Time Adjust (s)	0.0	0.0	0.0	0.0	0.0	0.0	0.0	0.0	0.0	0.0
Total Lost Time (s)	6.7	6.7	6.3	6.3	6.3	6.9	6.9	6.7	6.7	6.7
Lead/Lag	Lead	Lag	Lead	Lag	Lag	Lead	Lag	Lead	Lag	Lead
Lead-Lag Optimize?	Yes	Yes	Yes	Yes	Yes	Yes	Yes	Yes	Yes	Yes
Recall Mode	None	None	None	None	None	None	C-Max	None	C-Max	None
Act Effct Green (s)	16.3	39.3	8.4	28.7	28.7	12.3	20.1	28.3	36.1	59.1
Actuated g/C Ratio	0.14	0.33	0.07	0.24	0.24	0.10	0.17	0.24	0.30	0.49
v/c Ratio	1.50	0.66	0.44	1.32	0.68	0.76	0.72	1.63	0.64	0.60
Control Delay	274.1	37.4	64.5	186.7	19.1	78.1	54.1	315.1	46.6	32.0
Queue Delay	0.0	0.0	0.0	0.0	0.0	0.0	0.0	0.0	0.0	0.0
Total Delay	274.1	37.4	64.5	186.7	19.1	78.1	54.1	315.1	46.6	32.0
LOS	F	D	E	F	B	E	D	F	D	C
Approach Delay		129.6		151.1			59.9		161.0	
Approach LOS		F		F			E		F	

Intersection Summary	
Cycle Length: 120	
Actuated Cycle Length: 120	
Offset: 90 (75%), Referenced to phase 2:NBT and 6:SBT, Start of Green	
Natural Cycle: 150	
Control Type: Actuated-Coordinated	
Maximum v/c Ratio: 1.63	
Intersection Signal Delay: 138.4	Intersection LOS: F
Intersection Capacity Utilization 115.6%	ICU Level of Service H
Analysis Period (min) 15	

Splits and Phases: 37: 91st Ave & Grand Ave

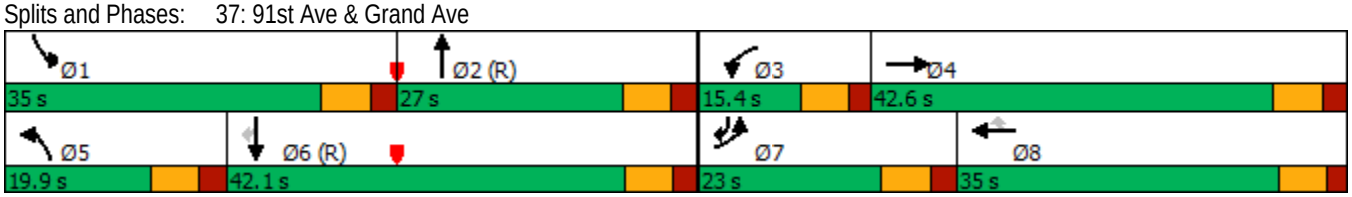

Lane Group	EBL	EBT	WBL	WBT	WBR	NBL	NBT	NBR	SBL	SBT
Lane Configurations										
Traffic Volume (vph)	50	20	550	10	170	40	810	520	260	790
Future Volume (vph)	50	20	550	10	170	40	810	520	260	790
Turn Type	Prot	NA	Prot	NA	Perm	Prot	NA	Perm	Prot	NA
Protected Phases	7	4	3	8		5	2		1	6
Permitted Phases					8			2		
Detector Phase	7	4	3	8	8	5	2	2	1	6
Switch Phase										
Minimum Initial (s)	5.0	7.0	5.0	7.0	7.0	5.0	7.0	7.0	7.0	7.0
Minimum Split (s)	11.3	24.3	11.1	24.1	24.1	11.1	24.1	24.1	12.8	23.8
Total Split (s)	15.3	24.3	30.0	39.0	39.0	13.1	38.7	38.7	27.0	52.6
Total Split (%)	12.8%	20.3%	25.0%	32.5%	32.5%	10.9%	32.3%	32.3%	22.5%	43.8%
Yellow Time (s)	4.3	4.3	4.3	4.3	4.3	4.3	4.3	4.3	4.3	4.3
All-Red Time (s)	2.0	2.0	1.8	1.8	1.8	1.8	1.8	1.8	1.5	1.5
Lost Time Adjust (s)	0.0	0.0	0.0	0.0	0.0	0.0	0.0	0.0	0.0	0.0
Total Lost Time (s)	6.3	6.3	6.1	6.1	6.1	6.1	6.1	6.1	5.8	5.8
Lead/Lag	Lead	Lag	Lead	Lag	Lag	Lead	Lag	Lag	Lead	Lag
Lead-Lag Optimize?	Yes	Yes	Yes	Yes	Yes	Yes	Yes	Yes	Yes	Yes
Recall Mode	None	None	None	None	None	None	C-Max	C-Max	None	C-Max
Act Effct Green (s)	8.0	18.6	23.3	23.3	36.2	6.7	33.1	33.1	20.7	49.4
Actuated g/C Ratio	0.07	0.16	0.19	0.19	0.30	0.06	0.28	0.28	0.17	0.41
v/c Ratio	0.45	0.35	0.93	0.92	0.30	0.43	0.88	0.75	0.92	0.61
Control Delay	65.4	16.0	82.1	80.9	5.5	75.6	18.8	7.5	83.9	30.5
Queue Delay	0.0	0.0	0.0	0.0	0.0	0.0	0.0	0.0	0.0	0.0
Total Delay	65.4	16.0	82.1	80.9	5.5	75.6	18.8	7.5	83.9	30.5
LOS	E	B	F	F	A	E	B	A	F	C
Approach Delay		31.3		63.8			16.2			43.4
Approach LOS		C		E			B			D

Intersection Summary	
Cycle Length: 120	
Actuated Cycle Length: 120	
Offset: 0 (0%), Referenced to phase 2:NBT and 6:SBT, Start of Green	
Natural Cycle: 100	
Control Type: Actuated-Coordinated	
Maximum v/c Ratio: 0.93	
Intersection Signal Delay: 36.1	Intersection LOS: D
Intersection Capacity Utilization 74.0%	ICU Level of Service D
Analysis Period (min) 15	

Splits and Phases: 42: Cactus Rd & 91st Ave

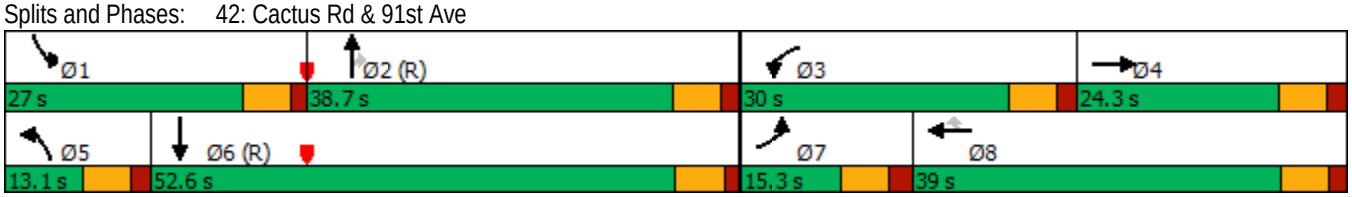

Lane Group	EBT	WBL	WBT	NBL
Lane Configurations				
Traffic Volume (vph)	2460	70	1290	120
Future Volume (vph)	2460	70	1290	120
Turn Type	NA	Prot	NA	Prot
Protected Phases	4	3	8	2
Permitted Phases				
Detector Phase	4	3	8	2
Switch Phase				
Minimum Initial (s)	7.0	7.0	7.0	7.0
Minimum Split (s)	23.8	12.8	23.8	24.6
Total Split (s)	77.0	14.8	91.8	28.2
Total Split (%)	64.2%	12.3%	76.5%	23.5%
Yellow Time (s)	4.3	4.3	4.3	4.3
All-Red Time (s)	1.5	1.5	1.5	2.3
Lost Time Adjust (s)	0.0	0.0	0.0	0.0
Total Lost Time (s)	5.8	5.8	5.8	6.6
Lead/Lag	Lag	Lead		
Lead-Lag Optimize?	Yes	Yes		
Recall Mode	None	None	None	C-Max
Act Effct Green (s)	71.4	8.6	83.2	24.4
Actuated g/C Ratio	0.60	0.07	0.69	0.20
v/c Ratio	0.94	0.61	0.41	0.65
Control Delay	29.7	75.0	8.1	48.5
Queue Delay	0.0	0.0	0.0	0.0
Total Delay	29.7	75.0	8.1	48.5
LOS	C	E	A	D
Approach Delay	29.7		11.5	48.5
Approach LOS	C		B	D

Intersection Summary	
Cycle Length: 120	
Actuated Cycle Length: 120	
Offset: 3 (3%), Referenced to phase 2:NBL and 6:, Start of Green	
Natural Cycle: 90	
Control Type: Actuated-Coordinated	
Maximum v/c Ratio: 0.94	
Intersection Signal Delay: 24.7	Intersection LOS: C
Intersection Capacity Utilization 81.3%	ICU Level of Service D
Analysis Period (min) 15	

Splits and Phases: 7: 113th Ave & Grand Ave

Lane Group	EBL	EBT	WBL	WBT	NBL	NBT	NBR	SBL	SBT	SBR
Lane Configurations										
Traffic Volume (vph)	170	2430	110	1220	100	160	190	50	110	60
Future Volume (vph)	170	2430	110	1220	100	160	190	50	110	60
Turn Type	Prot	NA	Prot	NA	Prot	NA	Perm	Prot	NA	pm+ov
Protected Phases	7	4	3	8	5	2		1	6	7
Permitted Phases							2			6
Detector Phase	7	4	3	8	5	2	2	1	6	7
Switch Phase										
Minimum Initial (s)	7.0	7.0	7.0	7.0	7.0	7.0	7.0	7.0	7.0	7.0
Minimum Split (s)	13.7	24.7	13.3	24.3	24.6	24.6	24.6	24.3	24.3	13.7
Total Split (s)	20.6	86.0	13.6	79.0	24.8	26.0	26.0	24.4	25.6	20.6
Total Split (%)	13.7%	57.3%	9.1%	52.7%	16.5%	17.3%	17.3%	16.3%	17.1%	13.7%
Yellow Time (s)	4.3	4.3	4.3	4.3	4.3	4.3	4.3	4.3	4.3	4.3
All-Red Time (s)	2.4	2.4	2.0	2.0	2.3	2.3	2.3	2.0	2.0	2.4
Lost Time Adjust (s)	0.0	0.0	0.0	0.0	0.0	0.0	0.0	0.0	0.0	0.0
Total Lost Time (s)	6.7	6.7	6.3	6.3	6.6	6.6	6.6	6.3	6.3	6.7
Lead/Lag	Lead	Lag	Lead	Lag	Lead	Lag	Lag	Lead	Lag	Lead
Lead-Lag Optimize?	Yes	Yes	Yes	Yes	Yes	Yes	Yes	Yes	Yes	Yes
Recall Mode	None	None	None	None	Max	C-Max	C-Max	Max	Max	None
Act Effct Green (s)	12.5	79.3	7.3	74.1	18.2	19.4	19.4	18.1	19.3	38.1
Actuated g/C Ratio	0.08	0.53	0.05	0.49	0.12	0.13	0.13	0.12	0.13	0.25
v/c Ratio	0.64	0.99	0.74	0.56	0.26	0.38	0.55	0.25	0.50	0.14
Control Delay	76.9	50.0	96.1	27.8	61.7	62.5	15.3	63.2	68.6	7.8
Queue Delay	0.0	1.5	0.0	0.0	0.0	0.0	0.0	0.0	0.0	0.0
Total Delay	76.9	51.5	96.1	27.8	61.7	62.5	15.3	63.2	68.6	7.8
LOS	E	D	F	C	E	E	B	E	E	A
Approach Delay		53.1		33.3		42.4			50.8	
Approach LOS		D		C		D			D	

Intersection Summary	
Cycle Length: 150	
Actuated Cycle Length: 150	
Offset: 0 (0%), Referenced to phase 2:NBT, Start of Green	
Natural Cycle: 140	
Control Type: Actuated-Coordinated	
Maximum v/c Ratio: 0.99	
Intersection Signal Delay: 46.2	Intersection LOS: D
Intersection Capacity Utilization 86.9%	ICU Level of Service E
Analysis Period (min) 15	

Splits and Phases: 11: 111th Ave & Grand Ave

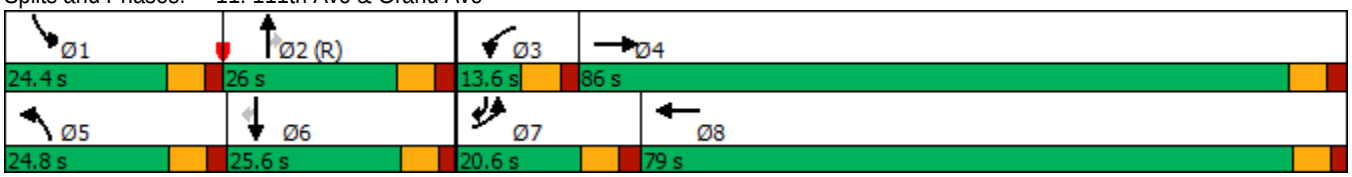

Lane Group	EBL	EBT	WBL	WBT	NBL	NBT	NBR	SBL	SBT
Lane Configurations									
Traffic Volume (vph)	190	2470	70	1290	90	220	90	60	220
Future Volume (vph)	190	2470	70	1290	90	220	90	60	220
Turn Type	Prot	NA	Prot	NA	Prot	NA	Perm	Prot	NA
Protected Phases	7	4	3	8	5	2		1	6
Permitted Phases							2		
Detector Phase	7	4	3	8	5	2	2	1	6
Switch Phase									
Minimum Initial (s)	7.0	7.0	5.0	7.0	5.0	7.0	7.0	5.0	7.0
Minimum Split (s)	14.3	25.3	12.0	25.0	11.7	24.7	24.7	11.5	24.5
Total Split (s)	28.6	67.6	12.0	51.0	14.2	27.4	27.4	13.0	26.2
Total Split (%)	23.8%	56.3%	10.0%	42.5%	11.8%	22.8%	22.8%	10.8%	21.8%
Yellow Time (s)	4.3	4.3	4.3	4.3	4.3	4.3	4.3	4.3	4.3
All-Red Time (s)	3.0	3.0	2.7	2.7	2.4	2.4	2.4	2.2	2.2
Lost Time Adjust (s)	0.0	0.0	0.0	0.0	0.0	0.0	0.0	0.0	0.0
Total Lost Time (s)	7.3	7.3	7.0	7.0	6.7	6.7	6.7	6.5	6.5
Lead/Lag	Lead	Lag	Lead	Lag	Lead	Lag	Lag	Lead	Lag
Lead-Lag Optimize?	Yes	Yes	Yes	Yes	Yes	Yes	Yes	Yes	Yes
Recall Mode	None	None	None	None	None	C-Max	C-Max	None	C-Max
Act Effct Green (s)	18.2	60.3	5.0	47.1	7.5	23.3	23.3	6.5	19.7
Actuated g/C Ratio	0.15	0.50	0.04	0.39	0.06	0.19	0.19	0.05	0.16
v/c Ratio	0.77	1.07	1.06	0.76	0.88	0.34	0.20	0.68	0.55
Control Delay	68.0	68.1	164.3	16.9	114.5	44.6	0.9	88.8	44.6
Queue Delay	0.0	0.0	0.0	0.0	0.0	0.0	0.0	0.0	0.0
Total Delay	68.0	68.1	164.3	16.9	114.5	44.6	0.9	88.8	44.6
LOS	E	E	F	B	F	D	A	F	D
Approach Delay		68.1		24.2		50.5			52.0
Approach LOS		E		C		D			D

Intersection Summary	
Cycle Length: 120	
Actuated Cycle Length: 120	
Offset: 100 (83%), Referenced to phase 2:NBT and 6:SBT, Start of Green	
Natural Cycle: 120	
Control Type: Actuated-Coordinated	
Maximum v/c Ratio: 1.07	
Intersection Signal Delay: 52.6	Intersection LOS: D
Intersection Capacity Utilization 89.1%	ICU Level of Service E
Analysis Period (min) 15	

Splits and Phases: 16: 107th Ave & Grand Ave

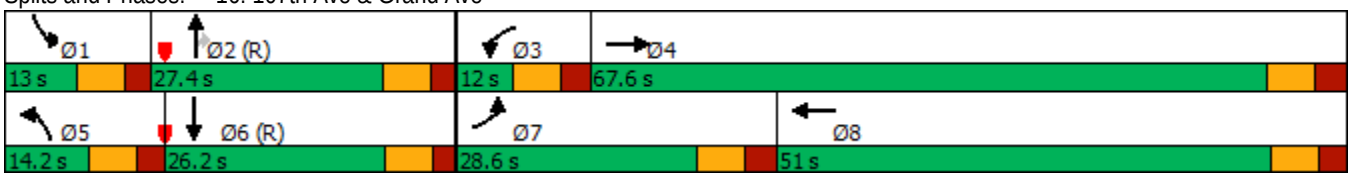

Lane Group	EBL	EBT	WBL	WBT	NBL	NBT	NBR	SBL	SBT
Lane Configurations									
Traffic Volume (vph)	260	2260	40	1310	40	260	40	60	200
Future Volume (vph)	260	2260	40	1310	40	260	40	60	200
Turn Type	Prot	NA	Prot	NA	Prot	NA	Perm	Prot	NA
Protected Phases	7	4	3	8	5	2		1	6
Permitted Phases							2		
Detector Phase	7	4	3	8	5	2	2	1	6
Switch Phase									
Minimum Initial (s)	7.0	7.0	7.0	7.0	5.0	7.0	7.0	5.0	7.0
Minimum Split (s)	13.1	64.1	13.4	24.4	11.5	24.5	24.5	11.5	24.5
Total Split (s)	27.2	66.0	13.4	52.2	12.1	28.6	28.6	12.0	28.5
Total Split (%)	22.7%	55.0%	11.2%	43.5%	10.1%	23.8%	23.8%	10.0%	23.8%
Yellow Time (s)	4.3	4.3	4.3	4.3	4.3	4.3	4.3	4.3	4.3
All-Red Time (s)	1.8	1.8	2.1	2.1	2.2	2.2	2.2	2.2	2.2
Lost Time Adjust (s)	0.0	0.0	0.0	0.0	0.0	0.0	0.0	0.0	0.0
Total Lost Time (s)	6.1	6.1	6.4	6.4	6.5	6.5	6.5	6.5	6.5
Lead/Lag	Lead	Lag	Lead	Lag	Lead	Lag	Lag	Lead	Lag
Lead-Lag Optimize?	Yes	Yes	Yes	Yes	Yes	Yes	Yes	Yes	Yes
Recall Mode	None	None	None	None	None	C-Max	C-Max	None	C-Max
Act Effct Green (s)	20.7	61.7	7.0	45.3	5.6	22.7	22.7	5.8	25.3
Actuated g/C Ratio	0.17	0.51	0.06	0.38	0.05	0.19	0.19	0.05	0.21
v/c Ratio	0.93	0.95	0.43	0.91	0.52	0.80	0.09	0.76	0.44
Control Delay	74.2	6.2	79.6	15.4	78.5	64.9	0.4	103.7	34.7
Queue Delay	0.0	0.0	0.0	0.0	0.0	0.0	0.0	0.0	0.0
Total Delay	74.2	6.2	79.6	15.4	78.5	64.9	0.4	103.7	34.7
LOS	E	A	E	B	E	E	A	F	C
Approach Delay		13.1		16.9		59.0			45.8
Approach LOS		B		B		E			D

Intersection Summary	
Cycle Length: 120	
Actuated Cycle Length: 120	
Offset: 36 (30%), Referenced to phase 2:NBT and 6:SBT, Start of Green	
Natural Cycle: 115	
Control Type: Actuated-Coordinated	
Maximum v/c Ratio: 0.95	
Intersection Signal Delay: 20.1	Intersection LOS: C
Intersection Capacity Utilization 89.3%	ICU Level of Service E
Analysis Period (min) 15	

Splits and Phases: 20: 103rd Ave & Grand Ave

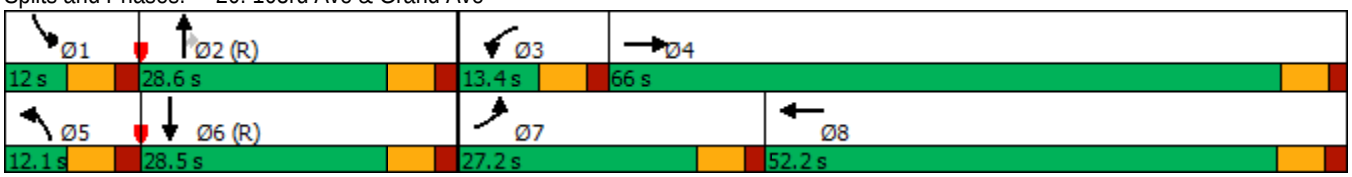

Lane Group	EBL	EBT	WBL	WBT	WBR	NBL	NBT	NBR	SBL	SBT	SBR
Lane Configurations											
Traffic Volume (vph)	430	1950	20	1400	580	70	520	40	280	230	190
Future Volume (vph)	430	1950	20	1400	580	70	520	40	280	230	190
Turn Type	Prot	NA	Prot	NA	Perm	Prot	NA	Perm	Prot	NA	Perm
Protected Phases	7	4	3	8		5	2		1	6	
Permitted Phases					8			2			6
Detector Phase	7	4	3	8	8	5	2	2	1	6	6
Switch Phase											
Minimum Initial (s)	7.0	7.0	7.0	7.0	7.0	5.0	7.0	7.0	5.0	7.0	7.0
Minimum Split (s)	13.6	24.6	13.6	24.6	24.6	11.4	24.4	24.4	11.4	24.4	24.4
Total Split (s)	24.2	59.2	13.6	48.6	48.6	13.0	28.8	28.8	18.4	34.2	34.2
Total Split (%)	20.2%	49.3%	11.3%	40.5%	40.5%	10.8%	24.0%	24.0%	15.3%	28.5%	28.5%
Yellow Time (s)	4.3	4.3	4.3	4.3	4.3	4.3	4.3	4.3	4.3	4.3	4.3
All-Red Time (s)	2.3	2.3	2.3	2.3	2.3	2.1	2.1	2.1	2.1	2.1	2.1
Lost Time Adjust (s)	0.0	0.0	0.0	0.0	0.0	0.0	0.0	0.0	0.0	0.0	0.0
Total Lost Time (s)	6.6	6.6	6.6	6.6	6.6	6.4	6.4	6.4	6.4	6.4	6.4
Lead/Lag	Lead	Lag	Lead	Lag	Lag	Lead	Lag	Lag	Lead	Lag	Lag
Lead-Lag Optimize?	Yes	Yes	Yes	Yes	Yes	Yes	Yes	Yes	Yes	Yes	Yes
Recall Mode	None	None	None	None	None	None	C-Max	C-Max	None	C-Max	C-Max
Act Effct Green (s)	17.6	58.0	7.0	42.0	42.0	6.5	22.4	22.4	12.0	30.4	30.4
Actuated g/C Ratio	0.15	0.48	0.06	0.35	0.35	0.05	0.19	0.19	0.10	0.25	0.25
v/c Ratio	0.94	0.89	0.11	0.88	0.94	0.42	0.87	0.09	0.91	0.29	0.38
Control Delay	79.4	10.9	55.0	43.8	48.2	62.0	61.9	0.4	83.6	38.2	7.0
Queue Delay	0.0	0.0	0.0	0.0	0.0	0.0	0.0	0.0	0.0	0.0	0.0
Total Delay	79.4	10.9	55.0	43.8	48.2	62.0	61.9	0.4	83.6	38.2	7.0
LOS	E	B	D	D	D	E	E	A	F	D	A
Approach Delay		23.1		45.2			58.0			47.9	
Approach LOS		C		D			E			D	

Intersection Summary	
Cycle Length: 120	
Actuated Cycle Length: 120	
Offset: 108 (90%), Referenced to phase 2:NBT and 6:SBT, Start of Green	
Natural Cycle: 110	
Control Type: Actuated-Coordinated	
Maximum v/c Ratio: 0.94	
Intersection Signal Delay: 37.6	Intersection LOS: D
Intersection Capacity Utilization 88.4%	ICU Level of Service E
Analysis Period (min) 15	

Splits and Phases: 25: 99th Ave & Grand Ave

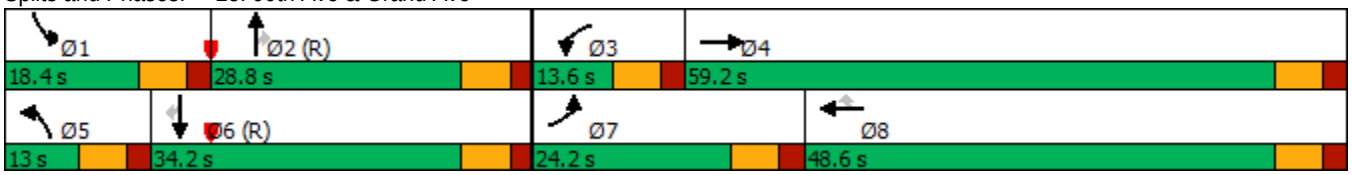

Lane Group	EBT	WBL	WBT
Lane Configurations			
Traffic Volume (vph)	1850	60	2020
Future Volume (vph)	1850	60	2020
Turn Type	NA	Prot	NA
Protected Phases	4	3	8
Permitted Phases			
Detector Phase	4	3	8
Switch Phase			
Minimum Initial (s)	7.0	7.0	7.0
Minimum Split (s)	23.8	12.8	23.8
Total Split (s)	94.0	16.0	110.0
Total Split (%)	85.5%	14.5%	100.0%
Yellow Time (s)	4.3	4.3	4.3
All-Red Time (s)	1.5	1.5	1.5
Lost Time Adjust (s)	0.0	0.0	0.0
Total Lost Time (s)	5.8	5.8	5.8
Lead/Lag	Lag	Lead	
Lead-Lag Optimize?	Yes	Yes	
Recall Mode	None	None	None
Act Effct Green (s)	94.3	7.8	110.0
Actuated g/C Ratio	0.86	0.07	1.00
v/c Ratio	0.58	0.27	0.44
Control Delay	3.4	53.6	1.7
Queue Delay	0.1	0.0	0.0
Total Delay	3.5	53.6	1.7
LOS	A	D	A
Approach Delay	3.5		3.1
Approach LOS	A		A

Intersection Summary	
Cycle Length: 110	
Actuated Cycle Length: 110	
Offset: 5 (5%), Referenced to phase 2: and 6:, Start of Green	
Natural Cycle: 50	
Control Type: Actuated-Coordinated	
Maximum v/c Ratio: 0.58	
Intersection Signal Delay: 3.3	Intersection LOS: A
Intersection Capacity Utilization 95.4%	ICU Level of Service F
Analysis Period (min) 15	

Splits and Phases: 30: SR-101L On Ramp & Grand Ave

Lane Group	EBT	WBT	NBL	NBR
Lane Configurations				
Traffic Volume (vph)	1850	1430	650	100
Future Volume (vph)	1850	1430	650	100
Turn Type	NA	NA	Prot	Perm
Protected Phases	4	8	2	
Permitted Phases				2
Detector Phase	4	8	2	2
Switch Phase				
Minimum Initial (s)	7.0	7.0	7.0	7.0
Minimum Split (s)	24.3	23.8	24.6	24.6
Total Split (s)	66.0	66.0	44.0	44.0
Total Split (%)	60.0%	60.0%	40.0%	40.0%
Yellow Time (s)	4.3	4.3	4.3	4.3
All-Red Time (s)	2.0	1.5	2.3	2.3
Lost Time Adjust (s)	0.0	0.0	0.0	0.0
Total Lost Time (s)	6.3	5.8	6.6	6.6
Lead/Lag				
Lead-Lag Optimize?				
Recall Mode	None	None	C-Max	C-Max
Act Effct Green (s)	56.9	57.4	40.2	40.2
Actuated g/C Ratio	0.52	0.52	0.37	0.37
v/c Ratio	0.76	0.40	0.57	0.19
Control Delay	20.8	16.1	31.0	24.7
Queue Delay	0.4	0.0	0.0	0.0
Total Delay	21.2	16.1	31.0	24.7
LOS	C	B	C	C
Approach Delay	21.2	16.1	30.1	
Approach LOS	C	B	C	

Intersection Summary	
Cycle Length: 110	
Actuated Cycle Length: 110	
Offset: 92 (84%), Referenced to phase 2:NBL and 6:, Start of Green	
Natural Cycle: 60	
Control Type: Actuated-Coordinated	
Maximum v/c Ratio: 0.76	
Intersection Signal Delay: 21.1	Intersection LOS: C
Intersection Capacity Utilization 95.4%	ICU Level of Service F
Analysis Period (min) 15	

Splits and Phases: 34: SR-101L Off Ramp & Grand Ave

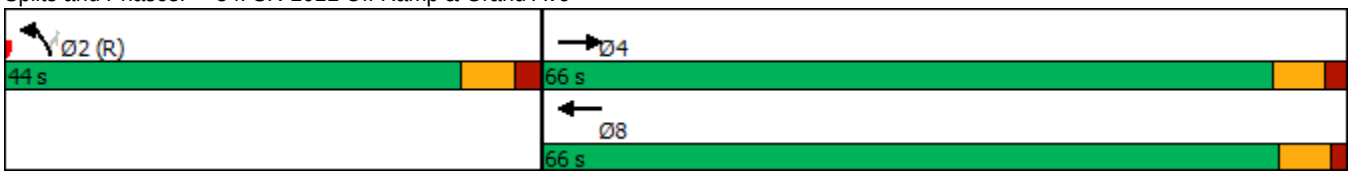

Lane Group	EBL	EBT	WBL	WBT	WBR	NBL	NBT	SBL	SBT	SBR
Lane Configurations										
Traffic Volume (vph)	640	1240	40	650	220	150	410	200	150	630
Future Volume (vph)	640	1240	40	650	220	150	410	200	150	630
Turn Type	Prot	NA	Prot	NA	Perm	Prot	NA	Prot	NA	pm+ov
Protected Phases	7	4	3	8		5	2	1	6	7
Permitted Phases					8					6
Detector Phase	7	4	3	8	8	5	2	1	6	7
Switch Phase										
Minimum Initial (s)	7.0	7.0	7.0	7.0	7.0	5.0	7.0	5.0	7.0	7.0
Minimum Split (s)	13.7	24.7	13.3	24.3	24.3	11.9	24.9	11.7	26.5	13.7
Total Split (s)	37.4	50.1	13.5	26.2	26.2	26.0	30.4	26.0	30.4	37.4
Total Split (%)	31.2%	41.8%	11.3%	21.8%	21.8%	21.7%	25.3%	21.7%	25.3%	31.2%
Yellow Time (s)	4.3	4.3	4.3	4.3	4.3	4.3	4.3	4.3	4.3	4.3
All-Red Time (s)	2.4	2.4	2.0	2.0	2.0	2.6	2.6	2.4	2.4	2.4
Lost Time Adjust (s)	0.0	0.0	0.0	0.0	0.0	0.0	0.0	0.0	0.0	0.0
Total Lost Time (s)	6.7	6.7	6.3	6.3	6.3	6.9	6.9	6.7	6.7	6.7
Lead/Lag	Lead	Lag	Lead	Lag	Lag	Lead	Lag	Lead	Lag	Lead
Lead-Lag Optimize?	Yes	Yes	Yes	Yes	Yes	Yes	Yes	Yes	Yes	Yes
Recall Mode	None	None	None	None	None	None	C-Max	None	C-Max	None
Act Effct Green (s)	28.9	44.6	7.1	20.1	20.1	15.7	26.5	17.9	28.7	64.3
Actuated g/C Ratio	0.24	0.37	0.06	0.17	0.17	0.13	0.22	0.15	0.24	0.54
v/c Ratio	0.84	0.76	0.41	0.84	0.52	0.71	0.68	0.83	0.37	0.76
Control Delay	53.5	36.3	66.8	58.3	9.8	66.8	47.9	58.8	47.6	39.1
Queue Delay	0.0	0.0	0.0	0.0	0.0	0.0	0.0	0.0	0.0	0.0
Total Delay	53.5	36.3	66.8	58.3	9.8	66.8	47.9	58.8	47.6	39.1
LOS	D	D	E	E	A	E	D	E	D	D
Approach Delay		41.9		46.9			52.4		44.4	
Approach LOS		D		D			D		D	

Intersection Summary	
Cycle Length: 120	
Actuated Cycle Length: 120	
Offset: 89 (74%), Referenced to phase 2:NBT and 6:SBT, Start of Green	
Natural Cycle: 90	
Control Type: Actuated-Coordinated	
Maximum v/c Ratio: 0.84	
Intersection Signal Delay: 45.0	Intersection LOS: D
Intersection Capacity Utilization 78.2%	ICU Level of Service D
Analysis Period (min) 15	

Splits and Phases: 37: 91st Ave & Grand Ave

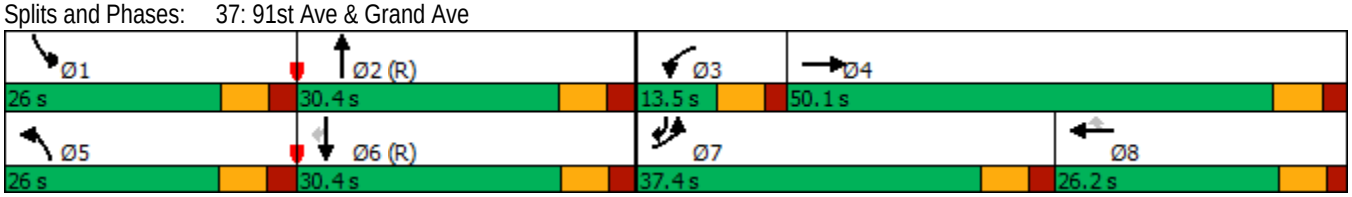

Lane Group	EBL	EBT	WBL	WBT	WBR	NBL	NBT	NBR	SBL	SBT
Lane Configurations										
Traffic Volume (vph)	80	20	150	10	100	110	1060	100	60	680
Future Volume (vph)	80	20	150	10	100	110	1060	100	60	680
Turn Type	Prot	NA	Prot	NA	Perm	Prot	NA	Perm	Prot	NA
Protected Phases	7	4	3	8		5	2		1	6
Permitted Phases					8			2		
Detector Phase	7	4	3	8	8	5	2	2	1	6
Switch Phase										
Minimum Initial (s)	5.0	7.0	5.0	7.0	7.0	5.0	7.0	7.0	7.0	7.0
Minimum Split (s)	11.3	24.3	11.1	24.1	24.1	11.1	24.1	24.1	12.8	23.8
Total Split (s)	19.0	24.3	19.3	24.6	24.6	22.0	60.4	60.4	16.0	54.4
Total Split (%)	15.8%	20.3%	16.1%	20.5%	20.5%	18.3%	50.3%	50.3%	13.3%	45.3%
Yellow Time (s)	4.3	4.3	4.3	4.3	4.3	4.3	4.3	4.3	4.3	4.3
All-Red Time (s)	2.0	2.0	1.8	1.8	1.8	1.8	1.8	1.8	1.5	1.5
Lost Time Adjust (s)	0.0	0.0	0.0	0.0	0.0	0.0	0.0	0.0	0.0	0.0
Total Lost Time (s)	6.3	6.3	6.1	6.1	6.1	6.1	6.1	6.1	5.8	5.8
Lead/Lag	Lead	Lag	Lead	Lag	Lag	Lead	Lag	Lag	Lead	Lag
Lead-Lag Optimize?	Yes	Yes	Yes	Yes	Yes	Yes	Yes	Yes	Yes	Yes
Recall Mode	None	None	None	None	None	None	C-Max	C-Max	None	C-Max
Act Effct Green (s)	10.6	22.9	10.9	9.5	20.6	12.9	58.0	58.0	9.1	51.6
Actuated g/C Ratio	0.09	0.19	0.09	0.08	0.17	0.11	0.48	0.48	0.08	0.43
v/c Ratio	0.56	0.42	0.58	0.67	0.29	0.64	0.68	0.13	0.49	0.56
Control Delay	66.2	13.0	67.2	75.8	5.5	78.7	8.0	0.4	65.7	27.5
Queue Delay	0.0	0.0	0.0	0.0	0.0	0.0	0.0	0.0	0.0	0.0
Total Delay	66.2	13.0	67.2	75.8	5.5	78.7	8.0	0.4	65.7	27.5
LOS	E	B	E	E	A	E	A	A	E	C
Approach Delay		30.0		46.1			13.5			30.3
Approach LOS		C		D			B			C

Intersection Summary	
Cycle Length: 120	
Actuated Cycle Length: 120	
Offset: 0 (0%), Referenced to phase 2:NBT and 6:SBT, Start of Green	
Natural Cycle: 90	
Control Type: Actuated-Coordinated	
Maximum v/c Ratio: 0.68	
Intersection Signal Delay: 23.7	Intersection LOS: C
Intersection Capacity Utilization 71.5%	ICU Level of Service C
Analysis Period (min) 15	

Splits and Phases: 42: Cactus Rd & 91st Ave

Lane Group	EBT	WBL	WBT	NBL
Lane Configurations				
Traffic Volume (vph)	1790	70	2840	240
Future Volume (vph)	1790	70	2840	240
Turn Type	NA	Prot	NA	Prot
Protected Phases	4	3	8	2
Permitted Phases				
Detector Phase	4	3	8	2
Switch Phase				
Minimum Initial (s)	7.0	5.0	7.0	7.0
Minimum Split (s)	23.8	10.3	23.8	24.6
Total Split (s)	63.2	12.8	76.0	34.0
Total Split (%)	57.5%	11.6%	69.1%	30.9%
Yellow Time (s)	4.3	4.3	4.3	4.3
All-Red Time (s)	1.5	1.0	1.5	2.3
Lost Time Adjust (s)	0.0	0.0	0.0	0.0
Total Lost Time (s)	5.8	5.3	5.8	6.6
Lead/Lag	Lag	Lead		
Lead-Lag Optimize?	Yes	Yes		
Recall Mode	None	None	None	C-Max
Act Effct Green (s)	60.0	7.3	70.2	27.4
Actuated g/C Ratio	0.55	0.07	0.64	0.25
v/c Ratio	0.76	0.64	0.94	0.83
Control Delay	22.1	75.0	25.6	53.9
Queue Delay	0.0	0.0	0.0	0.0
Total Delay	22.1	75.0	25.6	53.9
LOS	C	E	C	D
Approach Delay	22.1		26.8	53.9
Approach LOS	C		C	D

Intersection Summary	
Cycle Length: 110	
Actuated Cycle Length: 110	
Offset: 0 (0%), Referenced to phase 2:NBL and 6:, Start of Green	
Natural Cycle: 90	
Control Type: Actuated-Coordinated	
Maximum v/c Ratio: 0.94	
Intersection Signal Delay: 26.8	Intersection LOS: C
Intersection Capacity Utilization 84.6%	ICU Level of Service E
Analysis Period (min) 15	

Splits and Phases: 7: 113th Ave & Grand Ave

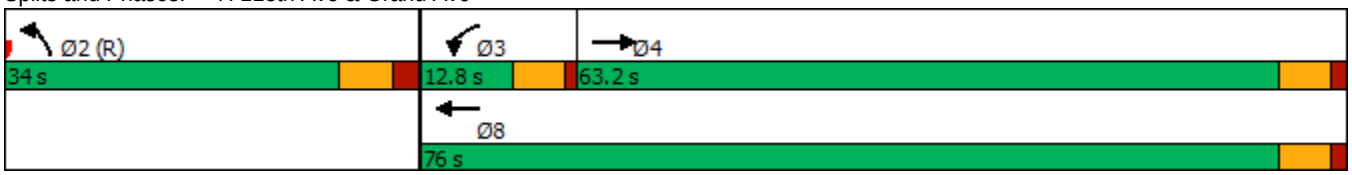

Lane Group	EBL	EBT	WBL	WBT	NBL	NBT	NBR	SBL	SBT	SBR
Lane Configurations										
Traffic Volume (vph)	90	1750	130	2400	210	170	190	60	150	310
Future Volume (vph)	90	1750	130	2400	210	170	190	60	150	310
Turn Type	Prot	NA	Prot	NA	Prot	NA	Perm	Prot	NA	pm+ov
Protected Phases	7	4	3	8	5	2		1	6	7
Permitted Phases							2			6
Detector Phase	7	4	3	8	5	2	2	1	6	7
Switch Phase										
Minimum Initial (s)	7.0	7.0	7.0	7.0	7.0	7.0	7.0	7.0	7.0	7.0
Minimum Split (s)	13.7	24.7	13.3	24.3	24.6	24.6	24.6	24.3	24.3	13.7
Total Split (s)	16.6	82.2	17.4	83.0	24.6	26.1	26.1	24.3	25.8	16.6
Total Split (%)	11.1%	54.8%	11.6%	55.3%	16.4%	17.4%	17.4%	16.2%	17.2%	11.1%
Yellow Time (s)	4.3	4.3	4.3	4.3	4.3	4.3	4.3	4.3	4.3	4.3
All-Red Time (s)	2.4	2.4	2.0	2.0	2.3	2.3	2.3	2.0	2.0	2.4
Lost Time Adjust (s)	0.0	0.0	0.0	0.0	0.0	0.0	0.0	0.0	0.0	0.0
Total Lost Time (s)	6.7	6.7	6.3	6.3	6.6	6.6	6.6	6.3	6.3	6.7
Lead/Lag	Lead	Lag	Lead	Lag	Lead	Lag	Lag	Lead	Lag	Lead
Lead-Lag Optimize?	Yes	Yes	Yes	Yes	Yes	Yes	Yes	Yes	Yes	Yes
Recall Mode	None	None	None	None	Max	C-Max	C-Max	Max	Max	None
Act Effct Green (s)	9.0	76.3	10.3	77.6	18.0	19.5	19.5	18.0	19.5	34.8
Actuated g/C Ratio	0.06	0.51	0.07	0.52	0.12	0.13	0.13	0.12	0.13	0.23
v/c Ratio	0.47	0.77	0.59	0.99	0.55	0.40	0.54	0.30	0.66	0.78
Control Delay	75.5	32.2	78.2	51.3	67.9	62.8	13.5	64.5	75.8	55.6
Queue Delay	0.0	0.0	0.0	0.0	0.0	0.0	0.0	0.0	0.0	0.0
Total Delay	75.5	32.2	78.2	51.3	67.9	62.8	13.5	64.5	75.8	55.6
LOS	E	C	E	D	E	E	B	E	E	E
Approach Delay		34.2		52.7		48.2			62.5	
Approach LOS		C		D		D			E	

Intersection Summary	
Cycle Length: 150	
Actuated Cycle Length: 150	
Offset: 0 (0%), Referenced to phase 2:NBT, Start of Green	
Natural Cycle: 150	
Control Type: Actuated-Coordinated	
Maximum v/c Ratio: 0.99	
Intersection Signal Delay: 46.8	Intersection LOS: D
Intersection Capacity Utilization 88.3%	ICU Level of Service E
Analysis Period (min) 15	

Splits and Phases: 11: 111th Ave & Grand Ave

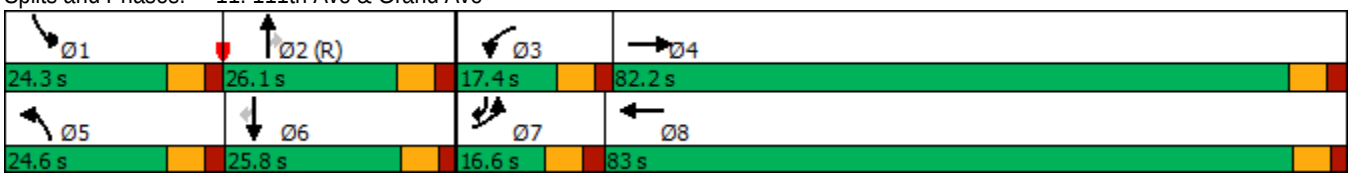

Lane Group	EBL	EBT	WBL	WBT	NBL	NBT	NBR	SBL	SBT
Lane Configurations									
Traffic Volume (vph)	80	1840	90	2200	210	230	70	100	290
Future Volume (vph)	80	1840	90	2200	210	230	70	100	290
Turn Type	Prot	NA	Prot	NA	Prot	NA	Perm	Prot	NA
Protected Phases	7	4	3	8	5	2		1	6
Permitted Phases							2		
Detector Phase	7	4	3	8	5	2	2	1	6
Switch Phase									
Minimum Initial (s)	7.0	7.0	7.0	7.0	5.0	7.0	7.0	5.0	7.0
Minimum Split (s)	14.3	25.3	14.0	25.0	11.7	24.7	24.7	11.5	24.5
Total Split (s)	14.6	58.6	14.0	58.0	22.2	26.3	26.3	21.1	25.2
Total Split (%)	12.2%	48.8%	11.7%	48.3%	18.5%	21.9%	21.9%	17.6%	21.0%
Yellow Time (s)	4.3	4.3	4.3	4.3	4.3	4.3	4.3	4.3	4.3
All-Red Time (s)	3.0	3.0	2.7	2.7	2.4	2.4	2.4	2.2	2.2
Lost Time Adjust (s)	0.0	0.0	0.0	0.0	0.0	0.0	0.0	0.0	0.0
Total Lost Time (s)	7.3	7.3	7.0	7.0	6.7	6.7	6.7	6.5	6.5
Lead/Lag	Lead	Lag	Lead	Lag	Lead	Lag	Lag	Lead	Lag
Lead-Lag Optimize?	Yes	Yes	Yes	Yes	Yes	Yes	Yes	Yes	Yes
Recall Mode	None	None	None	None	None	C-Max	C-Max	None	C-Max
Act Effct Green (s)	7.3	51.3	7.0	51.0	15.5	22.2	22.2	12.0	18.7
Actuated g/C Ratio	0.06	0.43	0.06	0.42	0.13	0.18	0.18	0.10	0.16
v/c Ratio	0.81	0.95	0.94	1.12	0.99	0.38	0.18	0.61	0.89
Control Delay	103.2	43.8	90.8	68.8	109.7	45.5	0.9	65.5	56.3
Queue Delay	0.0	0.0	0.0	0.0	0.0	0.0	0.0	0.0	0.0
Total Delay	103.2	43.8	90.8	68.8	109.7	45.5	0.9	65.5	56.3
LOS	F	D	F	E	F	D	A	E	E
Approach Delay		46.2		69.7		65.8			57.7
Approach LOS		D		E		E			E

Intersection Summary	
Cycle Length: 120	
Actuated Cycle Length: 120	
Offset: 96 (80%), Referenced to phase 2:NBT and 6:SBT, Start of Green	
Natural Cycle: 150	
Control Type: Actuated-Coordinated	
Maximum v/c Ratio: 1.12	
Intersection Signal Delay: 59.5	Intersection LOS: E
Intersection Capacity Utilization 99.4%	ICU Level of Service F
Analysis Period (min) 15	

Splits and Phases: 16: 107th Ave & Grand Ave

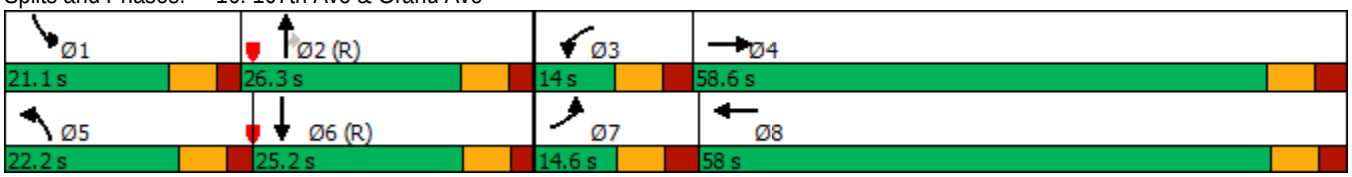

Lane Group	EBL	EBT	WBL	WBT	NBL	NBT	NBR	SBL	SBT
Lane Configurations									
Traffic Volume (vph)	120	1750	30	2090	70	200	60	200	250
Future Volume (vph)	120	1750	30	2090	70	200	60	200	250
Turn Type	Prot	NA	Prot	NA	Prot	NA	Perm	Prot	NA
Protected Phases	7	4	3	8	5	2		1	6
Permitted Phases							2		
Detector Phase	7	4	3	8	5	2	2	1	6
Switch Phase									
Minimum Initial (s)	5.0	7.0	5.0	7.0	5.0	7.0	7.0	5.0	7.0
Minimum Split (s)	11.1	24.1	11.4	24.4	11.5	24.5	24.5	11.5	24.5
Total Split (s)	15.4	60.9	11.5	57.0	15.0	26.3	26.3	21.3	32.6
Total Split (%)	12.8%	50.8%	9.6%	47.5%	12.5%	21.9%	21.9%	17.8%	27.2%
Yellow Time (s)	4.3	4.3	4.3	4.3	4.3	4.3	4.3	4.3	4.3
All-Red Time (s)	1.8	1.8	2.1	2.1	2.2	2.2	2.2	2.2	2.2
Lost Time Adjust (s)	0.0	0.0	0.0	0.0	0.0	0.0	0.0	0.0	0.0
Total Lost Time (s)	6.1	6.1	6.4	6.4	6.5	6.5	6.5	6.5	6.5
Lead/Lag	Lead	Lag	Lead	Lag	Lead	Lag	Lag	Lead	Lag
Lead-Lag Optimize?	Yes	Yes	Yes	Yes	Yes	Yes	Yes	Yes	Yes
Recall Mode	None	None	None	None	None	C-Max	C-Max	None	C-Max
Act Effct Green (s)	9.3	59.4	5.1	50.6	8.1	19.8	19.8	14.8	29.1
Actuated g/C Ratio	0.08	0.50	0.04	0.42	0.07	0.16	0.16	0.12	0.24
v/c Ratio	0.95	0.77	0.44	1.09	0.64	0.71	0.17	0.99	0.57
Control Delay	111.1	8.2	81.9	59.1	78.1	60.9	0.9	110.2	33.7
Queue Delay	0.0	0.0	0.0	0.0	0.0	0.0	0.0	0.0	0.0
Total Delay	111.1	8.2	81.9	59.1	78.1	60.9	0.9	110.2	33.7
LOS	F	A	F	E	E	E	A	F	C
Approach Delay		14.8		59.4		53.7			56.5
Approach LOS		B		E		D			E

Intersection Summary	
Cycle Length: 120	
Actuated Cycle Length: 120	
Offset: 48 (40%), Referenced to phase 2:NBT and 6:SBT, Start of Green	
Natural Cycle: 130	
Control Type: Actuated-Coordinated	
Maximum v/c Ratio: 1.09	
Intersection Signal Delay: 42.1	Intersection LOS: D
Intersection Capacity Utilization 91.7%	ICU Level of Service F
Analysis Period (min) 15	

Splits and Phases: 20: 103rd Ave & Grand Ave

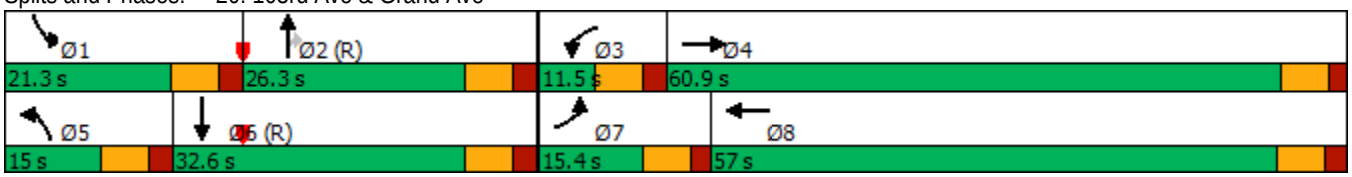

Lane Group	EBL	EBT	WBL	WBT	WBR	NBL	NBT	NBR	SBL	SBT	SBR
Lane Configurations											
Traffic Volume (vph)	210	1770	80	1960	350	50	320	50	340	470	250
Future Volume (vph)	210	1770	80	1960	350	50	320	50	340	470	250
Turn Type	Prot	NA	Prot	NA	Perm	Prot	NA	Perm	Prot	NA	Perm
Protected Phases	7	4	3	8		5	2		1	6	
Permitted Phases					8			2			6
Detector Phase	7	4	3	8	8	5	2	2	1	6	6
Switch Phase											
Minimum Initial (s)	5.0	7.0	5.0	7.0	7.0	5.0	7.0	7.0	5.0	7.0	7.0
Minimum Split (s)	11.6	24.6	11.6	24.6	24.6	11.4	24.4	24.4	11.4	24.4	24.4
Total Split (s)	16.0	62.2	11.8	58.0	58.0	11.6	25.8	25.8	20.2	34.4	34.4
Total Split (%)	13.3%	51.8%	9.8%	48.3%	48.3%	9.7%	21.5%	21.5%	16.8%	28.7%	28.7%
Yellow Time (s)	4.3	4.3	4.3	4.3	4.3	4.3	4.3	4.3	4.3	4.3	4.3
All-Red Time (s)	2.3	2.3	2.3	2.3	2.3	2.1	2.1	2.1	2.1	2.1	2.1
Lost Time Adjust (s)	0.0	0.0	0.0	0.0	0.0	0.0	0.0	0.0	0.0	0.0	0.0
Total Lost Time (s)	6.6	6.6	6.6	6.6	6.6	6.4	6.4	6.4	6.4	6.4	6.4
Lead/Lag	Lead	Lag	Lead	Lag	Lag	Lead	Lag	Lag	Lead	Lag	Lag
Lead-Lag Optimize?	Yes	Yes	Yes	Yes	Yes	Yes	Yes	Yes	Yes	Yes	Yes
Recall Mode	None	None	None	None	None	None	C-Max	C-Max	None	C-Max	C-Max
Act Effct Green (s)	9.4	55.6	5.2	51.4	51.4	5.2	19.4	19.4	13.8	30.3	30.3
Actuated g/C Ratio	0.08	0.46	0.04	0.43	0.43	0.04	0.16	0.16	0.12	0.25	0.25
v/c Ratio	0.85	0.84	0.58	0.97	0.45	0.36	0.60	0.12	0.93	0.57	0.53
Control Delay	89.8	19.4	72.0	46.9	8.1	62.8	51.7	0.6	83.3	42.8	21.6
Queue Delay	0.0	0.0	0.0	0.0	0.0	0.0	0.0	0.0	0.0	0.0	0.0
Total Delay	89.8	19.4	72.0	46.9	8.1	62.8	51.7	0.6	83.3	42.8	21.6
LOS	F	B	E	D	A	E	D	A	F	D	C
Approach Delay		26.6		42.1			47.0			50.8	
Approach LOS		C		D			D			D	

Intersection Summary	
Cycle Length: 120	
Actuated Cycle Length: 120	
Offset: 0 (0%), Referenced to phase 2:NBT and 6:SBT, Start of Green	
Natural Cycle: 110	
Control Type: Actuated-Coordinated	
Maximum v/c Ratio: 0.97	
Intersection Signal Delay: 38.7	Intersection LOS: D
Intersection Capacity Utilization 84.1%	ICU Level of Service E
Analysis Period (min) 15	

Splits and Phases: 25: 99th Ave & Grand Ave

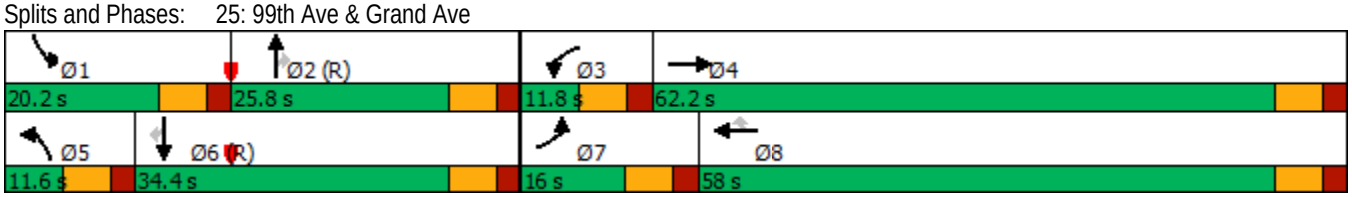

Lane Group	EBT	WBL	WBT
Lane Configurations			
Traffic Volume (vph)	1530	180	2390
Future Volume (vph)	1530	180	2390
Turn Type	NA	Prot	NA
Protected Phases	4	3	8
Permitted Phases			
Detector Phase	4	3	8
Switch Phase			
Minimum Initial (s)	7.0	5.0	7.0
Minimum Split (s)	23.8	10.3	23.8
Total Split (s)	89.0	21.0	110.0
Total Split (%)	80.9%	19.1%	100.0%
Yellow Time (s)	4.3	4.3	4.3
All-Red Time (s)	1.5	1.0	1.5
Lost Time Adjust (s)	0.0	0.0	0.0
Total Lost Time (s)	5.8	5.3	5.8
Lead/Lag	Lag	Lead	
Lead-Lag Optimize?	Yes	Yes	
Recall Mode	None	None	None
Act Effct Green (s)	87.4	11.5	110.0
Actuated g/C Ratio	0.79	0.10	1.00
v/c Ratio	0.60	0.54	0.51
Control Delay	5.0	47.6	3.4
Queue Delay	0.0	0.0	0.0
Total Delay	5.0	47.6	3.4
LOS	A	D	A
Approach Delay	5.0		6.5
Approach LOS	A		A

Intersection Summary	
Cycle Length: 110	
Actuated Cycle Length: 110	
Offset: 100 (91%), Referenced to phase 2: and 6:, Start of Green	
Natural Cycle: 45	
Control Type: Actuated-Coordinated	
Maximum v/c Ratio: 0.60	
Intersection Signal Delay: 5.8	Intersection LOS: A
Intersection Capacity Utilization 58.0%	ICU Level of Service B
Analysis Period (min) 15	

Splits and Phases: 30: SR-101L On Ramp & Grand Ave

Lane Group	EBT	WBT	NBL	NBR
Lane Configurations				
Traffic Volume (vph)	1530	2120	450	140
Future Volume (vph)	1530	2120	450	140
Turn Type	NA	NA	Prot	Perm
Protected Phases	4	8	2	
Permitted Phases				2
Detector Phase	4	8	2	2
Switch Phase				
Minimum Initial (s)	7.0	7.0	7.0	7.0
Minimum Split (s)	24.3	23.8	24.6	24.6
Total Split (s)	69.0	69.0	41.0	41.0
Total Split (%)	62.7%	62.7%	37.3%	37.3%
Yellow Time (s)	4.3	4.3	4.3	4.3
All-Red Time (s)	2.0	1.5	2.3	2.3
Lost Time Adjust (s)	0.0	0.0	0.0	0.0
Total Lost Time (s)	6.3	5.8	6.6	6.6
Lead/Lag				
Lead-Lag Optimize?				
Recall Mode	None	None	C-Max	C-Max
Act Effct Green (s)	55.4	55.9	41.7	41.7
Actuated g/C Ratio	0.50	0.51	0.38	0.38
v/c Ratio	0.65	0.60	0.38	0.25
Control Delay	17.7	19.5	27.1	23.3
Queue Delay	0.2	0.0	0.0	0.0
Total Delay	17.9	19.5	27.1	23.3
LOS	B	B	C	C
Approach Delay	17.9	19.5	26.2	
Approach LOS	B	B	C	

Intersection Summary	
Cycle Length: 110	
Actuated Cycle Length: 110	
Offset: 84 (76%), Referenced to phase 2:NBL and 6:, Start of Green	
Natural Cycle: 55	
Control Type: Actuated-Coordinated	
Maximum v/c Ratio: 0.65	
Intersection Signal Delay: 19.8	Intersection LOS: B
Intersection Capacity Utilization 58.0%	ICU Level of Service B
Analysis Period (min) 15	

Splits and Phases: 34: SR-101L Off Ramp & Grand Ave

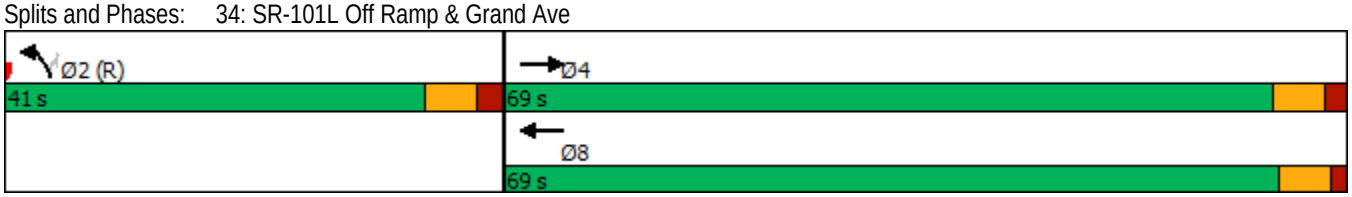

Lane Group	EBL	EBT	WBL	WBT	WBR	NBL	NBT	SBL	SBT	SBR
Lane Configurations										
Traffic Volume (vph)	650	930	50	1490	370	130	360	630	330	460
Future Volume (vph)	650	930	50	1490	370	130	360	630	330	460
Turn Type	Prot	NA	Prot	NA	Perm	Prot	NA	Prot	NA	pm+ov
Protected Phases	7	4	3	8		5	2	1	6	7
Permitted Phases					8					6
Detector Phase	7	4	3	8	8	5	2	1	6	7
Switch Phase										
Minimum Initial (s)	7.0	7.0	7.0	7.0	7.0	5.0	7.0	5.0	7.0	7.0
Minimum Split (s)	13.7	24.7	13.3	24.3	24.3	11.9	24.9	11.7	24.7	13.7
Total Split (s)	23.0	42.6	15.4	35.0	35.0	19.9	27.0	35.0	42.1	23.0
Total Split (%)	19.2%	35.5%	12.8%	29.2%	29.2%	16.6%	22.5%	29.2%	35.1%	19.2%
Yellow Time (s)	4.3	4.3	4.3	4.3	4.3	4.3	4.3	4.3	4.3	4.3
All-Red Time (s)	2.4	2.4	2.0	2.0	2.0	2.6	2.6	2.4	2.4	2.4
Lost Time Adjust (s)	0.0	0.0	0.0	0.0	0.0	0.0	0.0	0.0	0.0	0.0
Total Lost Time (s)	6.7	6.7	6.3	6.3	6.3	6.9	6.9	6.7	6.7	6.7
Lead/Lag	Lead	Lag	Lead	Lag	Lag	Lead	Lag	Lead	Lag	Lead
Lead-Lag Optimize?	Yes	Yes	Yes	Yes	Yes	Yes	Yes	Yes	Yes	Yes
Recall Mode	None	None	None	None	None	None	C-Max	None	C-Max	None
Act Effct Green (s)	16.3	39.3	8.4	28.7	28.7	12.3	20.1	28.3	36.1	59.1
Actuated g/C Ratio	0.14	0.33	0.07	0.24	0.24	0.10	0.17	0.24	0.30	0.49
v/c Ratio	1.50	0.66	0.44	1.32	0.68	0.76	0.72	1.63	0.64	0.60
Control Delay	274.1	37.4	64.5	186.7	19.1	78.1	54.1	315.1	46.6	32.0
Queue Delay	0.0	0.0	0.0	0.0	0.0	0.0	0.0	0.0	0.0	0.0
Total Delay	274.1	37.4	64.5	186.7	19.1	78.1	54.1	315.1	46.6	32.0
LOS	F	D	E	F	B	E	D	F	D	C
Approach Delay		129.6		151.1			59.9		161.0	
Approach LOS		F		F			E		F	

Intersection Summary	
Cycle Length: 120	
Actuated Cycle Length: 120	
Offset: 90 (75%), Referenced to phase 2:NBT and 6:SBT, Start of Green	
Natural Cycle: 150	
Control Type: Actuated-Coordinated	
Maximum v/c Ratio: 1.63	
Intersection Signal Delay: 138.4	Intersection LOS: F
Intersection Capacity Utilization 115.6%	ICU Level of Service H
Analysis Period (min) 15	

Splits and Phases: 37: 91st Ave & Grand Ave

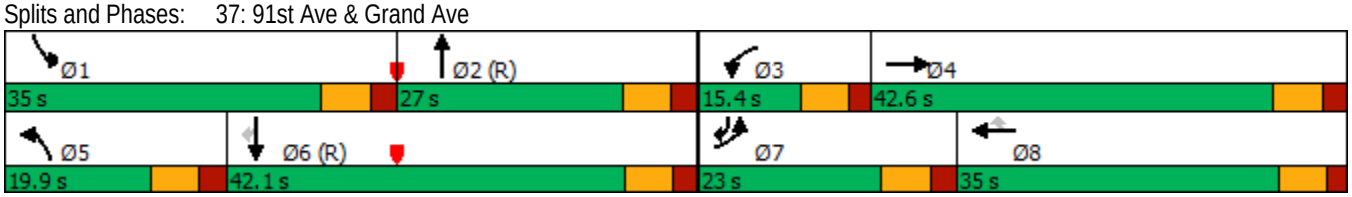

Lane Group	EBL	EBT	WBL	WBT	WBR	NBL	NBT	NBR	SBL	SBT
Lane Configurations										
Traffic Volume (vph)	50	20	550	10	170	40	810	520	260	790
Future Volume (vph)	50	20	550	10	170	40	810	520	260	790
Turn Type	Prot	NA	Prot	NA	Perm	Prot	NA	Perm	Prot	NA
Protected Phases	7	4	3	8		5	2		1	6
Permitted Phases					8			2		
Detector Phase	7	4	3	8	8	5	2	2	1	6
Switch Phase										
Minimum Initial (s)	5.0	7.0	5.0	7.0	7.0	5.0	7.0	7.0	7.0	7.0
Minimum Split (s)	11.3	24.3	11.1	24.1	24.1	11.1	24.1	24.1	12.8	23.8
Total Split (s)	15.3	24.3	30.0	39.0	39.0	13.1	38.7	38.7	27.0	52.6
Total Split (%)	12.8%	20.3%	25.0%	32.5%	32.5%	10.9%	32.3%	32.3%	22.5%	43.8%
Yellow Time (s)	4.3	4.3	4.3	4.3	4.3	4.3	4.3	4.3	4.3	4.3
All-Red Time (s)	2.0	2.0	1.8	1.8	1.8	1.8	1.8	1.8	1.5	1.5
Lost Time Adjust (s)	0.0	0.0	0.0	0.0	0.0	0.0	0.0	0.0	0.0	0.0
Total Lost Time (s)	6.3	6.3	6.1	6.1	6.1	6.1	6.1	6.1	5.8	5.8
Lead/Lag	Lead	Lag	Lead	Lag	Lag	Lead	Lag	Lag	Lead	Lag
Lead-Lag Optimize?	Yes	Yes	Yes	Yes	Yes	Yes	Yes	Yes	Yes	Yes
Recall Mode	None	None	None	None	None	None	C-Max	C-Max	None	C-Max
Act Effct Green (s)	8.0	18.6	23.3	23.3	36.2	6.7	33.1	33.1	20.7	49.4
Actuated g/C Ratio	0.07	0.16	0.19	0.19	0.30	0.06	0.28	0.28	0.17	0.41
v/c Ratio	0.45	0.35	0.93	0.92	0.30	0.43	0.88	0.75	0.92	0.61
Control Delay	65.4	16.0	82.1	80.9	5.5	75.6	18.8	7.5	83.9	30.5
Queue Delay	0.0	0.0	0.0	0.0	0.0	0.0	0.0	0.0	0.0	0.0
Total Delay	65.4	16.0	82.1	80.9	5.5	75.6	18.8	7.5	83.9	30.5
LOS	E	B	F	F	A	E	B	A	F	C
Approach Delay		31.3		63.8			16.2			43.4
Approach LOS		C		E			B			D

Intersection Summary	
Cycle Length: 120	
Actuated Cycle Length: 120	
Offset: 0 (0%), Referenced to phase 2:NBT and 6:SBT, Start of Green	
Natural Cycle: 100	
Control Type: Actuated-Coordinated	
Maximum v/c Ratio: 0.93	
Intersection Signal Delay: 36.1	Intersection LOS: D
Intersection Capacity Utilization 74.0%	ICU Level of Service D
Analysis Period (min) 15	

Splits and Phases: 42: Cactus Rd & 91st Ave

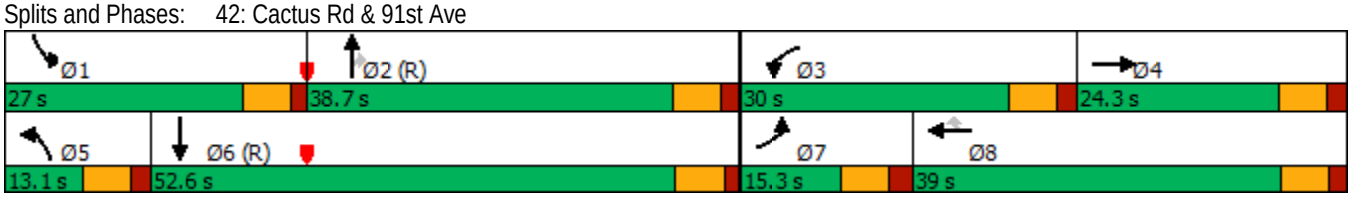

Lane Group	EBT	WBL	WBT	NBL
Lane Configurations				
Traffic Volume (vph)	2460	70	1290	120
Future Volume (vph)	2460	70	1290	120
Turn Type	NA	Prot	NA	Prot
Protected Phases	4	3	8	2
Permitted Phases				
Detector Phase	4	3	8	2
Switch Phase				
Minimum Initial (s)	7.0	7.0	7.0	7.0
Minimum Split (s)	23.8	12.8	23.8	24.6
Total Split (s)	77.0	14.8	91.8	28.2
Total Split (%)	64.2%	12.3%	76.5%	23.5%
Yellow Time (s)	4.3	4.3	4.3	4.3
All-Red Time (s)	1.5	1.5	1.5	2.3
Lost Time Adjust (s)	0.0	0.0	0.0	0.0
Total Lost Time (s)	5.8	5.8	5.8	6.6
Lead/Lag	Lag	Lead		
Lead-Lag Optimize?	Yes	Yes		
Recall Mode	None	None	None	C-Max
Act Effct Green (s)	71.4	8.6	83.2	24.4
Actuated g/C Ratio	0.60	0.07	0.69	0.20
v/c Ratio	0.94	0.61	0.41	0.65
Control Delay	29.7	75.0	8.1	48.5
Queue Delay	0.0	0.0	0.0	0.0
Total Delay	29.7	75.0	8.1	48.5
LOS	C	E	A	D
Approach Delay	29.7		11.5	48.5
Approach LOS	C		B	D

Intersection Summary	
Cycle Length: 120	
Actuated Cycle Length: 120	
Offset: 3 (3%), Referenced to phase 2:NBL and 6:, Start of Green	
Natural Cycle: 90	
Control Type: Actuated-Coordinated	
Maximum v/c Ratio: 0.94	
Intersection Signal Delay: 24.7	Intersection LOS: C
Intersection Capacity Utilization 81.3%	ICU Level of Service D
Analysis Period (min) 15	

Splits and Phases: 7: 113th Ave & Grand Ave

Lane Group	EBL	EBT	WBL	WBT	NBL	NBT	NBR	SBL	SBT	SBR
Lane Configurations										
Traffic Volume (vph)	170	2430	110	1220	100	160	190	50	110	60
Future Volume (vph)	170	2430	110	1220	100	160	190	50	110	60
Turn Type	Prot	NA	Prot	NA	Prot	NA	Perm	Prot	NA	pm+ov
Protected Phases	7	4	3	8	5	2		1	6	7
Permitted Phases							2			6
Detector Phase	7	4	3	8	5	2	2	1	6	7
Switch Phase										
Minimum Initial (s)	7.0	7.0	7.0	7.0	7.0	7.0	7.0	7.0	7.0	7.0
Minimum Split (s)	13.7	24.7	13.3	24.3	24.6	24.6	24.6	24.3	24.3	13.7
Total Split (s)	20.6	86.0	13.6	79.0	24.8	26.0	26.0	24.4	25.6	20.6
Total Split (%)	13.7%	57.3%	9.1%	52.7%	16.5%	17.3%	17.3%	16.3%	17.1%	13.7%
Yellow Time (s)	4.3	4.3	4.3	4.3	4.3	4.3	4.3	4.3	4.3	4.3
All-Red Time (s)	2.4	2.4	2.0	2.0	2.3	2.3	2.3	2.0	2.0	2.4
Lost Time Adjust (s)	0.0	0.0	0.0	0.0	0.0	0.0	0.0	0.0	0.0	0.0
Total Lost Time (s)	6.7	6.7	6.3	6.3	6.6	6.6	6.6	6.3	6.3	6.7
Lead/Lag	Lead	Lag	Lead	Lag	Lead	Lag	Lag	Lead	Lag	Lead
Lead-Lag Optimize?	Yes	Yes	Yes	Yes	Yes	Yes	Yes	Yes	Yes	Yes
Recall Mode	None	None	None	None	Max	C-Max	C-Max	Max	Max	None
Act Effct Green (s)	12.5	79.3	7.3	74.1	18.2	19.4	19.4	18.1	19.3	38.1
Actuated g/C Ratio	0.08	0.53	0.05	0.49	0.12	0.13	0.13	0.12	0.13	0.25
v/c Ratio	0.64	0.99	0.74	0.56	0.26	0.38	0.55	0.25	0.50	0.14
Control Delay	76.9	50.0	96.1	27.8	61.7	62.5	15.3	63.2	68.6	7.8
Queue Delay	0.0	1.5	0.0	0.0	0.0	0.0	0.0	0.0	0.0	0.0
Total Delay	76.9	51.5	96.1	27.8	61.7	62.5	15.3	63.2	68.6	7.8
LOS	E	D	F	C	E	E	B	E	E	A
Approach Delay		53.1		33.3		42.4			50.8	
Approach LOS		D		C		D			D	

Intersection Summary	
Cycle Length: 150	
Actuated Cycle Length: 150	
Offset: 0 (0%), Referenced to phase 2:NBT, Start of Green	
Natural Cycle: 140	
Control Type: Actuated-Coordinated	
Maximum v/c Ratio: 0.99	
Intersection Signal Delay: 46.2	Intersection LOS: D
Intersection Capacity Utilization 86.9%	ICU Level of Service E
Analysis Period (min) 15	

Splits and Phases: 11: 111th Ave & Grand Ave

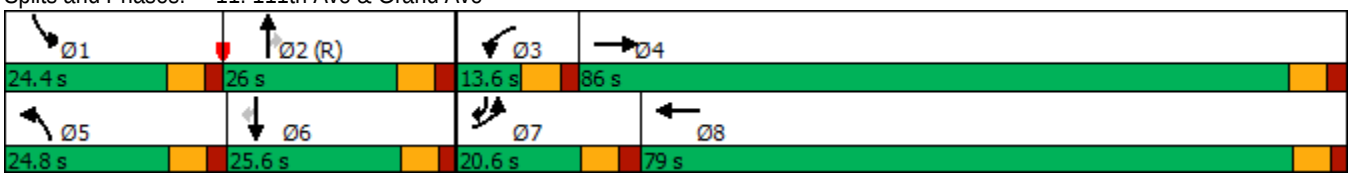

Lane Group	EBL	EBT	WBL	WBT	NBL	NBT	NBR	SBL	SBT
Lane Configurations									
Traffic Volume (vph)	190	2470	70	1290	90	220	90	60	220
Future Volume (vph)	190	2470	70	1290	90	220	90	60	220
Turn Type	Prot	NA	Prot	NA	Prot	NA	Perm	Prot	NA
Protected Phases	7	4	3	8	5	2		1	6
Permitted Phases							2		
Detector Phase	7	4	3	8	5	2	2	1	6
Switch Phase									
Minimum Initial (s)	7.0	7.0	5.0	7.0	5.0	7.0	7.0	5.0	7.0
Minimum Split (s)	14.3	25.3	12.0	25.0	11.7	24.7	24.7	11.5	24.5
Total Split (s)	28.6	67.6	12.0	51.0	14.2	27.4	27.4	13.0	26.2
Total Split (%)	23.8%	56.3%	10.0%	42.5%	11.8%	22.8%	22.8%	10.8%	21.8%
Yellow Time (s)	4.3	4.3	4.3	4.3	4.3	4.3	4.3	4.3	4.3
All-Red Time (s)	3.0	3.0	2.7	2.7	2.4	2.4	2.4	2.2	2.2
Lost Time Adjust (s)	0.0	0.0	0.0	0.0	0.0	0.0	0.0	0.0	0.0
Total Lost Time (s)	7.3	7.3	7.0	7.0	6.7	6.7	6.7	6.5	6.5
Lead/Lag	Lead	Lag	Lead	Lag	Lead	Lag	Lag	Lead	Lag
Lead-Lag Optimize?	Yes	Yes	Yes	Yes	Yes	Yes	Yes	Yes	Yes
Recall Mode	None	None	None	None	None	C-Max	C-Max	None	C-Max
Act Effct Green (s)	18.2	60.3	5.0	47.1	7.5	23.3	23.3	6.5	19.7
Actuated g/C Ratio	0.15	0.50	0.04	0.39	0.06	0.19	0.19	0.05	0.16
v/c Ratio	0.77	1.07	1.06	0.76	0.88	0.34	0.20	0.68	0.55
Control Delay	68.0	68.1	164.3	16.9	114.5	44.6	0.9	88.8	44.6
Queue Delay	0.0	0.0	0.0	0.0	0.0	0.0	0.0	0.0	0.0
Total Delay	68.0	68.1	164.3	16.9	114.5	44.6	0.9	88.8	44.6
LOS	E	E	F	B	F	D	A	F	D
Approach Delay		68.1		24.2		50.5			52.0
Approach LOS		E		C		D			D

Intersection Summary	
Cycle Length: 120	
Actuated Cycle Length: 120	
Offset: 100 (83%), Referenced to phase 2:NBT and 6:SBT, Start of Green	
Natural Cycle: 120	
Control Type: Actuated-Coordinated	
Maximum v/c Ratio: 1.07	
Intersection Signal Delay: 52.6	Intersection LOS: D
Intersection Capacity Utilization 89.1%	ICU Level of Service E
Analysis Period (min) 15	

Splits and Phases: 16: 107th Ave & Grand Ave

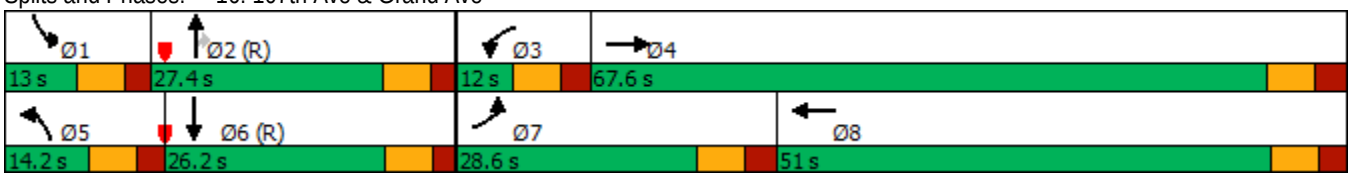

Lane Group	EBL	EBT	WBL	WBT	NBL	NBT	NBR	SBL	SBT
Lane Configurations									
Traffic Volume (vph)	260	2260	40	1310	40	260	40	60	200
Future Volume (vph)	260	2260	40	1310	40	260	40	60	200
Turn Type	Prot	NA	Prot	NA	Prot	NA	Perm	Prot	NA
Protected Phases	7	4	3	8	5	2		1	6
Permitted Phases							2		
Detector Phase	7	4	3	8	5	2	2	1	6
Switch Phase									
Minimum Initial (s)	7.0	7.0	7.0	7.0	5.0	7.0	7.0	5.0	7.0
Minimum Split (s)	13.1	64.1	13.4	24.4	11.5	24.5	24.5	11.5	24.5
Total Split (s)	27.2	66.0	13.4	52.2	12.1	28.6	28.6	12.0	28.5
Total Split (%)	22.7%	55.0%	11.2%	43.5%	10.1%	23.8%	23.8%	10.0%	23.8%
Yellow Time (s)	4.3	4.3	4.3	4.3	4.3	4.3	4.3	4.3	4.3
All-Red Time (s)	1.8	1.8	2.1	2.1	2.2	2.2	2.2	2.2	2.2
Lost Time Adjust (s)	0.0	0.0	0.0	0.0	0.0	0.0	0.0	0.0	0.0
Total Lost Time (s)	6.1	6.1	6.4	6.4	6.5	6.5	6.5	6.5	6.5
Lead/Lag	Lead	Lag	Lead	Lag	Lead	Lag	Lag	Lead	Lag
Lead-Lag Optimize?	Yes	Yes	Yes	Yes	Yes	Yes	Yes	Yes	Yes
Recall Mode	None	None	None	None	None	C-Max	C-Max	None	C-Max
Act Effct Green (s)	20.7	61.7	7.0	45.3	5.6	22.7	22.7	5.8	25.3
Actuated g/C Ratio	0.17	0.51	0.06	0.38	0.05	0.19	0.19	0.05	0.21
v/c Ratio	0.93	0.95	0.43	0.91	0.52	0.80	0.09	0.76	0.44
Control Delay	74.2	6.2	79.6	15.4	78.5	64.9	0.4	103.7	34.7
Queue Delay	0.0	0.0	0.0	0.0	0.0	0.0	0.0	0.0	0.0
Total Delay	74.2	6.2	79.6	15.4	78.5	64.9	0.4	103.7	34.7
LOS	E	A	E	B	E	E	A	F	C
Approach Delay		13.1		16.9		59.0			45.8
Approach LOS		B		B		E			D

Intersection Summary	
Cycle Length: 120	
Actuated Cycle Length: 120	
Offset: 36 (30%), Referenced to phase 2:NBT and 6:SBT, Start of Green	
Natural Cycle: 115	
Control Type: Actuated-Coordinated	
Maximum v/c Ratio: 0.95	
Intersection Signal Delay: 20.1	Intersection LOS: C
Intersection Capacity Utilization 89.3%	ICU Level of Service E
Analysis Period (min) 15	

Splits and Phases: 20: 103rd Ave & Grand Ave

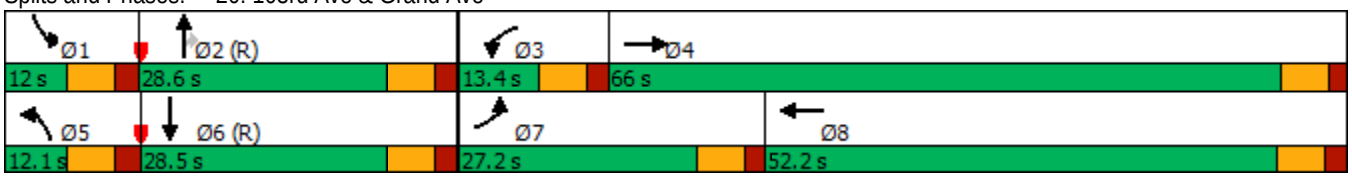

Lane Group	EBL	EBT	WBL	WBT	WBR	NBL	NBT	NBR	SBL	SBT	SBR
Lane Configurations											
Traffic Volume (vph)	430	1950	20	1400	580	70	520	40	280	230	190
Future Volume (vph)	430	1950	20	1400	580	70	520	40	280	230	190
Turn Type	Prot	NA	Prot	NA	Perm	Prot	NA	Perm	Prot	NA	Perm
Protected Phases	7	4	3	8		5	2		1	6	
Permitted Phases					8			2			6
Detector Phase	7	4	3	8	8	5	2	2	1	6	6
Switch Phase											
Minimum Initial (s)	7.0	7.0	7.0	7.0	7.0	5.0	7.0	7.0	5.0	7.0	7.0
Minimum Split (s)	13.6	24.6	13.6	24.6	24.6	11.4	24.4	24.4	11.4	24.4	24.4
Total Split (s)	24.2	59.2	13.6	48.6	48.6	13.0	28.8	28.8	18.4	34.2	34.2
Total Split (%)	20.2%	49.3%	11.3%	40.5%	40.5%	10.8%	24.0%	24.0%	15.3%	28.5%	28.5%
Yellow Time (s)	4.3	4.3	4.3	4.3	4.3	4.3	4.3	4.3	4.3	4.3	4.3
All-Red Time (s)	2.3	2.3	2.3	2.3	2.3	2.1	2.1	2.1	2.1	2.1	2.1
Lost Time Adjust (s)	0.0	0.0	0.0	0.0	0.0	0.0	0.0	0.0	0.0	0.0	0.0
Total Lost Time (s)	6.6	6.6	6.6	6.6	6.6	6.4	6.4	6.4	6.4	6.4	6.4
Lead/Lag	Lead	Lag	Lead	Lag	Lag	Lead	Lag	Lag	Lead	Lag	Lag
Lead-Lag Optimize?	Yes	Yes	Yes	Yes	Yes	Yes	Yes	Yes	Yes	Yes	Yes
Recall Mode	None	None	None	None	None	None	C-Max	C-Max	None	C-Max	C-Max
Act Effct Green (s)	17.6	58.0	7.0	42.0	42.0	6.5	22.4	22.4	12.0	30.4	30.4
Actuated g/C Ratio	0.15	0.48	0.06	0.35	0.35	0.05	0.19	0.19	0.10	0.25	0.25
v/c Ratio	0.94	0.89	0.11	0.88	0.94	0.42	0.87	0.09	0.91	0.29	0.38
Control Delay	79.4	10.9	55.0	43.8	48.2	62.0	61.9	0.4	83.6	38.2	7.0
Queue Delay	0.0	0.0	0.0	0.0	0.0	0.0	0.0	0.0	0.0	0.0	0.0
Total Delay	79.4	10.9	55.0	43.8	48.2	62.0	61.9	0.4	83.6	38.2	7.0
LOS	E	B	D	D	D	E	E	A	F	D	A
Approach Delay		23.1		45.2			58.0			47.9	
Approach LOS		C		D			E			D	

Intersection Summary	
Cycle Length: 120	
Actuated Cycle Length: 120	
Offset: 108 (90%), Referenced to phase 2:NBT and 6:SBT, Start of Green	
Natural Cycle: 110	
Control Type: Actuated-Coordinated	
Maximum v/c Ratio: 0.94	
Intersection Signal Delay: 37.6	Intersection LOS: D
Intersection Capacity Utilization 88.4%	ICU Level of Service E
Analysis Period (min) 15	

Splits and Phases: 25: 99th Ave & Grand Ave

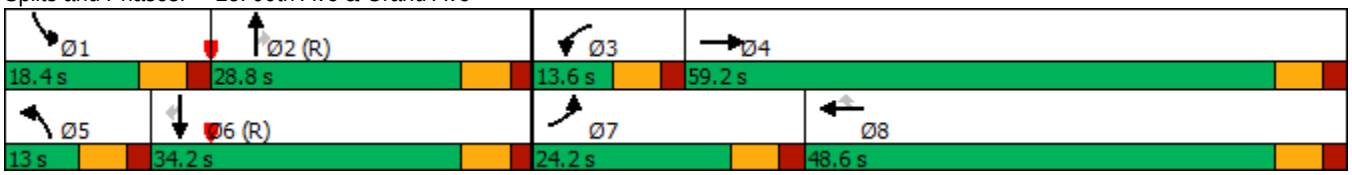

Lane Group	EBT	WBL	WBT
Lane Configurations			
Traffic Volume (vph)	1850	60	2740
Future Volume (vph)	1850	60	2740
Turn Type	NA	Prot	NA
Protected Phases	4	3	8
Permitted Phases			
Detector Phase	4	3	8
Switch Phase			
Minimum Initial (s)	7.0	7.0	7.0
Minimum Split (s)	23.8	12.8	23.8
Total Split (s)	94.0	16.0	110.0
Total Split (%)	85.5%	14.5%	100.0%
Yellow Time (s)	4.3	4.3	4.3
All-Red Time (s)	1.5	1.5	1.5
Lost Time Adjust (s)	0.0	0.0	0.0
Total Lost Time (s)	5.8	5.8	5.8
Lead/Lag	Lag	Lead	
Lead-Lag Optimize?	Yes	Yes	
Recall Mode	None	None	None
Act Effct Green (s)	94.3	7.8	110.0
Actuated g/C Ratio	0.86	0.07	1.00
v/c Ratio	0.58	0.27	0.59
Control Delay	3.4	53.4	2.0
Queue Delay	0.4	0.0	0.0
Total Delay	3.7	53.4	2.0
LOS	A	D	A
Approach Delay	3.7		3.1
Approach LOS	A		A

Intersection Summary	
Cycle Length: 110	
Actuated Cycle Length: 110	
Offset: 5 (5%), Referenced to phase 2: and 6:, Start of Green	
Natural Cycle: 50	
Control Type: Actuated-Coordinated	
Maximum v/c Ratio: 0.59	
Intersection Signal Delay: 3.4	Intersection LOS: A
Intersection Capacity Utilization 115.9%	ICU Level of Service H
Analysis Period (min) 15	

Splits and Phases: 30: SR-101L On Ramp & Grand Ave

Lane Group	EBT	WBT	NBL	NBR
Lane Configurations				
Traffic Volume (vph)	1850	1430	1370	210
Future Volume (vph)	1850	1430	1370	210
Turn Type	NA	NA	Prot	Perm
Protected Phases	4	8	2	
Permitted Phases				2
Detector Phase	4	8	2	2
Switch Phase				
Minimum Initial (s)	7.0	7.0	7.0	7.0
Minimum Split (s)	24.3	23.8	24.6	24.6
Total Split (s)	52.0	52.0	58.0	58.0
Total Split (%)	47.3%	47.3%	52.7%	52.7%
Yellow Time (s)	4.3	4.3	4.3	4.3
All-Red Time (s)	2.0	1.5	2.3	2.3
Lost Time Adjust (s)	0.0	0.0	0.0	0.0
Total Lost Time (s)	6.3	5.8	6.6	6.6
Lead/Lag				
Lead-Lag Optimize?				
Recall Mode	None	None	C-Max	C-Max
Act Effct Green (s)	45.7	46.2	51.4	51.4
Actuated g/C Ratio	0.42	0.42	0.47	0.47
v/c Ratio	0.95	0.50	0.95	0.31
Control Delay	39.5	24.1	41.7	19.7
Queue Delay	17.7	0.0	0.0	0.0
Total Delay	57.2	24.1	41.7	19.7
LOS	E	C	D	B
Approach Delay	57.2	24.1	38.8	
Approach LOS	E	C	D	

Intersection Summary	
Cycle Length: 110	
Actuated Cycle Length: 110	
Offset: 92 (84%), Referenced to phase 2:NBL and 6:, Start of Green	
Natural Cycle: 90	
Control Type: Actuated-Coordinated	
Maximum v/c Ratio: 0.95	
Intersection Signal Delay: 41.5	Intersection LOS: D
Intersection Capacity Utilization 115.9%	ICU Level of Service H
Analysis Period (min) 15	

Splits and Phases: 34: SR-101L Off Ramp & Grand Ave

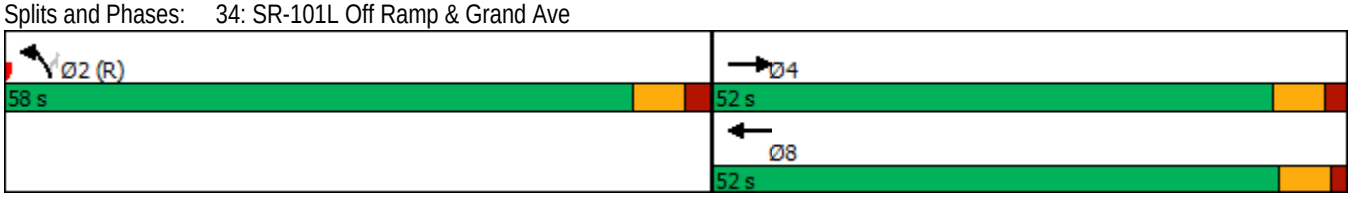

Lane Group	EBL	EBT	WBL	WBT	WBR	NBL	NBT	SBL	SBT	SBR
Lane Configurations										
Traffic Volume (vph)	640	1350	40	650	220	150	410	31	23	96
Future Volume (vph)	640	1350	40	650	220	150	410	31	23	96
Turn Type	Prot	NA	Prot	NA	Perm	Prot	NA	Prot	NA	pm+ov
Protected Phases	7	4	3	8		5	2	1	6	7
Permitted Phases					8					6
Detector Phase	7	4	3	8	8	5	2	1	6	7
Switch Phase										
Minimum Initial (s)	7.0	7.0	7.0	7.0	7.0	5.0	7.0	5.0	7.0	7.0
Minimum Split (s)	13.7	24.7	13.3	24.3	24.3	11.9	24.9	11.7	26.5	13.7
Total Split (s)	39.0	54.5	13.5	29.0	29.0	25.0	38.7	13.3	27.0	39.0
Total Split (%)	32.5%	45.4%	11.3%	24.2%	24.2%	20.8%	32.3%	11.1%	22.5%	32.5%
Yellow Time (s)	4.3	4.3	4.3	4.3	4.3	4.3	4.3	4.3	4.3	4.3
All-Red Time (s)	2.4	2.4	2.0	2.0	2.0	2.6	2.6	2.4	2.4	2.4
Lost Time Adjust (s)	0.0	0.0	0.0	0.0	0.0	0.0	0.0	0.0	0.0	0.0
Total Lost Time (s)	6.7	6.7	6.3	6.3	6.3	6.9	6.9	6.7	6.7	6.7
Lead/Lag	Lead	Lag	Lead	Lag	Lag	Lead	Lag	Lead	Lag	Lead
Lead-Lag Optimize?	Yes	Yes	Yes	Yes	Yes	Yes	Yes	Yes	Yes	Yes
Recall Mode	None	None	None	None	None	None	C-Max	None	C-Max	None
Act Effct Green (s)	29.0	47.0	7.1	22.5	22.5	15.4	40.5	6.5	26.5	62.2
Actuated g/C Ratio	0.24	0.39	0.06	0.19	0.19	0.13	0.34	0.05	0.22	0.52
v/c Ratio	0.84	0.78	0.41	0.75	0.46	0.73	0.45	0.36	0.06	0.12
Control Delay	53.1	35.1	66.8	51.5	5.6	68.7	33.8	95.6	22.4	5.1
Queue Delay	0.0	0.0	0.0	0.0	0.0	0.0	0.0	0.0	0.0	0.0
Total Delay	53.1	35.1	66.8	51.5	5.6	68.7	33.8	95.6	22.4	5.1
LOS	D	D	E	D	A	E	C	F	C	A
Approach Delay		40.7		41.1			42.1		26.7	
Approach LOS		D		D			D		C	

Intersection Summary	
Cycle Length: 120	
Actuated Cycle Length: 120	
Offset: 89 (74%), Referenced to phase 2:NBT and 6:SBT, Start of Green	
Natural Cycle: 90	
Control Type: Actuated-Coordinated	
Maximum v/c Ratio: 0.84	
Intersection Signal Delay: 40.5	Intersection LOS: D
Intersection Capacity Utilization 73.4%	ICU Level of Service D
Analysis Period (min) 15	

Splits and Phases: 37: 91st Ave & Grand Ave

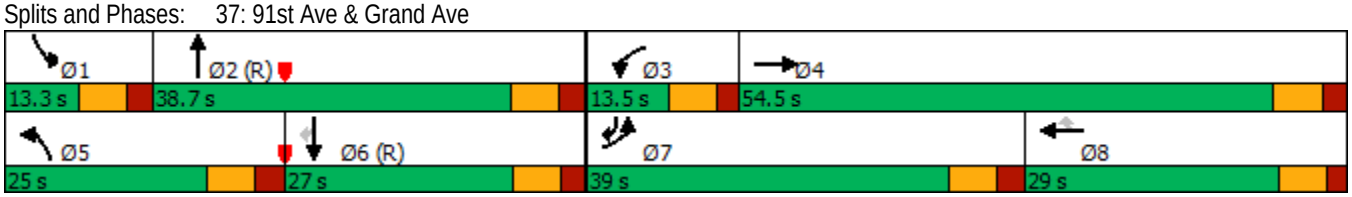

Lane Group	EBL	EBT	WBL	WBT	WBR	NBL	NBT	NBR	SBL	SBT
Lane Configurations										
Traffic Volume (vph)	80	20	150	10	100	110	1060	100	10	10
Future Volume (vph)	80	20	150	10	100	110	1060	100	10	10
Turn Type	Prot	NA	Prot	NA	Perm	Prot	NA	Perm	Prot	NA
Protected Phases	7	4	3	8		5	2		1	6
Permitted Phases					8			2		
Detector Phase	7	4	3	8	8	5	2	2	1	6
Switch Phase										
Minimum Initial (s)	5.0	7.0	5.0	7.0	7.0	5.0	7.0	7.0	7.0	7.0
Minimum Split (s)	11.3	24.3	11.1	24.1	24.1	11.1	24.1	24.1	12.8	23.8
Total Split (s)	20.0	25.0	20.0	25.0	25.0	23.0	62.0	62.0	13.0	52.0
Total Split (%)	16.7%	20.8%	16.7%	20.8%	20.8%	19.2%	51.7%	51.7%	10.8%	43.3%
Yellow Time (s)	4.3	4.3	4.3	4.3	4.3	4.3	4.3	4.3	4.3	4.3
All-Red Time (s)	2.0	2.0	1.8	1.8	1.8	1.8	1.8	1.8	1.5	1.5
Lost Time Adjust (s)	0.0	0.0	0.0	0.0	0.0	0.0	0.0	0.0	0.0	0.0
Total Lost Time (s)	6.3	6.3	6.1	6.1	6.1	6.1	6.1	6.1	5.8	5.8
Lead/Lag	Lead	Lag	Lead	Lag	Lag	Lead	Lag	Lag	Lead	Lag
Lead-Lag Optimize?	Yes	Yes	Yes	Yes	Yes	Yes	Yes	Yes	Yes	Yes
Recall Mode	None	None	None	None	None	None	C-Max	C-Max	None	C-Max
Act Effct Green (s)	10.9	24.1	11.1	9.7	21.7	13.1	66.3	66.3	7.0	50.0
Actuated g/C Ratio	0.09	0.20	0.09	0.08	0.18	0.11	0.55	0.55	0.06	0.42
v/c Ratio	0.55	0.41	0.57	0.66	0.25	0.63	0.60	0.12	0.11	0.02
Control Delay	64.7	12.6	66.0	73.8	1.4	65.2	7.4	0.6	56.0	14.7
Queue Delay	0.0	0.0	0.0	0.0	0.0	0.0	0.0	0.0	0.0	0.0
Total Delay	64.7	12.6	66.0	73.8	1.4	65.2	7.4	0.6	56.0	14.7
LOS	E	B	E	E	A	E	A	A	E	B
Approach Delay		29.2		43.5			11.9			28.4
Approach LOS		C		D			B			C

Intersection Summary	
Cycle Length: 120	
Actuated Cycle Length: 120	
Offset: 0 (0%), Referenced to phase 2:NBT and 6:SBT, Start of Green	
Natural Cycle: 90	
Control Type: Actuated-Coordinated	
Maximum v/c Ratio: 0.66	
Intersection Signal Delay: 19.1	Intersection LOS: B
Intersection Capacity Utilization 61.2%	ICU Level of Service B
Analysis Period (min) 15	

Splits and Phases: 42: Cactus Rd & 91st Ave

Lane Group	EBT	WBL	WBT	NBL
Lane Configurations				
Traffic Volume (vph)	1790	70	2840	240
Future Volume (vph)	1790	70	2840	240
Turn Type	NA	Prot	NA	Prot
Protected Phases	4	3	8	2
Permitted Phases				
Detector Phase	4	3	8	2
Switch Phase				
Minimum Initial (s)	7.0	5.0	7.0	7.0
Minimum Split (s)	23.8	10.3	23.8	24.6
Total Split (s)	63.2	12.8	76.0	34.0
Total Split (%)	57.5%	11.6%	69.1%	30.9%
Yellow Time (s)	4.3	4.3	4.3	4.3
All-Red Time (s)	1.5	1.0	1.5	2.3
Lost Time Adjust (s)	0.0	0.0	0.0	0.0
Total Lost Time (s)	5.8	5.3	5.8	6.6
Lead/Lag	Lag	Lead		
Lead-Lag Optimize?	Yes	Yes		
Recall Mode	None	None	None	C-Max
Act Effct Green (s)	60.0	7.3	70.2	27.4
Actuated g/C Ratio	0.55	0.07	0.64	0.25
v/c Ratio	0.76	0.64	0.94	0.83
Control Delay	22.1	75.0	25.6	53.9
Queue Delay	0.0	0.0	0.0	0.0
Total Delay	22.1	75.0	25.6	53.9
LOS	C	E	C	D
Approach Delay	22.1		26.8	53.9
Approach LOS	C		C	D

Intersection Summary	
Cycle Length: 110	
Actuated Cycle Length: 110	
Offset: 0 (0%), Referenced to phase 2:NBL and 6:, Start of Green	
Natural Cycle: 90	
Control Type: Actuated-Coordinated	
Maximum v/c Ratio: 0.94	
Intersection Signal Delay: 26.8	Intersection LOS: C
Intersection Capacity Utilization 84.6%	ICU Level of Service E
Analysis Period (min) 15	

Splits and Phases: 7: 113th Ave & Grand Ave

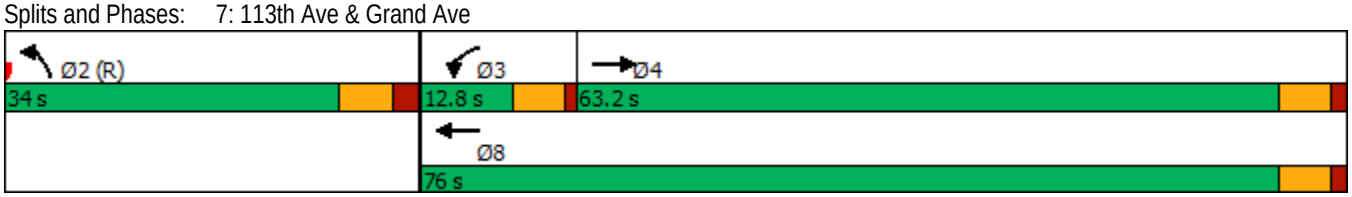

Lane Group	EBL	EBT	WBL	WBT	NBL	NBT	NBR	SBL	SBT	SBR
Lane Configurations										
Traffic Volume (vph)	90	1750	130	2400	210	170	190	60	150	310
Future Volume (vph)	90	1750	130	2400	210	170	190	60	150	310
Turn Type	Prot	NA	Prot	NA	Prot	NA	Perm	Prot	NA	pm+ov
Protected Phases	7	4	3	8	5	2		1	6	7
Permitted Phases							2			6
Detector Phase	7	4	3	8	5	2	2	1	6	7
Switch Phase										
Minimum Initial (s)	7.0	7.0	7.0	7.0	7.0	7.0	7.0	7.0	7.0	7.0
Minimum Split (s)	13.7	24.7	13.3	24.3	24.6	24.6	24.6	24.3	24.3	13.7
Total Split (s)	16.6	82.2	17.4	83.0	24.6	26.1	26.1	24.3	25.8	16.6
Total Split (%)	11.1%	54.8%	11.6%	55.3%	16.4%	17.4%	17.4%	16.2%	17.2%	11.1%
Yellow Time (s)	4.3	4.3	4.3	4.3	4.3	4.3	4.3	4.3	4.3	4.3
All-Red Time (s)	2.4	2.4	2.0	2.0	2.3	2.3	2.3	2.0	2.0	2.4
Lost Time Adjust (s)	0.0	0.0	0.0	0.0	0.0	0.0	0.0	0.0	0.0	0.0
Total Lost Time (s)	6.7	6.7	6.3	6.3	6.6	6.6	6.6	6.3	6.3	6.7
Lead/Lag	Lead	Lag	Lead	Lag	Lead	Lag	Lag	Lead	Lag	Lead
Lead-Lag Optimize?	Yes	Yes	Yes	Yes	Yes	Yes	Yes	Yes	Yes	Yes
Recall Mode	None	None	None	None	Max	C-Max	C-Max	Max	Max	None
Act Effct Green (s)	9.0	76.3	10.3	77.6	18.0	19.5	19.5	18.0	19.5	34.8
Actuated g/C Ratio	0.06	0.51	0.07	0.52	0.12	0.13	0.13	0.12	0.13	0.23
v/c Ratio	0.47	0.77	0.59	0.99	0.55	0.40	0.54	0.30	0.66	0.78
Control Delay	75.5	32.2	78.2	51.3	67.9	62.8	13.5	64.5	75.8	55.6
Queue Delay	0.0	0.0	0.0	0.0	0.0	0.0	0.0	0.0	0.0	0.0
Total Delay	75.5	32.2	78.2	51.3	67.9	62.8	13.5	64.5	75.8	55.6
LOS	E	C	E	D	E	E	B	E	E	E
Approach Delay		34.2		52.7		48.2			62.5	
Approach LOS		C		D		D			E	

Intersection Summary	
Cycle Length: 150	
Actuated Cycle Length: 150	
Offset: 0 (0%), Referenced to phase 2:NBT, Start of Green	
Natural Cycle: 150	
Control Type: Actuated-Coordinated	
Maximum v/c Ratio: 0.99	
Intersection Signal Delay: 46.8	Intersection LOS: D
Intersection Capacity Utilization 88.3%	ICU Level of Service E
Analysis Period (min) 15	

Splits and Phases: 11: 111th Ave & Grand Ave

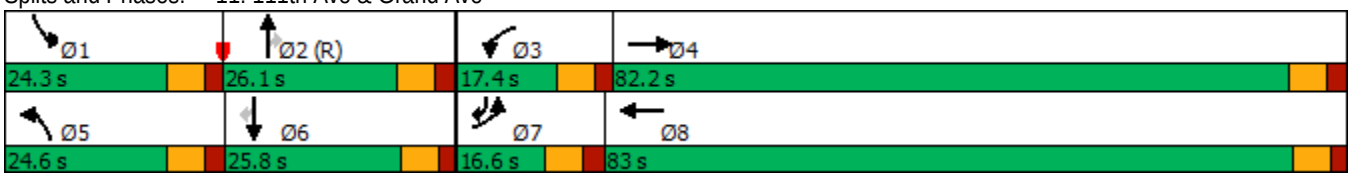

Lane Group	EBL	EBT	WBL	WBT	NBL	NBT	NBR	SBL	SBT
Lane Configurations									
Traffic Volume (vph)	80	1840	90	2200	210	230	70	100	290
Future Volume (vph)	80	1840	90	2200	210	230	70	100	290
Turn Type	Prot	NA	Prot	NA	Prot	NA	Perm	Prot	NA
Protected Phases	7	4	3	8	5	2		1	6
Permitted Phases							2		
Detector Phase	7	4	3	8	5	2	2	1	6
Switch Phase									
Minimum Initial (s)	7.0	7.0	7.0	7.0	5.0	7.0	7.0	5.0	7.0
Minimum Split (s)	14.3	25.3	14.0	25.0	11.7	24.7	24.7	11.5	24.5
Total Split (s)	14.6	58.6	14.0	58.0	22.2	26.3	26.3	21.1	25.2
Total Split (%)	12.2%	48.8%	11.7%	48.3%	18.5%	21.9%	21.9%	17.6%	21.0%
Yellow Time (s)	4.3	4.3	4.3	4.3	4.3	4.3	4.3	4.3	4.3
All-Red Time (s)	3.0	3.0	2.7	2.7	2.4	2.4	2.4	2.2	2.2
Lost Time Adjust (s)	0.0	0.0	0.0	0.0	0.0	0.0	0.0	0.0	0.0
Total Lost Time (s)	7.3	7.3	7.0	7.0	6.7	6.7	6.7	6.5	6.5
Lead/Lag	Lead	Lag	Lead	Lag	Lead	Lag	Lag	Lead	Lag
Lead-Lag Optimize?	Yes	Yes	Yes	Yes	Yes	Yes	Yes	Yes	Yes
Recall Mode	None	None	None	None	None	C-Max	C-Max	None	C-Max
Act Effct Green (s)	7.3	51.3	7.0	51.0	15.5	22.2	22.2	12.0	18.7
Actuated g/C Ratio	0.06	0.43	0.06	0.42	0.13	0.18	0.18	0.10	0.16
v/c Ratio	0.81	0.95	0.94	1.12	0.99	0.38	0.18	0.61	0.89
Control Delay	103.2	43.8	90.8	68.8	109.7	45.5	0.9	65.5	56.3
Queue Delay	0.0	0.0	0.0	0.0	0.0	0.0	0.0	0.0	0.0
Total Delay	103.2	43.8	90.8	68.8	109.7	45.5	0.9	65.5	56.3
LOS	F	D	F	E	F	D	A	E	E
Approach Delay		46.2		69.7		65.8			57.7
Approach LOS		D		E		E			E

Intersection Summary	
Cycle Length: 120	
Actuated Cycle Length: 120	
Offset: 96 (80%), Referenced to phase 2:NBT and 6:SBT, Start of Green	
Natural Cycle: 150	
Control Type: Actuated-Coordinated	
Maximum v/c Ratio: 1.12	
Intersection Signal Delay: 59.5	Intersection LOS: E
Intersection Capacity Utilization 99.4%	ICU Level of Service F
Analysis Period (min) 15	

Splits and Phases: 16: 107th Ave & Grand Ave

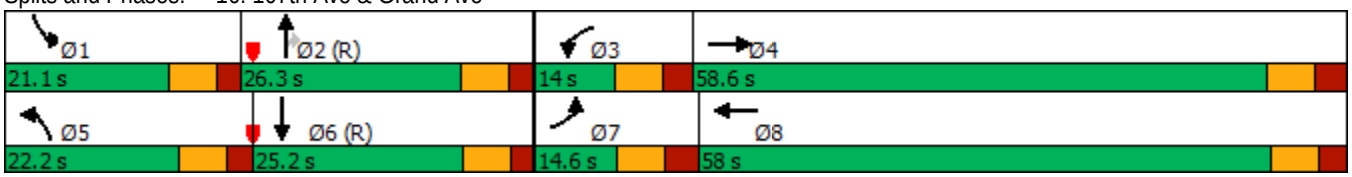

Lane Group	EBL	EBT	WBL	WBT	NBL	NBT	NBR	SBL	SBT
Lane Configurations									
Traffic Volume (vph)	120	1750	30	2090	70	200	60	200	250
Future Volume (vph)	120	1750	30	2090	70	200	60	200	250
Turn Type	Prot	NA	Prot	NA	Prot	NA	Perm	Prot	NA
Protected Phases	7	4	3	8	5	2		1	6
Permitted Phases							2		
Detector Phase	7	4	3	8	5	2	2	1	6
Switch Phase									
Minimum Initial (s)	5.0	7.0	5.0	7.0	5.0	7.0	7.0	5.0	7.0
Minimum Split (s)	11.1	24.1	11.4	24.4	11.5	24.5	24.5	11.5	24.5
Total Split (s)	15.4	60.9	11.5	57.0	15.0	26.3	26.3	21.3	32.6
Total Split (%)	12.8%	50.8%	9.6%	47.5%	12.5%	21.9%	21.9%	17.8%	27.2%
Yellow Time (s)	4.3	4.3	4.3	4.3	4.3	4.3	4.3	4.3	4.3
All-Red Time (s)	1.8	1.8	2.1	2.1	2.2	2.2	2.2	2.2	2.2
Lost Time Adjust (s)	0.0	0.0	0.0	0.0	0.0	0.0	0.0	0.0	0.0
Total Lost Time (s)	6.1	6.1	6.4	6.4	6.5	6.5	6.5	6.5	6.5
Lead/Lag	Lead	Lag	Lead	Lag	Lead	Lag	Lag	Lead	Lag
Lead-Lag Optimize?	Yes	Yes	Yes	Yes	Yes	Yes	Yes	Yes	Yes
Recall Mode	None	None	None	None	None	C-Max	C-Max	None	C-Max
Act Effct Green (s)	9.3	59.4	5.1	50.6	8.1	19.8	19.8	14.8	29.1
Actuated g/C Ratio	0.08	0.50	0.04	0.42	0.07	0.16	0.16	0.12	0.24
v/c Ratio	0.95	0.77	0.44	1.09	0.64	0.71	0.17	0.99	0.57
Control Delay	111.1	8.2	81.9	59.1	78.1	60.9	0.9	110.2	33.7
Queue Delay	0.0	0.0	0.0	0.0	0.0	0.0	0.0	0.0	0.0
Total Delay	111.1	8.2	81.9	59.1	78.1	60.9	0.9	110.2	33.7
LOS	F	A	F	E	E	E	A	F	C
Approach Delay		14.8		59.4		53.7			56.5
Approach LOS		B		E		D			E

Intersection Summary	
Cycle Length: 120	
Actuated Cycle Length: 120	
Offset: 48 (40%), Referenced to phase 2:NBT and 6:SBT, Start of Green	
Natural Cycle: 130	
Control Type: Actuated-Coordinated	
Maximum v/c Ratio: 1.09	
Intersection Signal Delay: 42.1	Intersection LOS: D
Intersection Capacity Utilization 91.7%	ICU Level of Service F
Analysis Period (min) 15	

Splits and Phases: 20: 103rd Ave & Grand Ave

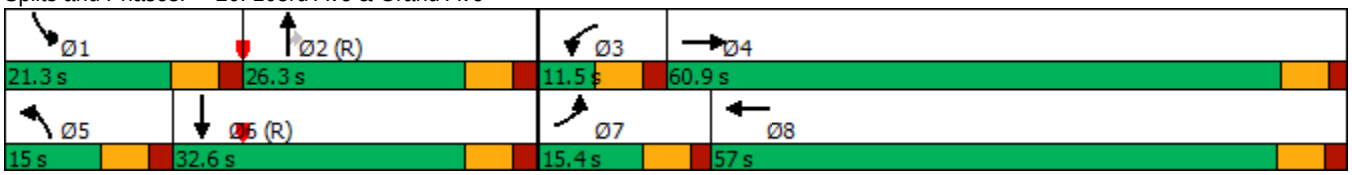

Lane Group	EBL	EBT	WBL	WBT	WBR	NBL	NBT	NBR	SBL	SBT	SBR
Lane Configurations											
Traffic Volume (vph)	210	1770	80	1960	350	50	320	50	340	470	250
Future Volume (vph)	210	1770	80	1960	350	50	320	50	340	470	250
Turn Type	Prot	NA	Prot	NA	Perm	Prot	NA	Perm	Prot	NA	Perm
Protected Phases	7	4	3	8		5	2		1	6	
Permitted Phases					8			2			6
Detector Phase	7	4	3	8	8	5	2	2	1	6	6
Switch Phase											
Minimum Initial (s)	5.0	7.0	5.0	7.0	7.0	5.0	7.0	7.0	5.0	7.0	7.0
Minimum Split (s)	11.6	24.6	11.6	24.6	24.6	11.4	24.4	24.4	11.4	24.4	24.4
Total Split (s)	16.0	62.2	11.8	58.0	58.0	11.6	25.8	25.8	20.2	34.4	34.4
Total Split (%)	13.3%	51.8%	9.8%	48.3%	48.3%	9.7%	21.5%	21.5%	16.8%	28.7%	28.7%
Yellow Time (s)	4.3	4.3	4.3	4.3	4.3	4.3	4.3	4.3	4.3	4.3	4.3
All-Red Time (s)	2.3	2.3	2.3	2.3	2.3	2.1	2.1	2.1	2.1	2.1	2.1
Lost Time Adjust (s)	0.0	0.0	0.0	0.0	0.0	0.0	0.0	0.0	0.0	0.0	0.0
Total Lost Time (s)	6.6	6.6	6.6	6.6	6.6	6.4	6.4	6.4	6.4	6.4	6.4
Lead/Lag	Lead	Lag	Lead	Lag	Lag	Lead	Lag	Lag	Lead	Lag	Lag
Lead-Lag Optimize?	Yes	Yes	Yes	Yes	Yes	Yes	Yes	Yes	Yes	Yes	Yes
Recall Mode	None	None	None	None	None	None	C-Max	C-Max	None	C-Max	C-Max
Act Effct Green (s)	9.4	55.6	5.2	51.4	51.4	5.2	19.4	19.4	13.8	30.3	30.3
Actuated g/C Ratio	0.08	0.46	0.04	0.43	0.43	0.04	0.16	0.16	0.12	0.25	0.25
v/c Ratio	0.85	0.84	0.58	0.97	0.45	0.36	0.60	0.12	0.93	0.57	0.53
Control Delay	89.8	19.4	72.0	46.9	8.1	62.8	51.7	0.6	83.3	42.8	21.6
Queue Delay	0.0	0.0	0.0	0.0	0.0	0.0	0.0	0.0	0.0	0.0	0.0
Total Delay	89.8	19.4	72.0	46.9	8.1	62.8	51.7	0.6	83.3	42.8	21.6
LOS	F	B	E	D	A	E	D	A	F	D	C
Approach Delay		26.6		42.1			47.0			50.8	
Approach LOS		C		D			D			D	

Intersection Summary	
Cycle Length: 120	
Actuated Cycle Length: 120	
Offset: 0 (0%), Referenced to phase 2:NBT and 6:SBT, Start of Green	
Natural Cycle: 110	
Control Type: Actuated-Coordinated	
Maximum v/c Ratio: 0.97	
Intersection Signal Delay: 38.7	Intersection LOS: D
Intersection Capacity Utilization 84.1%	ICU Level of Service E
Analysis Period (min) 15	

Splits and Phases: 25: 99th Ave & Grand Ave

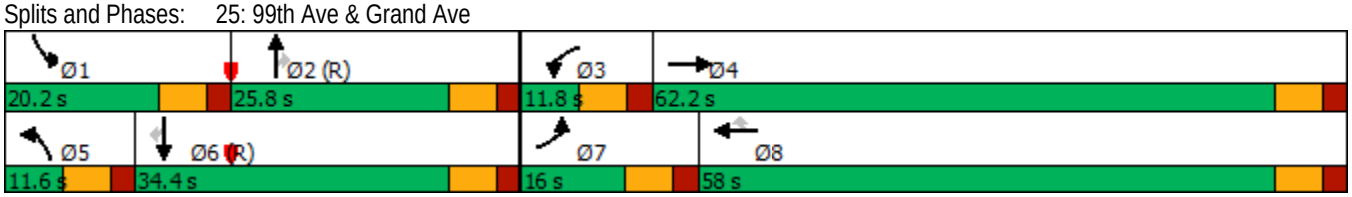

Lane Group	EBT	WBL	WBT
Lane Configurations			
Traffic Volume (vph)	1530	180	3112
Future Volume (vph)	1530	180	3112
Turn Type	NA	Prot	NA
Protected Phases	4	3	8
Permitted Phases			
Detector Phase	4	3	8
Switch Phase			
Minimum Initial (s)	7.0	5.0	7.0
Minimum Split (s)	23.8	10.3	23.8
Total Split (s)	91.0	19.0	110.0
Total Split (%)	82.7%	17.3%	100.0%
Yellow Time (s)	4.3	4.3	4.3
All-Red Time (s)	1.5	1.0	1.5
Lost Time Adjust (s)	0.0	0.0	0.0
Total Lost Time (s)	5.8	5.3	5.8
Lead/Lag	Lag	Lead	
Lead-Lag Optimize?	Yes	Yes	
Recall Mode	None	None	None
Act Effct Green (s)	87.6	11.3	110.0
Actuated g/C Ratio	0.80	0.10	1.00
v/c Ratio	0.60	0.55	0.66
Control Delay	5.0	49.3	4.2
Queue Delay	0.2	0.0	0.0
Total Delay	5.1	49.3	4.2
LOS	A	D	A
Approach Delay	5.1		6.7
Approach LOS	A		A

Intersection Summary	
Cycle Length: 110	
Actuated Cycle Length: 110	
Offset: 100 (91%), Referenced to phase 2: and 6:, Start of Green	
Natural Cycle: 45	
Control Type: Actuated-Coordinated	
Maximum v/c Ratio: 0.66	
Intersection Signal Delay: 6.1	Intersection LOS: A
Intersection Capacity Utilization 116.8%	ICU Level of Service H
Analysis Period (min) 15	

Splits and Phases: 30: SR-101L On Ramp & Grand Ave

Lane Group	EBT	WBT	NBL	NBR
Lane Configurations				
Traffic Volume (vph)	1530	2120	1172	365
Future Volume (vph)	1530	2120	1172	365
Turn Type	NA	NA	Prot	Perm
Protected Phases	4	8	2	
Permitted Phases				2
Detector Phase	4	8	2	2
Switch Phase				
Minimum Initial (s)	7.0	7.0	7.0	7.0
Minimum Split (s)	24.3	23.8	24.6	24.6
Total Split (s)	51.0	51.0	59.0	59.0
Total Split (%)	46.4%	46.4%	53.6%	53.6%
Yellow Time (s)	4.3	4.3	4.3	4.3
All-Red Time (s)	2.0	1.5	2.3	2.3
Lost Time Adjust (s)	0.0	0.0	0.0	0.0
Total Lost Time (s)	6.3	5.8	6.6	6.6
Lead/Lag				
Lead-Lag Optimize?				
Recall Mode	None	None	C-Max	C-Max
Act Effct Green (s)	44.5	45.0	52.6	52.6
Actuated g/C Ratio	0.40	0.41	0.48	0.48
v/c Ratio	0.81	0.74	0.78	0.52
Control Delay	28.0	29.3	28.0	22.9
Queue Delay	1.9	0.0	0.0	0.0
Total Delay	29.9	29.3	28.0	22.9
LOS	C	C	C	C
Approach Delay	29.9	29.3	26.8	
Approach LOS	C	C	C	

Intersection Summary	
Cycle Length: 110	
Actuated Cycle Length: 110	
Offset: 84 (76%), Referenced to phase 2:NBL and 6:, Start of Green	
Natural Cycle: 60	
Control Type: Actuated-Coordinated	
Maximum v/c Ratio: 0.81	
Intersection Signal Delay: 28.7	Intersection LOS: C
Intersection Capacity Utilization 116.8%	ICU Level of Service H
Analysis Period (min) 15	

Splits and Phases: 34: SR-101L Off Ramp & Grand Ave

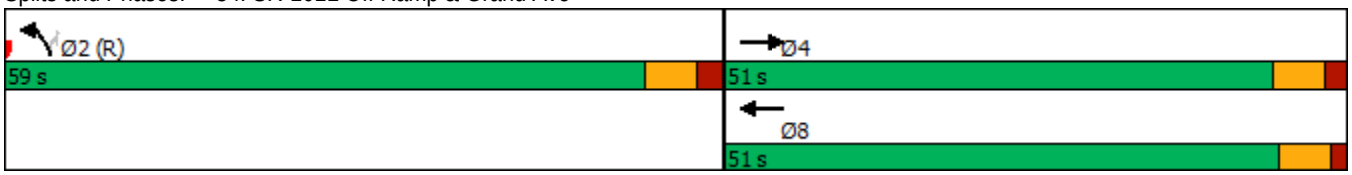

Lane Group	EBL	EBT	WBL	WBT	WBR	NBL	NBT	SBL	SBT	SBR
Lane Configurations										
Traffic Volume (vph)	650	1155	50	1490	370	130	360	210	110	153
Future Volume (vph)	650	1155	50	1490	370	130	360	210	110	153
Turn Type	Prot	NA	Prot	NA	Perm	Prot	NA	Prot	NA	pm+ov
Protected Phases	7	4	3	8		5	2	1	6	7
Permitted Phases					8					6
Detector Phase	7	4	3	8	8	5	2	1	6	7
Switch Phase										
Minimum Initial (s)	7.0	7.0	7.0	7.0	7.0	5.0	7.0	5.0	7.0	7.0
Minimum Split (s)	13.7	24.7	13.3	24.3	24.3	11.9	24.9	11.7	24.7	13.7
Total Split (s)	30.0	56.6	15.4	42.0	42.0	19.9	26.5	21.5	28.1	30.0
Total Split (%)	25.0%	47.2%	12.8%	35.0%	35.0%	16.6%	22.1%	17.9%	23.4%	25.0%
Yellow Time (s)	4.3	4.3	4.3	4.3	4.3	4.3	4.3	4.3	4.3	4.3
All-Red Time (s)	2.4	2.4	2.0	2.0	2.0	2.6	2.6	2.4	2.4	2.4
Lost Time Adjust (s)	0.0	0.0	0.0	0.0	0.0	0.0	0.0	0.0	0.0	0.0
Total Lost Time (s)	6.7	6.7	6.3	6.3	6.3	6.9	6.9	6.7	6.7	6.7
Lead/Lag	Lead	Lag	Lead	Lag	Lag	Lead	Lag	Lead	Lag	Lead
Lead-Lag Optimize?	Yes	Yes	Yes	Yes	Yes	Yes	Yes	Yes	Yes	Yes
Recall Mode	None	None	None	None	None	None	C-Max	None	C-Max	None
Act Effct Green (s)	23.3	53.3	8.4	35.7	35.7	12.3	19.6	14.8	22.1	52.1
Actuated g/C Ratio	0.19	0.44	0.07	0.30	0.30	0.10	0.16	0.12	0.18	0.43
v/c Ratio	1.05	0.60	0.44	1.06	0.59	0.76	0.74	1.04	0.35	0.22
Control Delay	95.4	27.1	64.5	81.8	14.0	78.1	55.4	98.7	25.9	12.1
Queue Delay	0.0	0.0	0.0	0.0	0.0	0.0	0.0	0.0	0.0	0.0
Total Delay	95.4	27.1	64.5	81.8	14.0	78.1	55.4	98.7	25.9	12.1
LOS	F	C	E	F	B	E	E	F	C	B
Approach Delay		50.5		68.2			60.9		53.7	
Approach LOS		D		E			E		D	

Intersection Summary	
Cycle Length: 120	
Actuated Cycle Length: 120	
Offset: 90 (75%), Referenced to phase 2:NBT and 6:SBT, Start of Green	
Natural Cycle: 130	
Control Type: Actuated-Coordinated	
Maximum v/c Ratio: 1.06	
Intersection Signal Delay: 59.0	Intersection LOS: E
Intersection Capacity Utilization 92.4%	ICU Level of Service F
Analysis Period (min) 15	

Splits and Phases: 37: 91st Ave & Grand Ave

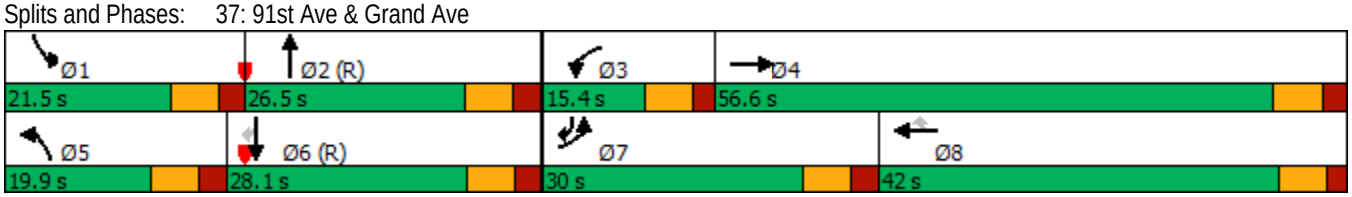

Lane Group	EBL	EBT	WBL	WBT	WBR	NBL	NBT	NBR	SBL	SBT
Lane Configurations										
Traffic Volume (vph)	50	20	550	10	170	40	810	520	32	97
Future Volume (vph)	50	20	550	10	170	40	810	520	32	97
Turn Type	Prot	NA	Prot	NA	Perm	Prot	NA	Perm	Prot	NA
Protected Phases	7	4	3	8		5	2		1	6
Permitted Phases					8			2		
Detector Phase	7	4	3	8	8	5	2	2	1	6
Switch Phase										
Minimum Initial (s)	5.0	7.0	5.0	7.0	7.0	5.0	7.0	7.0	7.0	7.0
Minimum Split (s)	11.3	24.3	11.1	24.1	24.1	11.1	24.1	24.1	12.8	23.8
Total Split (s)	15.3	24.3	38.0	47.0	47.0	13.1	44.9	44.9	12.8	44.6
Total Split (%)	12.8%	20.3%	31.7%	39.2%	39.2%	10.9%	37.4%	37.4%	10.7%	37.2%
Yellow Time (s)	4.3	4.3	4.3	4.3	4.3	4.3	4.3	4.3	4.3	4.3
All-Red Time (s)	2.0	2.0	1.8	1.8	1.8	1.8	1.8	1.8	1.5	1.5
Lost Time Adjust (s)	0.0	0.0	0.0	0.0	0.0	0.0	0.0	0.0	0.0	0.0
Total Lost Time (s)	6.3	6.3	6.1	6.1	6.1	6.1	6.1	6.1	5.8	5.8
Lead/Lag	Lead	Lag	Lead	Lag	Lag	Lead	Lag	Lag	Lead	Lag
Lead-Lag Optimize?	Yes	Yes	Yes	Yes	Yes	Yes	Yes	Yes	Yes	Yes
Recall Mode	None	None	None	None	None	None	C-Max	C-Max	None	C-Max
Act Effct Green (s)	8.0	23.9	26.0	26.0	44.2	6.7	43.9	43.9	7.0	41.4
Actuated g/C Ratio	0.07	0.20	0.22	0.22	0.37	0.06	0.37	0.37	0.06	0.34
v/c Ratio	0.45	0.29	0.83	0.82	0.26	0.43	0.67	0.64	0.34	0.09
Control Delay	65.4	14.7	63.3	62.6	4.9	79.7	14.3	3.7	63.4	27.4
Queue Delay	0.0	0.0	0.0	0.0	0.0	0.0	0.0	0.0	0.0	0.0
Total Delay	65.4	14.7	63.3	62.6	4.9	79.7	14.3	3.7	63.4	27.4
LOS	E	B	E	E	A	E	B	A	E	C
Approach Delay		30.4		49.4			12.2			36.1
Approach LOS		C		D			B			D

Intersection Summary	
Cycle Length: 120	
Actuated Cycle Length: 120	
Offset: 0 (0%), Referenced to phase 2:NBT and 6:SBT, Start of Green	
Natural Cycle: 90	
Control Type: Actuated-Coordinated	
Maximum v/c Ratio: 0.83	
Intersection Signal Delay: 26.1	Intersection LOS: C
Intersection Capacity Utilization 59.8%	ICU Level of Service B
Analysis Period (min) 15	

Splits and Phases: 42: Cactus Rd & 91st Ave

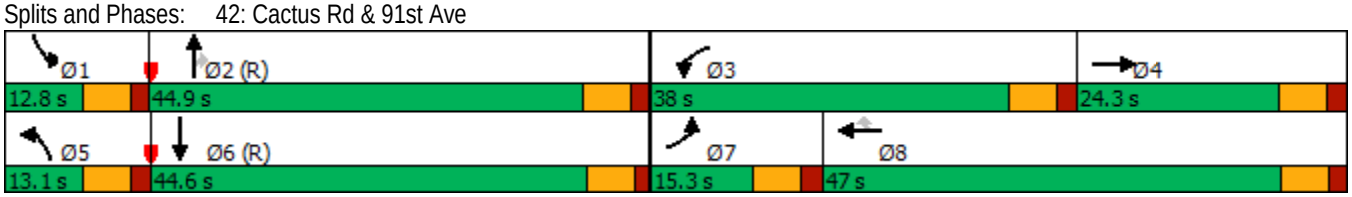

Lane Group	EBT	WBL	WBT	NBL
Lane Configurations				
Traffic Volume (vph)	2460	70	1290	120
Future Volume (vph)	2460	70	1290	120
Turn Type	NA	Prot	NA	Prot
Protected Phases	4	3	8	2
Permitted Phases				
Detector Phase	4	3	8	2
Switch Phase				
Minimum Initial (s)	7.0	7.0	7.0	7.0
Minimum Split (s)	23.8	12.8	23.8	24.6
Total Split (s)	77.0	14.8	91.8	28.2
Total Split (%)	64.2%	12.3%	76.5%	23.5%
Yellow Time (s)	4.3	4.3	4.3	4.3
All-Red Time (s)	1.5	1.5	1.5	2.3
Lost Time Adjust (s)	0.0	0.0	0.0	0.0
Total Lost Time (s)	5.8	5.8	5.8	6.6
Lead/Lag	Lag	Lead		
Lead-Lag Optimize?	Yes	Yes		
Recall Mode	None	None	None	C-Max
Act Effct Green (s)	71.4	8.6	83.2	24.4
Actuated g/C Ratio	0.60	0.07	0.69	0.20
v/c Ratio	0.94	0.61	0.41	0.65
Control Delay	29.7	75.0	8.1	48.5
Queue Delay	0.0	0.0	0.0	0.0
Total Delay	29.7	75.0	8.1	48.5
LOS	C	E	A	D
Approach Delay	29.7		11.5	48.5
Approach LOS	C		B	D

Intersection Summary	
Cycle Length: 120	
Actuated Cycle Length: 120	
Offset: 0 (0%), Referenced to phase 2:NBL and 6:, Start of Green	
Natural Cycle: 90	
Control Type: Actuated-Coordinated	
Maximum v/c Ratio: 0.94	
Intersection Signal Delay: 24.7	Intersection LOS: C
Intersection Capacity Utilization 81.3%	ICU Level of Service D
Analysis Period (min) 15	

Splits and Phases: 7: 113th Ave & Grand Ave

Lane Group	EBL	EBT	WBL	WBT	NBL	NBT	NBR	SBL	SBT	SBR
Lane Configurations										
Traffic Volume (vph)	170	2430	110	1220	100	160	190	50	110	60
Future Volume (vph)	170	2430	110	1220	100	160	190	50	110	60
Turn Type	Prot	NA	Prot	NA	Prot	NA	Perm	Prot	NA	pm+ov
Protected Phases	7	4	3	8	5	2		1	6	7
Permitted Phases							2			6
Detector Phase	7	4	3	8	5	2	2	1	6	7
Switch Phase										
Minimum Initial (s)	7.0	7.0	7.0	7.0	7.0	7.0	7.0	7.0	7.0	7.0
Minimum Split (s)	13.7	24.7	13.3	24.3	24.6	24.6	24.6	24.3	24.3	13.7
Total Split (s)	20.6	86.0	13.6	79.0	24.8	26.0	26.0	24.4	25.6	20.6
Total Split (%)	13.7%	57.3%	9.1%	52.7%	16.5%	17.3%	17.3%	16.3%	17.1%	13.7%
Yellow Time (s)	4.3	4.3	4.3	4.3	4.3	4.3	4.3	4.3	4.3	4.3
All-Red Time (s)	2.4	2.4	2.0	2.0	2.3	2.3	2.3	2.0	2.0	2.4
Lost Time Adjust (s)	0.0	0.0	0.0	0.0	0.0	0.0	0.0	0.0	0.0	0.0
Total Lost Time (s)	6.7	6.7	6.3	6.3	6.6	6.6	6.6	6.3	6.3	6.7
Lead/Lag	Lead	Lag	Lead	Lag	Lead	Lag	Lag	Lead	Lag	Lead
Lead-Lag Optimize?	Yes	Yes	Yes	Yes	Yes	Yes	Yes	Yes	Yes	Yes
Recall Mode	None	None	None	None	Max	C-Max	C-Max	Max	Max	None
Act Effct Green (s)	12.5	79.3	7.3	74.1	18.2	19.4	19.4	18.1	19.3	38.1
Actuated g/C Ratio	0.08	0.53	0.05	0.49	0.12	0.13	0.13	0.12	0.13	0.25
v/c Ratio	0.64	0.99	0.74	0.56	0.26	0.38	0.55	0.25	0.50	0.14
Control Delay	76.9	50.0	96.1	27.8	61.7	62.5	15.3	63.2	68.6	7.8
Queue Delay	0.0	1.5	0.0	0.0	0.0	0.0	0.0	0.0	0.0	0.0
Total Delay	76.9	51.5	96.1	27.8	61.7	62.5	15.3	63.2	68.6	7.8
LOS	E	D	F	C	E	E	B	E	E	A
Approach Delay		53.1		33.3		42.4			50.8	
Approach LOS		D		C		D			D	

Intersection Summary	
Cycle Length: 150	
Actuated Cycle Length: 150	
Offset: 0 (0%), Referenced to phase 2:NBT, Start of Green	
Natural Cycle: 140	
Control Type: Actuated-Coordinated	
Maximum v/c Ratio: 0.99	
Intersection Signal Delay: 46.2	Intersection LOS: D
Intersection Capacity Utilization 86.9%	ICU Level of Service E
Analysis Period (min) 15	

Splits and Phases: 11: 111th Ave & Grand Ave

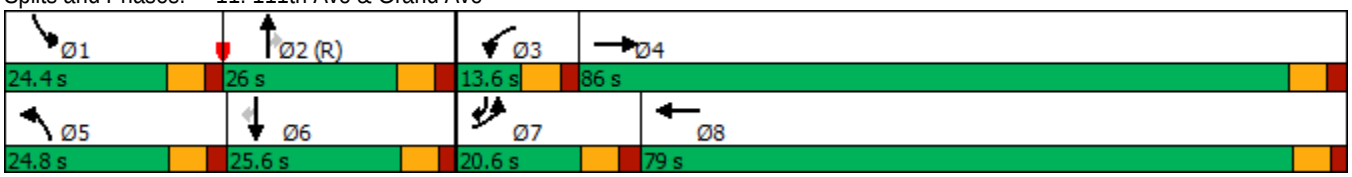

Lane Group	EBL	EBT	WBL	WBT	NBL	NBT	NBR	SBL	SBT
Lane Configurations									
Traffic Volume (vph)	190	2470	70	1290	90	220	90	60	220
Future Volume (vph)	190	2470	70	1290	90	220	90	60	220
Turn Type	Prot	NA	Prot	NA	Prot	NA	Perm	Prot	NA
Protected Phases	7	4	3	8	5	2		1	6
Permitted Phases							2		
Detector Phase	7	4	3	8	5	2	2	1	6
Switch Phase									
Minimum Initial (s)	7.0	7.0	5.0	7.0	5.0	7.0	7.0	5.0	7.0
Minimum Split (s)	14.3	25.3	12.0	25.0	11.7	24.7	24.7	11.5	24.5
Total Split (s)	28.6	67.6	12.0	51.0	14.2	27.4	27.4	13.0	26.2
Total Split (%)	23.8%	56.3%	10.0%	42.5%	11.8%	22.8%	22.8%	10.8%	21.8%
Yellow Time (s)	4.3	4.3	4.3	4.3	4.3	4.3	4.3	4.3	4.3
All-Red Time (s)	3.0	3.0	2.7	2.7	2.4	2.4	2.4	2.2	2.2
Lost Time Adjust (s)	0.0	0.0	0.0	0.0	0.0	0.0	0.0	0.0	0.0
Total Lost Time (s)	7.3	7.3	7.0	7.0	6.7	6.7	6.7	6.5	6.5
Lead/Lag	Lead	Lag	Lead	Lag	Lead	Lag	Lag	Lead	Lag
Lead-Lag Optimize?	Yes	Yes	Yes	Yes	Yes	Yes	Yes	Yes	Yes
Recall Mode	None	None	None	None	None	C-Max	C-Max	None	C-Max
Act Effct Green (s)	18.2	60.3	5.0	47.1	7.5	23.3	23.3	6.5	19.7
Actuated g/C Ratio	0.15	0.50	0.04	0.39	0.06	0.19	0.19	0.05	0.16
v/c Ratio	0.77	1.07	1.06	0.76	0.88	0.34	0.20	0.68	0.55
Control Delay	68.0	68.1	164.3	16.9	114.5	44.6	0.9	88.8	44.6
Queue Delay	0.0	0.0	0.0	0.0	0.0	0.0	0.0	0.0	0.0
Total Delay	68.0	68.1	164.3	16.9	114.5	44.6	0.9	88.8	44.6
LOS	E	E	F	B	F	D	A	F	D
Approach Delay		68.1		24.1		50.5			52.0
Approach LOS		E		C		D			D

Intersection Summary	
Cycle Length: 120	
Actuated Cycle Length: 120	
Offset: 91 (76%), Referenced to phase 2:NBT and 6:SBT, Start of Green	
Natural Cycle: 120	
Control Type: Actuated-Coordinated	
Maximum v/c Ratio: 1.07	
Intersection Signal Delay: 52.6	Intersection LOS: D
Intersection Capacity Utilization 89.1%	ICU Level of Service E
Analysis Period (min) 15	

Splits and Phases: 16: 107th Ave & Grand Ave

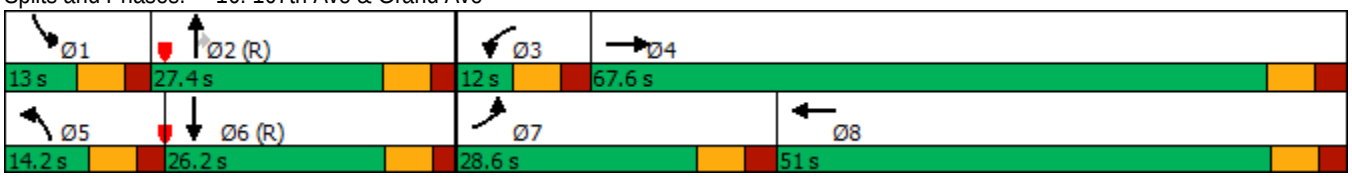

Lane Group	EBL	EBT	WBL	WBT	NBL	NBT	NBR	SBL	SBT
Lane Configurations									
Traffic Volume (vph)	260	2260	40	1310	40	260	40	60	200
Future Volume (vph)	260	2260	40	1310	40	260	40	60	200
Turn Type	Prot	NA	Prot	NA	Prot	NA	Perm	Prot	NA
Protected Phases	7	4	3	8	5	2		1	6
Permitted Phases							2		
Detector Phase	7	4	3	8	5	2	2	1	6
Switch Phase									
Minimum Initial (s)	7.0	7.0	7.0	7.0	5.0	7.0	7.0	5.0	7.0
Minimum Split (s)	13.1	64.1	13.4	24.4	11.5	24.5	24.5	11.5	24.5
Total Split (s)	27.2	66.0	13.4	52.2	12.1	28.6	28.6	12.0	28.5
Total Split (%)	22.7%	55.0%	11.2%	43.5%	10.1%	23.8%	23.8%	10.0%	23.8%
Yellow Time (s)	4.3	4.3	4.3	4.3	4.3	4.3	4.3	4.3	4.3
All-Red Time (s)	1.8	1.8	2.1	2.1	2.2	2.2	2.2	2.2	2.2
Lost Time Adjust (s)	0.0	0.0	0.0	0.0	0.0	0.0	0.0	0.0	0.0
Total Lost Time (s)	6.1	6.1	6.4	6.4	6.5	6.5	6.5	6.5	6.5
Lead/Lag	Lead	Lag	Lead	Lag	Lead	Lag	Lag	Lead	Lag
Lead-Lag Optimize?	Yes	Yes	Yes	Yes	Yes	Yes	Yes	Yes	Yes
Recall Mode	None	None	None	None	None	C-Max	C-Max	None	C-Max
Act Effct Green (s)	20.7	61.7	7.0	45.3	5.6	22.7	22.7	5.8	25.3
Actuated g/C Ratio	0.17	0.51	0.06	0.38	0.05	0.19	0.19	0.05	0.21
v/c Ratio	0.93	0.95	0.43	0.91	0.52	0.80	0.09	0.76	0.44
Control Delay	74.2	6.2	82.3	16.6	78.5	64.9	0.4	103.7	34.7
Queue Delay	0.0	0.0	0.0	0.0	0.0	0.0	0.0	0.0	0.0
Total Delay	74.2	6.2	82.3	16.6	78.5	64.9	0.4	103.7	34.7
LOS	E	A	F	B	E	E	A	F	C
Approach Delay		13.1		18.2		59.0			45.8
Approach LOS		B		B		E			D

Intersection Summary	
Cycle Length: 120	
Actuated Cycle Length: 120	
Offset: 27 (23%), Referenced to phase 2:NBT and 6:SBT, Start of Green	
Natural Cycle: 115	
Control Type: Actuated-Coordinated	
Maximum v/c Ratio: 0.95	
Intersection Signal Delay: 20.5	Intersection LOS: C
Intersection Capacity Utilization 89.3%	ICU Level of Service E
Analysis Period (min) 15	

Splits and Phases: 20: 103rd Ave & Grand Ave

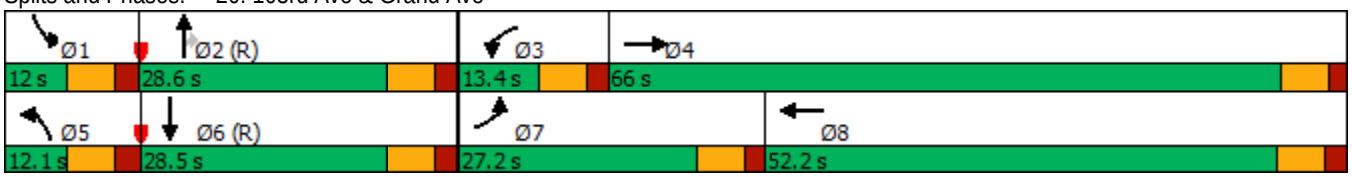

Lane Group	EBL	EBT	WBL	WBT	WBR	NBL	NBT	NBR	SBL	SBT	SBR
Lane Configurations											
Traffic Volume (vph)	430	1950	20	1400	580	70	520	40	280	230	190
Future Volume (vph)	430	1950	20	1400	580	70	520	40	280	230	190
Turn Type	Prot	NA	Prot	NA	Perm	Prot	NA	Perm	Prot	NA	Perm
Protected Phases	7	4	3	8		5	2		1	6	
Permitted Phases					8			2			6
Detector Phase	7	4	3	8	8	5	2	2	1	6	6
Switch Phase											
Minimum Initial (s)	7.0	7.0	7.0	7.0	7.0	5.0	7.0	7.0	5.0	7.0	7.0
Minimum Split (s)	13.6	24.6	13.6	24.6	24.6	11.4	24.4	24.4	11.4	24.4	24.4
Total Split (s)	24.2	59.2	13.6	48.6	48.6	13.0	28.8	28.8	18.4	34.2	34.2
Total Split (%)	20.2%	49.3%	11.3%	40.5%	40.5%	10.8%	24.0%	24.0%	15.3%	28.5%	28.5%
Yellow Time (s)	4.3	4.3	4.3	4.3	4.3	4.3	4.3	4.3	4.3	4.3	4.3
All-Red Time (s)	2.3	2.3	2.3	2.3	2.3	2.1	2.1	2.1	2.1	2.1	2.1
Lost Time Adjust (s)	0.0	0.0	0.0	0.0	0.0	0.0	0.0	0.0	0.0	0.0	0.0
Total Lost Time (s)	6.6	6.6	6.6	6.6	6.6	6.4	6.4	6.4	6.4	6.4	6.4
Lead/Lag	Lead	Lag	Lead	Lag	Lag	Lead	Lag	Lag	Lead	Lag	Lag
Lead-Lag Optimize?	Yes	Yes	Yes	Yes	Yes	Yes	Yes	Yes	Yes	Yes	Yes
Recall Mode	None	None	None	None	None	None	C-Max	C-Max	None	C-Max	C-Max
Act Effct Green (s)	17.6	58.0	7.0	42.0	42.0	6.5	22.4	22.4	12.0	30.4	30.4
Actuated g/C Ratio	0.15	0.48	0.06	0.35	0.35	0.05	0.19	0.19	0.10	0.25	0.25
v/c Ratio	0.94	0.89	0.11	0.88	0.94	0.42	0.87	0.09	0.91	0.29	0.38
Control Delay	82.1	9.8	55.0	43.8	48.2	62.0	61.9	0.4	83.6	38.2	7.0
Queue Delay	0.0	0.0	0.0	0.0	0.0	0.0	0.0	0.0	0.0	0.0	0.0
Total Delay	82.1	9.8	55.0	43.8	48.2	62.0	61.9	0.4	83.6	38.2	7.0
LOS	F	A	D	D	D	E	E	A	F	D	A
Approach Delay		22.6		45.2			58.0			47.9	
Approach LOS		C		D			E			D	

Intersection Summary	
Cycle Length: 120	
Actuated Cycle Length: 120	
Offset: 96 (80%), Referenced to phase 2:NBT and 6:SBT, Start of Green	
Natural Cycle: 110	
Control Type: Actuated-Coordinated	
Maximum v/c Ratio: 0.94	
Intersection Signal Delay: 37.4	Intersection LOS: D
Intersection Capacity Utilization 88.4%	ICU Level of Service E
Analysis Period (min) 15	

Splits and Phases: 25: 99th Ave & Grand Ave

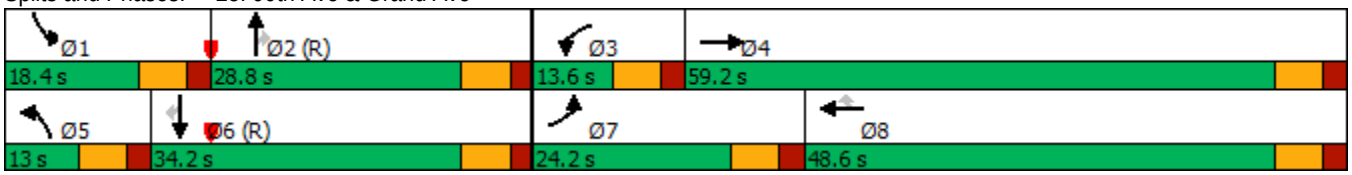

Lane Group	EBT	WBL	WBT
Lane Configurations			
Traffic Volume (vph)	1850	60	2020
Future Volume (vph)	1850	60	2020
Turn Type	NA	Prot	NA
Protected Phases	4	3	8
Permitted Phases			
Detector Phase	4	3	8
Switch Phase			
Minimum Initial (s)	7.0	7.0	7.0
Minimum Split (s)	23.8	12.8	23.8
Total Split (s)	94.0	16.0	110.0
Total Split (%)	85.5%	14.5%	100.0%
Yellow Time (s)	4.3	4.3	4.3
All-Red Time (s)	1.5	1.5	1.5
Lost Time Adjust (s)	0.0	0.0	0.0
Total Lost Time (s)	5.8	5.8	5.8
Lead/Lag	Lag	Lead	
Lead-Lag Optimize?	Yes	Yes	
Recall Mode	None	None	None
Act Effct Green (s)	94.3	7.8	110.0
Actuated g/C Ratio	0.86	0.07	1.00
v/c Ratio	0.58	0.27	0.44
Control Delay	3.4	50.9	0.3
Queue Delay	0.0	0.0	0.0
Total Delay	3.4	50.9	0.3
LOS	A	D	A
Approach Delay	3.4		1.7
Approach LOS	A		A

Intersection Summary	
Cycle Length: 110	
Actuated Cycle Length: 110	
Offset: 0 (0%), Referenced to phase 2: and 6:, Start of Green	
Natural Cycle: 50	
Control Type: Actuated-Coordinated	
Maximum v/c Ratio: 0.58	
Intersection Signal Delay: 2.6	Intersection LOS: A
Intersection Capacity Utilization 49.9%	ICU Level of Service A
Analysis Period (min) 15	

Splits and Phases: 30: SR-101L On Ramp & Grand Ave

Lane Group	Ø2	Ø4	Ø8
Lane Configurations			
Traffic Volume (vph)			
Future Volume (vph)			
Turn Type			
Protected Phases	2	4	8
Permitted Phases			
Detector Phase			
Switch Phase			
Minimum Initial (s)	5.0	5.0	5.0
Minimum Split (s)	22.5	22.5	22.5
Total Split (s)	22.5	22.5	22.5
Total Split (%)	50%	50%	50%
Yellow Time (s)	3.5	3.5	3.5
All-Red Time (s)	1.0	1.0	1.0
Lost Time Adjust (s)			
Total Lost Time (s)			
Lead/Lag			
Lead-Lag Optimize?			
Recall Mode	Max	Max	Max
Act Effct Green (s)			
Actuated g/C Ratio			
v/c Ratio			
Control Delay			
Queue Delay			
Total Delay			
LOS			
Approach Delay			
Approach LOS			

Intersection Summary	
Cycle Length: 45	
Actuated Cycle Length: 45	
Offset: 0 (0%), Referenced to phase 2:NBL and 6:, Start of Green	
Natural Cycle: 45	
Control Type: Pretimed	
Maximum v/c Ratio: 0.00	
Intersection Signal Delay: 0.0	Intersection LOS: A
Intersection Capacity Utilization 0.0%	ICU Level of Service A
Analysis Period (min) 15	

Splits and Phases: 34: SR-101L Off Ramp & Grand Ave

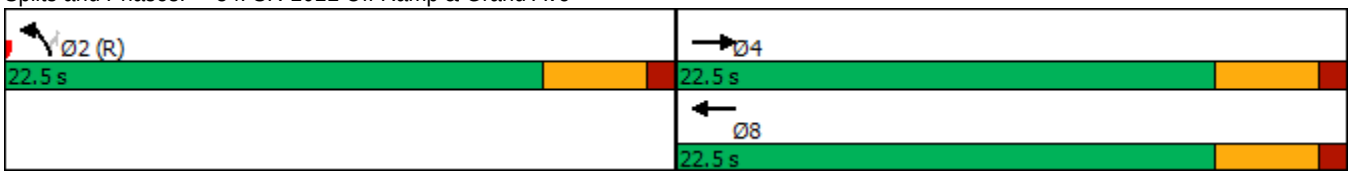

Lane Group	EBR	WBU	WBR
Lane Configurations			
Traffic Volume (vph)	1950	240	1430
Future Volume (vph)	1950	240	1430
Turn Type	Prot	Prot	Free
Protected Phases	8	1	
Permitted Phases			Free
Detector Phase	8	1	
Switch Phase			
Minimum Initial (s)	5.0	5.0	
Minimum Split (s)	9.5	9.5	
Total Split (s)	36.0	24.0	
Total Split (%)	60.0%	40.0%	
Yellow Time (s)	3.5	3.5	
All-Red Time (s)	1.0	1.0	
Lost Time Adjust (s)	0.0	0.0	
Total Lost Time (s)	4.5	4.5	
Lead/Lag			
Lead-Lag Optimize?			
Recall Mode	None	None	
Act Effct Green (s)	13.5	38.4	60.0
Actuated g/C Ratio	0.22	0.64	1.00
v/c Ratio	0.77	0.23	0.43
Control Delay	2.3	8.8	0.4
Queue Delay	0.0	0.0	0.0
Total Delay	2.3	8.8	0.4
LOS	A	A	A
Approach Delay			
Approach LOS			

Intersection Summary	
Cycle Length: 60	
Actuated Cycle Length: 60	
Offset: 0 (0%), Referenced to phase 2: and 6:, Start of Green	
Natural Cycle: 40	
Control Type: Actuated-Coordinated	
Maximum v/c Ratio: 0.77	
Intersection Signal Delay: 2.0	Intersection LOS: A
Intersection Capacity Utilization 49.2%	ICU Level of Service A
Analysis Period (min) 15	

Splits and Phases: 15: Westbound Loon

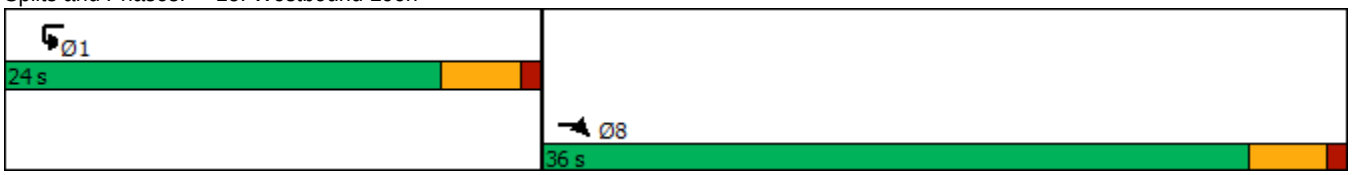

Lane Group	EBT	EBR	WBT	WBR	NBT	NBR	SBT	SBR
Lane Configurations								
Traffic Volume (vph)	2080	110	840	860	410	220	150	830
Future Volume (vph)	2080	110	840	860	410	220	150	830
Turn Type	NA	Perm	NA	Perm	NA	Perm	NA	Perm
Protected Phases	4		8		2		6	
Permitted Phases		4		8		2		6
Detector Phase	4	4	8	8	2	2	6	6
Switch Phase								
Minimum Initial (s)	5.0	5.0	5.0	5.0	7.0	7.0	7.0	7.0
Minimum Split (s)	22.5	22.5	22.5	22.5	24.9	24.9	26.5	26.5
Total Split (s)	65.0	65.0	65.0	65.0	55.0	55.0	55.0	55.0
Total Split (%)	54.2%	54.2%	54.2%	54.2%	45.8%	45.8%	45.8%	45.8%
Yellow Time (s)	3.5	3.5	3.5	3.5	4.3	4.3	4.3	4.3
All-Red Time (s)	1.0	1.0	1.0	1.0	2.6	2.6	2.4	2.4
Lost Time Adjust (s)	0.0	0.0	0.0	0.0	0.0	0.0	0.0	0.0
Total Lost Time (s)	4.5	4.5	4.5	4.5	6.9	6.9	6.7	6.7
Lead/Lag								
Lead-Lag Optimize?								
Recall Mode	None	None	None	None	C-Max	C-Max	C-Max	C-Max
Act Effct Green (s)	60.5	60.5	60.5	60.5	48.1	48.1	48.3	48.3
Actuated g/C Ratio	0.50	0.50	0.50	0.50	0.40	0.40	0.40	0.40
v/c Ratio	0.88	0.14	0.36	0.67	0.32	0.37	0.22	0.80
Control Delay	30.7	4.9	22.1	29.9	25.5	25.8	18.1	24.7
Queue Delay	0.1	0.0	0.0	0.0	0.0	0.0	0.0	0.0
Total Delay	30.8	4.9	22.1	29.9	25.5	25.8	18.1	24.7
LOS	C	A	C	C	C	C	B	C
Approach Delay	29.5		26.0		25.6		23.7	
Approach LOS	C		C		C		C	

Intersection Summary	
Cycle Length: 120	
Actuated Cycle Length: 120	
Offset: 0 (0%), Referenced to phase 2:NBT and 6:SBT, Start of Green	
Natural Cycle: 70	
Control Type: Actuated-Coordinated	
Maximum v/c Ratio: 0.88	
Intersection Signal Delay: 27.0	Intersection LOS: C
Intersection Capacity Utilization 68.5%	ICU Level of Service C
Analysis Period (min) 15	

Splits and Phases: 37: 91st Ave & Grand Ave

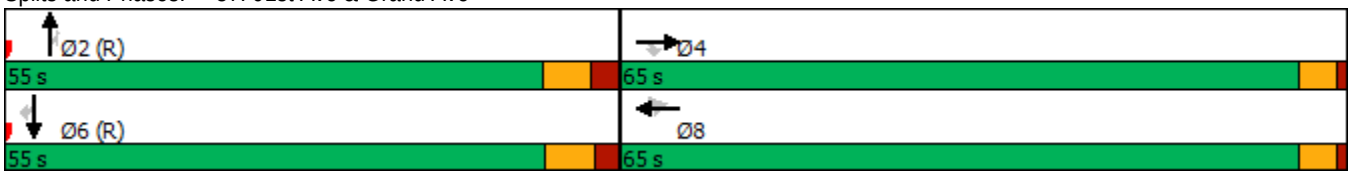

Lane Group	EBL	EBT	WBL	WBT	WBR	NBL	NBT	NBR	SBL	SBT
Lane Configurations										
Traffic Volume (vph)	80	20	150	10	100	110	1060	100	60	680
Future Volume (vph)	80	20	150	10	100	110	1060	100	60	680
Turn Type	Prot	NA	Prot	NA	Perm	Prot	NA	Perm	Prot	NA
Protected Phases	7	4	3	8		5	2		1	6
Permitted Phases					8			2		
Detector Phase	7	4	3	8	8	5	2	2	1	6
Switch Phase										
Minimum Initial (s)	5.0	7.0	5.0	7.0	7.0	5.0	7.0	7.0	7.0	7.0
Minimum Split (s)	11.3	24.3	11.1	24.1	24.1	11.1	24.1	24.1	12.8	23.8
Total Split (s)	19.0	24.3	19.3	24.6	24.6	22.0	60.4	60.4	16.0	54.4
Total Split (%)	15.8%	20.3%	16.1%	20.5%	20.5%	18.3%	50.3%	50.3%	13.3%	45.3%
Yellow Time (s)	4.3	4.3	4.3	4.3	4.3	4.3	4.3	4.3	4.3	4.3
All-Red Time (s)	2.0	2.0	1.8	1.8	1.8	1.8	1.8	1.8	1.5	1.5
Lost Time Adjust (s)	0.0	0.0	0.0	0.0	0.0	0.0	0.0	0.0	0.0	0.0
Total Lost Time (s)	6.3	6.3	6.1	6.1	6.1	6.1	6.1	6.1	5.8	5.8
Lead/Lag	Lead	Lag	Lead	Lag	Lag	Lead	Lag	Lag	Lead	Lag
Lead-Lag Optimize?	Yes	Yes	Yes	Yes	Yes	Yes	Yes	Yes	Yes	Yes
Recall Mode	None	None	None	None	None	None	C-Max	C-Max	None	C-Max
Act Effct Green (s)	10.6	22.9	10.9	9.5	20.6	12.9	58.0	58.0	9.1	51.6
Actuated g/C Ratio	0.09	0.19	0.09	0.08	0.17	0.11	0.48	0.48	0.08	0.43
v/c Ratio	0.56	0.42	0.58	0.67	0.29	0.64	0.68	0.13	0.49	0.56
Control Delay	66.2	13.0	67.2	75.8	5.5	72.3	21.0	0.8	65.7	27.5
Queue Delay	0.0	0.0	0.0	0.0	0.0	0.0	0.0	0.0	0.0	0.0
Total Delay	66.2	13.0	67.2	75.8	5.5	72.3	21.0	0.8	65.7	27.5
LOS	E	B	E	E	A	E	C	A	E	C
Approach Delay		30.0		46.1			23.9			30.3
Approach LOS		C		D			C			C

Intersection Summary	
Cycle Length: 120	
Actuated Cycle Length: 120	
Offset: 117 (98%), Referenced to phase 2:NBT and 6:SBT, Start of Green	
Natural Cycle: 90	
Control Type: Actuated-Coordinated	
Maximum v/c Ratio: 0.68	
Intersection Signal Delay: 28.7	Intersection LOS: C
Intersection Capacity Utilization 71.5%	ICU Level of Service C
Analysis Period (min) 15	

Splits and Phases: 42: Cactus Rd & 91st Ave

Lane Group	EBU	EBR	WBT
Lane Configurations			
Traffic Volume (vph)	790	1510	910
Future Volume (vph)	790	1510	910
Turn Type	Prot	Prot	NA
Protected Phases	7	7	8
Permitted Phases			
Detector Phase	7	7	8
Switch Phase			
Minimum Initial (s)	5.0	5.0	5.0
Minimum Split (s)	9.5	9.5	22.5
Total Split (s)	68.0	68.0	52.0
Total Split (%)	56.7%	56.7%	43.3%
Yellow Time (s)	3.5	3.5	3.5
All-Red Time (s)	1.0	1.0	1.0
Lost Time Adjust (s)	0.0	0.0	0.0
Total Lost Time (s)	4.5	4.5	4.5
Lead/Lag	Lead	Lead	Lag
Lead-Lag Optimize?	Yes	Yes	Yes
Recall Mode	None	None	None
Act Effct Green (s)	47.5	47.5	63.5
Actuated g/C Ratio	0.40	0.40	0.53
v/c Ratio	0.63	0.56	0.37
Control Delay	13.3	2.3	18.2
Queue Delay	0.0	0.0	0.0
Total Delay	13.3	2.3	18.2
LOS	B	A	B
Approach Delay			18.2
Approach LOS			B

Intersection Summary	
Cycle Length: 120	
Actuated Cycle Length: 120	
Offset: 0 (0%), Referenced to phase 2: and 6:, Start of Green	
Natural Cycle: 40	
Control Type: Actuated-Coordinated	
Maximum v/c Ratio: 0.63	
Intersection Signal Delay: 9.5	Intersection LOS: A
Intersection Capacity Utilization 47.2%	ICU Level of Service A
Analysis Period (min) 15	

Splits and Phases: 35: Eastbound Loon

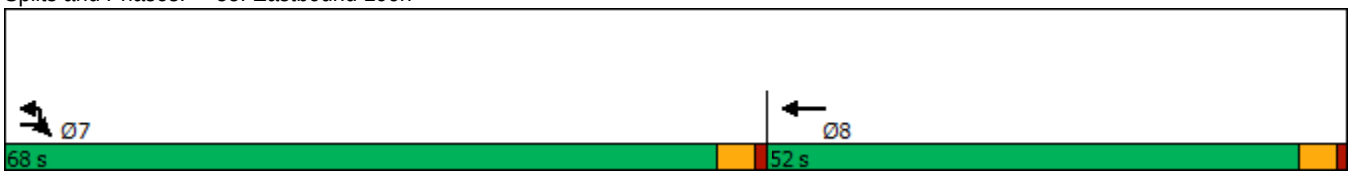

Lane Group	EBT	WBL	WBT	NBL
Lane Configurations				
Traffic Volume (vph)	2460	70	1290	120
Future Volume (vph)	2460	70	1290	120
Turn Type	NA	Prot	NA	Prot
Protected Phases	4	3	8	2
Permitted Phases				
Detector Phase	4	3	8	2
Switch Phase				
Minimum Initial (s)	7.0	7.0	7.0	7.0
Minimum Split (s)	23.8	12.8	23.8	24.6
Total Split (s)	77.0	14.8	91.8	28.2
Total Split (%)	64.2%	12.3%	76.5%	23.5%
Yellow Time (s)	4.3	4.3	4.3	4.3
All-Red Time (s)	1.5	1.5	1.5	2.3
Lost Time Adjust (s)	0.0	0.0	0.0	0.0
Total Lost Time (s)	5.8	5.8	5.8	6.6
Lead/Lag	Lag	Lead		
Lead-Lag Optimize?	Yes	Yes		
Recall Mode	None	None	None	C-Max
Act Effct Green (s)	71.4	8.6	83.2	24.4
Actuated g/C Ratio	0.60	0.07	0.69	0.20
v/c Ratio	0.94	0.61	0.41	0.65
Control Delay	29.7	75.0	8.1	48.5
Queue Delay	0.0	0.0	0.0	0.0
Total Delay	29.7	75.0	8.1	48.5
LOS	C	E	A	D
Approach Delay	29.7		11.5	48.5
Approach LOS	C		B	D

Intersection Summary	
Cycle Length: 120	
Actuated Cycle Length: 120	
Offset: 0 (0%), Referenced to phase 2:NBL and 6:, Start of Green	
Natural Cycle: 90	
Control Type: Actuated-Coordinated	
Maximum v/c Ratio: 0.94	
Intersection Signal Delay: 24.7	Intersection LOS: C
Intersection Capacity Utilization 81.3%	ICU Level of Service D
Analysis Period (min) 15	

Splits and Phases: 7: 113th Ave & Grand Ave

Lane Group	EBL	EBT	WBL	WBT	NBL	NBT	NBR	SBL	SBT	SBR
Lane Configurations										
Traffic Volume (vph)	170	2430	110	1220	100	160	190	50	110	60
Future Volume (vph)	170	2430	110	1220	100	160	190	50	110	60
Turn Type	Prot	NA	Prot	NA	Prot	NA	Perm	Prot	NA	pm+ov
Protected Phases	7	4	3	8	5	2		1	6	7
Permitted Phases							2			6
Detector Phase	7	4	3	8	5	2	2	1	6	7
Switch Phase										
Minimum Initial (s)	7.0	7.0	7.0	7.0	7.0	7.0	7.0	7.0	7.0	7.0
Minimum Split (s)	13.7	24.7	13.3	24.3	24.6	24.6	24.6	24.3	24.3	13.7
Total Split (s)	20.6	86.0	13.6	79.0	24.8	26.0	26.0	24.4	25.6	20.6
Total Split (%)	13.7%	57.3%	9.1%	52.7%	16.5%	17.3%	17.3%	16.3%	17.1%	13.7%
Yellow Time (s)	4.3	4.3	4.3	4.3	4.3	4.3	4.3	4.3	4.3	4.3
All-Red Time (s)	2.4	2.4	2.0	2.0	2.3	2.3	2.3	2.0	2.0	2.4
Lost Time Adjust (s)	0.0	0.0	0.0	0.0	0.0	0.0	0.0	0.0	0.0	0.0
Total Lost Time (s)	6.7	6.7	6.3	6.3	6.6	6.6	6.6	6.3	6.3	6.7
Lead/Lag	Lead	Lag	Lead	Lag	Lead	Lag	Lag	Lead	Lag	Lead
Lead-Lag Optimize?	Yes	Yes	Yes	Yes	Yes	Yes	Yes	Yes	Yes	Yes
Recall Mode	None	None	None	None	Max	C-Max	C-Max	Max	Max	None
Act Effct Green (s)	12.5	79.3	7.3	74.1	18.2	19.4	19.4	18.1	19.3	38.1
Actuated g/C Ratio	0.08	0.53	0.05	0.49	0.12	0.13	0.13	0.12	0.13	0.25
v/c Ratio	0.64	0.99	0.74	0.56	0.26	0.38	0.55	0.25	0.50	0.14
Control Delay	76.9	50.0	96.1	27.8	61.7	62.5	15.3	63.2	68.6	7.8
Queue Delay	0.0	1.5	0.0	0.0	0.0	0.0	0.0	0.0	0.0	0.0
Total Delay	76.9	51.5	96.1	27.8	61.7	62.5	15.3	63.2	68.6	7.8
LOS	E	D	F	C	E	E	B	E	E	A
Approach Delay		53.1		33.3		42.4			50.8	
Approach LOS		D		C		D			D	

Intersection Summary	
Cycle Length: 150	
Actuated Cycle Length: 150	
Offset: 0 (0%), Referenced to phase 2:NBT, Start of Green	
Natural Cycle: 140	
Control Type: Actuated-Coordinated	
Maximum v/c Ratio: 0.99	
Intersection Signal Delay: 46.2	Intersection LOS: D
Intersection Capacity Utilization 86.9%	ICU Level of Service E
Analysis Period (min) 15	

Splits and Phases: 11: 111th Ave & Grand Ave

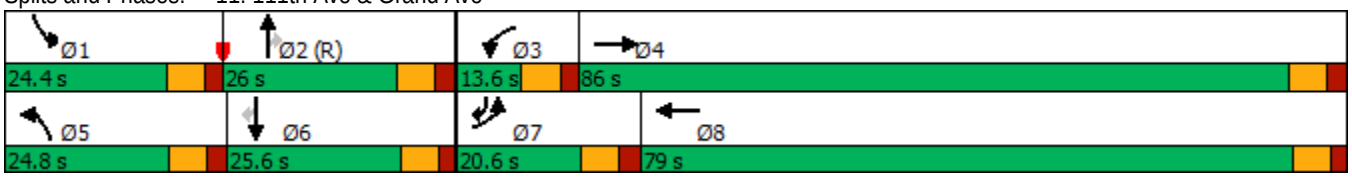

Lane Group	EBL	EBT	WBL	WBT	NBL	NBT	NBR	SBL	SBT
Lane Configurations									
Traffic Volume (vph)	190	2470	70	1290	90	220	90	60	220
Future Volume (vph)	190	2470	70	1290	90	220	90	60	220
Turn Type	Prot	NA	Prot	NA	Prot	NA	Perm	Prot	NA
Protected Phases	7	4	3	8	5	2		1	6
Permitted Phases							2		
Detector Phase	7	4	3	8	5	2	2	1	6
Switch Phase									
Minimum Initial (s)	7.0	7.0	5.0	7.0	5.0	7.0	7.0	5.0	7.0
Minimum Split (s)	14.3	25.3	12.0	25.0	11.7	24.7	24.7	11.5	24.5
Total Split (s)	28.6	67.6	12.0	51.0	14.2	27.4	27.4	13.0	26.2
Total Split (%)	23.8%	56.3%	10.0%	42.5%	11.8%	22.8%	22.8%	10.8%	21.8%
Yellow Time (s)	4.3	4.3	4.3	4.3	4.3	4.3	4.3	4.3	4.3
All-Red Time (s)	3.0	3.0	2.7	2.7	2.4	2.4	2.4	2.2	2.2
Lost Time Adjust (s)	0.0	0.0	0.0	0.0	0.0	0.0	0.0	0.0	0.0
Total Lost Time (s)	7.3	7.3	7.0	7.0	6.7	6.7	6.7	6.5	6.5
Lead/Lag	Lead	Lag	Lead	Lag	Lead	Lag	Lag	Lead	Lag
Lead-Lag Optimize?	Yes	Yes	Yes	Yes	Yes	Yes	Yes	Yes	Yes
Recall Mode	None	None	None	None	None	C-Max	C-Max	None	C-Max
Act Effct Green (s)	18.2	60.3	5.0	47.1	7.5	23.3	23.3	6.5	19.7
Actuated g/C Ratio	0.15	0.50	0.04	0.39	0.06	0.19	0.19	0.05	0.16
v/c Ratio	0.77	1.07	1.06	0.76	0.88	0.34	0.20	0.68	0.55
Control Delay	68.0	68.1	164.3	16.9	114.5	44.6	0.9	88.8	44.6
Queue Delay	0.0	0.0	0.0	0.0	0.0	0.0	0.0	0.0	0.0
Total Delay	68.0	68.1	164.3	16.9	114.5	44.6	0.9	88.8	44.6
LOS	E	E	F	B	F	D	A	F	D
Approach Delay		68.1		24.1		50.5			52.0
Approach LOS		E		C		D			D

Intersection Summary	
Cycle Length: 120	
Actuated Cycle Length: 120	
Offset: 83 (69%), Referenced to phase 2:NBT and 6:SBT, Start of Green	
Natural Cycle: 120	
Control Type: Actuated-Coordinated	
Maximum v/c Ratio: 1.07	
Intersection Signal Delay: 52.6	Intersection LOS: D
Intersection Capacity Utilization 89.1%	ICU Level of Service E
Analysis Period (min) 15	

Splits and Phases: 16: 107th Ave & Grand Ave

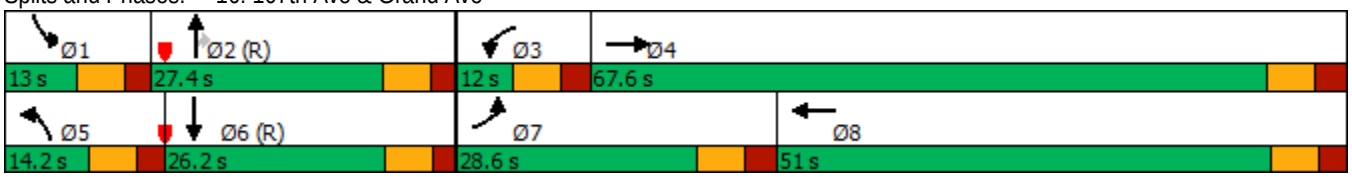

Lane Group	EBL	EBT	WBL	WBT	NBL	NBT	NBR	SBL	SBT
Lane Configurations									
Traffic Volume (vph)	260	2260	40	1310	40	260	40	60	200
Future Volume (vph)	260	2260	40	1310	40	260	40	60	200
Turn Type	Prot	NA	Prot	NA	Prot	NA	Perm	Prot	NA
Protected Phases	7	4	3	8	5	2		1	6
Permitted Phases							2		
Detector Phase	7	4	3	8	5	2	2	1	6
Switch Phase									
Minimum Initial (s)	7.0	7.0	7.0	7.0	5.0	7.0	7.0	5.0	7.0
Minimum Split (s)	13.1	64.1	13.4	24.4	11.5	24.5	24.5	11.5	24.5
Total Split (s)	27.2	66.0	13.4	52.2	12.1	28.6	28.6	12.0	28.5
Total Split (%)	22.7%	55.0%	11.2%	43.5%	10.1%	23.8%	23.8%	10.0%	23.8%
Yellow Time (s)	4.3	4.3	4.3	4.3	4.3	4.3	4.3	4.3	4.3
All-Red Time (s)	1.8	1.8	2.1	2.1	2.2	2.2	2.2	2.2	2.2
Lost Time Adjust (s)	0.0	0.0	0.0	0.0	0.0	0.0	0.0	0.0	0.0
Total Lost Time (s)	6.1	6.1	6.4	6.4	6.5	6.5	6.5	6.5	6.5
Lead/Lag	Lead	Lag	Lead	Lag	Lead	Lag	Lag	Lead	Lag
Lead-Lag Optimize?	Yes	Yes	Yes	Yes	Yes	Yes	Yes	Yes	Yes
Recall Mode	None	None	None	None	None	C-Max	C-Max	None	C-Max
Act Effct Green (s)	20.7	61.7	7.0	45.3	5.6	22.7	22.7	5.8	25.3
Actuated g/C Ratio	0.17	0.51	0.06	0.38	0.05	0.19	0.19	0.05	0.21
v/c Ratio	0.93	0.95	0.43	0.91	0.52	0.80	0.09	0.76	0.44
Control Delay	74.2	6.2	82.3	16.6	78.5	64.9	0.4	103.7	34.7
Queue Delay	0.0	0.0	0.0	0.0	0.0	0.0	0.0	0.0	0.0
Total Delay	74.2	6.2	82.3	16.6	78.5	64.9	0.4	103.7	34.7
LOS	E	A	F	B	E	E	A	F	C
Approach Delay		13.1		18.2		59.0			45.8
Approach LOS		B		B		E			D

Intersection Summary	
Cycle Length: 120	
Actuated Cycle Length: 120	
Offset: 19 (16%), Referenced to phase 2:NBT and 6:SBT, Start of Green	
Natural Cycle: 115	
Control Type: Actuated-Coordinated	
Maximum v/c Ratio: 0.95	
Intersection Signal Delay: 20.5	Intersection LOS: C
Intersection Capacity Utilization 89.3%	ICU Level of Service E
Analysis Period (min) 15	

Splits and Phases: 20: 103rd Ave & Grand Ave

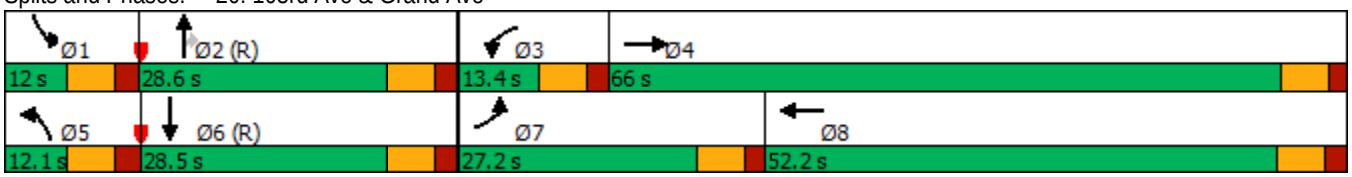

Lane Group	EBL	EBT	WBL	WBT	WBR	NBL	NBT	NBR	SBL	SBT	SBR
Lane Configurations											
Traffic Volume (vph)	430	1950	20	1400	580	70	520	40	280	230	190
Future Volume (vph)	430	1950	20	1400	580	70	520	40	280	230	190
Turn Type	Prot	NA	Prot	NA	Perm	Prot	NA	Perm	Prot	NA	Perm
Protected Phases	7	4	3	8		5	2		1	6	
Permitted Phases					8			2			6
Detector Phase	7	4	3	8	8	5	2	2	1	6	6
Switch Phase											
Minimum Initial (s)	7.0	7.0	7.0	7.0	7.0	5.0	7.0	7.0	5.0	7.0	7.0
Minimum Split (s)	13.6	24.6	13.6	24.6	24.6	11.4	24.4	24.4	11.4	24.4	24.4
Total Split (s)	24.2	59.2	13.6	48.6	48.6	13.0	28.8	28.8	18.4	34.2	34.2
Total Split (%)	20.2%	49.3%	11.3%	40.5%	40.5%	10.8%	24.0%	24.0%	15.3%	28.5%	28.5%
Yellow Time (s)	4.3	4.3	4.3	4.3	4.3	4.3	4.3	4.3	4.3	4.3	4.3
All-Red Time (s)	2.3	2.3	2.3	2.3	2.3	2.1	2.1	2.1	2.1	2.1	2.1
Lost Time Adjust (s)	0.0	0.0	0.0	0.0	0.0	0.0	0.0	0.0	0.0	0.0	0.0
Total Lost Time (s)	6.6	6.6	6.6	6.6	6.6	6.4	6.4	6.4	6.4	6.4	6.4
Lead/Lag	Lead	Lag	Lead	Lag	Lag	Lead	Lag	Lag	Lead	Lag	Lag
Lead-Lag Optimize?	Yes	Yes	Yes	Yes	Yes	Yes	Yes	Yes	Yes	Yes	Yes
Recall Mode	None	None	None	None	None	None	C-Max	C-Max	None	C-Max	C-Max
Act Effct Green (s)	17.6	58.0	7.0	42.0	42.0	6.5	22.4	22.4	12.0	30.4	30.4
Actuated g/C Ratio	0.15	0.48	0.06	0.35	0.35	0.05	0.19	0.19	0.10	0.25	0.25
v/c Ratio	0.94	0.89	0.11	0.88	0.94	0.42	0.87	0.09	0.91	0.29	0.38
Control Delay	82.1	9.8	55.0	43.8	48.2	62.0	61.9	0.4	83.6	38.2	7.0
Queue Delay	0.0	0.0	0.0	0.0	0.0	0.0	0.0	0.0	0.0	0.0	0.0
Total Delay	82.1	9.8	55.0	43.8	48.2	62.0	61.9	0.4	83.6	38.2	7.0
LOS	F	A	D	D	D	E	E	A	F	D	A
Approach Delay		22.6		45.2			58.0			47.9	
Approach LOS		C		D			E			D	

Intersection Summary	
Cycle Length: 120	
Actuated Cycle Length: 120	
Offset: 88 (73%), Referenced to phase 2:NBT and 6:SBT, Start of Green	
Natural Cycle: 110	
Control Type: Actuated-Coordinated	
Maximum v/c Ratio: 0.94	
Intersection Signal Delay: 37.4	Intersection LOS: D
Intersection Capacity Utilization 88.4%	ICU Level of Service E
Analysis Period (min) 15	

Splits and Phases: 25: 99th Ave & Grand Ave

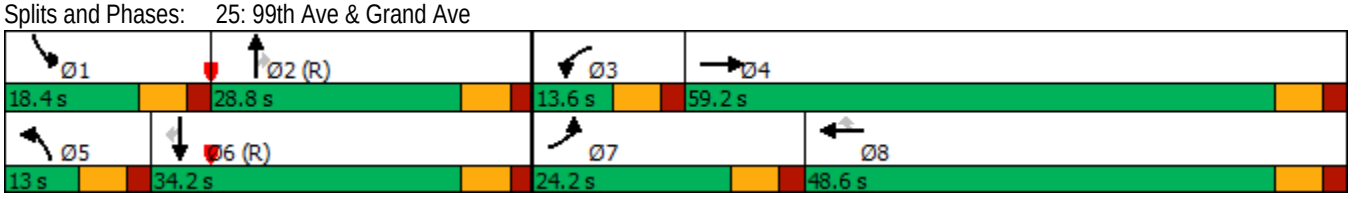

Lane Group	EBT	WBL	WBT
Lane Configurations			
Traffic Volume (vph)	1850	60	2020
Future Volume (vph)	1850	60	2020
Turn Type	NA	Prot	NA
Protected Phases	4	3	8
Permitted Phases			
Detector Phase	4	3	8
Switch Phase			
Minimum Initial (s)	7.0	7.0	7.0
Minimum Split (s)	23.8	12.8	23.8
Total Split (s)	94.0	16.0	110.0
Total Split (%)	85.5%	14.5%	100.0%
Yellow Time (s)	4.3	4.3	4.3
All-Red Time (s)	1.5	1.5	1.5
Lost Time Adjust (s)	0.0	0.0	0.0
Total Lost Time (s)	5.8	5.8	5.8
Lead/Lag	Lag	Lead	
Lead-Lag Optimize?	Yes	Yes	
Recall Mode	None	None	None
Act Effct Green (s)	94.3	7.8	110.0
Actuated g/C Ratio	0.86	0.07	1.00
v/c Ratio	0.58	0.27	0.44
Control Delay	3.4	50.9	0.3
Queue Delay	0.0	0.0	0.0
Total Delay	3.4	50.9	0.3
LOS	A	D	A
Approach Delay	3.4		1.7
Approach LOS	A		A

Intersection Summary	
Cycle Length: 110	
Actuated Cycle Length: 110	
Offset: 0 (0%), Referenced to phase 2: and 6:, Start of Green	
Natural Cycle: 50	
Control Type: Actuated-Coordinated	
Maximum v/c Ratio: 0.58	
Intersection Signal Delay: 2.6	Intersection LOS: A
Intersection Capacity Utilization 49.9%	ICU Level of Service A
Analysis Period (min) 15	

Splits and Phases: 30: SR-101L On Ramp & Grand Ave

Lane Group	Ø2	Ø4	Ø8
Lane Configurations			
Traffic Volume (vph)			
Future Volume (vph)			
Turn Type			
Protected Phases	2	4	8
Permitted Phases			
Detector Phase			
Switch Phase			
Minimum Initial (s)	5.0	5.0	5.0
Minimum Split (s)	22.5	22.5	22.5
Total Split (s)	22.5	22.5	22.5
Total Split (%)	50%	50%	50%
Yellow Time (s)	3.5	3.5	3.5
All-Red Time (s)	1.0	1.0	1.0
Lost Time Adjust (s)			
Total Lost Time (s)			
Lead/Lag			
Lead-Lag Optimize?			
Recall Mode	Max	Max	Max
Act Effct Green (s)			
Actuated g/C Ratio			
v/c Ratio			
Control Delay			
Queue Delay			
Total Delay			
LOS			
Approach Delay			
Approach LOS			

Intersection Summary	
Cycle Length: 45	
Actuated Cycle Length: 45	
Offset: 0 (0%), Referenced to phase 2:NBL and 6:, Start of Green	
Natural Cycle: 45	
Control Type: Pretimed	
Maximum v/c Ratio: 0.00	
Intersection Signal Delay: 0.0	Intersection LOS: A
Intersection Capacity Utilization 0.0%	ICU Level of Service A
Analysis Period (min) 15	

Splits and Phases: 34: SR-101L Off Ramp & Grand Ave

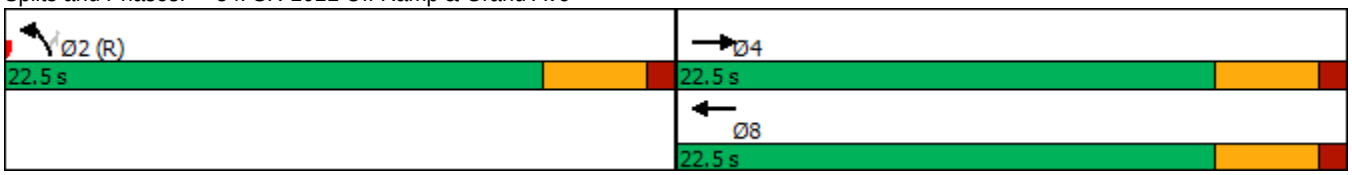

Lane Group	EBR	WBU	WBR
Lane Configurations			
Traffic Volume (vph)	1670	680	2120
Future Volume (vph)	1670	680	2120
Turn Type	Prot	Prot	Free
Protected Phases	8	1	
Permitted Phases			Free
Detector Phase	8	1	
Switch Phase			
Minimum Initial (s)	5.0	5.0	
Minimum Split (s)	9.5	9.5	
Total Split (s)	19.0	41.0	
Total Split (%)	31.7%	68.3%	
Yellow Time (s)	3.5	3.5	
All-Red Time (s)	1.0	1.0	
Lost Time Adjust (s)	0.0	0.0	
Total Lost Time (s)	4.5	4.5	
Lead/Lag			
Lead-Lag Optimize?			
Recall Mode	None	None	
Act Effct Green (s)	12.1	38.9	60.0
Actuated g/C Ratio	0.20	0.65	1.00
v/c Ratio	0.67	0.33	0.64
Control Delay	1.3	4.6	1.2
Queue Delay	0.0	0.0	0.0
Total Delay	1.3	4.6	1.2
LOS	A	A	A
Approach Delay			
Approach LOS			

Intersection Summary	
Cycle Length: 60	
Actuated Cycle Length: 60	
Offset: 54 (90%), Referenced to phase 2: and 6:, Start of Green	
Natural Cycle: 40	
Control Type: Actuated-Coordinated	
Maximum v/c Ratio: 0.67	
Intersection Signal Delay: 1.7	Intersection LOS: A
Intersection Capacity Utilization 42.7%	ICU Level of Service A
Analysis Period (min) 15	

Splits and Phases: 15: Westbound Loon

Lane Group	EBT	EBR	WBT	WBR	NBT	NBR	SBT	SBR
Lane Configurations								
Traffic Volume (vph)	1580	140	1540	1020	360	170	330	1090
Future Volume (vph)	1580	140	1540	1020	360	170	330	1090
Turn Type	NA	Perm	NA	Perm	NA	Perm	NA	Perm
Protected Phases	4		8		2		6	
Permitted Phases		4		8		2		6
Detector Phase	4	4	8	8	2	2	6	6
Switch Phase								
Minimum Initial (s)	5.0	5.0	5.0	5.0	7.0	7.0	7.0	7.0
Minimum Split (s)	22.5	22.5	22.5	22.5	24.9	24.9	26.5	26.5
Total Split (s)	57.0	57.0	57.0	57.0	63.0	63.0	63.0	63.0
Total Split (%)	47.5%	47.5%	47.5%	47.5%	52.5%	52.5%	52.5%	52.5%
Yellow Time (s)	3.5	3.5	3.5	3.5	4.3	4.3	4.3	4.3
All-Red Time (s)	1.0	1.0	1.0	1.0	2.6	2.6	2.4	2.4
Lost Time Adjust (s)	0.0	0.0	0.0	0.0	0.0	0.0	0.0	0.0
Total Lost Time (s)	4.5	4.5	4.5	4.5	6.9	6.9	6.7	6.7
Lead/Lag								
Lead-Lag Optimize?								
Recall Mode	None	None	None	None	C-Max	C-Max	C-Max	C-Max
Act Effct Green (s)	52.5	52.5	52.5	52.5	56.1	56.1	56.3	56.3
Actuated g/C Ratio	0.44	0.44	0.44	0.44	0.47	0.47	0.47	0.47
v/c Ratio	0.77	0.20	0.75	0.91	0.24	0.25	0.42	0.91
Control Delay	31.0	4.4	26.8	36.4	19.6	18.8	18.4	31.5
Queue Delay	0.0	0.0	0.0	0.0	0.0	0.0	0.0	0.0
Total Delay	31.0	4.4	26.8	36.4	19.6	18.8	18.4	31.5
LOS	C	A	C	D	B	B	B	C
Approach Delay	28.9		30.6		19.4		28.5	
Approach LOS	C		C		B		C	

Intersection Summary	
Cycle Length: 120	
Actuated Cycle Length: 120	
Offset: 0 (0%), Referenced to phase 2:NBT and 6:SBT, Start of Green	
Natural Cycle: 75	
Control Type: Actuated-Coordinated	
Maximum v/c Ratio: 0.91	
Intersection Signal Delay: 28.7	Intersection LOS: C
Intersection Capacity Utilization 83.1%	ICU Level of Service E
Analysis Period (min) 15	

Splits and Phases: 37: 91st Ave & Grand Ave

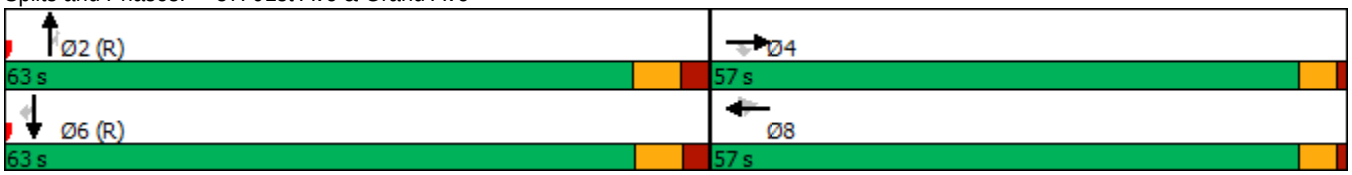

Lane Group	EBL	EBT	WBL	WBT	WBR	NBL	NBT	NBR	SBL	SBT
Lane Configurations										
Traffic Volume (vph)	80	20	150	10	100	110	1060	100	60	680
Future Volume (vph)	80	20	150	10	100	110	1060	100	60	680
Turn Type	Prot	NA	Prot	NA	Perm	Prot	NA	Perm	Prot	NA
Protected Phases	7	4	3	8		5	2		1	6
Permitted Phases					8			2		
Detector Phase	7	4	3	8	8	5	2	2	1	6
Switch Phase										
Minimum Initial (s)	5.0	7.0	5.0	7.0	7.0	5.0	7.0	7.0	7.0	7.0
Minimum Split (s)	11.3	24.3	11.1	24.1	24.1	11.1	24.1	24.1	12.8	23.8
Total Split (s)	19.0	24.3	19.3	24.6	24.6	22.0	60.4	60.4	16.0	54.4
Total Split (%)	15.8%	20.3%	16.1%	20.5%	20.5%	18.3%	50.3%	50.3%	13.3%	45.3%
Yellow Time (s)	4.3	4.3	4.3	4.3	4.3	4.3	4.3	4.3	4.3	4.3
All-Red Time (s)	2.0	2.0	1.8	1.8	1.8	1.8	1.8	1.8	1.5	1.5
Lost Time Adjust (s)	0.0	0.0	0.0	0.0	0.0	0.0	0.0	0.0	0.0	0.0
Total Lost Time (s)	6.3	6.3	6.1	6.1	6.1	6.1	6.1	6.1	5.8	5.8
Lead/Lag	Lead	Lag	Lead	Lag	Lag	Lead	Lag	Lag	Lead	Lag
Lead-Lag Optimize?	Yes	Yes	Yes	Yes	Yes	Yes	Yes	Yes	Yes	Yes
Recall Mode	None	None	None	None	None	None	C-Max	C-Max	None	C-Max
Act Effct Green (s)	10.6	22.9	10.9	9.5	20.6	12.9	58.0	58.0	9.1	51.6
Actuated g/C Ratio	0.09	0.19	0.09	0.08	0.17	0.11	0.48	0.48	0.08	0.43
v/c Ratio	0.56	0.42	0.58	0.67	0.29	0.64	0.68	0.13	0.49	0.56
Control Delay	66.2	13.0	67.2	75.8	5.5	73.0	22.5	0.9	65.7	27.5
Queue Delay	0.0	0.0	0.0	0.0	0.0	0.0	0.0	0.0	0.0	0.0
Total Delay	66.2	13.0	67.2	75.8	5.5	73.0	22.5	0.9	65.7	27.5
LOS	E	B	E	E	A	E	C	A	E	C
Approach Delay		30.0		46.1			25.2			30.3
Approach LOS		C		D			C			C

Intersection Summary	
Cycle Length: 120	
Actuated Cycle Length: 120	
Offset: 5 (4%), Referenced to phase 2:NBT and 6:SBT, Start of Green	
Natural Cycle: 90	
Control Type: Actuated-Coordinated	
Maximum v/c Ratio: 0.68	
Intersection Signal Delay: 29.4	Intersection LOS: C
Intersection Capacity Utilization 71.5%	ICU Level of Service C
Analysis Period (min) 15	

Splits and Phases: 42: Cactus Rd & 91st Ave

Lane Group	EBU	EBR	WBT
Lane Configurations			
Traffic Volume (vph)	780	1600	1910
Future Volume (vph)	780	1600	1910
Turn Type	Prot	Prot	NA
Protected Phases	7	7	8
Permitted Phases			
Detector Phase	7	7	8
Switch Phase			
Minimum Initial (s)	5.0	5.0	5.0
Minimum Split (s)	9.5	9.5	22.5
Total Split (s)	24.0	24.0	36.0
Total Split (%)	40.0%	40.0%	60.0%
Yellow Time (s)	3.5	3.5	3.5
All-Red Time (s)	1.0	1.0	1.0
Lost Time Adjust (s)	0.0	0.0	0.0
Total Lost Time (s)	4.5	4.5	4.5
Lead/Lag	Lead	Lead	Lag
Lead-Lag Optimize?	Yes	Yes	Yes
Recall Mode	None	None	None
Act Effct Green (s)	19.5	19.5	31.5
Actuated g/C Ratio	0.32	0.32	0.52
v/c Ratio	0.76	0.61	0.78
Control Delay	20.8	4.8	14.0
Queue Delay	0.0	0.0	0.0
Total Delay	20.8	4.8	14.0
LOS	C	A	B
Approach Delay			14.0
Approach LOS			B

Intersection Summary	
Cycle Length: 60	
Actuated Cycle Length: 60	
Offset: 35 (58%), Referenced to phase 2: and 6:, Start of Green	
Natural Cycle: 50	
Control Type: Actuated-Coordinated	
Maximum v/c Ratio: 0.78	
Intersection Signal Delay: 11.8	Intersection LOS: B
Intersection Capacity Utilization 66.2%	ICU Level of Service C
Analysis Period (min) 15	

Splits and Phases: 35: Eastbound Loon

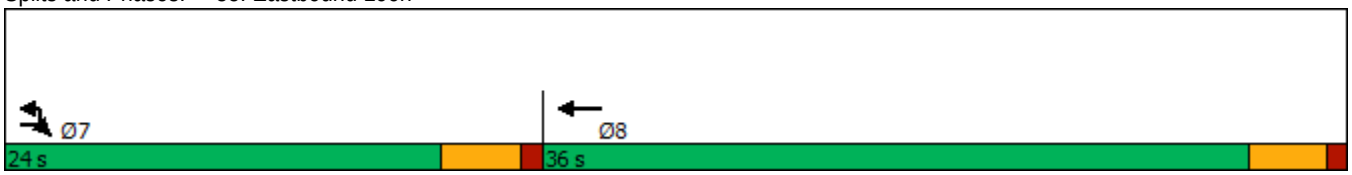

Lane Group	EBT	WBL	WBT	NBL
Lane Configurations				
Traffic Volume (vph)	2460	70	1290	120
Future Volume (vph)	2460	70	1290	120
Turn Type	NA	Prot	NA	Prot
Protected Phases	4	3	8	2
Permitted Phases				
Detector Phase	4	3	8	2
Switch Phase				
Minimum Initial (s)	7.0	7.0	7.0	7.0
Minimum Split (s)	23.8	12.8	23.8	24.6
Total Split (s)	77.0	14.8	91.8	28.2
Total Split (%)	64.2%	12.3%	76.5%	23.5%
Yellow Time (s)	4.3	4.3	4.3	4.3
All-Red Time (s)	1.5	1.5	1.5	2.3
Lost Time Adjust (s)	0.0	0.0	0.0	0.0
Total Lost Time (s)	5.8	5.8	5.8	6.6
Lead/Lag	Lag	Lead		
Lead-Lag Optimize?	Yes	Yes		
Recall Mode	None	None	None	C-Max
Act Effct Green (s)	71.4	8.6	83.2	24.4
Actuated g/C Ratio	0.60	0.07	0.69	0.20
v/c Ratio	0.94	0.61	0.41	0.65
Control Delay	29.7	75.0	8.1	48.5
Queue Delay	0.0	0.0	0.0	0.0
Total Delay	29.7	75.0	8.1	48.5
LOS	C	E	A	D
Approach Delay	29.7		11.5	48.5
Approach LOS	C		B	D

Intersection Summary	
Cycle Length: 120	
Actuated Cycle Length: 120	
Offset: 3 (3%), Referenced to phase 2:NBL and 6:, Start of Green	
Natural Cycle: 90	
Control Type: Actuated-Coordinated	
Maximum v/c Ratio: 0.94	
Intersection Signal Delay: 24.7	Intersection LOS: C
Intersection Capacity Utilization 81.3%	ICU Level of Service D
Analysis Period (min) 15	

Splits and Phases: 7: 113th Ave & Grand Ave

Lane Group	EBL	EBT	WBL	WBT	NBL	NBT	NBR	SBL	SBT	SBR
Lane Configurations										
Traffic Volume (vph)	170	2430	110	1220	100	160	190	50	110	60
Future Volume (vph)	170	2430	110	1220	100	160	190	50	110	60
Turn Type	Prot	NA	Prot	NA	Prot	NA	Perm	Prot	NA	pm+ov
Protected Phases	7	4	3	8	5	2		1	6	7
Permitted Phases							2			6
Detector Phase	7	4	3	8	5	2	2	1	6	7
Switch Phase										
Minimum Initial (s)	7.0	7.0	7.0	7.0	7.0	7.0	7.0	7.0	7.0	7.0
Minimum Split (s)	13.7	24.7	13.3	24.3	24.6	24.6	24.6	24.3	24.3	13.7
Total Split (s)	20.6	86.0	13.6	79.0	24.8	26.0	26.0	24.4	25.6	20.6
Total Split (%)	13.7%	57.3%	9.1%	52.7%	16.5%	17.3%	17.3%	16.3%	17.1%	13.7%
Yellow Time (s)	4.3	4.3	4.3	4.3	4.3	4.3	4.3	4.3	4.3	4.3
All-Red Time (s)	2.4	2.4	2.0	2.0	2.3	2.3	2.3	2.0	2.0	2.4
Lost Time Adjust (s)	0.0	0.0	0.0	0.0	0.0	0.0	0.0	0.0	0.0	0.0
Total Lost Time (s)	6.7	6.7	6.3	6.3	6.6	6.6	6.6	6.3	6.3	6.7
Lead/Lag	Lead	Lag	Lead	Lag	Lead	Lag	Lag	Lead	Lag	Lead
Lead-Lag Optimize?	Yes	Yes	Yes	Yes	Yes	Yes	Yes	Yes	Yes	Yes
Recall Mode	None	None	None	None	Max	C-Max	C-Max	Max	Max	None
Act Effct Green (s)	12.5	79.3	7.3	74.1	18.2	19.4	19.4	18.1	19.3	38.1
Actuated g/C Ratio	0.08	0.53	0.05	0.49	0.12	0.13	0.13	0.12	0.13	0.25
v/c Ratio	0.64	0.99	0.74	0.56	0.26	0.38	0.55	0.25	0.50	0.14
Control Delay	76.9	50.0	96.1	27.8	61.7	62.5	15.3	63.2	68.6	7.8
Queue Delay	0.0	1.5	0.0	0.0	0.0	0.0	0.0	0.0	0.0	0.0
Total Delay	76.9	51.5	96.1	27.8	61.7	62.5	15.3	63.2	68.6	7.8
LOS	E	D	F	C	E	E	B	E	E	A
Approach Delay		53.1		33.3		42.4			50.8	
Approach LOS		D		C		D			D	

Intersection Summary	
Cycle Length: 150	
Actuated Cycle Length: 150	
Offset: 0 (0%), Referenced to phase 2:NBT, Start of Green	
Natural Cycle: 140	
Control Type: Actuated-Coordinated	
Maximum v/c Ratio: 0.99	
Intersection Signal Delay: 46.2	Intersection LOS: D
Intersection Capacity Utilization 86.9%	ICU Level of Service E
Analysis Period (min) 15	

Splits and Phases: 11: 111th Ave & Grand Ave

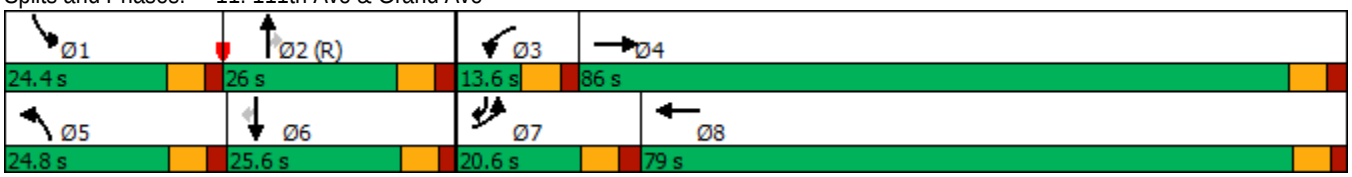

Lane Group	EBL	EBT	WBL	WBT	NBL	NBT	NBR	SBL	SBT
Lane Configurations									
Traffic Volume (vph)	190	2470	70	1290	90	220	90	60	220
Future Volume (vph)	190	2470	70	1290	90	220	90	60	220
Turn Type	Prot	NA	Prot	NA	Prot	NA	Perm	Prot	NA
Protected Phases	7	4	3	8	5	2		1	6
Permitted Phases							2		
Detector Phase	7	4	3	8	5	2	2	1	6
Switch Phase									
Minimum Initial (s)	7.0	7.0	5.0	7.0	5.0	7.0	7.0	5.0	7.0
Minimum Split (s)	14.3	25.3	12.0	25.0	11.7	24.7	24.7	11.5	24.5
Total Split (s)	28.6	67.6	12.0	51.0	14.2	27.4	27.4	13.0	26.2
Total Split (%)	23.8%	56.3%	10.0%	42.5%	11.8%	22.8%	22.8%	10.8%	21.8%
Yellow Time (s)	4.3	4.3	4.3	4.3	4.3	4.3	4.3	4.3	4.3
All-Red Time (s)	3.0	3.0	2.7	2.7	2.4	2.4	2.4	2.2	2.2
Lost Time Adjust (s)	0.0	0.0	0.0	0.0	0.0	0.0	0.0	0.0	0.0
Total Lost Time (s)	7.3	7.3	7.0	7.0	6.7	6.7	6.7	6.5	6.5
Lead/Lag	Lead	Lag	Lead	Lag	Lead	Lag	Lag	Lead	Lag
Lead-Lag Optimize?	Yes	Yes	Yes	Yes	Yes	Yes	Yes	Yes	Yes
Recall Mode	None	None	None	None	None	C-Max	C-Max	None	C-Max
Act Effct Green (s)	18.2	60.3	5.0	47.1	7.5	23.3	23.3	6.5	19.7
Actuated g/C Ratio	0.15	0.50	0.04	0.39	0.06	0.19	0.19	0.05	0.16
v/c Ratio	0.77	1.07	1.06	0.76	0.88	0.34	0.20	0.68	0.55
Control Delay	68.0	68.1	164.3	16.9	114.5	44.6	0.9	88.8	44.6
Queue Delay	0.0	0.0	0.0	0.0	0.0	0.0	0.0	0.0	0.0
Total Delay	68.0	68.1	164.3	16.9	114.5	44.6	0.9	88.8	44.6
LOS	E	E	F	B	F	D	A	F	D
Approach Delay		68.1		24.2		50.5			52.0
Approach LOS		E		C		D			D

Intersection Summary	
Cycle Length: 120	
Actuated Cycle Length: 120	
Offset: 100 (83%), Referenced to phase 2:NBT and 6:SBT, Start of Green	
Natural Cycle: 120	
Control Type: Actuated-Coordinated	
Maximum v/c Ratio: 1.07	
Intersection Signal Delay: 52.6	Intersection LOS: D
Intersection Capacity Utilization 89.1%	ICU Level of Service E
Analysis Period (min) 15	

Splits and Phases: 16: 107th Ave & Grand Ave

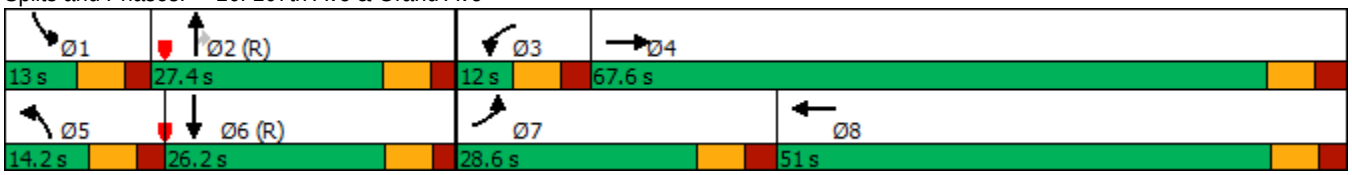

Lane Group	EBL	EBT	WBL	WBT	NBL	NBT	NBR	SBL	SBT
Lane Configurations									
Traffic Volume (vph)	260	2260	40	1310	40	260	40	60	200
Future Volume (vph)	260	2260	40	1310	40	260	40	60	200
Turn Type	Prot	NA	Prot	NA	Prot	NA	Perm	Prot	NA
Protected Phases	7	4	3	8	5	2		1	6
Permitted Phases							2		
Detector Phase	7	4	3	8	5	2	2	1	6
Switch Phase									
Minimum Initial (s)	7.0	7.0	7.0	7.0	5.0	7.0	7.0	5.0	7.0
Minimum Split (s)	13.1	64.1	13.4	24.4	11.5	24.5	24.5	11.5	24.5
Total Split (s)	27.2	66.0	13.4	52.2	12.1	28.6	28.6	12.0	28.5
Total Split (%)	22.7%	55.0%	11.2%	43.5%	10.1%	23.8%	23.8%	10.0%	23.8%
Yellow Time (s)	4.3	4.3	4.3	4.3	4.3	4.3	4.3	4.3	4.3
All-Red Time (s)	1.8	1.8	2.1	2.1	2.2	2.2	2.2	2.2	2.2
Lost Time Adjust (s)	0.0	0.0	0.0	0.0	0.0	0.0	0.0	0.0	0.0
Total Lost Time (s)	6.1	6.1	6.4	6.4	6.5	6.5	6.5	6.5	6.5
Lead/Lag	Lead	Lag	Lead	Lag	Lead	Lag	Lag	Lead	Lag
Lead-Lag Optimize?	Yes	Yes	Yes	Yes	Yes	Yes	Yes	Yes	Yes
Recall Mode	None	None	None	None	None	C-Max	C-Max	None	C-Max
Act Effct Green (s)	20.7	61.7	7.0	45.3	5.6	22.7	22.7	5.8	25.3
Actuated g/C Ratio	0.17	0.51	0.06	0.38	0.05	0.19	0.19	0.05	0.21
v/c Ratio	0.93	0.95	0.43	0.91	0.52	0.80	0.09	0.76	0.44
Control Delay	74.2	6.2	79.6	15.4	78.5	64.9	0.4	103.7	34.7
Queue Delay	0.0	0.0	0.0	0.0	0.0	0.0	0.0	0.0	0.0
Total Delay	74.2	6.2	79.6	15.4	78.5	64.9	0.4	103.7	34.7
LOS	E	A	E	B	E	E	A	F	C
Approach Delay		13.1		16.9		59.0			45.8
Approach LOS		B		B		E			D

Intersection Summary	
Cycle Length: 120	
Actuated Cycle Length: 120	
Offset: 36 (30%), Referenced to phase 2:NBT and 6:SBT, Start of Green	
Natural Cycle: 115	
Control Type: Actuated-Coordinated	
Maximum v/c Ratio: 0.95	
Intersection Signal Delay: 20.1	Intersection LOS: C
Intersection Capacity Utilization 89.3%	ICU Level of Service E
Analysis Period (min) 15	

Splits and Phases: 20: 103rd Ave & Grand Ave

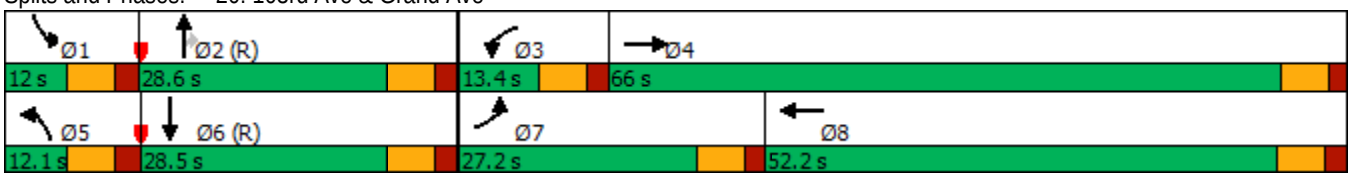

Lane Group	EBL	EBT	WBL	WBT	WBR	NBL	NBT	NBR	SBL	SBT	SBR
Lane Configurations											
Traffic Volume (vph)	430	1950	20	1400	580	70	520	40	280	230	190
Future Volume (vph)	430	1950	20	1400	580	70	520	40	280	230	190
Turn Type	Prot	NA	Prot	NA	Perm	Prot	NA	Perm	Prot	NA	Perm
Protected Phases	7	4	3	8		5	2		1	6	
Permitted Phases					8			2			6
Detector Phase	7	4	3	8	8	5	2	2	1	6	6
Switch Phase											
Minimum Initial (s)	7.0	7.0	7.0	7.0	7.0	5.0	7.0	7.0	5.0	7.0	7.0
Minimum Split (s)	13.6	24.6	13.6	24.6	24.6	11.4	24.4	24.4	11.4	24.4	24.4
Total Split (s)	24.2	59.2	13.6	48.6	48.6	13.0	28.8	28.8	18.4	34.2	34.2
Total Split (%)	20.2%	49.3%	11.3%	40.5%	40.5%	10.8%	24.0%	24.0%	15.3%	28.5%	28.5%
Yellow Time (s)	4.3	4.3	4.3	4.3	4.3	4.3	4.3	4.3	4.3	4.3	4.3
All-Red Time (s)	2.3	2.3	2.3	2.3	2.3	2.1	2.1	2.1	2.1	2.1	2.1
Lost Time Adjust (s)	0.0	0.0	0.0	0.0	0.0	0.0	0.0	0.0	0.0	0.0	0.0
Total Lost Time (s)	6.6	6.6	6.6	6.6	6.6	6.4	6.4	6.4	6.4	6.4	6.4
Lead/Lag	Lead	Lag	Lead	Lag	Lag	Lead	Lag	Lag	Lead	Lag	Lag
Lead-Lag Optimize?	Yes	Yes	Yes	Yes	Yes	Yes	Yes	Yes	Yes	Yes	Yes
Recall Mode	None	None	None	None	None	None	C-Max	C-Max	None	C-Max	C-Max
Act Effct Green (s)	17.6	58.0	7.0	42.0	42.0	6.5	22.4	22.4	12.0	30.4	30.4
Actuated g/C Ratio	0.15	0.48	0.06	0.35	0.35	0.05	0.19	0.19	0.10	0.25	0.25
v/c Ratio	0.94	0.89	0.11	0.88	0.94	0.42	0.87	0.09	0.91	0.29	0.38
Control Delay	79.4	10.9	55.0	43.8	48.2	62.0	61.9	0.4	83.6	38.2	7.0
Queue Delay	0.0	0.0	0.0	0.0	0.0	0.0	0.0	0.0	0.0	0.0	0.0
Total Delay	79.4	10.9	55.0	43.8	48.2	62.0	61.9	0.4	83.6	38.2	7.0
LOS	E	B	D	D	D	E	E	A	F	D	A
Approach Delay		23.1		45.2			58.0			47.9	
Approach LOS		C		D			E			D	

Intersection Summary	
Cycle Length: 120	
Actuated Cycle Length: 120	
Offset: 108 (90%), Referenced to phase 2:NBT and 6:SBT, Start of Green	
Natural Cycle: 110	
Control Type: Actuated-Coordinated	
Maximum v/c Ratio: 0.94	
Intersection Signal Delay: 37.6	Intersection LOS: D
Intersection Capacity Utilization 88.4%	ICU Level of Service E
Analysis Period (min) 15	

Splits and Phases: 25: 99th Ave & Grand Ave

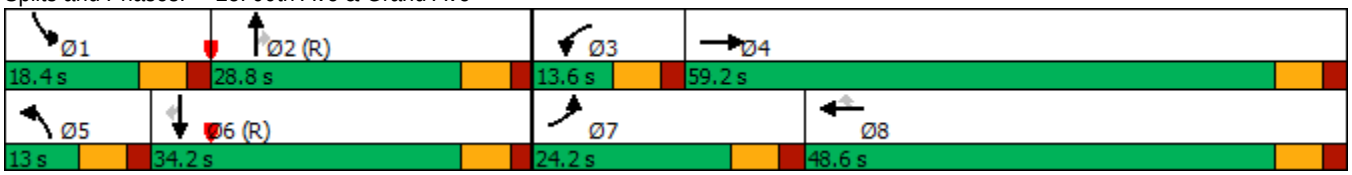

Lane Group	EBT	WBL	WBT
Lane Configurations			
Traffic Volume (vph)	1850	60	2020
Future Volume (vph)	1850	60	2020
Turn Type	NA	Prot	NA
Protected Phases	4	3	8
Permitted Phases			
Detector Phase	4	3	8
Switch Phase			
Minimum Initial (s)	7.0	7.0	7.0
Minimum Split (s)	23.8	12.8	23.8
Total Split (s)	94.0	16.0	110.0
Total Split (%)	85.5%	14.5%	100.0%
Yellow Time (s)	4.3	4.3	4.3
All-Red Time (s)	1.5	1.5	1.5
Lost Time Adjust (s)	0.0	0.0	0.0
Total Lost Time (s)	5.8	5.8	5.8
Lead/Lag	Lag	Lead	
Lead-Lag Optimize?	Yes	Yes	
Recall Mode	None	None	None
Act Effct Green (s)	94.3	7.8	110.0
Actuated g/C Ratio	0.86	0.07	1.00
v/c Ratio	0.58	0.27	0.44
Control Delay	3.4	53.6	1.7
Queue Delay	0.1	0.0	0.0
Total Delay	3.5	53.6	1.7
LOS	A	D	A
Approach Delay	3.5		3.1
Approach LOS	A		A

Intersection Summary	
Cycle Length: 110	
Actuated Cycle Length: 110	
Offset: 5 (5%), Referenced to phase 2: and 6:, Start of Green	
Natural Cycle: 50	
Control Type: Actuated-Coordinated	
Maximum v/c Ratio: 0.58	
Intersection Signal Delay: 3.3	Intersection LOS: A
Intersection Capacity Utilization 95.4%	ICU Level of Service F
Analysis Period (min) 15	

Splits and Phases: 30: SR-101L On Ramp & Grand Ave

Lane Group	EBT	WBT	NBL	NBR
Lane Configurations				
Traffic Volume (vph)	1850	1430	650	100
Future Volume (vph)	1850	1430	650	100
Turn Type	NA	NA	Prot	Perm
Protected Phases	4	8	2	
Permitted Phases				2
Detector Phase	4	8	2	2
Switch Phase				
Minimum Initial (s)	7.0	7.0	7.0	7.0
Minimum Split (s)	24.3	23.8	24.6	24.6
Total Split (s)	66.0	66.0	44.0	44.0
Total Split (%)	60.0%	60.0%	40.0%	40.0%
Yellow Time (s)	4.3	4.3	4.3	4.3
All-Red Time (s)	2.0	1.5	2.3	2.3
Lost Time Adjust (s)	0.0	0.0	0.0	0.0
Total Lost Time (s)	6.3	5.8	6.6	6.6
Lead/Lag				
Lead-Lag Optimize?				
Recall Mode	None	None	C-Max	C-Max
Act Effct Green (s)	56.9	57.4	40.2	40.2
Actuated g/C Ratio	0.52	0.52	0.37	0.37
v/c Ratio	0.76	0.40	0.57	0.19
Control Delay	20.8	16.1	31.0	24.7
Queue Delay	0.4	0.0	0.0	0.0
Total Delay	21.2	16.1	31.0	24.7
LOS	C	B	C	C
Approach Delay	21.2	16.1	30.1	
Approach LOS	C	B	C	

Intersection Summary	
Cycle Length: 110	
Actuated Cycle Length: 110	
Offset: 92 (84%), Referenced to phase 2:NBL and 6:, Start of Green	
Natural Cycle: 60	
Control Type: Actuated-Coordinated	
Maximum v/c Ratio: 0.76	
Intersection Signal Delay: 21.1	Intersection LOS: C
Intersection Capacity Utilization 95.4%	ICU Level of Service F
Analysis Period (min) 15	

Splits and Phases: 34: SR-101L Off Ramp & Grand Ave

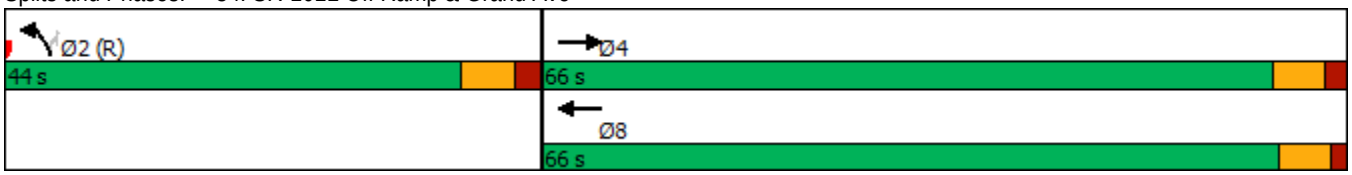

Lane Group	EBT	EBR	WBT	WBR	NBT	NBR	SBT	SBR
Lane Configurations								
Traffic Volume (vph)	1240	710	650	260	1200	270	390	780
Future Volume (vph)	1240	710	650	260	1200	270	390	780
Turn Type	NA	Perm	NA	Perm	NA	Perm	NA	custom
Protected Phases	4		8		2		6	7
Permitted Phases		4		8		2		6
Detector Phase	4	4	8	8	2	2	6	7
Switch Phase								
Minimum Initial (s)	7.0	7.0	7.0	7.0	7.0	7.0	7.0	7.0
Minimum Split (s)	24.7	24.7	24.3	24.3	24.9	24.9	26.5	13.7
Total Split (s)	63.0	63.0	27.8	27.8	57.0	57.0	57.0	35.2
Total Split (%)	52.5%	52.5%	23.2%	23.2%	47.5%	47.5%	47.5%	29.3%
Yellow Time (s)	4.3	4.3	4.3	4.3	4.3	4.3	4.3	4.3
All-Red Time (s)	2.4	2.4	2.0	2.0	2.6	2.6	2.4	2.4
Lost Time Adjust (s)	0.0	0.0	0.0	0.0	0.0	0.0	0.0	0.0
Total Lost Time (s)	6.7	6.7	6.3	6.3	6.9	6.9	6.7	6.7
Lead/Lag			Lag	Lag				Lead
Lead-Lag Optimize?			Yes	Yes				Yes
Recall Mode	None	None	None	None	C-Max	C-Max	C-Max	None
Act Effct Green (s)	53.0	53.0	26.4	26.4	53.4	53.4	53.6	80.6
Actuated g/C Ratio	0.44	0.44	0.22	0.22	0.44	0.44	0.45	0.67
v/c Ratio	0.60	0.90	0.64	0.50	0.84	0.39	0.27	0.80
Control Delay	26.4	32.6	46.2	8.3	36.3	17.4	17.7	14.5
Queue Delay	0.0	0.0	0.0	0.0	0.0	0.0	0.0	0.0
Total Delay	26.4	32.6	46.2	8.3	36.3	17.4	17.7	14.5
LOS	C	C	D	A	D	B	B	B
Approach Delay	28.7		35.3		32.9		15.5	
Approach LOS	C		D		C		B	

Intersection Summary	
Cycle Length: 120	
Actuated Cycle Length: 120	
Offset: 0 (0%), Referenced to phase 2:NBT and 6:SBT, Start of Green	
Natural Cycle: 90	
Control Type: Actuated-Coordinated	
Maximum v/c Ratio: 0.90	
Intersection Signal Delay: 28.1	Intersection LOS: C
Intersection Capacity Utilization 71.7%	ICU Level of Service C
Analysis Period (min) 15	

Splits and Phases: 37: 91st Ave & Grand Ave

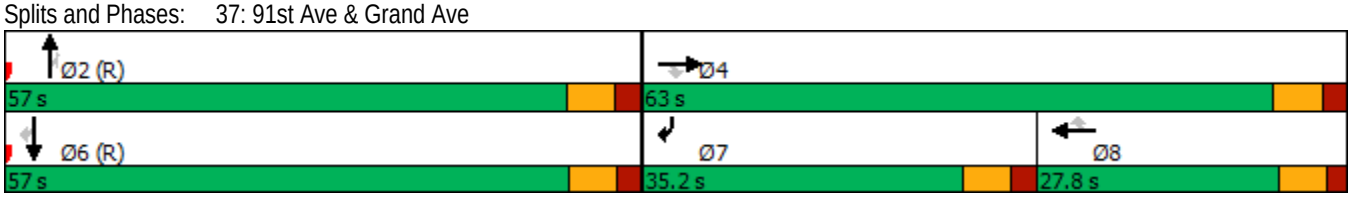

Lane Group	EBL	EBT	WBL	WBT	WBR	NBL	NBT	NBR	SBL	SBT
Lane Configurations										
Traffic Volume (vph)	80	20	150	10	100	110	1060	100	60	680
Future Volume (vph)	80	20	150	10	100	110	1060	100	60	680
Turn Type	Prot	NA	Prot	NA	Perm	Prot	NA	Perm	Prot	NA
Protected Phases	7	4	3	8		5	2		1	6
Permitted Phases					8			2		
Detector Phase	7	4	3	8	8	5	2	2	1	6
Switch Phase										
Minimum Initial (s)	5.0	7.0	5.0	7.0	7.0	5.0	7.0	7.0	7.0	7.0
Minimum Split (s)	11.3	24.3	11.1	24.1	24.1	11.1	24.1	24.1	12.8	23.8
Total Split (s)	19.0	24.3	19.3	24.6	24.6	22.0	60.4	60.4	16.0	54.4
Total Split (%)	15.8%	20.3%	16.1%	20.5%	20.5%	18.3%	50.3%	50.3%	13.3%	45.3%
Yellow Time (s)	4.3	4.3	4.3	4.3	4.3	4.3	4.3	4.3	4.3	4.3
All-Red Time (s)	2.0	2.0	1.8	1.8	1.8	1.8	1.8	1.8	1.5	1.5
Lost Time Adjust (s)	0.0	0.0	0.0	0.0	0.0	0.0	0.0	0.0	0.0	0.0
Total Lost Time (s)	6.3	6.3	6.1	6.1	6.1	6.1	6.1	6.1	5.8	5.8
Lead/Lag	Lead	Lag	Lead	Lag	Lag	Lead	Lag	Lag	Lead	Lag
Lead-Lag Optimize?	Yes	Yes	Yes	Yes	Yes	Yes	Yes	Yes	Yes	Yes
Recall Mode	None	None	None	None	None	None	C-Max	C-Max	None	C-Max
Act Effct Green (s)	10.6	22.9	10.9	9.5	20.6	12.9	58.0	58.0	9.1	51.6
Actuated g/C Ratio	0.09	0.19	0.09	0.08	0.17	0.11	0.48	0.48	0.08	0.43
v/c Ratio	0.56	0.42	0.58	0.67	0.29	0.64	0.68	0.13	0.49	0.56
Control Delay	66.2	13.0	67.2	75.8	5.5	70.4	20.9	3.8	65.7	27.5
Queue Delay	0.0	0.0	0.0	0.0	0.0	0.0	0.0	0.0	0.0	0.0
Total Delay	66.2	13.0	67.2	75.8	5.5	70.4	20.9	3.8	65.7	27.5
LOS	E	B	E	E	A	E	C	A	E	C
Approach Delay		30.0		46.1			23.8			30.3
Approach LOS		C		D			C			C

Intersection Summary	
Cycle Length: 120	
Actuated Cycle Length: 120	
Offset: 0 (0%), Referenced to phase 2:NBT and 6:SBT, Start of Green	
Natural Cycle: 90	
Control Type: Actuated-Coordinated	
Maximum v/c Ratio: 0.68	
Intersection Signal Delay: 28.7	Intersection LOS: C
Intersection Capacity Utilization 71.5%	ICU Level of Service C
Analysis Period (min) 15	

Splits and Phases: 42: Cactus Rd & 91st Ave

Lane Group	EBT	WBL	WBT	NBL
Lane Configurations				
Traffic Volume (vph)	1790	70	2840	240
Future Volume (vph)	1790	70	2840	240
Turn Type	NA	Prot	NA	Prot
Protected Phases	4	3	8	2
Permitted Phases				
Detector Phase	4	3	8	2
Switch Phase				
Minimum Initial (s)	7.0	5.0	7.0	7.0
Minimum Split (s)	23.8	10.3	23.8	24.6
Total Split (s)	63.2	12.8	76.0	34.0
Total Split (%)	57.5%	11.6%	69.1%	30.9%
Yellow Time (s)	4.3	4.3	4.3	4.3
All-Red Time (s)	1.5	1.0	1.5	2.3
Lost Time Adjust (s)	0.0	0.0	0.0	0.0
Total Lost Time (s)	5.8	5.3	5.8	6.6
Lead/Lag	Lag	Lead		
Lead-Lag Optimize?	Yes	Yes		
Recall Mode	None	None	None	C-Max
Act Effct Green (s)	60.0	7.3	70.2	27.4
Actuated g/C Ratio	0.55	0.07	0.64	0.25
v/c Ratio	0.76	0.64	0.94	0.83
Control Delay	22.1	75.0	25.6	53.9
Queue Delay	0.0	0.0	0.0	0.0
Total Delay	22.1	75.0	25.6	53.9
LOS	C	E	C	D
Approach Delay	22.1		26.8	53.9
Approach LOS	C		C	D

Intersection Summary	
Cycle Length: 110	
Actuated Cycle Length: 110	
Offset: 0 (0%), Referenced to phase 2:NBL and 6:, Start of Green	
Natural Cycle: 90	
Control Type: Actuated-Coordinated	
Maximum v/c Ratio: 0.94	
Intersection Signal Delay: 26.8	Intersection LOS: C
Intersection Capacity Utilization 84.6%	ICU Level of Service E
Analysis Period (min) 15	

Splits and Phases: 7: 113th Ave & Grand Ave

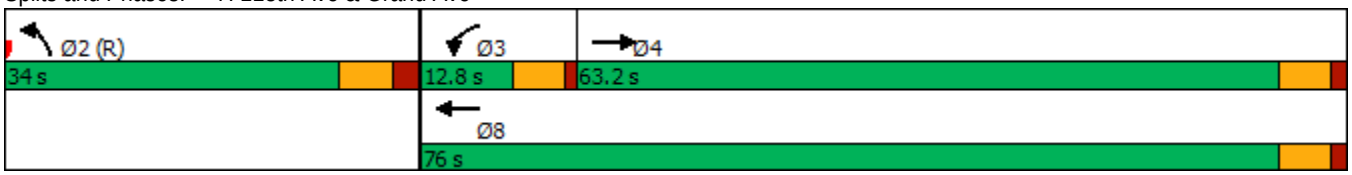

Lane Group	EBL	EBT	WBL	WBT	NBL	NBT	NBR	SBL	SBT	SBR
Lane Configurations										
Traffic Volume (vph)	90	1750	130	2400	210	170	190	60	150	310
Future Volume (vph)	90	1750	130	2400	210	170	190	60	150	310
Turn Type	Prot	NA	Prot	NA	Prot	NA	Perm	Prot	NA	pm+ov
Protected Phases	7	4	3	8	5	2		1	6	7
Permitted Phases							2			6
Detector Phase	7	4	3	8	5	2	2	1	6	7
Switch Phase										
Minimum Initial (s)	7.0	7.0	7.0	7.0	7.0	7.0	7.0	7.0	7.0	7.0
Minimum Split (s)	13.7	24.7	13.3	24.3	24.6	24.6	24.6	24.3	24.3	13.7
Total Split (s)	16.6	82.2	17.4	83.0	24.6	26.1	26.1	24.3	25.8	16.6
Total Split (%)	11.1%	54.8%	11.6%	55.3%	16.4%	17.4%	17.4%	16.2%	17.2%	11.1%
Yellow Time (s)	4.3	4.3	4.3	4.3	4.3	4.3	4.3	4.3	4.3	4.3
All-Red Time (s)	2.4	2.4	2.0	2.0	2.3	2.3	2.3	2.0	2.0	2.4
Lost Time Adjust (s)	0.0	0.0	0.0	0.0	0.0	0.0	0.0	0.0	0.0	0.0
Total Lost Time (s)	6.7	6.7	6.3	6.3	6.6	6.6	6.6	6.3	6.3	6.7
Lead/Lag	Lead	Lag	Lead	Lag	Lead	Lag	Lag	Lead	Lag	Lead
Lead-Lag Optimize?	Yes	Yes	Yes	Yes	Yes	Yes	Yes	Yes	Yes	Yes
Recall Mode	None	None	None	None	Max	C-Max	C-Max	Max	Max	None
Act Effct Green (s)	9.0	76.3	10.3	77.6	18.0	19.5	19.5	18.0	19.5	34.8
Actuated g/C Ratio	0.06	0.51	0.07	0.52	0.12	0.13	0.13	0.12	0.13	0.23
v/c Ratio	0.47	0.77	0.59	0.99	0.55	0.40	0.54	0.30	0.66	0.78
Control Delay	75.5	32.2	78.2	51.3	67.9	62.8	13.5	64.5	75.8	55.6
Queue Delay	0.0	0.0	0.0	0.0	0.0	0.0	0.0	0.0	0.0	0.0
Total Delay	75.5	32.2	78.2	51.3	67.9	62.8	13.5	64.5	75.8	55.6
LOS	E	C	E	D	E	E	B	E	E	E
Approach Delay		34.2		52.7		48.2			62.5	
Approach LOS		C		D		D			E	

Intersection Summary	
Cycle Length: 150	
Actuated Cycle Length: 150	
Offset: 0 (0%), Referenced to phase 2:NBT, Start of Green	
Natural Cycle: 150	
Control Type: Actuated-Coordinated	
Maximum v/c Ratio: 0.99	
Intersection Signal Delay: 46.8	Intersection LOS: D
Intersection Capacity Utilization 88.3%	ICU Level of Service E
Analysis Period (min) 15	

Splits and Phases: 11: 111th Ave & Grand Ave

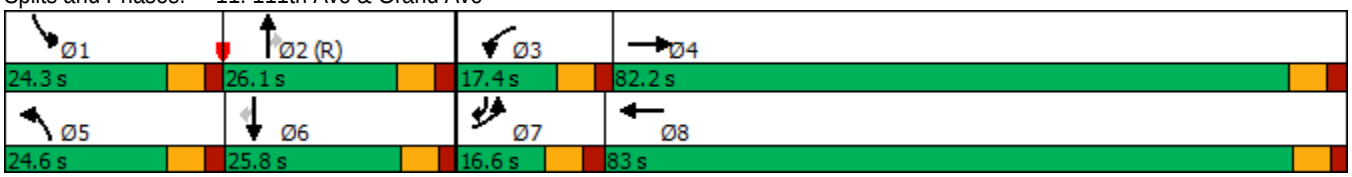

Lane Group	EBL	EBT	WBL	WBT	NBL	NBT	NBR	SBL	SBT
Lane Configurations									
Traffic Volume (vph)	80	1840	90	2200	210	230	70	100	290
Future Volume (vph)	80	1840	90	2200	210	230	70	100	290
Turn Type	Prot	NA	Prot	NA	Prot	NA	Perm	Prot	NA
Protected Phases	7	4	3	8	5	2		1	6
Permitted Phases							2		
Detector Phase	7	4	3	8	5	2	2	1	6
Switch Phase									
Minimum Initial (s)	7.0	7.0	7.0	7.0	5.0	7.0	7.0	5.0	7.0
Minimum Split (s)	14.3	25.3	14.0	25.0	11.7	24.7	24.7	11.5	24.5
Total Split (s)	14.6	58.6	14.0	58.0	22.2	26.3	26.3	21.1	25.2
Total Split (%)	12.2%	48.8%	11.7%	48.3%	18.5%	21.9%	21.9%	17.6%	21.0%
Yellow Time (s)	4.3	4.3	4.3	4.3	4.3	4.3	4.3	4.3	4.3
All-Red Time (s)	3.0	3.0	2.7	2.7	2.4	2.4	2.4	2.2	2.2
Lost Time Adjust (s)	0.0	0.0	0.0	0.0	0.0	0.0	0.0	0.0	0.0
Total Lost Time (s)	7.3	7.3	7.0	7.0	6.7	6.7	6.7	6.5	6.5
Lead/Lag	Lead	Lag	Lead	Lag	Lead	Lag	Lag	Lead	Lag
Lead-Lag Optimize?	Yes	Yes	Yes	Yes	Yes	Yes	Yes	Yes	Yes
Recall Mode	None	None	None	None	None	C-Max	C-Max	None	C-Max
Act Effct Green (s)	7.3	51.3	7.0	51.0	15.5	22.2	22.2	12.0	18.7
Actuated g/C Ratio	0.06	0.43	0.06	0.42	0.13	0.18	0.18	0.10	0.16
v/c Ratio	0.81	0.95	0.94	1.12	0.99	0.38	0.18	0.61	0.89
Control Delay	103.2	43.8	90.8	68.8	109.7	45.5	0.9	65.5	56.3
Queue Delay	0.0	0.0	0.0	0.0	0.0	0.0	0.0	0.0	0.0
Total Delay	103.2	43.8	90.8	68.8	109.7	45.5	0.9	65.5	56.3
LOS	F	D	F	E	F	D	A	E	E
Approach Delay		46.2		69.7		65.8			57.7
Approach LOS		D		E		E			E

Intersection Summary	
Cycle Length: 120	
Actuated Cycle Length: 120	
Offset: 96 (80%), Referenced to phase 2:NBT and 6:SBT, Start of Green	
Natural Cycle: 150	
Control Type: Actuated-Coordinated	
Maximum v/c Ratio: 1.12	
Intersection Signal Delay: 59.5	Intersection LOS: E
Intersection Capacity Utilization 99.4%	ICU Level of Service F
Analysis Period (min) 15	

Splits and Phases: 16: 107th Ave & Grand Ave

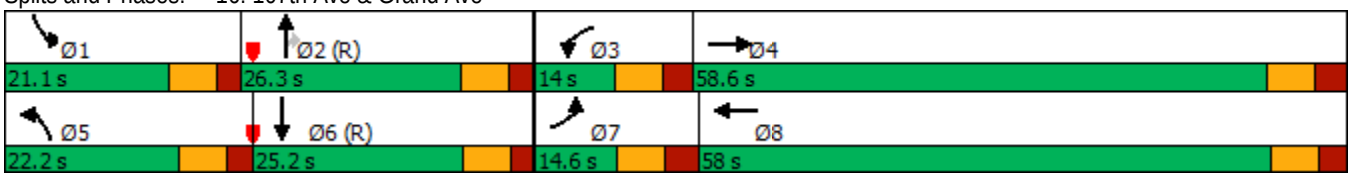

Lane Group	EBL	EBT	WBL	WBT	NBL	NBT	NBR	SBL	SBT
Lane Configurations									
Traffic Volume (vph)	120	1750	30	2090	70	200	60	200	250
Future Volume (vph)	120	1750	30	2090	70	200	60	200	250
Turn Type	Prot	NA	Prot	NA	Prot	NA	Perm	Prot	NA
Protected Phases	7	4	3	8	5	2		1	6
Permitted Phases							2		
Detector Phase	7	4	3	8	5	2	2	1	6
Switch Phase									
Minimum Initial (s)	5.0	7.0	5.0	7.0	5.0	7.0	7.0	5.0	7.0
Minimum Split (s)	11.1	24.1	11.4	24.4	11.5	24.5	24.5	11.5	24.5
Total Split (s)	15.4	60.9	11.5	57.0	15.0	26.3	26.3	21.3	32.6
Total Split (%)	12.8%	50.8%	9.6%	47.5%	12.5%	21.9%	21.9%	17.8%	27.2%
Yellow Time (s)	4.3	4.3	4.3	4.3	4.3	4.3	4.3	4.3	4.3
All-Red Time (s)	1.8	1.8	2.1	2.1	2.2	2.2	2.2	2.2	2.2
Lost Time Adjust (s)	0.0	0.0	0.0	0.0	0.0	0.0	0.0	0.0	0.0
Total Lost Time (s)	6.1	6.1	6.4	6.4	6.5	6.5	6.5	6.5	6.5
Lead/Lag	Lead	Lag	Lead	Lag	Lead	Lag	Lag	Lead	Lag
Lead-Lag Optimize?	Yes	Yes	Yes	Yes	Yes	Yes	Yes	Yes	Yes
Recall Mode	None	None	None	None	None	C-Max	C-Max	None	C-Max
Act Effct Green (s)	9.3	59.4	5.1	50.6	8.1	19.8	19.8	14.8	29.1
Actuated g/C Ratio	0.08	0.50	0.04	0.42	0.07	0.16	0.16	0.12	0.24
v/c Ratio	0.95	0.77	0.44	1.09	0.64	0.71	0.17	0.99	0.57
Control Delay	111.1	8.2	81.9	59.1	78.1	60.9	0.9	110.2	33.7
Queue Delay	0.0	0.0	0.0	0.0	0.0	0.0	0.0	0.0	0.0
Total Delay	111.1	8.2	81.9	59.1	78.1	60.9	0.9	110.2	33.7
LOS	F	A	F	E	E	E	A	F	C
Approach Delay		14.8		59.4		53.7			56.5
Approach LOS		B		E		D			E

Intersection Summary	
Cycle Length: 120	
Actuated Cycle Length: 120	
Offset: 48 (40%), Referenced to phase 2:NBT and 6:SBT, Start of Green	
Natural Cycle: 130	
Control Type: Actuated-Coordinated	
Maximum v/c Ratio: 1.09	
Intersection Signal Delay: 42.1	Intersection LOS: D
Intersection Capacity Utilization 91.7%	ICU Level of Service F
Analysis Period (min) 15	

Splits and Phases: 20: 103rd Ave & Grand Ave

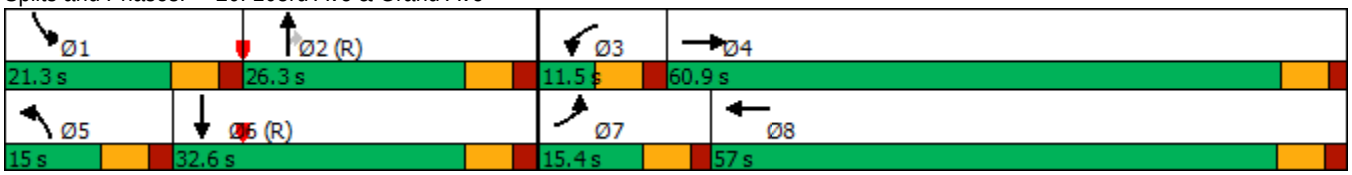

Lane Group	EBL	EBT	WBL	WBT	WBR	NBL	NBT	NBR	SBL	SBT	SBR
Lane Configurations											
Traffic Volume (vph)	210	1770	80	1960	350	50	320	50	340	470	250
Future Volume (vph)	210	1770	80	1960	350	50	320	50	340	470	250
Turn Type	Prot	NA	Prot	NA	Perm	Prot	NA	Perm	Prot	NA	Perm
Protected Phases	7	4	3	8		5	2		1	6	
Permitted Phases					8			2			6
Detector Phase	7	4	3	8	8	5	2	2	1	6	6
Switch Phase											
Minimum Initial (s)	5.0	7.0	5.0	7.0	7.0	5.0	7.0	7.0	5.0	7.0	7.0
Minimum Split (s)	11.6	24.6	11.6	24.6	24.6	11.4	24.4	24.4	11.4	24.4	24.4
Total Split (s)	16.0	62.2	11.8	58.0	58.0	11.6	25.8	25.8	20.2	34.4	34.4
Total Split (%)	13.3%	51.8%	9.8%	48.3%	48.3%	9.7%	21.5%	21.5%	16.8%	28.7%	28.7%
Yellow Time (s)	4.3	4.3	4.3	4.3	4.3	4.3	4.3	4.3	4.3	4.3	4.3
All-Red Time (s)	2.3	2.3	2.3	2.3	2.3	2.1	2.1	2.1	2.1	2.1	2.1
Lost Time Adjust (s)	0.0	0.0	0.0	0.0	0.0	0.0	0.0	0.0	0.0	0.0	0.0
Total Lost Time (s)	6.6	6.6	6.6	6.6	6.6	6.4	6.4	6.4	6.4	6.4	6.4
Lead/Lag	Lead	Lag	Lead	Lag	Lag	Lead	Lag	Lag	Lead	Lag	Lag
Lead-Lag Optimize?	Yes	Yes	Yes	Yes	Yes	Yes	Yes	Yes	Yes	Yes	Yes
Recall Mode	None	None	None	None	None	None	C-Max	C-Max	None	C-Max	C-Max
Act Effct Green (s)	9.4	55.6	5.2	51.4	51.4	5.2	19.4	19.4	13.8	30.3	30.3
Actuated g/C Ratio	0.08	0.46	0.04	0.43	0.43	0.04	0.16	0.16	0.12	0.25	0.25
v/c Ratio	0.85	0.84	0.58	0.97	0.45	0.36	0.60	0.12	0.93	0.57	0.53
Control Delay	89.8	19.4	72.0	46.9	8.1	62.8	51.7	0.6	83.3	42.8	21.6
Queue Delay	0.0	0.0	0.0	0.0	0.0	0.0	0.0	0.0	0.0	0.0	0.0
Total Delay	89.8	19.4	72.0	46.9	8.1	62.8	51.7	0.6	83.3	42.8	21.6
LOS	F	B	E	D	A	E	D	A	F	D	C
Approach Delay		26.6		42.1			47.0			50.8	
Approach LOS		C		D			D			D	

Intersection Summary	
Cycle Length: 120	
Actuated Cycle Length: 120	
Offset: 0 (0%), Referenced to phase 2:NBT and 6:SBT, Start of Green	
Natural Cycle: 110	
Control Type: Actuated-Coordinated	
Maximum v/c Ratio: 0.97	
Intersection Signal Delay: 38.7	Intersection LOS: D
Intersection Capacity Utilization 84.1%	ICU Level of Service E
Analysis Period (min) 15	

Splits and Phases: 25: 99th Ave & Grand Ave

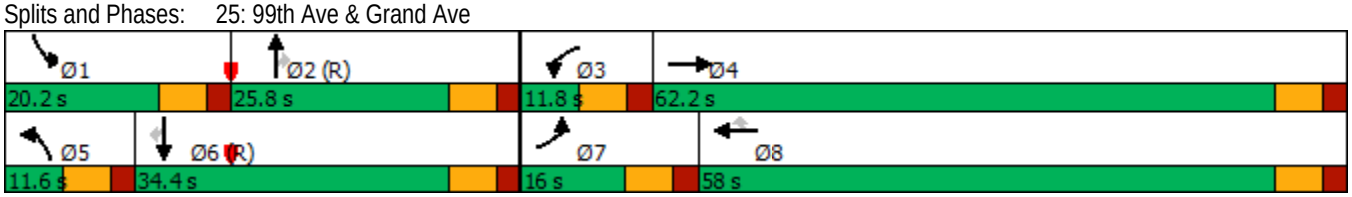

Lane Group	EBT	WBL	WBT
Lane Configurations			
Traffic Volume (vph)	1530	180	2390
Future Volume (vph)	1530	180	2390
Turn Type	NA	Prot	NA
Protected Phases	4	3	8
Permitted Phases			
Detector Phase	4	3	8
Switch Phase			
Minimum Initial (s)	7.0	5.0	7.0
Minimum Split (s)	23.8	10.3	23.8
Total Split (s)	89.0	21.0	110.0
Total Split (%)	80.9%	19.1%	100.0%
Yellow Time (s)	4.3	4.3	4.3
All-Red Time (s)	1.5	1.0	1.5
Lost Time Adjust (s)	0.0	0.0	0.0
Total Lost Time (s)	5.8	5.3	5.8
Lead/Lag	Lag	Lead	
Lead-Lag Optimize?	Yes	Yes	
Recall Mode	None	None	None
Act Effct Green (s)	87.4	11.5	110.0
Actuated g/C Ratio	0.79	0.10	1.00
v/c Ratio	0.60	0.54	0.51
Control Delay	5.0	47.6	3.4
Queue Delay	0.0	0.0	0.0
Total Delay	5.0	47.6	3.4
LOS	A	D	A
Approach Delay	5.0		6.5
Approach LOS	A		A

Intersection Summary	
Cycle Length: 110	
Actuated Cycle Length: 110	
Offset: 100 (91%), Referenced to phase 2: and 6:, Start of Green	
Natural Cycle: 45	
Control Type: Actuated-Coordinated	
Maximum v/c Ratio: 0.60	
Intersection Signal Delay: 5.8	Intersection LOS: A
Intersection Capacity Utilization 58.0%	ICU Level of Service B
Analysis Period (min) 15	

Splits and Phases: 30: SR-101L On Ramp & Grand Ave

Lane Group	EBT	WBT	NBL	NBR
Lane Configurations				
Traffic Volume (vph)	1530	2120	450	140
Future Volume (vph)	1530	2120	450	140
Turn Type	NA	NA	Prot	Perm
Protected Phases	4	8	2	
Permitted Phases				2
Detector Phase	4	8	2	2
Switch Phase				
Minimum Initial (s)	7.0	7.0	7.0	7.0
Minimum Split (s)	24.3	23.8	24.6	24.6
Total Split (s)	69.0	69.0	41.0	41.0
Total Split (%)	62.7%	62.7%	37.3%	37.3%
Yellow Time (s)	4.3	4.3	4.3	4.3
All-Red Time (s)	2.0	1.5	2.3	2.3
Lost Time Adjust (s)	0.0	0.0	0.0	0.0
Total Lost Time (s)	6.3	5.8	6.6	6.6
Lead/Lag				
Lead-Lag Optimize?				
Recall Mode	None	None	C-Max	C-Max
Act Effct Green (s)	55.4	55.9	41.7	41.7
Actuated g/C Ratio	0.50	0.51	0.38	0.38
v/c Ratio	0.65	0.60	0.38	0.25
Control Delay	17.7	19.5	27.1	23.3
Queue Delay	0.2	0.0	0.0	0.0
Total Delay	17.9	19.5	27.1	23.3
LOS	B	B	C	C
Approach Delay	17.9	19.5	26.2	
Approach LOS	B	B	C	

Intersection Summary	
Cycle Length: 110	
Actuated Cycle Length: 110	
Offset: 84 (76%), Referenced to phase 2:NBL and 6:, Start of Green	
Natural Cycle: 55	
Control Type: Actuated-Coordinated	
Maximum v/c Ratio: 0.65	
Intersection Signal Delay: 19.8	Intersection LOS: B
Intersection Capacity Utilization 58.0%	ICU Level of Service B
Analysis Period (min) 15	

Splits and Phases: 34: SR-101L Off Ramp & Grand Ave

Lane Group	EBT	EBR	WBT	WBR	NBT	NBR	SBT	SBR
Lane Configurations								
Traffic Volume (vph)	930	740	1490	420	1140	670	1010	590
Future Volume (vph)	930	740	1490	420	1140	670	1010	590
Turn Type	NA	Perm	NA	Perm	NA	Perm	NA	custom
Protected Phases	4		8		2		6	7
Permitted Phases		4		8		2		6
Detector Phase	4	4	8	8	2	2	6	7
Switch Phase								
Minimum Initial (s)	7.0	7.0	7.0	7.0	7.0	7.0	7.0	7.0
Minimum Split (s)	24.7	24.7	24.3	24.3	24.9	24.9	24.7	13.7
Total Split (s)	64.6	64.6	45.5	45.5	55.4	55.4	55.4	19.1
Total Split (%)	53.8%	53.8%	37.9%	37.9%	46.2%	46.2%	46.2%	15.9%
Yellow Time (s)	4.3	4.3	4.3	4.3	4.3	4.3	4.3	4.3
All-Red Time (s)	2.4	2.4	2.0	2.0	2.6	2.6	2.4	2.4
Lost Time Adjust (s)	0.0	0.0	0.0	0.0	0.0	0.0	0.0	0.0
Total Lost Time (s)	6.7	6.7	6.3	6.3	6.9	6.9	6.7	6.7
Lead/Lag			Lag	Lag				Lead
Lead-Lag Optimize?			Yes	Yes				Yes
Recall Mode	None	None	None	None	C-Max	C-Max	C-Max	None
Act Effct Green (s)	57.9	57.9	41.7	41.7	48.5	48.5	48.7	65.3
Actuated g/C Ratio	0.48	0.48	0.35	0.35	0.40	0.40	0.41	0.54
v/c Ratio	0.41	1.02	0.91	0.65	0.85	1.03	0.76	0.72
Control Delay	20.6	67.1	46.2	20.4	39.2	72.2	32.9	23.5
Queue Delay	0.0	0.0	0.0	0.0	0.0	0.0	0.0	0.0
Total Delay	20.6	67.1	46.2	20.4	39.2	72.2	32.9	23.5
LOS	C	E	D	C	D	E	C	C
Approach Delay	41.2		40.5		51.4		29.4	
Approach LOS	D		D		D		C	

Intersection Summary	
Cycle Length: 120	
Actuated Cycle Length: 120	
Offset: 0 (0%), Referenced to phase 2:NBT and 6:SBT, Start of Green	
Natural Cycle: 110	
Control Type: Actuated-Coordinated	
Maximum v/c Ratio: 1.03	
Intersection Signal Delay: 41.0	Intersection LOS: D
Intersection Capacity Utilization 84.9%	ICU Level of Service E
Analysis Period (min) 15	

Splits and Phases: 37: 91st Ave & Grand Ave

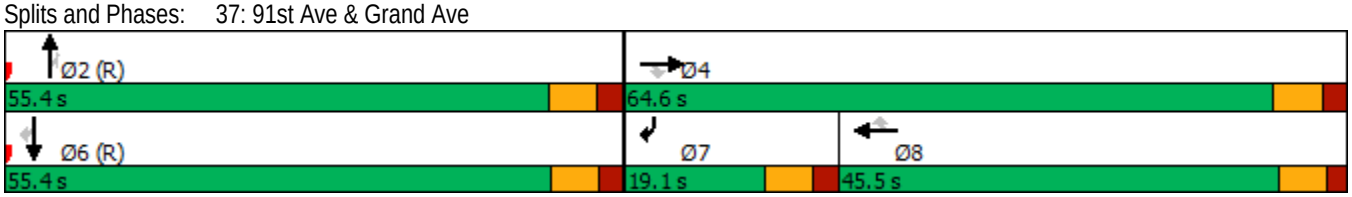

Lane Group	EBL	EBT	WBL	WBT	WBR	NBL	NBT	NBR	SBL	SBT
Lane Configurations										
Traffic Volume (vph)	50	20	550	10	170	40	810	520	260	790
Future Volume (vph)	50	20	550	10	170	40	810	520	260	790
Turn Type	Prot	NA	Prot	NA	Perm	Prot	NA	Perm	Prot	NA
Protected Phases	7	4	3	8		5	2		1	6
Permitted Phases					8			2		
Detector Phase	7	4	3	8	8	5	2	2	1	6
Switch Phase										
Minimum Initial (s)	5.0	7.0	5.0	7.0	7.0	5.0	7.0	7.0	7.0	7.0
Minimum Split (s)	11.3	24.3	11.1	24.1	24.1	11.1	24.1	24.1	12.8	23.8
Total Split (s)	15.3	24.3	30.0	39.0	39.0	13.1	38.7	38.7	27.0	52.6
Total Split (%)	12.8%	20.3%	25.0%	32.5%	32.5%	10.9%	32.3%	32.3%	22.5%	43.8%
Yellow Time (s)	4.3	4.3	4.3	4.3	4.3	4.3	4.3	4.3	4.3	4.3
All-Red Time (s)	2.0	2.0	1.8	1.8	1.8	1.8	1.8	1.8	1.5	1.5
Lost Time Adjust (s)	0.0	0.0	0.0	0.0	0.0	0.0	0.0	0.0	0.0	0.0
Total Lost Time (s)	6.3	6.3	6.1	6.1	6.1	6.1	6.1	6.1	5.8	5.8
Lead/Lag	Lead	Lag	Lead	Lag	Lag	Lead	Lag	Lag	Lead	Lag
Lead-Lag Optimize?	Yes	Yes	Yes	Yes	Yes	Yes	Yes	Yes	Yes	Yes
Recall Mode	None	None	None	None	None	None	C-Max	C-Max	None	C-Max
Act Effct Green (s)	8.0	18.6	23.3	23.3	36.2	6.7	33.1	33.1	20.7	49.4
Actuated g/C Ratio	0.07	0.16	0.19	0.19	0.30	0.06	0.28	0.28	0.17	0.41
v/c Ratio	0.45	0.35	0.93	0.92	0.30	0.43	0.88	0.75	0.92	0.61
Control Delay	65.4	16.0	82.1	80.9	5.5	64.2	56.1	22.2	83.9	30.5
Queue Delay	0.0	0.0	0.0	0.0	0.0	0.0	0.0	0.0	0.0	0.0
Total Delay	65.4	16.0	82.1	80.9	5.5	64.2	56.1	22.2	83.9	30.5
LOS	E	B	F	F	A	E	E	C	F	C
Approach Delay		31.3		63.8			43.5			43.4
Approach LOS		C		E			D			D

Intersection Summary	
Cycle Length: 120	
Actuated Cycle Length: 120	
Offset: 0 (0%), Referenced to phase 2:NBT and 6:SBT, Start of Green	
Natural Cycle: 100	
Control Type: Actuated-Coordinated	
Maximum v/c Ratio: 0.93	
Intersection Signal Delay: 47.3	Intersection LOS: D
Intersection Capacity Utilization 74.0%	ICU Level of Service D
Analysis Period (min) 15	

Splits and Phases: 42: Cactus Rd & 91st Ave

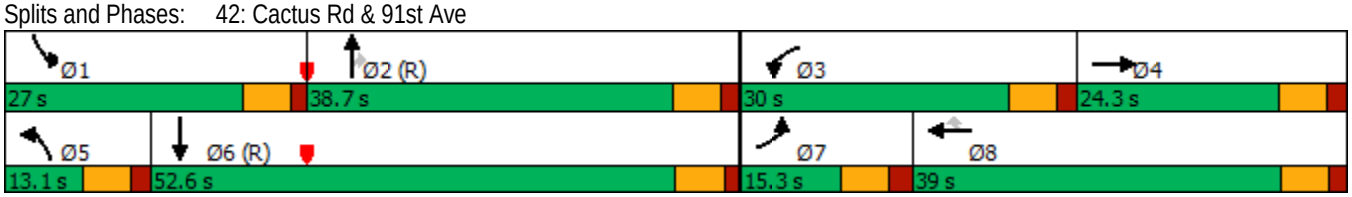

Lane Group	EBL	NBT
Lane Configurations		
Traffic Volume (vph)	1280	530
Future Volume (vph)	1280	530
Turn Type	Prot	NA
Protected Phases	4	2
Permitted Phases		
Detector Phase	4	2
Switch Phase		
Minimum Initial (s)	5.0	5.0
Minimum Split (s)	22.5	22.5
Total Split (s)	36.0	24.0
Total Split (%)	60.0%	40.0%
Yellow Time (s)	3.5	3.5
All-Red Time (s)	1.0	1.0
Lost Time Adjust (s)	0.0	0.0
Total Lost Time (s)	4.5	4.5
Lead/Lag		
Lead-Lag Optimize?		
Recall Mode	None	C-Max
Act Effct Green (s)	28.4	22.6
Actuated g/C Ratio	0.47	0.38
v/c Ratio	0.80	0.43
Control Delay	15.1	16.1
Queue Delay	0.0	0.0
Total Delay	15.1	16.1
LOS	B	B
Approach Delay	15.1	16.1
Approach LOS	B	B

Intersection Summary	
Cycle Length: 60	
Actuated Cycle Length: 60	
Offset: 0 (0%), Referenced to phase 2:NBT and 6:, Start of Green	
Natural Cycle: 55	
Control Type: Actuated-Coordinated	
Maximum v/c Ratio: 0.80	
Intersection Signal Delay: 15.4	Intersection LOS: B
Intersection Capacity Utilization 58.7%	ICU Level of Service B
Analysis Period (min) 15	

Splits and Phases: 4: Southern Loon

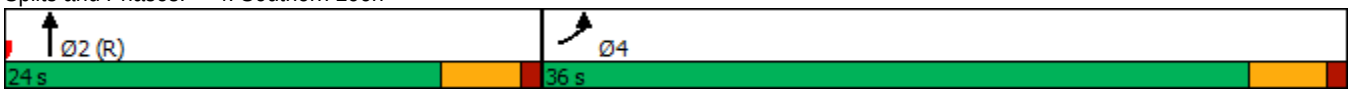

Lane Group	EBT	WBL	WBT	NBL
Lane Configurations				
Traffic Volume (vph)	2460	70	1290	120
Future Volume (vph)	2460	70	1290	120
Turn Type	NA	Prot	NA	Prot
Protected Phases	4	3	8	2
Permitted Phases				
Detector Phase	4	3	8	2
Switch Phase				
Minimum Initial (s)	7.0	7.0	7.0	7.0
Minimum Split (s)	23.8	12.8	23.8	24.6
Total Split (s)	77.0	14.8	91.8	28.2
Total Split (%)	64.2%	12.3%	76.5%	23.5%
Yellow Time (s)	4.3	4.3	4.3	4.3
All-Red Time (s)	1.5	1.5	1.5	2.3
Lost Time Adjust (s)	0.0	0.0	0.0	0.0
Total Lost Time (s)	5.8	5.8	5.8	6.6
Lead/Lag	Lag	Lead		
Lead-Lag Optimize?	Yes	Yes		
Recall Mode	None	None	None	C-Max
Act Effct Green (s)	71.4	8.6	83.2	24.4
Actuated g/C Ratio	0.60	0.07	0.69	0.20
v/c Ratio	0.94	0.61	0.41	0.65
Control Delay	29.7	75.0	8.1	48.5
Queue Delay	0.0	0.0	0.0	0.0
Total Delay	29.7	75.0	8.1	48.5
LOS	C	E	A	D
Approach Delay	29.7		11.5	48.5
Approach LOS	C		B	D

Intersection Summary	
Cycle Length: 120	
Actuated Cycle Length: 120	
Offset: 3 (3%), Referenced to phase 2:NBL and 6:, Start of Green	
Natural Cycle: 90	
Control Type: Actuated-Coordinated	
Maximum v/c Ratio: 0.94	
Intersection Signal Delay: 24.7	Intersection LOS: C
Intersection Capacity Utilization 81.3%	ICU Level of Service D
Analysis Period (min) 15	

Splits and Phases: 7: 113th Ave & Grand Ave

Lane Group	EBL	EBT	WBL	WBT	NBL	NBT	NBR	SBL	SBT	SBR
Lane Configurations										
Traffic Volume (vph)	170	2430	110	1220	100	160	190	50	110	60
Future Volume (vph)	170	2430	110	1220	100	160	190	50	110	60
Turn Type	Prot	NA	Prot	NA	Prot	NA	Perm	Prot	NA	pm+ov
Protected Phases	7	4	3	8	5	2		1	6	7
Permitted Phases							2			6
Detector Phase	7	4	3	8	5	2	2	1	6	7
Switch Phase										
Minimum Initial (s)	7.0	7.0	7.0	7.0	7.0	7.0	7.0	7.0	7.0	7.0
Minimum Split (s)	13.7	24.7	13.3	24.3	24.6	24.6	24.6	24.3	24.3	13.7
Total Split (s)	20.6	86.0	13.6	79.0	24.8	26.0	26.0	24.4	25.6	20.6
Total Split (%)	13.7%	57.3%	9.1%	52.7%	16.5%	17.3%	17.3%	16.3%	17.1%	13.7%
Yellow Time (s)	4.3	4.3	4.3	4.3	4.3	4.3	4.3	4.3	4.3	4.3
All-Red Time (s)	2.4	2.4	2.0	2.0	2.3	2.3	2.3	2.0	2.0	2.4
Lost Time Adjust (s)	0.0	0.0	0.0	0.0	0.0	0.0	0.0	0.0	0.0	0.0
Total Lost Time (s)	6.7	6.7	6.3	6.3	6.6	6.6	6.6	6.3	6.3	6.7
Lead/Lag	Lead	Lag	Lead	Lag	Lead	Lag	Lag	Lead	Lag	Lead
Lead-Lag Optimize?	Yes	Yes	Yes	Yes	Yes	Yes	Yes	Yes	Yes	Yes
Recall Mode	None	None	None	None	Max	C-Max	C-Max	Max	Max	None
Act Effct Green (s)	12.5	79.3	7.3	74.1	18.2	19.4	19.4	18.1	19.3	38.1
Actuated g/C Ratio	0.08	0.53	0.05	0.49	0.12	0.13	0.13	0.12	0.13	0.25
v/c Ratio	0.64	0.99	0.74	0.56	0.26	0.38	0.55	0.25	0.50	0.14
Control Delay	76.9	50.0	96.1	27.8	61.7	62.5	15.3	63.2	68.6	7.8
Queue Delay	0.0	1.5	0.0	0.0	0.0	0.0	0.0	0.0	0.0	0.0
Total Delay	76.9	51.5	96.1	27.8	61.7	62.5	15.3	63.2	68.6	7.8
LOS	E	D	F	C	E	E	B	E	E	A
Approach Delay		53.1		33.3		42.4			50.8	
Approach LOS		D		C		D			D	

Intersection Summary	
Cycle Length: 150	
Actuated Cycle Length: 150	
Offset: 0 (0%), Referenced to phase 2:NBT, Start of Green	
Natural Cycle: 140	
Control Type: Actuated-Coordinated	
Maximum v/c Ratio: 0.99	
Intersection Signal Delay: 46.2	Intersection LOS: D
Intersection Capacity Utilization 86.9%	ICU Level of Service E
Analysis Period (min) 15	

Splits and Phases: 11: 111th Ave & Grand Ave

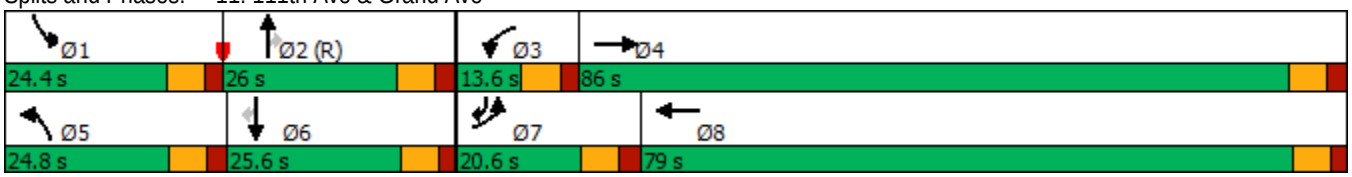

Lane Group	EBL	EBT	WBL	WBT	NBL	NBT	NBR	SBL	SBT
Lane Configurations									
Traffic Volume (vph)	190	2470	70	1290	90	220	90	60	220
Future Volume (vph)	190	2470	70	1290	90	220	90	60	220
Turn Type	Prot	NA	Prot	NA	Prot	NA	Perm	Prot	NA
Protected Phases	7	4	3	8	5	2		1	6
Permitted Phases							2		
Detector Phase	7	4	3	8	5	2	2	1	6
Switch Phase									
Minimum Initial (s)	7.0	7.0	5.0	7.0	5.0	7.0	7.0	5.0	7.0
Minimum Split (s)	14.3	25.3	12.0	25.0	11.7	24.7	24.7	11.5	24.5
Total Split (s)	28.6	67.6	12.0	51.0	14.2	27.4	27.4	13.0	26.2
Total Split (%)	23.8%	56.3%	10.0%	42.5%	11.8%	22.8%	22.8%	10.8%	21.8%
Yellow Time (s)	4.3	4.3	4.3	4.3	4.3	4.3	4.3	4.3	4.3
All-Red Time (s)	3.0	3.0	2.7	2.7	2.4	2.4	2.4	2.2	2.2
Lost Time Adjust (s)	0.0	0.0	0.0	0.0	0.0	0.0	0.0	0.0	0.0
Total Lost Time (s)	7.3	7.3	7.0	7.0	6.7	6.7	6.7	6.5	6.5
Lead/Lag	Lead	Lag	Lead	Lag	Lead	Lag	Lag	Lead	Lag
Lead-Lag Optimize?	Yes	Yes	Yes	Yes	Yes	Yes	Yes	Yes	Yes
Recall Mode	None	None	None	None	None	C-Max	C-Max	None	C-Max
Act Effct Green (s)	18.2	60.3	5.0	47.1	7.5	23.3	23.3	6.5	19.7
Actuated g/C Ratio	0.15	0.50	0.04	0.39	0.06	0.19	0.19	0.05	0.16
v/c Ratio	0.77	1.07	1.06	0.76	0.88	0.34	0.20	0.68	0.55
Control Delay	68.0	68.1	164.3	16.9	114.5	44.6	0.9	88.8	44.6
Queue Delay	0.0	0.0	0.0	0.0	0.0	0.0	0.0	0.0	0.0
Total Delay	68.0	68.1	164.3	16.9	114.5	44.6	0.9	88.8	44.6
LOS	E	E	F	B	F	D	A	F	D
Approach Delay		68.1		24.2		50.5			52.0
Approach LOS		E		C		D			D

Intersection Summary	
Cycle Length: 120	
Actuated Cycle Length: 120	
Offset: 100 (83%), Referenced to phase 2:NBT and 6:SBT, Start of Green	
Natural Cycle: 120	
Control Type: Actuated-Coordinated	
Maximum v/c Ratio: 1.07	
Intersection Signal Delay: 52.6	Intersection LOS: D
Intersection Capacity Utilization 89.1%	ICU Level of Service E
Analysis Period (min) 15	

Splits and Phases: 16: 107th Ave & Grand Ave

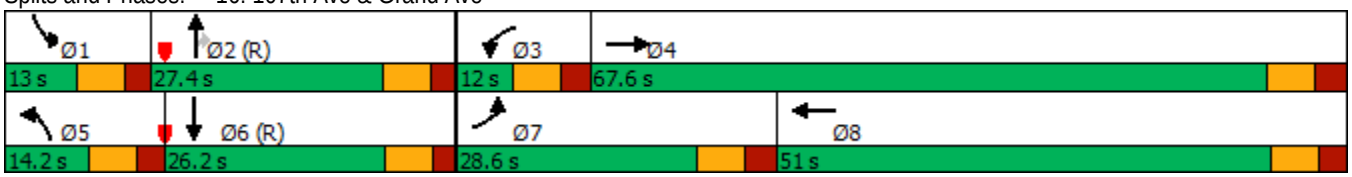

Lane Group	EBL	EBT	WBL	WBT	NBL	NBT	NBR	SBL	SBT
Lane Configurations									
Traffic Volume (vph)	260	2260	40	1310	40	260	40	60	200
Future Volume (vph)	260	2260	40	1310	40	260	40	60	200
Turn Type	Prot	NA	Prot	NA	Prot	NA	Perm	Prot	NA
Protected Phases	7	4	3	8	5	2		1	6
Permitted Phases							2		
Detector Phase	7	4	3	8	5	2	2	1	6
Switch Phase									
Minimum Initial (s)	7.0	7.0	7.0	7.0	5.0	7.0	7.0	5.0	7.0
Minimum Split (s)	13.1	64.1	13.4	24.4	11.5	24.5	24.5	11.5	24.5
Total Split (s)	27.2	66.0	13.4	52.2	12.1	28.6	28.6	12.0	28.5
Total Split (%)	22.7%	55.0%	11.2%	43.5%	10.1%	23.8%	23.8%	10.0%	23.8%
Yellow Time (s)	4.3	4.3	4.3	4.3	4.3	4.3	4.3	4.3	4.3
All-Red Time (s)	1.8	1.8	2.1	2.1	2.2	2.2	2.2	2.2	2.2
Lost Time Adjust (s)	0.0	0.0	0.0	0.0	0.0	0.0	0.0	0.0	0.0
Total Lost Time (s)	6.1	6.1	6.4	6.4	6.5	6.5	6.5	6.5	6.5
Lead/Lag	Lead	Lag	Lead	Lag	Lead	Lag	Lag	Lead	Lag
Lead-Lag Optimize?	Yes	Yes	Yes	Yes	Yes	Yes	Yes	Yes	Yes
Recall Mode	None	None	None	None	None	C-Max	C-Max	None	C-Max
Act Effct Green (s)	20.7	61.7	7.0	45.3	5.6	22.7	22.7	5.8	25.3
Actuated g/C Ratio	0.17	0.51	0.06	0.38	0.05	0.19	0.19	0.05	0.21
v/c Ratio	0.93	0.95	0.43	0.91	0.52	0.80	0.09	0.76	0.44
Control Delay	74.2	6.2	79.6	15.4	78.5	64.9	0.4	103.7	34.7
Queue Delay	0.0	0.0	0.0	0.0	0.0	0.0	0.0	0.0	0.0
Total Delay	74.2	6.2	79.6	15.4	78.5	64.9	0.4	103.7	34.7
LOS	E	A	E	B	E	E	A	F	C
Approach Delay		13.1		16.9		59.0			45.8
Approach LOS		B		B		E			D

Intersection Summary	
Cycle Length: 120	
Actuated Cycle Length: 120	
Offset: 36 (30%), Referenced to phase 2:NBT and 6:SBT, Start of Green	
Natural Cycle: 115	
Control Type: Actuated-Coordinated	
Maximum v/c Ratio: 0.95	
Intersection Signal Delay: 20.1	Intersection LOS: C
Intersection Capacity Utilization 89.3%	ICU Level of Service E
Analysis Period (min) 15	

Splits and Phases: 20: 103rd Ave & Grand Ave

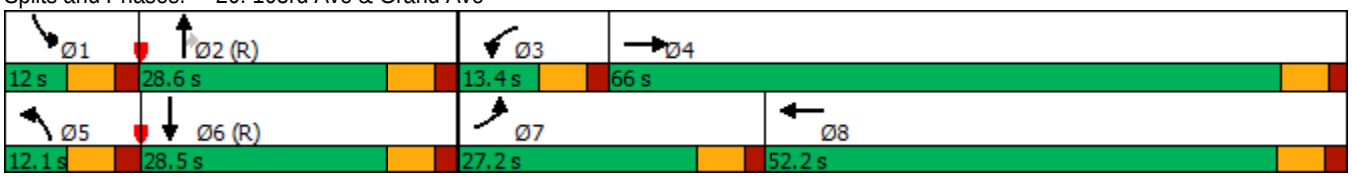

Lane Group	EBL	EBT	WBL	WBT	WBR	NBL	NBT	NBR	SBL	SBT	SBR
Lane Configurations											
Traffic Volume (vph)	430	1950	20	1400	580	70	520	40	280	230	190
Future Volume (vph)	430	1950	20	1400	580	70	520	40	280	230	190
Turn Type	Prot	NA	Prot	NA	Perm	Prot	NA	Perm	Prot	NA	Perm
Protected Phases	7	4	3	8		5	2		1	6	
Permitted Phases					8			2			6
Detector Phase	7	4	3	8	8	5	2	2	1	6	6
Switch Phase											
Minimum Initial (s)	7.0	7.0	7.0	7.0	7.0	5.0	7.0	7.0	5.0	7.0	7.0
Minimum Split (s)	13.6	24.6	13.6	24.6	24.6	11.4	24.4	24.4	11.4	24.4	24.4
Total Split (s)	24.2	59.2	13.6	48.6	48.6	13.0	28.8	28.8	18.4	34.2	34.2
Total Split (%)	20.2%	49.3%	11.3%	40.5%	40.5%	10.8%	24.0%	24.0%	15.3%	28.5%	28.5%
Yellow Time (s)	4.3	4.3	4.3	4.3	4.3	4.3	4.3	4.3	4.3	4.3	4.3
All-Red Time (s)	2.3	2.3	2.3	2.3	2.3	2.1	2.1	2.1	2.1	2.1	2.1
Lost Time Adjust (s)	0.0	0.0	0.0	0.0	0.0	0.0	0.0	0.0	0.0	0.0	0.0
Total Lost Time (s)	6.6	6.6	6.6	6.6	6.6	6.4	6.4	6.4	6.4	6.4	6.4
Lead/Lag	Lead	Lag	Lead	Lag	Lag	Lead	Lag	Lag	Lead	Lag	Lag
Lead-Lag Optimize?	Yes	Yes	Yes	Yes	Yes	Yes	Yes	Yes	Yes	Yes	Yes
Recall Mode	None	None	None	None	None	None	C-Max	C-Max	None	C-Max	C-Max
Act Effct Green (s)	17.6	58.0	7.0	42.0	42.0	6.5	22.4	22.4	12.0	30.4	30.4
Actuated g/C Ratio	0.15	0.48	0.06	0.35	0.35	0.05	0.19	0.19	0.10	0.25	0.25
v/c Ratio	0.94	0.89	0.11	0.88	0.94	0.42	0.87	0.09	0.91	0.29	0.38
Control Delay	79.4	10.9	55.0	43.8	48.2	62.0	61.9	0.4	83.6	38.2	7.0
Queue Delay	0.0	0.0	0.0	0.0	0.0	0.0	0.0	0.0	0.0	0.0	0.0
Total Delay	79.4	10.9	55.0	43.8	48.2	62.0	61.9	0.4	83.6	38.2	7.0
LOS	E	B	D	D	D	E	E	A	F	D	A
Approach Delay		23.1		45.2			58.0			47.9	
Approach LOS		C		D			E			D	

Intersection Summary	
Cycle Length: 120	
Actuated Cycle Length: 120	
Offset: 108 (90%), Referenced to phase 2:NBT and 6:SBT, Start of Green	
Natural Cycle: 110	
Control Type: Actuated-Coordinated	
Maximum v/c Ratio: 0.94	
Intersection Signal Delay: 37.6	Intersection LOS: D
Intersection Capacity Utilization 88.4%	ICU Level of Service E
Analysis Period (min) 15	

Splits and Phases: 25: 99th Ave & Grand Ave

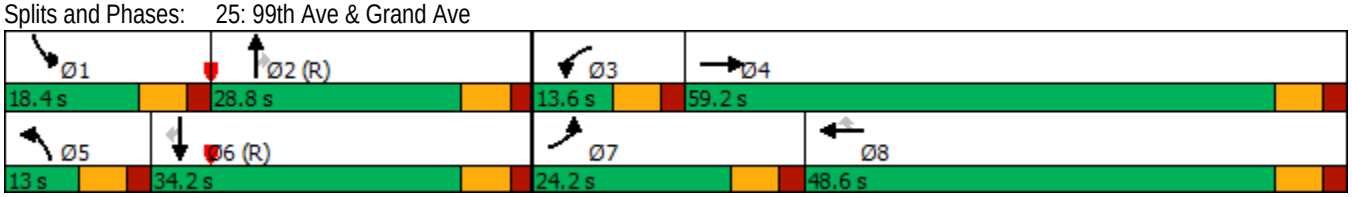

Lane Group	EBT	WBL	WBT
Lane Configurations			
Traffic Volume (vph)	1850	60	2020
Future Volume (vph)	1850	60	2020
Turn Type	NA	Prot	NA
Protected Phases	4	3	8
Permitted Phases			
Detector Phase	4	3	8
Switch Phase			
Minimum Initial (s)	7.0	7.0	7.0
Minimum Split (s)	23.8	12.8	23.8
Total Split (s)	94.0	16.0	110.0
Total Split (%)	85.5%	14.5%	100.0%
Yellow Time (s)	4.3	4.3	4.3
All-Red Time (s)	1.5	1.5	1.5
Lost Time Adjust (s)	0.0	0.0	0.0
Total Lost Time (s)	5.8	5.8	5.8
Lead/Lag	Lag	Lead	
Lead-Lag Optimize?	Yes	Yes	
Recall Mode	None	None	None
Act Effct Green (s)	94.3	7.8	110.0
Actuated g/C Ratio	0.86	0.07	1.00
v/c Ratio	0.58	0.27	0.44
Control Delay	3.4	53.6	1.7
Queue Delay	0.1	0.0	0.0
Total Delay	3.5	53.6	1.7
LOS	A	D	A
Approach Delay	3.5		3.1
Approach LOS	A		A

Intersection Summary	
Cycle Length: 110	
Actuated Cycle Length: 110	
Offset: 5 (5%), Referenced to phase 2: and 6:, Start of Green	
Natural Cycle: 50	
Control Type: Actuated-Coordinated	
Maximum v/c Ratio: 0.58	
Intersection Signal Delay: 3.3	Intersection LOS: A
Intersection Capacity Utilization 95.4%	ICU Level of Service F
Analysis Period (min) 15	

Splits and Phases: 30: SR-101L On Ramp & Grand Ave

Lane Group	EBT	WBT	NBL	NBR
Lane Configurations				
Traffic Volume (vph)	1850	1430	650	100
Future Volume (vph)	1850	1430	650	100
Turn Type	NA	NA	Prot	Perm
Protected Phases	4	8	2	
Permitted Phases				2
Detector Phase	4	8	2	2
Switch Phase				
Minimum Initial (s)	7.0	7.0	7.0	7.0
Minimum Split (s)	24.3	23.8	24.6	24.6
Total Split (s)	66.0	66.0	44.0	44.0
Total Split (%)	60.0%	60.0%	40.0%	40.0%
Yellow Time (s)	4.3	4.3	4.3	4.3
All-Red Time (s)	2.0	1.5	2.3	2.3
Lost Time Adjust (s)	0.0	0.0	0.0	0.0
Total Lost Time (s)	6.3	5.8	6.6	6.6
Lead/Lag				
Lead-Lag Optimize?				
Recall Mode	None	None	C-Max	C-Max
Act Effct Green (s)	56.9	57.4	40.2	40.2
Actuated g/C Ratio	0.52	0.52	0.37	0.37
v/c Ratio	0.76	0.40	0.57	0.19
Control Delay	20.8	16.1	31.0	24.7
Queue Delay	0.4	0.0	0.0	0.0
Total Delay	21.2	16.1	31.0	24.7
LOS	C	B	C	C
Approach Delay	21.2	16.1	30.1	
Approach LOS	C	B	C	

Intersection Summary	
Cycle Length: 110	
Actuated Cycle Length: 110	
Offset: 92 (84%), Referenced to phase 2:NBL and 6:, Start of Green	
Natural Cycle: 60	
Control Type: Actuated-Coordinated	
Maximum v/c Ratio: 0.76	
Intersection Signal Delay: 21.1	Intersection LOS: C
Intersection Capacity Utilization 95.4%	ICU Level of Service F
Analysis Period (min) 15	

Splits and Phases: 34: SR-101L Off Ramp & Grand Ave

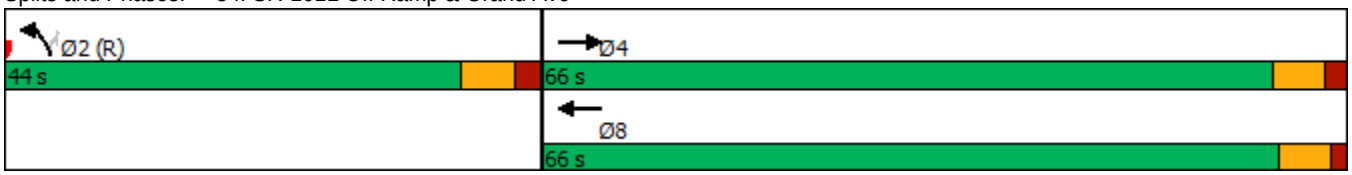

Lane Group	EBL	EBT	WBL	WBT	WBR	NBL	NBT	SBL	SBT	SBR
Lane Configurations										
Traffic Volume (vph)	640	1240	40	650	220	150	410	200	150	630
Future Volume (vph)	640	1240	40	650	220	150	410	200	150	630
Turn Type	Prot	NA	Prot	NA	Perm	Prot	NA	Prot	NA	pm+ov
Protected Phases	7	4	3	8		5	2	1	6	7
Permitted Phases					8					6
Detector Phase	7	4	3	8	8	5	2	1	6	7
Switch Phase										
Minimum Initial (s)	7.0	7.0	7.0	7.0	7.0	5.0	7.0	5.0	7.0	7.0
Minimum Split (s)	13.7	24.7	13.3	24.3	24.3	11.9	24.9	11.7	26.5	13.7
Total Split (s)	41.0	54.5	13.5	27.0	27.0	23.0	34.0	18.0	29.0	41.0
Total Split (%)	34.2%	45.4%	11.3%	22.5%	22.5%	19.2%	28.3%	15.0%	24.2%	34.2%
Yellow Time (s)	4.3	4.3	4.3	4.3	4.3	4.3	4.3	4.3	4.3	4.3
All-Red Time (s)	2.4	2.4	2.0	2.0	2.0	2.6	2.6	2.4	2.4	2.4
Lost Time Adjust (s)	0.0	0.0	0.0	0.0	0.0	0.0	0.0	0.0	0.0	0.0
Total Lost Time (s)	6.7	6.7	6.3	6.3	6.3	6.9	6.9	6.7	6.7	6.7
Lead/Lag	Lead	Lag	Lead	Lag	Lag	Lead	Lag	Lead	Lag	Lead
Lead-Lag Optimize?	Yes	Yes	Yes	Yes	Yes	Yes	Yes	Yes	Yes	Yes
Recall Mode	None	None	None	None	None	None	C-Max	None	C-Max	None
Act Effct Green (s)	30.7	47.1	7.1	20.9	20.9	14.6	30.8	11.0	27.2	64.6
Actuated g/C Ratio	0.26	0.39	0.06	0.17	0.17	0.12	0.26	0.09	0.23	0.54
v/c Ratio	0.79	0.72	0.41	0.81	0.51	0.77	0.59	0.70	0.39	0.77
Control Delay	48.6	33.1	66.8	55.6	9.5	73.7	42.1	55.7	48.5	40.9
Queue Delay	0.0	0.0	0.0	0.0	0.0	0.0	0.0	0.0	0.0	0.0
Total Delay	48.6	33.1	66.8	55.6	9.5	73.7	42.1	55.7	48.5	40.9
LOS	D	C	E	E	A	E	D	E	D	D
Approach Delay		38.2		45.0			49.6		45.1	
Approach LOS		D		D			D		D	

Intersection Summary	
Cycle Length: 120	
Actuated Cycle Length: 120	
Offset: 89 (74%), Referenced to phase 2:NBT and 6:SBT, Start of Green	
Natural Cycle: 90	
Control Type: Actuated-Coordinated	
Maximum v/c Ratio: 0.81	
Intersection Signal Delay: 42.7	Intersection LOS: D
Intersection Capacity Utilization 76.5%	ICU Level of Service D
Analysis Period (min) 15	

Splits and Phases: 37: 91st Ave & Grand Ave

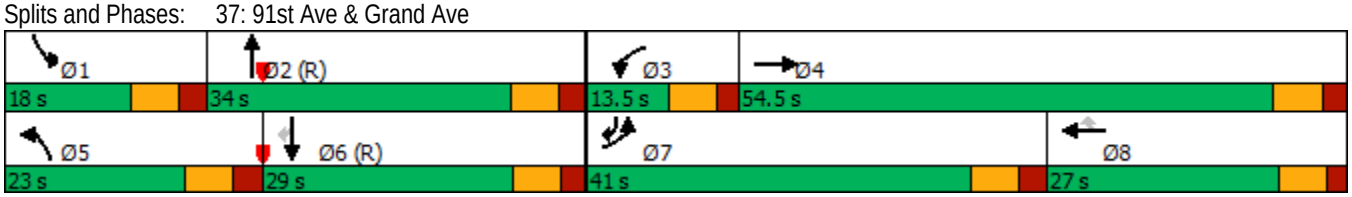

Lane Group	EBL	EBT	WBL	WBT	WBR	NBL	NBT	NBR	SBL	SBT
Lane Configurations										
Traffic Volume (vph)	80	20	150	10	100	110	1060	100	60	680
Future Volume (vph)	80	20	150	10	100	110	1060	100	60	680
Turn Type	Prot	NA	Prot	NA	Perm	Prot	NA	Perm	Prot	NA
Protected Phases	7	4	3	8		5	2		1	6
Permitted Phases					8			2		
Detector Phase	7	4	3	8	8	5	2	2	1	6
Switch Phase										
Minimum Initial (s)	5.0	7.0	5.0	7.0	7.0	5.0	7.0	7.0	7.0	7.0
Minimum Split (s)	11.3	24.3	11.1	24.1	24.1	11.1	24.1	24.1	12.8	23.8
Total Split (s)	19.0	24.3	19.3	24.6	24.6	22.0	60.4	60.4	16.0	54.4
Total Split (%)	15.8%	20.3%	16.1%	20.5%	20.5%	18.3%	50.3%	50.3%	13.3%	45.3%
Yellow Time (s)	4.3	4.3	4.3	4.3	4.3	4.3	4.3	4.3	4.3	4.3
All-Red Time (s)	2.0	2.0	1.8	1.8	1.8	1.8	1.8	1.8	1.5	1.5
Lost Time Adjust (s)	0.0	0.0	0.0	0.0	0.0	0.0	0.0	0.0	0.0	0.0
Total Lost Time (s)	6.3	6.3	6.1	6.1	6.1	6.1	6.1	6.1	5.8	5.8
Lead/Lag	Lead	Lag	Lead	Lag	Lag	Lead	Lag	Lag	Lead	Lag
Lead-Lag Optimize?	Yes	Yes	Yes	Yes	Yes	Yes	Yes	Yes	Yes	Yes
Recall Mode	None	None	None	None	None	None	C-Max	C-Max	None	C-Max
Act Effct Green (s)	10.6	22.9	10.9	9.5	20.6	12.9	58.0	58.0	9.1	51.6
Actuated g/C Ratio	0.09	0.19	0.09	0.08	0.17	0.11	0.48	0.48	0.08	0.43
v/c Ratio	0.56	0.42	0.58	0.67	0.29	0.64	0.68	0.13	0.49	0.56
Control Delay	66.2	13.0	67.2	75.8	5.5	72.0	10.1	0.9	65.7	27.5
Queue Delay	0.0	0.0	0.0	0.0	0.0	0.0	0.0	0.0	0.0	0.0
Total Delay	66.2	13.0	67.2	75.8	5.5	72.0	10.1	0.9	65.7	27.5
LOS	E	B	E	E	A	E	B	A	E	C
Approach Delay		30.0		46.1			14.8			30.3
Approach LOS		C		D			B			C

Intersection Summary	
Cycle Length: 120	
Actuated Cycle Length: 120	
Offset: 0 (0%), Referenced to phase 2:NBT and 6:SBT, Start of Green	
Natural Cycle: 90	
Control Type: Actuated-Coordinated	
Maximum v/c Ratio: 0.68	
Intersection Signal Delay: 24.3	Intersection LOS: C
Intersection Capacity Utilization 71.5%	ICU Level of Service C
Analysis Period (min) 15	

Splits and Phases: 42: Cactus Rd & 91st Ave

Lane Group	EBT	WBL	WBT	NBL
Lane Configurations				
Traffic Volume (vph)	1790	70	2840	240
Future Volume (vph)	1790	70	2840	240
Turn Type	NA	Prot	NA	Prot
Protected Phases	4	3	8	2
Permitted Phases				
Detector Phase	4	3	8	2
Switch Phase				
Minimum Initial (s)	7.0	5.0	7.0	7.0
Minimum Split (s)	23.8	10.3	23.8	24.6
Total Split (s)	63.2	12.8	76.0	34.0
Total Split (%)	57.5%	11.6%	69.1%	30.9%
Yellow Time (s)	4.3	4.3	4.3	4.3
All-Red Time (s)	1.5	1.0	1.5	2.3
Lost Time Adjust (s)	0.0	0.0	0.0	0.0
Total Lost Time (s)	5.8	5.3	5.8	6.6
Lead/Lag	Lag	Lead		
Lead-Lag Optimize?	Yes	Yes		
Recall Mode	None	None	None	C-Max
Act Effct Green (s)	60.0	7.3	70.2	27.4
Actuated g/C Ratio	0.55	0.07	0.64	0.25
v/c Ratio	0.76	0.64	0.94	0.83
Control Delay	22.1	75.0	25.6	53.9
Queue Delay	0.0	0.0	0.0	0.0
Total Delay	22.1	75.0	25.6	53.9
LOS	C	E	C	D
Approach Delay	22.1		26.8	53.9
Approach LOS	C		C	D

Intersection Summary	
Cycle Length: 110	
Actuated Cycle Length: 110	
Offset: 0 (0%), Referenced to phase 2:NBL and 6:, Start of Green	
Natural Cycle: 90	
Control Type: Actuated-Coordinated	
Maximum v/c Ratio: 0.94	
Intersection Signal Delay: 26.8	Intersection LOS: C
Intersection Capacity Utilization 84.6%	ICU Level of Service E
Analysis Period (min) 15	

Splits and Phases: 7: 113th Ave & Grand Ave

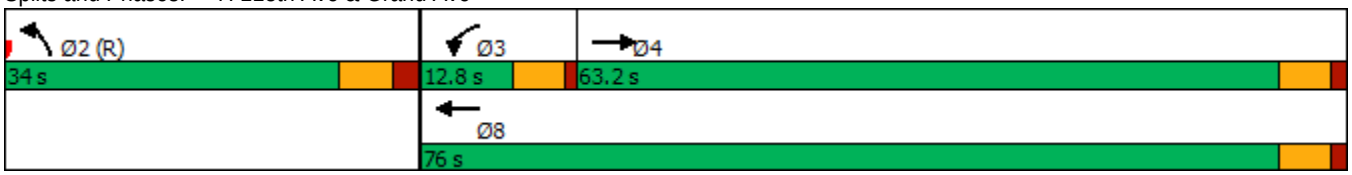

Lane Group	EBL	EBT	WBL	WBT	NBL	NBT	NBR	SBL	SBT	SBR
Lane Configurations										
Traffic Volume (vph)	90	1750	130	2400	210	170	190	60	150	310
Future Volume (vph)	90	1750	130	2400	210	170	190	60	150	310
Turn Type	Prot	NA	Prot	NA	Prot	NA	Perm	Prot	NA	pm+ov
Protected Phases	7	4	3	8	5	2		1	6	7
Permitted Phases							2			6
Detector Phase	7	4	3	8	5	2	2	1	6	7
Switch Phase										
Minimum Initial (s)	7.0	7.0	7.0	7.0	7.0	7.0	7.0	7.0	7.0	7.0
Minimum Split (s)	13.7	24.7	13.3	24.3	24.6	24.6	24.6	24.3	24.3	13.7
Total Split (s)	16.6	82.2	17.4	83.0	24.6	26.1	26.1	24.3	25.8	16.6
Total Split (%)	11.1%	54.8%	11.6%	55.3%	16.4%	17.4%	17.4%	16.2%	17.2%	11.1%
Yellow Time (s)	4.3	4.3	4.3	4.3	4.3	4.3	4.3	4.3	4.3	4.3
All-Red Time (s)	2.4	2.4	2.0	2.0	2.3	2.3	2.3	2.0	2.0	2.4
Lost Time Adjust (s)	0.0	0.0	0.0	0.0	0.0	0.0	0.0	0.0	0.0	0.0
Total Lost Time (s)	6.7	6.7	6.3	6.3	6.6	6.6	6.6	6.3	6.3	6.7
Lead/Lag	Lead	Lag	Lead	Lag	Lead	Lag	Lag	Lead	Lag	Lead
Lead-Lag Optimize?	Yes	Yes	Yes	Yes	Yes	Yes	Yes	Yes	Yes	Yes
Recall Mode	None	None	None	None	Max	C-Max	C-Max	Max	Max	None
Act Effct Green (s)	9.0	76.3	10.3	77.6	18.0	19.5	19.5	18.0	19.5	34.8
Actuated g/C Ratio	0.06	0.51	0.07	0.52	0.12	0.13	0.13	0.12	0.13	0.23
v/c Ratio	0.47	0.77	0.59	0.99	0.55	0.40	0.54	0.30	0.66	0.78
Control Delay	75.5	32.2	78.2	51.3	67.9	62.8	13.5	64.5	75.8	55.6
Queue Delay	0.0	0.0	0.0	0.0	0.0	0.0	0.0	0.0	0.0	0.0
Total Delay	75.5	32.2	78.2	51.3	67.9	62.8	13.5	64.5	75.8	55.6
LOS	E	C	E	D	E	E	B	E	E	E
Approach Delay		34.2		52.7		48.2			62.5	
Approach LOS		C		D		D			E	

Intersection Summary	
Cycle Length: 150	
Actuated Cycle Length: 150	
Offset: 0 (0%), Referenced to phase 2:NBT, Start of Green	
Natural Cycle: 150	
Control Type: Actuated-Coordinated	
Maximum v/c Ratio: 0.99	
Intersection Signal Delay: 46.8	Intersection LOS: D
Intersection Capacity Utilization 88.3%	ICU Level of Service E
Analysis Period (min) 15	

Splits and Phases: 11: 111th Ave & Grand Ave

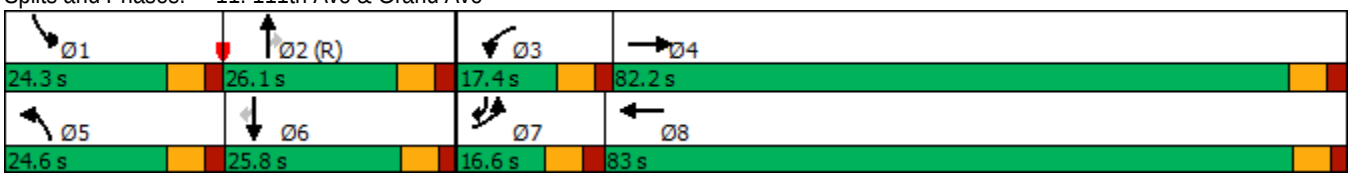

Lane Group	EBL	EBT	WBL	WBT	NBL	NBT	NBR	SBL	SBT
Lane Configurations									
Traffic Volume (vph)	80	1840	90	2200	210	230	70	100	290
Future Volume (vph)	80	1840	90	2200	210	230	70	100	290
Turn Type	Prot	NA	Prot	NA	Prot	NA	Perm	Prot	NA
Protected Phases	7	4	3	8	5	2		1	6
Permitted Phases							2		
Detector Phase	7	4	3	8	5	2	2	1	6
Switch Phase									
Minimum Initial (s)	7.0	7.0	7.0	7.0	5.0	7.0	7.0	5.0	7.0
Minimum Split (s)	14.3	25.3	14.0	25.0	11.7	24.7	24.7	11.5	24.5
Total Split (s)	14.6	58.6	14.0	58.0	22.2	26.3	26.3	21.1	25.2
Total Split (%)	12.2%	48.8%	11.7%	48.3%	18.5%	21.9%	21.9%	17.6%	21.0%
Yellow Time (s)	4.3	4.3	4.3	4.3	4.3	4.3	4.3	4.3	4.3
All-Red Time (s)	3.0	3.0	2.7	2.7	2.4	2.4	2.4	2.2	2.2
Lost Time Adjust (s)	0.0	0.0	0.0	0.0	0.0	0.0	0.0	0.0	0.0
Total Lost Time (s)	7.3	7.3	7.0	7.0	6.7	6.7	6.7	6.5	6.5
Lead/Lag	Lead	Lag	Lead	Lag	Lead	Lag	Lag	Lead	Lag
Lead-Lag Optimize?	Yes	Yes	Yes	Yes	Yes	Yes	Yes	Yes	Yes
Recall Mode	None	None	None	None	None	C-Max	C-Max	None	C-Max
Act Effct Green (s)	7.3	51.3	7.0	51.0	15.5	22.2	22.2	12.0	18.7
Actuated g/C Ratio	0.06	0.43	0.06	0.42	0.13	0.18	0.18	0.10	0.16
v/c Ratio	0.81	0.95	0.94	1.12	0.99	0.38	0.18	0.61	0.89
Control Delay	103.2	43.8	90.9	68.9	109.7	45.5	0.9	65.5	56.3
Queue Delay	0.0	0.0	0.0	0.0	0.0	0.0	0.0	0.0	0.0
Total Delay	103.2	43.8	90.9	68.9	109.7	45.5	0.9	65.5	56.3
LOS	F	D	F	E	F	D	A	E	E
Approach Delay		46.2		69.7		65.8			57.7
Approach LOS		D		E		E			E

Intersection Summary	
Cycle Length: 120	
Actuated Cycle Length: 120	
Offset: 96 (80%), Referenced to phase 2:NBT and 6:SBT, Start of Green	
Natural Cycle: 150	
Control Type: Actuated-Coordinated	
Maximum v/c Ratio: 1.12	
Intersection Signal Delay: 59.5	Intersection LOS: E
Intersection Capacity Utilization 99.4%	ICU Level of Service F
Analysis Period (min) 15	

Splits and Phases: 16: 107th Ave & Grand Ave

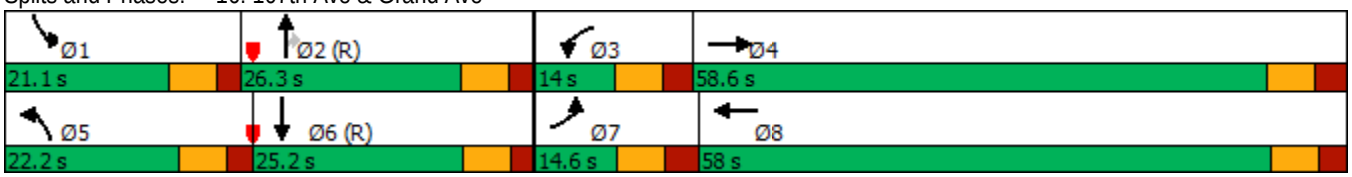

Lane Group	EBL	EBT	WBL	WBT	NBL	NBT	NBR	SBL	SBT
Lane Configurations									
Traffic Volume (vph)	120	1750	30	2090	70	200	60	200	250
Future Volume (vph)	120	1750	30	2090	70	200	60	200	250
Turn Type	Prot	NA	Prot	NA	Prot	NA	Perm	Prot	NA
Protected Phases	7	4	3	8	5	2		1	6
Permitted Phases							2		
Detector Phase	7	4	3	8	5	2	2	1	6
Switch Phase									
Minimum Initial (s)	5.0	7.0	5.0	7.0	5.0	7.0	7.0	5.0	7.0
Minimum Split (s)	11.1	24.1	11.4	24.4	11.5	24.5	24.5	11.5	24.5
Total Split (s)	15.4	60.9	11.5	57.0	15.0	26.3	26.3	21.3	32.6
Total Split (%)	12.8%	50.8%	9.6%	47.5%	12.5%	21.9%	21.9%	17.8%	27.2%
Yellow Time (s)	4.3	4.3	4.3	4.3	4.3	4.3	4.3	4.3	4.3
All-Red Time (s)	1.8	1.8	2.1	2.1	2.2	2.2	2.2	2.2	2.2
Lost Time Adjust (s)	0.0	0.0	0.0	0.0	0.0	0.0	0.0	0.0	0.0
Total Lost Time (s)	6.1	6.1	6.4	6.4	6.5	6.5	6.5	6.5	6.5
Lead/Lag	Lead	Lag	Lead	Lag	Lead	Lag	Lag	Lead	Lag
Lead-Lag Optimize?	Yes	Yes	Yes	Yes	Yes	Yes	Yes	Yes	Yes
Recall Mode	None	None	None	None	None	C-Max	C-Max	None	C-Max
Act Effct Green (s)	9.3	59.4	5.1	50.6	8.1	19.8	19.8	14.8	29.1
Actuated g/C Ratio	0.08	0.50	0.04	0.42	0.07	0.16	0.16	0.12	0.24
v/c Ratio	0.95	0.77	0.44	1.09	0.64	0.71	0.17	0.99	0.57
Control Delay	111.1	8.2	92.4	63.1	78.1	60.9	0.9	110.2	33.7
Queue Delay	0.0	0.0	0.0	0.0	0.0	0.0	0.0	0.0	0.0
Total Delay	111.1	8.2	92.4	63.1	78.1	60.9	0.9	110.2	33.7
LOS	F	A	F	E	E	E	A	F	C
Approach Delay		14.8		63.5		53.7			56.5
Approach LOS		B		E		D			E

Intersection Summary	
Cycle Length: 120	
Actuated Cycle Length: 120	
Offset: 48 (40%), Referenced to phase 2:NBT and 6:SBT, Start of Green	
Natural Cycle: 130	
Control Type: Actuated-Coordinated	
Maximum v/c Ratio: 1.09	
Intersection Signal Delay: 43.8	Intersection LOS: D
Intersection Capacity Utilization 91.7%	ICU Level of Service F
Analysis Period (min) 15	

Splits and Phases: 20: 103rd Ave & Grand Ave

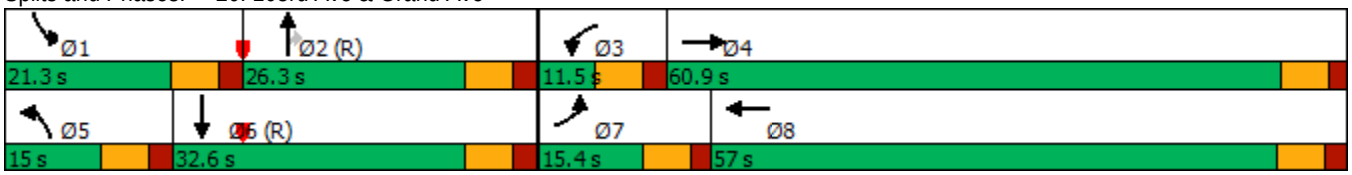

Lane Group	EBL	EBT	WBL	WBT	WBR	NBL	NBT	NBR	SBL	SBT	SBR
Lane Configurations											
Traffic Volume (vph)	210	1770	80	1960	350	50	320	50	340	470	250
Future Volume (vph)	210	1770	80	1960	350	50	320	50	340	470	250
Turn Type	Prot	NA	Prot	NA	Perm	Prot	NA	Perm	Prot	NA	Perm
Protected Phases	7	4	3	8		5	2		1	6	
Permitted Phases					8			2			6
Detector Phase	7	4	3	8	8	5	2	2	1	6	6
Switch Phase											
Minimum Initial (s)	5.0	7.0	5.0	7.0	7.0	5.0	7.0	7.0	5.0	7.0	7.0
Minimum Split (s)	11.6	24.6	11.6	24.6	24.6	11.4	24.4	24.4	11.4	24.4	24.4
Total Split (s)	16.0	62.2	11.8	58.0	58.0	11.6	25.8	25.8	20.2	34.4	34.4
Total Split (%)	13.3%	51.8%	9.8%	48.3%	48.3%	9.7%	21.5%	21.5%	16.8%	28.7%	28.7%
Yellow Time (s)	4.3	4.3	4.3	4.3	4.3	4.3	4.3	4.3	4.3	4.3	4.3
All-Red Time (s)	2.3	2.3	2.3	2.3	2.3	2.1	2.1	2.1	2.1	2.1	2.1
Lost Time Adjust (s)	0.0	0.0	0.0	0.0	0.0	0.0	0.0	0.0	0.0	0.0	0.0
Total Lost Time (s)	6.6	6.6	6.6	6.6	6.6	6.4	6.4	6.4	6.4	6.4	6.4
Lead/Lag	Lead	Lag	Lead	Lag	Lag	Lead	Lag	Lag	Lead	Lag	Lag
Lead-Lag Optimize?	Yes	Yes	Yes	Yes	Yes	Yes	Yes	Yes	Yes	Yes	Yes
Recall Mode	None	None	None	None	None	None	C-Max	C-Max	None	C-Max	C-Max
Act Effct Green (s)	9.4	55.6	5.2	51.4	51.4	5.2	19.4	19.4	13.8	30.3	30.3
Actuated g/C Ratio	0.08	0.46	0.04	0.43	0.43	0.04	0.16	0.16	0.12	0.25	0.25
v/c Ratio	0.85	0.84	0.58	0.97	0.45	0.36	0.60	0.12	0.93	0.57	0.53
Control Delay	95.8	12.7	72.0	46.9	8.1	62.8	51.7	0.6	83.3	42.8	21.6
Queue Delay	0.0	0.0	0.0	0.0	0.0	0.0	0.0	0.0	0.0	0.0	0.0
Total Delay	95.8	12.7	72.0	46.9	8.1	62.8	51.7	0.6	83.3	42.8	21.6
LOS	F	B	E	D	A	E	D	A	F	D	C
Approach Delay		21.3		42.1			47.0			50.8	
Approach LOS		C		D			D			D	

Intersection Summary	
Cycle Length: 120	
Actuated Cycle Length: 120	
Offset: 109 (91%), Referenced to phase 2:NBT and 6:SBT, Start of Green	
Natural Cycle: 110	
Control Type: Actuated-Coordinated	
Maximum v/c Ratio: 0.97	
Intersection Signal Delay: 36.8	Intersection LOS: D
Intersection Capacity Utilization 84.1%	ICU Level of Service E
Analysis Period (min) 15	

Splits and Phases: 25: 99th Ave & Grand Ave

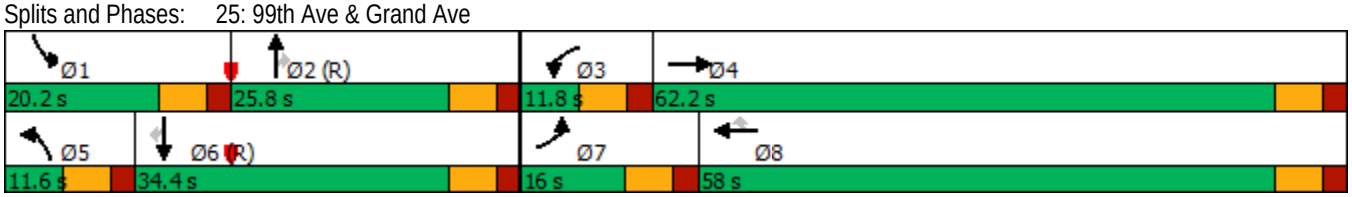

Lane Group	EBT	WBL	WBT
Lane Configurations			
Traffic Volume (vph)	1530	180	2390
Future Volume (vph)	1530	180	2390
Turn Type	NA	Prot	NA
Protected Phases	4	3	8
Permitted Phases			
Detector Phase	4	3	8
Switch Phase			
Minimum Initial (s)	7.0	5.0	7.0
Minimum Split (s)	23.8	10.3	23.8
Total Split (s)	89.0	21.0	110.0
Total Split (%)	80.9%	19.1%	100.0%
Yellow Time (s)	4.3	4.3	4.3
All-Red Time (s)	1.5	1.0	1.5
Lost Time Adjust (s)	0.0	0.0	0.0
Total Lost Time (s)	5.8	5.3	5.8
Lead/Lag	Lag	Lead	
Lead-Lag Optimize?	Yes	Yes	
Recall Mode	None	None	None
Act Effct Green (s)	87.4	11.5	110.0
Actuated g/C Ratio	0.79	0.10	1.00
v/c Ratio	0.60	0.54	0.51
Control Delay	5.0	47.6	3.4
Queue Delay	0.0	0.0	0.0
Total Delay	5.0	47.6	3.4
LOS	A	D	A
Approach Delay	5.0		6.5
Approach LOS	A		A

Intersection Summary	
Cycle Length: 110	
Actuated Cycle Length: 110	
Offset: 100 (91%), Referenced to phase 2: and 6:, Start of Green	
Natural Cycle: 45	
Control Type: Actuated-Coordinated	
Maximum v/c Ratio: 0.60	
Intersection Signal Delay: 5.8	Intersection LOS: A
Intersection Capacity Utilization 58.0%	ICU Level of Service B
Analysis Period (min) 15	

Splits and Phases: 30: SR-101L On Ramp & Grand Ave

Lane Group	EBT	WBT	NBL	NBR
Lane Configurations				
Traffic Volume (vph)	1530	2120	450	140
Future Volume (vph)	1530	2120	450	140
Turn Type	NA	NA	Prot	Perm
Protected Phases	4	8	2	
Permitted Phases				2
Detector Phase	4	8	2	2
Switch Phase				
Minimum Initial (s)	7.0	7.0	7.0	7.0
Minimum Split (s)	24.3	23.8	24.6	24.6
Total Split (s)	69.0	69.0	41.0	41.0
Total Split (%)	62.7%	62.7%	37.3%	37.3%
Yellow Time (s)	4.3	4.3	4.3	4.3
All-Red Time (s)	2.0	1.5	2.3	2.3
Lost Time Adjust (s)	0.0	0.0	0.0	0.0
Total Lost Time (s)	6.3	5.8	6.6	6.6
Lead/Lag				
Lead-Lag Optimize?				
Recall Mode	None	None	C-Max	C-Max
Act Effct Green (s)	55.4	55.9	41.7	41.7
Actuated g/C Ratio	0.50	0.51	0.38	0.38
v/c Ratio	0.65	0.60	0.38	0.25
Control Delay	17.7	19.5	27.1	23.3
Queue Delay	0.2	0.0	0.0	0.0
Total Delay	17.9	19.5	27.1	23.3
LOS	B	B	C	C
Approach Delay	17.9	19.5	26.2	
Approach LOS	B	B	C	

Intersection Summary	
Cycle Length: 110	
Actuated Cycle Length: 110	
Offset: 84 (76%), Referenced to phase 2:NBL and 6:, Start of Green	
Natural Cycle: 55	
Control Type: Actuated-Coordinated	
Maximum v/c Ratio: 0.65	
Intersection Signal Delay: 19.8	Intersection LOS: B
Intersection Capacity Utilization 58.0%	ICU Level of Service B
Analysis Period (min) 15	

Splits and Phases: 34: SR-101L Off Ramp & Grand Ave

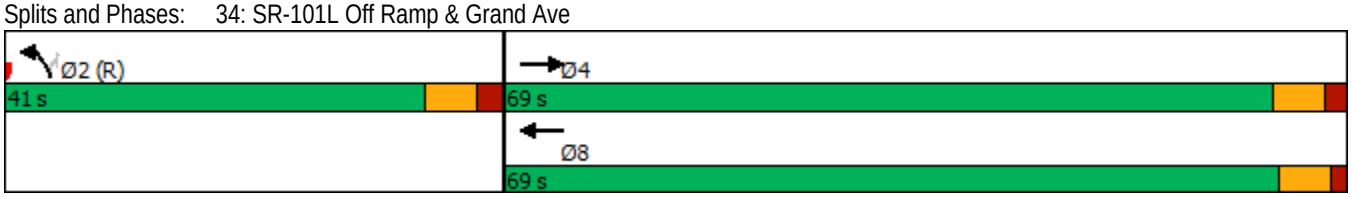

Lane Group	EBL	EBT	WBL	WBT	WBR	NBL	NBT	SBL	SBT	SBR
Lane Configurations										
Traffic Volume (vph)	650	930	50	1490	370	130	360	630	330	460
Future Volume (vph)	650	930	50	1490	370	130	360	630	330	460
Turn Type	Prot	NA	Prot	NA	Perm	Prot	NA	Prot	NA	pm+ov
Protected Phases	7	4	3	8		5	2	1	6	7
Permitted Phases					8					6
Detector Phase	7	4	3	8	8	5	2	1	6	7
Switch Phase										
Minimum Initial (s)	7.0	7.0	7.0	7.0	7.0	5.0	7.0	5.0	7.0	7.0
Minimum Split (s)	13.7	24.7	13.3	24.3	24.3	11.9	24.9	11.7	24.7	13.7
Total Split (s)	28.0	51.6	15.4	39.0	39.0	17.3	26.0	27.0	35.7	28.0
Total Split (%)	23.3%	43.0%	12.8%	32.5%	32.5%	14.4%	21.7%	22.5%	29.8%	23.3%
Yellow Time (s)	4.3	4.3	4.3	4.3	4.3	4.3	4.3	4.3	4.3	4.3
All-Red Time (s)	2.4	2.4	2.0	2.0	2.0	2.6	2.6	2.4	2.4	2.4
Lost Time Adjust (s)	0.0	0.0	0.0	0.0	0.0	0.0	0.0	0.0	0.0	0.0
Total Lost Time (s)	6.7	6.7	6.3	6.3	6.3	6.9	6.9	6.7	6.7	6.7
Lead/Lag	Lead	Lag	Lead	Lag	Lag	Lead	Lag	Lead	Lag	Lead
Lead-Lag Optimize?	Yes	Yes	Yes	Yes	Yes	Yes	Yes	Yes	Yes	Yes
Recall Mode	None	None	None	None	None	None	C-Max	None	C-Max	None
Act Effct Green (s)	21.3	48.3	8.4	32.7	32.7	10.4	19.1	20.3	29.0	57.0
Actuated g/C Ratio	0.18	0.40	0.07	0.27	0.27	0.09	0.16	0.17	0.24	0.48
v/c Ratio	1.15	0.54	0.44	1.16	0.63	0.90	0.76	1.17	0.79	0.62
Control Delay	129.3	29.0	64.5	119.1	16.3	105.0	56.8	121.1	55.3	32.8
Queue Delay	0.0	0.0	0.0	0.0	0.0	0.0	0.0	0.0	0.0	0.0
Total Delay	129.3	29.0	64.5	119.1	16.3	105.0	56.8	121.1	55.3	32.8
LOS	F	C	E	F	B	F	E	F	E	C
Approach Delay		68.0		97.8			68.7		77.2	
Approach LOS		E		F			E		E	

Intersection Summary	
Cycle Length: 120	
Actuated Cycle Length: 120	
Offset: 87 (73%), Referenced to phase 2:NBT and 6:SBT, Start of Green	
Natural Cycle: 150	
Control Type: Actuated-Coordinated	
Maximum v/c Ratio: 1.17	
Intersection Signal Delay: 80.7	Intersection LOS: F
Intersection Capacity Utilization 98.7%	ICU Level of Service F
Analysis Period (min) 15	

Splits and Phases: 37: 91st Ave & Grand Ave

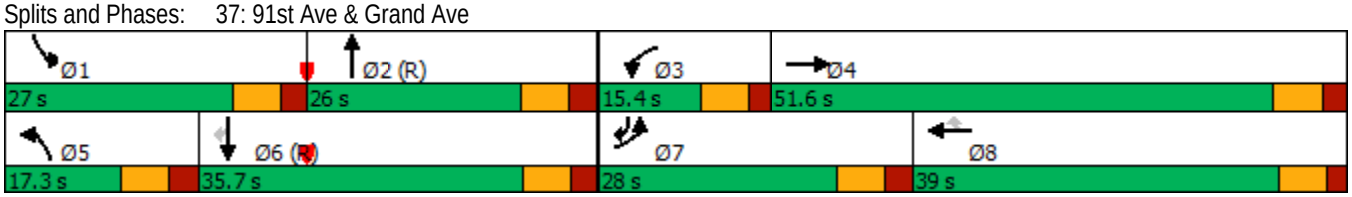

Lane Group	EBL	EBT	WBL	WBT	WBR	NBL	NBT	NBR	SBL	SBT
Lane Configurations										
Traffic Volume (vph)	50	20	550	10	170	40	810	520	260	790
Future Volume (vph)	50	20	550	10	170	40	810	520	260	790
Turn Type	Prot	NA	Prot	NA	Perm	Prot	NA	Perm	Prot	NA
Protected Phases	7	4	3	8		5	2		1	6
Permitted Phases					8			2		
Detector Phase	7	4	3	8	8	5	2	2	1	6
Switch Phase										
Minimum Initial (s)	5.0	7.0	5.0	7.0	7.0	5.0	7.0	7.0	7.0	7.0
Minimum Split (s)	11.3	24.3	11.1	24.1	24.1	11.1	24.1	24.1	12.8	23.8
Total Split (s)	15.3	24.3	30.0	39.0	39.0	13.1	38.7	38.7	27.0	52.6
Total Split (%)	12.8%	20.3%	25.0%	32.5%	32.5%	10.9%	32.3%	32.3%	22.5%	43.8%
Yellow Time (s)	4.3	4.3	4.3	4.3	4.3	4.3	4.3	4.3	4.3	4.3
All-Red Time (s)	2.0	2.0	1.8	1.8	1.8	1.8	1.8	1.8	1.5	1.5
Lost Time Adjust (s)	0.0	0.0	0.0	0.0	0.0	0.0	0.0	0.0	0.0	0.0
Total Lost Time (s)	6.3	6.3	6.1	6.1	6.1	6.1	6.1	6.1	5.8	5.8
Lead/Lag	Lead	Lag	Lead	Lag	Lag	Lead	Lag	Lag	Lead	Lag
Lead-Lag Optimize?	Yes	Yes	Yes	Yes	Yes	Yes	Yes	Yes	Yes	Yes
Recall Mode	None	None	None	None	None	None	C-Max	C-Max	None	C-Max
Act Effct Green (s)	8.0	18.6	23.3	23.3	36.2	6.7	33.1	33.1	20.7	49.4
Actuated g/C Ratio	0.07	0.16	0.19	0.19	0.30	0.06	0.28	0.28	0.17	0.41
v/c Ratio	0.45	0.35	0.93	0.92	0.30	0.43	0.88	0.75	0.92	0.61
Control Delay	65.4	16.0	82.1	80.9	5.5	81.0	23.7	6.9	83.9	30.5
Queue Delay	0.0	0.0	0.0	0.0	0.0	0.0	0.0	0.0	0.0	0.0
Total Delay	65.4	16.0	82.1	80.9	5.5	81.0	23.7	6.9	83.9	30.5
LOS	E	B	F	F	A	F	C	A	F	C
Approach Delay		31.3		63.8			19.0			43.4
Approach LOS		C		E			B			D

Intersection Summary	
Cycle Length: 120	
Actuated Cycle Length: 120	
Offset: 0 (0%), Referenced to phase 2:NBT and 6:SBT, Start of Green	
Natural Cycle: 100	
Control Type: Actuated-Coordinated	
Maximum v/c Ratio: 0.93	
Intersection Signal Delay: 37.3	Intersection LOS: D
Intersection Capacity Utilization 74.0%	ICU Level of Service D
Analysis Period (min) 15	

Splits and Phases: 42: Cactus Rd & 91st Ave

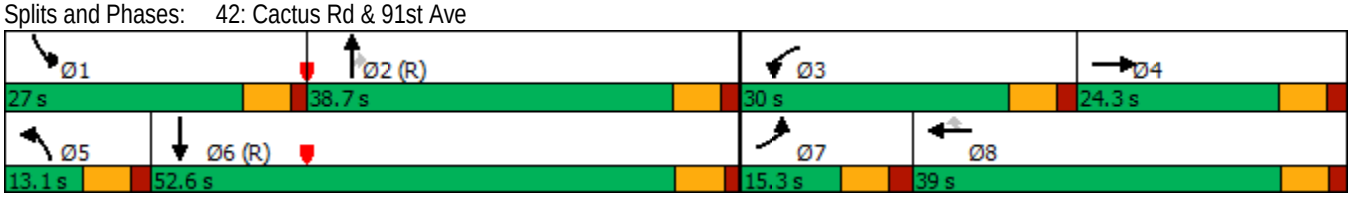

APPENDIX D

Conceptual Alternative Roll Plots

SCALE:

50 0 50 100

SCALE IN FEET

N

US-60/GRAND AVENUE - SUN CITY IMPLEMENTATION STUDY

111th AVE IMPROVEMENT (PHASE 1)

B&N

burgessniple.com

MARICOPA ASSOCIATION of GOVERNMENTS

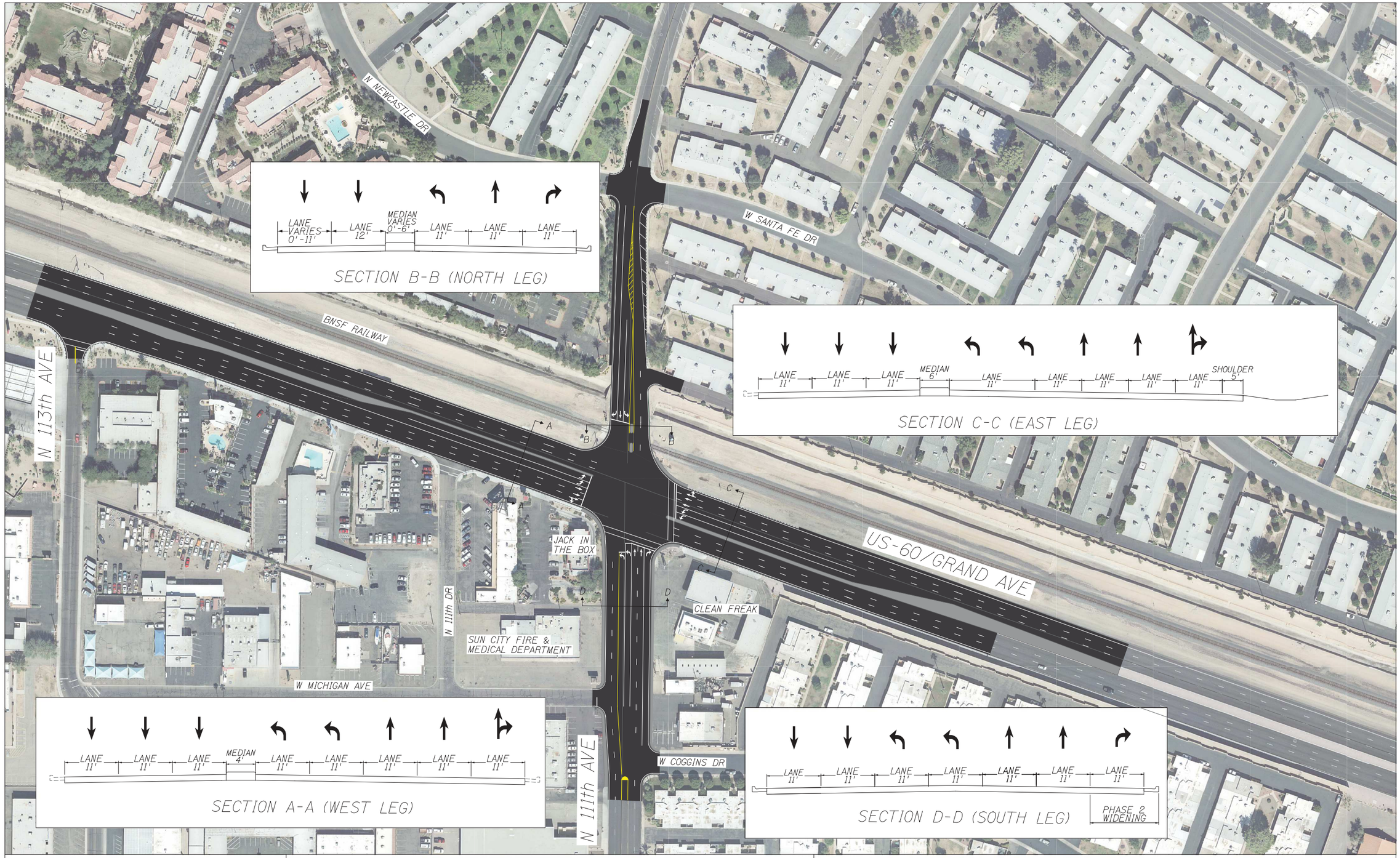

SCALE:

50 0 50 100

SCALE IN FEET

N

US-60/GRAND AVENUE - SUN CITY IMPLEMENTATION STUDY

111th AVE IMPROVEMENT (PHASE 2)

B&N

burgessniple.com

MARICOPA ASSOCIATION of GOVERNMENTS

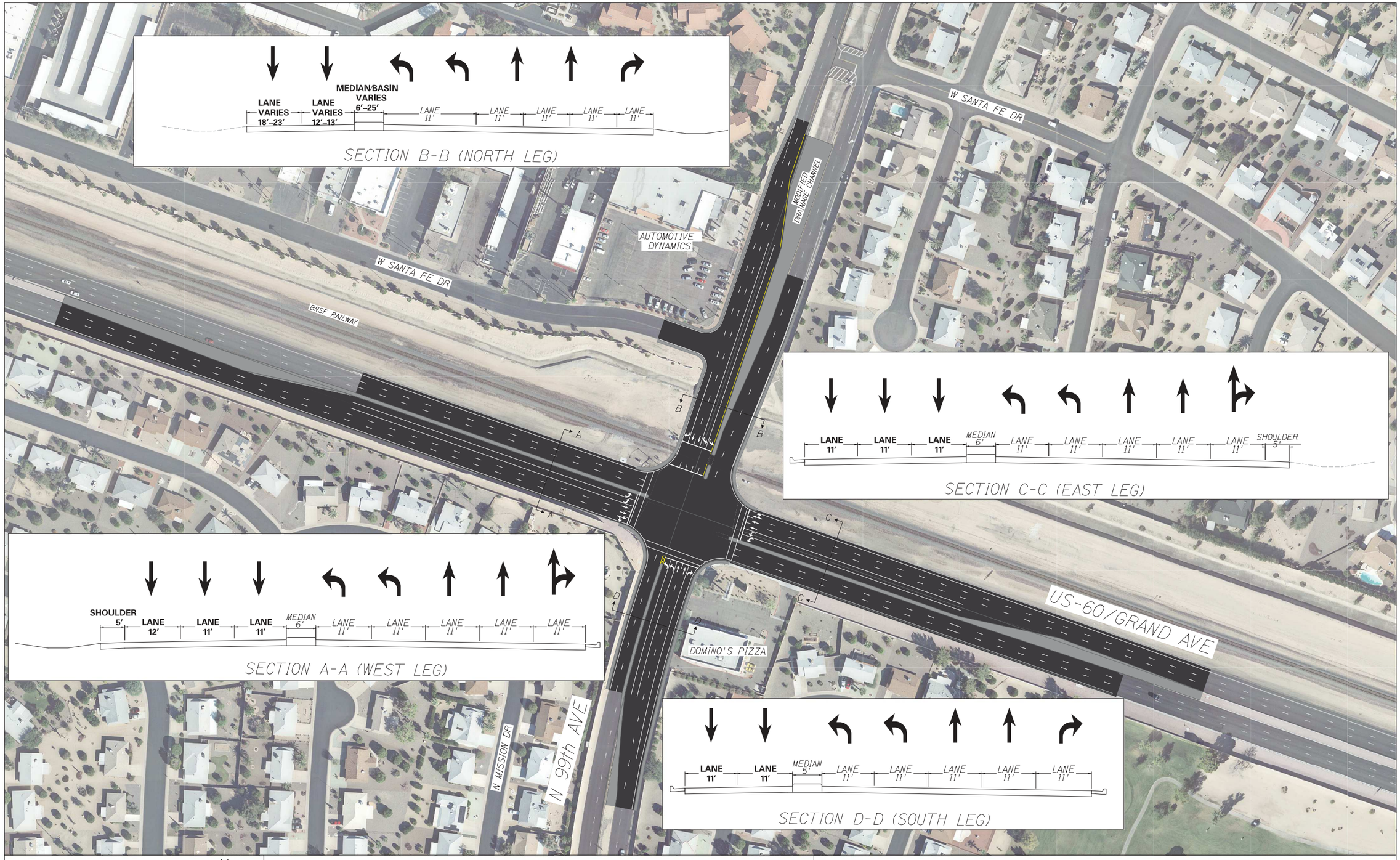

SCALE:

50 0 50 100

SCALE IN FEET

N

US-60/GRAND AVENUE - SUN CITY IMPLEMENTATION STUDY

99th AVE IMPROVEMENT (PHASE 1)

B&N burgessniple.com

MARICOPA ASSOCIATION of GOVERNMENTS

SCALE:

50 0 50 100

SCALE IN FEET

N

US-60/GRAND AVENUE - SUN CITY IMPLEMENTATION STUDY

GRAND AVE RIGHT TURN POCKET

B&N burgessniple.com

MARICOPA ASSOCIATION of GOVERNMENTS

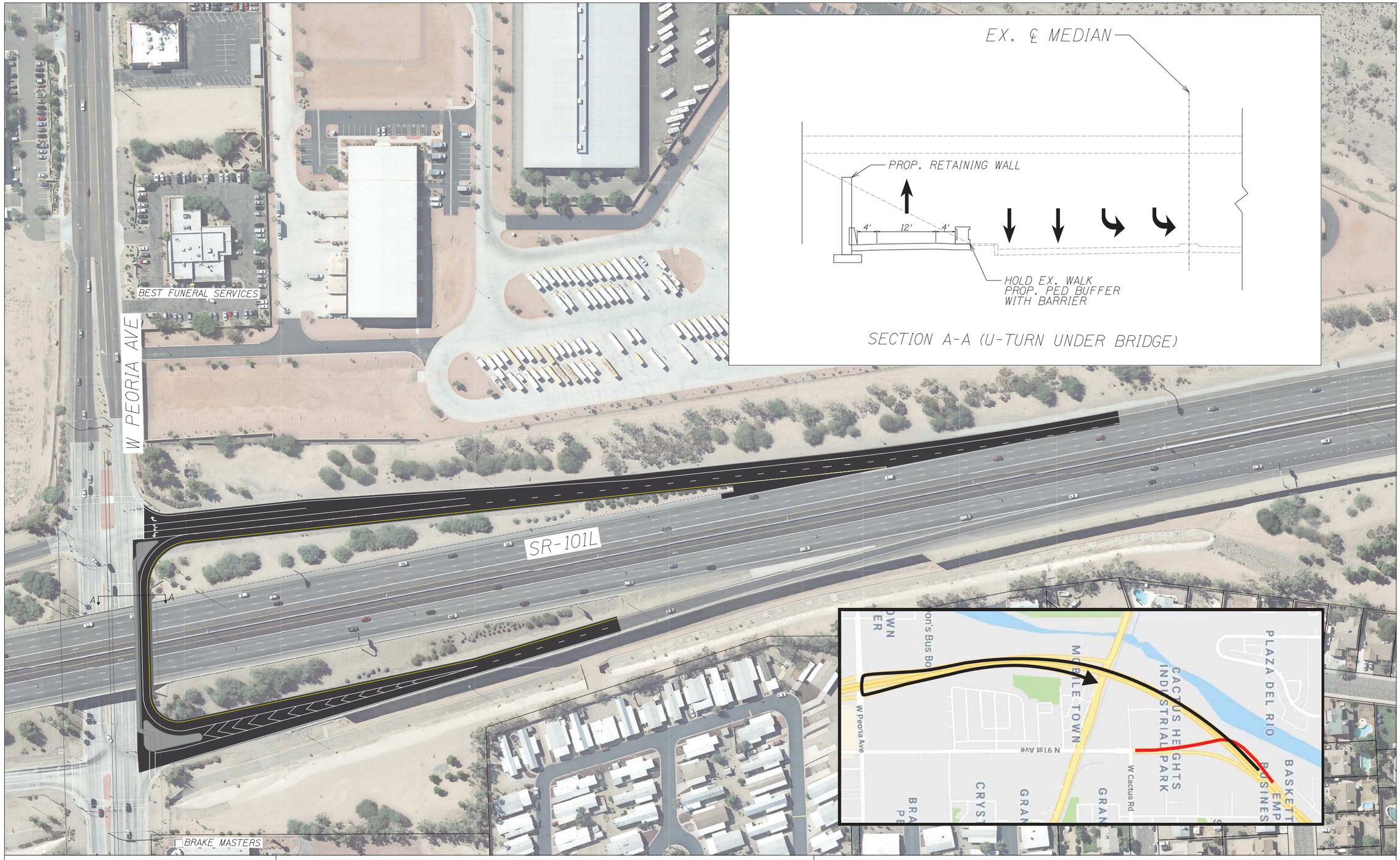

N

SCALE:

50 0 50 100

SCALE IN FEET

US-60/GRAND AVENUE - SUN CITY IMPLEMENTATION STUDY

91st AVE IMPROVEMENT (PEORIA AVE. TEXAS U-TURN)

B&N

burgessniple.com

MARICOPA ASSOCIATION of GOVERNMENTS

SCALE:

100 0 100 200

SCALE IN FEET

N

US-60/GRAND AVENUE - SUN CITY IMPLEMENTATION STUDY

91st AVE IMPROVEMENTS: GRAND AVE THRU-TURNS

B&N burgessniple.com

MARICOPA ASSOCIATION of GOVERNMENTS

SCALE:

100 0 100 200

SCALE IN FEET

N

US-60/GRAND AVENUE - SUN CITY IMPLEMENTATION STUDY

91st AVE IMPROVEMENTS: GRAND AVE THRU-TURNS (ALT 2)

B&N burgessniple.com

MARICOPA ASSOCIATION of GOVERNMENTS

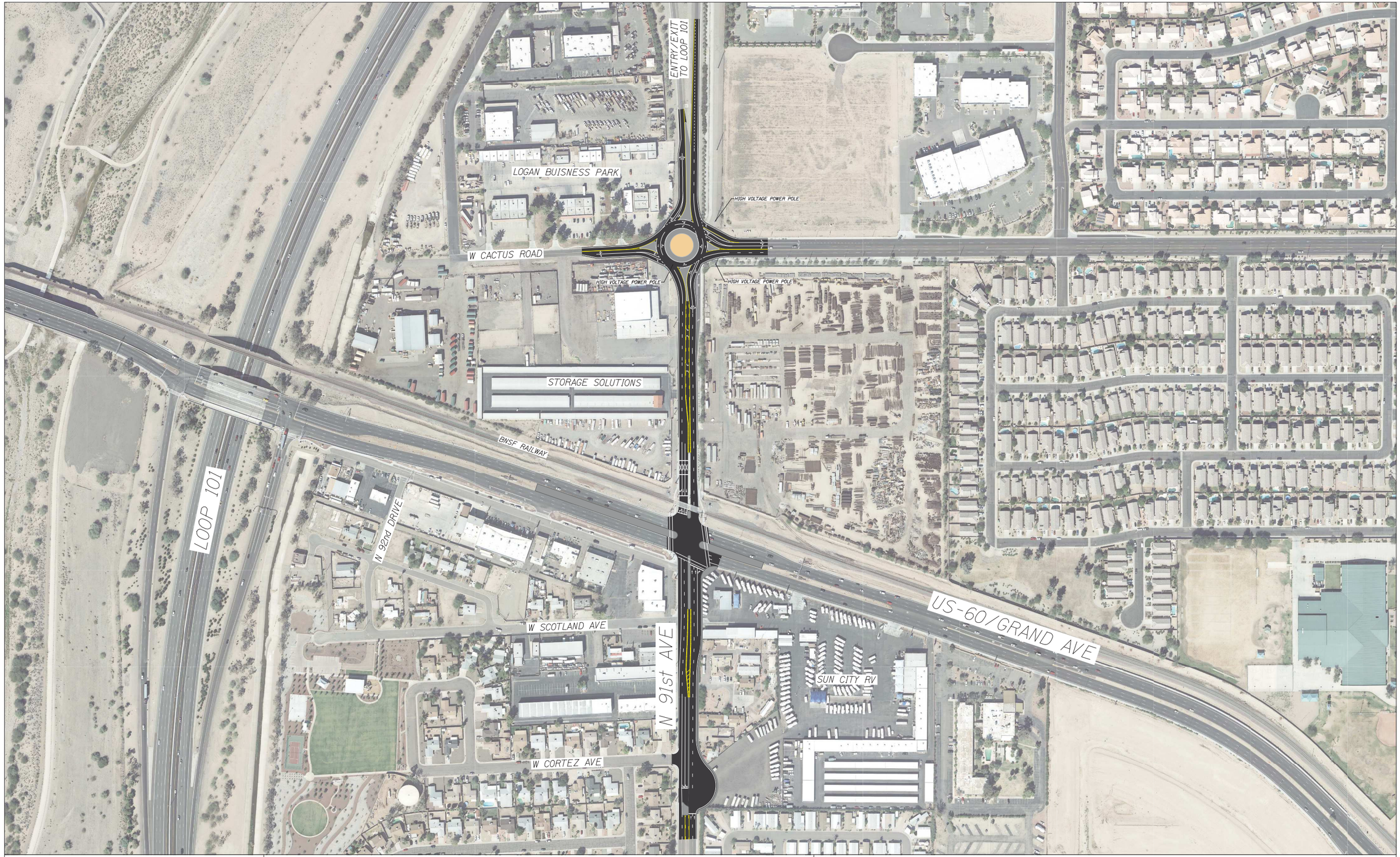

SCALE:

100 0 100 200

SCALE IN FEET

N

US-60/GRAND AVENUE - SUN CITY IMPLEMENTATION STUDY

91st AVE IMPROVEMENTS: ROUNDABOUT AND THRU-TURN

B&N burgessniple.com

MARICOPA ASSOCIATION of GOVERNMENTS

APPENDIX E

Conceptual Alternative Parametric Cost Opinions

ARIZONA DEPARTMENT OF TRANSPORTATION
CONSTRUCTION COST ESTIMATE SUMMARY

ROUTE: US-60/Grand Avenue
SEGMENT: 111th Ave: Phase 1
LENGTH: 0.4 Miles **TRACS NO.:** N/A
PROJECT DESCRIPTION: Phase 1 Cost Estimate
ESTIMATE LEVEL: Level 0
DATE: 6/15/19

ITEM	MAJOR ITEM DESCRIPTION	UNIT	QUANTITY	UNIT COST	TOTAL COST
200	**EARTHWORK**				
	CLEARING & REMOVALS	L.SUM	1	$ 150,000.00	150,000
	ROADWAY EXCAVATION	CU.YD.		$ 12.00	
	DRAINAGE EXCAVATION	CU.YD.		$ 15.00	
	BORROW	CU.YD.		$ 20.00	
	SUBGRADE TREATMENT	SQ.YD.		$ 15.00	
	FURNISH WATER	L.SUM			
	MISCELLANEOUS ITEMS	L.SUM			
	TOTAL ITEM 200				150,000
300 & 400	**BASE AND SURFACE TREATMENT**				
	AGGREGATE BASE	CU.YD.	6,100	$ 45.00	274,500
	CONCRETE PAVEMENT	SQ.YD.		$ 70.00	
	ASPHALT PAVEMENT	SQ.YD.	27,100	$ 45.00	1,219,500
	ARAC SURFACE	SQ.YD.		$ 6.00	
	MILLING & OVERLAY	SQ.YD.		$ 16.00	
	MISCELLANEOUS ITEMS	L.SUM			
	TOTAL ITEM 300 & 400				1,494,000
500	**DRAINAGE**				
	DRAINAGE SYSTEM (CLOSED)	L.FT.	180	$ 270.00	48,600
	DRAINAGE SYSTEM (OPEN)	L.FT.		$ 150.00	
	DRAINAGE SYSTEM (CONVEYANCE CHANNEL)	L.FT.		$ 650.00	
	PUMP STATION (NEW)	EACH		$ 2,500,000.00	
	PIPE CULVERTS	L.FT.		$ 430.00	
	MISCELLANEOUS ITEMS	L.SUM			
	TOTAL ITEM 500				48,600
600	**STRUCTURES**				
	FLYOVER RAMP (NEW SYSTEM TI)	SQ.FT.		$ 135.00	
	FLYOVER HOV RAMP	SQ.FT.		$ 175.00	
	OVERPASS TI BRIDGE	SQ.FT.		$ 140.00	
	RIVER CROSSING BRIDGE	SQ.FT.		$ 145.00	
	PEDESTRIAN BRIDGE	SQ.FT.		$ 180.00	
	BRIDGE WIDENING	SQ.FT.		$ 160.00	
	BRIDGE REHABILITATION	SQ.FT.		$ 100.00	
	BOX CULVERT	L.FT./CELL	80	$ 1,330.00	106,400
	SIGN STRUCTURES	EACH		$ 100,000.00	
	ITS STRUCTURE AND PANEL	EACH		$ 200,000.00	
	O&M CROSSING	EACH		$ 350,000.00	
	MISCELLANEOUS ITEMS	L.SUM			
	TOTAL ITEM 600				106,400
700	**TRAFFIC ENGINEERING**				
	SIGNING (FREEWAY)	MILE/DIR		$ 35,000.00	
	SIGNING (STREET)	MILE	0.65	$ 64,000.00	41,600
	PAVEMENT MARKING	LANE-MILE	4.95	$ 5,000.00	24,750
	LIGHTING	MILE		$ 375,000.00	
	TRAFFIC SIGNAL	EACH	1	$ 200,000.00	200,000
	INTELLIGENT TRANSPORTATION SYSTEM (ITS)	MILE		$ 525,000.00	
	MISCELLANEOUS ITEMS	L.SUM			
	TOTAL ITEM 700				266,350
800	**ROADSIDE DEVELOPMENT**				
	LANDSCAPING AND TOPSOIL	SQ.YD.		$ 15.00	
	UTILITY RELOCATION	L.SUM			
	MISCELLANEOUS ITEMS	L.SUM			
	TOTAL ITEM 800				0
900	**INCIDENTALS**				
	RETAINING WALLS	SQ.FT.		$ 75.00	
	SOUND WALLS	SQ.FT.		$ 40.00	
	ROADWAY APPURTENANCES	L.SUM	1	$ 200,000.00	200,000
	ADA IMPROVEMENTS	EACH	4	$ 3,000.00	12,000
	TRANSIT APPURTENANCES	L.SUM	1	$ 1,500.00	1,500
	RAILROAD ACCOMMODATIONS	L.SUM	1	$ 200,000.00	200,000
	MISCELLANEOUS ITEMS	L.SUM			
	TOTAL ITEM 900				413,500
	SUBTOTAL A (ITEM SUBTOTAL)				**$2,478,850**

ARIZONA DEPARTMENT OF TRANSPORTATION
CONSTRUCTION COST ESTIMATE SUMMARY

ROUTE: US-60/Grand Avenue
SEGMENT: 111th Ave: Phase 1
LENGTH: 0.4 Miles **TRACS NO.:** N/A
PROJECT DESCRIPTION: Phase 1 Cost Estimate
ESTIMATE LEVEL: Level 0
DATE: 6/15/19

ITEM	MAJOR ITEM DESCRIPTION	UNIT	QUANTITY	UNIT COST	TOTAL COST
PW	**PROJECT WIDE**				
	TRAFFIC CONTROL (10% OF SUBTOTAL A)			10.0%	247,900
	DUST PALLIATIVE (0% OF SUBTOTAL A)(INCLUDED IN FURNISH WATER)			0.0%	0
	QUALITY CONTROL (1% OF SUBTOTAL A)			1.0%	24,800
	CONSTRUCTION SURVEYING (1.5% OF SUBTOTAL A)			1.5%	37,200
	EROSION CONTROL (1% OF SUBTOTAL A)			1.0%	24,800
	MOBILIZATION (8% OF SUBTOTAL A)			8.0%	198,300
	UNIDENTIFIED ITEMS (20% OF SUBTOTAL A)			20.0%	495,800
	SUBTOTAL B (SUBTOTAL A + PROJECT WIDE)				**$3,507,650**
OTHER PROJ	**OTHER PROJECT COSTS**				
	DPS TRAFFIC CONTROL				0
	JOINT PROJECT AGREEMENT ITEMS				0
	CONTRACTOR INCENTIVES				0
	ENVIRONMENTAL MITIGATION				0
	PRESENT YEAR CONSTRUCTION BID COST (EXCLUDING UTILITIES & R/W)				**$3,507,650**
INFL	**INFLATION AND BELOW THE LINE ITEMS**				
	LABOR AND MATERIAL INFLATION TO CONSTRUCTION YEAR 20xx (X%/YR)			**NOT INCLUDED**	0
	POST DESIGN SERVICES (1% OF SUBTOTAL A)			1.0%	35,100
	CONSTRUCTION CONTINGENCIES (5% OF SUBTOTAL A)			5.0%	175,400
	CONSTRUCTION ENGINEERING (8% OF SUBTOTAL A)			8.0%	280,600
	INDIRECT COST ALLOCATION (9.9% OF SUBTOTAL B + OTHER PROJECT COSTS)			9.90%	395,876
	DEPARTMENT CONSTRUCTION COST (EXCLUDING UTILITIES & R/W)				**$4,394,626**
DES	**PREDESIGN AND FINAL DESIGN**				
	PREDESIGN/NEPA/PI SERVICES (3% OF CONSTRUCTION YEAR COST)			3.0%	105,230
	FINAL DESIGN SERVICES (8% OF CONSTRUCTION YEAR COST)			8.0%	280,612
	INDIRECT COST ALLOCATION (9.9% OF ALL DESIGN COSTS)			9.90%	38,198
	TOTAL ESTIMATED DESIGN COST				**$424,040**
UTIL	**UTILITY RELOCATION**				
	PRIOR RIGHT UTILITY RELOCATIONS & SERVICE AGREEMENTS		1	50,000	50,000
	INDIRECT COST ALLOCATION (9.9% OF ALL UTILITY COSTS)			9.90%	4,950
	UTILITY RELOCATION COST INFLATION TO CONSTRUCTION YEAR 20xx (X%/YR)			1.00	0
	TOTAL ESTIMATED UTILITY COST				**$54,950**
R/W	**RIGHT-OF-WAY**				
	RIGHT-OF-WAY	L. SUM	1	4,400	4,400
	INDIRECT COST ALLOCATION (9.9% OF ALL RIGHT-OF-WAY COSTS)			9.90%	436
	RIGHT-OF-WAY PRICE ESCALATION TO ACQUISITION YEAR 20xx (X%/YR)			1	0
	RIGHT-OF-WAY COSTS				**$4,836**
	TOTAL ESTIMATED PROJECT COST				**$4,878,452**

ARIZONA DEPARTMENT OF TRANSPORTATION
CONSTRUCTION COST ESTIMATE SUMMARY

ROUTE: US-60/Grand Avenue
SEGMENT: 111th Ave: Phase 2
LENGTH: 0.1 Miles **TRACS NO.:** N/A
PROJECT DESCRIPTION: Phase 2 Cost Estimate
ESTIMATE LEVEL: Level 0
DATE: 6/15/19

ITEM	MAJOR ITEM DESCRIPTION	UNIT	QUANTITY	UNIT COST	TOTAL COST
200	**EARTHWORK**				
	CLEARING & REMOVALS	L.SUM	1	$ 25,000.00	25,000
	ROADWAY EXCAVATION	CU.YD.		$ 12.00	
	DRAINAGE EXCAVATION	CU.YD.		$ 15.00	
	BORROW	CU.YD.		$ 20.00	
	SUBGRADE TREATMENT	SQ.YD.		$ 15.00	
	FURNISH WATER	L.SUM			
	MISCELLANEOUS ITEMS	L.SUM			
	TOTAL ITEM 200				25,000
300 & 400	**BASE AND SURFACE TREATMENT**				
	AGGREGATE BASE	CU.YD.	200	$ 45.00	9,000
	CONCRETE PAVEMENT	SQ.YD.		$ 70.00	
	ASPHALT PAVEMENT	SQ.YD.	560	$ 45.00	25,200
	ARAC SURFACE	SQ.YD.		$ 6.00	
	MILLING & OVERLAY	SQ.YD.		$ 16.00	
	MISCELLANEOUS ITEMS	L.SUM			
	TOTAL ITEM 300 & 400				34,200
500	**DRAINAGE**				
	DRAINAGE SYSTEM (CLOSED)	L.FT.	20	$ 270.00	5,400
	DRAINAGE SYSTEM (OPEN)	L.FT.		$ 150.00	
	DRAINAGE SYSTEM (CONVEYANCE CHANNEL)	L.FT.		$ 650.00	
	PUMP STATION (NEW)	EACH		$ 2,500,000.00	
	PIPE CULVERTS	L.FT.		$ 430.00	
	MISCELLANEOUS ITEMS	L.SUM			
	TOTAL ITEM 500				5,400
600	**STRUCTURES**				
	FLYOVER RAMP (NEW SYSTEM TI)	SQ.FT.		$ 135.00	
	FLYOVER HOV RAMP	SQ.FT.		$ 175.00	
	OVERPASS TI BRIDGE	SQ.FT.		$ 140.00	
	RIVER CROSSING BRIDGE	SQ.FT.		$ 145.00	
	PEDESTRIAN BRIDGE	SQ.FT.		$ 180.00	
	BRIDGE WIDENING	SQ.FT.		$ 160.00	
	BRIDGE REHABILITATION	SQ.FT.		$ 100.00	
	BOX CULVERT	L.FT./CELL	0	$ 1,330.00	0
	SIGN STRUCTURES	EACH		$ 100,000.00	
	ITS STRUCTURE AND PANEL	EACH		$ 200,000.00	
	O&M CROSSING	EACH		$ 350,000.00	
	MISCELLANEOUS ITEMS	L.SUM			
	TOTAL ITEM 600				0
700	**TRAFFIC ENGINEERING**				
	SIGNING (FREEWAY)	MILE/DIR		$ 35,000.00	
	SIGNING (STREET)	MILE	0.25	$ 64,000.00	16,000
	PAVEMENT MARKING	LANE-MILE	0.25	$ 5,000.00	1,250
	LIGHTING	MILE		$ 375,000.00	
	TRAFFIC SIGNAL	EACH		$ 200,000.00	
	INTELLIGENT TRANSPORTATION SYSTEM (ITS)	MILE		$ 525,000.00	
	MISCELLANEOUS ITEMS	L.SUM			
	TOTAL ITEM 700				17,250
800	**ROADSIDE DEVELOPMENT**				
	LANDSCAPING AND TOPSOIL	SQ.YD.		$ 15.00	
	UTILITY RELOCATION	L.SUM			
	MISCELLANEOUS ITEMS	L.SUM			
	TOTAL ITEM 800				0
900	**INCIDENTALS**				
	RETAINING WALLS	SQ.FT.		$ 75.00	
	SOUND WALLS	SQ.FT.		$ 40.00	
	ROADWAY APPURTENANCES	L.SUM	1	$ 30,000.00	30,000
	ADA IMPROVEMENTS	EACH	2	$ 3,000.00	6,000
	TRANSIT APPURTENANCES	L.SUM			
	RAILROAD ACCOMMODATIONS	L.SUM			
	MISCELLANEOUS ITEMS	L.SUM			
	TOTAL ITEM 900				36,000
	SUBTOTAL A (ITEM SUBTOTAL)				**$117,850**

ARIZONA DEPARTMENT OF TRANSPORTATION
CONSTRUCTION COST ESTIMATE SUMMARY

ROUTE: US-60/Grand Avenue
SEGMENT: 111th Ave: Phase 2
LENGTH: 0.1 Miles **TRACS NO.:** N/A
PROJECT DESCRIPTION: Phase 2 Cost Estimate
ESTIMATE LEVEL: Level 0
DATE: 6/15/19

ITEM	MAJOR ITEM DESCRIPTION	UNIT	QUANTITY	UNIT COST	TOTAL COST
PW	**PROJECT WIDE**				
	TRAFFIC CONTROL (8% OF SUBTOTAL A)			8.0%	9,400
	DUST PALLIATIVE (0% OF SUBTOTAL A)(INCLUDED IN FURNISH WATER)			0.0%	0
	QUALITY CONTROL (1% OF SUBTOTAL A)			1.0%	1,200
	CONSTRUCTION SURVEYING (1.5% OF SUBTOTAL A)			1.5%	1,800
	EROSION CONTROL (1% OF SUBTOTAL A)			1.0%	1,200
	MOBILIZATION (8% OF SUBTOTAL A)			8.0%	9,400
	UNIDENTIFIED ITEMS (20% OF SUBTOTAL A)			20.0%	23,600
	SUBTOTAL B (SUBTOTAL A + PROJECT WIDE)				**$164,450**
OTHER PROJ	**OTHER PROJECT COSTS**				
	DPS TRAFFIC CONTROL				0
	JOINT PROJECT AGREEMENT ITEMS				0
	CONTRACTOR INCENTIVES				0
	ENVIRONMENTAL MITIGATION				0
	PRESENT YEAR CONSTRUCTION BID COST (EXCLUDING UTILITIES & R/W)				**$164,450**
INFL	**INFLATION AND BELOW THE LINE ITEMS**				
	LABOR AND MATERIAL INFLATION TO CONSTRUCTION YEAR 20xx (X%/YR)			NOT INCLUDED	0
	POST DESIGN SERVICES (1% OF SUBTOTAL A)			1.0%	1,600
	CONSTRUCTION CONTINGENCIES (5% OF SUBTOTAL A)			5.0%	8,200
	CONSTRUCTION ENGINEERING (8% OF SUBTOTAL A)			8.0%	13,200
	INDIRECT COST ALLOCATION (9.9% OF SUBTOTAL B + OTHER PROJECT COSTS)			9.90%	18,558
	DEPARTMENT CONSTRUCTION COST (EXCLUDING UTILITIES & R/W)				**$206,008**
DES	**PREDESIGN AND FINAL DESIGN**				
	PREDESIGN/NEPA/PI SERVICES (3% OF CONSTRUCTION YEAR COST)			3.0%	4,934
	FINAL DESIGN SERVICES (8% OF CONSTRUCTION YEAR COST)			8.0%	13,156
	INDIRECT COST ALLOCATION (9.9% OF ALL DESIGN COSTS)			9.90%	1,791
	TOTAL ESTIMATED DESIGN COST				**$19,881**
UTIL	**UTILITY RELOCATION**				
	PRIOR RIGHT UTILITY RELOCATIONS & SERVICE AGREEMENTS		1	0	0
	INDIRECT COST ALLOCATION (9.9% OF ALL UTILITY COSTS)			9.90%	0
	UTILITY RELOCATION COST INFLATION TO CONSTRUCTION YEAR 20xx (X%/YR)			1.00	0
	TOTAL ESTIMATED UTILITY COST				**$0**
R/W	**RIGHT-OF-WAY**				
	RIGHT-OF-WAY	L. SUM	1	27,600	27,600
	INDIRECT COST ALLOCATION (9.9% OF ALL RIGHT-OF-WAY COSTS)			9.90%	2,732
	RIGHT-OF-WAY PRICE ESCALATION TO ACQUISITION YEAR 20xx (X%/YR)			1	0
	RIGHT-OF-WAY COSTS				**$30,332**
	TOTAL ESTIMATED PROJECT COST				**$256,221**

ARIZONA DEPARTMENT OF TRANSPORTATION
CONSTRUCTION COST ESTIMATE SUMMARY

ROUTE: US-60/Grand Avenue
SEGMENT: 99th Ave: Phase 1
LENGTH: 0.5 Miles **TRACS NO.:** N/A
PROJECT DESCRIPTION: Phase 1 Cost Estimate
ESTIMATE LEVEL: Level 0
DATE: 6/15/19

ITEM	MAJOR ITEM DESCRIPTION	UNIT	QUANTITY	UNIT COST	TOTAL COST
200	**EARTHWORK**				
	CLEARING & REMOVALS	L.SUM	1	$ 250,000.00	250,000
	ROADWAY EXCAVATION	CU.YD.		$ 12.00	
	DRAINAGE EXCAVATION	CU.YD.		$ 15.00	
	BORROW	CU.YD.		$ 20.00	
	SUBGRADE TREATMENT	SQ.YD.		$ 15.00	
	FURNISH WATER	L.SUM			
	MISCELLANEOUS ITEMS	L.SUM			
	TOTAL ITEM 200				250,000
300 & 400	**BASE AND SURFACE TREATMENT**				
	AGGREGATE BASE	CU.YD.	6,200	$ 45.00	279,000
	CONCRETE PAVEMENT	SQ.YD.		$ 70.00	
	ASPHALT PAVEMENT	SQ.YD.	27,860	$ 45.00	1,253,700
	ARAC SURFACE	SQ.YD.		$ 6.00	
	MILLING & OVERLAY	SQ.YD.		$ 16.00	
	MISCELLANEOUS ITEMS	L.SUM			
	TOTAL ITEM 300 & 400				1,532,700
500	**DRAINAGE**				
	DRAINAGE SYSTEM (CLOSED)	L.FT.	125	$ 270.00	33,750
	DRAINAGE SYSTEM (OPEN)	L.FT.		$ 150.00	
	DRAINAGE SYSTEM (CONVEYANCE CHANNEL)	L.FT.		$ 650.00	
	PUMP STATION (NEW)	EACH		$ 2,500,000.00	
	PIPE CULVERTS	L.FT.		$ 430.00	
	MISCELLANEOUS ITEMS	L.SUM			
	TOTAL ITEM 500				33,750
600	**STRUCTURES**				
	FLYOVER RAMP (NEW SYSTEM TI)	SQ.FT.		$ 135.00	
	FLYOVER HOV RAMP	SQ.FT.		$ 175.00	
	OVERPASS TI BRIDGE	SQ.FT.		$ 140.00	
	RIVER CROSSING BRIDGE	SQ.FT.		$ 145.00	
	PEDESTRIAN BRIDGE	SQ.FT.		$ 180.00	
	BRIDGE WIDENING	SQ.FT.		$ 160.00	
	BRIDGE REHABILITATION	SQ.FT.		$ 100.00	
	BOX CULVERT	L.FT./CELL	1,175	$ 1,330.00	1,562,750
	SIGN STRUCTURES	EACH		$ 100,000.00	
	ITS STRUCTURE AND PANEL	EACH		$ 200,000.00	
	O&M CROSSING	EACH		$ 350,000.00	
	MISCELLANEOUS ITEMS	L.SUM			
	TOTAL ITEM 600				1,562,750
700	**TRAFFIC ENGINEERING**				
	SIGNING (FREEWAY)	MILE/DIR		$ 35,000.00	
	SIGNING (STREET)	MILE	0.70	$ 64,000.00	44,800
	PAVEMENT MARKING	LANE-MILE	5.80	$ 5,000.00	29,000
	LIGHTING	MILE		$ 375,000.00	
	TRAFFIC SIGNAL	EACH	1	$ 200,000.00	200,000
	INTELLIGENT TRANSPORTATION SYSTEM (ITS)	MILE		$ 525,000.00	
	MISCELLANEOUS ITEMS	L.SUM			
	TOTAL ITEM 700				273,800
800	**ROADSIDE DEVELOPMENT**				
	LANDSCAPING AND TOPSOIL	SQ.YD.		$ 15.00	
	UTILITY RELOCATION	L.SUM			
	MISCELLANEOUS ITEMS	L.SUM			
	TOTAL ITEM 800				0
900	**INCIDENTALS**				
	RETAINING WALLS	SQ.FT.		$ 75.00	
	SOUND WALLS	SQ.FT.		$ 40.00	
	ROADWAY APPURTENANCES	L.SUM	1	$ 350,000.00	350,000
	ADA IMPROVEMENTS	EACH	6	$ 3,000.00	18,000
	TRANSIT APPURTENANCES	L.SUM			
	RAILROAD ACCOMMODATIONS	L.SUM	1	$ 200,000.00	200,000
	MISCELLANEOUS ITEMS	L.SUM			
	TOTAL ITEM 900				568,000
	SUBTOTAL A (ITEM SUBTOTAL)				**$4,221,000**

ARIZONA DEPARTMENT OF TRANSPORTATION
CONSTRUCTION COST ESTIMATE SUMMARY

ROUTE: US-60/Grand Avenue
SEGMENT: 99th Ave: Phase 1
LENGTH: 0.5 Miles **TRACS NO.:** N/A
PROJECT DESCRIPTION: Phase 1 Cost Estimate
ESTIMATE LEVEL: Level 0
DATE: 6/15/19

ITEM	MAJOR ITEM DESCRIPTION	UNIT	QUANTITY	UNIT COST	TOTAL COST
PW	**PROJECT WIDE**				
	TRAFFIC CONTROL (8% OF SUBTOTAL A)			8.0%	337,700
	DUST PALLIATIVE (0% OF SUBTOTAL A)(INCLUDED IN FURNISH WATER)			0.0%	0
	QUALITY CONTROL (1% OF SUBTOTAL A)			1.0%	42,200
	CONSTRUCTION SURVEYING (1.5% OF SUBTOTAL A)			1.5%	63,300
	EROSION CONTROL (1% OF SUBTOTAL A)			1.0%	42,200
	MOBILIZATION (8% OF SUBTOTAL A)			8.0%	337,700
	UNIDENTIFIED ITEMS (20% OF SUBTOTAL A)			20.0%	844,200
	SUBTOTAL B (SUBTOTAL A + PROJECT WIDE)				**$5,888,300**
OTHER PROJ	**OTHER PROJECT COSTS**				
	DPS TRAFFIC CONTROL				0
	JOINT PROJECT AGREEMENT ITEMS				0
	CONTRACTOR INCENTIVES				0
	ENVIRONMENTAL MITIGATION				0
	PRESENT YEAR CONSTRUCTION BID COST (EXCLUDING UTILITIES & R/W)				**$5,888,300**
INFL	**INFLATION AND BELOW THE LINE ITEMS**				
	LABOR AND MATERIAL INFLATION TO CONSTRUCTION YEAR 20xx (X%/YR)			**NOT INCLUDED**	0
	POST DESIGN SERVICES (1% OF SUBTOTAL A)			1.0%	58,900
	CONSTRUCTION CONTINGENCIES (5% OF SUBTOTAL A)			5.0%	294,400
	CONSTRUCTION ENGINEERING (8% OF SUBTOTAL A)			8.0%	471,100
	INDIRECT COST ALLOCATION (9.9% OF SUBTOTAL B + OTHER PROJECT COSTS)			9.90%	664,557
	DEPARTMENT CONSTRUCTION COST (EXCLUDING UTILITIES & R/W)				**$7,377,257**
DES	**PREDESIGN AND FINAL DESIGN**				
	PREDESIGN/NEPA/PI SERVICES (3% OF CONSTRUCTION YEAR COST)			3.0%	176,649
	FINAL DESIGN SERVICES (8% OF CONSTRUCTION YEAR COST)			8.0%	471,064
	INDIRECT COST ALLOCATION (9.9% OF ALL DESIGN COSTS)			9.90%	64,124
	TOTAL ESTIMATED DESIGN COST				**$711,837**
UTIL	**UTILITY RELOCATION**				
	PRIOR RIGHT UTILITY RELOCATIONS & SERVICE AGREEMENTS		1	50,000	50,000
	INDIRECT COST ALLOCATION (9.9% OF ALL UTILITY COSTS)			9.90%	4,950
	UTILITY RELOCATION COST INFLATION TO CONSTRUCTION YEAR 20xx (X%/YR)			1.00	0
	TOTAL ESTIMATED UTILITY COST				**$54,950**
R/W	**RIGHT-OF-WAY**				
	RIGHT-OF-WAY	L. SUM	1	13,500	13,500
	INDIRECT COST ALLOCATION (9.9% OF ALL RIGHT-OF-WAY COSTS)			9.90%	1,337
	RIGHT-OF-WAY PRICE ESCALATION TO ACQUISITION YEAR 20xx (X%/YR)			1	0
	RIGHT-OF-WAY COSTS				**$14,837**
	TOTAL ESTIMATED PROJECT COST				**$8,158,881**

ARIZONA DEPARTMENT OF TRANSPORTATION
CONSTRUCTION COST ESTIMATE SUMMARY

ROUTE: US-60/Grand Avenue
SEGMENT: 99th Ave: Phase 2
LENGTH: 0.2 Miles **TRACS NO.:** N/A
PROJECT DESCRIPTION: Phase 2 Cost Estimate
ESTIMATE LEVEL: Level 0
DATE: 6/15/19

ITEM	MAJOR ITEM DESCRIPTION	UNIT	QUANTITY	UNIT COST	TOTAL COST
200	**EARTHWORK**				
	CLEARING & REMOVALS	L.SUM	1	$ 25,000.00	25,000
	ROADWAY EXCAVATION	CU.YD.		$ 12.00	
	DRAINAGE EXCAVATION	CU.YD.		$ 15.00	
	BORROW	CU.YD.		$ 20.00	
	SUBGRADE TREATMENT	SQ.YD.		$ 15.00	
	FURNISH WATER	L.SUM			
	MISCELLANEOUS ITEMS	L.SUM			
	TOTAL ITEM 200				25,000
300 & 400	**BASE AND SURFACE TREATMENT**				
	AGGREGATE BASE	CU.YD.	300	$ 45.00	13,500
	CONCRETE PAVEMENT	SQ.YD.		$ 70.00	
	ASPHALT PAVEMENT	SQ.YD.	930	$ 45.00	41,850
	ARAC SURFACE	SQ.YD.		$ 6.00	
	MILLING & OVERLAY	SQ.YD.		$ 16.00	
	MISCELLANEOUS ITEMS	L.SUM			
	TOTAL ITEM 300 & 400				55,350
500	**DRAINAGE**				
	DRAINAGE SYSTEM (CLOSED)	L.FT.		$ 270.00	
	DRAINAGE SYSTEM (OPEN)	L.FT.		$ 150.00	
	DRAINAGE SYSTEM (CONVEYANCE CHANNEL)	L.FT.		$ 650.00	
	PUMP STATION (NEW)	EACH		$ 2,500,000.00	
	PIPE CULVERTS	L.FT.		$ 430.00	
	MISCELLANEOUS ITEMS	L.SUM			
	TOTAL ITEM 500				0
600	**STRUCTURES**				
	FLYOVER RAMP (NEW SYSTEM TI)	SQ.FT.		$ 135.00	
	FLYOVER HOV RAMP	SQ.FT.		$ 175.00	
	OVERPASS TI BRIDGE	SQ.FT.		$ 140.00	
	RIVER CROSSING BRIDGE	SQ.FT.		$ 145.00	
	PEDESTRIAN BRIDGE	SQ.FT.		$ 180.00	
	BRIDGE WIDENING	SQ.FT.		$ 160.00	
	BRIDGE REHABILITATION	SQ.FT.		$ 100.00	
	BOX CULVERT	L.FT./CELL		$ 1,330.00	
	SIGN STRUCTURES	EACH		$ 100,000.00	
	ITS STRUCTURE AND PANEL	EACH		$ 200,000.00	
	O&M CROSSING	EACH		$ 350,000.00	
	MISCELLANEOUS ITEMS	L.SUM			
	TOTAL ITEM 600				0
700	**TRAFFIC ENGINEERING**				
	SIGNING (FREEWAY)	MILE/DIR		$ 35,000.00	
	SIGNING (STREET)	MILE	0.20	$ 64,000.00	12,800
	PAVEMENT MARKING	LANE-MILE	0.20	$ 5,000.00	1,000
	LIGHTING	MILE		$ 375,000.00	
	TRAFFIC SIGNAL	EACH		$ 200,000.00	
	INTELLIGENT TRANSPORTATION SYSTEM (ITS)	MILE		$ 525,000.00	
	MISCELLANEOUS ITEMS	L.SUM			
	TOTAL ITEM 700				13,800
800	**ROADSIDE DEVELOPMENT**				
	LANDSCAPING AND TOPSOIL	SQ.YD.		$ 15.00	
	UTILITY RELOCATION	L.SUM			
	MISCELLANEOUS ITEMS	L.SUM			
	TOTAL ITEM 800				0
900	**INCIDENTALS**				
	RETAINING WALLS	SQ.FT.		$ 75.00	
	SOUND WALLS	SQ.FT.		$ 40.00	
	ROADWAY APPURTENANCES	L.SUM		$ 5,000.00	
	ADA IMPROVEMENTS	EACH	1	$ 3,000.00	3,000
	TRANSIT APPURTENANCES	L.SUM			
	RAILROAD ACCOMMODATIONS	L.SUM			
	MISCELLANEOUS ITEMS	L.SUM			
	TOTAL ITEM 900				3,000
	SUBTOTAL A (ITEM SUBTOTAL)				**$97,150**

ARIZONA DEPARTMENT OF TRANSPORTATION
CONSTRUCTION COST ESTIMATE SUMMARY

ROUTE: US-60/Grand Avenue
SEGMENT: 99th Ave: Phase 2
LENGTH: 0.2 Miles **TRACS NO.:** N/A
PROJECT DESCRIPTION: Phase 2 Cost Estimate
ESTIMATE LEVEL: Level 0
DATE: 6/15/19

ITEM	MAJOR ITEM DESCRIPTION	UNIT	QUANTITY	UNIT COST	TOTAL COST
PW	**PROJECT WIDE**				
	TRAFFIC CONTROL (25% OF SUBTOTAL A)			25.0%	24,300
	DUST PALLIATIVE (0% OF SUBTOTAL A)(INCLUDED IN FURNISH WATER)			0.0%	0
	QUALITY CONTROL (1% OF SUBTOTAL A)			1.0%	1,000
	CONSTRUCTION SURVEYING (1.5% OF SUBTOTAL A)			1.5%	1,500
	EROSION CONTROL (1% OF SUBTOTAL A)			1.0%	1,000
	MOBILIZATION (8% OF SUBTOTAL A)			8.0%	7,800
	UNIDENTIFIED ITEMS (20% OF SUBTOTAL A)			20.0%	19,400
	SUBTOTAL B (SUBTOTAL A + PROJECT WIDE)				**$152,150**
OTHER PROJ	**OTHER PROJECT COSTS**				
	DPS TRAFFIC CONTROL				0
	JOINT PROJECT AGREEMENT ITEMS				0
	CONTRACTOR INCENTIVES				0
	ENVIRONMENTAL MITIGATION				0
	PRESENT YEAR CONSTRUCTION BID COST (EXCLUDING UTILITIES & R/W)				**$152,150**
INFL	**INFLATION AND BELOW THE LINE ITEMS**				
	LABOR AND MATERIAL INFLATION TO CONSTRUCTION YEAR 20xx (X%/YR)			**NOT INCLUDED**	0
	POST DESIGN SERVICES (1% OF SUBTOTAL A)			1.0%	1,500
	CONSTRUCTION CONTINGENCIES (5% OF SUBTOTAL A)			5.0%	7,600
	CONSTRUCTION ENGINEERING (8% OF SUBTOTAL A)			8.0%	12,200
	INDIRECT COST ALLOCATION (9.9% OF SUBTOTAL B + OTHER PROJECT COSTS)			9.90%	17,172
	DEPARTMENT CONSTRUCTION COST (EXCLUDING UTILITIES & R/W)				**$190,622**
DES	**PREDESIGN AND FINAL DESIGN**				
	PREDESIGN/NEPA/PI SERVICES (3% OF CONSTRUCTION YEAR COST)			3.0%	4,565
	FINAL DESIGN SERVICES (8% OF CONSTRUCTION YEAR COST)			8.0%	12,172
	INDIRECT COST ALLOCATION (9.9% OF ALL DESIGN COSTS)			9.90%	1,657
	TOTAL ESTIMATED DESIGN COST				**$18,394**
UTIL	**UTILITY RELOCATION**				
	PRIOR RIGHT UTILITY RELOCATIONS & SERVICE AGREEMENTS				0
	INDIRECT COST ALLOCATION (9.9% OF ALL UTILITY COSTS)			9.90%	0
	UTILITY RELOCATION COST INFLATION TO CONSTRUCTION YEAR 20xx (X%/YR)			1.00	0
	TOTAL ESTIMATED UTILITY COST				**$0**
R/W	**RIGHT-OF-WAY**				
	RIGHT-OF-WAY	L. SUM			0
	INDIRECT COST ALLOCATION (9.9% OF ALL RIGHT-OF-WAY COSTS)			9.90%	0
	RIGHT-OF-WAY PRICE ESCALATION TO ACQUISITION YEAR 20xx (X%/YR)			1	0
	RIGHT-OF-WAY COSTS				**$0**
	TOTAL ESTIMATED PROJECT COST				**$209,016**

ARIZONA DEPARTMENT OF TRANSPORTATION
CONSTRUCTION COST ESTIMATE SUMMARY

ROUTE: SR-101L
SEGMENT: US 60/SR-101L
LENGTH: 0.05 Miles **TRACS NO.:** N/A
PROJECT DESCRIPTION: Cost Estimate
ESTIMATE LEVEL: Level 0
DATE: 6/15/19

ITEM	MAJOR ITEM DESCRIPTION	UNIT	QUANTITY	UNIT COST	TOTAL COST
200	**EARTHWORK**				
	CLEARING & REMOVALS	L.SUM	1	$ 20,000.00	20,000
	ROADWAY EXCAVATION	CU.YD.		$ 12.00	
	DRAINAGE EXCAVATION	CU.YD.		$ 15.00	
	BORROW	CU.YD.		$ 20.00	
	SUBGRADE TREATMENT	SQ.YD.		$ 15.00	
	FURNISH WATER	L.SUM			
	MISCELLANEOUS ITEMS	L.SUM			
	TOTAL ITEM 200				20,000
300 & 400	**BASE AND SURFACE TREATMENT**				
	AGGREGATE BASE	CU.YD.	80	$ 45.00	3,600
	CONCRETE PAVEMENT	SQ.YD.		$ 70.00	
	ASPHALT PAVEMENT	SQ.YD.	340	$ 45.00	15,300
	ARAC SURFACE	SQ.YD.		$ 6.00	
	MILLING & OVERLAY	SQ.YD.		$ 16.00	
	MISCELLANEOUS ITEMS	L.SUM			
	TOTAL ITEM 300 & 400				18,900
500	**DRAINAGE**				
	DRAINAGE SYSTEM (CLOSED)	L.FT.	20	$ 270.00	5,400
	DRAINAGE SYSTEM (OPEN)	L.FT.		$ 150.00	
	DRAINAGE SYSTEM (CONVEYANCE CHANNEL)	L.FT.		$ 650.00	
	PUMP STATION (NEW)	EACH		$ 2,500,000.00	
	PIPE CULVERTS	L.FT.		$ 430.00	
	MISCELLANEOUS ITEMS	L.SUM			
	TOTAL ITEM 500				5,400
600	**STRUCTURES**				
	FLYOVER RAMP (NEW SYSTEM TI)	SQ.FT.		$ 135.00	
	FLYOVER HOV RAMP	SQ.FT.		$ 175.00	
	OVERPASS TI BRIDGE	SQ.FT.		$ 140.00	
	RIVER CROSSING BRIDGE	SQ.FT.		$ 145.00	
	PEDESTRIAN BRIDGE	SQ.FT.		$ 180.00	
	BRIDGE WIDENING	SQ.FT.		$ 160.00	
	BRIDGE REHABILITATION	SQ.FT.		$ 100.00	
	BOX CULVERT	L.FT./CELL		$ 1,330.00	
	SIGN STRUCTURES	EACH	1	$ 100,000.00	100,000
	ITS STRUCTURE AND PANEL	EACH		$ 200,000.00	
	O&M CROSSING	EACH		$ 350,000.00	
	MISCELLANEOUS ITEMS	L.SUM			
	TOTAL ITEM 600				100,000
700	**TRAFFIC ENGINEERING**				
	SIGNING (FREEWAY)	MILE/DIR		$ 35,000.00	
	SIGNING (STREET)	MILE	0.20	$ 64,000.00	12,800
	PAVEMENT MARKING	LANE-MILE	0.20	$ 5,000.00	1,000
	LIGHTING	MILE	0.05	$ 375,000.00	18,750
	TRAFFIC SIGNAL	EACH		$ 200,000.00	
	INTELLIGENT TRANSPORTATION SYSTEM (ITS)	MILE		$ 525,000.00	
	MISCELLANEOUS ITEMS	L.SUM	1	$ 50,000.00	50,000
	TOTAL ITEM 700				82,550
800	**ROADSIDE DEVELOPMENT**				
	LANDSCAPING AND TOPSOIL	SQ.YD.		$ 15.00	
	UTILITY RELOCATION	L.SUM			
	MISCELLANEOUS ITEMS	L.SUM			
	TOTAL ITEM 800				0
900	**INCIDENTALS**				
	RETAINING WALLS	SQ.FT.		$ 75.00	
	SOUND WALLS	SQ.FT.		$ 40.00	
	ROADWAY APPURTENANCES	L.SUM	1	$ 30,000.00	30,000
	ADA IMPROVEMENTS	EACH	2	$ 3,000.00	6,000
	TRANSIT APPURTENANCES	L.SUM			
	RAILROAD ACCOMMODATIONS	L.SUM			
	MISCELLANEOUS ITEMS	L.SUM			
	TOTAL ITEM 900				36,000
	SUBTOTAL A (ITEM SUBTOTAL)				**$262,850**

ARIZONA DEPARTMENT OF TRANSPORTATION
CONSTRUCTION COST ESTIMATE SUMMARY

ROUTE: SR-101L
SEGMENT: US 60/SR-101L
LENGTH: 0.05 Miles **TRACS NO.:** N/A
PROJECT DESCRIPTION: Cost Estimate
ESTIMATE LEVEL: Level 0
DATE: 6/15/19

ITEM	MAJOR ITEM DESCRIPTION	UNIT	QUANTITY	UNIT COST	TOTAL COST
PW	**PROJECT WIDE**				
	TRAFFIC CONTROL (8% OF SUBTOTAL A)			8.0%	21,000
	DUST PALLIATIVE (0% OF SUBTOTAL A)(INCLUDED IN FURNISH WATER)			0.0%	0
	QUALITY CONTROL (1% OF SUBTOTAL A)			1.0%	2,600
	CONSTRUCTION SURVEYING (1.5% OF SUBTOTAL A)			1.5%	3,900
	EROSION CONTROL (1% OF SUBTOTAL A)			1.0%	2,600
	MOBILIZATION (8% OF SUBTOTAL A)			8.0%	21,000
	UNIDENTIFIED ITEMS (20% OF SUBTOTAL A)			20.0%	52,600
	SUBTOTAL B (SUBTOTAL A + PROJECT WIDE)				**$366,550**
OTHER PROJ	**OTHER PROJECT COSTS**				
	DPS TRAFFIC CONTROL				0
	JOINT PROJECT AGREEMENT ITEMS				0
	CONTRACTOR INCENTIVES				0
	ENVIRONMENTAL MITIGATION				0
	PRESENT YEAR CONSTRUCTION BID COST (EXCLUDING UTILITIES & R/W)				**$366,550**
INFL	**INFLATION AND BELOW THE LINE ITEMS**				
	LABOR AND MATERIAL INFLATION TO CONSTRUCTION YEAR 20xx (X%/YR)			**NOT INCLUDED**	0
	POST DESIGN SERVICES (1% OF SUBTOTAL A)			1.0%	3,700
	CONSTRUCTION CONTINGENCIES (5% OF SUBTOTAL A)			5.0%	18,300
	CONSTRUCTION ENGINEERING (8% OF SUBTOTAL A)			8.0%	29,300
	INDIRECT COST ALLOCATION (9.9% OF SUBTOTAL B + OTHER PROJECT COSTS)			9.90%	41,367
	DEPARTMENT CONSTRUCTION COST (EXCLUDING UTILITIES & R/W)				**$459,217**
DES	**PREDESIGN AND FINAL DESIGN**				
	PREDESIGN/NEPA/PI SERVICES (3% OF CONSTRUCTION YEAR COST)			3.0%	10,997
	FINAL DESIGN SERVICES (8% OF CONSTRUCTION YEAR COST)			8.0%	29,324
	INDIRECT COST ALLOCATION (9.9% OF ALL DESIGN COSTS)			9.90%	3,992
	TOTAL ESTIMATED DESIGN COST				**$44,313**
UTIL	**UTILITY RELOCATION**				
	PRIOR RIGHT UTILITY RELOCATIONS & SERVICE AGREEMENTS				0
	INDIRECT COST ALLOCATION (9.9% OF ALL UTILITY COSTS)			9.90%	0
	UTILITY RELOCATION COST INFLATION TO CONSTRUCTION YEAR 20xx (X%/YR)			1.00	0
	TOTAL ESTIMATED UTILITY COST				**$0**
R/W	**RIGHT-OF-WAY**				
	RIGHT-OF-WAY	L. SUM			0
	INDIRECT COST ALLOCATION (9.9% OF ALL RIGHT-OF-WAY COSTS)			9.90%	0
	RIGHT-OF-WAY PRICE ESCALATION TO ACQUISITION YEAR 20xx (X%/YR)			1	0
	RIGHT-OF-WAY COSTS				**$0**
	TOTAL ESTIMATED PROJECT COST				**$503,530**

ARIZONA DEPARTMENT OF TRANSPORTATION
CONSTRUCTION COST ESTIMATE SUMMARY

ROUTE: SR-101L
SEGMENT: Peoria Ave TI
LENGTH: 0.4 Miles **TRACS NO.:** N/A

PROJECT DESCRIPTION: Cost Estimate
ESTIMATE LEVEL: Level 0
DATE: 6/15/19

ITEM	MAJOR ITEM DESCRIPTION	UNIT	QUANTITY	UNIT COST	TOTAL COST
200	**EARTHWORK**				
	CLEARING & REMOVALS	L.SUM	1	$ 300,000.00	300,000
	ROADWAY EXCAVATION	CU.YD.		$ 12.00	
	DRAINAGE EXCAVATION	CU.YD.		$ 15.00	
	BORROW	CU.YD.		$ 20.00	
	SUBGRADE TREATMENT	SQ.YD.		$ 15.00	
	FURNISH WATER	L.SUM			
	MISCELLANEOUS ITEMS	L.SUM			
	TOTAL ITEM 200				300,000
300 & 400	**BASE AND SURFACE TREATMENT**				
	AGGREGATE BASE	CU.YD.	2,800	$ 45.00	126,000
	CONCRETE PAVEMENT	SQ.YD.		$ 70.00	
	ASPHALT PAVEMENT	SQ.YD.	12,570	$ 45.00	565,650
	ARAC SURFACE	SQ.YD.		$ 6.00	
	MILLING & OVERLAY	SQ.YD.		$ 16.00	
	MISCELLANEOUS ITEMS	L.SUM			
	TOTAL ITEM 300 & 400				691,650
500	**DRAINAGE**				
	DRAINAGE SYSTEM (CLOSED)	L.FT.	1,500	$ 270.00	405,000
	DRAINAGE SYSTEM (OPEN)	L.FT.		$ 150.00	
	DRAINAGE SYSTEM (CONVEYANCE CHANNEL)	L.FT.		$ 650.00	
	PUMP STATION (NEW)	EACH		$ 2,500,000.00	
	PIPE CULVERTS	L.FT.		$ 430.00	
	MISCELLANEOUS ITEMS	L.SUM			
	TOTAL ITEM 500				405,000
600	**STRUCTURES**				
	FLYOVER RAMP (NEW SYSTEM TI)	SQ.FT.		$ 135.00	
	FLYOVER HOV RAMP	SQ.FT.		$ 175.00	
	OVERPASS TI BRIDGE	SQ.FT.		$ 140.00	
	RIVER CROSSING BRIDGE	SQ.FT.		$ 145.00	
	PEDESTRIAN BRIDGE	SQ.FT.		$ 180.00	
	BRIDGE WIDENING	SQ.FT.		$ 160.00	
	BRIDGE REHABILITATION	SQ.FT.		$ 100.00	
	BOX CULVERT	L.FT./CELL		$ 1,330.00	
	SIGN STRUCTURES	EACH		$ 100,000.00	
	ITS STRUCTURE AND PANEL	EACH		$ 200,000.00	
	O&M CROSSING	EACH		$ 350,000.00	
	MISCELLANEOUS ITEMS	L.SUM	1	$ 750,000.00	750,000
	TOTAL ITEM 600				750,000
700	**TRAFFIC ENGINEERING**				
	SIGNING (FREEWAY)	MILE/DIR		$ 35,000.00	
	SIGNING (STREET)	MILE	0.50	$ 64,000.00	32,000
	PAVEMENT MARKING	LANE-MILE	2.00	$ 5,000.00	10,000
	LIGHTING	MILE	0.50	$ 375,000.00	187,500
	TRAFFIC SIGNAL	EACH	2	$ 200,000.00	400,000
	INTELLIGENT TRANSPORTATION SYSTEM (ITS)	MILE		$ 525,000.00	
	MISCELLANEOUS ITEMS	L.SUM	1	$ 25,000.00	25,000
	TOTAL ITEM 700				654,500
800	**ROADSIDE DEVELOPMENT**				
	LANDSCAPING AND TOPSOIL	SQ.YD.		$ 15.00	
	UTILITY RELOCATION	L.SUM			
	MISCELLANEOUS ITEMS	L.SUM			
	TOTAL ITEM 800				0
900	**INCIDENTALS**				
	RETAINING WALLS	SQ.FT.	9,280	$ 75.00	696,000
	SOUND WALLS	SQ.FT.		$ 40.00	
	ROADWAY APPURTENANCES	L.SUM	1	$ 300,000.00	300,000
	ADA IMPROVEMENTS	EACH	4	$ 3,000.00	12,000
	TRANSIT APPURTENANCES	L.SUM			
	RAILROAD ACCOMMODATIONS	L.SUM			
	MISCELLANEOUS ITEMS	L.SUM			
	TOTAL ITEM 900				1,008,000
	SUBTOTAL A (ITEM SUBTOTAL)				**$3,809,150**

ARIZONA DEPARTMENT OF TRANSPORTATION
CONSTRUCTION COST ESTIMATE SUMMARY

ROUTE: SR-101L
SEGMENT: Peoria Ave TI
LENGTH: 0.4 Miles **TRACS NO.:** N/A
PROJECT DESCRIPTION: Cost Estimate
ESTIMATE LEVEL: Level 0
DATE: 6/15/19

ITEM	MAJOR ITEM DESCRIPTION	UNIT	QUANTITY	UNIT COST	TOTAL COST
PW	**PROJECT WIDE**				
	TRAFFIC CONTROL (8% OF SUBTOTAL A)			8.0%	304,700
	DUST PALLIATIVE (0% OF SUBTOTAL A)(INCLUDED IN FURNISH WATER)			0.0%	0
	QUALITY CONTROL (1% OF SUBTOTAL A)			1.0%	38,100
	CONSTRUCTION SURVEYING (1.5% OF SUBTOTAL A)			1.5%	57,100
	EROSION CONTROL (1% OF SUBTOTAL A)			1.0%	38,100
	MOBILIZATION (8% OF SUBTOTAL A)			8.0%	304,700
	UNIDENTIFIED ITEMS (20% OF SUBTOTAL A)			20.0%	761,800
	SUBTOTAL B (SUBTOTAL A + PROJECT WIDE)				**$5,313,650**
OTHER PROJ	**OTHER PROJECT COSTS**				
	DPS TRAFFIC CONTROL				0
	JOINT PROJECT AGREEMENT ITEMS				0
	CONTRACTOR INCENTIVES				0
	ENVIRONMENTAL MITIGATION				0
	PRESENT YEAR CONSTRUCTION BID COST (EXCLUDING UTILITIES & R/W)				**$5,313,650**
INFL	**INFLATION AND BELOW THE LINE ITEMS**				
	LABOR AND MATERIAL INFLATION TO CONSTRUCTION YEAR 20xx (X%/YR)			**NOT INCLUDED**	0
	POST DESIGN SERVICES (1% OF SUBTOTAL A)			1.0%	53,100
	CONSTRUCTION CONTINGENCIES (5% OF SUBTOTAL A)			5.0%	265,700
	CONSTRUCTION ENGINEERING (8% OF SUBTOTAL A)			8.0%	425,100
	INDIRECT COST ALLOCATION (9.9% OF SUBTOTAL B + OTHER PROJECT COSTS)			9.90%	599,697
	DEPARTMENT CONSTRUCTION COST (EXCLUDING UTILITIES & R/W)				**$6,657,247**
DES	**PREDESIGN AND FINAL DESIGN**				
	PREDESIGN/NEPA/PI SERVICES (3% OF CONSTRUCTION YEAR COST)			3.0%	159,410
	FINAL DESIGN SERVICES (8% OF CONSTRUCTION YEAR COST)			8.0%	425,092
	INDIRECT COST ALLOCATION (9.9% OF ALL DESIGN COSTS)			9.90%	57,866
	TOTAL ESTIMATED DESIGN COST				**$642,368**
UTIL	**UTILITY RELOCATION**				
	PRIOR RIGHT UTILITY RELOCATIONS & SERVICE AGREEMENTS				0
	INDIRECT COST ALLOCATION (9.9% OF ALL UTILITY COSTS)			9.90%	0
	UTILITY RELOCATION COST INFLATION TO CONSTRUCTION YEAR 20xx (X%/YR)			1.00	0
	TOTAL ESTIMATED UTILITY COST				**$0**
R/W	**RIGHT-OF-WAY**				
	RIGHT-OF-WAY	L. SUM			0
	INDIRECT COST ALLOCATION (9.9% OF ALL RIGHT-OF-WAY COSTS)			9.90%	0
	RIGHT-OF-WAY PRICE ESCALATION TO ACQUISITION YEAR 20xx (X%/YR)			1	0
	RIGHT-OF-WAY COSTS				**$0**
	TOTAL ESTIMATED PROJECT COST				**$7,299,615**

ARIZONA DEPARTMENT OF TRANSPORTATION
CONSTRUCTION COST ESTIMATE SUMMARY

ROUTE: US-60/Grand Avenue
SEGMENT: 91st Avenue: Grand Ave Thru-Turns
LENGTH: 0.5 Miles **TRACS NO.:** N/A
PROJECT DESCRIPTION: Phase 1 Cost Estimate
ESTIMATE LEVEL: Level 0
DATE: 6/14/19

ITEM	MAJOR ITEM DESCRIPTION	UNIT	QUANTITY	UNIT COST	TOTAL COST
200	**EARTHWORK**				
	CLEARING & REMOVALS	L.SUM	1	$ 250,000.00	250,000
	ROADWAY EXCAVATION	CU.YD.		$ 12.00	
	DRAINAGE EXCAVATION	CU.YD.		$ 15.00	
	BORROW	CU.YD.		$ 20.00	
	SUBGRADE TREATMENT	SQ.YD.		$ 15.00	
	FURNISH WATER	L.SUM			
	MISCELLANEOUS ITEMS	L.SUM			
	TOTAL ITEM 200				250,000
300 & 400	**BASE AND SURFACE TREATMENT**				
	AGGREGATE BASE	CU.YD.	6,500	$ 45.00	292,500
	CONCRETE PAVEMENT	SQ.YD.		$ 70.00	
	ASPHALT PAVEMENT	SQ.YD.	29,120	$ 45.00	1,310,400
	ARAC SURFACE	SQ.YD.		$ 6.00	
	MILLING & OVERLAY	SQ.YD.		$ 16.00	
	MISCELLANEOUS ITEMS	L.SUM			
	TOTAL ITEM 300 & 400				1,602,900
500	**DRAINAGE**				
	DRAINAGE SYSTEM (CLOSED)	L.FT.	1,000	$ 270.00	270,000
	DRAINAGE SYSTEM (OPEN)	L.FT.		$ 150.00	
	DRAINAGE SYSTEM (CONVEYANCE CHANNEL)	L.FT.		$ 650.00	
	PUMP STATION (NEW)	EACH		$ 2,500,000.00	
	PIPE CULVERTS	L.FT.		$ 430.00	
	MISCELLANEOUS ITEMS	L.SUM			
	TOTAL ITEM 500				270,000
600	**STRUCTURES**				
	FLYOVER RAMP (NEW SYSTEM TI)	SQ.FT.		$ 135.00	
	FLYOVER HOV RAMP	SQ.FT.		$ 175.00	
	OVERPASS TI BRIDGE	SQ.FT.		$ 140.00	
	RIVER CROSSING BRIDGE	SQ.FT.		$ 145.00	
	PEDESTRIAN BRIDGE	SQ.FT.		$ 180.00	
	BRIDGE WIDENING	SQ.FT.		$ 160.00	
	BRIDGE REHABILITATION	SQ.FT.		$ 100.00	
	BOX CULVERT	L.FT./CELL		$ 1,330.00	
	SIGN STRUCTURES	EACH		$ 100,000.00	
	ITS STRUCTURE AND PANEL	EACH		$ 200,000.00	
	O&M CROSSING	EACH		$ 350,000.00	
	MISCELLANEOUS ITEMS	L.SUM			
	TOTAL ITEM 600				0
700	**TRAFFIC ENGINEERING**				
	SIGNING (FREEWAY)	MILE/DIR		$ 35,000.00	
	SIGNING (STREET)	MILE	1.00	$ 64,000.00	64,000
	PAVEMENT MARKING	LANE-MILE	7.10	$ 5,000.00	35,500
	LIGHTING	MILE	0.25	$ 375,000.00	93,750
	TRAFFIC SIGNAL	EACH	3	$ 200,000.00	600,000
	INTELLIGENT TRANSPORTATION SYSTEM (ITS)	MILE		$ 525,000.00	
	MISCELLANEOUS ITEMS	L.SUM			
	TOTAL ITEM 700				793,250
800	**ROADSIDE DEVELOPMENT**				
	LANDSCAPING AND TOPSOIL	SQ.YD.		$ 15.00	
	UTILITY RELOCATION	L.SUM			
	MISCELLANEOUS ITEMS	L.SUM			
	TOTAL ITEM 800				0
900	**INCIDENTALS**				
	RETAINING WALLS	SQ.FT.		$ 75.00	
	SOUND WALLS	SQ.FT.		$ 40.00	
	ROADWAY APPURTENANCES	L.SUM	1	$ 550,000.00	550,000
	ADA IMPROVEMENTS	EACH	2	$ 3,000.00	6,000
	TRANSIT APPURTENANCES	L.SUM			
	RAILROAD ACCOMMODATIONS	L.SUM			
	MISCELLANEOUS ITEMS	L.SUM			
	TOTAL ITEM 900				556,000
	SUBTOTAL A (ITEM SUBTOTAL)				**$3,472,150**

ARIZONA DEPARTMENT OF TRANSPORTATION
CONSTRUCTION COST ESTIMATE SUMMARY

ROUTE: US-60/Grand Avenue
SEGMENT: 91st Avenue: Grand Ave Thru-Turns
LENGTH: 0.5 Miles **TRACS NO.:** N/A
PROJECT DESCRIPTION: Phase 1 Cost Estimate
ESTIMATE LEVEL: Level 0
DATE: 6/14/19

ITEM	MAJOR ITEM DESCRIPTION	UNIT	QUANTITY	UNIT COST	TOTAL COST
PW	**PROJECT WIDE**				
	TRAFFIC CONTROL (8% OF SUBTOTAL A)			8.0%	277,800
	DUST PALLIATIVE (0% OF SUBTOTAL A)(INCLUDED IN FURNISH WATER)			0.0%	0
	QUALITY CONTROL (1% OF SUBTOTAL A)			1.0%	34,700
	CONSTRUCTION SURVEYING (1.5% OF SUBTOTAL A)			1.5%	52,100
	EROSION CONTROL (1% OF SUBTOTAL A)			1.0%	34,700
	MOBILIZATION (8% OF SUBTOTAL A)			8.0%	277,800
	UNIDENTIFIED ITEMS (20% OF SUBTOTAL A)			20.0%	694,400
	SUBTOTAL B (SUBTOTAL A + PROJECT WIDE)				**$4,843,650**
OTHER PROJ	**OTHER PROJECT COSTS**				
	DPS TRAFFIC CONTROL				0
	JOINT PROJECT AGREEMENT ITEMS				0
	CONTRACTOR INCENTIVES				0
	ENVIRONMENTAL MITIGATION				0
	PRESENT YEAR CONSTRUCTION BID COST (EXCLUDING UTILITIES & R/W)				**$4,843,650**
INFL	**INFLATION AND BELOW THE LINE ITEMS**				
	LABOR AND MATERIAL INFLATION TO CONSTRUCTION YEAR 20xx (X%/YR)			**NOT INCLUDED**	0
	POST DESIGN SERVICES (1% OF SUBTOTAL A)			1.0%	48,400
	CONSTRUCTION CONTINGENCIES (5% OF SUBTOTAL A)			5.0%	242,200
	CONSTRUCTION ENGINEERING (8% OF SUBTOTAL A)			8.0%	387,500
	INDIRECT COST ALLOCATION (9.9% OF SUBTOTAL B + OTHER PROJECT COSTS)			9.90%	546,653
	DEPARTMENT CONSTRUCTION COST (EXCLUDING UTILITIES & R/W)				**$6,068,403**
DES	**PREDESIGN AND FINAL DESIGN**				
	PREDESIGN/NEPA/PI SERVICES (3% OF CONSTRUCTION YEAR COST)			3.0%	145,310
	FINAL DESIGN SERVICES (8% OF CONSTRUCTION YEAR COST)			8.0%	387,492
	INDIRECT COST ALLOCATION (9.9% OF ALL DESIGN COSTS)			9.90%	52,747
	TOTAL ESTIMATED DESIGN COST				**$585,549**
UTIL	**UTILITY RELOCATION**				
	PRIOR RIGHT UTILITY RELOCATIONS & SERVICE AGREEMENTS		1	100,000	100,000
	INDIRECT COST ALLOCATION (9.9% OF ALL UTILITY COSTS)			9.90%	9,900
	UTILITY RELOCATION COST INFLATION TO CONSTRUCTION YEAR 20xx (X%/YR)			1.00	0
	TOTAL ESTIMATED UTILITY COST				**$109,900**
R/W	**RIGHT-OF-WAY**				
	RIGHT-OF-WAY	L. SUM	1	750,000	750,000
	INDIRECT COST ALLOCATION (9.9% OF ALL RIGHT-OF-WAY COSTS)			9.90%	74,250
	RIGHT-OF-WAY PRICE ESCALATION TO ACQUISITION YEAR 20xx (X%/YR)			1	0
	RIGHT-OF-WAY COSTS				**$824,250**
	TOTAL ESTIMATED PROJECT COST				**$7,588,102**

ARIZONA DEPARTMENT OF TRANSPORTATION
CONSTRUCTION COST ESTIMATE SUMMARY

ROUTE: US-60/Grand Avenue
SEGMENT: 91st Ave Improvements
LENGTH: 0.7 Miles **TRACS NO.:** N/A
PROJECT DESCRIPTION: Phase 1 Cost Estimate
ESTIMATE LEVEL: Level 0
DATE: 6/14/19

ITEM	MAJOR ITEM DESCRIPTION	UNIT	QUANTITY	UNIT COST	TOTAL COST
200	**EARTHWORK**				
	CLEARING & REMOVALS	L.SUM	1	$ 400,000.00	400,000
	ROADWAY EXCAVATION	CU.YD.		$ 12.00	
	DRAINAGE EXCAVATION	CU.YD.		$ 15.00	
	BORROW	CU.YD.		$ 20.00	
	SUBGRADE TREATMENT	SQ.YD.		$ 15.00	
	FURNISH WATER	L.SUM			
	MISCELLANEOUS ITEMS	L.SUM			
	TOTAL ITEM 200				400,000
300 & 400	**BASE AND SURFACE TREATMENT**				
	AGGREGATE BASE	CU.YD.	5,500	$ 45.00	247,500
	CONCRETE PAVEMENT	SQ.YD.		$ 70.00	
	ASPHALT PAVEMENT	SQ.YD.	24,590	$ 45.00	1,106,550
	ARAC SURFACE	SQ.YD.		$ 6.00	
	MILLING & OVERLAY	SQ.YD.		$ 16.00	
	MISCELLANEOUS ITEMS	L.SUM			
	TOTAL ITEM 300 & 400				1,354,050
500	**DRAINAGE**				
	DRAINAGE SYSTEM (CLOSED)	L.FT.	1,600	$ 270.00	432,000
	DRAINAGE SYSTEM (OPEN)	L.FT.		$ 150.00	
	DRAINAGE SYSTEM (CONVEYANCE CHANNEL)	L.FT.		$ 650.00	
	PUMP STATION (NEW)	EACH		$ 2,500,000.00	
	PIPE CULVERTS	L.FT.		$ 430.00	
	MISCELLANEOUS ITEMS	L.SUM			
	TOTAL ITEM 500				432,000
600	**STRUCTURES**				
	FLYOVER RAMP (NEW SYSTEM TI)	SQ.FT.		$ 135.00	
	FLYOVER HOV RAMP	SQ.FT.		$ 175.00	
	OVERPASS TI BRIDGE	SQ.FT.		$ 140.00	
	RIVER CROSSING BRIDGE	SQ.FT.		$ 145.00	
	PEDESTRIAN BRIDGE	SQ.FT.		$ 180.00	
	BRIDGE WIDENING	SQ.FT.		$ 160.00	
	BRIDGE REHABILITATION	SQ.FT.		$ 100.00	
	BOX CULVERT	L.FT./CELL		$ 1,330.00	
	SIGN STRUCTURES	EACH		$ 100,000.00	
	ITS STRUCTURE AND PANEL	EACH		$ 200,000.00	
	O&M CROSSING	EACH		$ 350,000.00	
	MISCELLANEOUS ITEMS	L.SUM			
	TOTAL ITEM 600				0
700	**TRAFFIC ENGINEERING**				
	SIGNING (FREEWAY)	MILE/DIR		$ 35,000.00	
	SIGNING (STREET)	MILE	2.00	$ 64,000.00	128,000
	PAVEMENT MARKING	LANE-MILE	11.20	$ 5,000.00	56,000
	LIGHTING	MILE	1.00	$ 375,000.00	375,000
	TRAFFIC SIGNAL	EACH	2	$ 200,000.00	400,000
	INTELLIGENT TRANSPORTATION SYSTEM (ITS)	MILE		$ 525,000.00	
	MISCELLANEOUS ITEMS	L.SUM			
	TOTAL ITEM 700				959,000
800	**ROADSIDE DEVELOPMENT**				
	LANDSCAPING AND TOPSOIL	SQ.YD.		$ 15.00	
	UTILITY RELOCATION	L.SUM			
	MISCELLANEOUS ITEMS	L.SUM			
	TOTAL ITEM 800				0
900	**INCIDENTALS**				
	RETAINING WALLS	SQ.FT.		$ 75.00	
	SOUND WALLS	SQ.FT.		$ 40.00	
	ROADWAY APPURTENANCES	L.SUM	1	$ 1,200,000.00	1,200,000
	ADA IMPROVEMENTS	EACH	6	$ 3,000.00	18,000
	TRANSIT APPURTENANCES	L.SUM			
	RAILROAD ACCOMMODATIONS	L.SUM			
	MISCELLANEOUS ITEMS	L.SUM			
	TOTAL ITEM 900				1,218,000
	SUBTOTAL A (ITEM SUBTOTAL)				**$4,363,050**

ARIZONA DEPARTMENT OF TRANSPORTATION
CONSTRUCTION COST ESTIMATE SUMMARY

ROUTE: US-60/Grand Avenue
SEGMENT: 91st Ave Improvements
LENGTH: 0.7 Miles **TRACS NO.:** N/A
PROJECT DESCRIPTION: Phase 1 Cost Estimate
ESTIMATE LEVEL: Level 0
DATE: 6/14/19

ITEM	MAJOR ITEM DESCRIPTION	UNIT	QUANTITY	UNIT COST	TOTAL COST
PW	**PROJECT WIDE**				
	TRAFFIC CONTROL (8% OF SUBTOTAL A)			8.0%	349,000
	DUST PALLIATIVE (0% OF SUBTOTAL A)(INCLUDED IN FURNISH WATER)			0.0%	0
	QUALITY CONTROL (1% OF SUBTOTAL A)			1.0%	43,600
	CONSTRUCTION SURVEYING (1.5% OF SUBTOTAL A)			1.5%	65,400
	EROSION CONTROL (1% OF SUBTOTAL A)			1.0%	43,600
	MOBILIZATION (8% OF SUBTOTAL A)			8.0%	349,000
	UNIDENTIFIED ITEMS (20% OF SUBTOTAL A)			20.0%	872,600
	SUBTOTAL B (SUBTOTAL A + PROJECT WIDE)				**$6,086,250**
OTHER PROJ	**OTHER PROJECT COSTS**				
	DPS TRAFFIC CONTROL				0
	JOINT PROJECT AGREEMENT ITEMS				0
	CONTRACTOR INCENTIVES				0
	ENVIRONMENTAL MITIGATION				0
	PRESENT YEAR CONSTRUCTION BID COST (EXCLUDING UTILITIES & R/W)				**$6,086,250**
INFL	**INFLATION AND BELOW THE LINE ITEMS**				
	LABOR AND MATERIAL INFLATION TO CONSTRUCTION YEAR 20xx (X%/YR)			**NOT INCLUDED**	0
	POST DESIGN SERVICES (1% OF SUBTOTAL A)			1.0%	60,900
	CONSTRUCTION CONTINGENCIES (5% OF SUBTOTAL A)			5.0%	304,300
	CONSTRUCTION ENGINEERING (8% OF SUBTOTAL A)			8.0%	486,900
	INDIRECT COST ALLOCATION (9.9% OF SUBTOTAL B + OTHER PROJECT COSTS)			9.90%	686,897
	DEPARTMENT CONSTRUCTION COST (EXCLUDING UTILITIES & R/W)				**$7,625,247**
DES	**PREDESIGN AND FINAL DESIGN**				
	PREDESIGN/NEPA/PI SERVICES (3% OF CONSTRUCTION YEAR COST)			3.0%	182,588
	FINAL DESIGN SERVICES (8% OF CONSTRUCTION YEAR COST)			8.0%	486,900
	INDIRECT COST ALLOCATION (9.9% OF ALL DESIGN COSTS)			9.90%	66,279
	TOTAL ESTIMATED DESIGN COST				**$735,767**
UTIL	**UTILITY RELOCATION**				
	PRIOR RIGHT UTILITY RELOCATIONS & SERVICE AGREEMENTS		1	200,000	200,000
	INDIRECT COST ALLOCATION (9.9% OF ALL UTILITY COSTS)			9.90%	19,800
	UTILITY RELOCATION COST INFLATION TO CONSTRUCTION YEAR 20xx (X%/YR)			1.00	0
	TOTAL ESTIMATED UTILITY COST				**$219,800**
R/W	**RIGHT-OF-WAY**				
	RIGHT-OF-WAY	L. SUM	1	1,500,000	1,500,000
	INDIRECT COST ALLOCATION (9.9% OF ALL RIGHT-OF-WAY COSTS)			9.90%	148,500
	RIGHT-OF-WAY PRICE ESCALATION TO ACQUISITION YEAR 20xx (X%/YR)			1	0
	RIGHT-OF-WAY COSTS				**$1,648,500**
	TOTAL ESTIMATED PROJECT COST				**$10,229,314**