GEOMETRY NOT DEFINED!

NEW CASE 19-___

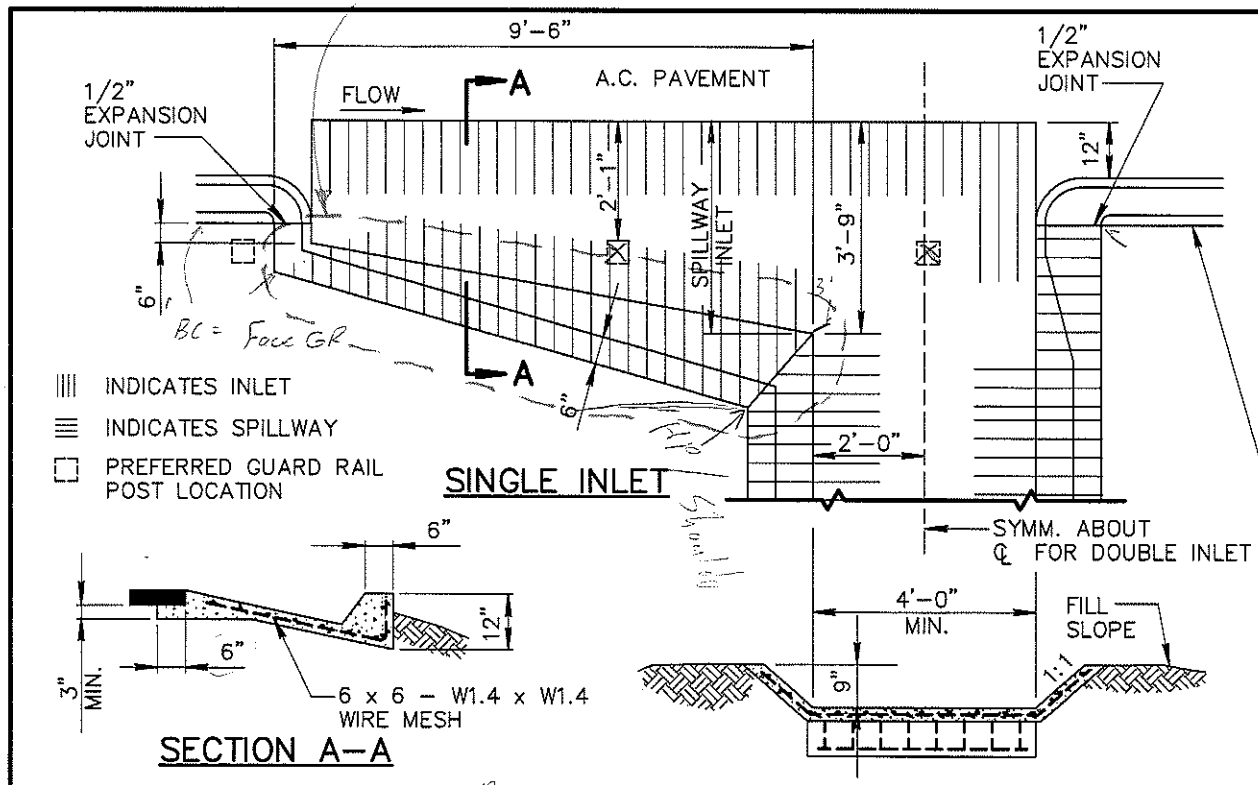

NOTES:

1. WHERE ROCK IS ENCOUNTERED THE OUTLET MAY BE OMITTED.
2. ALL PORTIONS OF SPILLWAY TO BE TROWEL FINISHED.
3. CONCRETE FOR THE SPILLWAY INLET, SPILLWAY AND OUTLET SHALL BE CLASS 'B' PER SECT. 725.
4. WHEN THE OUTLET IS USED, THE WIRE MESH SHALL EXTEND THROUGH THE JOINT INTO THE OUTLET IN LIEU OF BENDING INTO THE KEY.

SECTION A–A

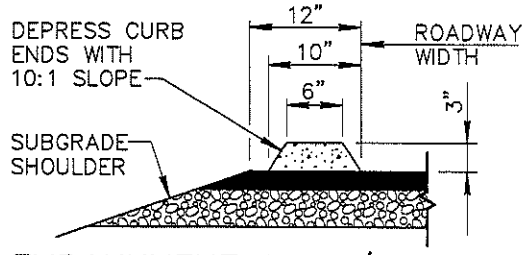

EMBANKMENT CURB/EXTRUDED (OPTIONAL)

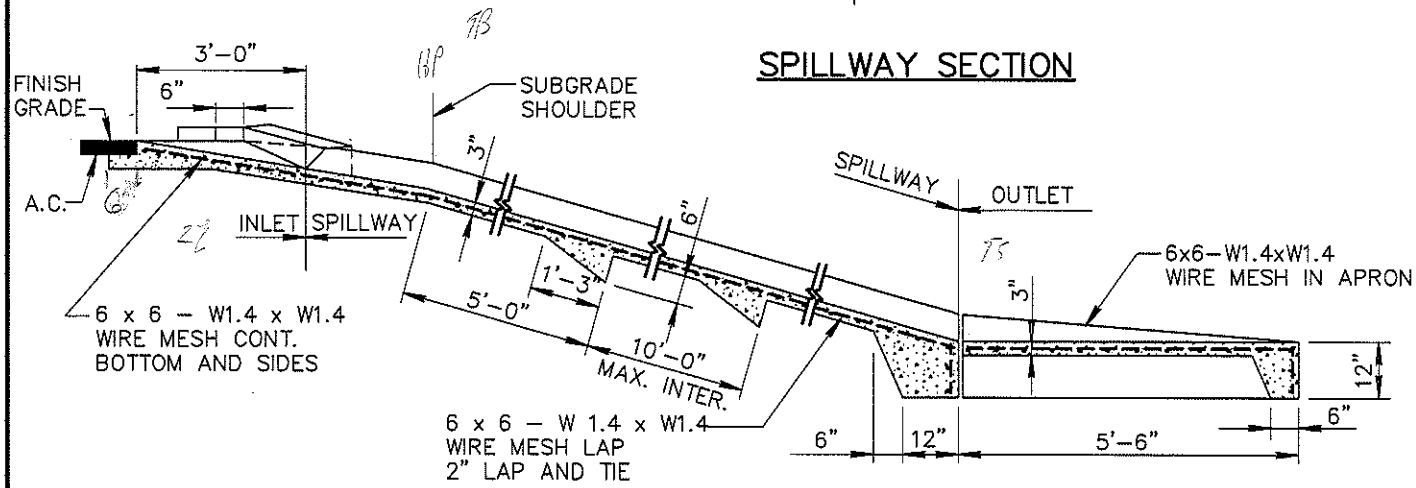

SPILLWAY SECTION

SECTION ON SPILLWAY ℄ DOUBLE INLET

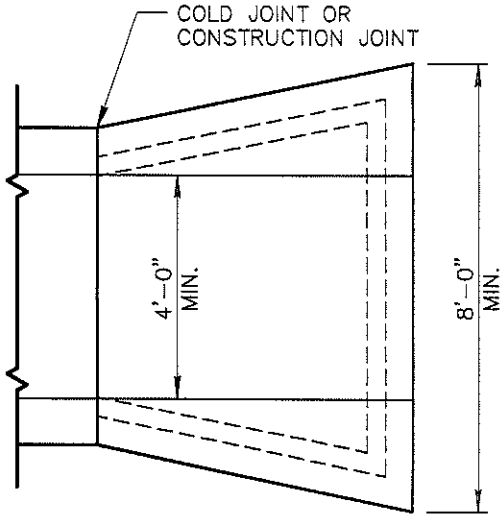

DETAIL NO.				REVISED	DETAIL NO.
550	MARICOPA ASSOCIATION of GOVERNMENTS	STANDARD DETAIL ENGLISH	SPILLWAY INLET AND OUTLET	01-01-1998	550

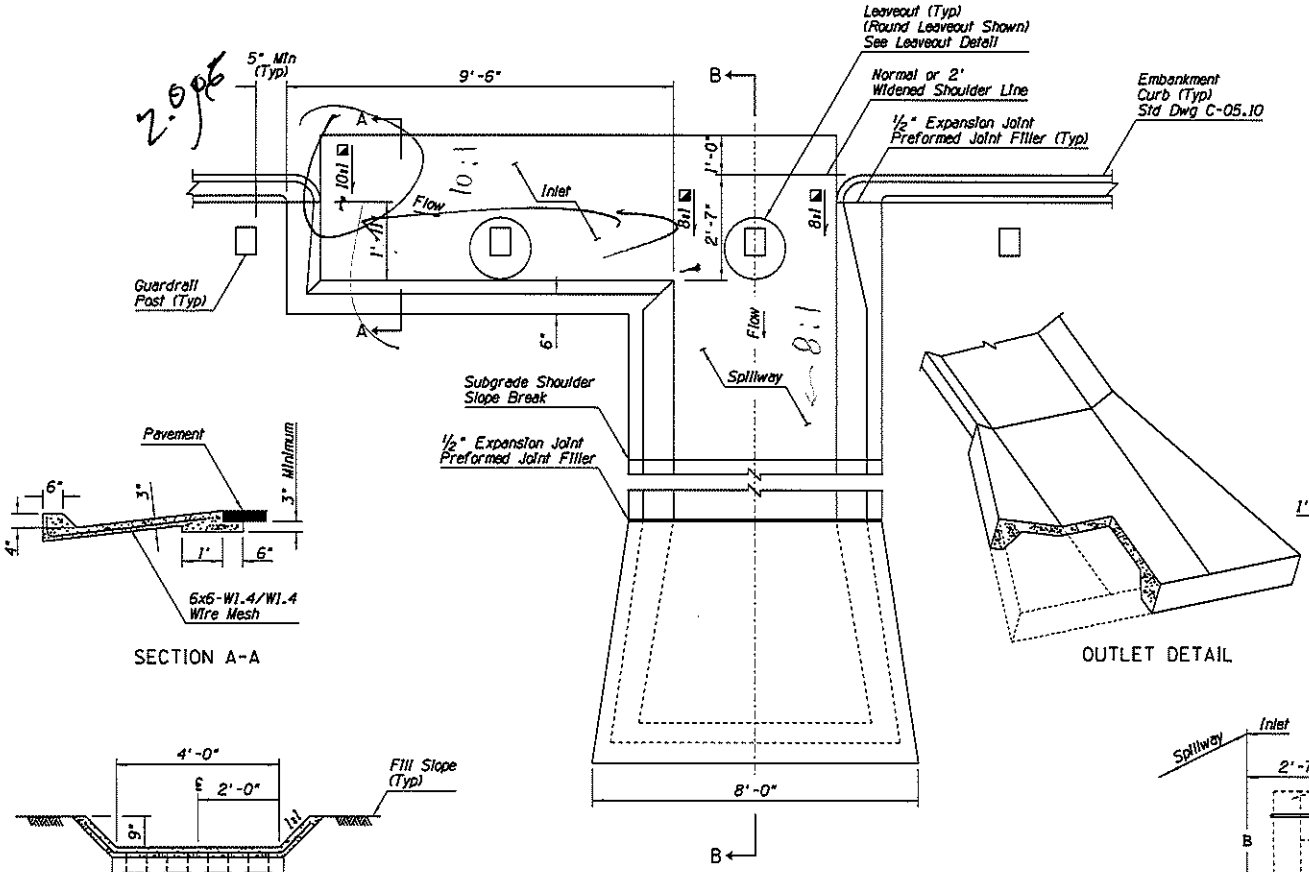

PLAN

SECTION A-A

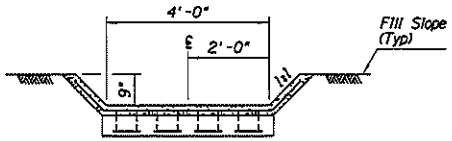

SPILLWAY SECTION

OUTLET DETAIL

GENERAL NOTES

1. Location may be adjusted to accommodate guardrail post layout.
2. All concrete shall be Class B. Embankment curb concrete shall be in accordance with the Std Specs.
3. Where rock is encountered the outlet may be omitted, as approved by the Engineer.
4. When outlet is used, the wire mesh shall extend through the joint into the outlet in lieu of bending into the key.
5. Spillway invert slope shall be uniformly downward from A to B. See Section B-B.
6. See Std Dwg C-04.30 for spillway length.
7. All posts within the inlet shall have a leaveout for the full depth of concrete. Leaveouts shall be filled flush to top of pavement with 3" of CLSM grout having a 28 day compressive strength between 40 and 120 psi.
8. Round all exposed concrete corners.

▨ Transition slopes linearly from edge to center.

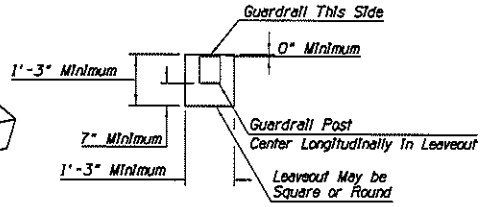

LEAVEOUT DETAIL

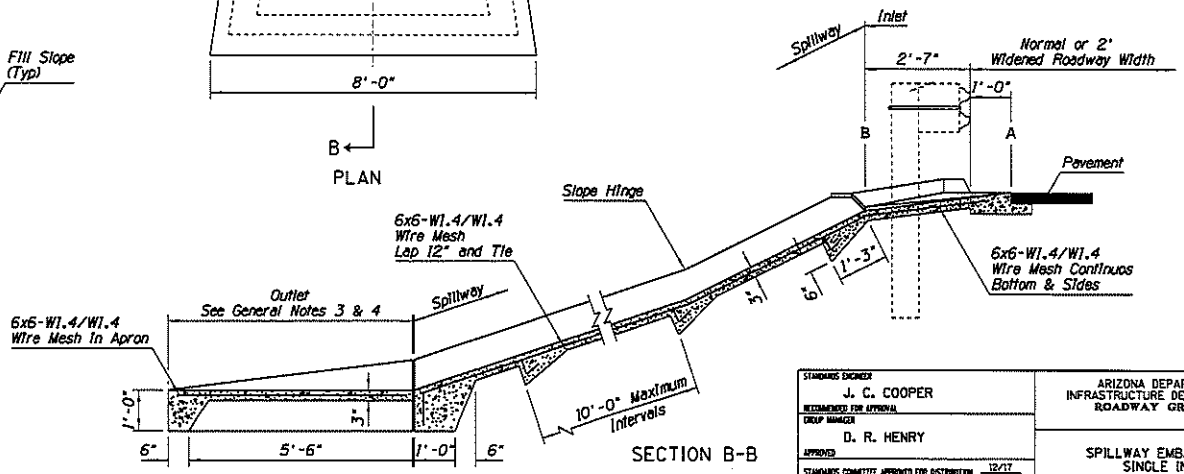

SECTION B-B

STANDARDS ENGINEER J. C. COOPER RECOMMENDED FOR APPROVAL	ARIZONA DEPARTMENT OF TRANSPORTATION INFRASTRUCTURE DELIVERY AND OPERATIONS DIVISION ROADWAY GROUP STANDARD DRAWING
GROUP MANAGER D. R. HENRY APPROVED	SPILLWAY EMBANKMENT SINGLE INLET
STANDARDS COMMITTEE APPROVED FOR DISTRIBUTION 12/17 DATE	DRAWING NO. C-04.10 Sheet 1 of 2

PRIOR DISTRIBUTION DATE 05/12

Note to Designer:
The information presented in this Standard Drawing has been prepared in accordance with recognized engineering principles and is for general use. It should not be used for specific application without competent professional examination and verification of its suitability and applicability by a licensed professional engineer. Contents within the inner border line shall not be altered.