UNIFORM STANDARD DETAILS for PUBLIC WORKS CONSTRUCTION

SPONSORED and DISTRIBUTED by the

MARICOPA ASSOCIATION of GOVERNMENTS

2017 REVISION TO THE 2015 EDITION

ARIZONA

100 SERIES: GENERAL INFORMATION

Detail	Revised	Title
101	2011	GENERAL INFORMATION
110-1	2011	PLAN SYMBOLS (SYMBOLS)
110-2	2011	PLAN SYMBOLS (LINE TYPES)
112	1998	DIMENSIONING FOR ROAD IMPROVEMENT PLANS
120	2015	SURVEY MARKER
122	2011	PAVEMENT MARKER FOR FIRE HYDRANTS
130	2003	BARRICADES
131	1998	STREET SIGN BASE
140	2009	BOLLARD
141	2009	HAZARD MARKER
145	2016	SAFETY RAIL
150	1998	PRECAST SAFETY CURB
160	2013	6' CHAIN LINK FENCE AND GATE

200 SERIES: STREET INFORMATION

Detail	Revised	Title
200-1	2016	TRENCH BACKFILL AND SURFACE REPLACEMENT
200-2	2016	TRENCH BACKFILL AND SURFACE REPLACEMENT
201	2014	ASPHALT PAVEMENT EDGE DETAILS
202	1998	ALLEY DETAILS (PAVED AND UNPAVED)
203	1998	SCUPPERS
204	1998	EQUIPMENT CROSSING
205	2006	PAVED TURNOUTS
206-1	2007	CONCRETE SCUPPER
206-2	2007	CONCRETE SCUPPER
206-3	2007	CONCRETE SCUPPER (ISOMETRIC VIEW)
210	2012	RESIDENTIAL SPEED HUMP
211	1998	STANDARD TRENCH PLATING DETAIL
212	2015	UTILITY POTHOLE REPAIR
220-1	2007	CURB AND GUTTER TYPES A, B, C AND D
220-2	2007	CURB AND GUTTER TYPES E AND F
221	2014	CURB AND GUTTER TRANSITION TYPE A TO TYPE C, INTEGRAL ROLL CURB, GUTTER AND SIDEWALK
222	2008	SINGLE CURB - TYPES A, B AND TERMINATION
223	1998	MEDIAN NOSE TRANSITION
224	1998	JOINT FOR DRAINAGE INLETS AND MANHOLE COVERS
225	2016	CONCRETE PAVERS
230	2014	SIDEWALKS
234	2012	CURB MODIFICATION AT DETECTABLE WARNING
235-1	2012	CURB RAMPS (TYPE A)
235-2	2012	CURB RAMPS (TYPE B)
235-3	2012	CURB RAMPS (TYPE C)
235-4	2011	CURB RAMPS (TYPE D)
235-5	2011	CURB RAMPS (TYPE E)
236-1	2017*	DUAL CURB RAMP (RADIAL, 25'-35' R) ATTACHED SIDEWALK
236-2	2017*	DUAL CURB RAMP (RADIAL, 25'-35' R) DETTACHED SIDEWALK
236-3	2017*	DUAL CURB RAMP (RADIAL, 20' R) ATTACHED SIDEWALK

200 SERIES: STREET INFORMATION (CONTINUED)

Detail	Revised	Title
237-1	2017*	DUAL CURB RAMP (DIRECTIONAL, 25'-35' R) ATTACHED SIDEWALK
237-2	2017*	DUAL CURB RAMP (DIRECTIONAL, 25'-35' R) DETTACHED SIDEWALK
237-3	2017*	DUAL CURB RAMP (DIRECTIONAL, 20' R) ATTACHED SIDEWALK
240	2010	VALLEY GUTTER
250-1	2014	DRIVEWAY ENTRANCES WITH DETACHED SIDEWALK
250-2	2013	DRIVEWAY ENTRANCES WITH SIDEWALK ATTACHED TO CURB
251	2017*	RETURN TYPE DRIVEWAYS
252	2005	BUS BAYS
260	2013	ALLEY ENTRANCE (WITH VERTICAL CURB AND GUTTER)
262	2012	WING TYPE ALLEY ENTRANCE (W/ COMBINED CURB & GUTTER)
263	2002	WING TYPE ALLEY ENTRANCE (W/ ROLL TYPE CURB & GUTTER)
270	2017*	ROUND FRAME AND COVER (AND GRADE ADJUSTMENTS)
271	2017*	SQUARE FRAME AND COVER (AND GRADE ADJUSTMENTS)

300 SERIES: WATER INFORMATION

Detail	Revised	Title
301	1998	BLOCKING FOR WATER GATE AND BUTTERFLY VALVES
302-1	1998	JOINT RESTRAINT WITH TIE RODS (DRAWING)
302-2	1998	JOINT RESTRAINT WITH TIE RODS (NOTES)
303-1	1998	JOINT RESTRAINT FOR DUCTILE IRON AND POLYETHYLENE WRAPPED DUCTILE IRON WATER PIPES (DRAWING)
303-2	1998	JOINT RESTRAINT FOR DUCTILE IRON AND POLYETHYLENE WRAPPED DUCTILE IRON WATER PIPES (TABLES)
310	2017*	STEEL WATER METER BOX COVER
315	2017*	POLYMER CONCRETE WATER METER BOX COVER
319	2017*	TRAFFIC RATED BOX AND COVER
320	2017*	NON TRAFFIC RATED WATER METER BOXES
321	1998	STANDARD WATER METER VAULT
340	2002	INSTALLING TAPPING SLEEVES AND VALVES
342	1998	CONCRETE PRESSURE PIPE TAPPING SLEEVE
345-1	1998	3", 4", 6" WATER METER
345-2	1998	4", 6" WATER METER WITH ON-SITE HYDRANTS
346	1998	FIRE LINE DETECTOR CHECK VAULT
360-1	2013	DRY BARREL FIRE HYDRANT INSTALLATION
360-2	2013	WET BARREL FIRE HYDRANT INSTALLATION
360-3	2013	FIRE HYDRANT INSTALLATION DETAILS
362	1999	LOCATIONS FOR NEW FIRE HYDRANTS
370	1998	VERTICAL REALIGNMENT OF WATER MAINS
380	1998	THRUST BLOCKS FOR WATER LINES
381	1998	ANCHOR BLOCKS FOR VERTICAL BENDS
389	2001	CURB STOP WITH VALVE BOX AND COVER
390	1998	CURB STOP WITH FLUSHING PIPE
391-1	2017*	VALVE BOX INSTALLATION AND GRADE ADJUSTMENT
391-2	2017*	VALVE BOX INSTALLATION AND GRADE ADJUSTMENT
392	2015	DEBRIS CAP INSTALLATION
393	2017*	WATER VALVE EXTENSION

* NEWLY REVISED.

400 SERIES: SEWER INFORMATION

Detail	Revised	Title
403-1	1998	PIPE SUPPORT ACROSS TRENCHES
403-2	1998	PIPE SUPPORT ACROSS TRENCHES
403-3	1998	ALTERNATIVE TO PIPE SUPPORT
404-1	2006	WATER AND SANITARY SEWER SEPARATION/PROTECTION
404-2	2006	WATER AND SANITARY SEWER SEPARATION/PROTECTION
404-3	2006	WATER AND SANITARY SEWER SEPARATION/PROTECTION
405	1998	BROKEN SEWER LINE REPLACEMENT
420-1	2015	CONCRETE SANITARY SEWER MANHOLE
420-2	2015	PRE-CAST CONCRETE MANHOLE BASE
420-3	2015	CONCRETE MANHOLE BASE
421	2015	OFFSET MANHOLE 8” TO 30” PIPE
422	2015	MANHOLE FRAME AND COVER ADJUSTMENT
423-1	2012	24” CAST IRON MANHOLE FRAME AND COVER
423-2	2012	30” CAST IRON MANHOLE FRAME AND COVER
424-1	2012	24” CAST IRON WATERTIGHT MANHOLE FRAME AND COVER
424-2	2012	30” CAST IRON WATERTIGHT MANHOLE FRAME AND COVER
425	1998	24” ALUMINUM MANHOLE FRAME AND COVER
426	2007	DROP SEWER CONNECTIONS
427	1998	STUB OUT AND PLUGS
429	2015	INDUSTRIAL WASTE CONTROL VAULT WITH MANHOLE
440-1	2007	TYPE ‘A’ SEWER BUILDING CONNECTION - ELECTRONIC BALL MARKERS (STANDARD)
440-2	2007	TYPE ‘B’ SEWER BUILDING CONNECTION - TWO-WAY CLEANOUT AND METER BOX AT R/W
440-3	2007	TYPE ‘C’ SEWER BUILDING CONNECTION - ONE-WAY CLEANOUT AND METER BOX
440-4	2006	SEWER SERVICE CURB CROSSING STAMP DETAIL
441	2001	SEWER CLEANOUT

500 SERIES: IRRIGATION AND STORM DRAIN INFORMATION

Detail	Revised	Title
501-1	2012	HEADWALL
501-2	2012	HEADWALL
501-3	1998	HEADWALL 42” TO 84” PIPE
501-4	1998	HEADWALL IRRIGATION 18” TO 60” PIPE
501-5	2014	HEADWALL DROP INLET
502-1	1998	TRASH RACK
502-2	2004	TRASH RACK
503	1998	IRRIGATION STANDPIPE
504	1998	CONCRETE BLOCK JUNCTION BOX
505	1998	CONCRETE PIPE COLLAR
506	1998	IRRIGATION VALVE INSTALLATION
507	2017*	ENCASED CONCRETE PIPE (FOR SHALLOW INSTALLATION)
510	1998	CORRUGATED METAL PIPE AND INSTALLATION

500 SERIES: IRRIGATION AND STORM DRAIN INFORMATION (CONTINUED)

Detail	Revised	Title
520	1998	STORM DRAIN MANHOLE BASE (48” AND SMALLER)
521	1998	STORM DRAIN MANHOLE BASE (51” OR LARGER)
522	2015	STORM DRAIN MANHOLE SHAFT
523-1	1998	PRESSURE MANHOLE
523-2	1998	PRESSURE MANHOLE
524	1998	STORM DRAIN LATERAL PIPE CONNECTIONS
530	1998	3’-6” CURB OPENING CATCH BASIN - TYPE ‘A’
531	1998	5’-6” CURB OPENING CATCH BASIN - TYPE ‘B’
532	1998	8’-0” CURB OPENING CATCH BASIN - TYPE ‘C’
533-1	1998	CATCH BASIN TYPE ‘D’
533-2	1999	APRON FOR TYPE ‘D’ CATCH BASIN
533-3	2007	FRAME AND GRATE FOR TYPE ‘D’ CATCH BASIN
533-4	2007	7’-0” CURB OPENING CATCH BASIN TYPE ‘D’ - GRATE DETAILS
534-1	1998	CATCH BASIN TYPE ‘E’
534-2	1998	CATCH BASIN TYPE ‘E’ (DETAILS)
534-3	1998	CATCH BASIN TYPE ‘E’ (DETAILS)
534-4	1998	CATCH BASIN TYPE ‘E’ (DETAILS)
534-5	1998	ALTERNATE GRATE STYLES, SUMP LOCATION
535	2009	CATCH BASIN TYPE ‘F’ (FOR USE WITHOUT CURB)
536-1	1999	COMMON DETAILS AND SECTIONS FOR CURB OPENING CATCH BASINS
536-2	1998	ALTERNATIVE COVER FOR CURB OPENING CATCH BASINS
537	2002	CATCH BASIN TYPE ‘G’
538	1998	CATCH BASIN TYPE ‘H’
539	1998	GRATES FOR CATCH BASINS, TYPE G AND H
540-1	1998	CATCH BASIN GRATES
540-2	1998	CATCH BASIN GRATES
541	2005	CATCH BASIN SUBGRADE DRAIN
545	1998	END SECTION - REINFORCED CONCRETE PIPE
550	1998	SPILLWAY INLET AND OUTLET
552	2015	FORD CROSSING WITH CUT-OFF WALLS
555	2010	EROSION PROTECTION/GABIONS

* NEWLY REVISED.

1. THESE DETAILS HAVE BEEN PREPARED IN AN EFFORT TO STANDARDIZE THE CONSTRUCTION DETAILS USED BY VARIOUS CONTRACTING AGENCIES IN MARICOPA COUNTY. THEY ARE TO BE USED IN CONJUCTION WITH THE CURRENT EDITION OF THE "UNIFORM STANDARD SPECIFICATIONS FOR PUBLIC WORKS CONSTRUCTION" SPONSORED AND DISTRIBUTED BY THE MARICOPA ASSOCIATION OF GOVERNMENTS.

2. MANY NOTES WITHIN THESE DETAILS REFER TO VARIOUS SECTIONS OF THE "UNIFORM STANDARD SPECIFICATIONS FOR PUBLIC WORKS CONSTRUCTION." WHERE THIS REFERENCE IS MADE, ONLY THE ABBREVIATION "SECT." IS USED. AN EXAMPLE OF THIS REFERENCE WOULD BE: "CLASS 'A' CONCRETE PER SECT. 725."

3. MANY NOTES WITHIN THESE DETAILS REFER TO OTHER DETAILS WITHIN THIS BOOK. WHERE THIS REFERENCE IS MADE, THE ABBREVIATION "DETAIL" IS USED. AN EXAMPLE OF THIS WOULD BE: "SEE DETAIL 391 FOR VALVE BOX INSTALLATION."

4. MANY DETAILS COVER MORE THAN ONE SHEET. THESE SHEETS HAVE BEEN GIVEN THE SAME NUMBER WITH A SUFFIX NUMBER, EXAMPLE: 391-1 AND 391-2.

5. AN EFFORT HAS BEEN MADE TO INCLUDE THE MOST COMMONLY USED CONSTRUCTION DETAILS IN THIS BOOK. ITEMS WHICH REQUIRE DESIGN CONSIDERATION BY THE DESIGNING ENGINEER HAVE NOT BEEN INCLUDED.

6. SOME OF THE DETAILS PRINTED HEREIN MAY BE USED BY SOME OF THE AGENCIES BUT NOT OTHERS. THE DESIGNING ENGINEER SHOULD THEREFORE CONTACT THE AGENCY WITHIN WHOSE JURISDICTION HE IS WORKING FOR DIRECTION AS TO WHICH DETAIL OR PORTIONS OF DETAILS SHOULD BE USED.

7. DETAIL DRAWINGS ARE NOT TO SCALE.

SEWER CLEANOUT

FIRE HYDRANT

WATER METER

UTILITY MANHOLE

IRRIGATION STANDPIPE

UTILITY VALVE

SEWER SERVICE CONNECTION

MONITORING WELL

REDUCER

WOOD UTILITY POLE

STEEL UTILITY POLE

CONCRETE UTILITY POLE

STREET LIGHT ON MAST ARM

POLE MOUNTED LIGHT

ELECTRIC, GAS METER

TRANSFORMER

DOWN GUY & ANCHOR

SURVEY MONUMENT

SURVEY MONUMENT IN HANDHOLE

MAIL BOX

SIGNAL POLE

SINGLE POST SIGN

DOUBLE POST SIGN

STREET NAME SIGN

VIDEO DETECTION CAMERA

PULL BOX

CELLULAR TOWER

BITUMINOUS (SECTION)

CONCRETE (SECTION)

AGGREGATE BASE COURSE (SECTION)

RIPRAP (PLAN & SECTION)

OBLITERATE PAVEMENT

TAPERED MILL

UNIFORM MILL

EARTH (SECTION)

NOTES:

1. PLAN SYMBOLS FOR EXISTING FEATURES ARE TO BE DASHED, GRAY SCALED, OR DRAWN USING THIN LINEWORK.
2. ADD LABELS TO PLAN SYMBOLS AS NEEDED FOR CLARITY.

SECTION LINE

R/W

EASEMENT

PROPERTY LINE (OPTION 1)

PROPERTY LINE (OPTION 2) — PL

JURISDICTIONAL BOUNDARY (OPTION 1)

JURISDICTIONAL BOUNDARY (OPTION 2)

ROADWAY CENTERLINE

UNDERGROUND ELECTRIC BURIED CABLE — E

UNDERGROUND ELECTRIC CONDUIT — E (CONDUIT)

UNDERGROUND ELECTRIC DUCT BANK — E (DUCT BANK)

OVERHEAD ELECTRIC — OHE

UNDERGROUND TELEPHONE LINE — T

OVERHEAD TELEPHONE LINE — OHT

FIBER OPTIC — FO

CABLE TELEVISION — TV

OVERHEAD CABLE TELEVISION — OHTV

TELEPHONE DUCT BANK — T (DUCT BANK)

CHAIN LINK FENCE

BARBED WIRE FENCE

BLOCK WALL

WOOD FENCE

GAS LINE (12" & SMALLER) — 4" G (MATERIAL)

GAS LINE * (GREATER THAN 12") — 15" G (MATERIAL)

SEWER LINE (12" & SMALLER) — 8" S (MATERIAL)

SEWER LINE * (GREATER THAN 12") — 18" S (MATERIAL)

NEW STORM DRAIN PIPE *

STORM DRAIN * (GREATER THAN 12") — 18" SD (MATERIAL)

IRRIGATION LINE (12" & SMALLER) — 4" IRR (MATERIAL)

IRRIGATION LINE * (GREATER THAN 12") — 15" IRR (MATERIAL)

NEW IRRIGATION LINE *

WATER LINE (12" & SMALLER) — 4" W (MATERIAL)

WATER LINE * (GREATER THAN 12") — 36" W (MATERIAL)

* SCALE TO ACTUAL WIDTH

DETAIL NO.		STANDARD DETAIL		REVISED	DETAIL NO.
110-2	MARICOPA ASSOCIATION of GOVERNMENTS	ENGLISH	PLAN SYMBOLS	01-01-2011	110-2

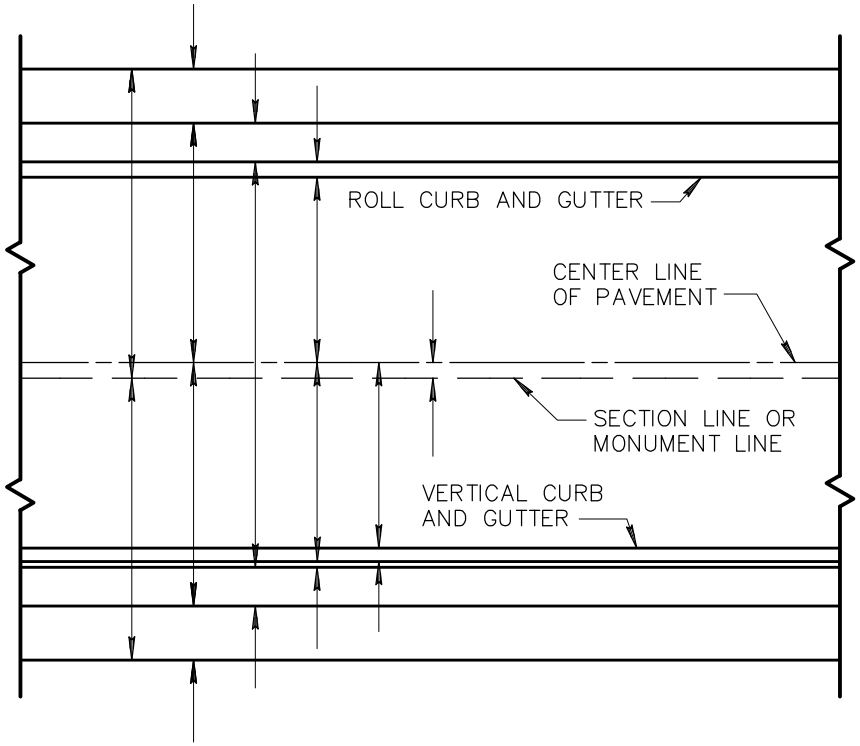

DIMENSION SHOULD BE GIVEN ONCE ON EACH SHEET AND SHOULD BE PLACED NEAR THE CENTER OF THE SHEET. IF ANY OF THE GIVEN CONDITIONS CHANGE, THEY SHOULD BE REDIMENSIONED AT THE POINT OF CHANGE.

GIVEN DIMENSIONS IN ORDER STARTING WITH THE LONGEST AND ENDING WITH THE SHORTEST, AS SHOWN IN THE SKETCH.

GIVE COMPLETE DIMENSIONS.

IF THE CENTERLINE OF PAVEMENT DOES NOT FALL ON THE SECTION LINE OR MONUMENT LINE OF THE STREET, DIMENSION AS ABOVE AND SHOW THE DIFFERENCE BETWEEN THE SECTION OR MONUMENT LINE AND THE CENTERLINE.

DETAIL NO.				REVISED	DETAIL NO.
112	MARICOPA ASSOCIATION of GOVERNMENTS	STANDARD DETAIL ENGLISH	DIMENSIONING FOR ROAD IMPROVEMENT PLANS	01-01-1998	112

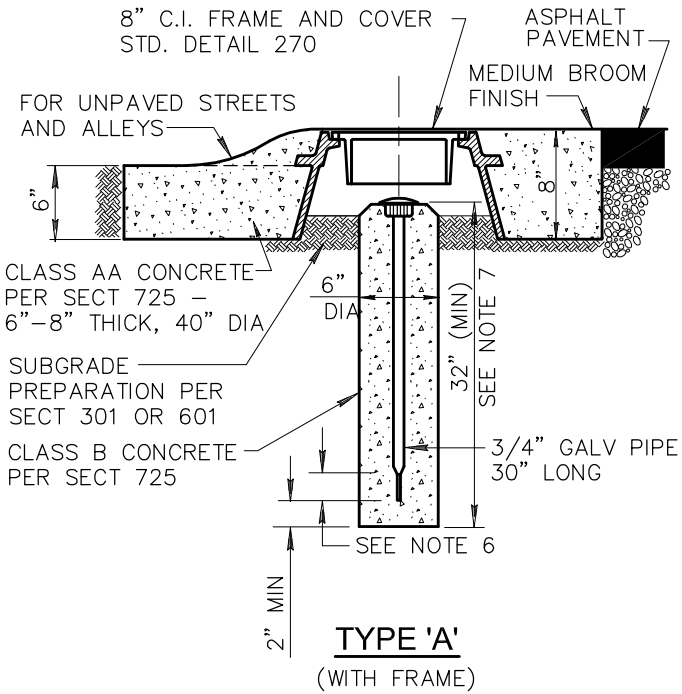

TYPE 'A'

(WITH FRAME)

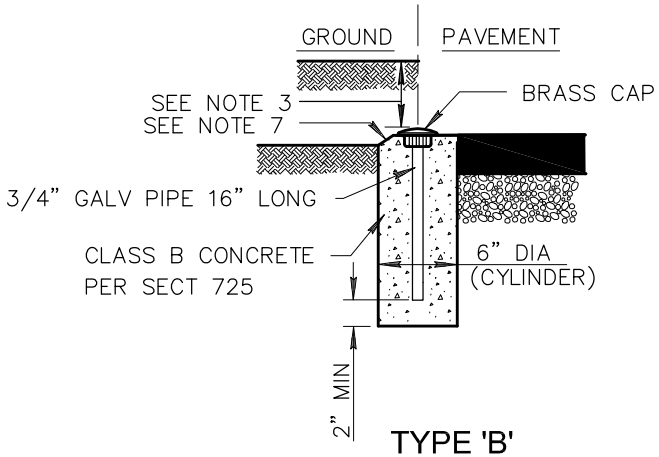

TYPE 'B'

(WITHOUT FRAME)

NOTES:

1. TYPE 'A' TO BE USED AT INTERSECTIONS OF MAJOR STREETS & COLLECTOR STREETS, SECTION CORNERS, SECTION 1/4 CORNERS, CENTER OF SECTIONS, AND AT OTHER POINTS AS SHOWN ON PLANS.
2. TYPE 'B' TO BE USED (EXCEPT WHERE TYPE 'A' IS SPECIFIED) AT INTERSECTION OF STREET CENTERLINES, PC'S, PT'S AND PI'S OF CURVES, SECTION 1/16 CORNERS, SUBDIVISION CORNERS, CHANGE IN ALIGNMENT OF SUBDIVISION BOUNDARIES, AND AT OTHER POINTS AS SHOWN ON PLANS.
3. FOR UNPAVED STREETS AND ALLEYS SET TOP OF MARKER SIX INCHES BELOW FINISHED GRADE.
4. CAP TO BE CONSTRUCTED OF RED BRASS OR BRONZE.
5. LETTERS TO BE APPROX. 1/32" WIDE & 1/32" DEEP.
6. FLATTENING THE BOTTOM 2" OF THE GALVANIZED PIPE IS OPTIONAL.
7. TOP OF CONCRETE POST IS CHAMFERED 3/4" EXCEPT WHEN SET FLUSH WITH PAVEMENT.
8. THE CAP SHALL SHOW THE POINT SURVEYED BY A PUNCH MARK OR SCRIBED CROSS AND THE CAP SHALL BE STAMPED WITH THE YEAR AND THE REGISTERED LAND SURVEYOR'S (RLS) REGISTRATION NUMBER.
9. WHEN APPLICABLE, THE CAP SHALL BE STAMPED WITH THE APPROPRIATE PUBLIC LAND MARKING PER CURRENT MANUAL OF INSTRUCTIONS FOR THE SURVEY OF PUBLIC LANDS OF THE UNITED STATES, PREPARED BY THE BUREAU OF LAND MANAGEMENT.
10. SUBMIT TO THE ENGINEER A COPY OF THE RECORDED CORNER RECORD OR RESULTS OF SURVEY TO DOCUMENT COMPLIANCE WITH THE ARIZONA BOARD OF TECHNICAL REGISTRATION REQUIREMENTS.

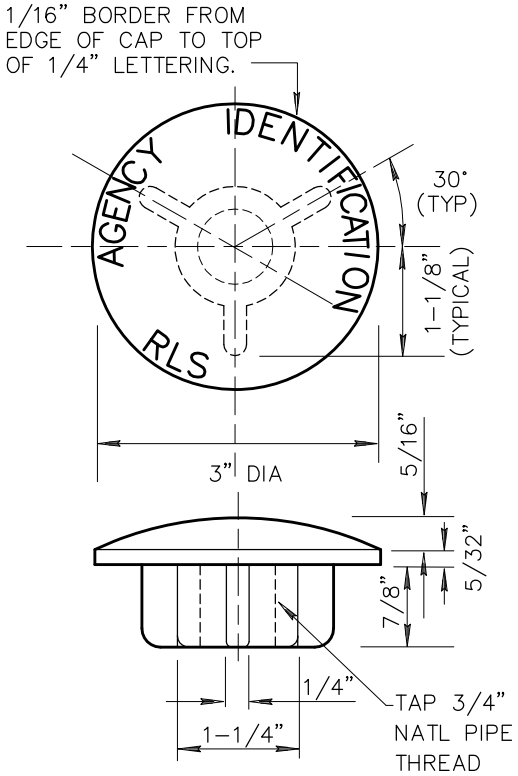

CAP DETAIL

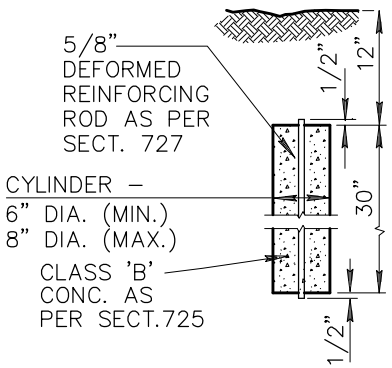

TYPE 'C'

DETAIL NO.				REVISED	DETAIL NO.
120	MARICOPA ASSOCIATION of GOVERNMENTS	STANDARD DETAIL ENGLISH	SURVEY MARKER	01–01–2015	120

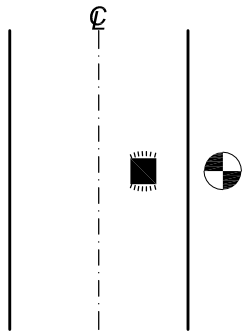

LOCAL STREET

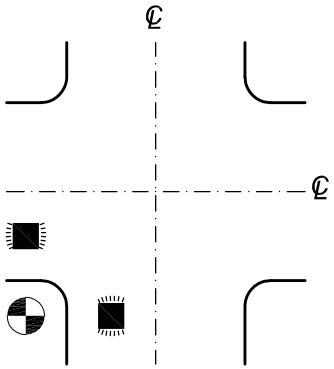

LOCAL CROSS
STREET INTERSECTION

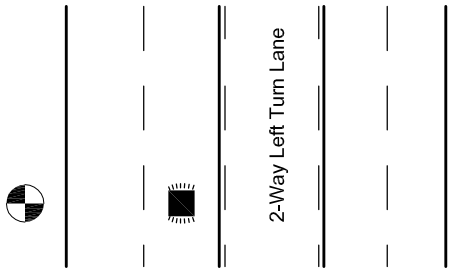

MULTI-LANE STREET
W/ TWO WAY LEFT TURN LANE

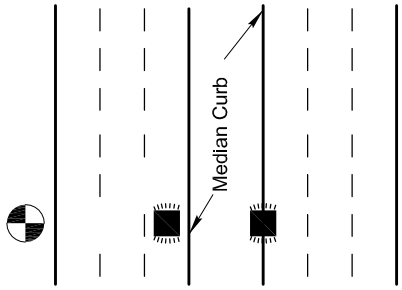

MULTI-LANE STREET
W/ RAISED MEDIAN

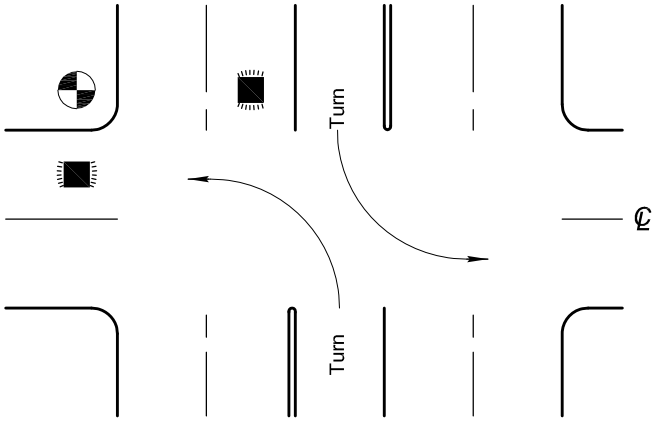

FOUR LANE STREET
WITH TURN LANE AT INTERSECTION

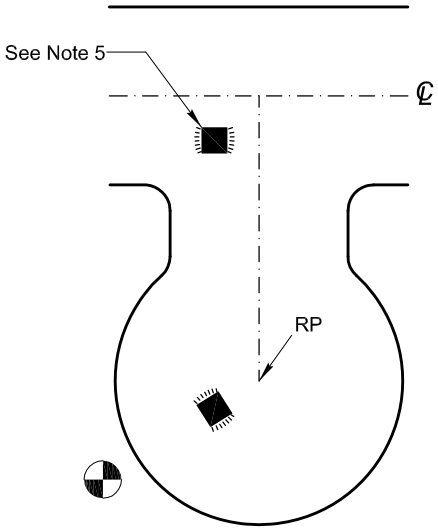

CUL-DE-SAC

NOTES:

1. LOCATE PAVEMENT MARKER IN CENTER OF TRAVEL LANE AND ALIGN WITH HYDRANT.
2. FOR MULIPLE LANE ROADS LOCATE PAVEMENT MARKER IN LEFT MOST THROUGH TRAFFIC LANE.
3. ADJUST MARKER LOCATION TO BE LOCATED OUTSIDE OF ANY DELINEATED CROSSWALK AREA.
4. FOR HYDRANT LOCATED ON FAR SIDE OF RAISED MEDIAN, LOCATE PAVEMENT MARKER ON TOP OF MEDIAN CURB ALIGNED WITH HYDRANT.
5. OMIT FOR CUL-DE-SAC GREATER THAN 250' IN LENGTH.
6. FIRE HYDRANT PAVEMENT MARKERS SHALL BE 2-WAY RETROREFLECTIVE BLUE: ADOT TYPE BB, 911A-BLUE BY FIRE LITE AMERACE CORPORATION, OR APPROVED EQUAL.

DETAIL NO.				REVISED	DETAIL NO.
122	MARICOPA ASSOCIATION of GOVERNMENTS	STANDARD DETAIL ENGLISH	PAVEMENT MARKER FOR FIRE HYDRANTS	01–01–2011	122

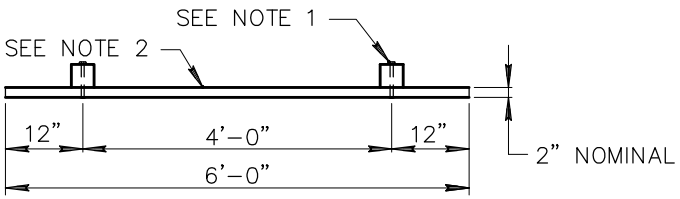

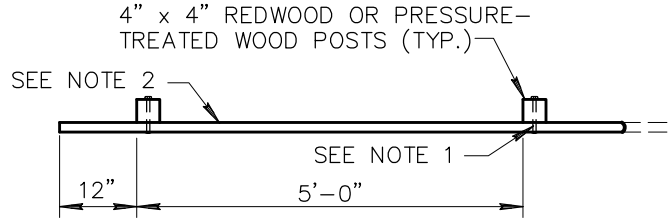

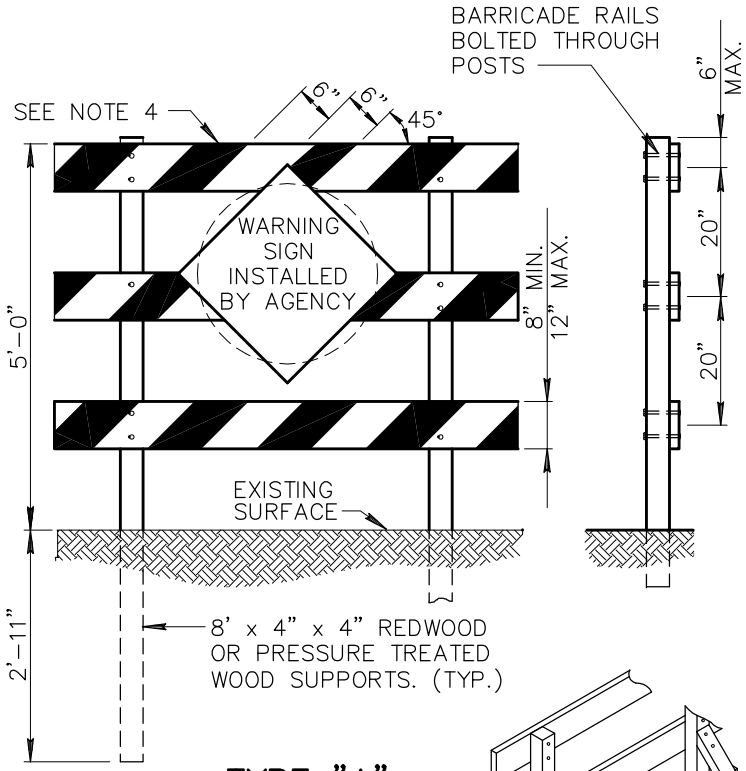

TYPE "A"

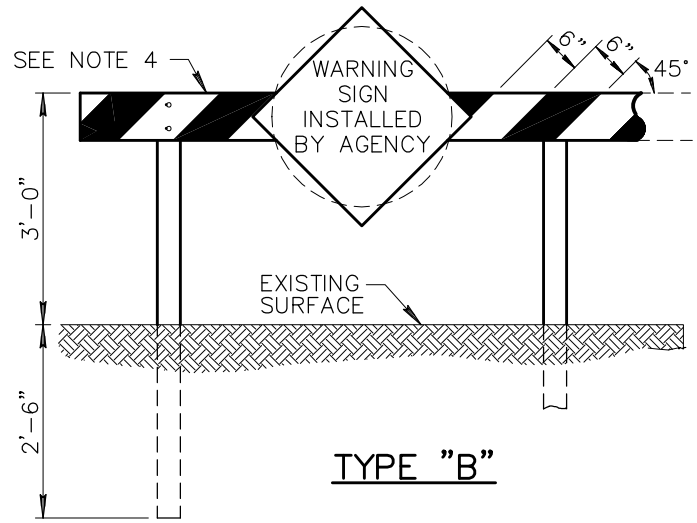

TYPE "B"

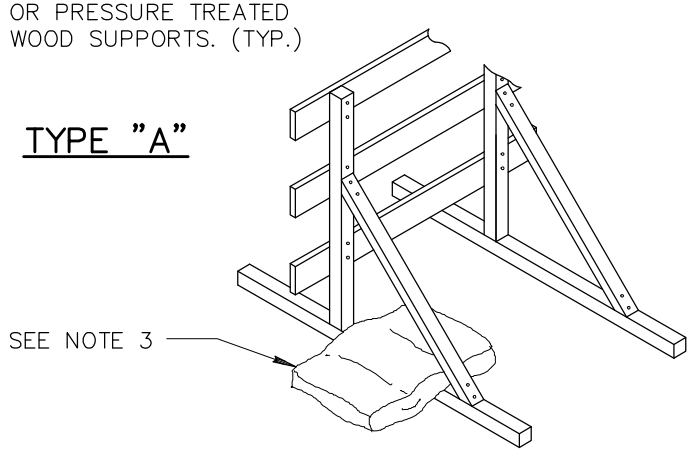

NOTES:

1. FASTEN WITH 1/2" x 5" LAG SCREWS WITH 2 FLAT WASHERS OR (2) 5/8" BOLTS, WITH 4 FLAT WASHERS.
2. 2" x 8" DOUGLAS FIR PLANK (LENGTH TO BE DETERMINED ON PLANS.)
3. WHEN BARRICADE (TYPE "A") IS CONSTRUCTED ON BASES INSTEAD OF POSTS SET INTO THE GROUND, IT MAY BE DESIRABLE TO BALLAST THE BASES WITH SAND BAGS OR BY STAKING TO PROVIDE RESISTANCE TO OVERTURNING DURING PERIODS OF HIGH WINDS.
4. TWO COATS OF WHITE PAINT PER SECTION 790 SHALL BE APPLIED TO ALL EXPOSED SURFACES OF THE BARRICADE. AN ADDITIONAL TWO COATS OF ORANGE PAINT PER SECTION 790 SHALL BE APPLIED TO CREATE THE ALTERNATE ORANGE AND WHITE STRIPES FOR TEMPORARY BARRICADES AND TWO COATS OF RED PAINT PER SECTION 790 SHALL BE APPLIED TO CREATE ALTERNATE RED AND WHITE STRIPES FOR PERMANENT BARRICADES. HIGHWAY SAFETY SPHERES (BEADS) PER ADOT 708-2.02 SHALL BE APPLIED BY HAND TO ALL CROSS MEMBERS, FRONT AND BACK AND ON BOTH COLORS, IMMEDIATELY AFTER PAINTING. THE STRIPES SHALL SLOPE DOWNWARD IN THE DIRECTION TRAFFIC IS TO PASS.

DETAIL NO.				REVISED	DETAIL NO.
130	MARICOPA ASSOCIATION of GOVERNMENTS	STANDARD DETAIL ENGLISH	BARRICADES	01-01-2003	130

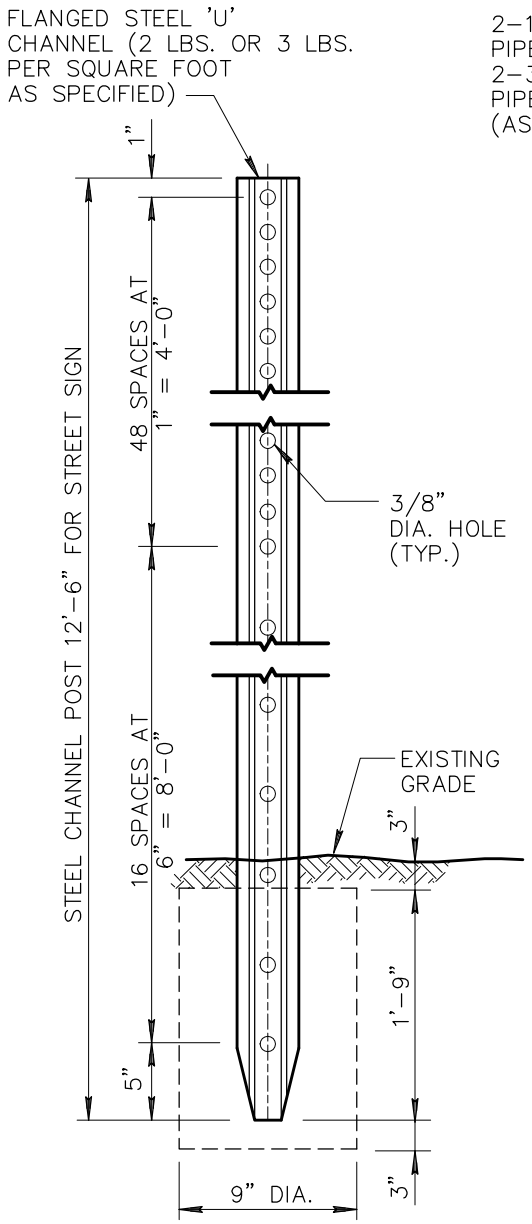

TYPE 'A'

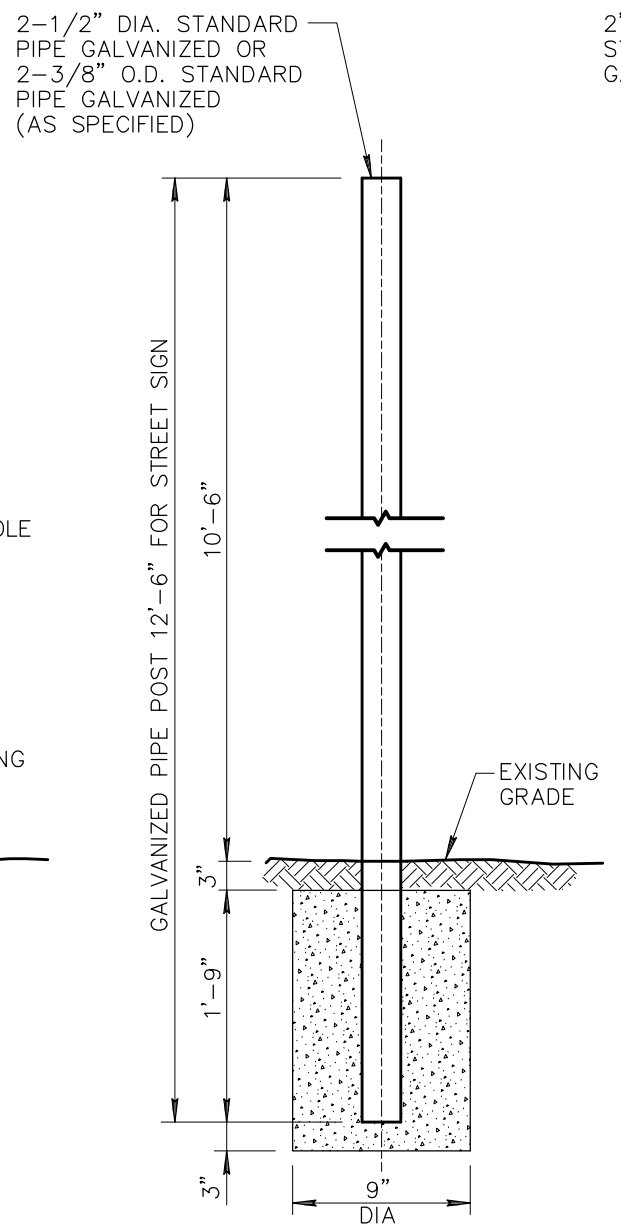

TYPE 'B'

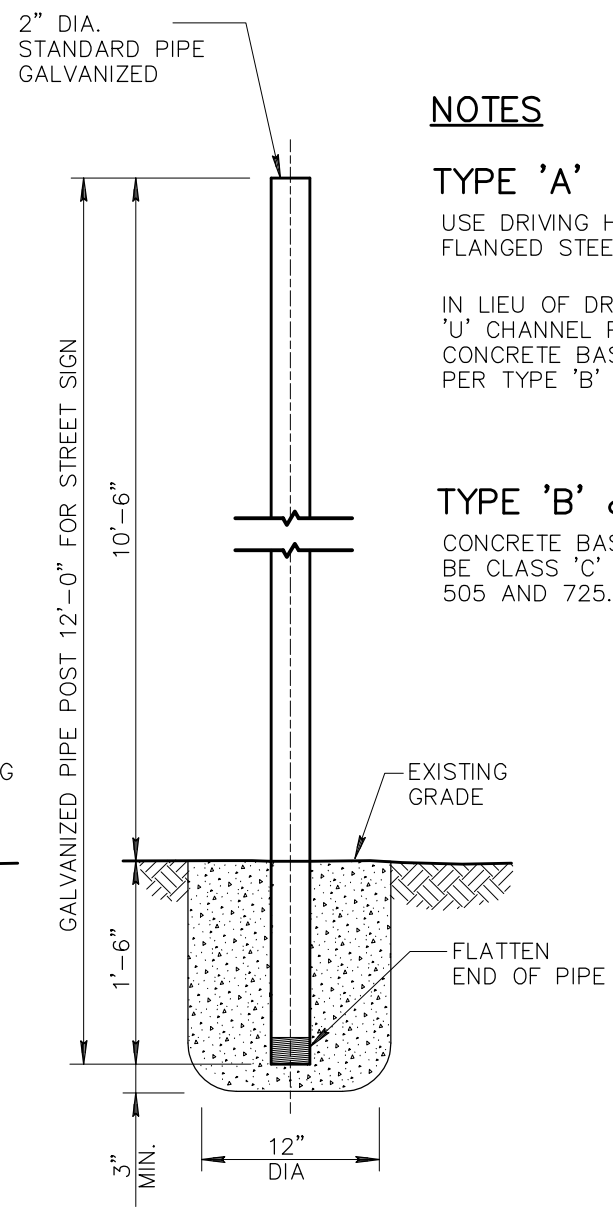

TYPE 'C'

NOTES

TYPE 'A'

USE DRIVING HEAD FOR DRIVING ALL FLANGED STEEL 'U' CHANNEL POSTS.

IN LIEU OF DRIVING FLANGED STEEL 'U' CHANNEL POSTS MAY BE SET IN CONCRETE BASE FOUNDATION AS PER TYPE 'B' BASE.

TYPE 'B' & TYPE 'C'

CONCRETE BASE FOUNDATIONS SHALL BE CLASS 'C' CONCRETE AS PER SECT. 505 AND 725.

DETAIL NO.				REVISED	DETAIL NO.
131	MARICOPA ASSOCIATION of GOVERNMENTS	STANDARD DETAIL ENGLISH	STREET SIGN BASE	01-01-1998	131

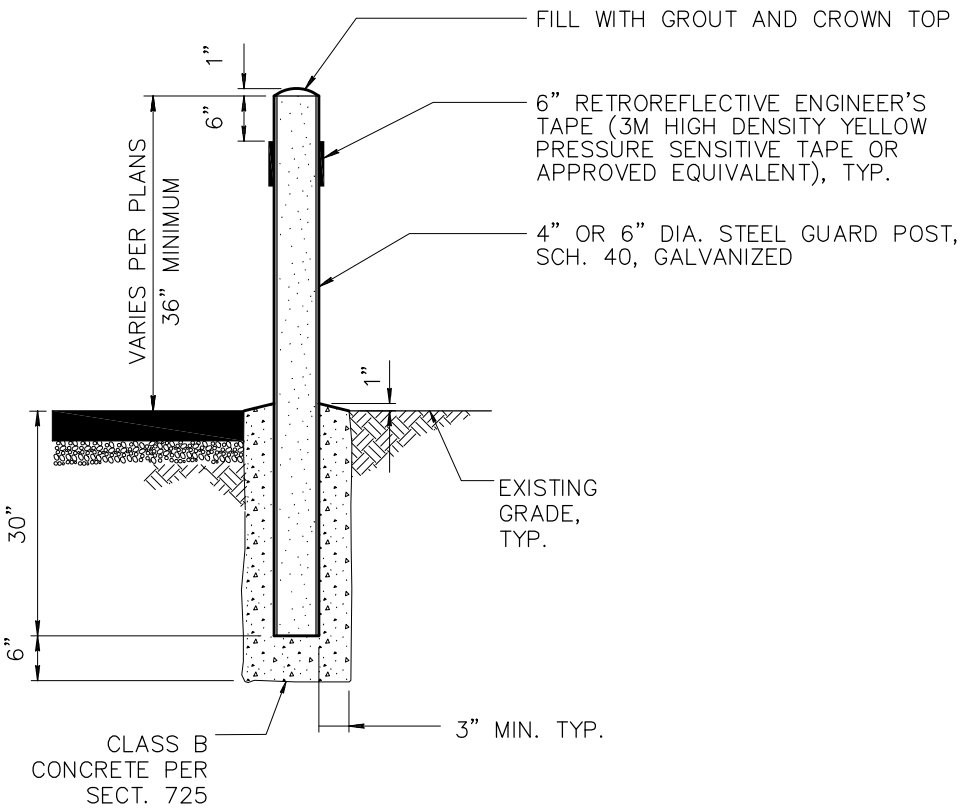

TYPE 1 PERMANENT

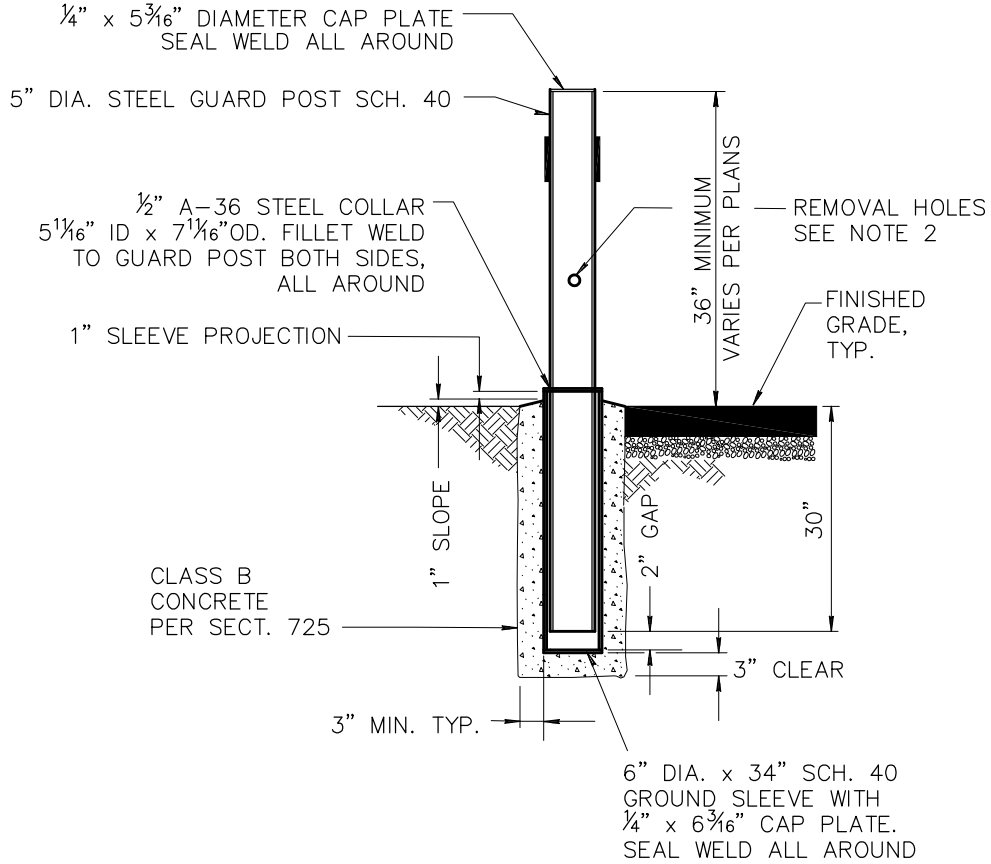

TYPE 2 REMOVABLE

NOTES

1. BOLLARDS SHALL HAVE A HEIGHT OF 3 FEET OR BE EQUAL TO THE HEIGHT OF THE BACK SCREEN WALL OF BIN ENCLOSURES. POSTS SHALL BE PLACED A MINIMUM OF 4" FROM THE WALL.
2. REMOVABLE POSTS SHALL HAVE 1" DIA. HOLES DRILLED THROUGH AT A DISTANCE ⅓ THE OVERALL POST LENGTH FROM TOP.
3. REMOVABLE POST – GRIND SMOOTH ALL SHARP EDGES PRIOR TO GALVANIZATION. GALVANIZE PER ASTM A54 AFTER FABRICATION.

DETAIL NO.				REVISED	DETAIL NO.
140	MARICOPA ASSOCIATION of GOVERNMENTS	STANDARD DETAIL ENGLISH	BOLLARD	01-01-2009	140

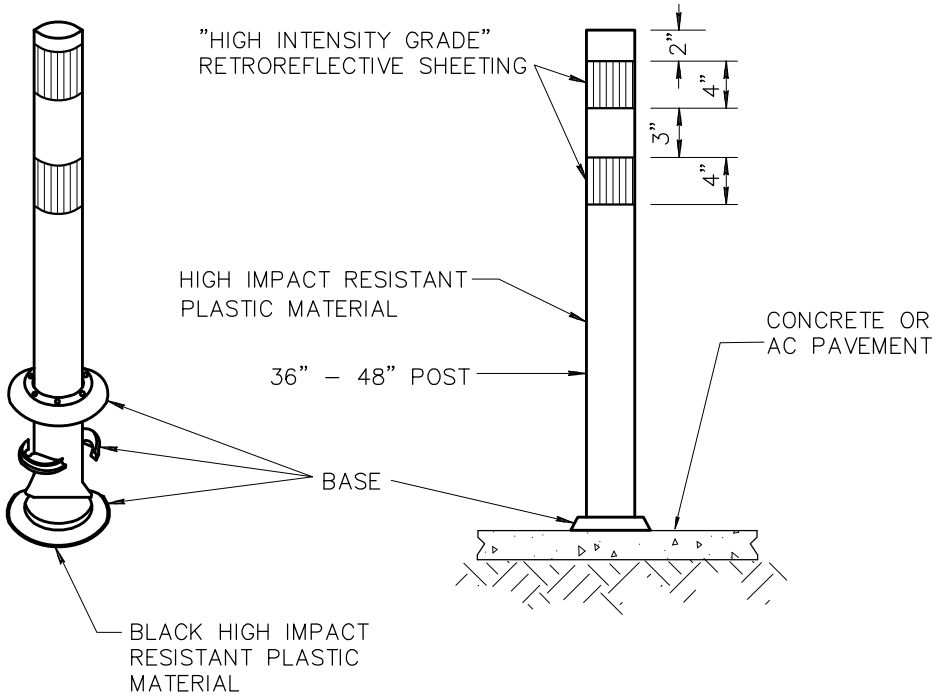

TYPE 1 SURFACE MOUNT

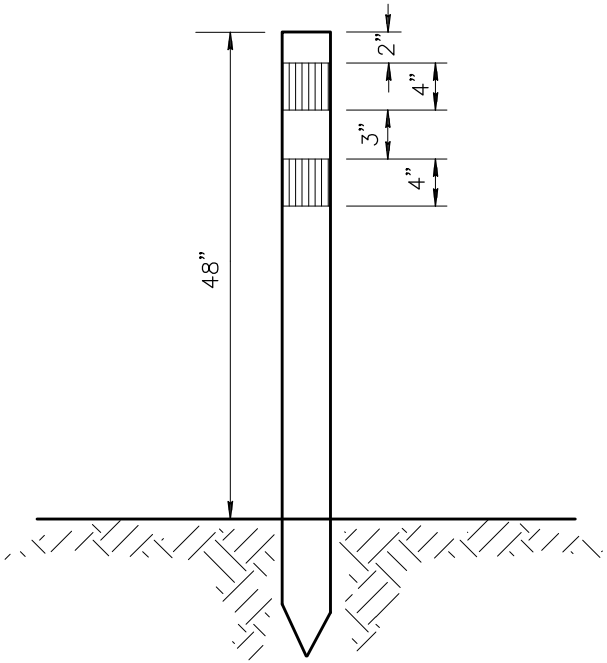

TYPE 2 GROUND MOUNT

NOTES

1. CONTRACTOR SHALL CLEAN ROADWAY SURFACE PRIOR TO PLACEMENT OF FLEXIBLE TUBULAR MARKER.
2. FLEXIBLE TUBULAR MARKERS SHALL BE CEMENTED TO THE PAVEMENT SURFACE WITH AN EPOXY ADHESIVE IN ACCORDANCE WITH THE TUBULAR MARKER MANUFACTURER'S SPECIFICATIONS.
3. YELLOW TUBULAR MARKERS SHALL HAVE A YELLOW POST AND YELLOW "HIGH INTENSITY GRADE" RETROREFLECTIVE SHEETING. ORANGE TUBULAR MARKERS SHALL HAVE AN ORANGE POST AND WHITE HIGH INTENSITY RETROREFLECTIVE SHEETING.
4. POST SHALL BE FLEXIBLE, HIGH IMPACT RESISTANT PLASTIC MATERIAL.

DETAIL NO.			REVISED	DETAIL NO.
141	MARICOPA ASSOCIATION of GOVERNMENTS — STANDARD DETAIL ENGLISH	HAZARD MARKER	01–01–2009	141

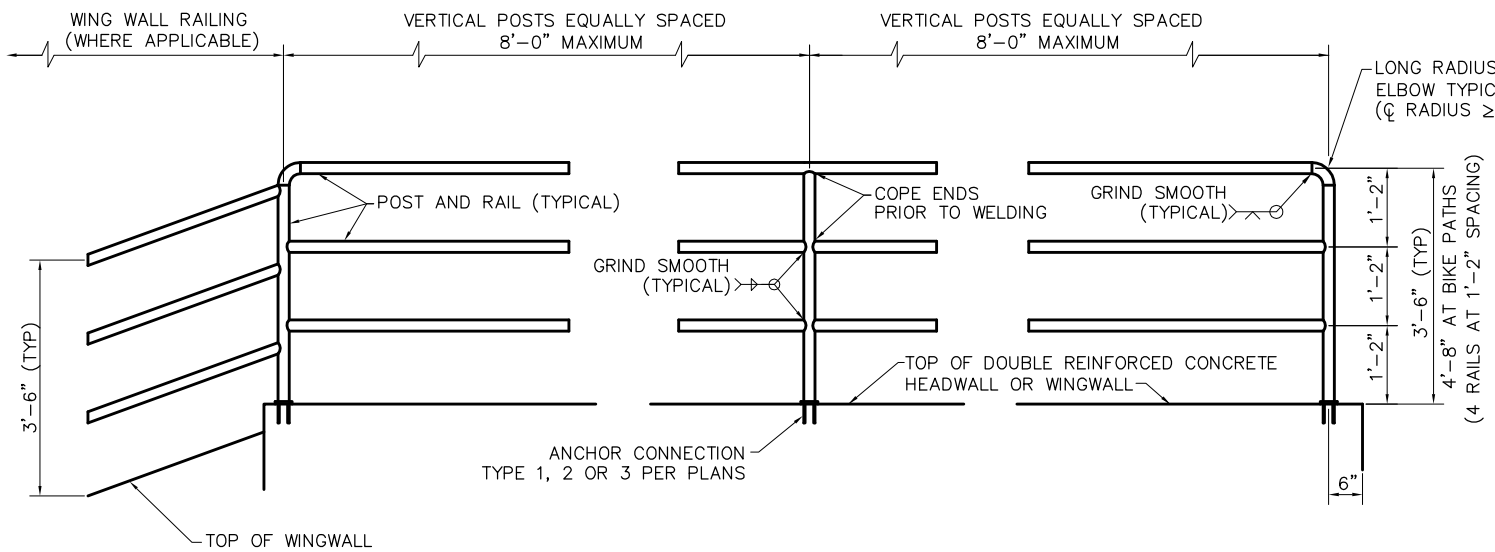

ELEVATION

NOTES:

1. POSTS AND RAILS SHALL BE 1.90 INCH OUTSIDE DIAMETER HIGH STRENGTH HEAVY INDUSTRIAL STEEL PIPE CONFORMING TO ASTM F1043 MATERIAL GROUP IA-2 (2.72 LB/FT, MINIMUM YIELD STRENGTH = 50 KSI) OR MATERIAL GROUP IC GALVANIZED AFTER FORMING (2.28 LB/FT, MINIMUM YIELD STRENGTH = 50 KSI).
2. PAINT RAIL PER MAG SPECIFICATIONS SECTION 530 WHEN REQUIRED BY PLANS. SHOP PRIME WITH RUST INHIBITING PRIMER (FIELD REPAIR PRIMER AS NEEDED). COLOR PER PLANS.
3. VERTICAL POSTS TO BE EVENLY SPACED.
4. REMOVE ALL SHARP EDGES.
5. INSTALL SAFETY RAIL AS REQUIRED BY PLANS OR SPECIFICATIONS.
6. THE EMBEDMENT FOR ANCHOR TYPES 1, 2 AND 3 SHALL BE LOCATED INSIDE THE WALL REINFORCEMENT CAGE.
7. SAFETY RAIL IS NOT TO BE USED AS A PEDESTRIAN BRIDGE RAIL.

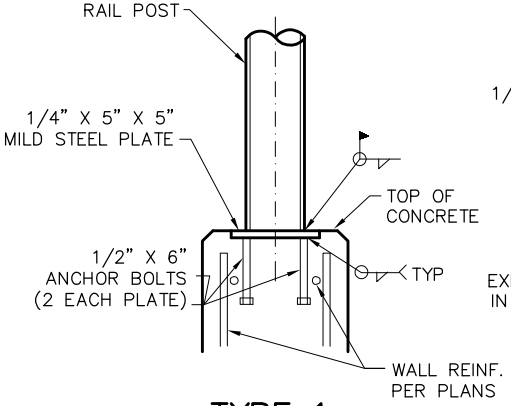

TYPE 1

ANCHOR PLATE DETAIL

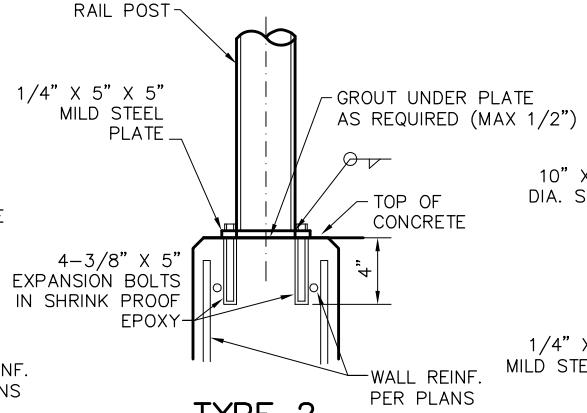

TYPE 2

EXPANSION BOLT DETAIL

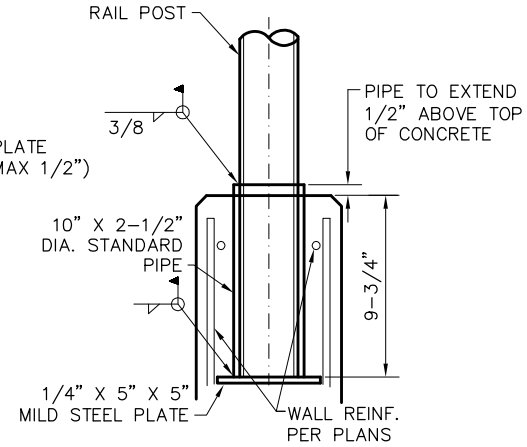

TYPE 3

PIPE SLEEVE DETAIL

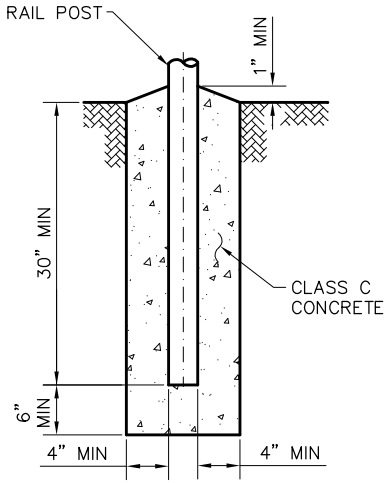

TYPE 4

GROUND INSTALLATION DETAIL

NOTE: SEE PLANS FOR ANCHORAGE DETAILS FOR ATTACHMENT TO SINGULARLY REINFORCED AND NON-REINFORCED WALLS.

DETAIL NO.				REVISED	DETAIL NO.
145	MARICOPA ASSOCIATION of GOVERNMENTS	STANDARD DETAIL ENGLISH	SAFETY RAIL	01-01-2016	145

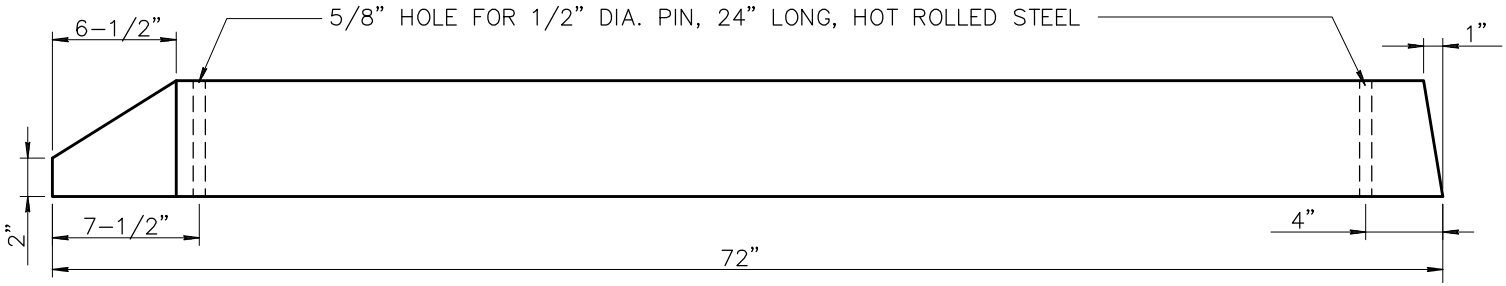

TYPE A

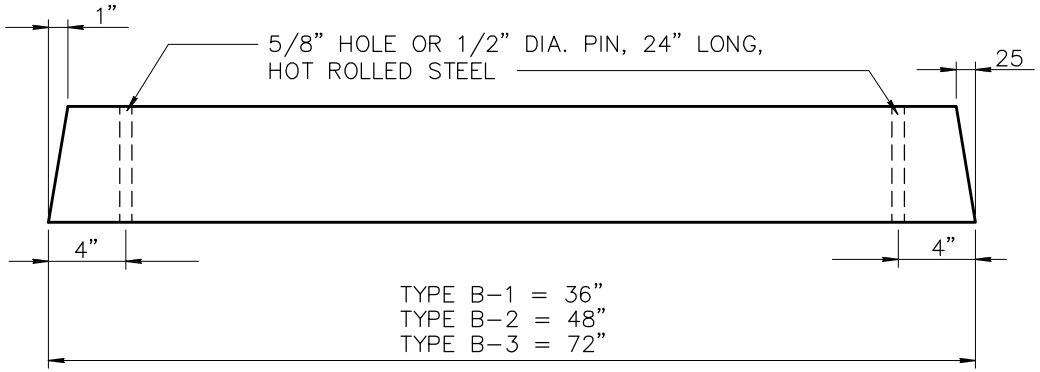

TYPE B-1, B-2, AND B-3

NOTES:

1. DIMENSIONAL AND REINFORCEMENT CHANGES WILL BE PERMITTED UPON PRIOR WRITTEN APPROVAL OF THE ENGINEER.
2. UNLESS OTHERWISE NOTED, CONCRETE SHALL BE CLASS 'A' PER SECTION 725.

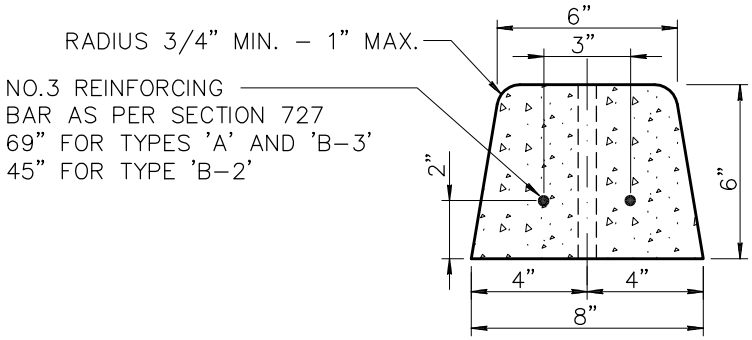

TYPICAL SECTION

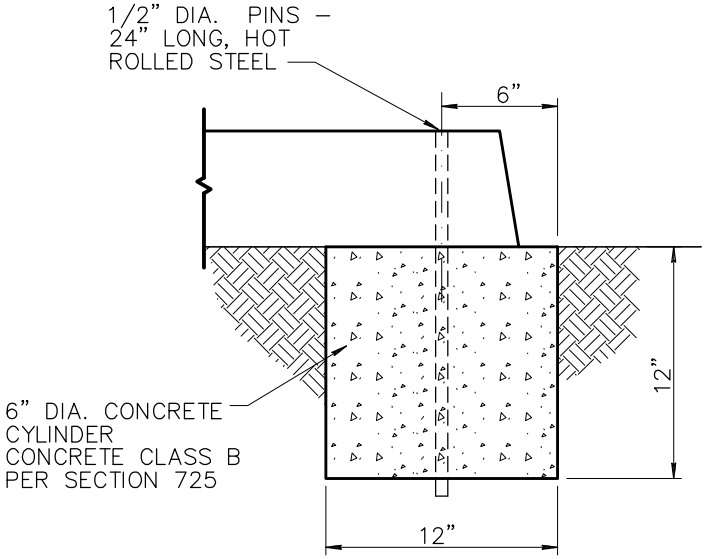

SAFETY CURB INSTALLATION ON DIRT

DETAIL NO.				REVISED	DETAIL NO.
150	MARICOPA ASSOCIATION of GOVERNMENTS	STANDARD DETAIL ENGLISH	PRECAST SAFETY CURB	01-01-1998	150

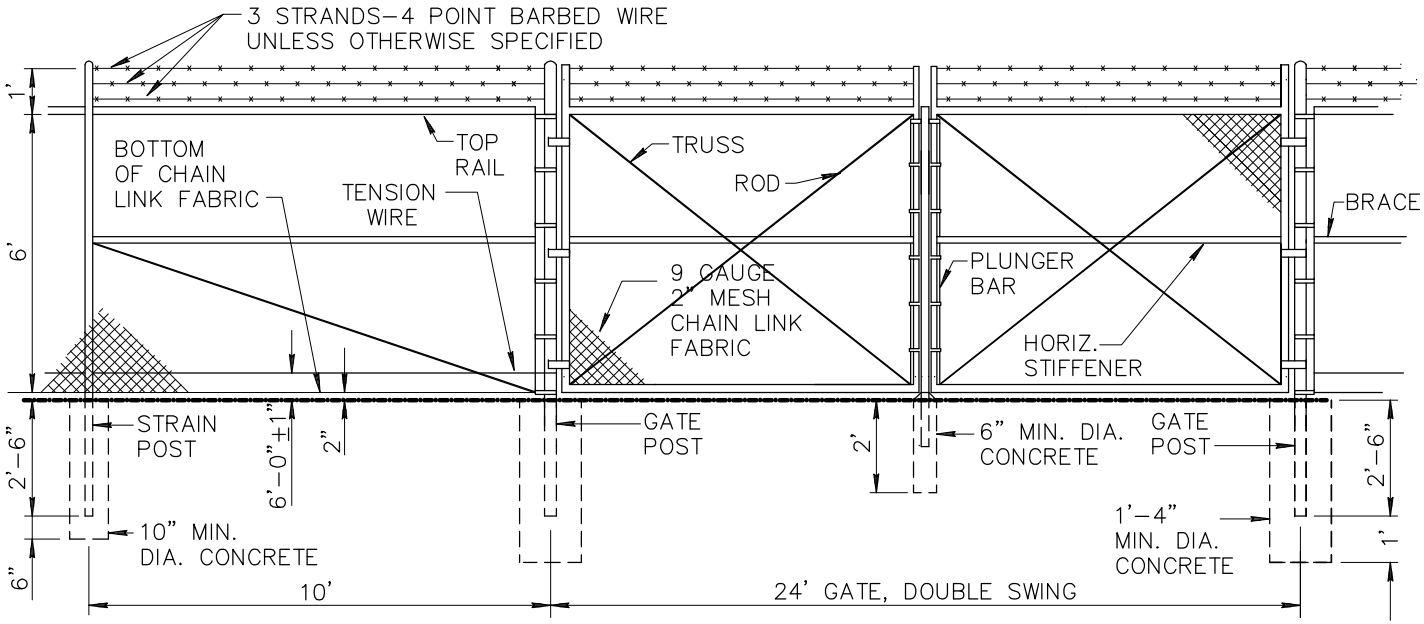

NOTES

1. ALL CONCRETE SHALL BE CLASS 'C' PER SECT. 725.
2. FITTINGS NOT SPECIFICALLY DETAILED SHALL BE HEAVY DUTY DESIGN.
3. STRAIN POSTS SHALL BE SPACED AT 500' MAXIMUM SPACING.
4. BOTH CORNER AND STRAIN POSTS SHALL HAVE STRAIN PANELS.
5. ALL POSTS SHALL BE CAPPED.
6. MEMBER SIZES SHALL BE THE FOLLOWING:

MEMBER	AISC SIZE	OUTSIDE DIA.
CORNER POST	2–1/2"	2.875"
LINE POST	1–1/2"	1.900"
STRAIN POST	1–1/2"	1.900"
BRACE	1–1/4"	1.666"
STRETCH BAR	3/16"x3/4" FLAT	3/16"x3/4" FLAT
GATE POST	3–1/2"	4.000"
TOP RAIL	1–1/4"	1.666"

7. CONSTRUCTION AND MATERIALS SHALL CONFORM TO SECT. 420 AND 772, RESPECTIVELY. SEE TABLE 772–1 FOR WEIGHTS OF MEMBERS.

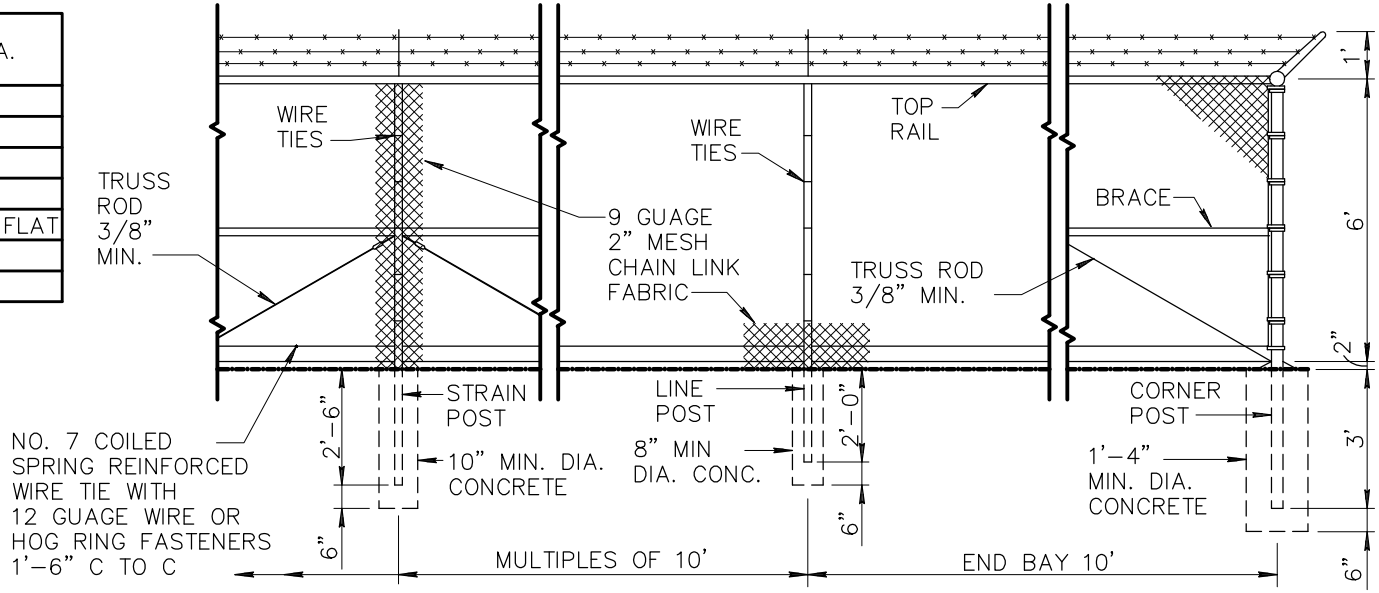

DETAIL NO.				REVISED	DETAIL NO.
160	MARICOPA ASSOCIATION of GOVERNMENTS	STANDARD DETAIL ENGLISH	6' CHAIN LINK FENCE AND GATE	01–01–2013	160

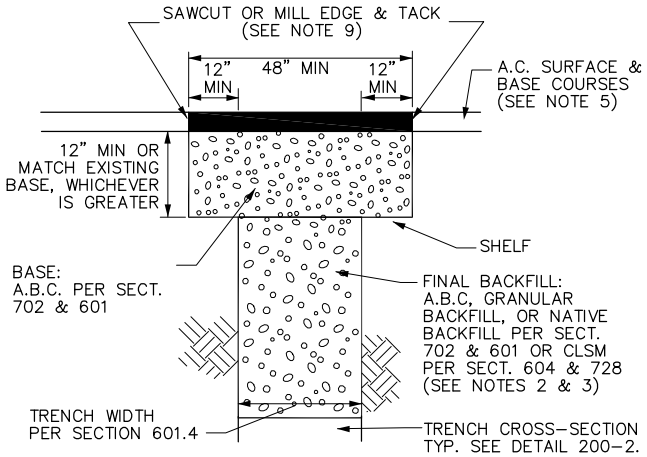

"T TOP" TRENCH REPAIR

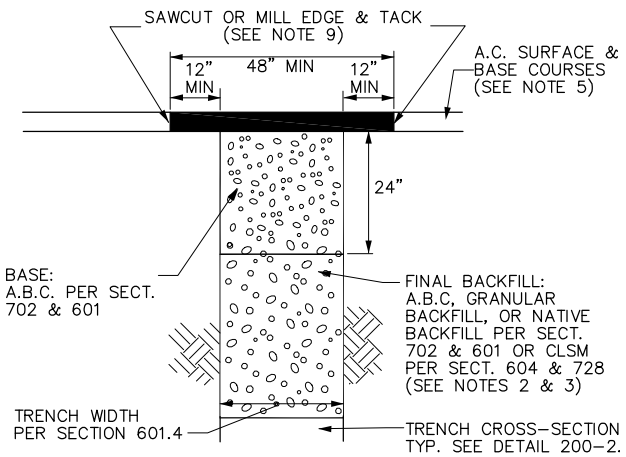

TYPE "A" TRENCH REPAIR

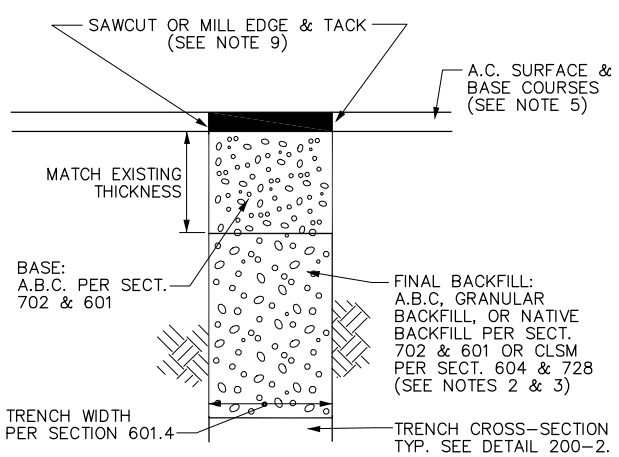

TYPE "B" TRENCH REPAIR

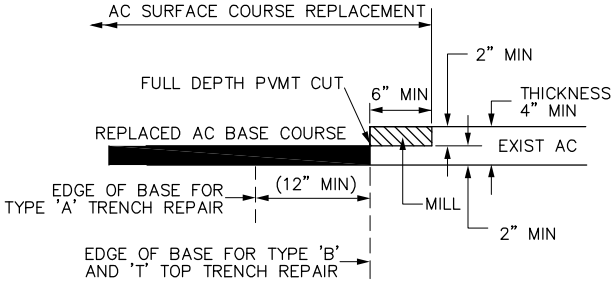

OFFSET JOINT

(FOR PAVEMENT ≥ 4" THICK)

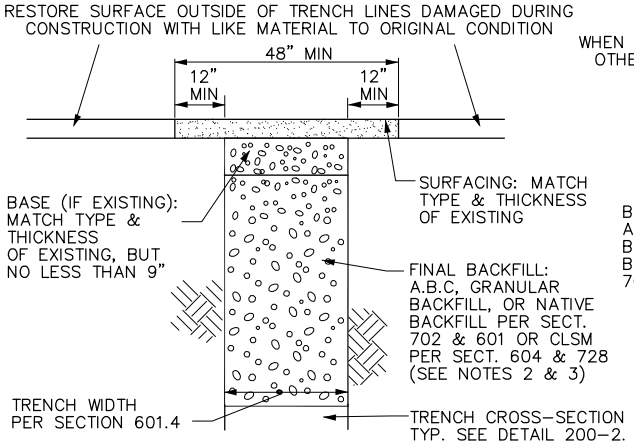

TYPE "D" TRENCH REPAIR

(TRENCH NOT UNDER CONCRETE OR ASPHALT PAVEMENT)

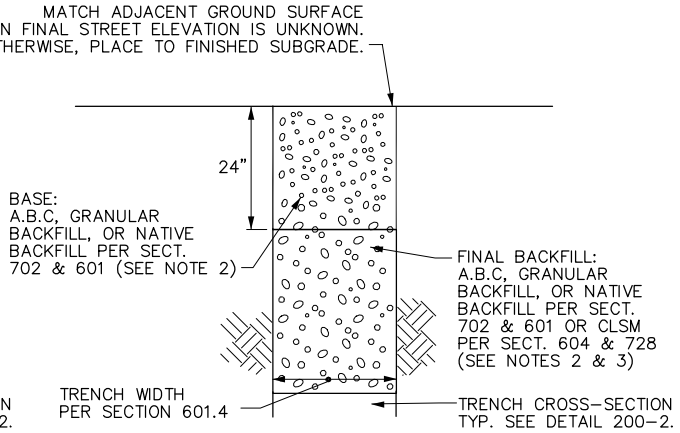

TYPE "E" TRENCH REPAIR

(TRENCH IN FUTURE ROADWAY PRISM OR ALLEY)

NOTES:

1. PAVEMENT MATCHING AND SURFACE REPLACEMENT SHALL BE IN ACCORDANCE WITH SECTION 336.
2. MATERIAL FOR FINAL BACKFILL AND BASE (IF APPLICABLE) SHALL BE AS NOTED HEREIN UNLESS OTHERWISE SPECIFIED IN CONTRACT DOCUMENTS. CLSM SHALL BE 1/2-SACK OR 1-SACK PER SECTIONS 604 AND 728.
3. FINAL BACKFILL SHALL BE 1/2-SACK OR 1-SACK CLSM PER SECTIONS 604 AND 728 FOR TRENCH DEPTHS GREATER THAN 4 FEET UNLESS A SAFE (OHSA COMPLIANT) WORKING SPACE AT LEAST 30" WIDE IS PROVIDED TO CONDUCT COMPACTION TESTING.
4. BASE, FINAL BACKFILL, AND PIPE EMBEDMENT ZONE COMPACTION SHALL BE IN ACCORDANCE WITH SECTION 601.
5. ASPHALT CONCRETE SURFACE AND BASE COURSES SHALL COMPLY WITH SECTION 336.2.4.1 UNLESS OTHERWISE SPECIFIED IN CONTRACT DOCUMENTS.
6. USE TYPE "A" FOR LONGITUDINAL TRENCH REPAIR AND USE "T-TOP" FOR TRANSVERSE TRENCH REPAIR (SEE DETAIL 200-2) UNLESS OTHERWISE SPECIFIED IN CONTRACT DOCUMENTS. TYPE "B" TRENCH REPAIR MAY BE USED FOR TRANSVERSE TRENCH REPAIR IF SPECIFIED BY THE AGENCY.
7. PROVIDE MINIMUM 12" WIDE SHELF AS SHOWN IN "T-TOP" TRENCH REPAIR AT ENDS OF TYPE "A" TRENCH REPAIR EXCEPT WHERE EDGE ABUTS EXISTING CONCRETE.
8. USE "T-TOP" PAVEMENT REPLACEMENT WHERE A TRENCH IS NOT PARALLEL TO A STREET OR GOES THROUGH AN INTERSECTION.
9. THE JOINT LOCATION OR JOINT CONFIGURATION MAY VARY FROM THAT SHOWN TO ELIMINATE REMNANTS, TO ELIMINATE FULL DEPTH SAWCUT JOINTS FROM BEING LOCATED WITHIN A WHEEL PATH AS REQUIRED BY SECTION 336, OR WHEN AN OFFSET JOINT IS CONSTRUCTED.
10. SEE DETAIL 200-2 FOR REMNANT PAVEMENT REMOVAL REQUIREMENTS.
11. EXPOSED COPPER OR POLYETHYLENE WATER PIPE UP TO 2" IN DIAMETER IN TRENCHES TO BE BACKFILLED WITH CLSM SHALL BE WRAPPED WITH MINIMUM 3/4" THICK PREFORMED PIPE-COVERING FOAM INSULATION BEFORE PLACING CLSM.

DETAIL NO.		STANDARD DETAIL		PROPOSED	DETAIL NO.
200-1	MARICOPA ASSOCIATION of GOVERNMENTS	ENGLISH	TRENCH BACKFILL AND SURFACE REPLACEMENT	01-01-2016	200-1

LONGITUDINAL TRENCH

(TRENCH IN PAVEMENT PARALLEL TO TRAFFIC)

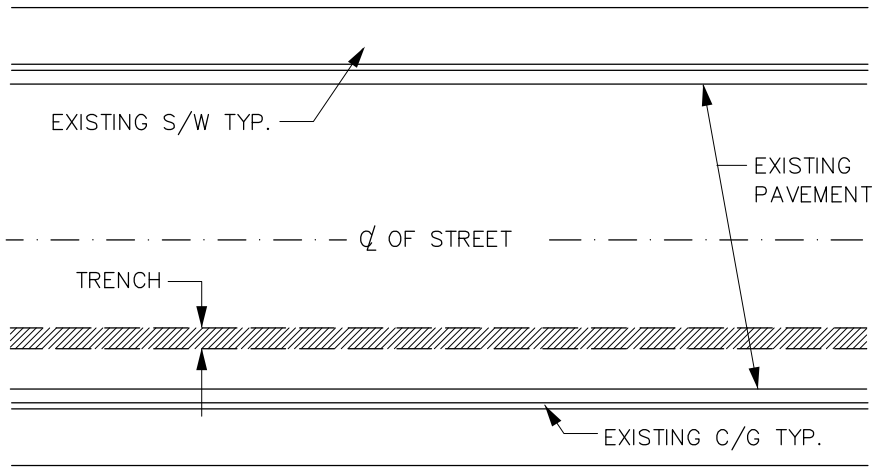

TRANSVERSE TRENCH

(TRENCH IN PAVEMENT NOT PARALLEL TO TRAFFIC)

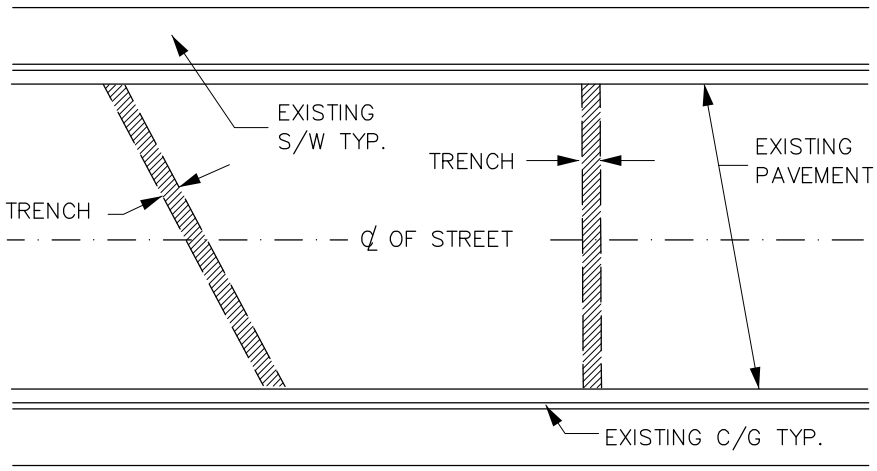

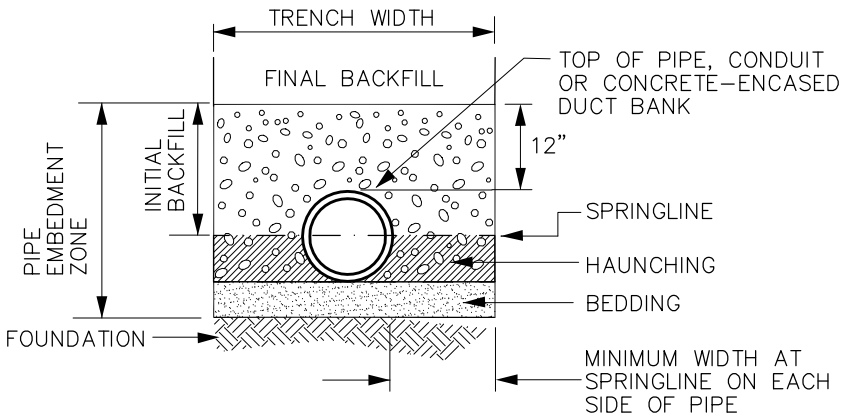

TRENCH CROSS-SECTION DETAIL

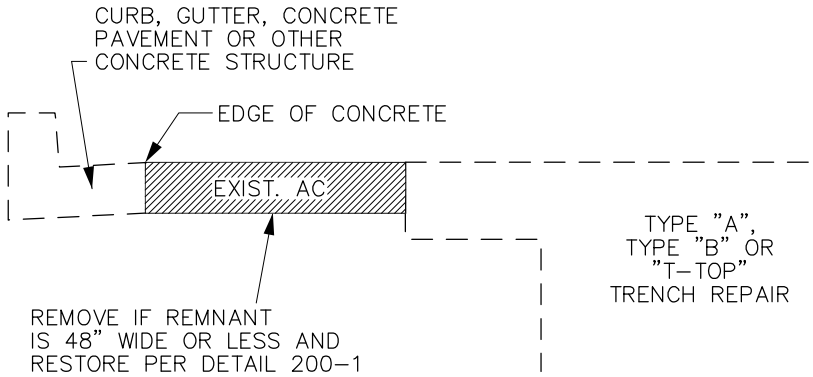

REMNANT PAVEMENT REMOVAL

NOTES:

1. SEE SECTION 601 FOR TRENCH EXCAVATION, BACKFILLING AND COMPACTION REQUIREMENTS.
2. SEE DETAIL 200-1 FOR DETAILED TRENCH REPAIR REQUIREMENTS FOR TRENCH TYPES NOTED HEREIN.
3. SEE DETAIL 211 FOR REQUIREMENTS REGARDING THE USE OF PLATING TRANSVERSE TRENCHES. USE OF STEEL PLATES SHALL NOT EXCEED 72 HOURS AFTER COMPLETION OF BACKFILL AND PRIOR TO FINAL PATCHING.

DETAIL NO.				PROPOSED	DETAIL NO.
200-2	MARICOPA ASSOCIATION of GOVERNMENTS	STANDARD DETAIL ENGLISH	TRENCH BACKFILL AND SURFACE REPLACEMENT	01-01-2016	200-2

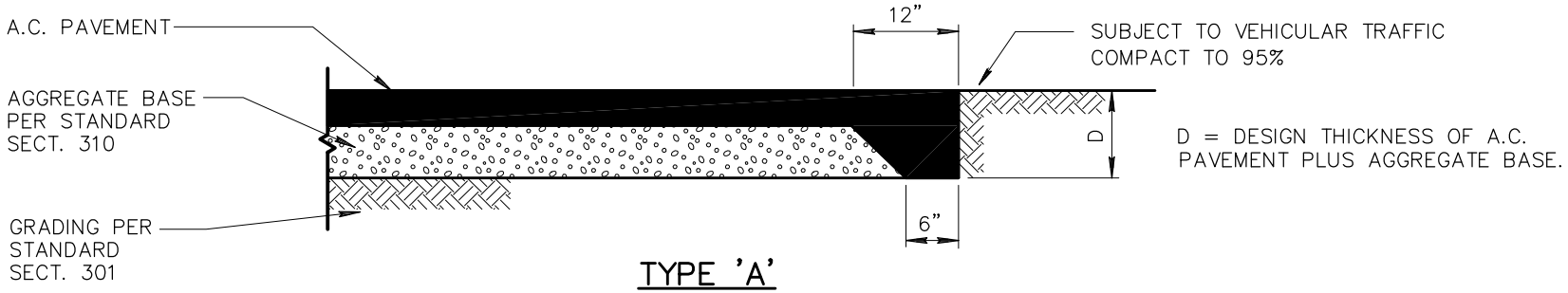

TYPE 'A'

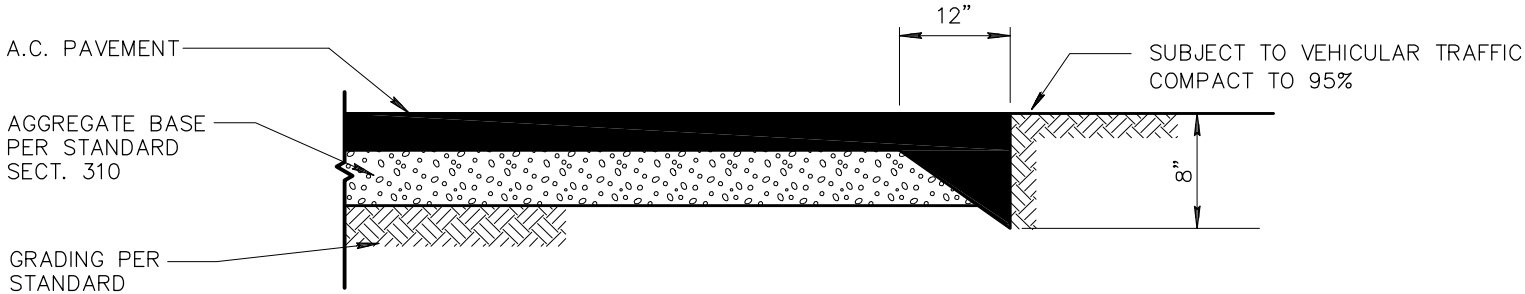

TYPE 'B'

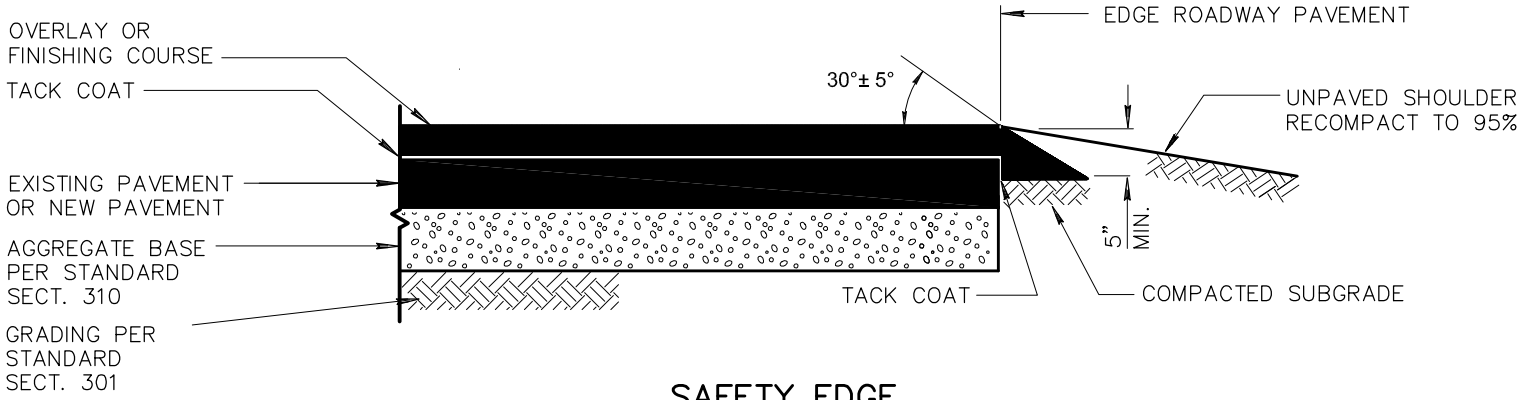

SAFETY EDGE

DETAIL NO.		STANDARD DETAIL		DATE	DETAIL NO.
201	MARICOPA ASSOCIATION of GOVERNMENTS	ENGLISH	ASPHALT PAVEMENT EDGE DETAILS	01-01-2014	201

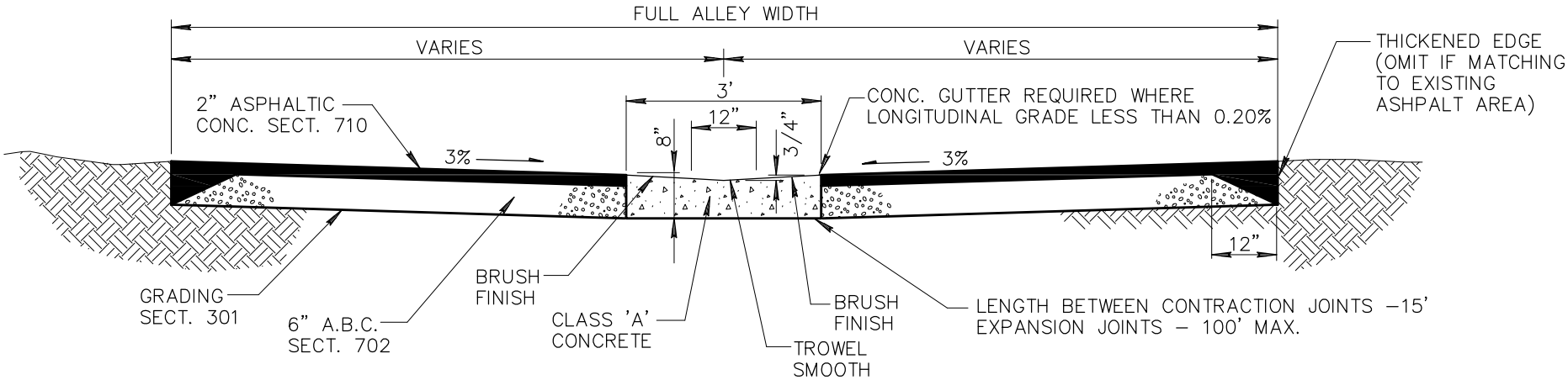

PAVED ALLEY DETAIL

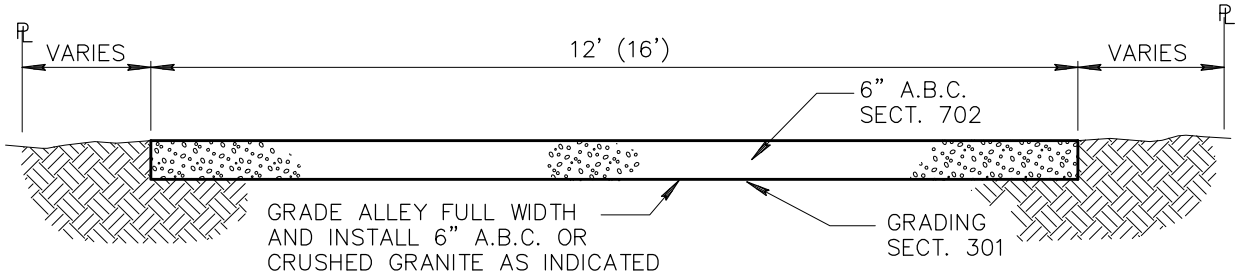

UNPAVED ALLEY DETAIL

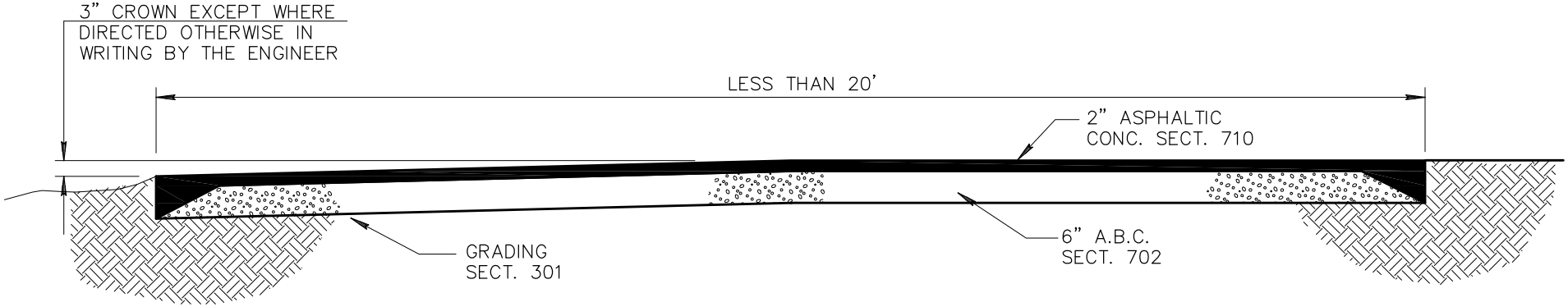

RESIDENTIAL ALLEY DETAIL

DETAIL NO.				REVISED	DETAIL NO.
202	MARICOPA ASSOCIATION of GOVERNMENTS	STANDARD DETAIL ENGLISH	ALLEY DETAILS (PAVED AND UNPAVED)	01–01–1998	202

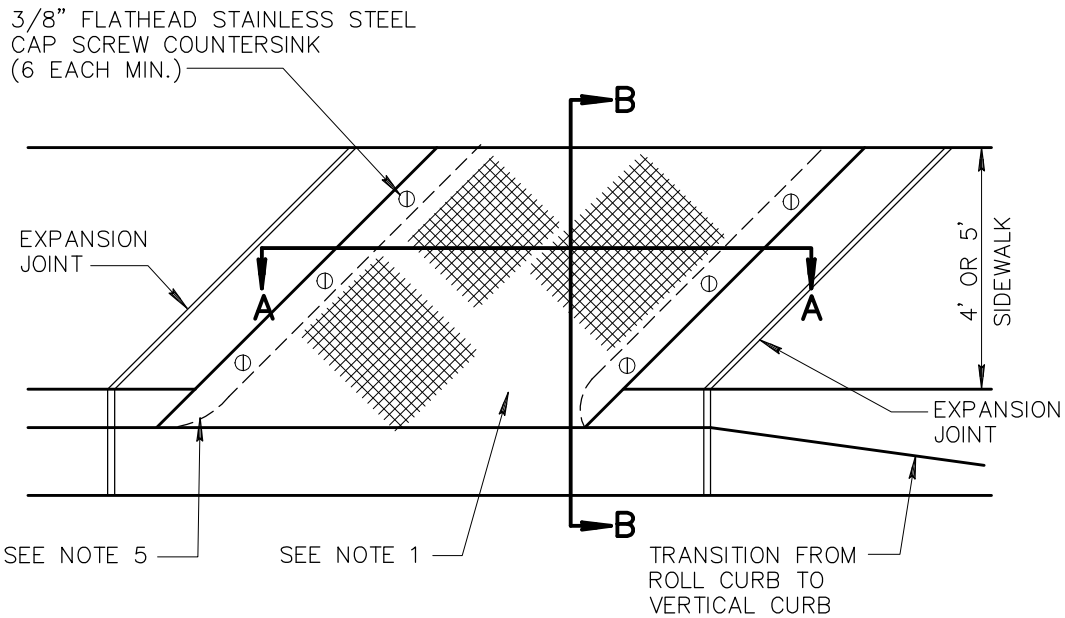

NOTES:

1. ANGLE EQUALS 45° UNLESS SPECIFIED ON PLAN.
2. DIMENSION 'B' EQUALS 'A' + 2'
3. (——►) INDICATES DIRECTION OF FLOW.
4. PAINT STEEL ACCORDING TO SECTION 790. PAINT NUMBER 1–A OR 1–B.
5. R EQUALS 1" UNLESS OTHERWISE DIRECTED.
6. H EQUALS CURB FACE HEIGHT.
7. FOR ROLL CURB AND GUTTER, USE 2' TRANSITIONS TO VERTICAL CURB.
8. CONCRETE SHALL BE CLASS B PER SECT. 725 AND INSTALLED PER SECT. 505.

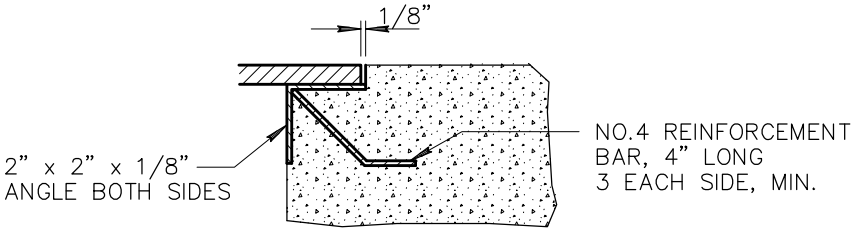

DETAIL C

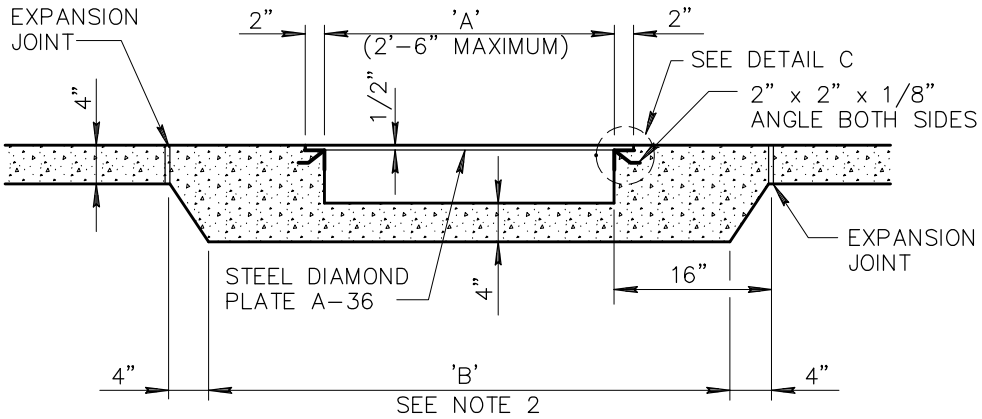

SECTION 'A–A'

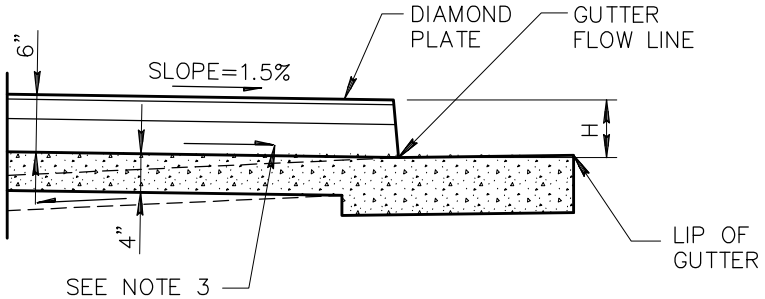

SECTION 'B–B'

DETAIL NO.				REVISED	DETAIL NO.
203	MARICOPA ASSOCIATION of GOVERNMENTS	STANDARD DETAIL ENGLISH	SCUPPERS	01–01–1998	203

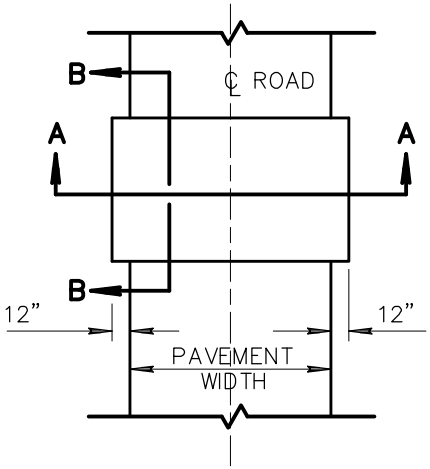

PLAN OF CONCRETE EQUIPMENT CROSSING

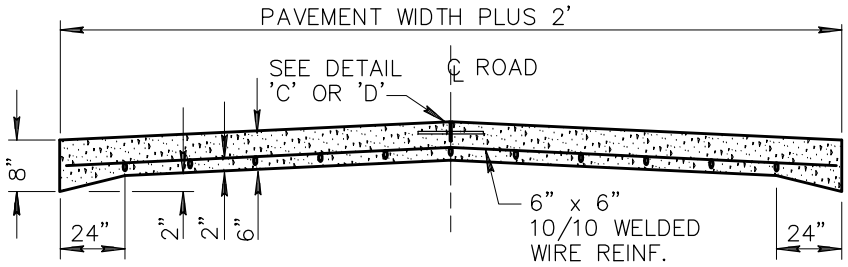

SECTION A–A

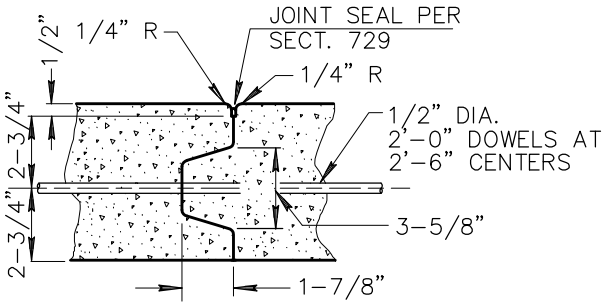

LONGITUDINAL JOINT DETAIL 'C'

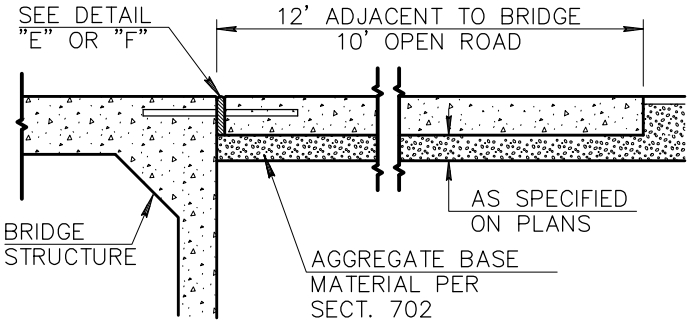

SECTION B–B

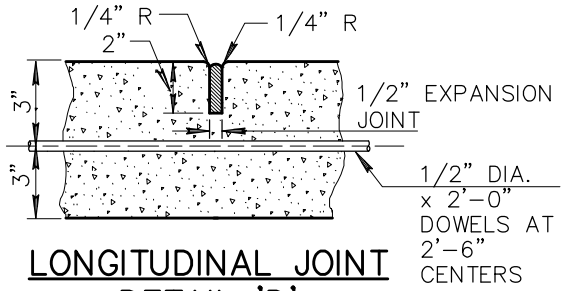

LONGITUDINAL JOINT DETAIL 'D'

NOTES:

1. WHEN EQUIPMENT CROSSING LIES ADJACENT TO BRIDGE OR BOX CULVERT, CONSTRUCT THE EQUIPMENT CROSSING TO WIDTH OF BRIDGE ROADWAY.
2. ALL DOWELS IN CENTER JOINTS SHALL BE DEFORMED BARS AND SHALL HAVE UNBROKEN BOND. THEY SHALL BE HELD SECURELY IN PLACE, PARALLEL TO THE SUBGRADE AND PERPENDICULAR TO THE CENTER LINE OF THE ROAD.
3. THE EDGING TOOL USED FOR ALL LONGITUDINAL JOINTS SHALL BE SO CONSTRUCTED AS TO PROVIDE A SMOOTH TROWELED SURFACE 3" WIDE ON EACH SIDE OF THE JOINT.
4. IF APPROVED BY THE ENGINEER, OTHER DEFORMATIONS MAY BE USED IN LONGITUDINAL JOINT – DETAIL 'C'.
5. DETAIL 'C' TO BE USED ONLY WHEN FULL WIDTH CAN NOT BE POURED IN ONE POUR. USE DETAIL 'D' IF FULL WIDTH IS POURED IN ONE POUR.

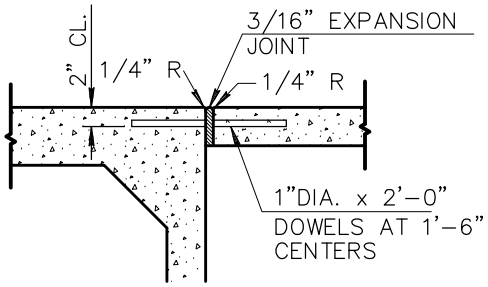

JOINT AT NEW BRIDGE DETAIL 'F'

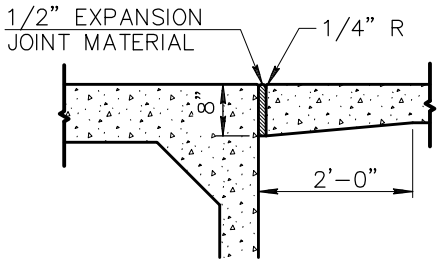

JOINT AT EXISTING BRIDGE DETAIL 'E'

DETAIL NO.				REVISED	DETAIL NO.
204	MARICOPA ASSOCIATION of GOVERNMENTS	STANDARD DETAIL ENGLISH	EQUIPMENT CROSSING	01–01–1998	204

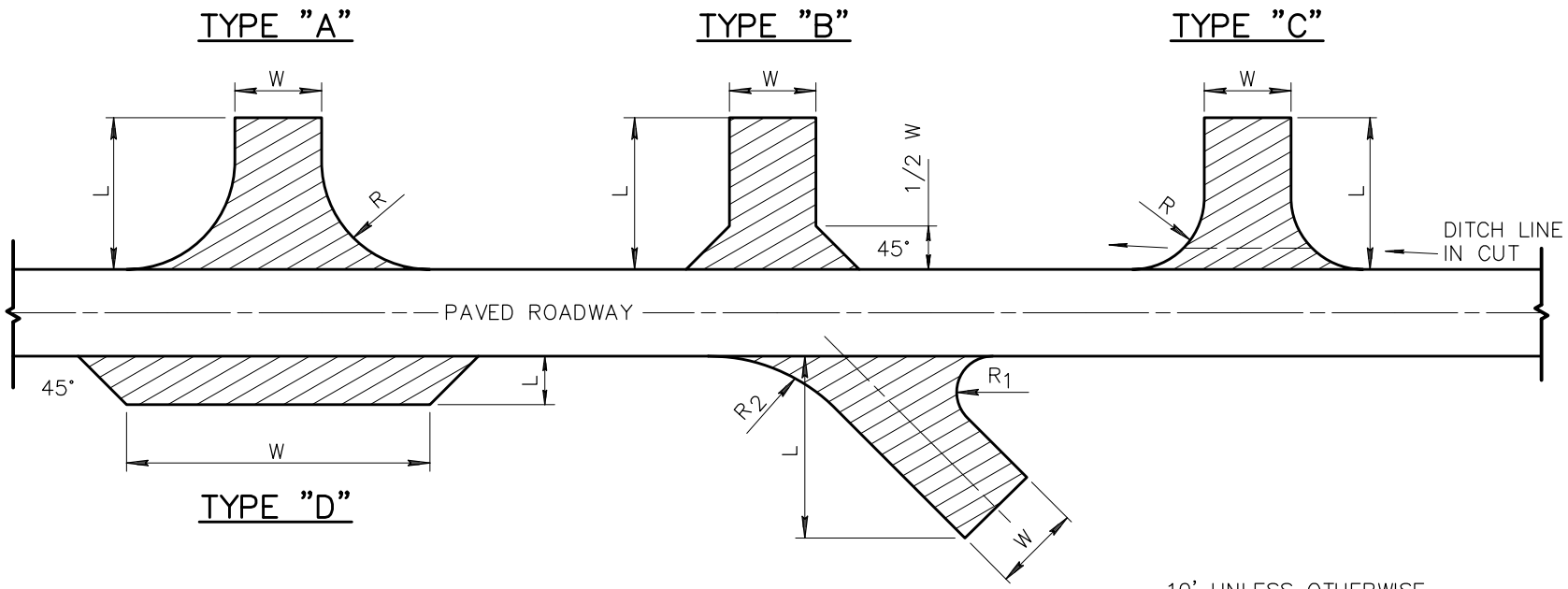

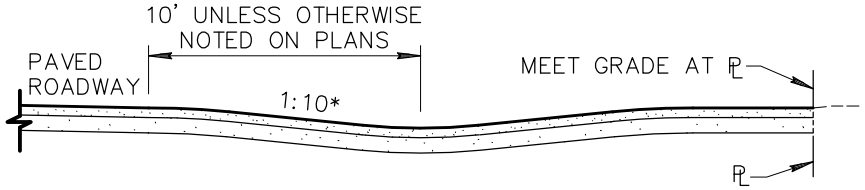

TYPICAL VALLEY GUTTER TURNOUT

TYPICAL STRAIGHT TURNOUT

NOTES:

1. W – INDICATES WIDTH OF PAVED SURFACE OF TURNOUT.
   L – INDICATES LENGTH OF PAVED SURFACE OF TURNOUT.
   R – RADIUS.

2. SIZE AND TYPE OF TURNOUT SHALL BE NOTED ON PLANS AS FOLLOWS:
   90° – NO RADIUS: WxL–SURFACE–TYPE; (12' x 30'–A.C.–TYPE "B" TURNOUT).
   90° – WITH A RADIUS: WxLxR–SURFACE–TYPE; (12' x 20' x 15'–A.C.–TYPE "C" TURNOUT). OTHER THAN 90° WITH 2 RADII–TYPE "S": $W x L x R_1 x R_2$–SURFACE–TYPE; (12' x 20' x 15'–A.C.–TYPE "S" TURNOUT).
   OR IT MAY BE NOTED ON PLANS IN CONVENTIONAL TERMS.

3. TURNOUTS TO BE STRAIGHT TYPE UNLESS OTHERWISE NOTED ON PLANS.

4. A.C. AND BASE MATERIAL THICKNESS FOR TURNOUTS SHALL BE THE SAME AS SHOWN ON THE ROADWAY SECTION, UNLESS OTHERWISE NOTED.

5. ANY EXCAVATION OR EMBANKMENT FOR TURNOUTS IS INCLUDED IN THE ROADWAY QUANTITIES.

6. TURNOUTS ARE TO BE PLACED WHERE SHOWN ON PLANS, OR AS DIRECTED BY THE ENGINEER.

* UNLESS OTHERWISE NOTED ON PLANS

DETAIL NO.			REVISED	DETAIL NO.
205	MARICOPA ASSOCIATION of GOVERNMENTS — STANDARD DETAIL ENGLISH	PAVED TURNOUTS	01–01–2006	205

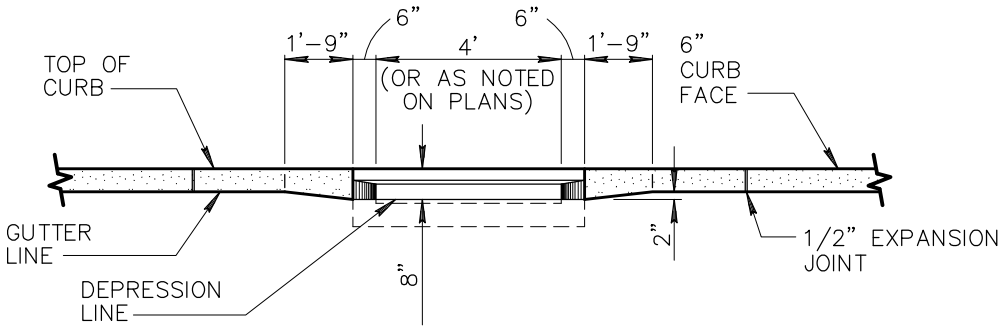

SECTION A–A

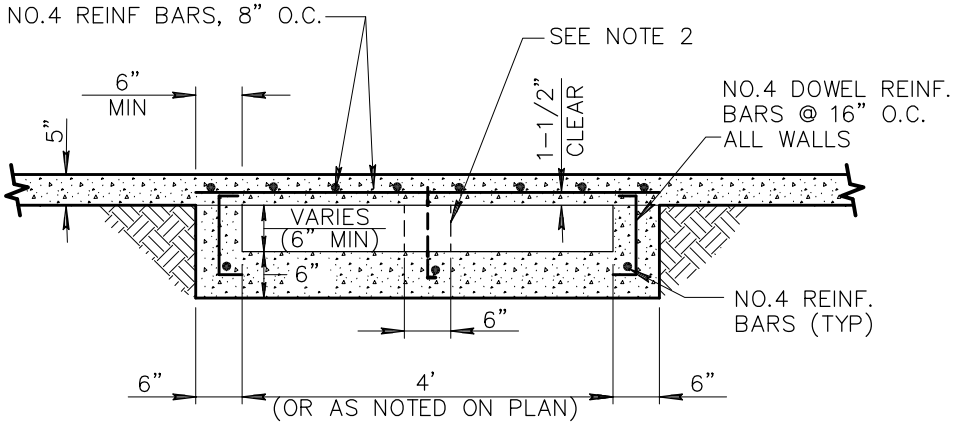

SECTION B–B

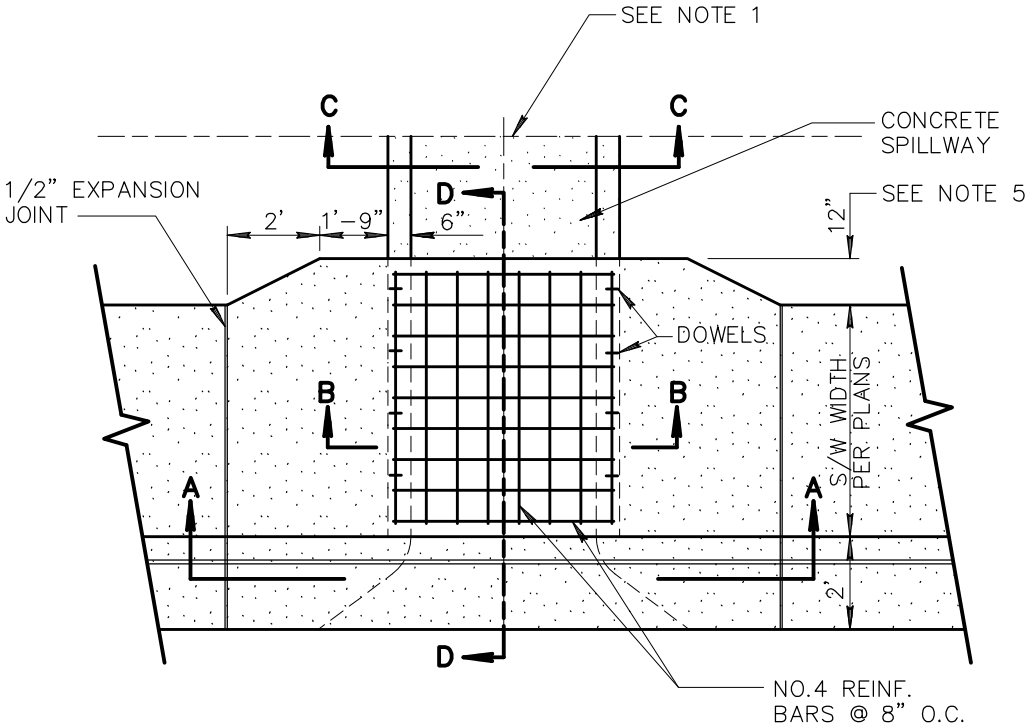

SCUPPER PLAN VIEW

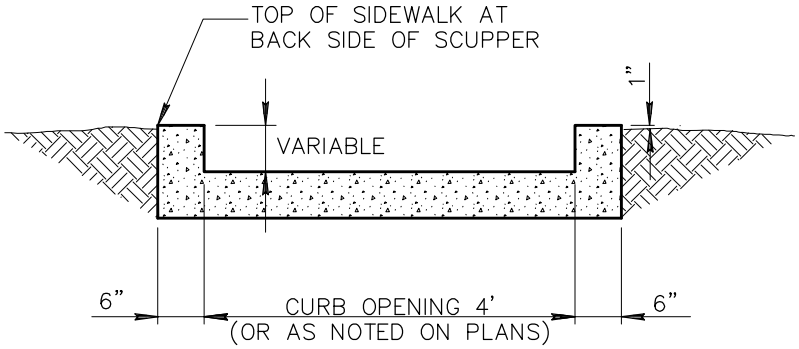

SECTION C–C SPILLWAY

NOTES:

1. TRANSITION TO SPILLWAY/CHANNEL AS PER APPROVED PLANS.
2. A CENTER WALL SHALL BE INSTALLED IN SCUPPERS WIDER THAN 4' OR IF MORE THAN 1 SCUPPER IS BUILT IN SERIES.
3. EXPANSION JOINT FILLER SHALL BE 1/2" BITUMINOUS TYPE PREFORMED EXPANSION JOINT FILLER, ASTM D–1751.
4. CONCRETE FOR THE SCUPPER SHALL BE CLASS 'A' PER SECTION 725. CONCRETE FOR THE SPILLWAY SHALL BE CLASS 'A' OR CLASS 'B'.
5. 12" OFFSET DISTANCE SHALL BE INCREASED TO 2'–6" FOR DESIGNATED BICYCLE PATHS.

DETAIL NO.				REVISED	DETAIL NO.
206–1	MARICOPA ASSOCIATION of GOVERNMENTS	STANDARD DETAIL ENGLISH	CONCRETE SCUPPER	01–01–2007	206–1

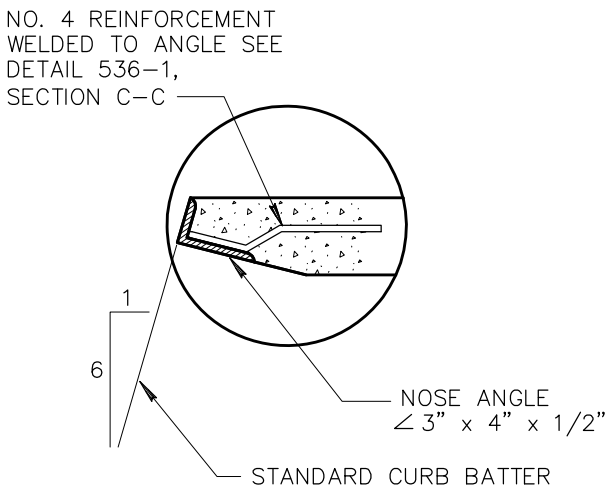

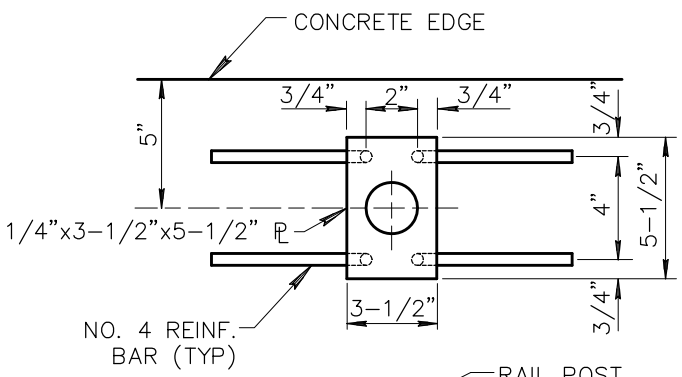

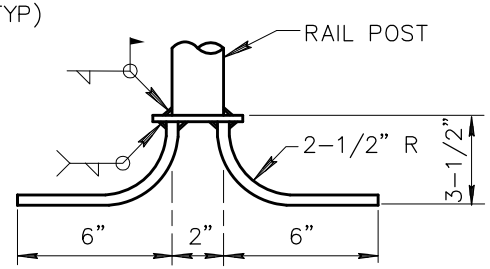

WELD PLATE

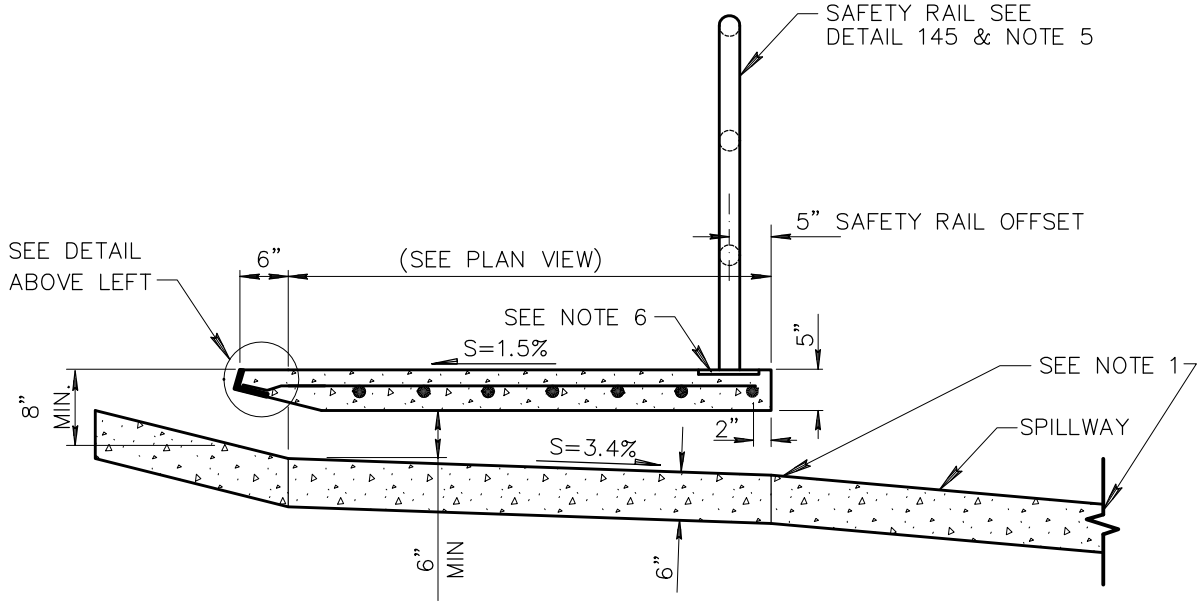

SECTION D-D

NOTES:

1. TRANSITION TO SPILLWAY/CHANNEL AS PER APPROVED PLANS.
2. A CENTER WALL SHALL BE INSTALLED IN SCUPPERS WIDER THAN 4' OR IF MORE THAN 1 SCUPPER IS BUILT IN SERIES.
3. EXPANSION JOINT FILLER SHALL BE 1/2" BITUMINOUS TYPE PREFORMED EXPANSION JOINT FILLER, ASTM D-1751.
4. CONCRETE FOR THE SCUPPER SHALL BE CLASS 'A' PER SECTION 725. CONCRETE FOR THE SPILLWAY SHALL BE CLASS 'A' OR CLASS 'B'.
5. SAFETY RAIL SHALL BE CONTINUOUS BETWEEN THE SPILLWAY EXTERIOR WALLS.
6. USE WELD PLATES FOR SAFETY RAIL ANCHORS LOCATED IN THE 5" THICK CONCRETE.

DETAIL NO.				REVISED	DETAIL NO.
206-2	MARICOPA ASSOCIATION of GOVERNMENTS	STANDARD DETAIL ENGLISH	CONCRETE SCUPPER	01-01-2007	206-2

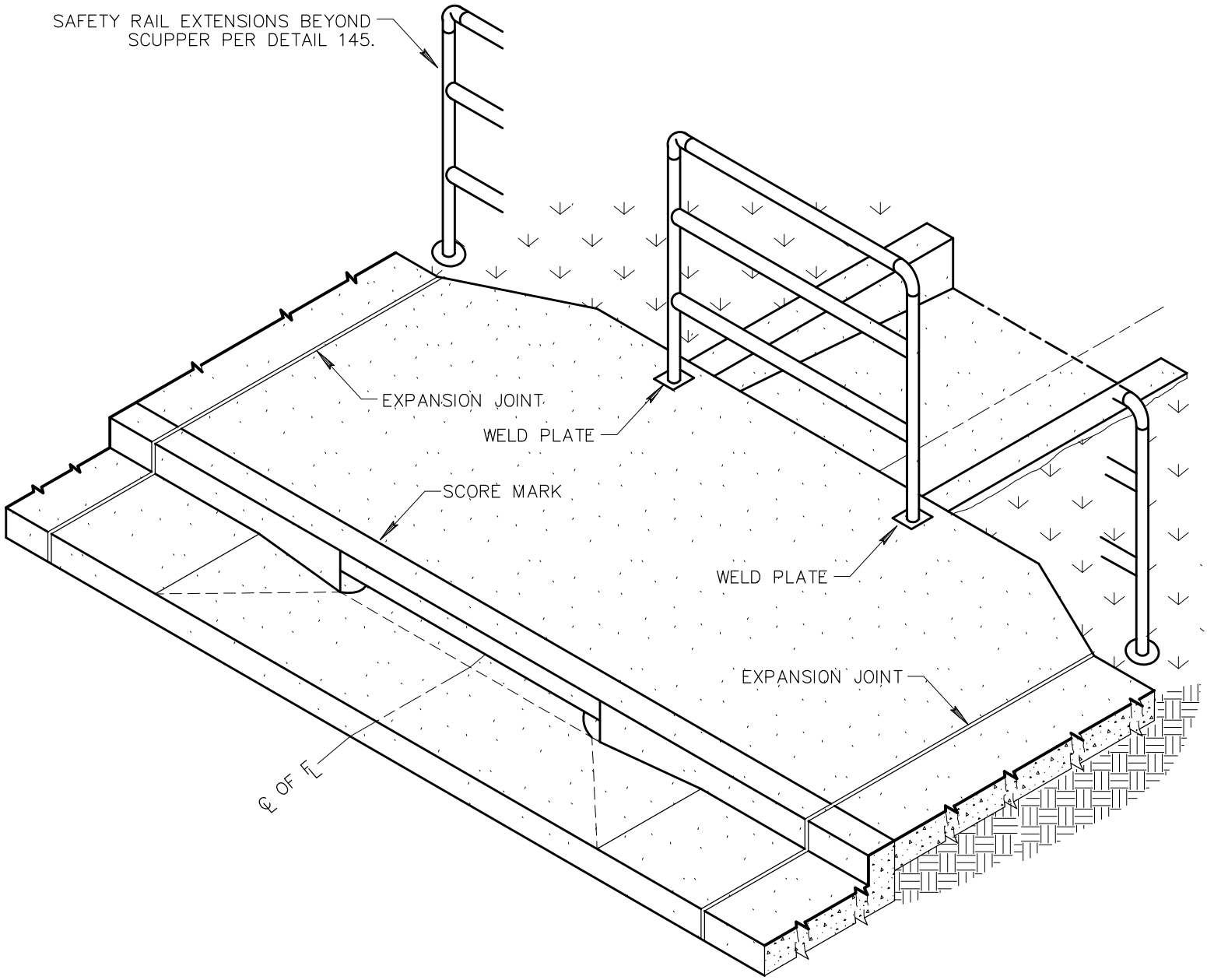

DETAIL NO.				REVISED	DETAIL NO.
206–3	MARICOPA ASSOCIATION of GOVERNMENTS	STANDARD DETAIL ENGLISH	CONCRETE SCUPPER	01–01–2007	206–3

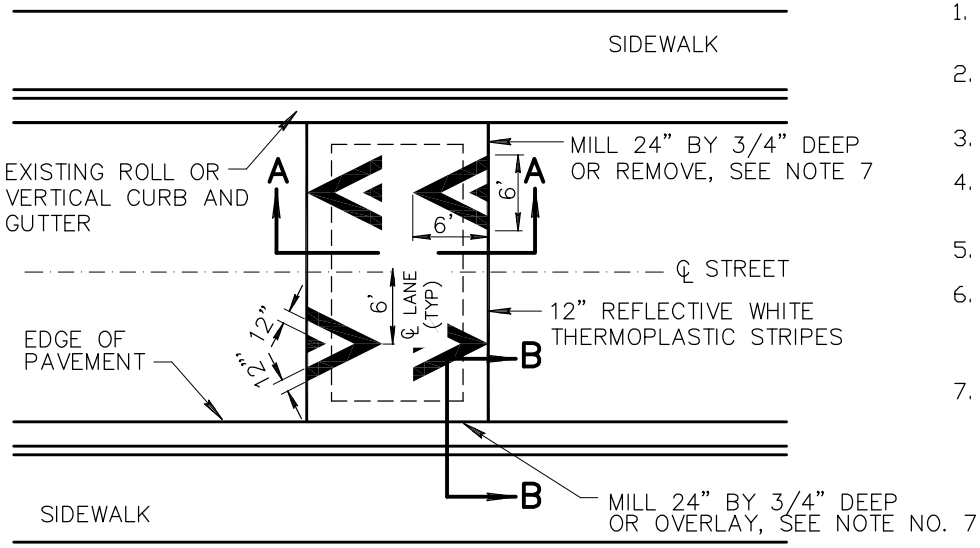

PLAN VIEW

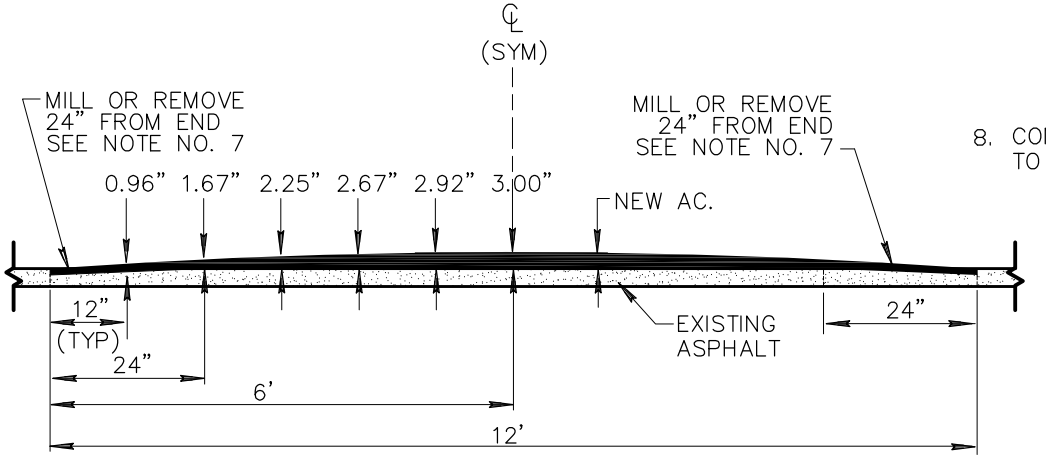

SECTION A–A

NOTES:

1. HUMPS MUST BE THE FULL 3" FOR MAXIMUM EFFECT BUT SHALL NOT EXCEED 3.25".
2. HUMPS CONSTRUCTED OVER 3.25" OR LESS THAN 3.00" SHALL BE REMOVED AND REPLACED AT THE CONTRACTOR'S EXPENSE.
3. CROSS–SECTION ELEVATIONS SHALL HAVE A MAXIMUM TOLERANCE OF +0.25".
4. SPEED HUMPS SHALL NOT BE PLACED OVER MANHOLES, WATER VALVES, SURVEY MONUMENTS, JUNCTION CHAMBERS, ETC. OR IN CONFLICT WITH DRIVEWAYS.
5. SPEED HUMPS MUST BE PLACED AT LOCATIONS APPROVED BY THE AGENCY.
6. HUMP TO BE CONSTRUCTED WITH ASPHALT MIX APPROVED BY THE AGENCY. ASPHALT COMPACTION SHALL BE PER SECTION 321. A TACK COAT PER SECTION 713 SHALL BE APPLIED PRIOR TO APPLICATION OF PAVEMENT.
7. INSTALLATION JOINTS:
   A. STANDARD INSTALLATION:
      THE EXISTING ROADWAY SHALL BE MILLED TO A MINIMUM DEPTH OF 3/4" AROUND THE PERIMETER. CROSS SECTION DIMENSIONS DO NOT INCLUDE THE 3/4" MILLING. CONTRACTOR MUST PROVIDE VERIFICATION OF CROSS–SECTION DIMENSIONS.
   B. ALTERNATIVE INSTALLATION:
      FOR TRANSVERSE JOINTS (CROSS ROADWAY), THE EXISTING ASPHALT SHALL BE SAW CUT AND REMOVED FOR A WIDTH OF 24". THE ASPHALT SHALL BE REPLACED WITH THE SAME ASPHALT AND AT THE SAME TIME AS THE HUMP ASPHALT. FOR LONGITUDINAL JOINTS, THE EXISTING ASPHALT SHALL BE OVERLAID AND TAPERED IN 12". CROSS–SECTION DIMENSIONS REFLECT DISTANCES FROM THE SURFACE OF EXISTING ASPHALT.
8. CONTACT THE AGENCY (OR INSPECTOR) ONE WEEK PRIOR TO INSTALLATION TO COORDINATE PAVEMENT MARKINGS AND SIGNING.

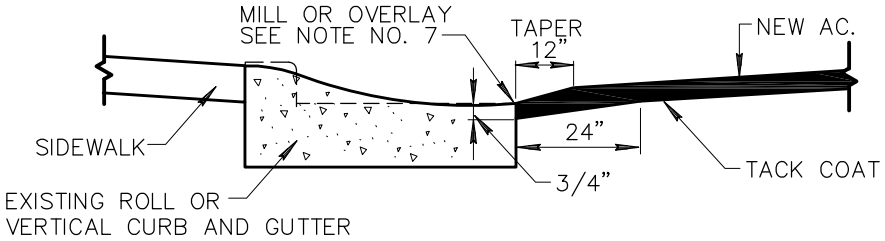

SECTION B–B

DETAIL NO.				REVISED	DETAIL NO.
210	MARICOPA ASSOCIATION of GOVERNMENTS	STANDARD DETAIL ENGLISH	RESIDENTIAL SPEED HUMP	01–01–2012	210

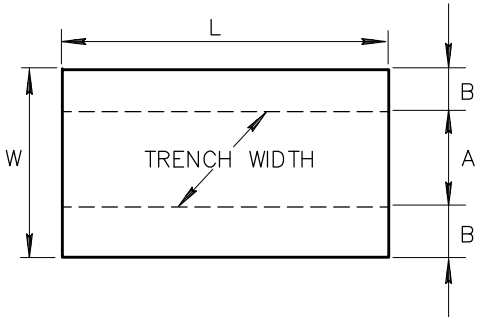

LONGITUDINAL STEEL PLATE

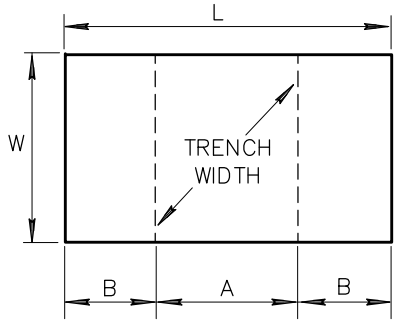

TRANSVERSE STEEL PLATE

NOTES:

1. USE TYPE 1 PLATE INSTALLATION WHERE POSTED SPEED LIMIT IS LESS THAN 30 MPH. USE TYPE 2 PLATE INSTALLATION WHERE POSTED SPEED LIMIT IS 30 MPH OR GREATER.
2. FOR TYPE 2 PLATE INSTALLATION, THE STEEL PLATE SHALL BE RECESSED BY MILLING INTO THE EXISTING ASHPALT TO SET FLUSH WITH THE SURFACE OF THE EXISTING ASPHALT. FULL DEPTH CUTTING OF PAVEMENT SECTION OUTSIDE OF TRENCH IS NOT PERMITTED. MILLING DEPTH SHALL MATCH THICKNESS OF PLATE. THE GAP BETWEEN THE EDGE OF THE PLATE AND THE ADJACENT EXISTING ASPHALT PAVEMENT MUST BE FILLED WITH TEMPORARY ASPHALT.
3. TRENCH WIDTHS ARE BASED ON AN ANALYSIS PER THE 14TH EDITION OF STANDARD SPECIFICATIONS FOR HIGHWAY BRIDGES BY AASHTO. AN ASSUMED AXLE LOADING OF 12 TONS WITH A 30% IMPACT FACTOR WAS USED. THE AXLE LENGTH IS 6 FEET: THEREFORE THE NUMBER OF WHEELS CARRIED BY A PLATE DEPENDS ON THE ROADWAY WIDTH.
4. STEEL PLATE MUST BE ABLE TO WITHSTAND H–20 TRAFFIC LOADINGS WITHOUT ANY MOVEMENT.
5. PLATES SHALL BE FABRICATED FROM ASTM A36 STEEL (MIN).
6. PLATES SHALL BE SECURED FROM LATERAL MOVEMENT AND VERTICAL VIBRATION (ASSOCIATED NOISE) WHILE IN USE BY TEMPORARY ASPHALT (COLD MIX.)

PLATE SIZE						
LONGITUDINAL					TRANSVERSE	
(A)	(B)	THICKNESS	(W)	(L)	(A)	(B)
12”	18”	1”	4’	8’	58”	19”
12”	18”	1”	4’	10’	58”	31”
24”	18”	1”	5’	10’	70”	25”
36”	18”	1”	6’	10’	44”	38”
48”	18”	1”	7’	10’	52”	34”
60”	18”	1”	8’	10’	58”	31”
12”	18”	1–1/4”	4’	15’	88”	47”
24”	18”	1–1/4”	5’	12’	104”	20”
36”	18”	1–1/4”	6’	12’	66”	39”
36”	18”	1–1/4”	6’	16’	66”	63”
48”	18”	1–1/4”	7’	12’	76”	33”
48”	18”	1–1/4”	7’	16’	76”	58”
60”	18”	1–1/4”	8’	12’	86”	29”
60”	18”	1–1/4”	8’	15’	86”	47”
60”	18”	1–1/4”	8’	16’	86”	63”
60”	18”	1–1/4”	8’	20’	86”	77”
60”	18”	1–3/8”	8’	20’	102”	69”

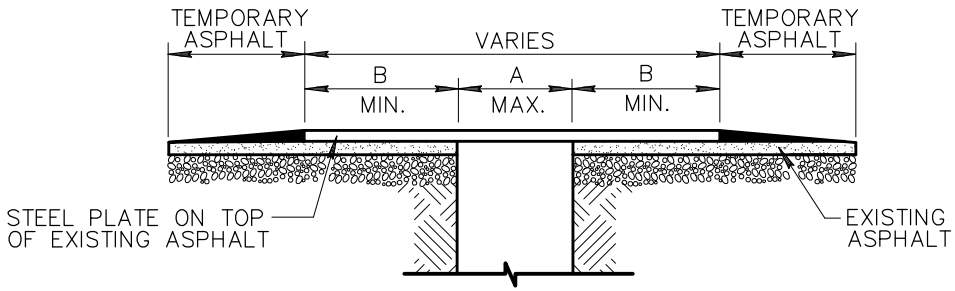

TYPE 1

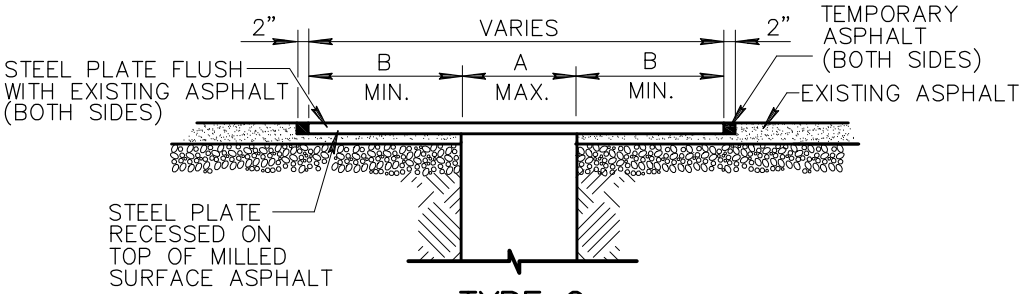

TYPE 2

DETAIL NO.				REVISED	DETAIL NO.
211	MARICOPA ASSOCIATION of GOVERNMENTS	STANDARD DETAIL ENGLISH	STANDARD TRENCH PLATING DETAIL	01–01–1998	211

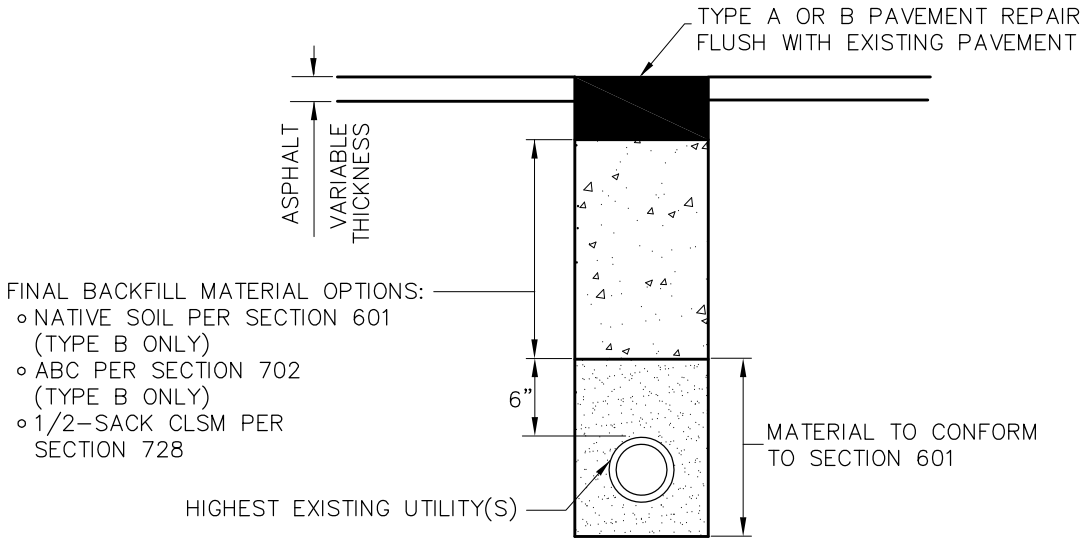

SECTION VIEW

TYPE A PAVEMENT REPAIR

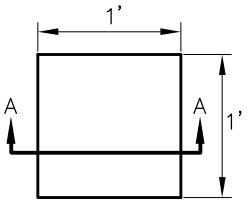

PLAN VIEW

NOTES:
1. DIMENSIONS ARE NOMINAL.
2. EDGES SHALL BE CUT TO A NEAT VERTICAL FACE.
3. PLACE CLSM BACKFILL IN ACCORDANCE WITH SECTION 604.
4. PLACE AGENCY-APPROVED ASPHALT CONCRETE IN MAXIMUM 2" LIFTS.

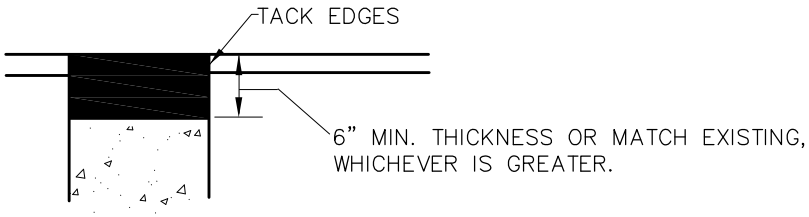

SECTION A-A

TYPE B PAVEMENT REPAIR

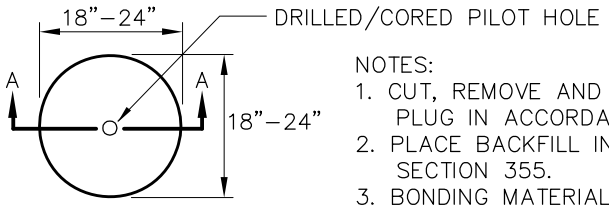

PLAN VIEW

NOTES:
1. CUT, REMOVE AND REPLACE PAVEMENT. PLUG IN ACCORDANCE WITH SECTION 355.
2. PLACE BACKFILL IN ACCORDANCE WITH SECTION 355.
3. BONDING MATERIAL SHALL BE AS SPECIFIED IN SECTION 708.

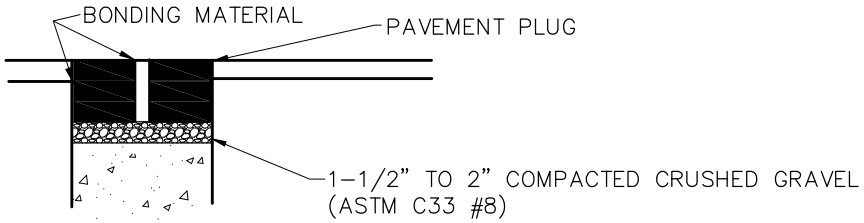

SECTION A-A

DETAIL NO.			REVISED	DETAIL NO.
212	MARICOPA ASSOCIATION of GOVERNMENTS STANDARD DETAIL ENGLISH	UTILITY POTHOLE REPAIR	01-01-2015	212

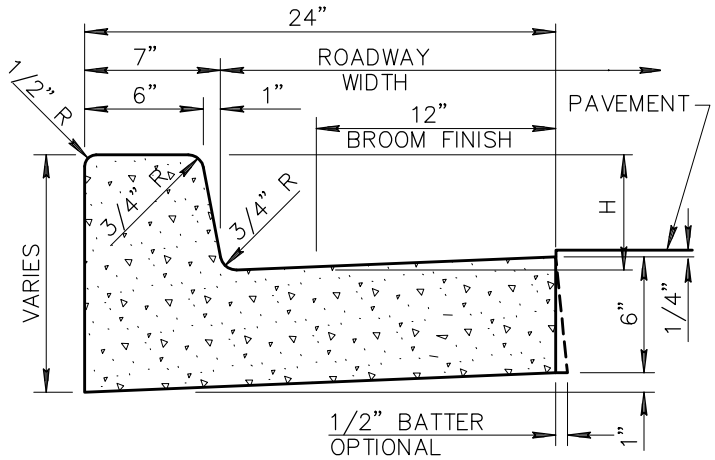

VERTICAL CURB AND GUTTER (TYPE A)

NOTES: (TYPE A)

1. ALL EXPOSED SURFACES TO BE TROWEL FINISHED EXCEPT AS SHOWN. SEE SECT. 340.
2. H=6" OR AS SPECIFIED ON PLANS.
3. CONTRACTION JOINT SPACING 10' MAXIMUM.
4. EXPANSION JOINTS AS PER SECT. 340.
5. CLASS 'B' CONCRETE PER 725.
6. WHEN THE ADJACENT PAVEMENT SECTION SLOPES AWAY FROM THE GUTTER, THE SLOPE OF THE GUTTER PAN SHALL MATCH PAVEMENT CROSS SLOPE.

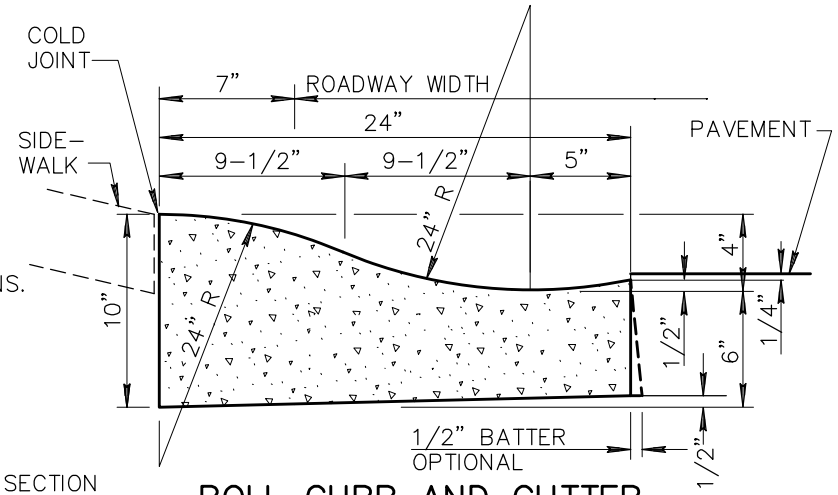

ROLL CURB AND GUTTER (TYPE C)

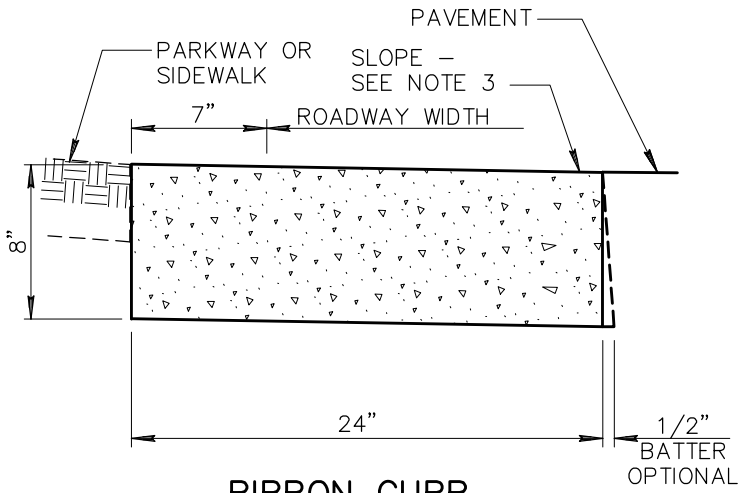

RIBBON CURB (TYPE B)

NOTES: (TYPE B)

1. CONSTRUCT CURB AND INSTALL 1/2" MASTIC EXPANSION JOINTS, A.S.T.M. D-1751. SECT. 340.
2. BROOM FINISH ALL SURFACES.
3. RIBBON CURB MAY SLOPE TOWARDS PAVEMENT OR PARKWAY AS INDICATED ON PLANS.
4. CONTRACTION JOINT SPACING 10' MAXIMUM.
5. CONCRETE SHALL BE CLASS 'B' PER SECT. 725 AND INSTALLED PER SECT. 505.

SPECIAL SECT. USE FOR HIGH SIDE CURB WITH SHEET DRAINAGE ACROSS STREET

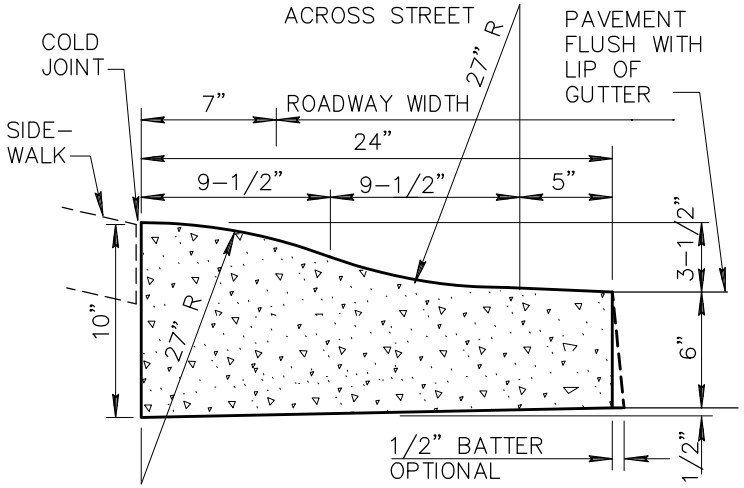

(TYPE D)

NOTES: (C & D)

1. ALL WORK AND MATERIALS SHALL CONFORM TO SECT. 304, 505 AND 725. BROOM FINISH TO EXPOSED SURFACE.
2. CONTRACTION JOINT SPACING 10' MAXIMUM.
3. EXPANSION JOINTS AS PER SECT. 340.
4. CLASS 'B' CONCRETE PER 725.

DETAIL NO.				REVISED	DETAIL NO.
220-1	MARICOPA ASSOCIATION of GOVERNMENTS	STANDARD DETAIL ENGLISH	CURB AND GUTTER TYPES A, B, C AND D	01-01-2007	220-1

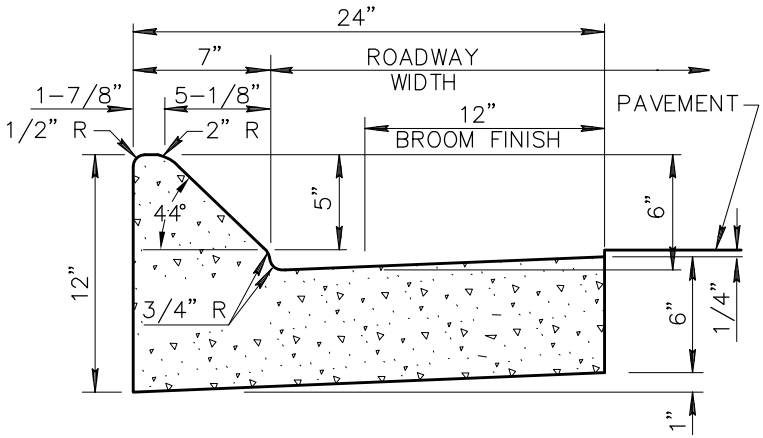

MOUNTABLE CURB AND GUTTER (TYPE E)

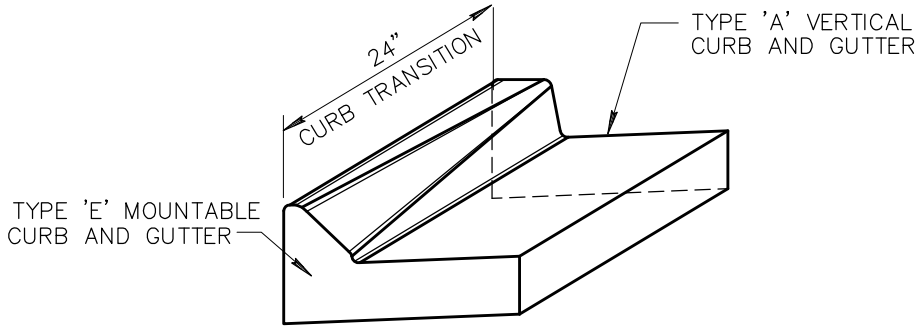

CURB TRANSITION TYPE 'E' TO TYPE 'A'

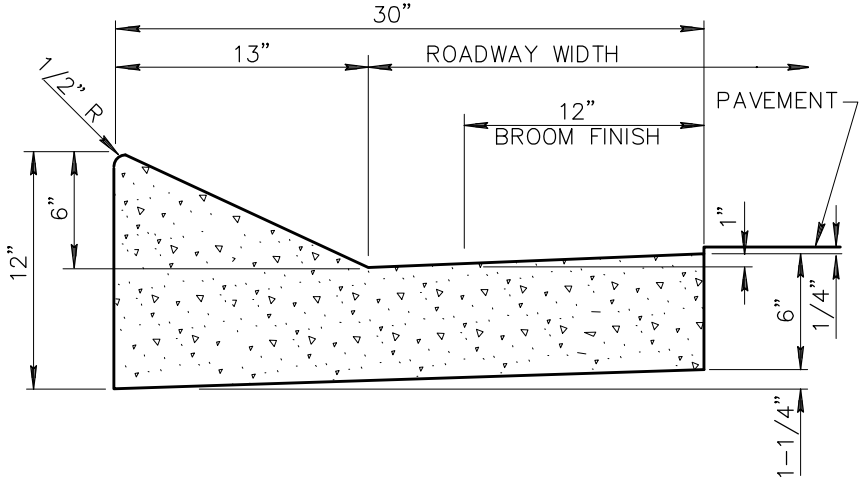

MOUNTABLE CURB AND GUTTER (TYPE F)

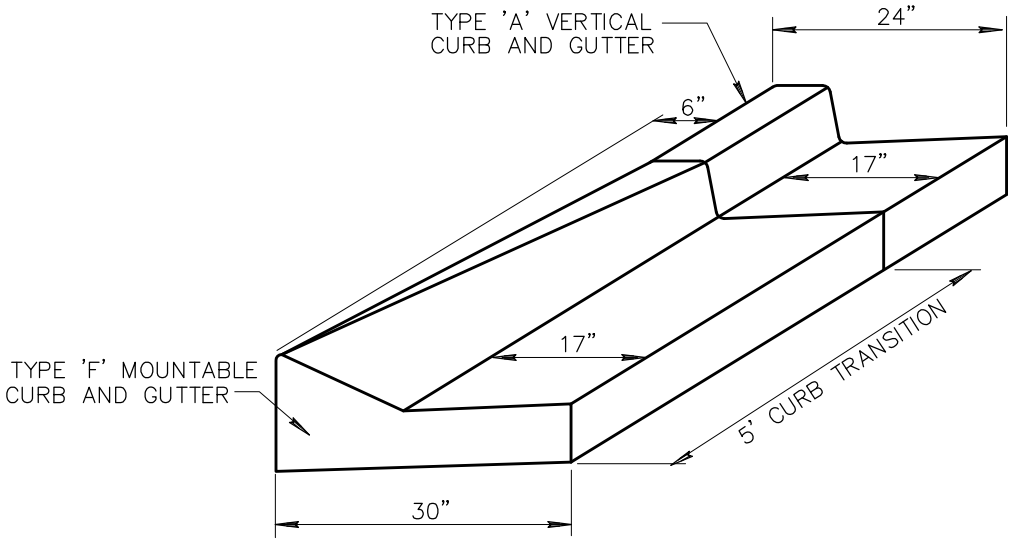

CURB TRANSITION TYPE 'F' TO TYPE 'A'

NOTES: (E & F)

1. ALL EXPOSED SURFACES TO BE TROWEL FINISHED EXCEPT AS SHOWN. SEE SECT. 340.
2. CONTRACTION JOINT SPACING 10' MAXIMUM.
3. EXPANSION JOINTS PER SECT. 340.
4. CLASS 'B' CONCRETE PER SECT. 725.
5. WHEN THE ADJACENT PAVEMENT SECTION SLOPES AWAY FROM THE GUTTER, THE SLOPE OF THE GUTTER PAN SHALL MATCH THE PAVEMENT CROSS SLOPE.

DETAIL NO.				REVISED	DETAIL NO.
220-2	MARICOPA ASSOCIATION of GOVERNMENTS	STANDARD DETAIL ENGLISH	CURB AND GUTTER TYPES E AND F	01-01-2007	220-2

CURB TRANSITION TYPE 'A' TO TYPE 'C'

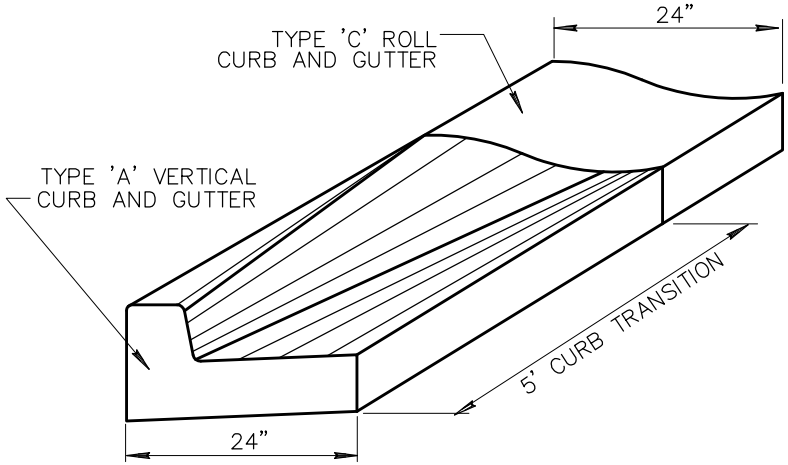

CURB AND GUTTER TRANSITION

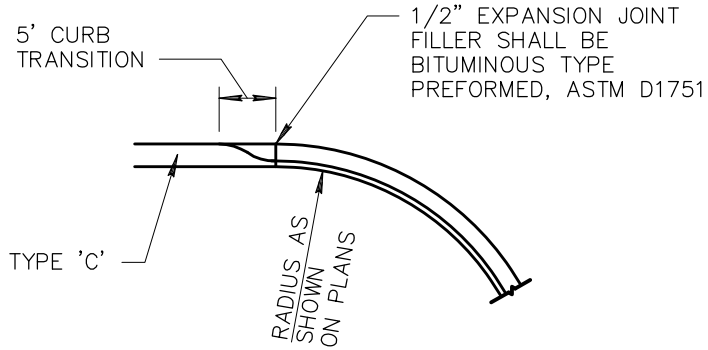

INTEGRAL ROLL CURB, GUTTER AND SIDEWALK

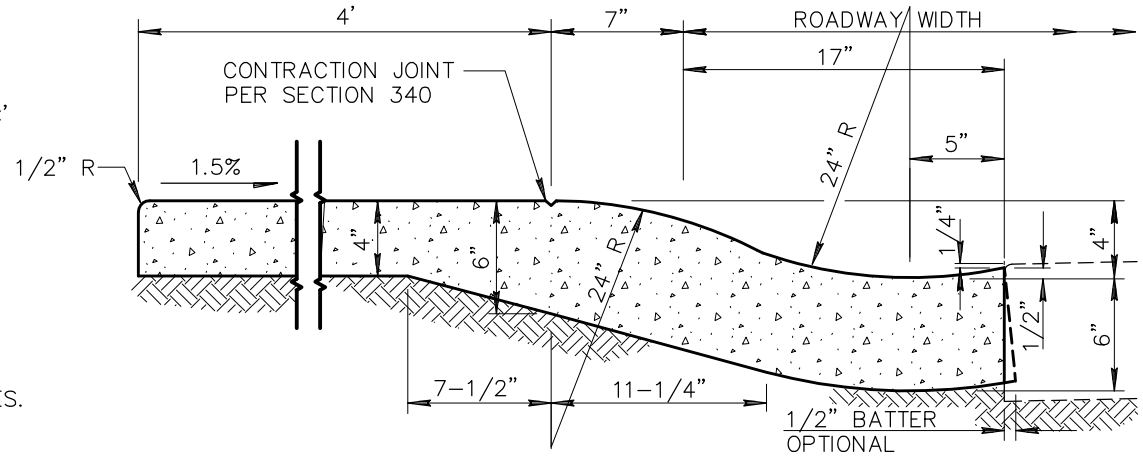

NOTES: (CURB AND GUTTER TRANSITIONS)

1. TRANSITIONS WILL BE PAID FOR AS THE PREDOMINANT TYPE OF CURB AND GUTTER BEING TRANSITIONED. WHEN TYPE 'A' CURB AND GUTTER ARE USED AT CURB RETURNS AND TYPE 'C' CURB AND GUTTER IS PREDOMINANTLY USED ELSEWHERE, THE TYPE 'A' TO TYPE 'C' TRANSITIONS SHALL BE MEASURED AND PAID FOR AS TYPE 'C' CURB AND GUTTER.
2. WHERE PROPOSED CONSTRUCTION IS TO BE CONNECTED TO EXISTING CURB AND GUTTER, THE TRANSITION SHALL BE INDICATED ON PLANS.
3. CLASS 'B' CONCRETE PER SECTION 725.
4. TRANSITION BETWEEN TYPICAL SECTIONS SHALL BE ACCOMPLISHED BY THE USE OF DIRECT STRAIGHT LINE TRANSITIONS OF THE FLOW LINE AND OTHER SURFACE FEATURES.

NOTES: (INTEGRAL ROLL CURB, GUTTER AND SIDEWALK)

1. CONCRETE TO BE MONOLITHIC POUR. EXPOSED SURFACE FINISH AS PER SIDEWALK AND GUTTER DETAIL.
2. CONTRACTION JOINT SPACING 5' MAXIMUM.
3. EXPANSION JOINTS PER SECTION 340.
4. CLASS 'B' CONCRETE PER SECTION 725.

DETAIL NO.		STANDARD DETAIL		REVISED	DETAIL NO.
221	MARICOPA ASSOCIATION of GOVERNMENTS	ENGLISH	**CURB AND GUTTER TRANSITION TYPE A TO TYPE C INTEGRAL ROLL CURB, GUTTER AND SIDEWALK**	01-01-2014	221

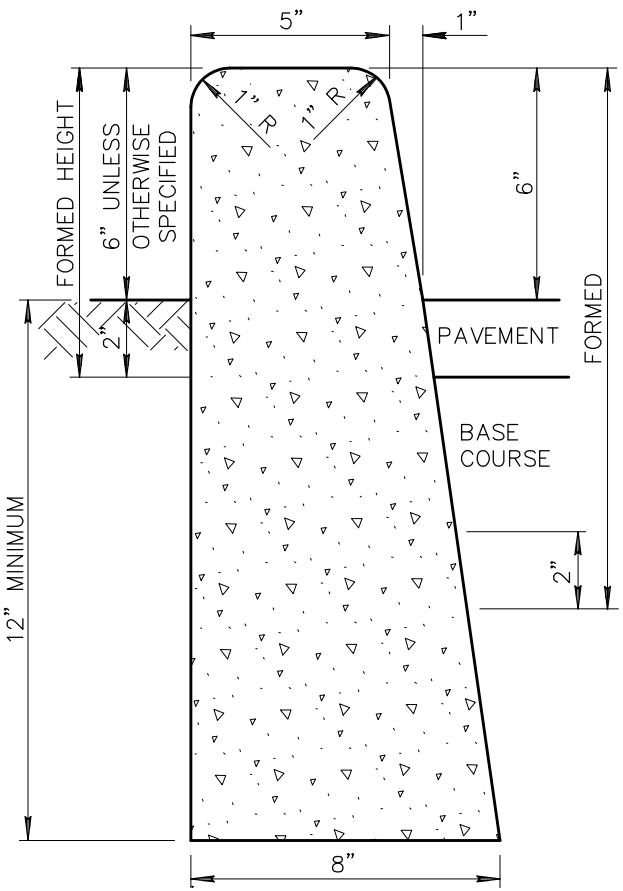

TYPE 'A'

NOTES:

1. ALL VERTICAL SURFACES TO BE FORMED.
2. VERTICAL SURFACES DOWN FROM 2" BELOW UNDISTURBED SOIL MAY BE PLACED AGAINST NEAT CUT IF APPROVED BY THE ENGINEER AND CONCRETE WILL NOT EXTEND MORE THAN 1" BEYOND THEORETICAL FACE.
3. ALL EXPOSED SURFACES TO BE STRIPPED GREEN AND TROWEL FINISHED.
4. CONCRETE CURBS CONFORM TO SECT. 340.
5. MAXIMUM SPACING OF CONTRACTION JOINTS IS 10'
6. CONCRETE TO BE CLASS 'B' PER SECT. 725.
7. WHEN PAVEMENT AND BASE COURSE EQUALS OR EXCEEDS 10" IN DEPTH, THE ENTIRE ROADWAY SIDE OF THE CURB SHALL BE FORMED. THE TOTAL CURB HEIGHT REMAINS 18" UNLESS NOTED OTHERWISE.

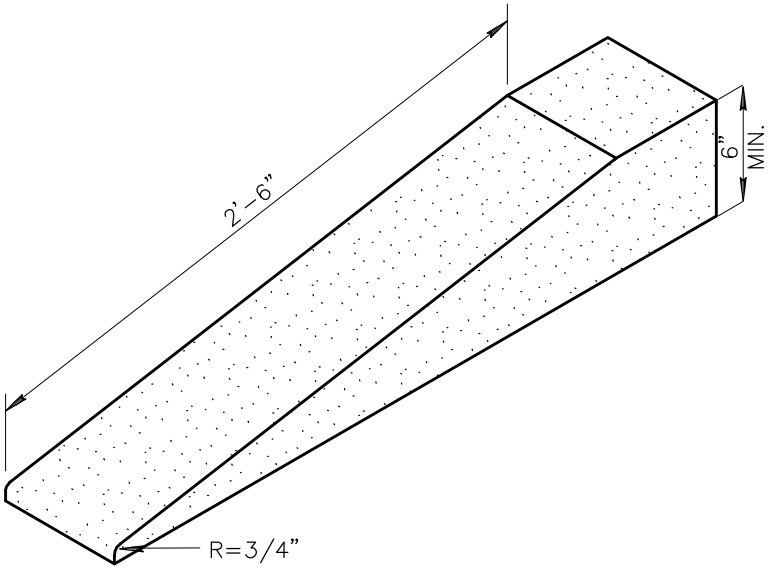

TYPICAL CURB TERMINATION

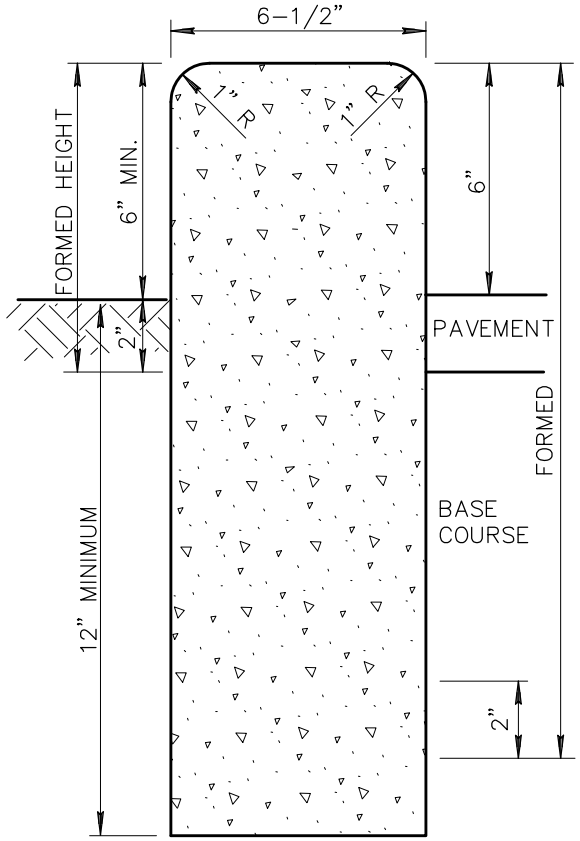

TYPE 'B'

DETAIL NO.				REVISED	DETAIL NO.
222	MARICOPA ASSOCIATION of GOVERNMENTS	STANDARD DETAIL ENGLISH	SINGLE CURB – TYPES A, B AND TERMINATION	01-01-2008	222

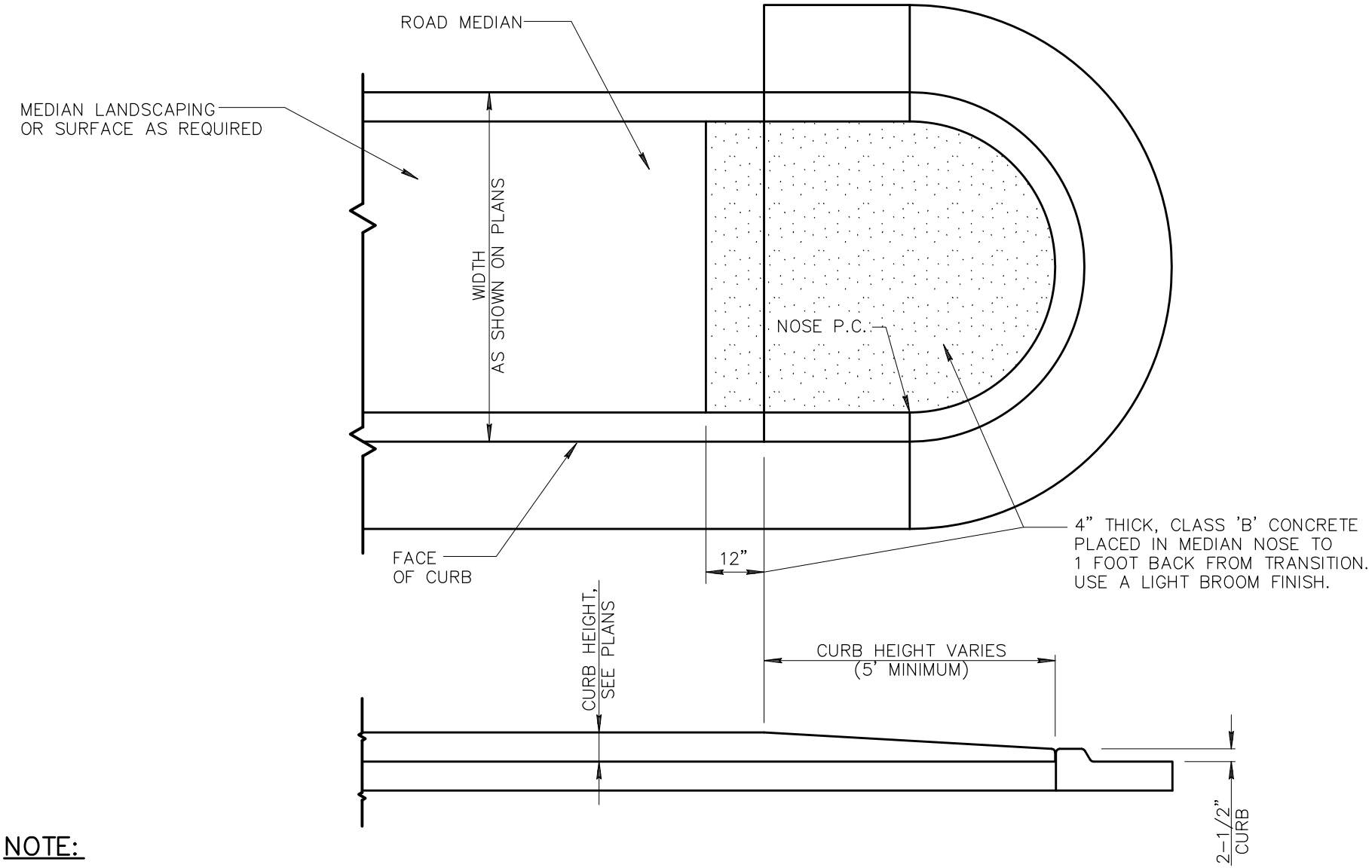

NOTE:

LENGTH OF TRANSITION SHALL BE EQUAL TO RADIUS OF MEDIAN NOSE, (5' MINIMUM). FOR LOCATION SEE PLANS.

DETAIL NO.				REVISED	DETAIL NO.
223	MARICOPA ASSOCIATION of GOVERNMENTS	STANDARD DETAIL ENGLISH	MEDIAN NOSE TRANSITION	01-01-1998	223

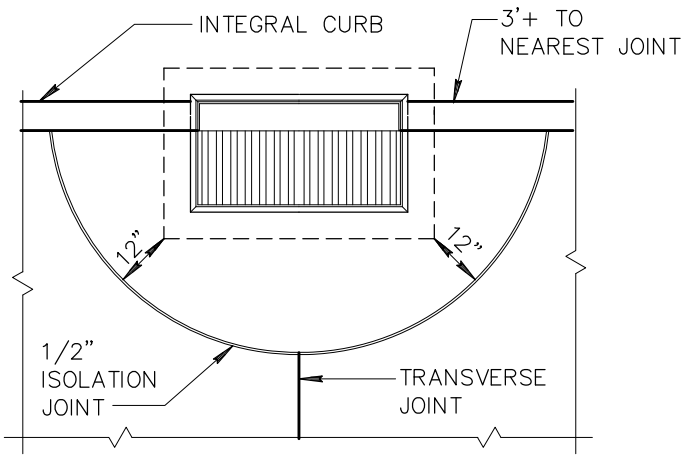

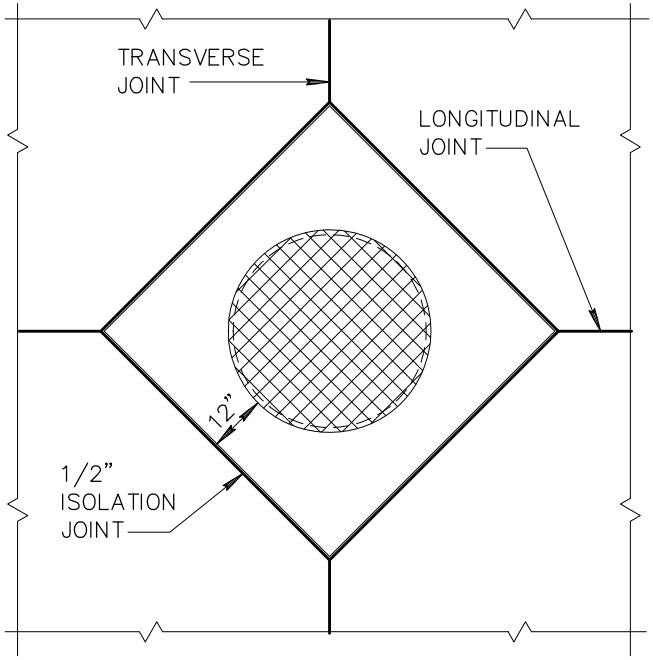

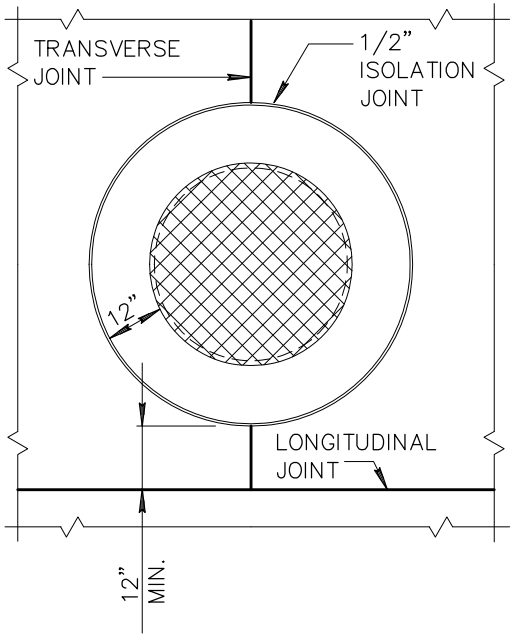

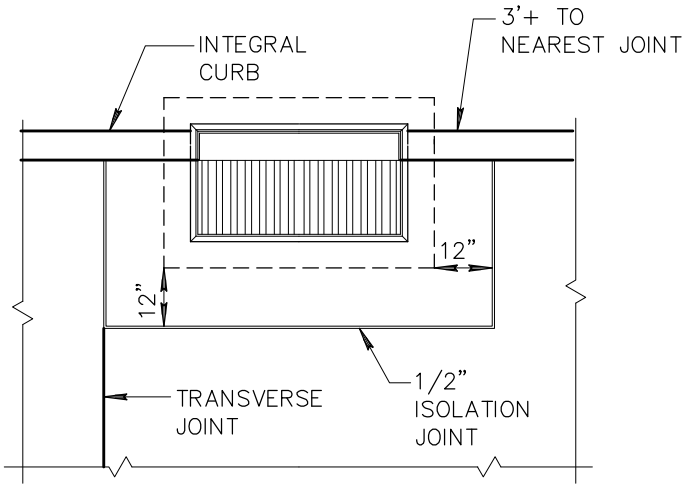

DRAINAGE INLET

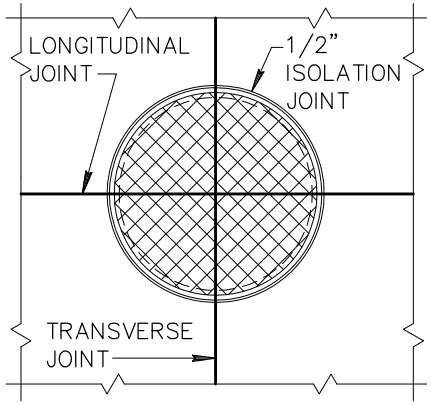

MANHOLE COVERS

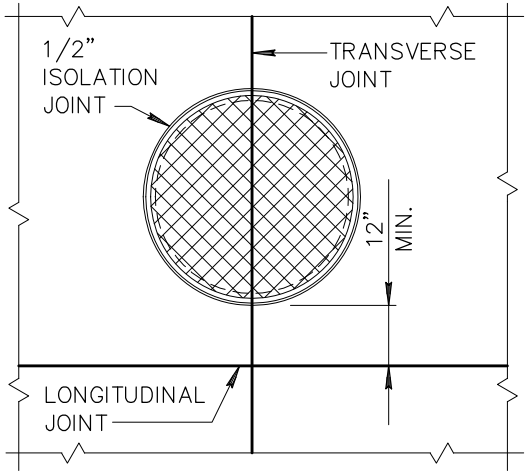

MANHOLE COVERS

DETAIL NO.				REVISED	DETAIL NO.
224	MARICOPA ASSOCIATION of GOVERNMENTS	STANDARD DETAIL ENGLISH	JOINT FOR DRAINAGE INLETS AND MANHOLE COVERS	01-01-1998	224

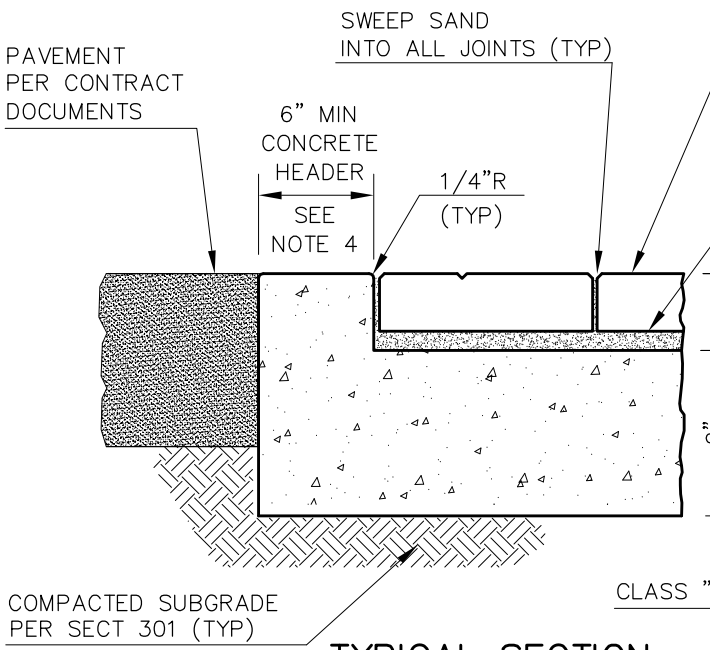

TYPICAL SECTION
(AGAINST PAVEMENT)

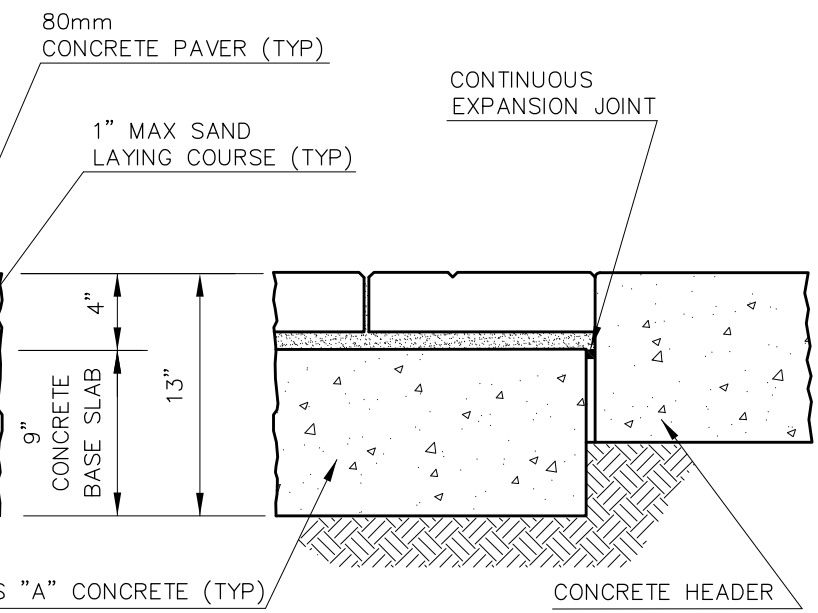

TYPICAL AT END OR ALTERNATE SECTION
(AGAINST CONCRETE)

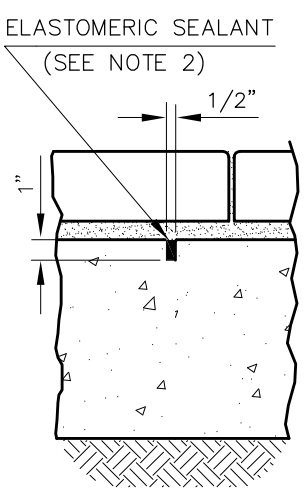

CONTRACTION JOINT
DETAIL

NOTES:

1. EXPANSION JOINTS PER SECT 342, EVERY 50'.
2. CONTRACTION JOINTS PER SECT 342, EVERY 10'.
3. MATERIALS AND CONSTRUCTION PER SECT 342.
4. HEADERS SHALL BE 12" AT CROSSWALKS.
5. 60mm PAVERS MAY BE ACCEPTED WITH AGENCY APPROVAL IN NON TRAFFIC AREAS ONLY.

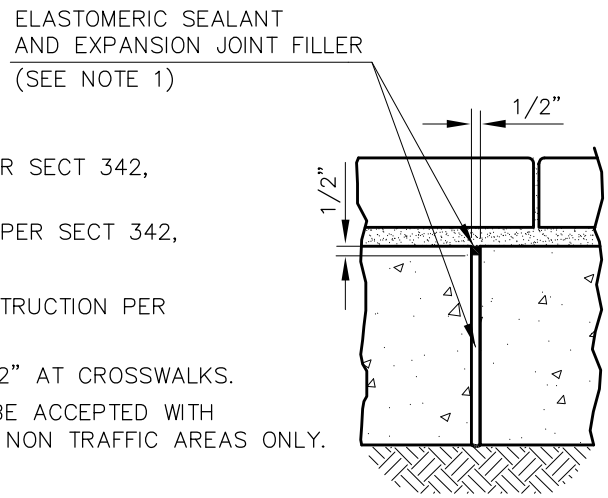

EXPANSION JOINT
DETAIL

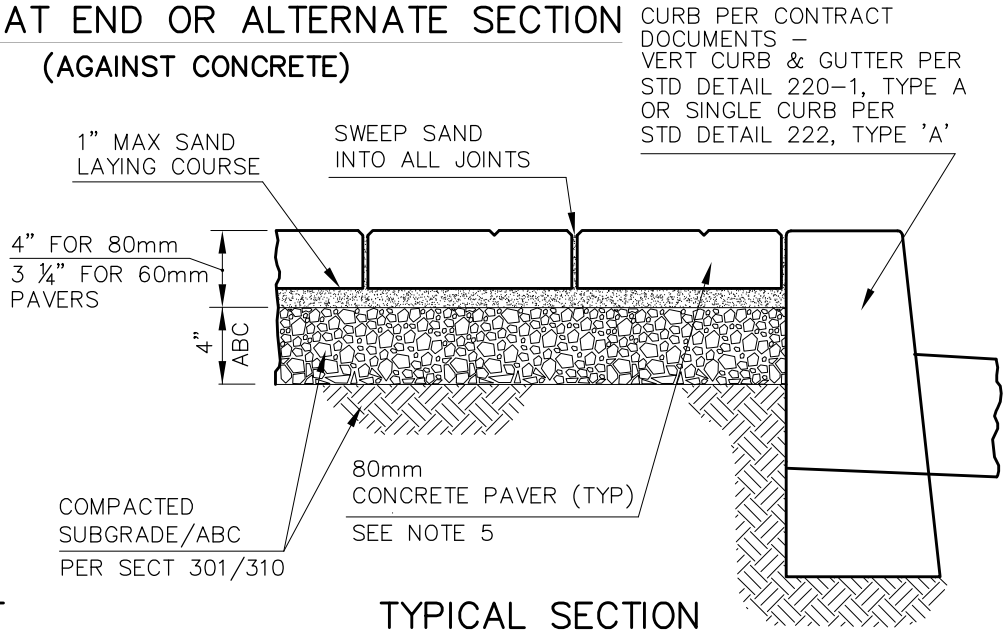

TYPICAL SECTION
(RAISED MEDIAN)

DETAIL NO.		STANDARD DETAIL		REVISED	DETAIL NO.
225	MARICOPA ASSOCIATION of GOVERNMENTS	ENGLISH	INTERLOCKING CONCRETE PAVERS	01–01–2016	225

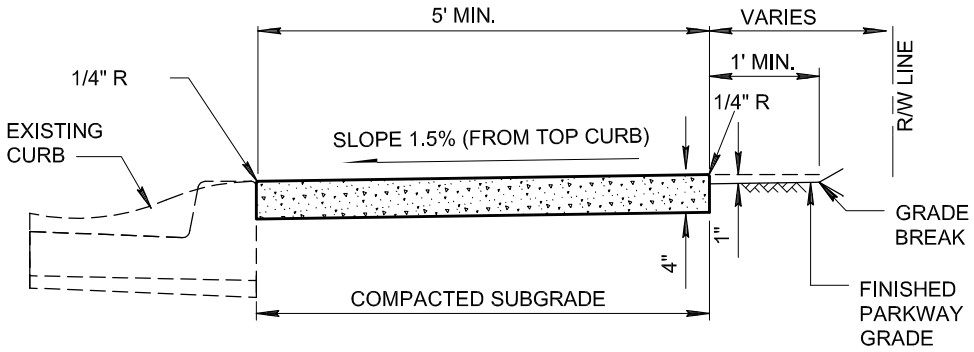

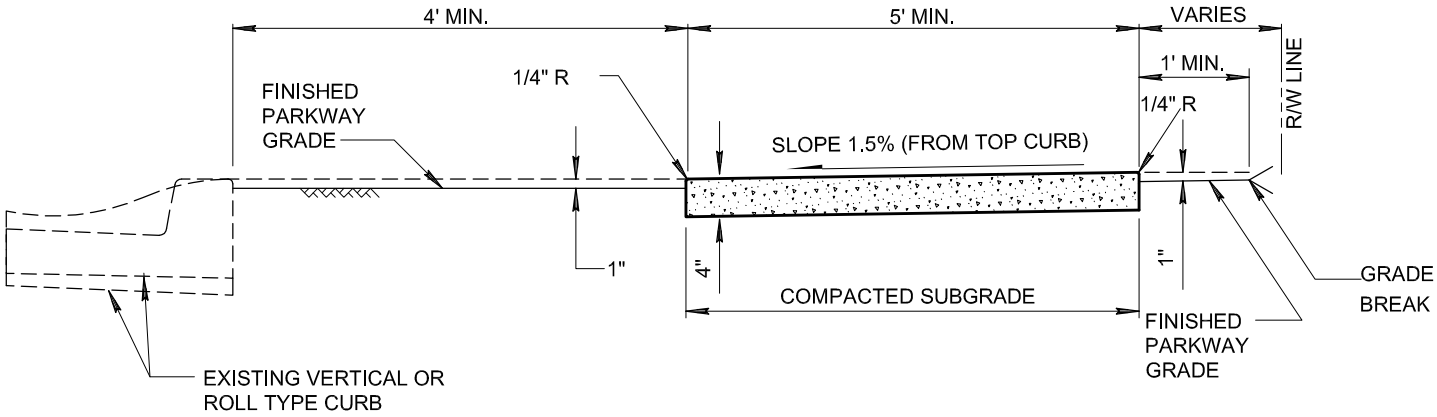

NOTES:

1. SIDEWALK CONSTRUCTION SHALL CONFORM TO SECTION 340.
2. EXPANSION JOINTS SHALL BE 1/2" BITUMINOUS TYPE PREFORMED EXPANSION JOINT FILLER, PER SECTION 729.
3. LARGE AGGREGATE, IN CONTRACTION JOINT SHALL BE SEPARATED TO A DEPTH OF 1", FINISH DEPTH SHALL BE A MINIMUM OF 3/4".
4. EXPANSION JOINTS SHALL CONFORM TO SECTION 340, BE INSTALLED PRIOR TO CONCRETE PLACEMENT, AND AT A MAXIMUM SPACING OF 50'.
5. CONCRETE SHALL BE CLASS 'B' PER SECTION 725.
6. WHEN SIDEWALK AND ADJACENT CURB ARE CONSTRUCTED MONOLITHICALLY, ALL EXPANSION AND CONTRACTION JOINTS SHALL EXTEND ACROSS THE CURB.

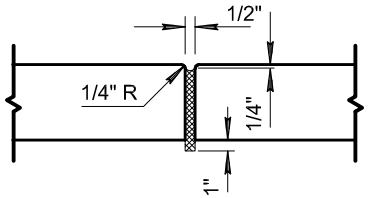

EXPANSION JOINT

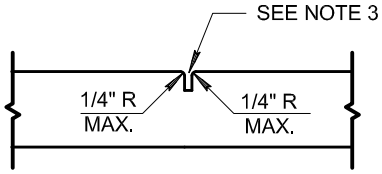

CONTRACTION JOINT

DETAIL NO.		STANDARD DETAIL		REVISED	DETAIL NO.
230	MARICOPA ASSOCIATION of GOVERNMENTS	ENGLISH	SIDEWALKS	01-01-2014	230

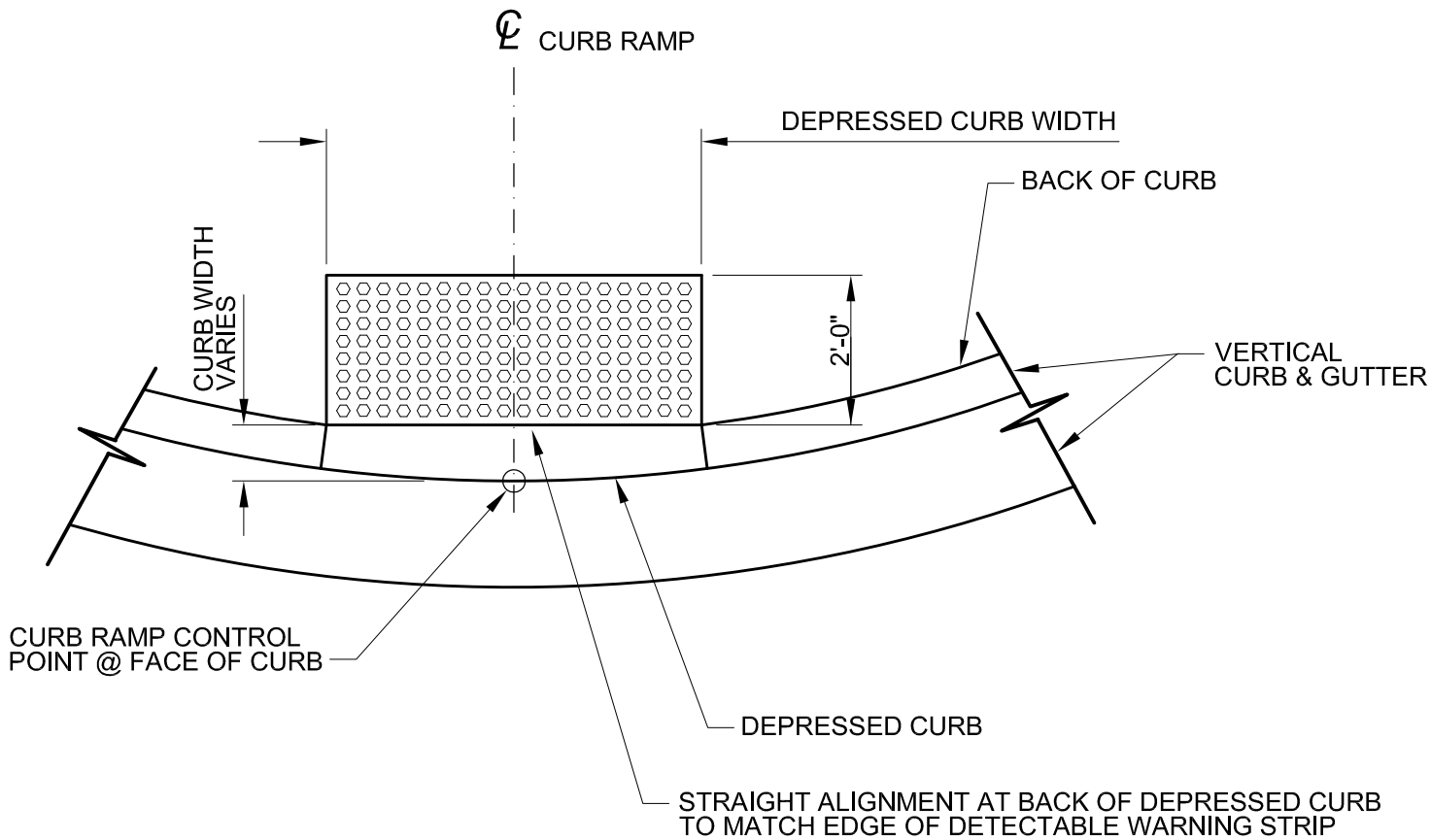

PLAN VIEW

DETAIL NO.				REVISED	DETAIL NO.
234	MARICOPA ASSOCIATION of GOVERNMENTS	STANDARD DETAIL ENGLISH	CURB MODIFICATION AT DETECTABLE WARNING	01-01-2012	234

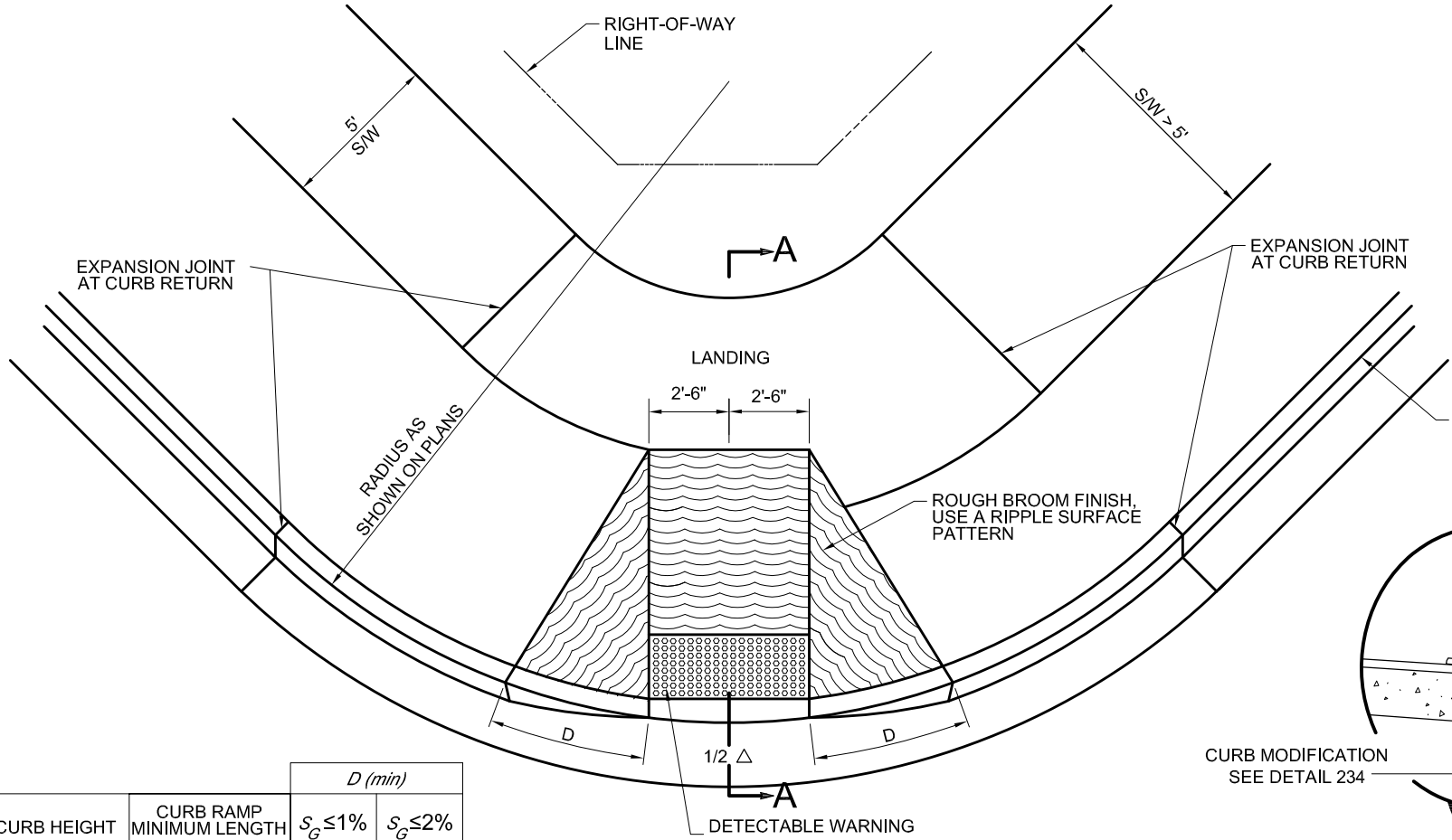

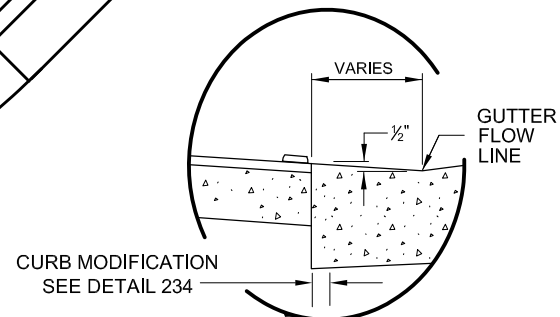

CURB HEIGHT	CURB RAMP MINIMUM LENGTH	D (min) $S_G \leq 1\%$	D (min) $S_G \leq 2\%$
4"	5'	*4.0'*	*4.5'*
6"	7½'	*6.0'*	*6.5'*
7"	9'	*6.5'*	*7.5'*

S_G =MAXIMUM GUTTER SLOPE WITHIN RAMP LIMITS

NOTES:

1. CLASS 'B' CONCRETE PER SECTION 725.
2. EXPANSION JOINTS SHALL CONFORM TO SECTION 340.
3. SIDEWALK SURFACE TO MATCH 1½% SLOPE FROM TOP OF CURB
4. DETECTABLE WARNING IS TO COMPLY WITH THE JURISDICTIONAL AGENCY'S REQUIREMENTS.
5. DETAIL IS ADA COMPLIANT FOR $S_G \leq 2\%$.

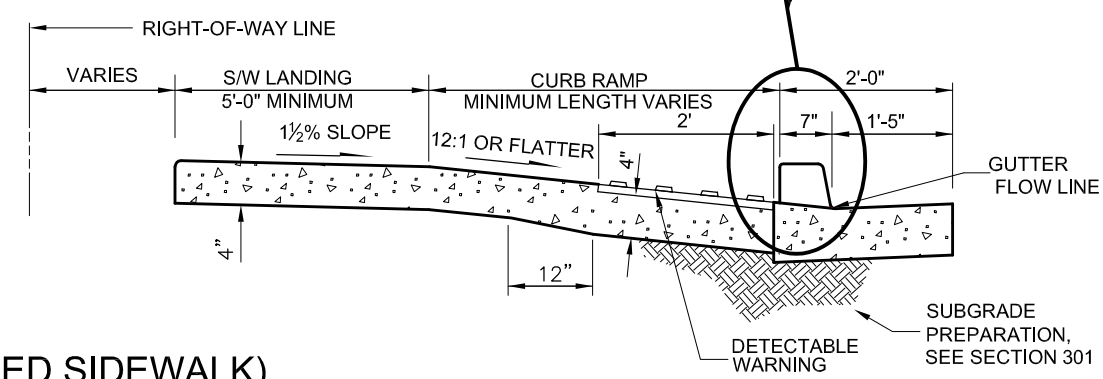

TYPE 'A' (DETACHED SIDEWALK)

SECTION A-A

DETAIL NO.				REVISED	DETAIL NO.
235-1	MARICOPA ASSOCIATION of GOVERNMENTS	STANDARD DETAIL ENGLISH	CURB RAMPS	01–01–2012	235-1

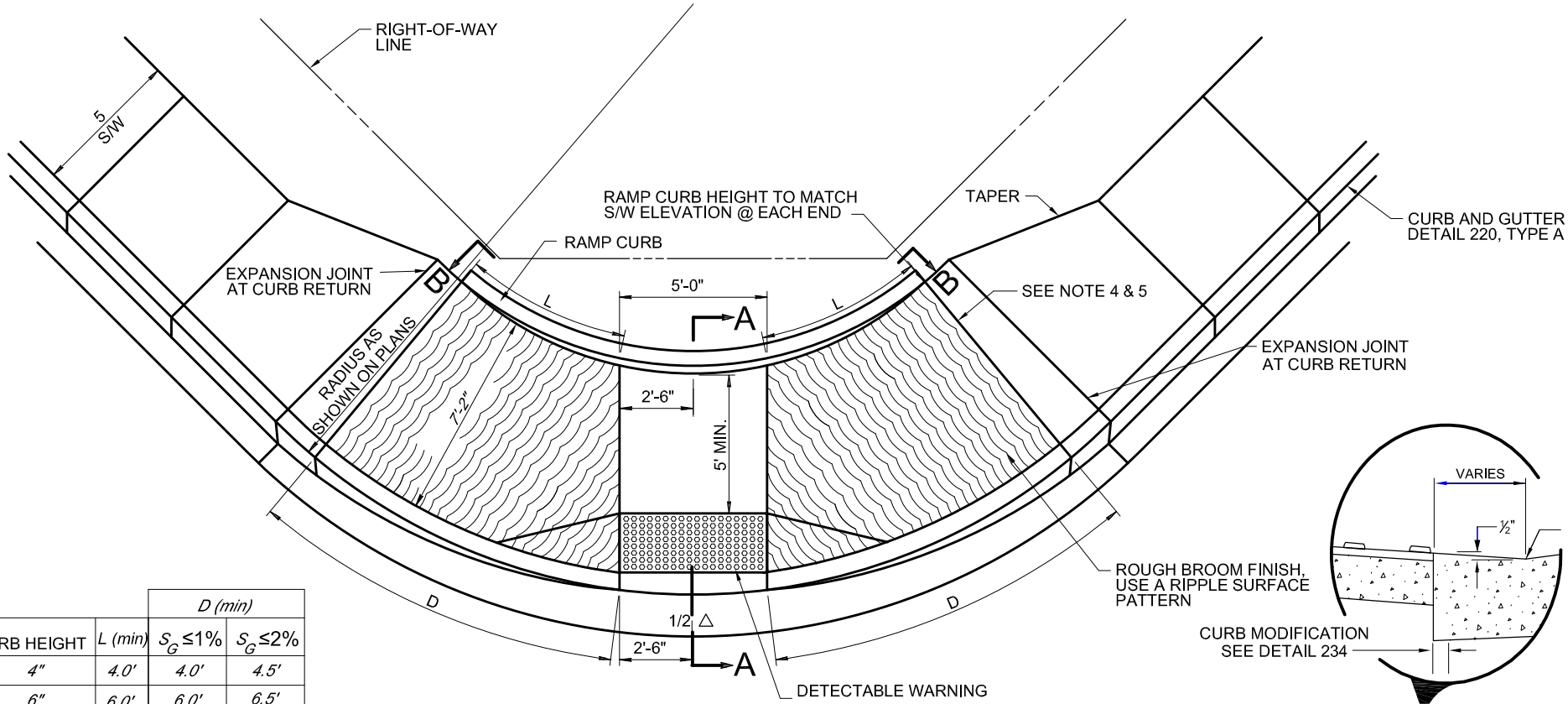

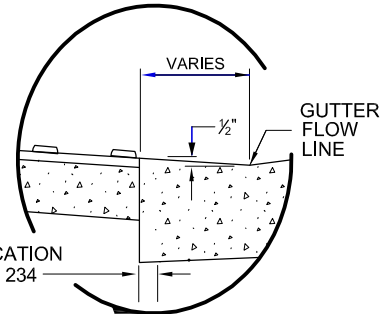

CURB HEIGHT	L (min)	D (min) $S_G \leq 1\%$	D (min) $S_G \leq 2\%$
4"	4.0'	4.0'	4.5'
6"	6.0'	6.0'	6.5'
7"	7.0'	6.5'	7.5'

S_G=MAXIMUM GUTTER SLOPE WITHIN RAMP LIMITS

NOTES:

1. CLASS 'B' CONCRETE PER SECTION 725.
2. EXPANSION JOINTS SHALL CONFORM TO SECTION 340.
3. DETECTABLE WARNING IS TO COMPLY WITH THE JURISDICTIONAL AGENCY'S REQUIREMENTS.
4. INCREASE 'L' OR 'D' AS NEEDED TO HAVE THE TOP OF RAMP FORM A RADIAL LINE.
5. WHEN TOP OF RAMP IS LESS THAN 4' FROM CURB RETURN, EXTEND RAMP TO THE CURB RETURN.
6. DETAIL IS ADA COMPLIANT FOR $S_G \leq 2\%$.

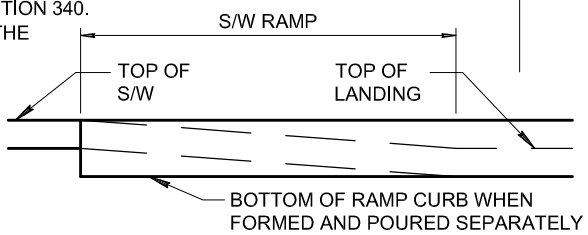

SECTION B-B

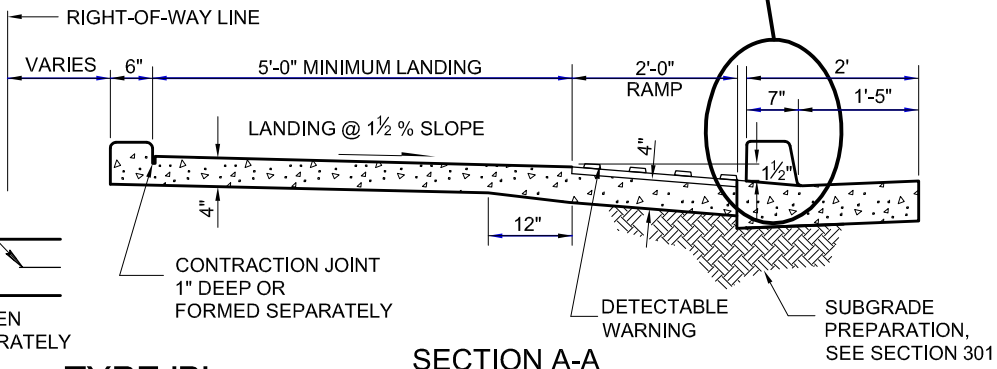

SECTION A-A

TYPE 'B'

DETAIL NO.		STANDARD DETAIL		REVISED	DETAIL NO.
235-2	MARICOPA ASSOCIATION of GOVERNMENTS	ENGLISH	CURB RAMPS	01–01–2012	235-2

NOTES:

1. CLASS 'B' CONCRETE CONSTRUCTION PER SECTION 725.
2. DETECTABLE WARNING IS TO COMPLY WITH THE JURISDICTIONAL AGENCY'S REQUIREMENT.
3. RAMP LONGITUDINAL SLOPE SHALL BE 12:1 OR FLATTER.
4. RAMP CROSS SLOPE SHALL BE 1½%.
5. DETAIL IS ADA COMPLIANT FOR CURB RADII ≥ 20' AND GUTTER SLOPE ≤ 2.0%.

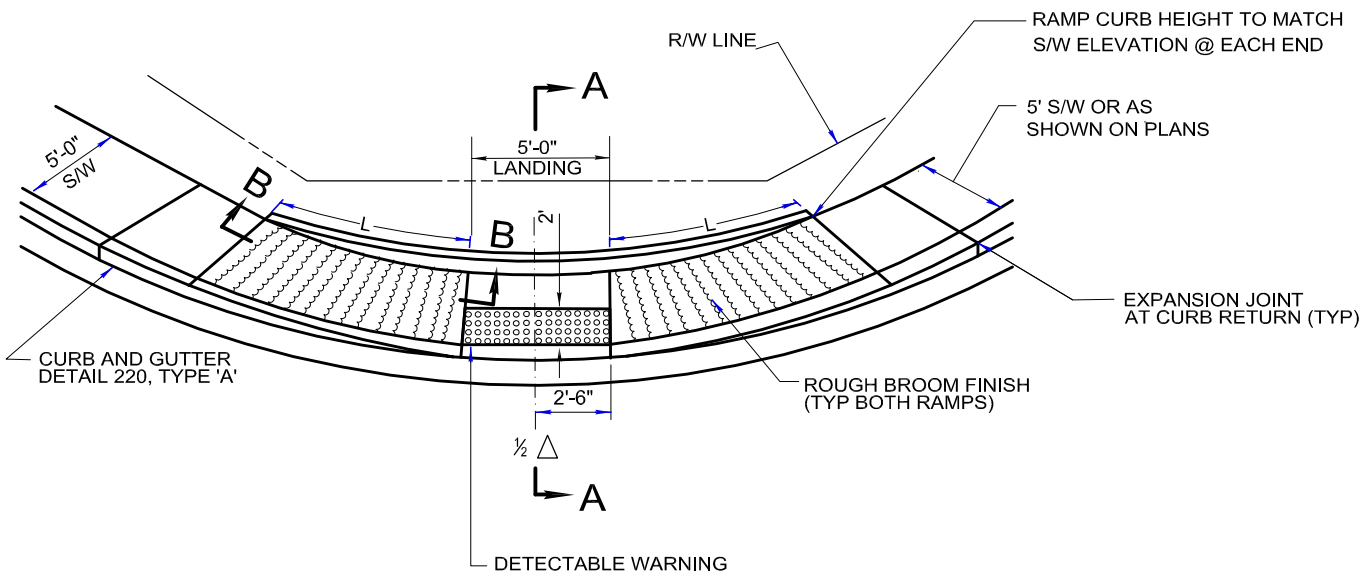

CURB HEIGHT	L (min) $S_G \leq 1\%$	L (min) $S_G \leq 2\%$
4"	*5.0'*	*6.0'*
6"	*7.0'*	*8.5'*

S_G =MAXIMUM GUTTER SLOPE WITHIN RAMP LIMITS

DETAIL

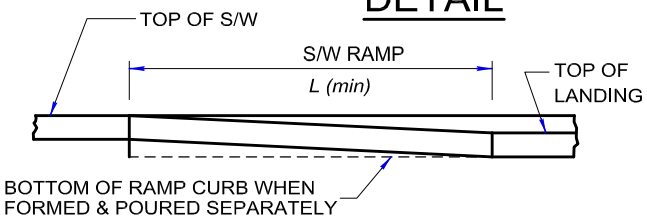

SECTION B-B

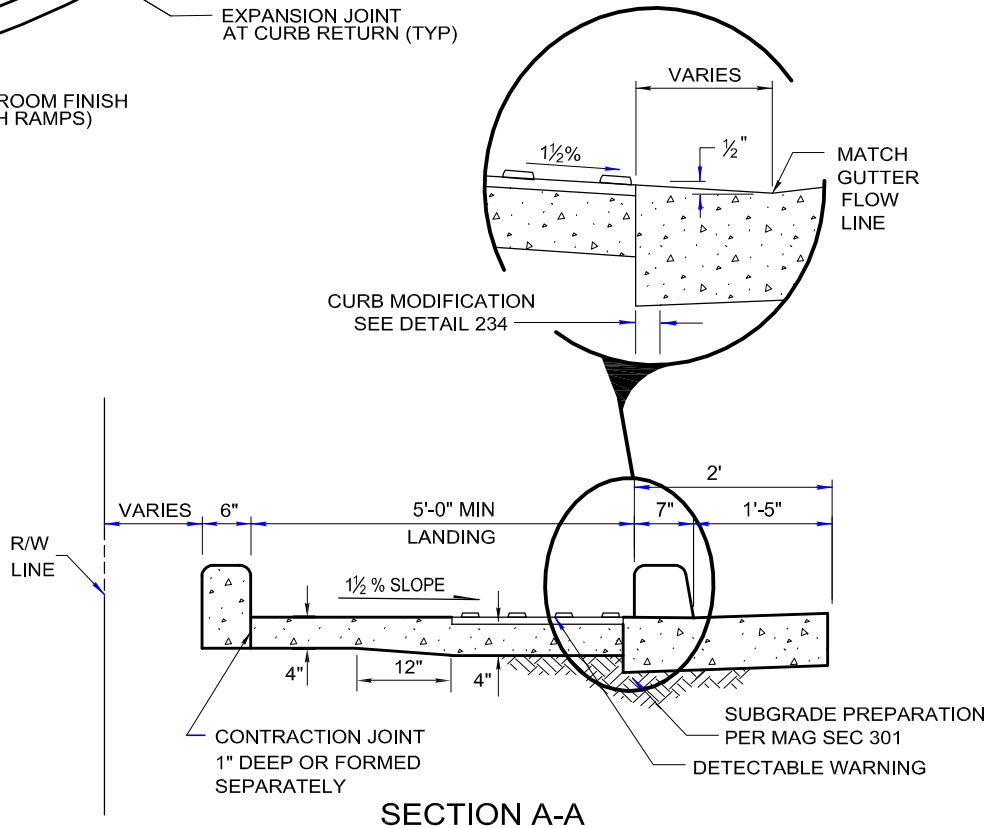

SECTION A-A

TYPE 'C'

DETAIL NO.		STANDARD DETAIL		REVISED	DETAIL NO.
235-3	MARICOPA ASSOCIATION of GOVERNMENTS	ENGLISH	CURB RAMPS	01-01-2012	235-3

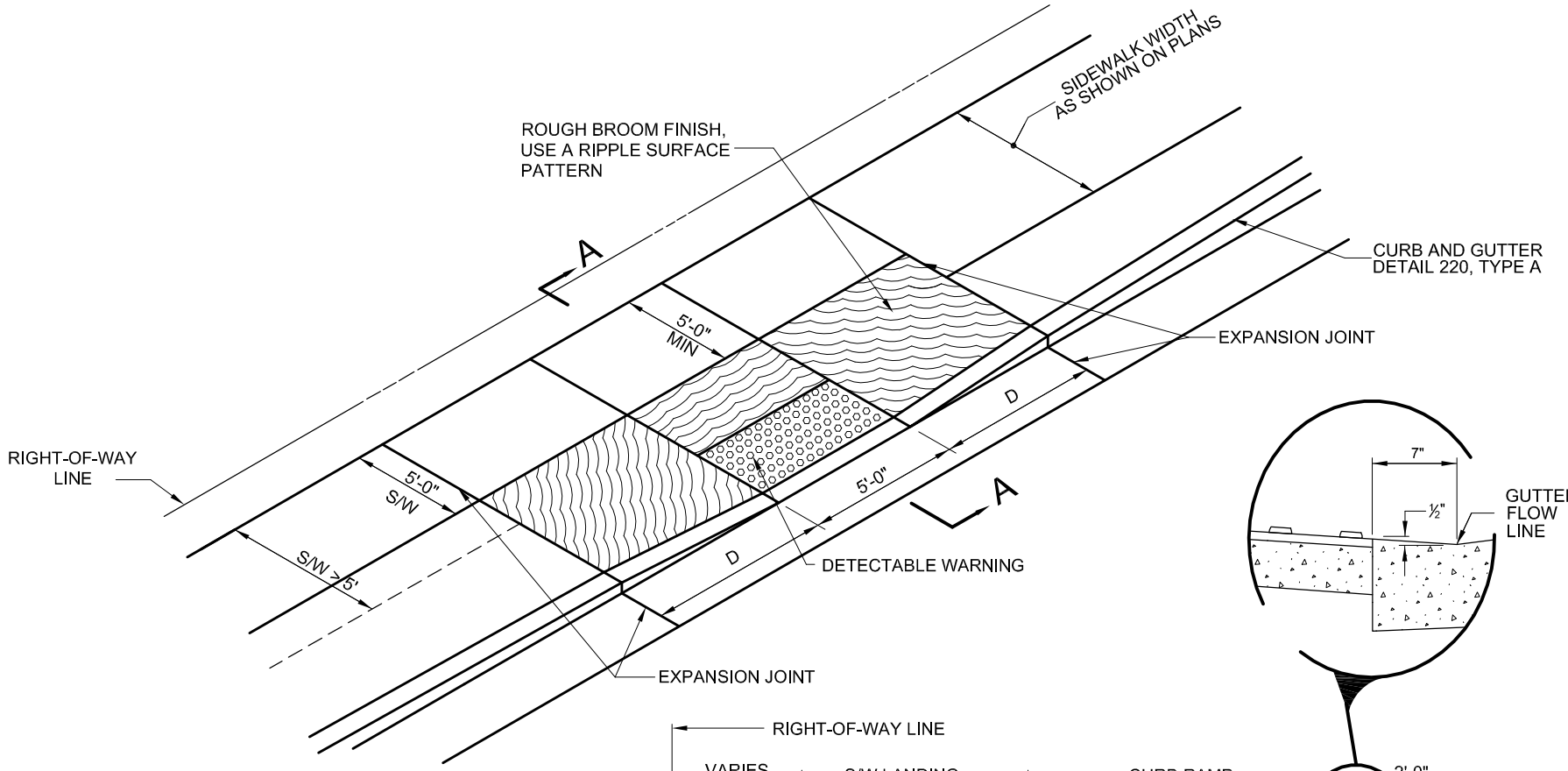

CURB HEIGHT	CURB RAMP MINIMUM LENGTH	D (min) $S_G \leq 1\%$	D (min) $S_G \leq 2\%$
4"	5'	4.0'	4.5'
6"	7 ½'	6.0'	6.5'
7"	9'	6.5'	7.5'

S_G =MAXIMUM GUTTER SLOPE WITHIN RAMP LIMITS

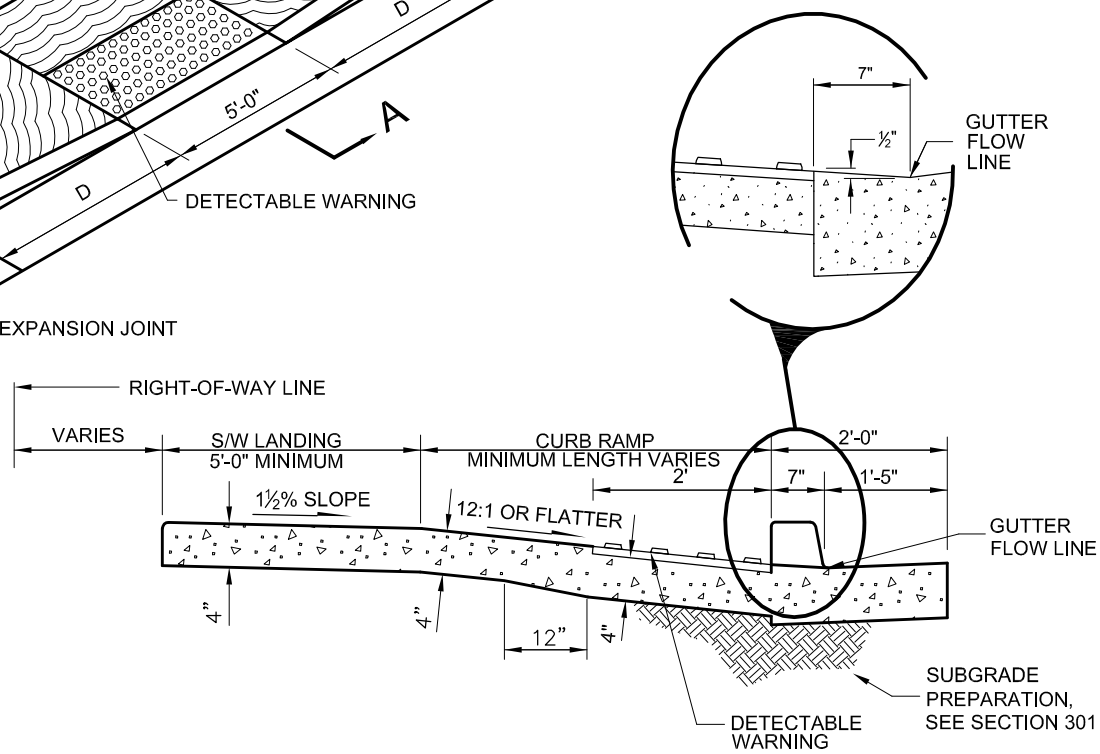

SECTION A-A

NOTES:

1. CLASS 'B' CONCRETE PER SECTION 725.
2. EXPANSION JOINTS SHALL CONFORM TO SECTION 340.
3. SIDEWALK SURFACE TO MATCH 1 ½ % SLOPE FROM TOP OF CURB.
4. DETECTABLE WARNING IS TO COMPLY WITH THE JURISDICTIONAL AGENCY'S REQUIREMENTS.
5. DETAIL IS ADA COMPLIANT FOR $S_G \leq 2\%$.

TYPE 'D' DETACHED SIDEWALK

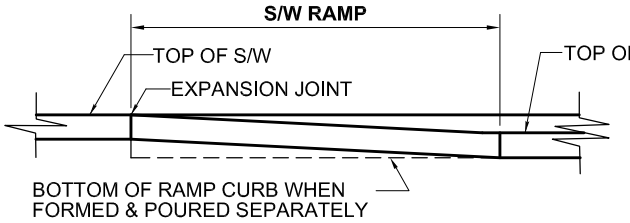

SECTION B-B

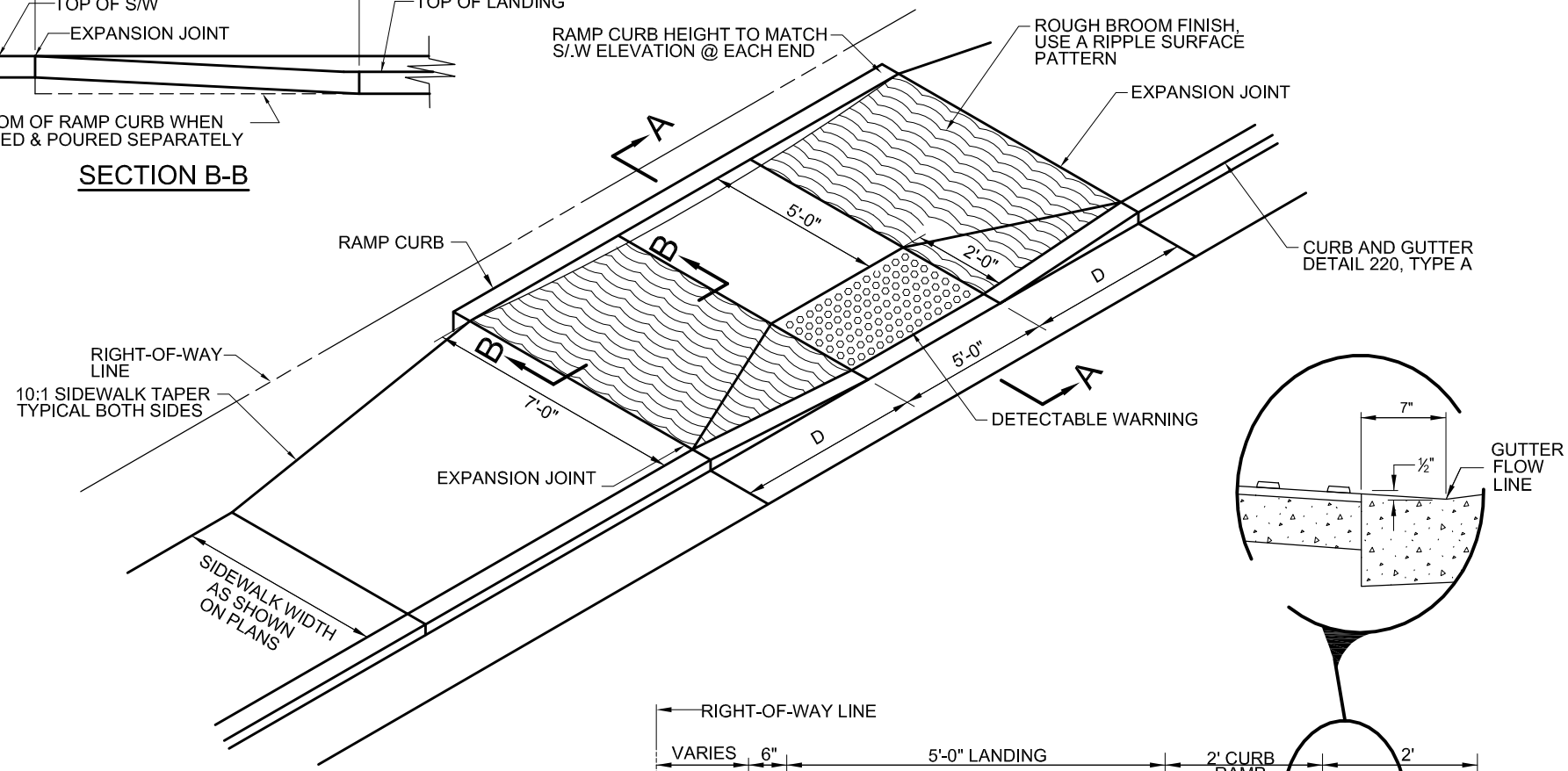

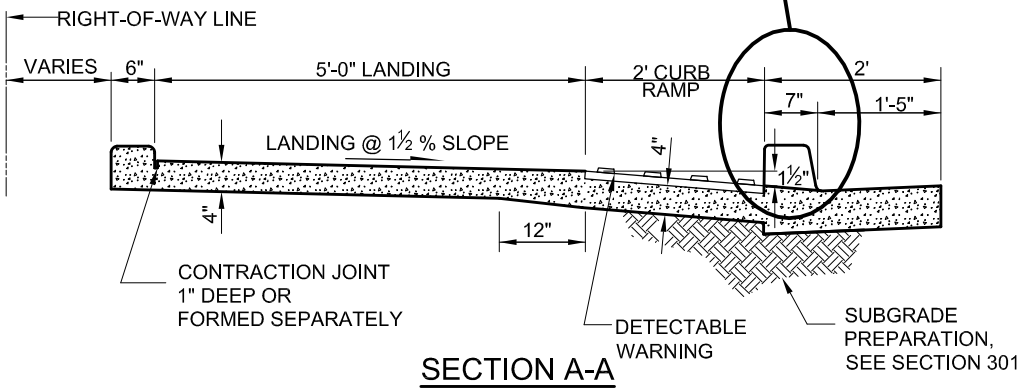

SECTION A-A

CURB HEIGHT	D (min)	
	$S_G \leq 1\%$	$S_G \leq 2\%$
4"	*4.0'*	*4.5'*
6"	*6.0'*	*6.5'*
7"	*6.5'*	*7.5'*

S_G=MAXIMUM GUTTER SLOPE WITHIN RAMP LIMITS

NOTES:

1. CLASS 'B' CONCRETE PER SECTION 725.
2. EXPANSION JOINTS SHALL CONFORM TO SECTION 340.
3. DETECTABLE WARNING IS TO COMPLY WITH THE JURISDICTIONAL AGENCY'S REQUIREMENTS.
4. DETAIL IS ADA COMPLIANT FOR $S_G \leq 2\%$.

TYPE 'E'

DETAIL NO.		STANDARD DETAIL		REVISED	DETAIL NO.
235-5	MARICOPA ASSOCIATION of GOVERNMENTS	ENGLISH	CURB RAMPS	01–01–2011	235-5

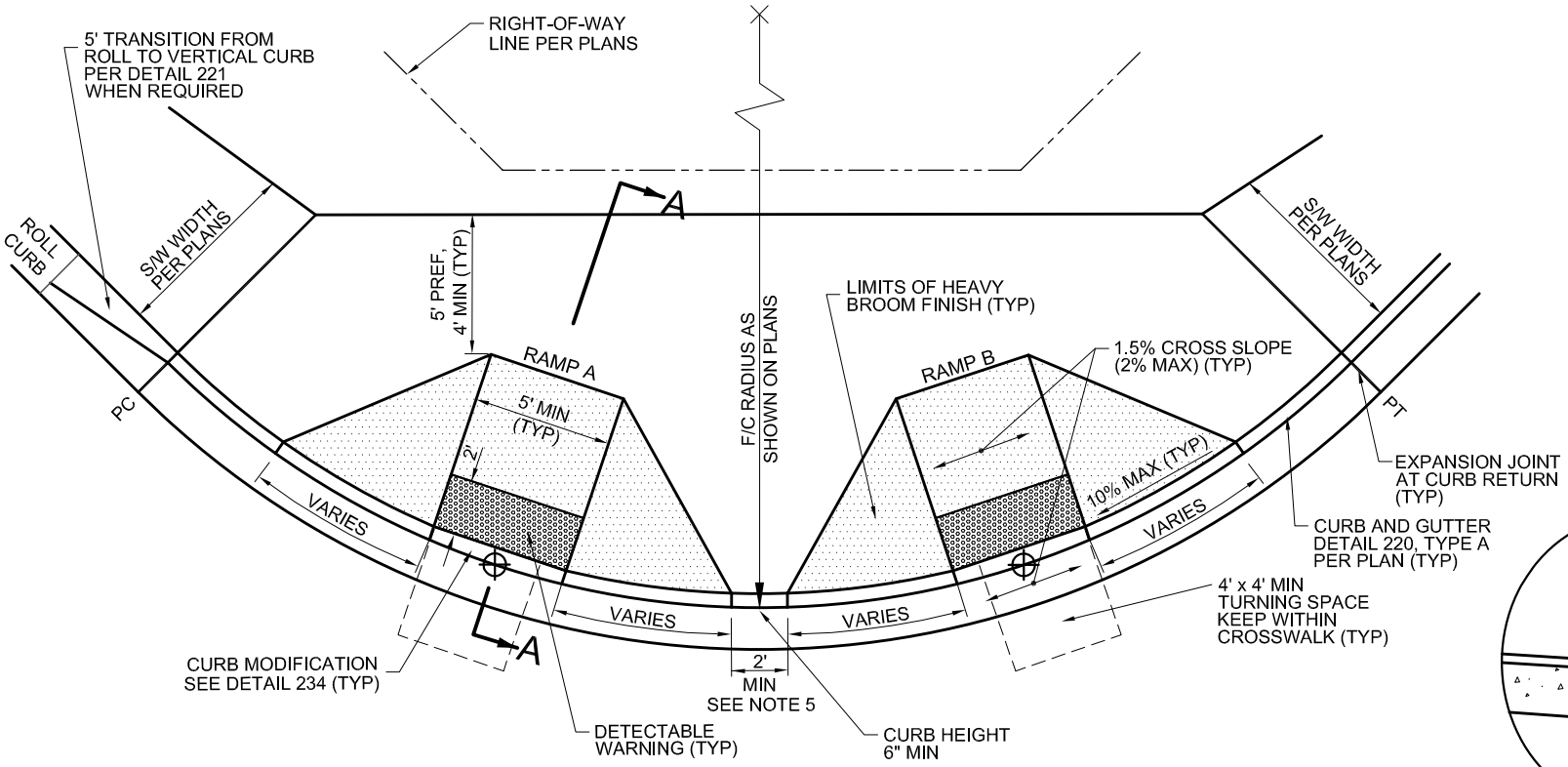

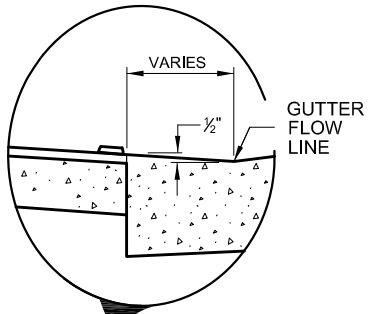

LEGEND

⊕ RAMP CONTROL POINT AT FACE-OF-CURB SEE PLANS (TYP)

NOTES:

1. CLASS 'A' CONCRETE PER SECTION 725, PC TO PT.
2. CONSTRUCTION INCLUDING EXPANSION JOINTS AND MAXIMUM SLOPES SHALL CONFORM TO SECTION 340.
3. WALKWAY SURFACE TO MATCH 1 .5% SLOPE FROM TOP OF CURB.
4. DETECTABLE WARNING IS TO COMPLY WITH THE JURISDICTIONAL AGENCY'S REQUIREMENTS.
5. DISTANCE BETWEEN RAMPS MAY BE ADJUSTED TO IMPROVE ALIGNMENT WITH RECEIVING RAMP WHEN ALLOWED BY THE JURISDICTIONAL AGENCY.
6. SPECIAL DESIGN IS REQUIRED FOR GUTTER GRADES GREATER THAN 2%.

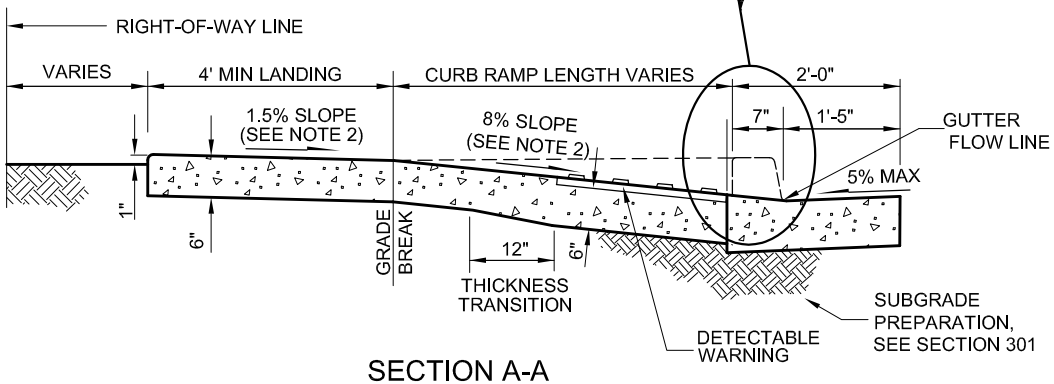

SECTION A-A

DETAIL NO.		STANDARD DETAIL		REVISED	DETAIL NO.
236-1	MARICOPA ASSOCIATION of GOVERNMENTS	ENGLISH	DUAL CURB RAMP (RADIAL, 25' - 35' R) ATTACHED SIDEWALK	01–01–2017	236-1

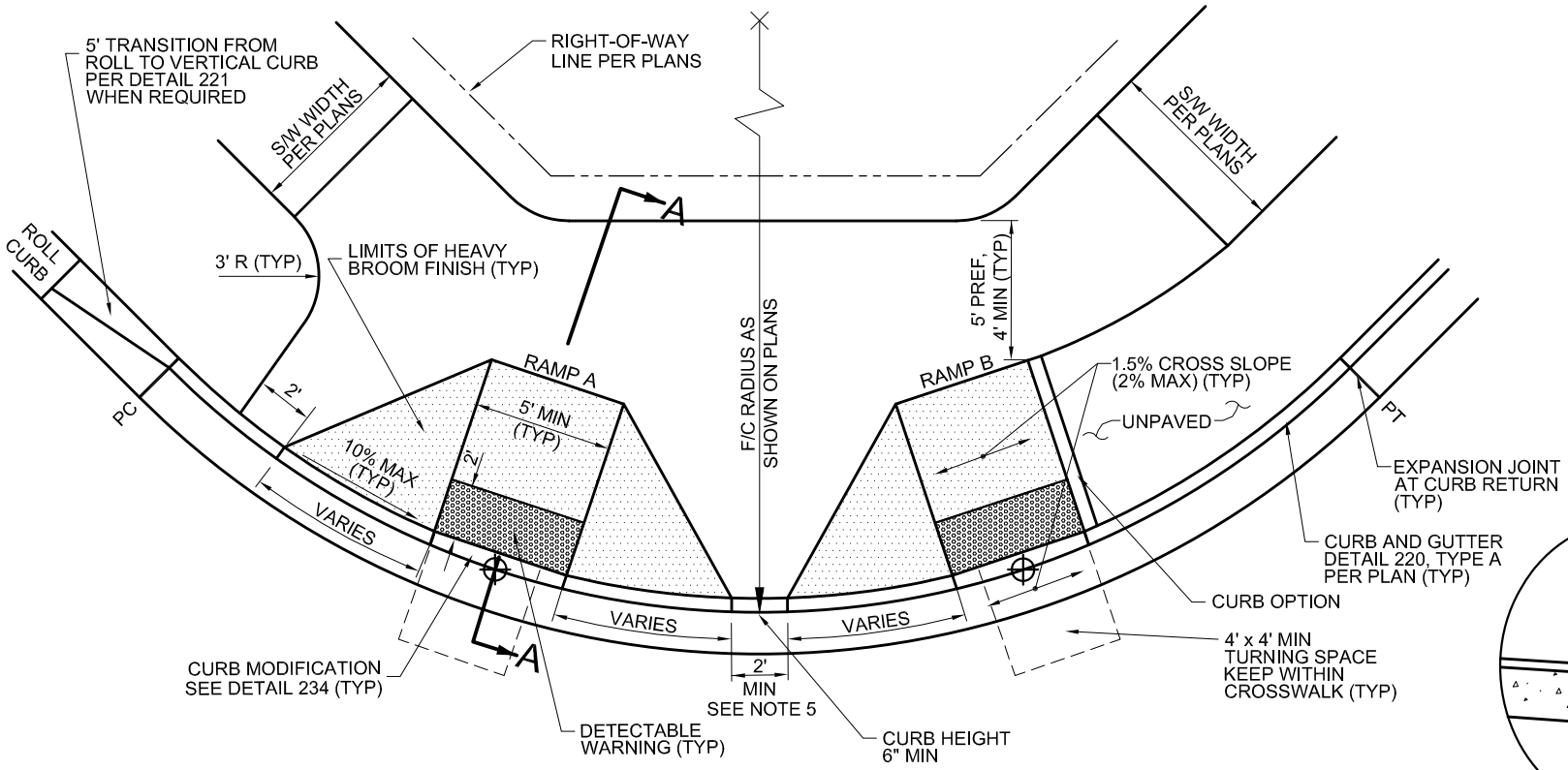

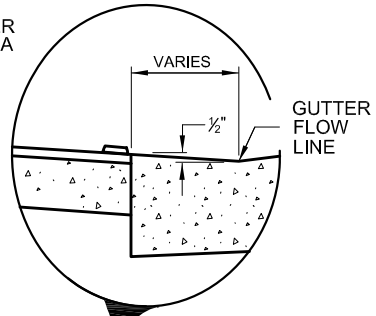

LEGEND

⊕ RAMP CONTROL POINT AT FACE-OF-CURB SEE PLANS (TYP)

NOTES:

1. CLASS 'A' CONCRETE PER SECTION 725, PC TO PT.
2. CONSTRUCTION INCLUDING EXPANSION JOINTS AND MAXIMUM SLOPES SHALL CONFORM TO SECTION 340.
3. WALKWAY SURFACE TO MATCH 1.5% SLOPE FROM TOP OF CURB.
4. DETECTABLE WARNING IS TO COMPLY WITH THE JURISDICTIONAL AGENCY'S REQUIREMENTS.
5. DISTANCE BETWEEN RAMPS MAY BE ADJUSTED TO IMPROVE ALIGNMENT WITH RECEIVING RAMP WHEN ALLOWED BY THE JURISDICTIONAL AGENCY.
6. SPECIAL DESIGN IS REQUIRED FOR GUTTER GRADES GREATER THAN 2%.

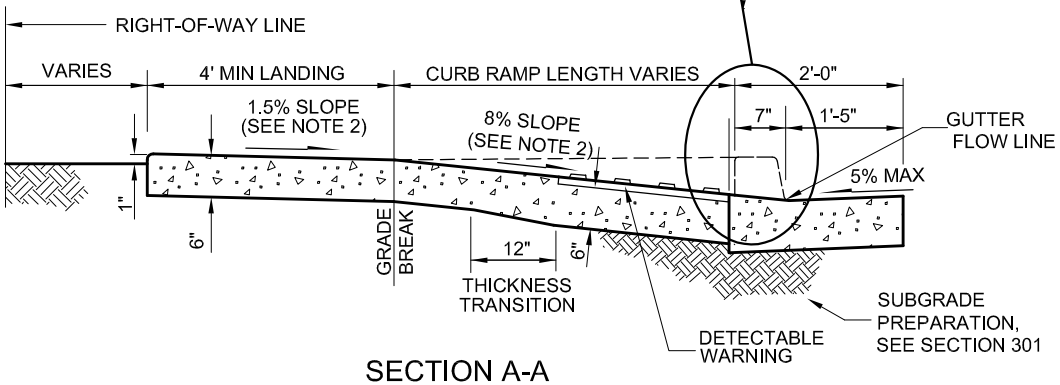

SECTION A-A

DETAIL NO.		STANDARD DETAIL		REVISED	DETAIL NO.
236-2	MARICOPA ASSOCIATION of GOVERNMENTS	ENGLISH	DUAL CURB RAMP (RADIAL, 25' - 35' R) DETACHED SIDEWALK	01–01–2017	236-2

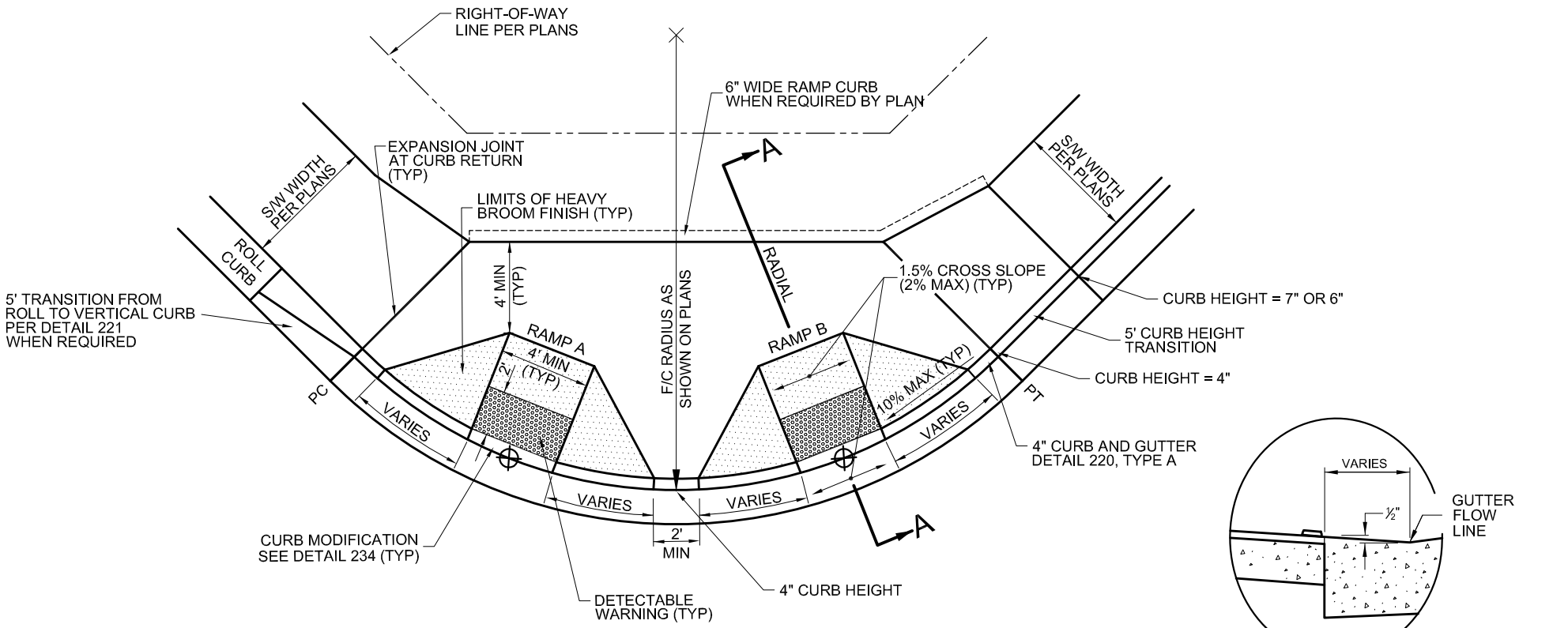

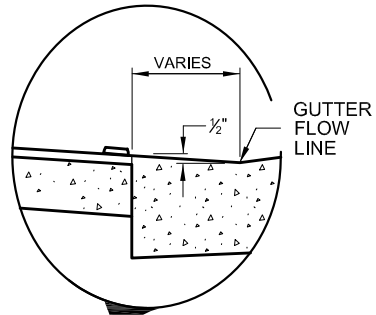

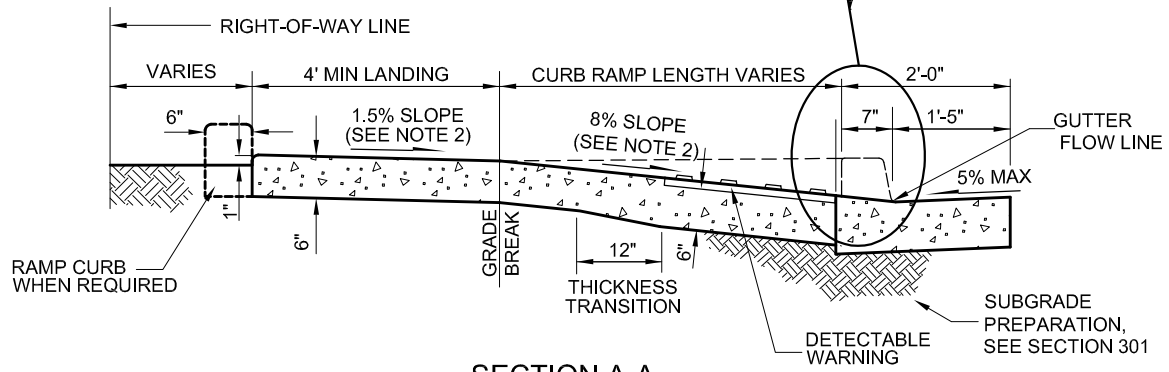

SECTION A-A

LEGEND

⊕ RAMP CONTROL POINT AT FACE-OF-CURB SEE PLANS (TYP)

NOTES:

1. CLASS 'A' CONCRETE PER SECTION 725, PC TO PT.
2. CONSTRUCTION INCLUDING EXPANSION JOINTS AND MAXIMUM SLOPES SHALL CONFORM TO SECTION 340.
3. WALKWAY SURFACE TO MATCH 1.5% SLOPE FROM TOP OF CURB.
4. DETECTABLE WARNING IS TO COMPLY WITH THE JURISDICTIONAL AGENCY'S REQUIREMENTS.
5. SPECIAL DESIGN IS REQUIRED FOR GUTTER GRADES GREATER THAN 2%.

DETAIL NO.				REVISED	DETAIL NO.
236-3	MARICOPA ASSOCIATION of GOVERNMENTS	STANDARD DETAIL ENGLISH	DUAL CURB RAMP (RADIAL, 20' R) ATTACHED SIDEWALK	01–01–2017	236-3

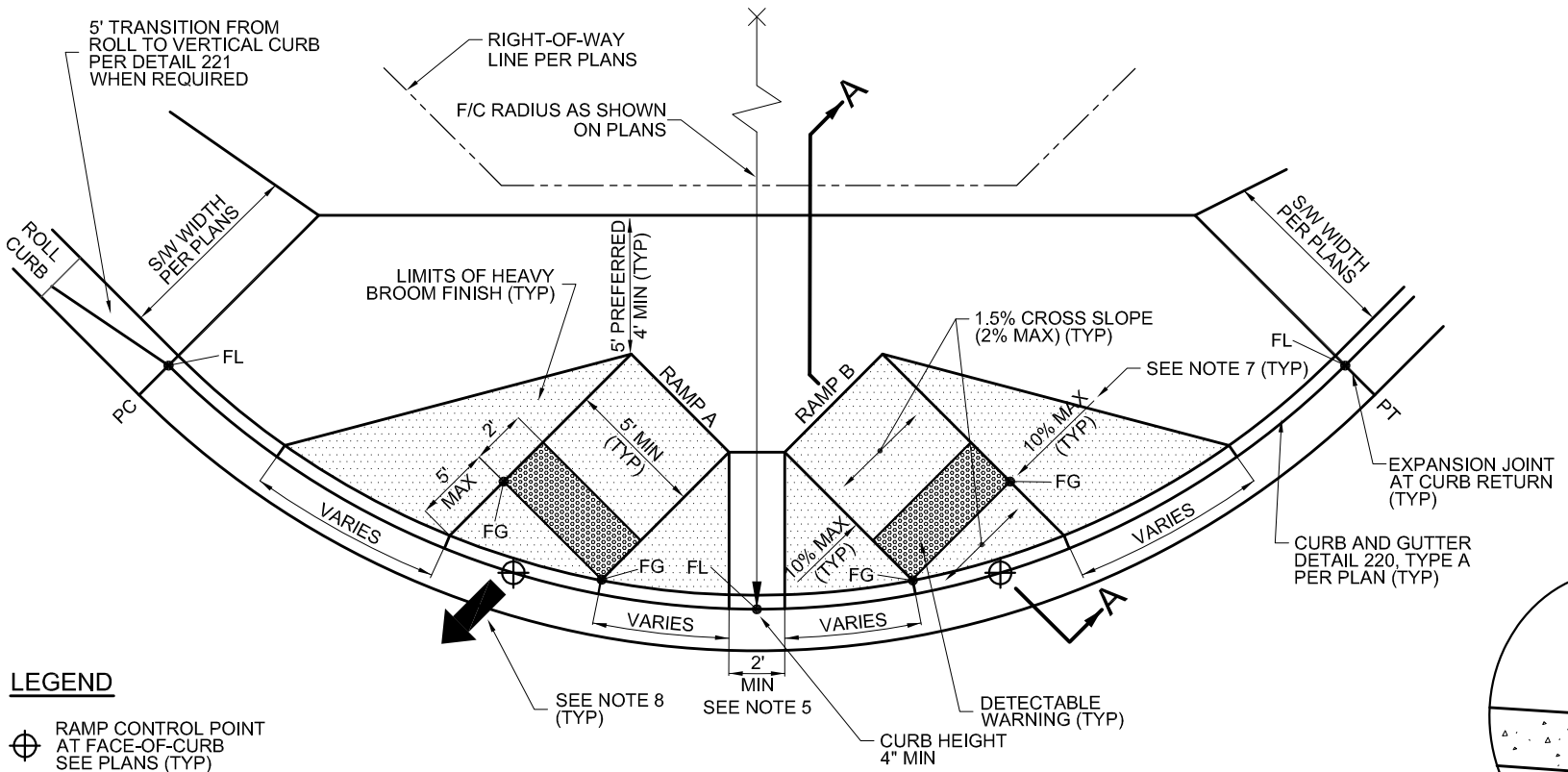

LEGEND

⊕ RAMP CONTROL POINT AT FACE-OF-CURB SEE PLANS (TYP)

• DESIGN ELEVATION SEE PLANS FL = FLOW LINE, FG = FINISHED GRADE

NOTES:

1. CLASS 'A' CONCRETE PER SECTION 725, PC TO PT.
2. CONSTRUCTION INCLUDING EXPANSION JOINTS AND MAXIMUM SLOPES SHALL CONFORM TO SECTION 340.
3. WALKWAY SURFACE TO MATCH 1.5% SLOPE FROM TOP OF CURB.
4. DETECTABLE WARNING IS TO COMPLY WITH THE JURISDICTIONAL AGENCY'S REQUIREMENTS.
5. DISTANCE BETWEEN RAMPS MAY BE ADJUSTED TO IMPROVE ALIGNMENT WITH RECEIVING RAMP WHEN ALLOWED BY THE JURISDICTIONAL AGENCY.
6. SPECIAL DESIGN IS REQUIRED FOR GUTTER GRADES GREATER THAN 2%.
7. WING SLOPE SHALL NOT EXCEED 10% MEASURED PERPENDICULAR TO RAMP.
8. RAMP ALIGNMENT SHOULD CONNECT CONTROL POINT TO CONTROL POINT OF RECEIVING RAMP WITHIN 5 FEET.

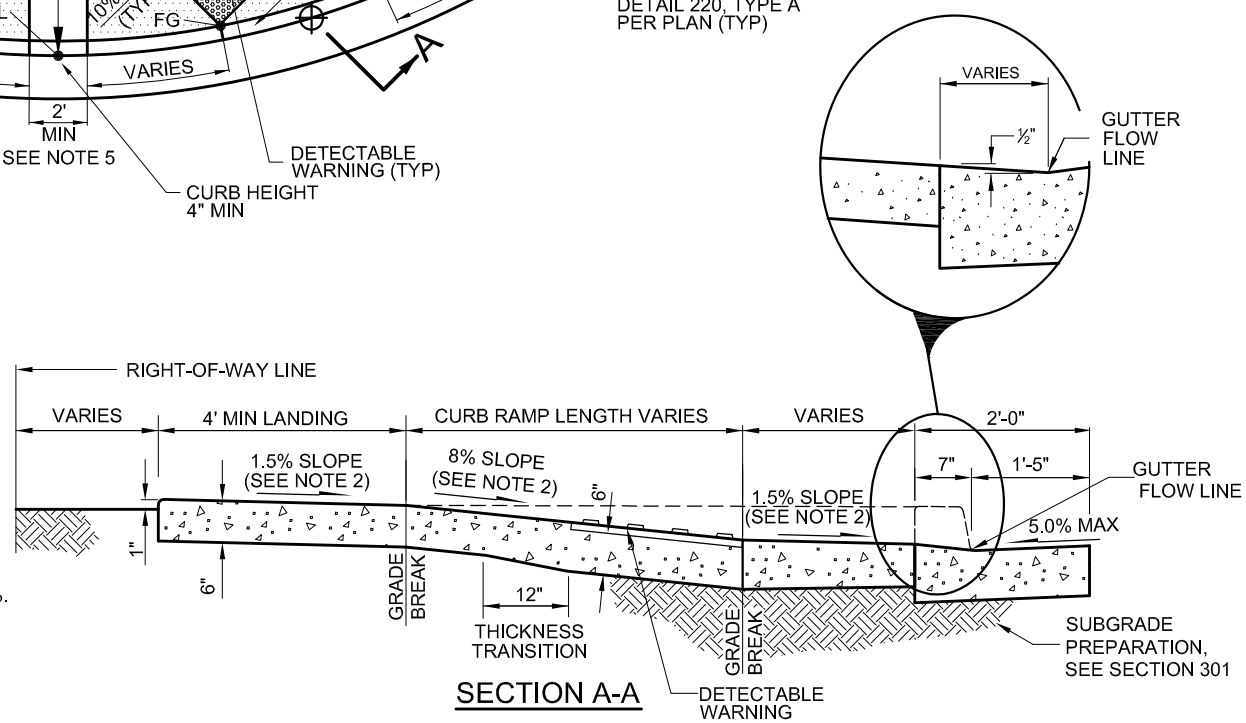

SECTION A-A

DETAIL NO.		STANDARD DETAIL		REVISED	DETAIL NO.
237-1	MARICOPA ASSOCIATION of GOVERNMENTS	ENGLISH	DUAL CURB RAMP (DIRECTIONAL, 25' - 35'R) ATTACHED SIDEWALK	01–01–2017	237-1

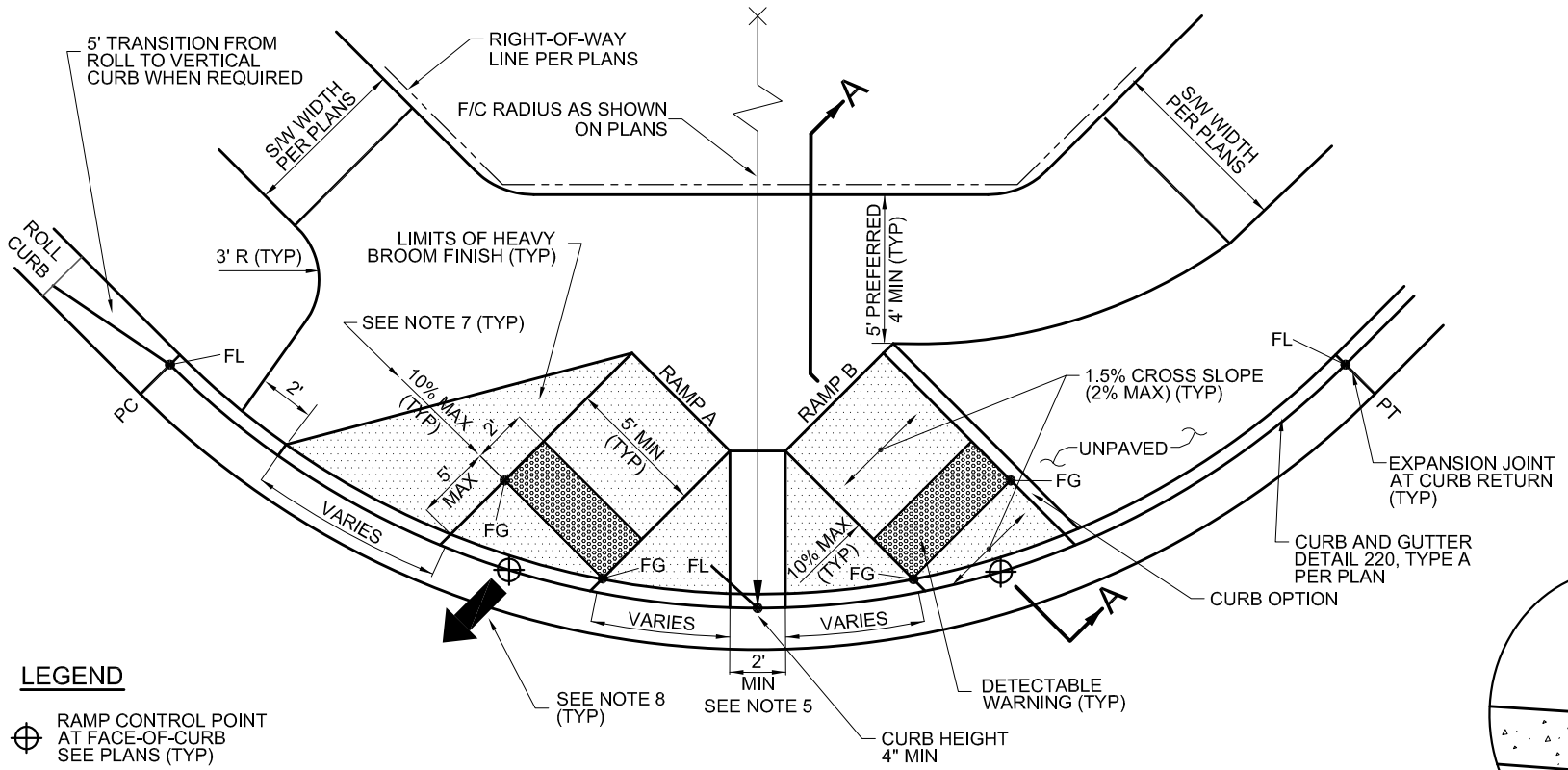

LEGEND

⊕ RAMP CONTROL POINT AT FACE-OF-CURB SEE PLANS (TYP)

• DESIGN ELEVATION SEE PLANS FL = FLOW LINE, FG = FINISHED GRADE

NOTES:

1. CLASS 'A' CONCRETE PER SECTION 725, PC TO PT.
2. CONSTRUCTION INCLUDING EXPANSION JOINTS AND MAXIMUM SLOPES SHALL CONFORM TO SECTION 340.
3. WALKWAY SURFACE TO MATCH 1.5% SLOPE FROM TOP OF CURB.
4. DETECTABLE WARNING IS TO COMPLY WITH THE JURISDICTIONAL AGENCY'S REQUIREMENTS.
5. DISTANCE BETWEEN RAMPS MAY BE ADJUSTED TO IMPROVE ALIGNMENT WITH RECEIVING RAMP WHEN ALLOWED BY THE JURISDICTIONAL AGENCY.
6. SPECIAL DESIGN IS REQUIRED FOR GUTTER GRADES GREATER THAN 2%.
7. WING SLOPE SHALL NOT EXCEED 10% MEASURED PERPENDICULAR TO RAMP.
8. RAMP ALIGNMENT SHOULD CONNECT CONTROL POINT TO CONTROL POINT OF RECEIVING RAMP WITHIN 5 FEET.

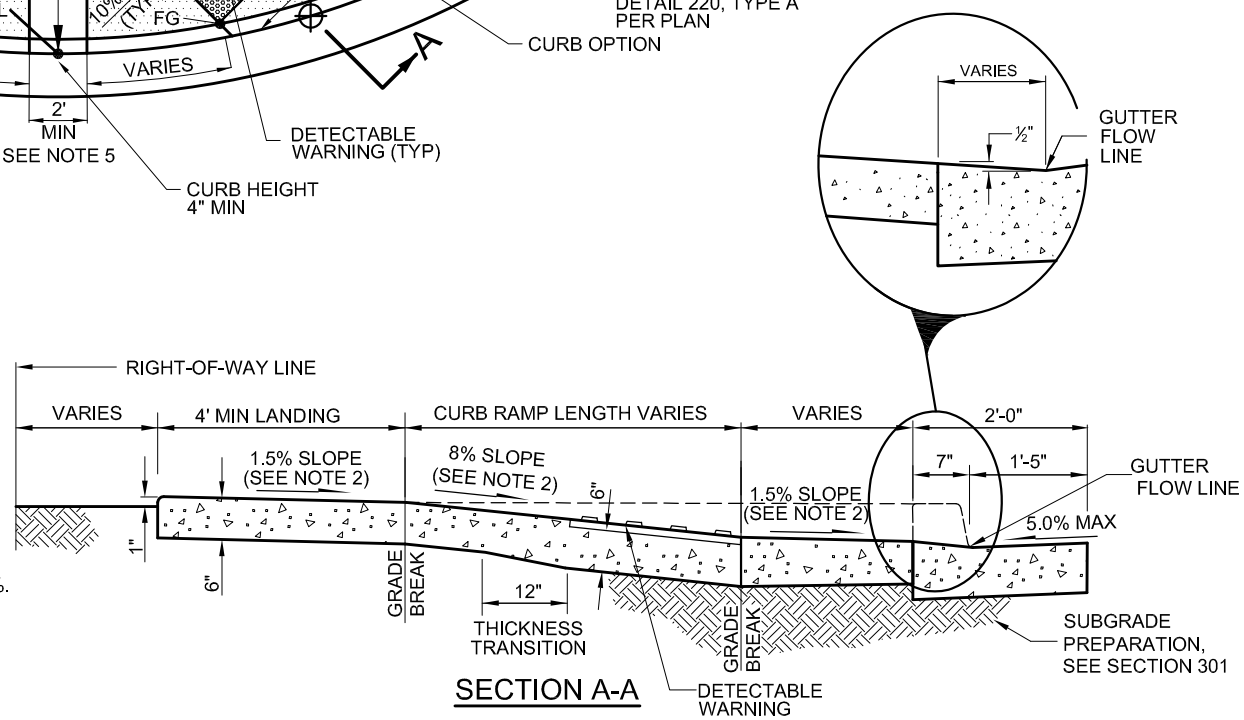

SECTION A-A

DETAIL NO.		STANDARD DETAIL		PROPOSED	DETAIL NO.
237-2	MARICOPA ASSOCIATION of GOVERNMENTS	ENGLISH	DUAL CURB RAMP (DIRECTIONAL, 25' - 35'R) DETACHED SIDEWALK	01–01–2017	237-2

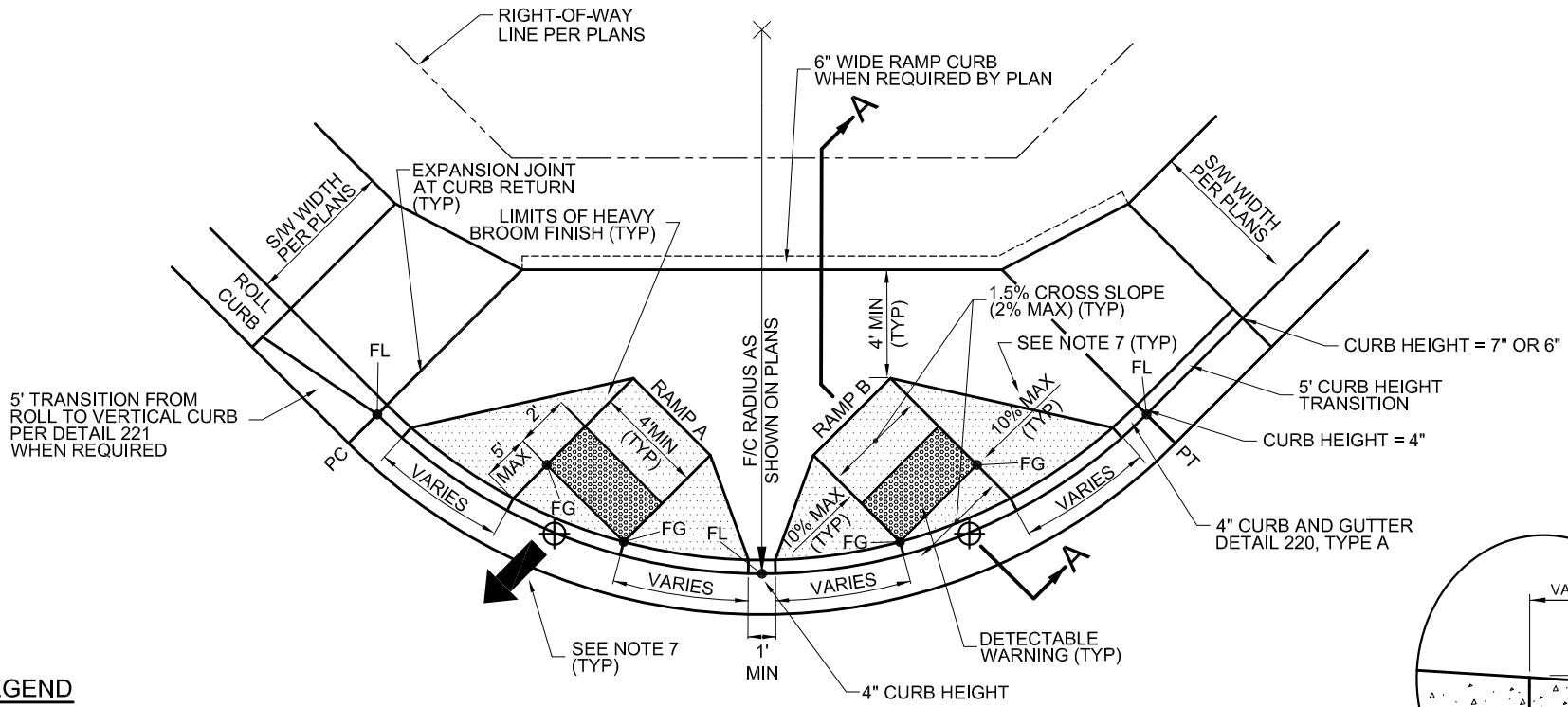

LEGEND

⊕ RAMP CONTROL POINT AT FACE-OF-CURB SEE PLANS (TYP)

● DESIGN ELEVATION SEE PLANS FL = FLOW LINE, FG = FINISHED GRADE

NOTES:

1. CLASS 'A' CONCRETE PER SECTION 725, PC TO PT.
2. CONSTRUCTION INCLUDING EXPANSION JOINTS AND MAXIMUM SLOPES SHALL CONFORM TO SECTION 340.
3. WALKWAY SURFACE TO MATCH 1.5% SLOPE FROM TOP OF CURB.
4. DETECTABLE WARNING IS TO COMPLY WITH THE JURISDICTIONAL AGENCY'S REQUIREMENTS.
5. SPECIAL DESIGN IS REQUIRED FOR GUTTER GRADES GREATER THAN 2%.
6. WING SLOPE SHALL NOT EXCEED 10% MEASURED PERPENDICULAR TO RAMP.
7. RAMP ALIGNMENT SHOULD CONNECT CONTROL POINT TO CONTROL POINT OF RECEIVING RAMP WITHIN 5 FEET.

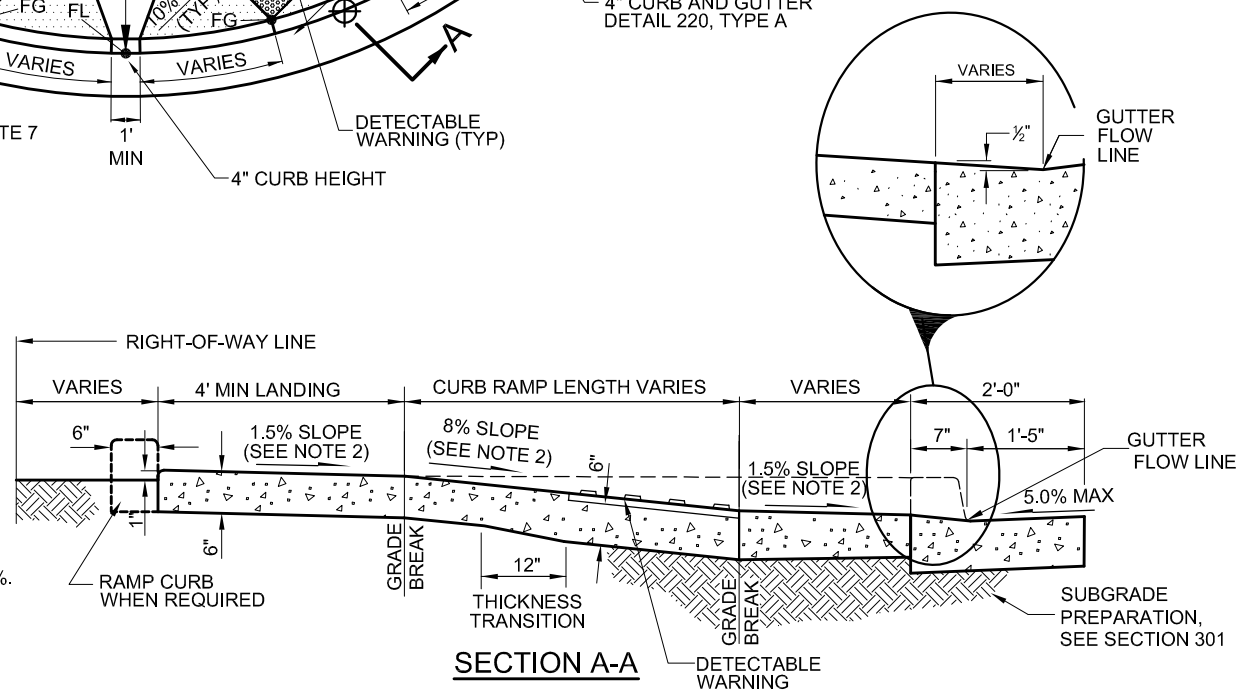

SECTION A-A

DETAIL NO.		STANDARD DETAIL		REVISED	DETAIL NO.
237-3	MARICOPA ASSOCIATION of GOVERNMENTS	ENGLISH	DUAL CURB RAMP (DIRECTIONAL, 20' R) ATTACHED SIDEWALK	01–01–2017	237-3

NOTES:

1. ALL CONCRETE TO BE CLASS 'A' UNLESS OTHERWISE APPROVED (SECTION 725).
2. EITHER A CONSTRUCTION JOINT OR CONTRACTION JOINT IS REQUIRED AT THE STREET CENTERLINE.
3. A SEPARATE CONCRETE PAD IS REQUIRED AT ALL EXPANSION JOINTS AND ALL CONSTRUCTION JOINTS.
4. EXPANSION JOINTS SHALL COMFORM TO SECTION 340.
5. CONTRACTION JOINTS SHALL SEPARATE LARGE AGGREGATE BY MOVING THE AGGREGATE TO EITHER SIDE OF THE JOINT FOR A MINIMUM DEPTH OF 2½ INCHES. THE FINISHED JOINT SHALL HAVE 1/4 INCH MAXIMUM RADII AT THE TOP SURFACE AND BE A MINIMUM OF 3/4 INCHES OF DEPTH.

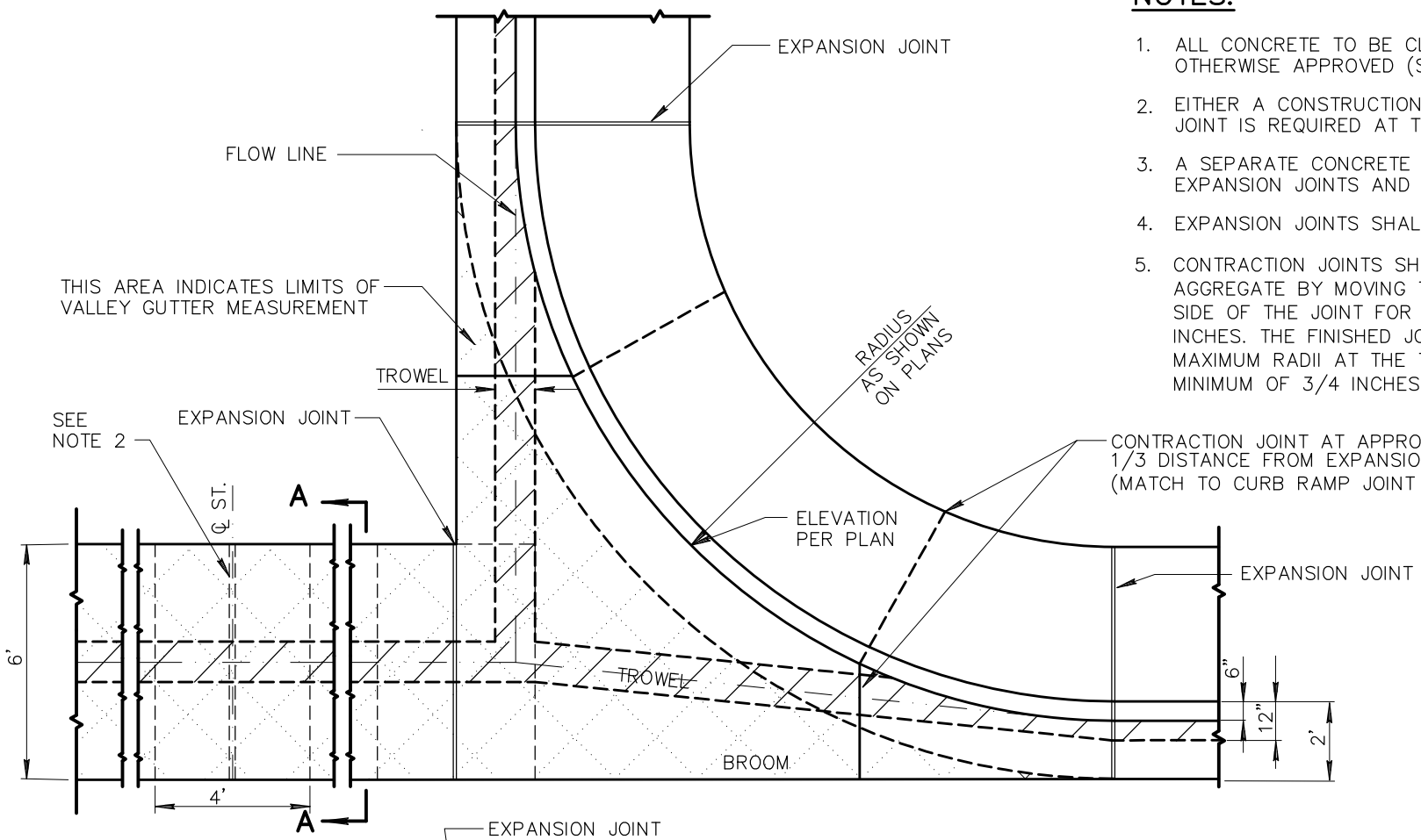

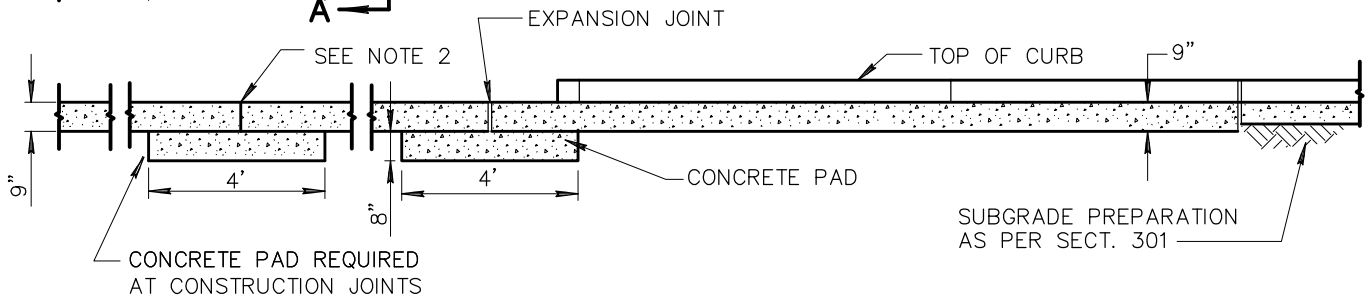

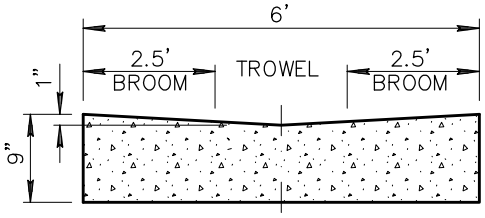

SECTION A–A
VALLEY GUTTER

DETAIL NO.				REVISED	DETAIL NO.
240	MARICOPA ASSOCIATION of GOVERNMENTS	STANDARD DETAIL ENGLISH	VALLEY GUTTER	01–01–2010	240

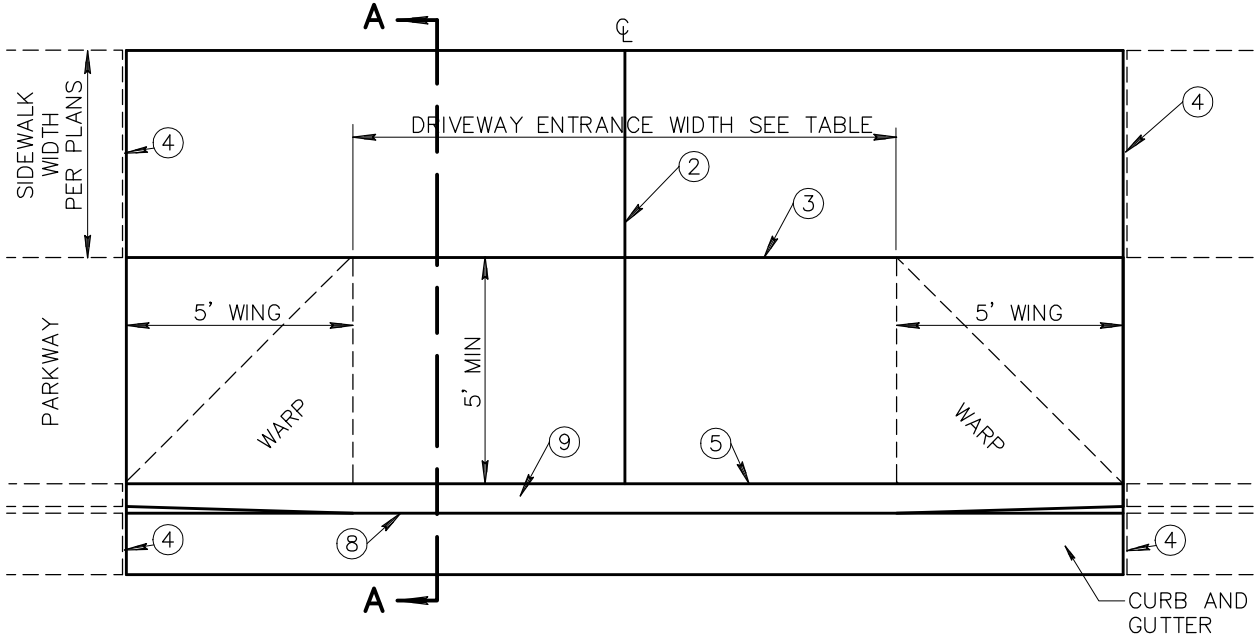

DRIVEWAY WITH DETACHED SIDEWALK

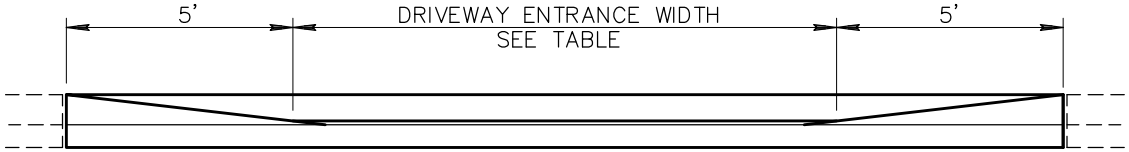

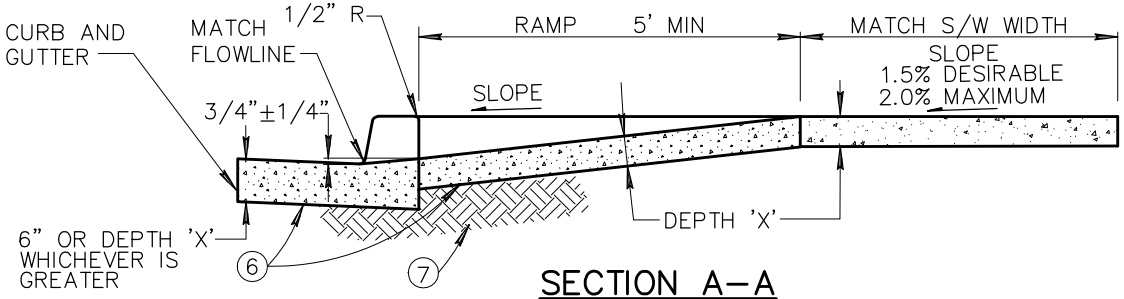

SECTION A–A

NOTES:

1. DEPRESSED CURB SHALL BE PAID FOR AT THE CONTRACT UNIT PRICE FOR THE TYPE OF CURB USED AT THAT LOCATION.
2. CONTRACTION JOINT ON D/W CENTERLINE.
3. CONTRACTION JOINT.
4. 1/2–INCH EXPANSION JOINTS SHALL COMPLY WITH SECTION 340.
5. BACK OF CURB – CONSTRUCTION JOINT.
6. CONCRETE CLASS AS NOTED IN TABLE. CONCRETE PER SECTION 725.
7. SUBGRADE PREPARATION, SECT. 301.
8. FLOW LINE OF GUTTER.
9. DEPRESSED CURB.
10. SECT. A–A AND ELEVATION: D/W SHOWN WITH VERTICAL CURB AND GUTTER, ROLL TYPE CURB AND GUTTER TREATED SIMILARLY.
11. ROUGH BROOM FINISH FULL WIDTH OF RAMP AND WINGS.
12. TROWEL AND USE LIGHT HAIR BROOM FINISH FOR WALKWAY AREA.
13. 'DRIVEWAY ENTRANCE WIDTH' IS THE DRIVEWAY WIDTH PLUS ADDITIONAL WIDENING REQUIRED BY THE LOCAL JURISDICTION.
14. ELEVATION AT TOP OF DRIVEWAY RAMP SHALL BE EQUAL TO OR HIGHER THAN NORMAL CURB ELEVATION.

COMMERCIAL AND INDUSTRIAL

DRIVEWAY ENTRANCE WIDTH	MIN.	MAX.	CLASS	DEPTH 'X'
COMMERCIAL	✱ 16'	40'	A	9"
INDUSTRIAL	✱ 16'	40'	A	9"
✱24' MIN. FOR TWO WAY TRAFFIC				

RESIDENTIAL

DRIVEWAY ENTRANCE WIDTH	MIN.	MAX.	CLASS	DEPTH 'X'
MAJOR STREET	16'	30'	B	5"
COLLECTOR STREET	✱ 12'	30'	B	5"
LOCAL STREET	12'	30'	B	5"
✱16' DESIRABLE				

DETAIL NO.				REVISED	DETAIL NO.
250–1	MARICOPA ASSOCIATION of GOVERNMENTS	STANDARD DETAIL ENGLISH	DRIVEWAY ENTRANCES WITH DETACHED SIDEWALK	01–01–2014	250–1

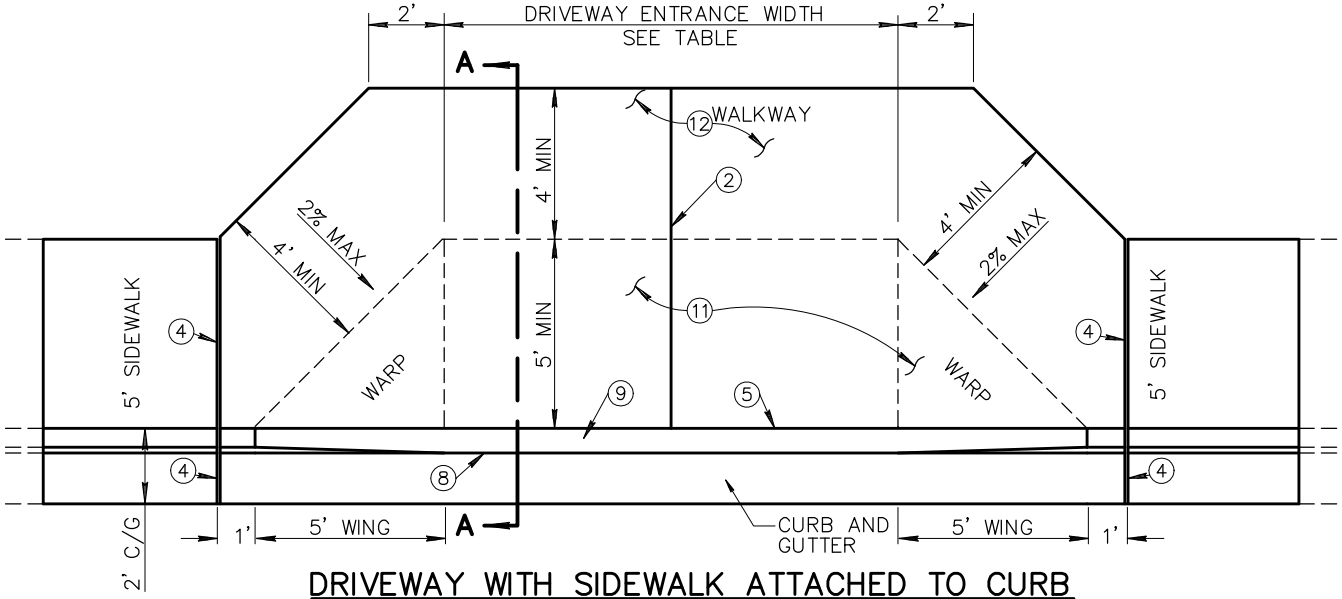

DRIVEWAY WITH SIDEWALK ATTACHED TO CURB

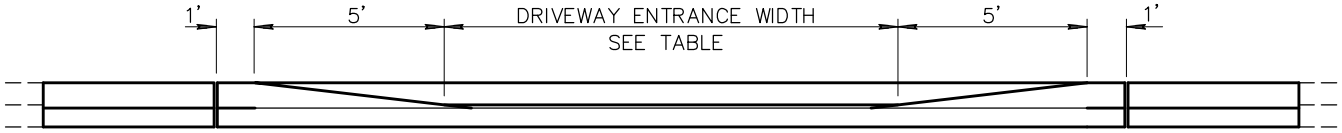

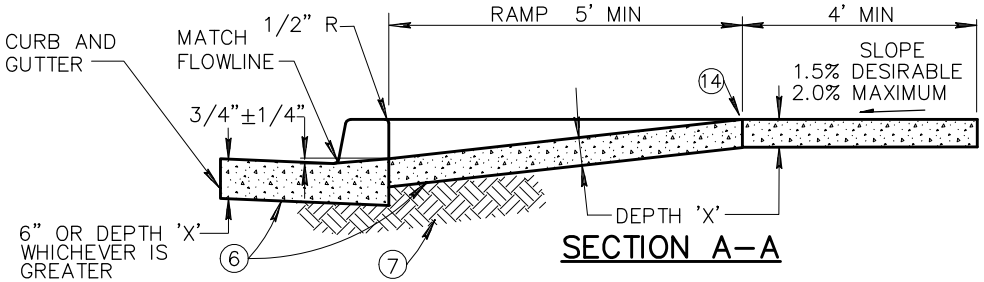

SECTION A–A

NOTES:

1. DEPRESSED CURB SHALL BE PAID FOR AT THE CONTRACT UNIT PRICE FOR THE TYPE OF CURB USED AT THAT LOCATION.
2. CONTRACTION JOINT(S) FOR DRIVEWAY ENTRANCE: WIDTH LESS THAN 22' NONE REQUIRED; WIDTH GREATER THAN 22' AND LESS THAN 30' LOCATE SINGLE JOINT ON D/W CENTERLINE; WIDTH OF 30' OR GREATER LOCATE TWO JOINTS TO EQUALLY DIVIDE THE DRIVEWAY ENTRANCE WIDTH.
3. DETAIL GEOMETRICS ARE BASED ON A CURB HEIGHT OF SIX INCHES (6"), AN ATTACHED SIDEWALK WIDTH OF FIVE FEET (5'), AND A DRIVEWAY RAMP LENGTH NOT EXCEEDING SIX FEET (6'). GEOMETRIC MODIFICATIONS MAY BE REQUIRED WHEN CONDITIONS ARE MODIFIED.
4. 1/2–INCH EXPANSION JOINTS SHALL COMPLY WITH SECTION 340.
5. BACK OF CURB – CONSTRUCTION JOINT.
6. CONCRETE CLASS AS NOTED IN TABLE. CONCRETE PER SECTION 725.
7. SUBGRADE PREPARATION, SECT. 301.
8. FLOW LINE OF GUTTER.
9. DEPRESSED CURB.
10. SECT. A–A AND ELEVATION: D/W SHOWN WITH VERTICAL CURB AND GUTTER, ROLL TYPE CURB AND GUTTER TREATED SIMILARLY.
11. ROUGH BROOM FINISH FULL WIDTH OF RAMP AND WINGS.
12. TROWEL AND USE LIGHT HAIR BROOM FINISH FOR WALKWAY AREA.
13. 'DRIVEWAY ENTRANCE WIDTH' IS THE DRIVEWAY WIDTH PLUS ADDITIONAL WIDENING REQUIRED BY THE LOCAL JURISDICTION.
14. ELEVATION AT TOP OF DRIVEWAY RAMP SHALL BE EQUAL TO OR HIGHER THAN NORMAL CURB ELEVATION.

COMMERCIAL AND INDUSTRIAL				
DRIVEWAY ENTRANCE WIDTH	MIN.	MAX.	CLASS	DEPTH 'X'
COMMERCIAL	✳ 16'	40'	A	9"
INDUSTRIAL	✳ 16'	40'	A	9"
✳24' MIN. FOR TWO WAY TRAFFIC				

RESIDENTIAL				
DRIVEWAY ENTRANCE WIDTH	MIN.	MAX.	CLASS	DEPTH 'X'
MAJOR STREET	16'	30'	B	5"
COLLECTOR STREET	✳ 12'	30'	B	5"
LOCAL STREET	12'	30'	B	5"
✳16' DESIRABLE				

DETAIL NO.				REVISED	DETAIL NO.
250–2	MARICOPA ASSOCIATION of GOVERNMENTS	STANDARD DETAIL ENGLISH	DRIVEWAY ENTRANCES WITH SIDEWALK ATTACHED TO CURB	01–01–2013	250–2

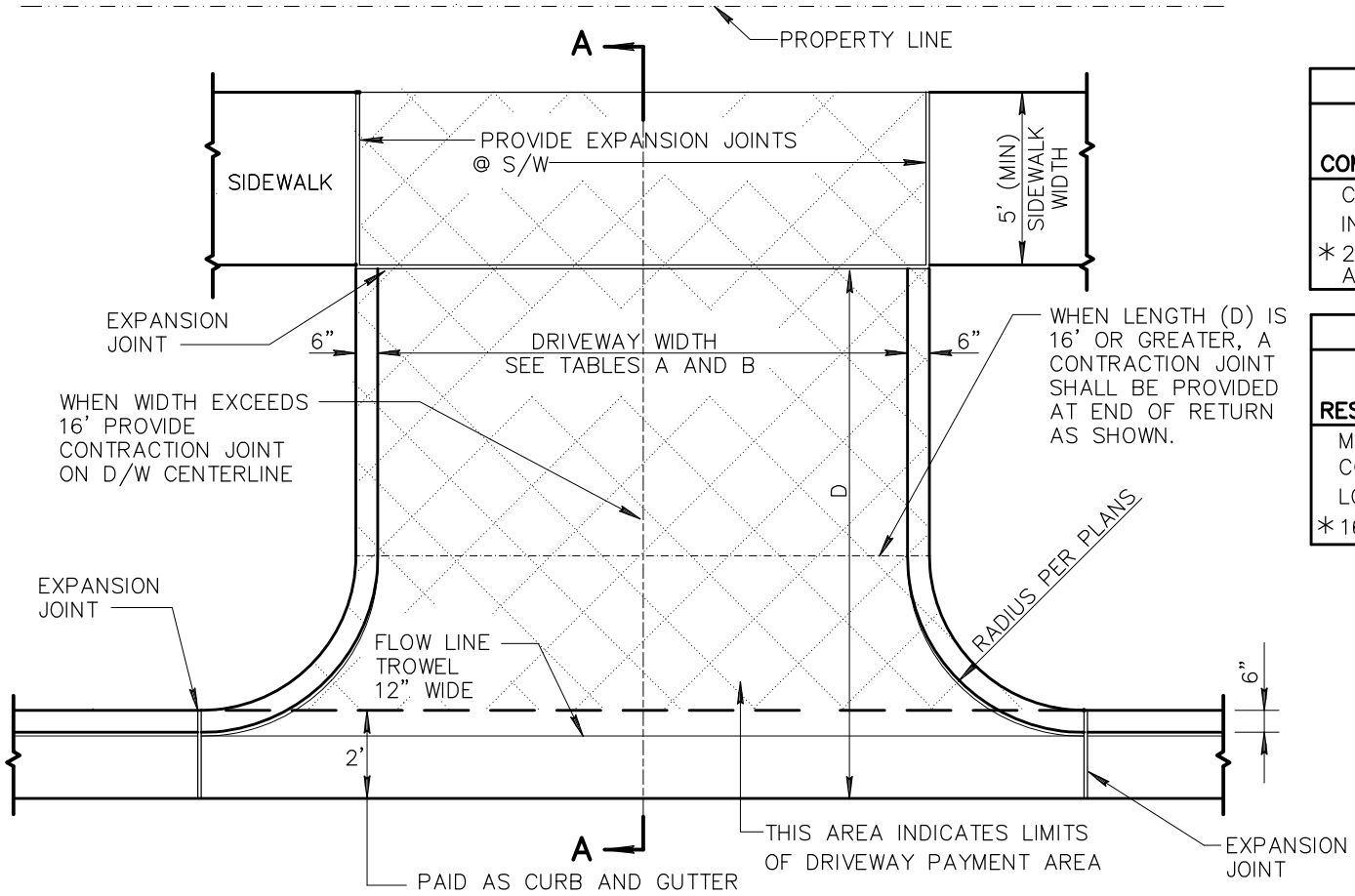

TABLE A		
ZONING	DRIVEWAY WIDTH	
COMMERCIAL AND INDUSTRIAL	MIN*	MAX
COMMERCIAL	16'	40'
INDUSTRIAL	16'	40'
* 24' WHERE 2-WAY TRAFFIC IS ANTICIPATED		

TABLE B		
ZONING	DRIVEWAY WIDTH	
RESIDENTIAL	MIN*	MAX
MAJOR STREET	16'	30'
COLLECTOR STREET	12'	30'
LOCAL STREET	12'	30'
* 16' WIDTH IS DESIRABLE		

NOTES:

1. EXPANSION JOINT SHALL COMPLY TO SECTION 340.
2. THIS TYPE D/W TO BE USED ONLY UPON APPROVAL OF ENGINEER.
3. CONCRETE:
   RESIDENTIAL CLASS B
   COMMERCIAL AND INDUSTRIAL CLASS A

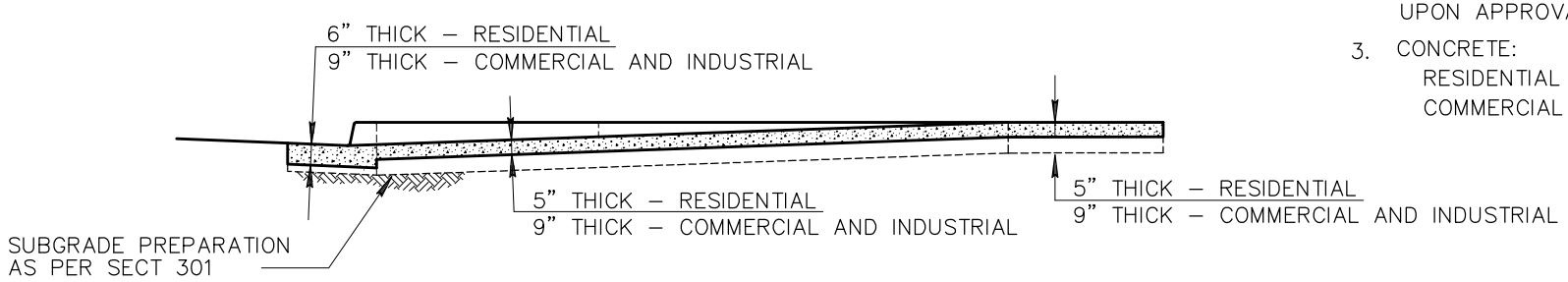

SECTION A–A

DETAIL NO.				REVISED	DETAIL NO.
251	MARICOPA ASSOCIATION of GOVERNMENTS	STANDARD DETAIL ENGLISH	RETURN TYPE DRIVEWAYS	01-01-2017	251

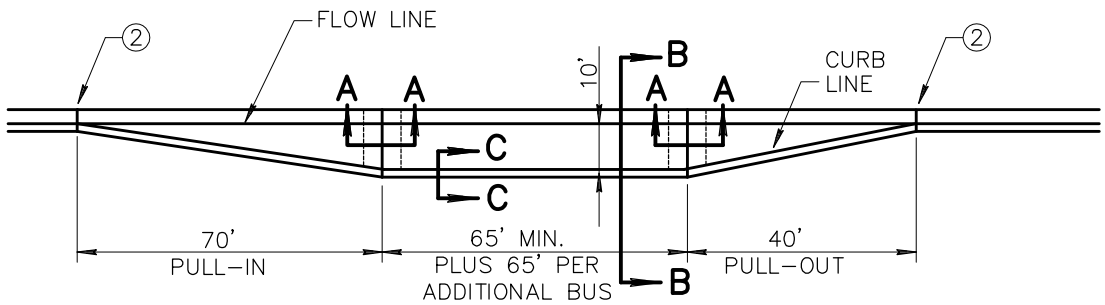

DETAIL

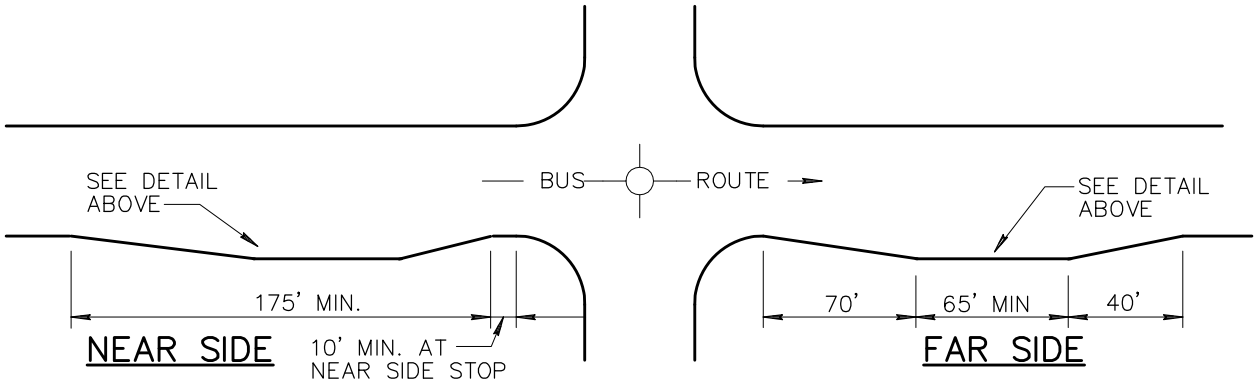

NEAR SIDE

FAR SIDE

NOTES:

1. SUFFICIENT RIGHT-OF-WAY MUST BE AVAILABLE TO CONSTRUCT THE BUS BAY.
2. 1/2" BITUMINOUS PREFORMED EXPANSION JOINT FILLER ASTM D-1751 PER SPECIFICATION SECTION 729.
3. SUBGRADE PREPARATION PER SPECIFICATION SECTION 301 COMPACTED TO 95% MINIMUM DENSITY.
4. CONCRETE SHALL BE CLASS 'A' PER SPECIFICATION SECTION 725.
5. CONCRETE BUS BAY PAVEMENT SHALL BE BROOM FINISHED, EXCEPT WHERE OTHERWISE NOTED.
6. CONTRACTION JOINTS IN THE BUS BAY PAVEMENT SHALL MATCH THOSE IN THE CURB, 15 FT. MAXIMUM SPACING.
7. CONCRETE BEARING PAD (SECTION A-A) TO BE POURED SEPARATELY FROM CONCRETE BUS BAY PAVEMENT.

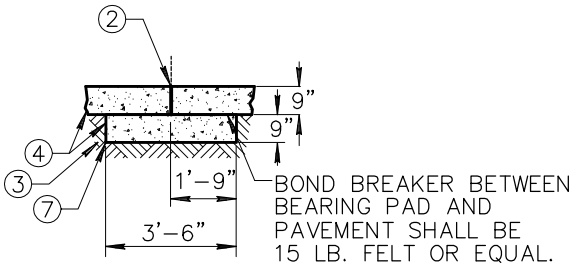

SECTION A-A

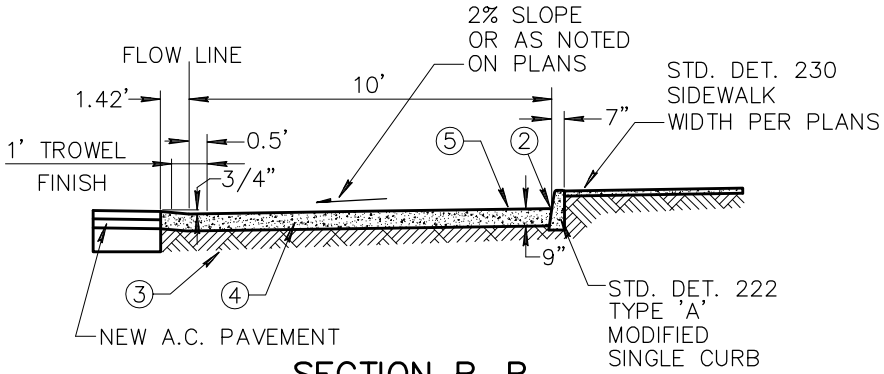

SECTION B-B

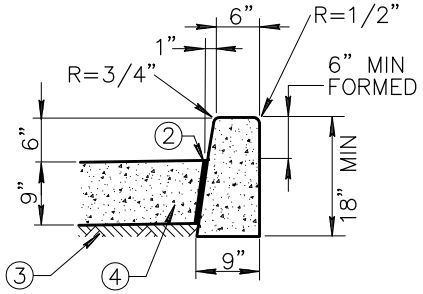

SECTION C-C

STD. DET. 222 TYPE 'A' MODIFIED SINGLE CURB

DETAIL NO.				REVISED	DETAIL NO.
252	MARICOPA ASSOCIATION of GOVERNMENTS	STANDARD DETAIL ENGLISH	BUS BAYS	01-01-2005	252

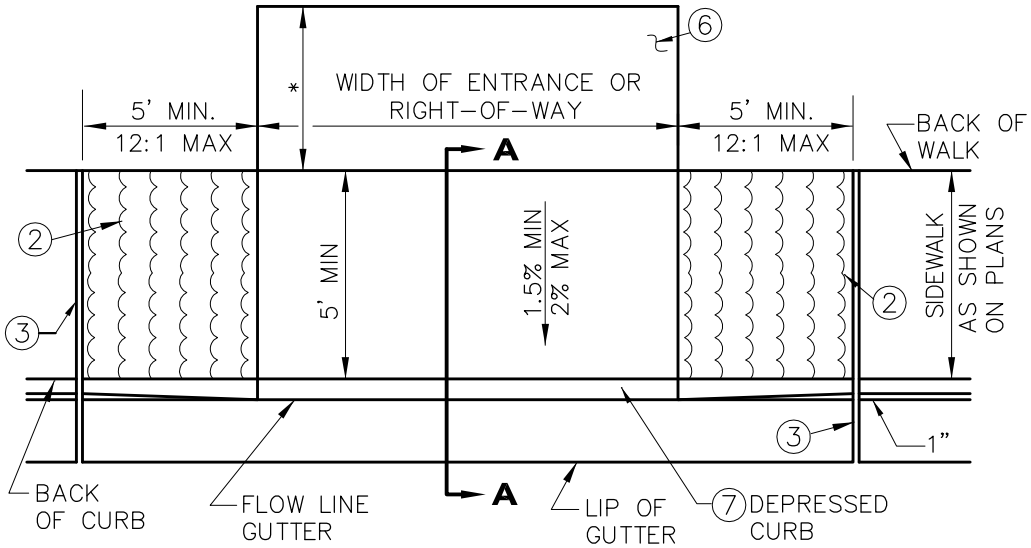

TYPE A - WITHOUT RETAINING CURB

*SEE PLANS FOR ALLEY SURFACING REQUIREMENTS

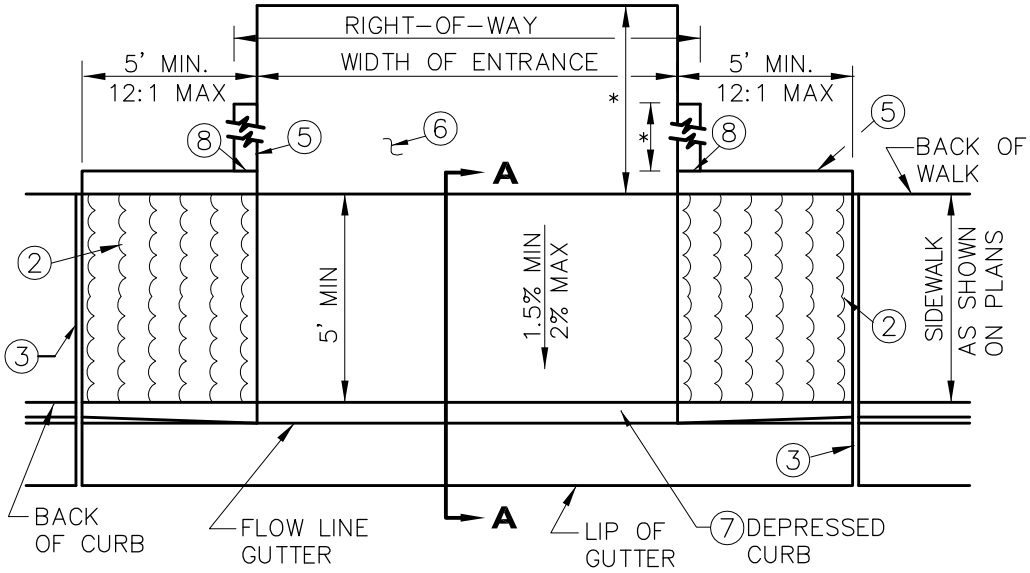

TYPE B - WITH RETAINING CURB

* SEE PLANS FOR RETAINING CURB LENGTHS,
TOP OF CURB ELEVATIONS, AND ALLEY SURFACING REQUIREMENTS

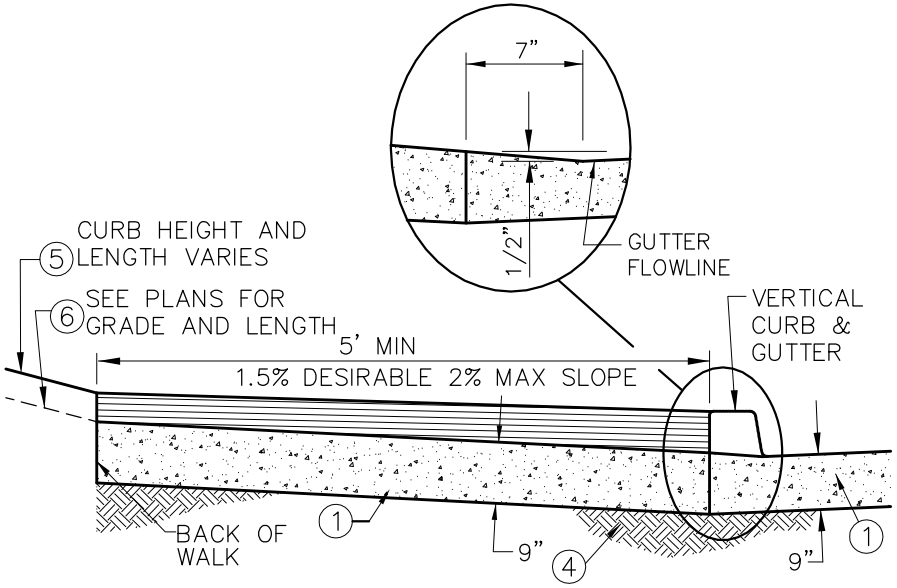

SECTION A-A

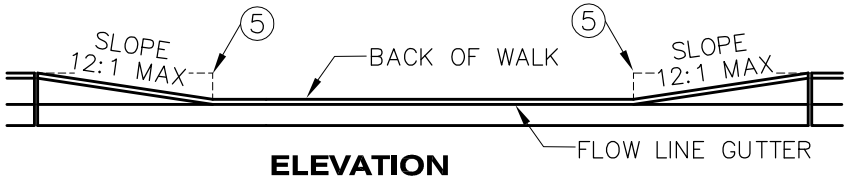

ELEVATION

NOTES:

1. CLASS "A" CONCRETE PER SECTION 725.
2. LIMITS OF HEAVY ROUGH BROOM FINISH.
3. EXPANSION JOINTS PER SECTION 340.
4. SUBGRADE PREPARATION PER SECTION 301.
5. SINGLE CURB PER DETAIL 222, TYPE "B".
6. ALLEY SURFACING PER PLANS.
7. DEPRESSED CURB SHALL BE PAID FOR AT THE CONTRACT UNIT PRICE FOR THE TYPE OF CURB USED AT THAT LOCATION.
8. CONTROL JOINT.

DETAIL NO.				REVISED	DETAIL NO.
260	MARICOPA ASSOCIATION of GOVERNMENTS	STANDARD DETAIL ENGLISH	ALLEY ENTRANCE (WITH VERTICAL CURB AND GUTTER)	01-01-2013	260

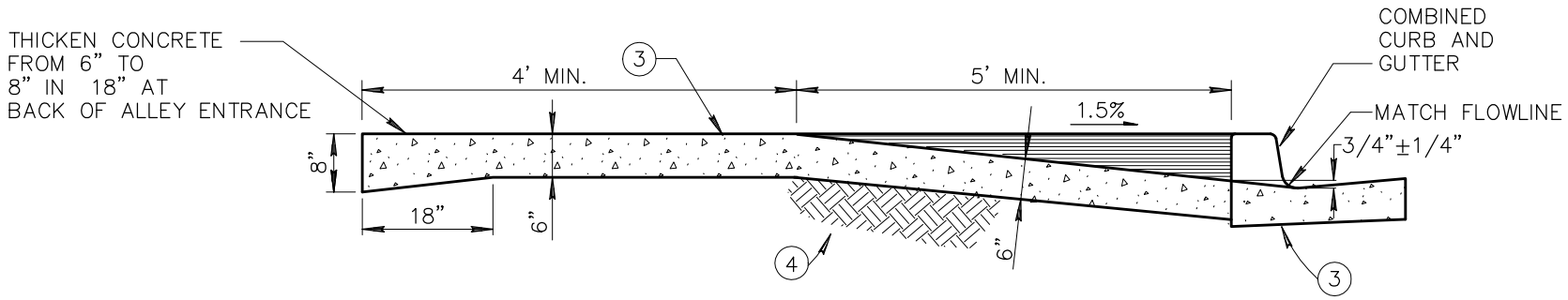

SECTION A–A

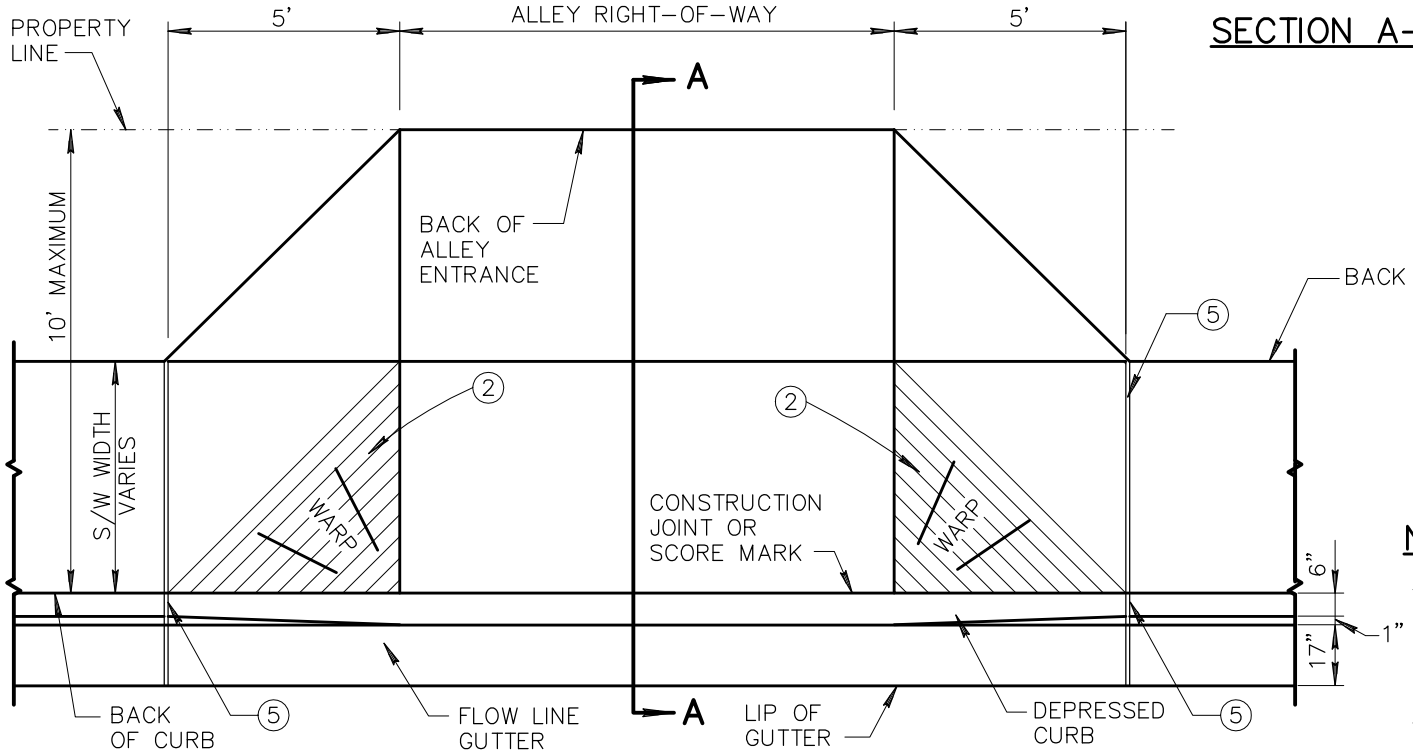

PLAN

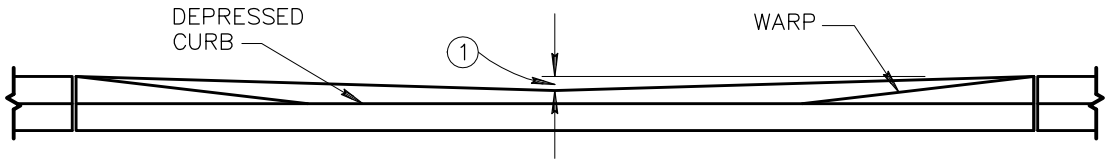

ELEVATION

NOTES:

1. IF ALLEY ENTRANCE IS USED FOR DRAINAGE, THE CENTER BACK OF ALLEY ENTRANCE MAY BE DEPRESSED 2" FOR 4" CURB OR 3" FOR 6" CURB.
2. ROUGH BROOM FINISH FULL WIDTH OF 5' WARP SECTION, EACH SIDE SIDE OF ALLEY ENTRANCE.
3. CLASS 'B' CONCRETE CONSTRUCTION PER SECT. 725.
4. SUBGRADE PREPARATION, PER SECT. 301.
5. EXPANSION JOINTS SHALL CONFORM TO SECTION 340.

DETAIL NO.				REVISED	DETAIL NO.
262	MARICOPA ASSOCIATION of GOVERNMENTS	STANDARD DETAIL ENGLISH	WING TYPE ALLEY ENTRANCE (WITH COMBINED CURB AND GUTTER)	01–01–2012	262

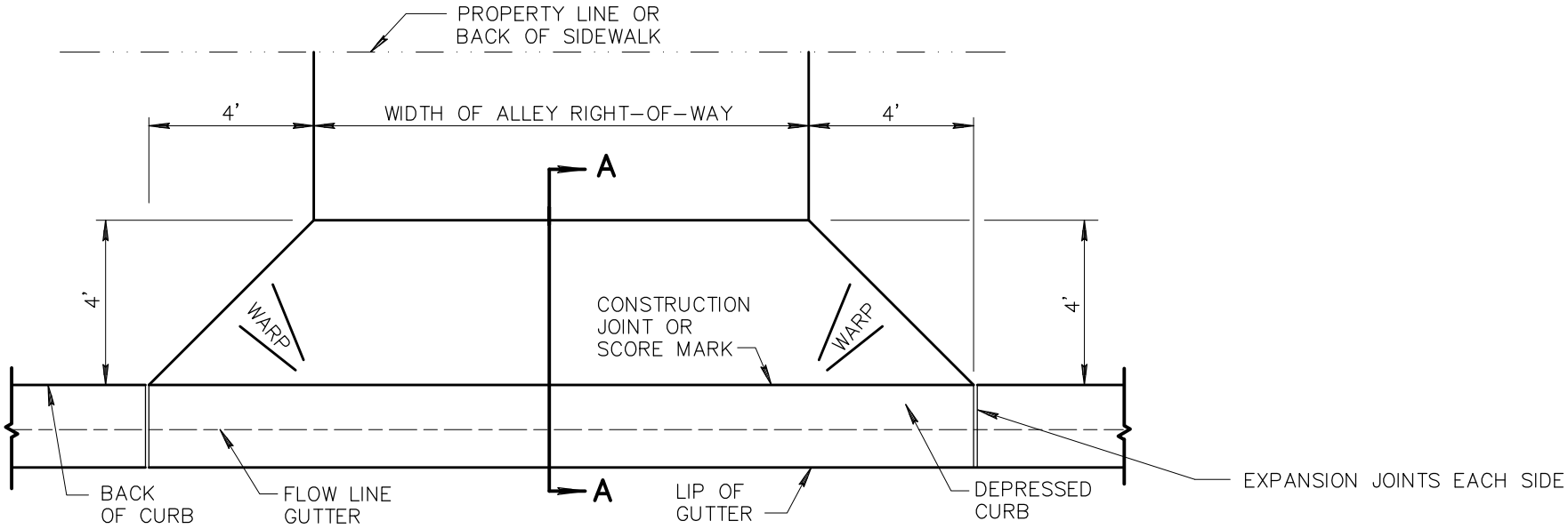

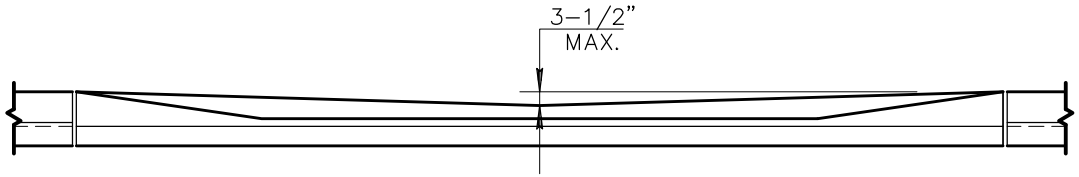

ELEVATION

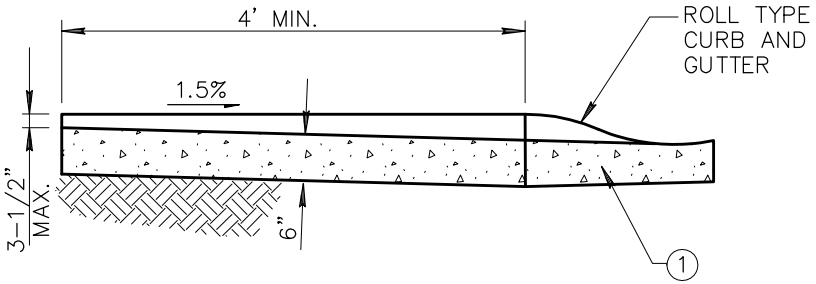

SECTION A-A

NOTES:

1. CLASS 'B' CONCRETE CONSTRUCTION PER SECT. 725.
2. EXPANSION JOINTS SHALL CONFORM TO SECT. 340.
3. SUBGRADE PREPARATION PER SECTION 301.

DETAIL NO.				REVISED	DETAIL NO.
263	MARICOPA ASSOCIATION of GOVERNMENTS	STANDARD DETAIL ENGLISH	WING TYPE ALLEY ENTRANCE (WITH ROLL TYPE CURB AND GUTTER)	01-01-2002	263

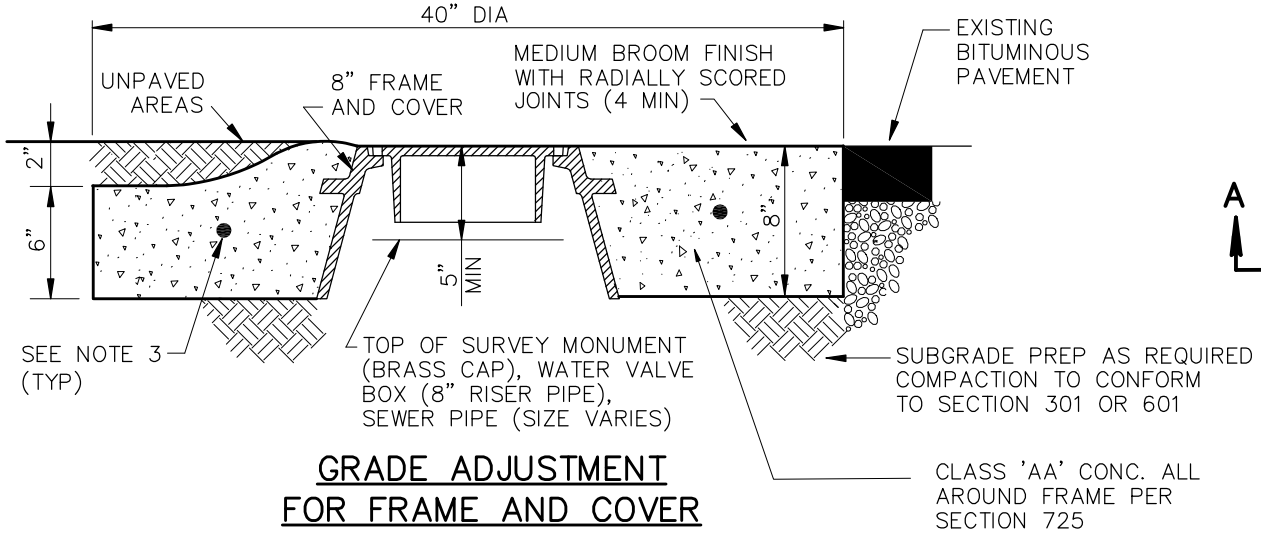

GRADE ADJUSTMENT FOR FRAME AND COVER

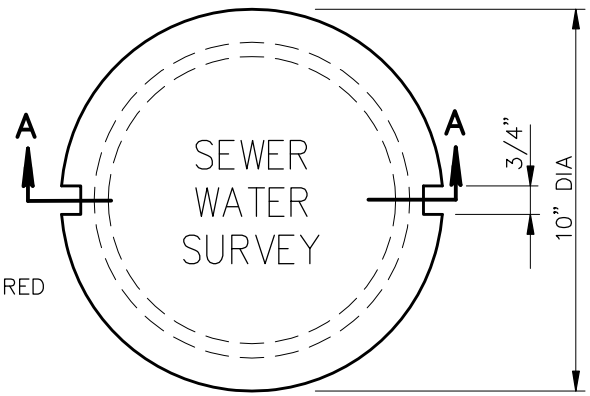

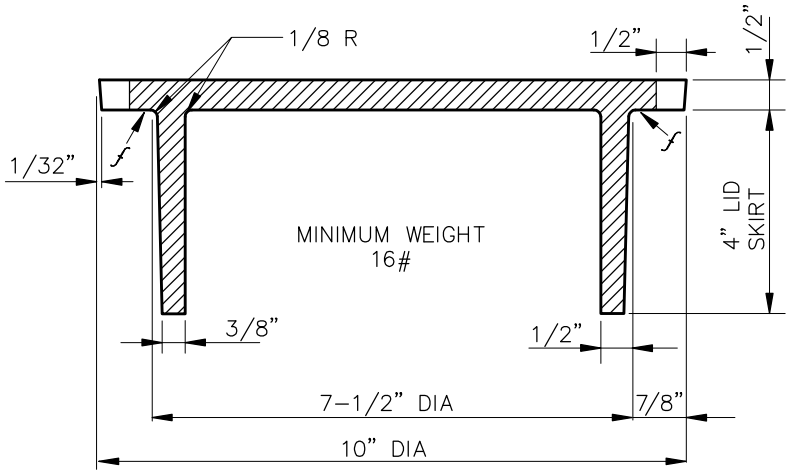

COVER SECTION A-A

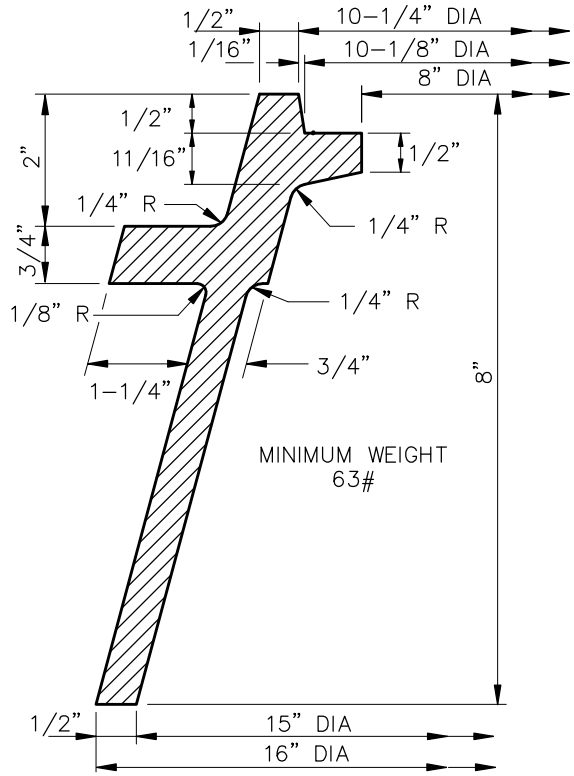

8" C.I. FRAME AND COVER

NOTES:

1. CASTING TO CONFORM TO SECT. 787.
2. LETTERS ON COVER TO BE AS FOLLOWS: "SEWER", "WATER", OR "SURVEY" AS DIRECTED. TOTAL WIDTH OF WORD "SEWER" OR "WATER" 3-3/4", TOTAL WIDTH OF THE WORD "SURVEY" 4-1/2". LETTER SIZE 5/8" X 3/4" , RAISED 1/16" ABOVE THE LEVEL OF THE COVER.
3. #4 REINFORCING STEEL HOOP EQUALLY CENTERED HORIZONTALLY & VERTICALLY.
4. ƒ INDICATES MACHINE FINISHED SURFACE.

DETAIL NO.			REVISED	DETAIL NO.
270	MARICOPA ASSOCIATION of GOVERNMENTS — STANDARD DETAIL ENGLISH	ROUND FRAME AND COVER AND GRADE ADJUSTMENT	01-01-2017	270

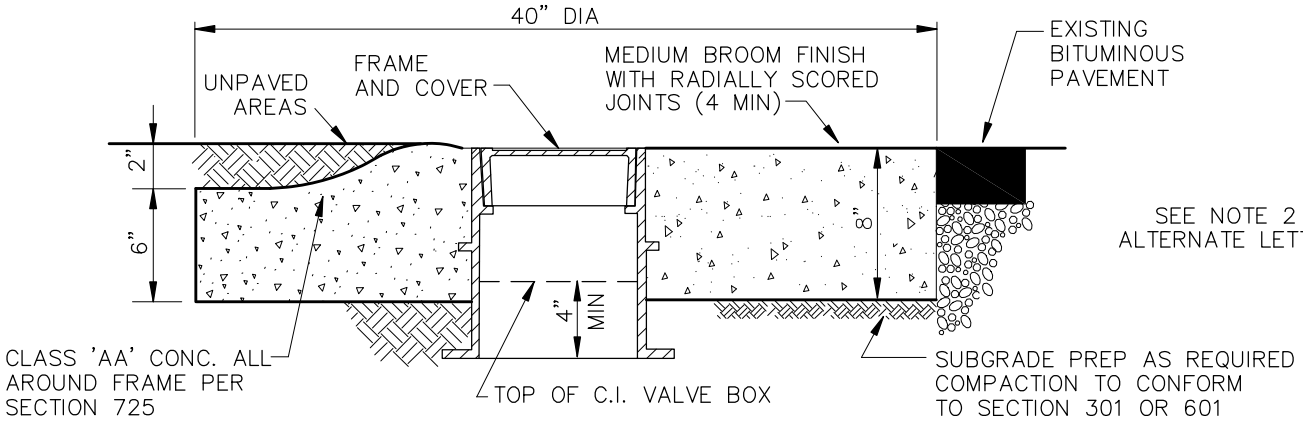

GRADE ADJUSTMENT FOR FRAME AND COVER

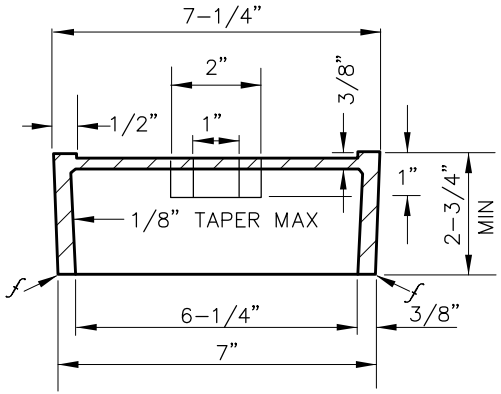

COVER SECTION A–A

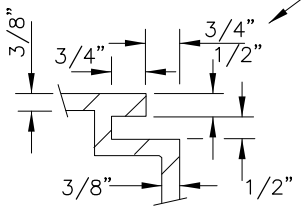

PICK HOLE SECTION

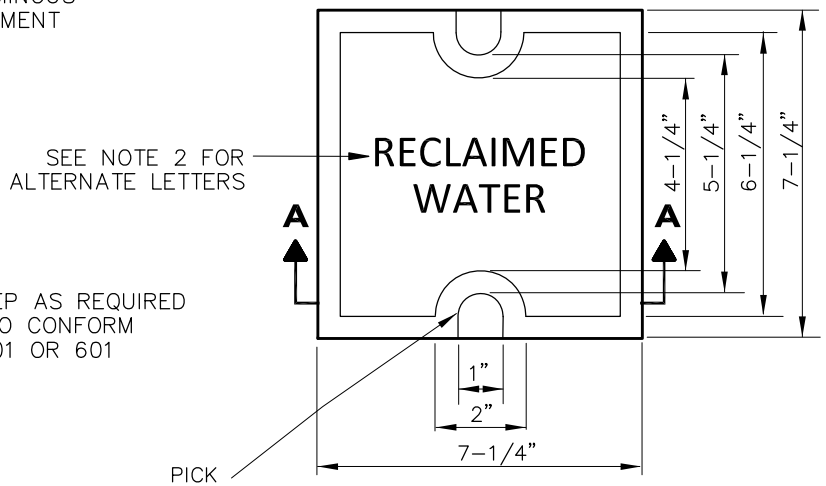

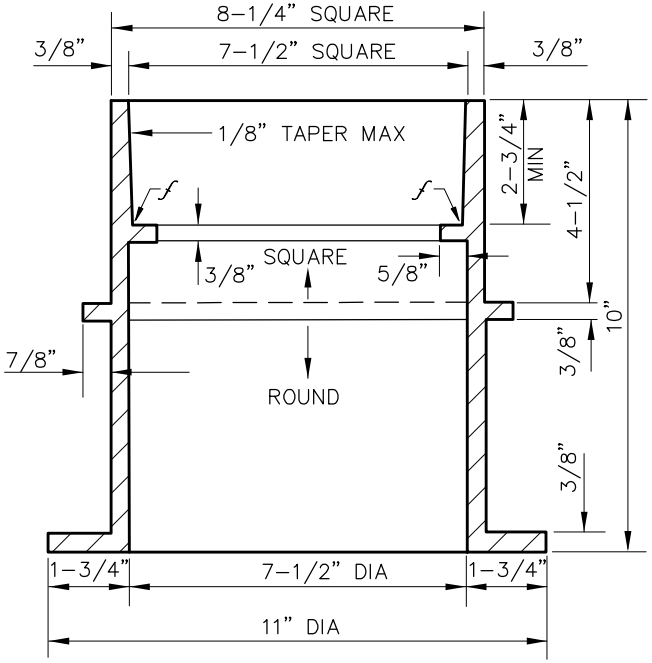

C.I. FRAME AND COVER

NOTES:

1. CASTING TO CONFORM TO SECTION 787.
2. LETTERS ON COVER TO BE AS FOLLOWS, PER AGENCY REQUIREMENTS: 3/4" HIGH "RECLAIMED WATER" OR 1/2" HIGH "NONPOTABLE WATER". LETTERS TO BE RAISED 1/16".
3. *f* INDICATES MACHINE FINISHED SURFACE.
4. VALVE BOX SHALL HAVE A ROUND BOTTOM TO ACCOMMODATE RISER PIPE.

DETAIL NO.				REVISED	DETAIL NO.
271	MARICOPA ASSOCIATION of GOVERNMENTS	STANDARD DETAIL ENGLISH	SQUARE FRAME AND COVER AND GRADE ADJUSTMENT	01-01-2017	271

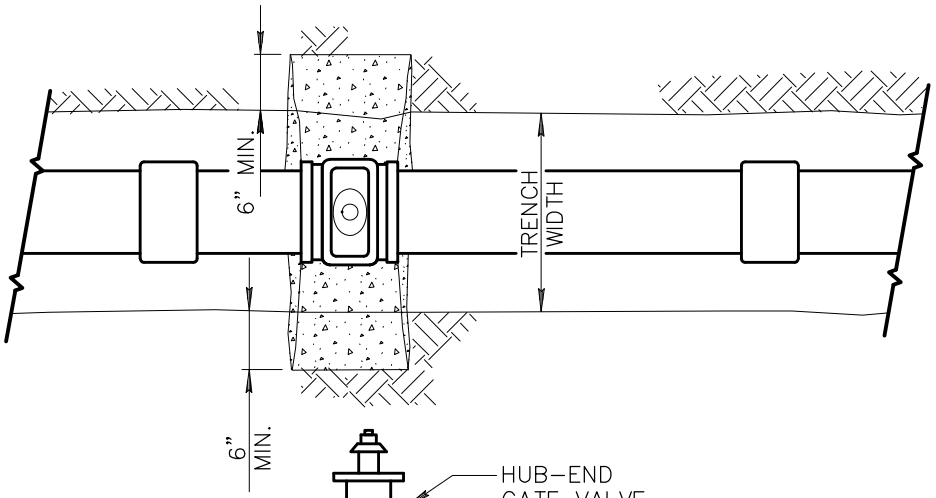

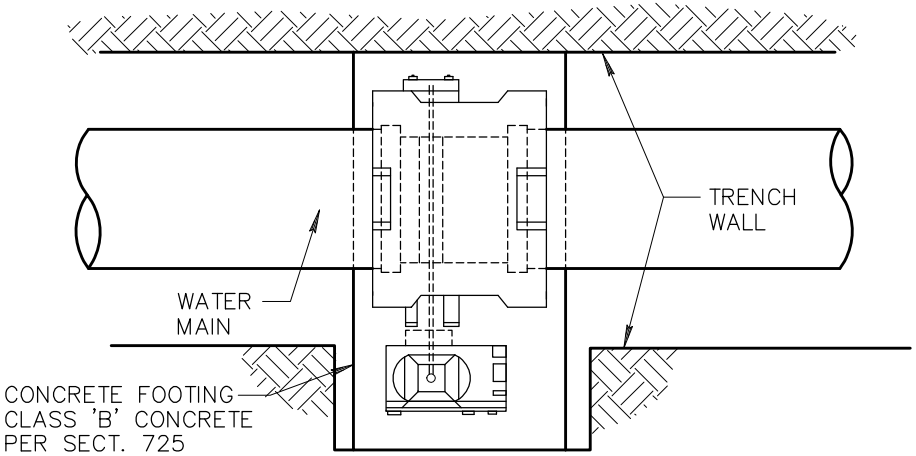

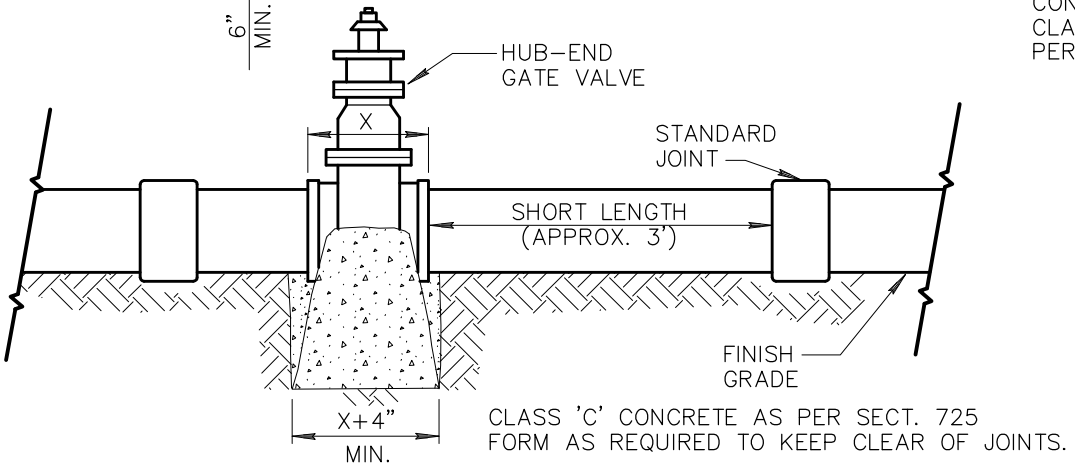

CLASS 'C' CONCRETE AS PER SECT. 725
FORM AS REQUIRED TO KEEP CLEAR OF JOINTS.

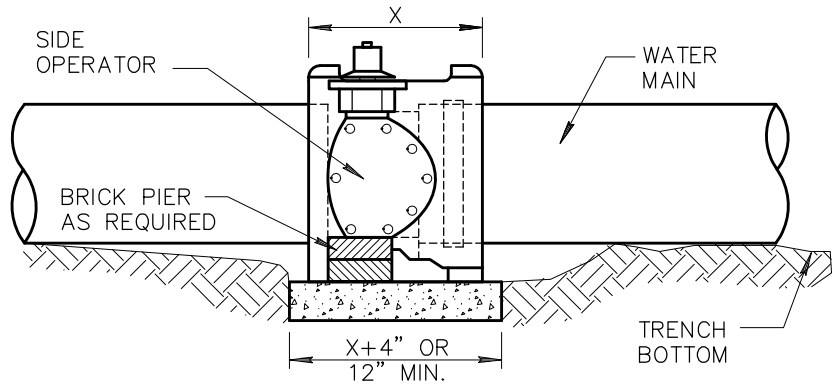

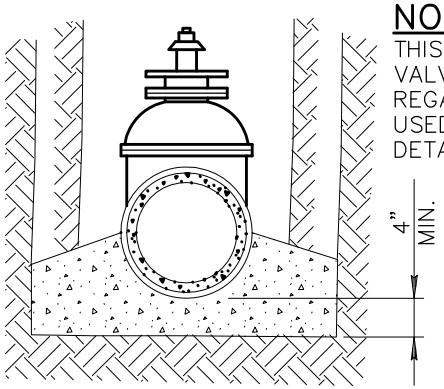

NOTE:

THIS DETAIL COVERS WATER GATE VALVES, 4" TO 12" INCLUSIVE REGARDLESS OF TYPE OF PIPE USED. LARGER LINES TO BE DETAILED ON PLANS.

WATER GATE VALVE

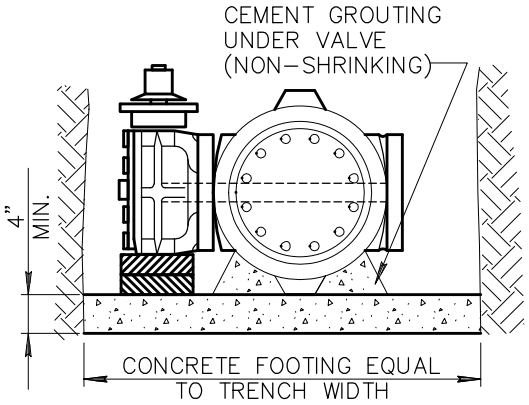

NOTES:

1. THIS DETAIL COVERS BUTTERFLY VALVE INSTALLATION, 3" TO 12" INCLUSIVE, REGARDLESS OF TYPE OF PIPE OR JOINT USED. LARGER LINES TO BE DETAILED ON PLANS.
2. VALVE BOX AND COVER REQUIRED PER DETAILS 270 AND 391.

BUTTERFLY VALVE

DETAIL NO.				REVISED	DETAIL NO.
301	MARICOPA ASSOCIATION of GOVERNMENTS	STANDARD DETAIL ENGLISH	BLOCKING FOR WATER GATE AND BUTTERFLY VALVES	01-01-1998	301

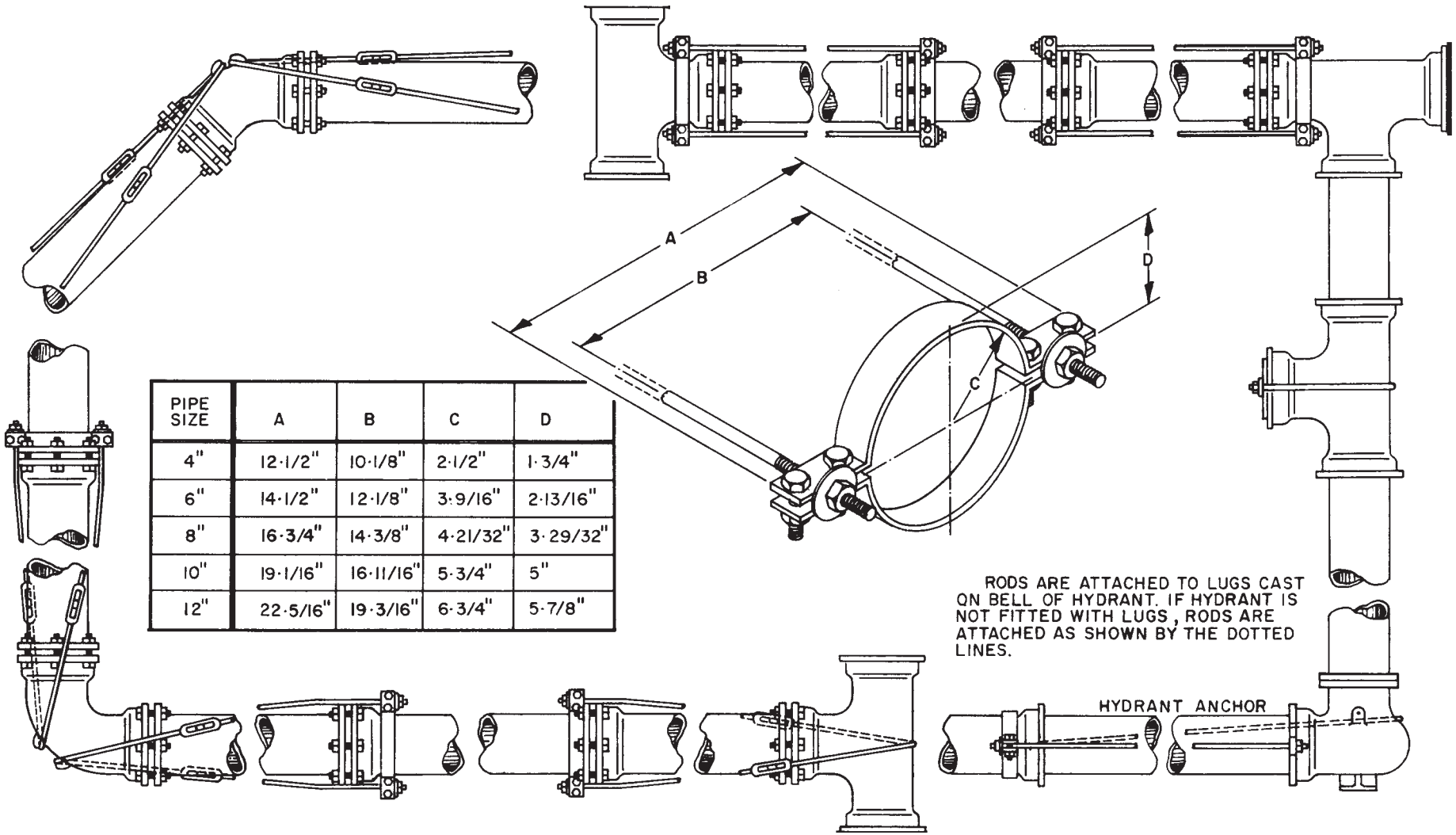

PIPE SIZE	A	B	C	D
4"	12·1/2"	10·1/8"	2·1/2"	1·3/4"
6"	14·1/2"	12·1/8"	3·9/16"	2·13/16"
8"	16·3/4"	14·3/8"	4·21/32"	3·29/32"
10"	19·1/16"	16·11/16"	5·3/4"	5"
12"	22·5/16"	19·3/16"	6·3/4"	5·7/8"

SHEET 1 OF 2

DETAIL NO.				REVISED	DETAIL NO.
302-1	MARICOPA ASSOCIATION of GOVERNMENTS	STANDARD DETAIL ENGLISH	JOINT RESTRAINT WITH TIE RODS	01-01-1998	302-1

THIS DETAIL IS FOR USE ONLY ON UNDERGROUND INSTALLATIONS WHERE THE USE OF CONCRETE THRUST BLOCKING PER DETAIL 380 CANNOT BE USED BECAUSE OF OBSTRUCTIONS, OR REQUIREMENTS OF THE SPECIFICATIONS...

* CLAMPS SHALL BE 1/2 BY 2 INCHES FOR PIPE 4 AND 6 INCHES IN DIAMETER; 5/8 BY 2-1/2 INCHES FOR PIPE 8 AND 10 INCHES; 5/8 BY 3 INCHES FOR PIPE 12 INCHES. BOLT HOLES SHALL BE 1/16 INCH IN DIAMETER LARGER THAN BOLTS.
* RODS SHALL BE 3/4 INCHES IN DIAMETER FOR PIPES 4,6 AND 8 INCHES IN DIAMETER; 7/8 INCHES FOR PIPE 10 INCHES AND 1 INCH IN DIAMETER FOR PIPE 12 INCHES.
* BOLTS SHALL BE 5/8 INCHES IN DIAMTER FOR PIPE 4, 6 AND 8 INCHES IN DIAMETER; 3/4 INCHES FOR PIPE 10 INCHES AND 7/8 INCHES IN DIAMETER FOR PIPE 12 INCHES
* WASHERS MAY BE CAST IRON OR STEEL, ROUND OR SQUARE, DIMENSIONS FOR CAST IRON WASHERS ARE 5/8 BY 3 INCHES FOR PIPE 4, 6, 8 AND 10 INCHES IN DIAMETER AND 3/4 BY 3-1/2 INCHES FOR PIPE 12 INCHES. DIMENSIONS FOR STEEL WASHERS ARE 1/2 BY 3 INCHES FOR PIPE 4, 6, 8 AND 10 INCHES IN DIAMETER AND 1/2 BY 3-1/2 INCHES FOR PIPE 12 INCHES IN DIAMTER. HOLES SHALL BE 1/8 INCH LARGER THAN THE RODS.

FOR PIPE LARGER THAN 12 INCHES IN DIAMETER, RESTRAINT DETAILS SHALL BE SUBMITTED FOR APPROVAL PRIOR TO INSTALLATION.

1. ALL TIE RODS, ROD COUPLINGS, TURNBUCKLES, BOLTS AND NUTS FOR THESE JOINTS SHALL BE OF CARBON STEEL EQUIVALENT TO A.S.T.M. A-307, GRADE B, WITH CADMIUM PLATING IN ACCORDANCE WITH A.S.T.M. A-165. EXCEPT THAT THE MIN. THICKNESS OF THE PLATING SHALL BE .0002 OF AN INCH. CADMIUM PLATED BOLTS SHALL HAVE CLASS 2A THREADS AND THE NUTS, ROD COUPLINGS AND TURNBUCKLES SHALL HAVE 2B THREADS.

2. HIGH STRENGTH, HEAT TREATED CAST IRON TEE-HEAD BOLTS WITH HEXAGON NUTS, ALL IN ACCORDANCE WITH THE STRENGTH REQUIREMENTS OF A.W.W.A. C-111, MAY BE USED IN LIEU OF THE CADMIUM PLATED BOLTS AND NUTS.

3. THE SKETCHES IN THIS SERIES OF FIGURES SHOW ACCEPTABLE METHODS OF PROVIDING ANCHORAGE. THERE IS NO PARTICULAR SIGNIFICANCE TO BE ATTACHED TO WHETHER THE SKETCH SHOWS A BELL AND SPIGOT JOINT OR A STANDARD MECHANICAL JOINT. THE ANCHORING PROCEDURE ILLUSTRATED APPLIES IN MOST CASES TO EITHER TYPE OF JOINT. IN SOME CASES, DIMENSIONS OF THE PARTICULAR PIPE OR HUB AND SPACE AVAILABLE FOR WORKING AROUND THE PARTICULAR JOINT WILL INFLUENCE THE CHOICE OF METHODS USED.

4. IN CERTAIN ASSEMBLIES OF RODS AND CLAMPS SHOWN, RODS RUN FROM A LUG ON THE FITTING (OR A CLAMP BEHIND THE HUB OF A BELL) TO A CLAMP AGAINST A FACE OF A BELL. NOTE THAT THIS ARRANGEMENT ANCHORS ONLY ONE JOINT. THE STABILITY OF THE JOINT WHERE THE CLAMP IS AGAINST THE FACE OF THE BELL DEPENDS ON HAVING SOIL ABOVE A RELATIVELY LONG PIECE OF PIPE ON BOTH SIDES OF THE JOINT. CONSEQUENTLY, IF THE DISTANCE BETWEEN THE FIRST AND SECOND JOINTS IS LESS THAN 12 FEET, THE SECOND JOINT SHOWN SHALL BE ANCHORED BY A CLAMP BEHIND THE HUB OF THE BELL AND RODS TO A CLAMP AT THE FACE OF THE NEXT BELL.

5. COATING TYPE: A.H.D. ASPHALTIC PRIMER 719(A). - ALL EXPOSED METAL.

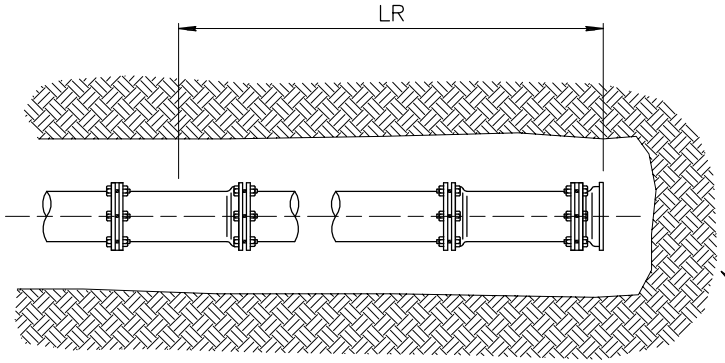

DEAD ENDS

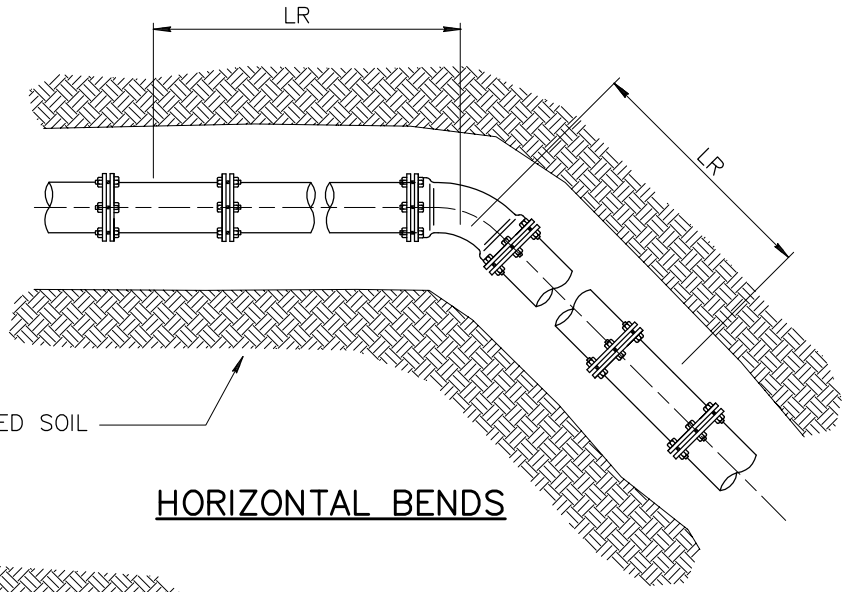

HORIZONTAL BENDS

UNDISTURBED SOIL

LRN = SHORTEST LENGTH OF PIPE RESTRAINED TO THE RUN OF THE TEE FITTING (BOTH SIDES OF TEE).

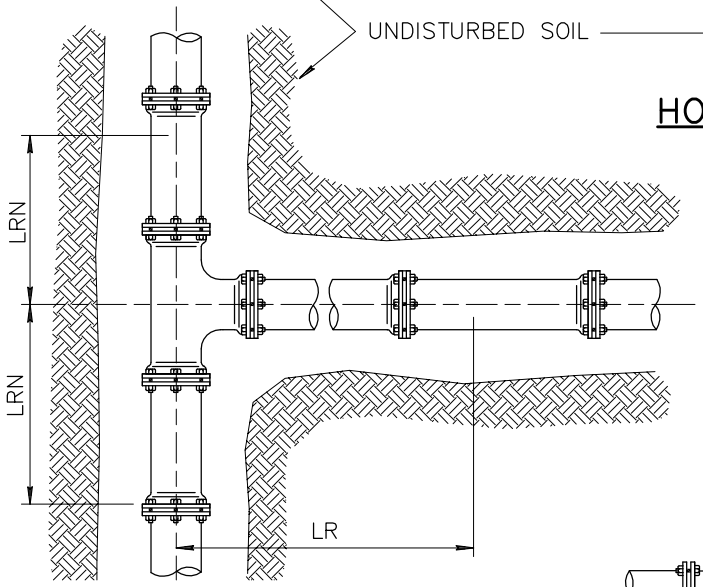

TEES

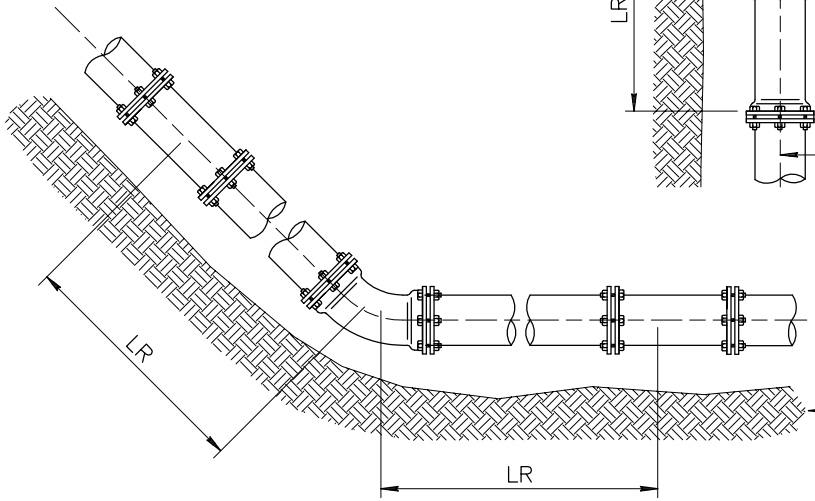

VERTICAL UP BEND

UNDISTURBED SOIL

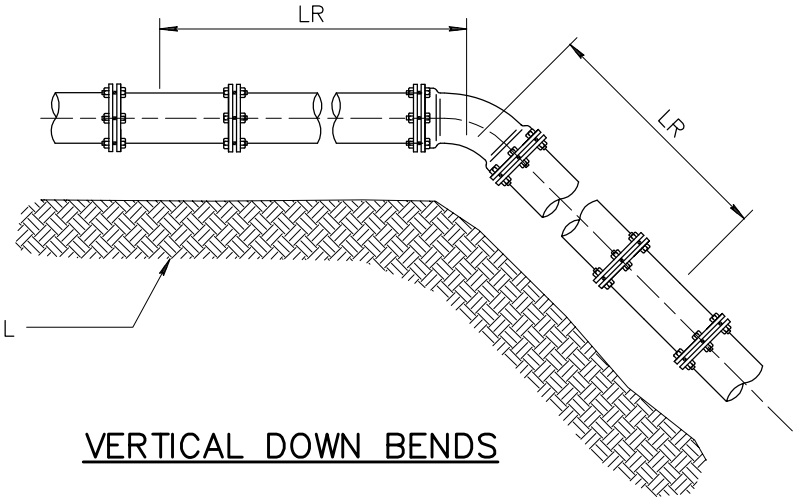

VERTICAL DOWN BENDS

DETAIL NO.		STANDARD DETAIL		REVISED	DETAIL NO.
303–1	MARICOPA ASSOCIATION of GOVERNMENTS	ENGLISH	JOINT RESTRAINT FOR DUCTILE IRON AND POLYETHYLENE WRAPPED DUCTILE IRON WATER PIPES	01–01–1998	303–1

RESTRAINED LENGTHS, LR, FOR DUCTILE IRON PIPE

NOMINAL PIPE SIZE INCHES	HORIZONTAL BENDS			TEES		VERTICAL OFFSETS						DEAD ENDS
						90° BEND FITTINGS		45° BEND FITTINGS		22-1/2° BEND FITTINGS		
	90°	45°	22-1/2°	LRN=0'	LRN=10'	DOWN BEND	UP BEND	DOWN BEND	UP BEND	DOWN BEND	UP BEND	
4	18	7	4	30	8	31	18	13	7	6	3	31
6	25	10	5	43	20	44	25	18	10	9	5	44
8	32	13	6	56	34	58	32	24	13	11	6	58
10	38	16	8	68	45	69	38	29	16	14	8	69
12	45	19	9	80	57	81	45	34	19	16	9	81
14	51	21	10	91	68	92	51	38	21	18	10	92
16	57	24	11	103	79	104	57	43	24	21	11	104
18	62	26	12	113	90	115	62	48	26	23	12	115
20	68	28	14	125	100	126	68	52	28	25	14	126
24	79	33	16	145	121	147	79	61	33	29	16	147

RESTRAINED LENGTHS, LR, FOR DUCTILE IRON PIPE WITH POLYETHYLENE WRAP

NOMINAL PIPE SIZE INCHES	HORIZONTAL BENDS			TEES		VERTICAL OFFSETS						DEAD ENDS
						90° BEND FITTINGS		45° BEND FITTINGS		22-1/2° BEND FITTINGS		
	90°	45°	22-1/2°	LRN=0'	LRN=10'	DOWN BEND	UP BEND	DOWN BEND	UP BEND	DOWN BEND	UP BEND	
4	26	11	5	69	18	72	26	30	11	14	5	72
6	36	15	7	99	47	102	36	42	15	20	7	102
8	47	19	9	130	78	133	47	55	19	26	9	133
10	56	23	11	157	103	159	56	66	23	32	11	159
12	65	27	13	185	131	187	65	77	27	37	13	187
14	74	31	15	211	156	214	74	89	31	42	15	214
16	82	34	16	238	183	241	82	100	34	48	16	241
18	90	37	18	263	207	266	90	110	38	53	18	266
20	98	41	20	289	233	292	98	121	41	58	20	292
24	113	47	22	337	280	340	113	141	47	68	22	340

NOTES:

1. ALL JOINTS WITHIN THE SPECIFIED LENGTH LR MUST BE RESTRAINED. ALL LENGTHS ARE GIVEN IN FEET.
2. THE MAXIMUM TEST PRESSURE SHALL NOT EXCEED 200 PSI
3. THE MINIMUM DEPTH OF BURY SHALL BE 3' TO TOP OF PIPE.
4. RESTRAINED LENGTHS MAY BE REDUCED WHEN SUPPORTED BY ENGINEERING CALCULATIONS.

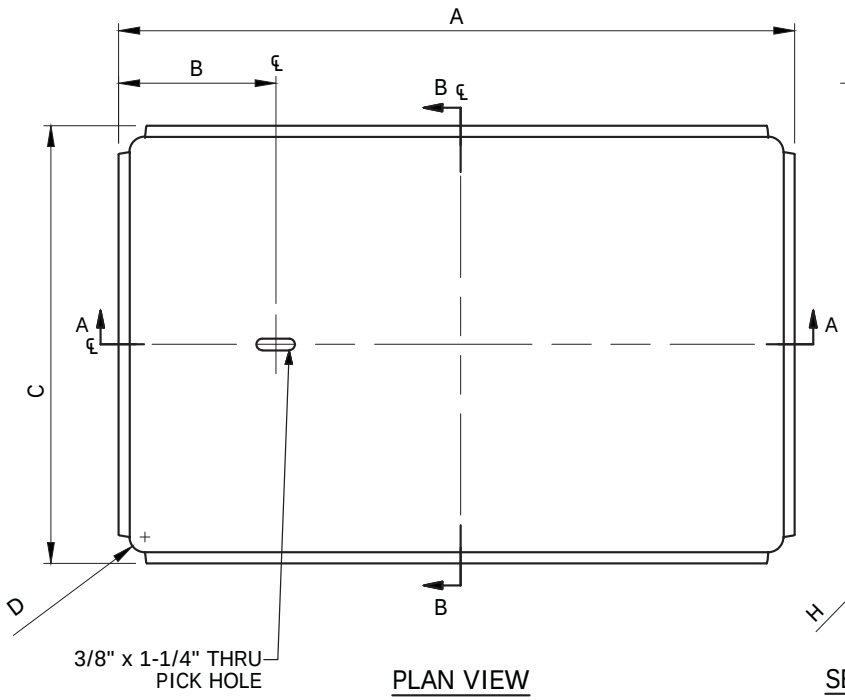

PLAN VIEW

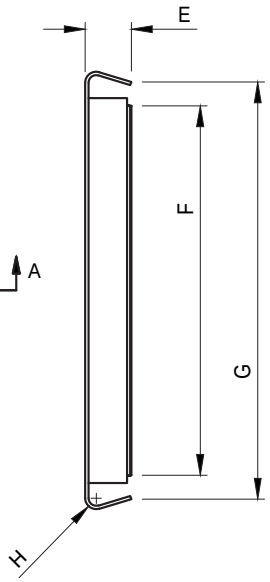

SECTION B-B

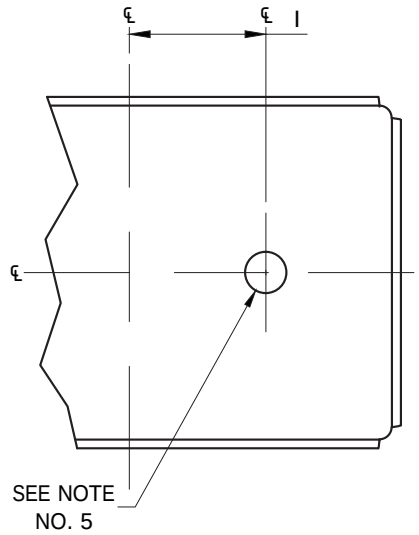

AMR DETAIL OPTION

NOTES:

1. STEEL COVER MATERIAL TO BE PER ASTM A786
2. POTABLE WATER COVER PAINTED BLACK AND RECLAIMED WATER COVER PAINTED PANTONE PURPLE 512. USE OIL BASED PAINT ALKALI RESIN PER SECTION 790
3. DIMENSIONS SHOWN SHALL NOT VARY MORE THAN A 1/16 OF AN INCH
4. ALL COVERS MADE OUT OF DIAMOND CHECKER PLATE
5. STANDARD AUTOMATIC METER READER (AMR) HOLE 2" PER AGENCY OR STANDARD SPECIFICATION
6. REFER TO DETAIL 320 FOR VERTICAL LOAD RATING

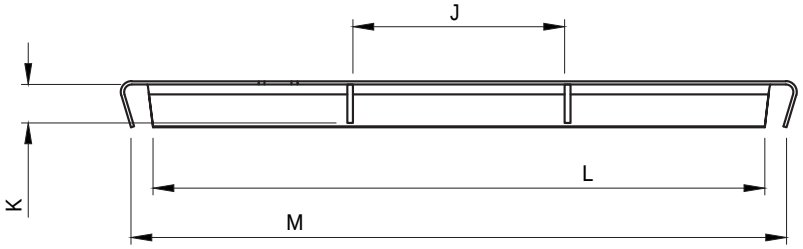

SECTION A-A

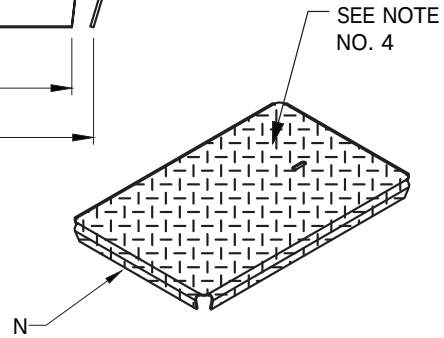

STEEL WATER METER COVER DIMENSIONS				
DIMS	COVER NUMBER			
	1	2	3	4
A	15–3/4"	21–7/8"	26"	30–3/8"
B	3–7/8"	4–1/2"	2–1/8"	4–5/8"
C	9"	14"	15"	19–1/2"
D	1/2"	1/2"	1/2"	1/2"
E	1–1/2"	1–1/2"	2–1/4"	1–1/2"
F	7–1/8"	12"	13"	17–3/4"
G	8–1/4"	13–12"	14–1/8"	19–1/4"
H	1/8"	1/4"	1/8"	1/4"
I	3–3/4"	6–5/8"	9"	12–1/4"
J	NA	6–7/8"	8–1/2"	7–3/8"
K	NA	1–1/4"	1–1/4"	1–1/4"
L	13–7/8"	19–7/8"	24"	28–1/8"
M	15"	21–1/4"	25–1/8"	29–3/4"
N	14 GAUGE	12 GAUGE	12 GAUGE	12 GAUGE

DETAIL NO.				REVISED	DETAIL NO.
310	MARICOPA ASSOCIATION of GOVERNMENTS	STANDARD DETAIL ENGLISH	STEEL WATER METER BOX COVER	01–01–2017	310

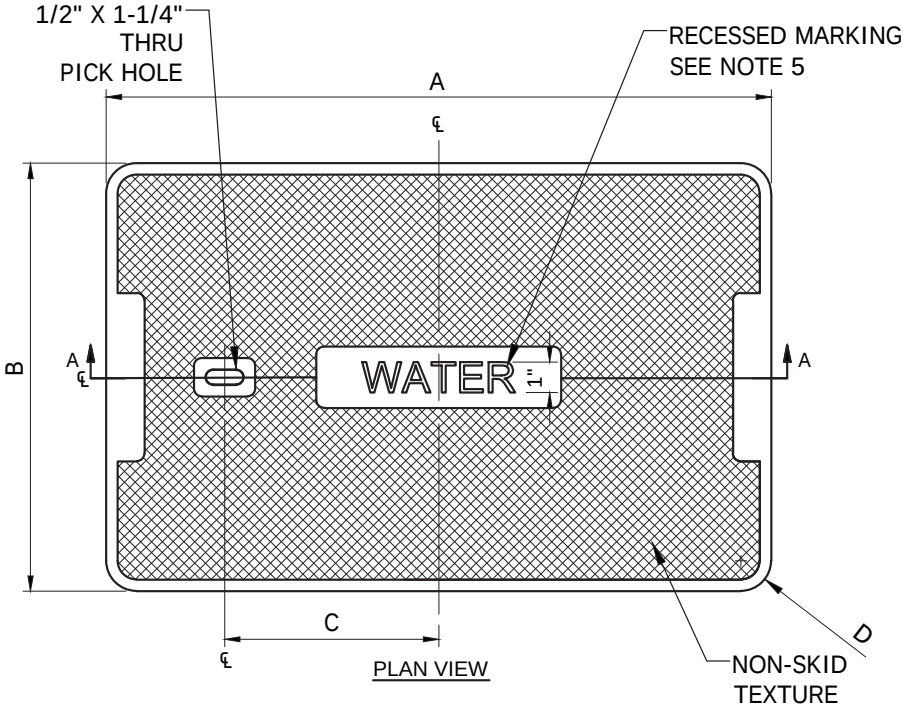

PLAN VIEW

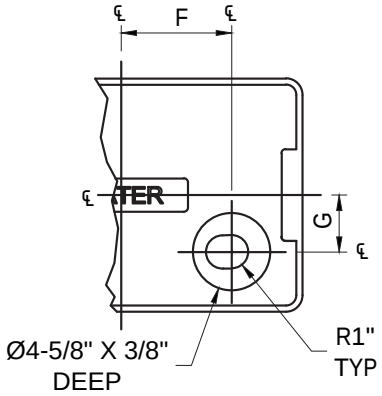

SLOTTED AMR
DETAIL OPTION

NOTES:

1. POTABLE WATER COVER TINTED GRAY AND RECLAIMED WATER COVER TINTED PANTONE PURPLE 512
2. DIMENSIONS SHOWN SHALL NOT VARY MORE THAN A 1/16 OF AN INCH
3. ACCEPTABLE ALTERNATIVES INCLUDE "SHEET MOLDED COMPOUND" (SMC), AND "BULK MOLDED COMPOUND" (BMC). PLASTICS ARE NOT ACCEPTABLE MATERIALS
4. SLOTTED AUTOMATIC METER READING (AMR) HOLE PER AGENCY OR STANDARD SPECIFICATION
5. MARKING PER AGENCY AND/OR UTILITY
6. REFER TO DETAIL 320 FOR VERTICAL LOAD RATING

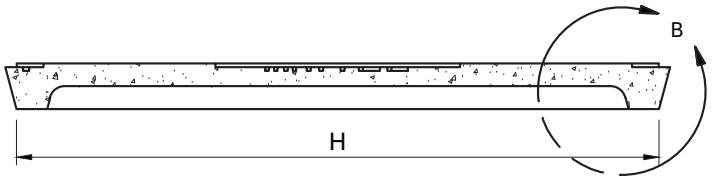

SECTION A-A

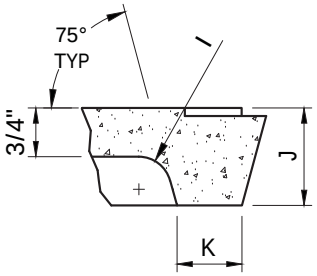

DETAIL B

POLYMER CONCRETE COVER DIMENSIONS				
DIMS	COVER NUMBER			
	1	2	3	4
A	15–3/4"	21–7/8"	26"	30–3/8"
B	9"	14"	15"	19–1/2"
C	5"	7"	9"	10"
D	3/4"	1"	3/8"	3/8"
E	8–1/2"	13–1/4"	14–1/8"	19"
F	4–3/8"	6–5/8"	8"	10–3/4"
G	3/4"	3–3/8"	3–3/4"	6–1/4"
H	15–3/8"	21"	25–1/8"	29–1/2"
I	3/8"	1/2"	1"	1/4"
J	1–1/2"	1–1/2"	2–1/4"	1–1/2"
K	3/4"	1"	1"	1"

DETAIL NO.				REVISED	DETAIL NO.
315	MARICOPA ASSOCIATION of GOVERNMENTS	STANDARD DETAIL ENGLISH	POLYMER CONCRETE WATER METER BOX COVER	01–01–2017	315

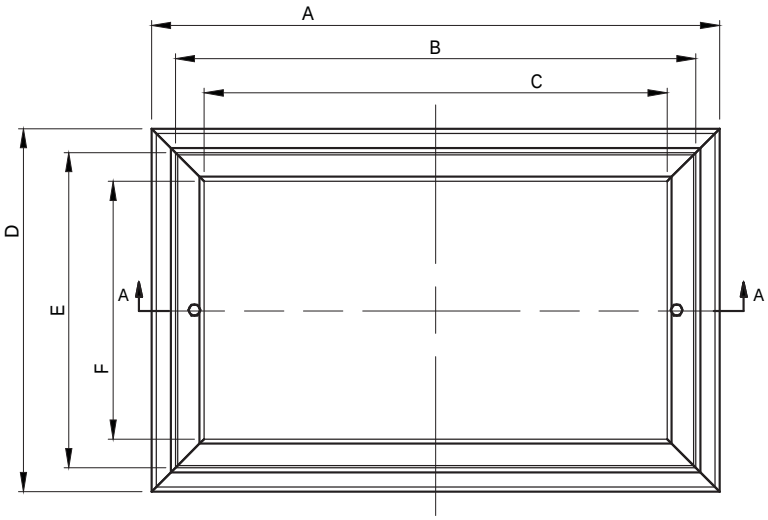

BOX ONLY - TOP VIEW

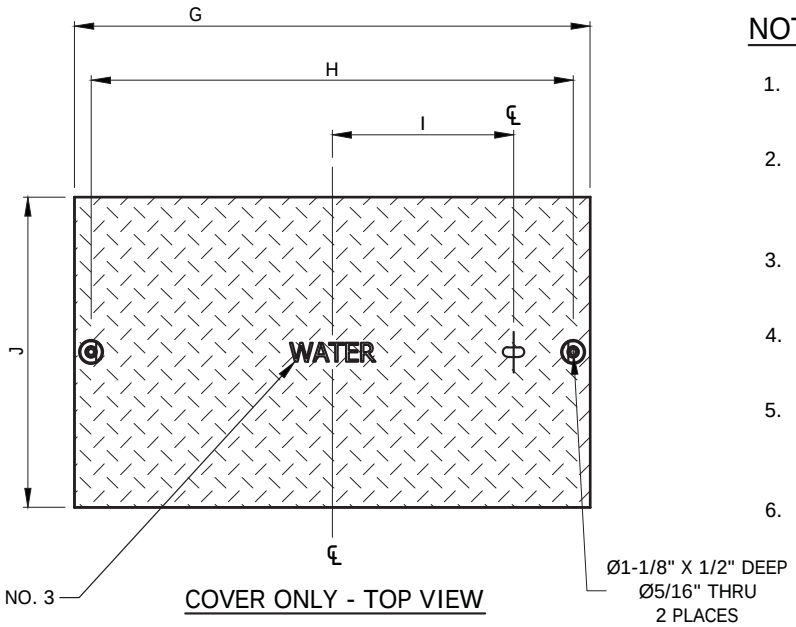

COVER ONLY - TOP VIEW

NOTES:

1. COVER AND BOX COMBINATION SHALL MEET AASHTO H20
2. DIMENSIONS SHOWN SHALL NOT VARY MORE THAN A 1/16 OF AN INCH
3. MARKINGS PER AGENCY AND/OR UTILITY
4. STACKABLE EXTENSION AVAILABLE TO ACHIEVE DEPTH DESIRED
5. GROUND BELOW THE BOX TO BE COMPACTED TO 95% MAXIMUM DENSITY
6. 6" CONCRETE COLLAR IF REQUIRED BY AGENCY

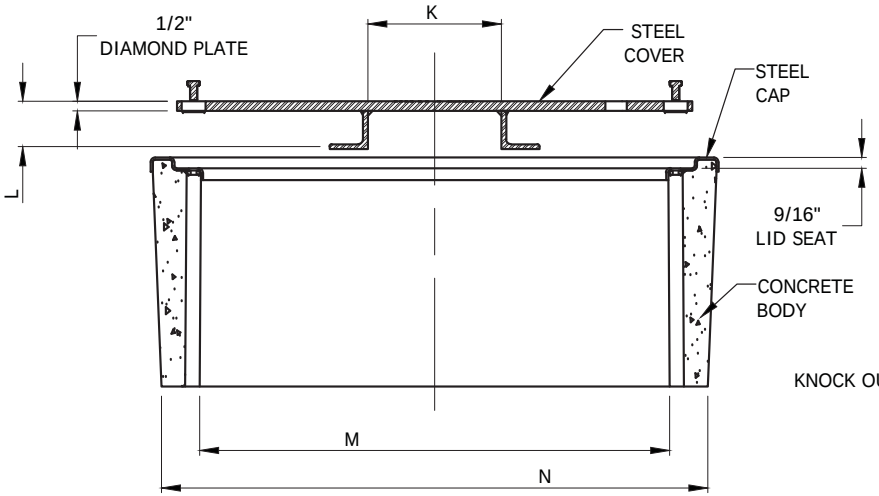

SECTION A-A BODY AND COVER

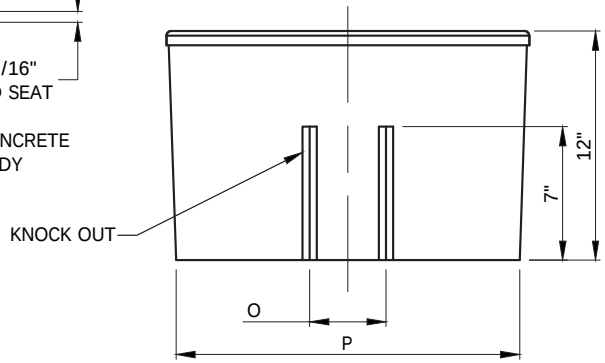

END VIEW

TRAFFIC BOX DIMENSIONS		
DIMS	BOX NUMBER	
	(1324)	(1730)
A	29–3/4"	36–7/8"
B	27–1/4"	33–1/2"
C	24–1/4"	30"
D	19"	23–3/4"
E	16–1/2"	20–1/2"
F	13–1/2"	17"
G	27"	33–1/4"
H	25–1/4"	31–1/4"
I	9–1/2"	12–1/8"
J	16–1/4"	20–1/4"
K	7"	10–3/4"
L	2–1/2"	3–1/2"
M	24–5/8"	30–5/8"
N	28–5/8"	35–7/8"
O	4"	5–3/4"
P	18"	22–5/8"

DETAIL NO.				REVISED	DETAIL NO.
319	MARICOPA ASSOCIATION of GOVERNMENTS	STANDARD DETAIL ENGLISH	TRAFFIC RATED BOX AND COVER	01–01–2017	319

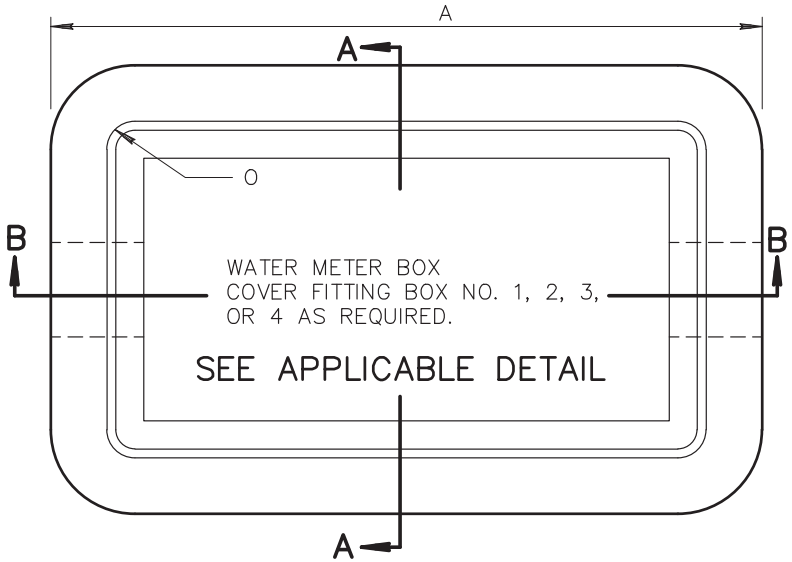

PLAN VIEW

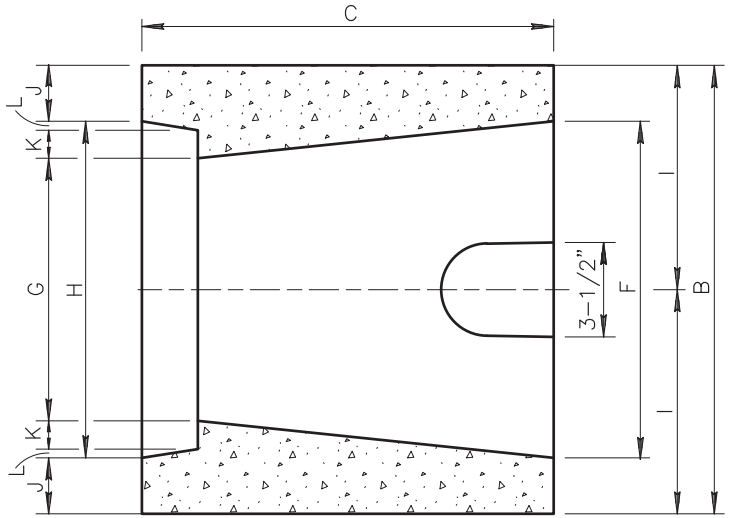

SECTION A–A

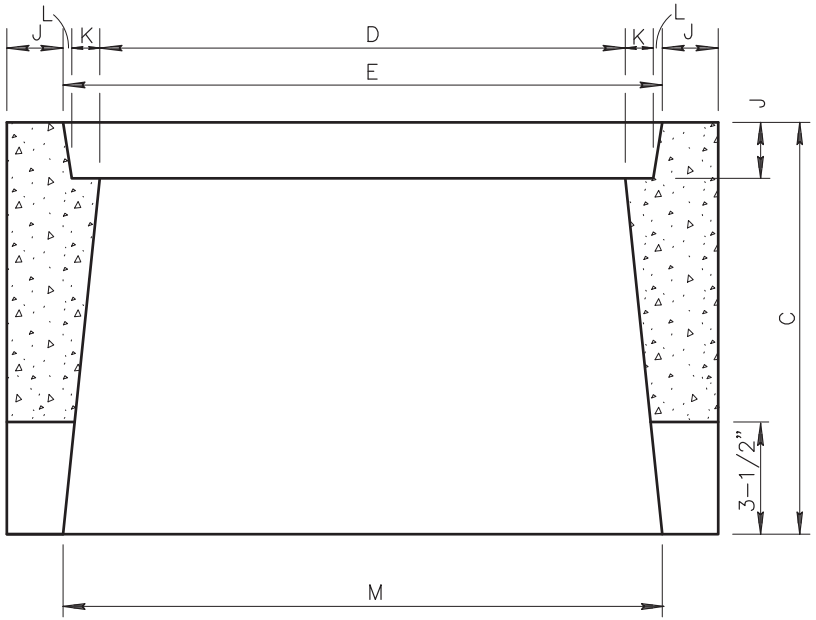

SECTION B–B

NOTES:

1. THE METER BOXES SHALL CONFORM TO DIMENSIONS AS SHOWN AND SHALL NOT VARY MORE THAN A 1/16 OF AN INCH
2. THE METER BOXES SHALL BE MADE OF CLASS 'AA' CONCRETE PER SECT. 725. ACCEPTABLE ALTERNATIVE MATERIALS INCLUDE "POLYMER CONCRETE", "SHEET MOLDED COMPOUND" (SMC), "BULK MOLDED COMPOUND" (BMC), AND POLYETHYLENE WITH POLYMER CONCRETE FRAME
3. MINIMUM VERTICAL LOAD RATING PER TIER 5 ANSI/SCTE77 TESTING STANDARD FOR GRADE LEVEL ENCLOSURES AND COVERS
4. FOR LOAD REQUIREMENTS ABOVE 5,000 POUNDS USE DETAIL 319, TRAFFIC RATED BOX AND COVER

METER BOX DIMENSIONS

DIMS	BOX NUMBER			
	1	2	3	4
A	18–1/2"	25"	28–3/8"	33–1/8"
B	11–3/4"	17–1/4"	17–5/8"	22–3/8"
C	12"	12"	12"	12"
D	14"	20"	24"	27–3/4"
E	16"	22–1/8"	26–1/4"	30–5/8"
F	9–1/4"	14–1/2"	15–1/8"	19–3/4"
G	7"	12–1/2"	13"	17"
H	9–1/4"	14–1/4"	15–1/4"	19–3/4"
I	5–7/8"	8–5/8"	8–7/8"	11–1/8"
J	1–1/2"	1–1/2"	2–1/4"	1–1/2"
K	3/4"	1/2"	3/4"	5/8"
L	1/4"	1/2"	1/2"	5/8"
M	16"	21–7/8"	26"	30–1/2"
O	1/2"	1/2"	1/2"	5/8"
	5/8" OR 3/4" METER	1" METER	1–1/2" METER	2" METER

DETAIL NO.				REVISED	DETAIL NO.
320	MARICOPA ASSOCIATION of GOVERNMENTS	STANDARD DETAIL ENGLISH	NON TRAFFIC RATED WATER METER BOXES	01–01–2017	320

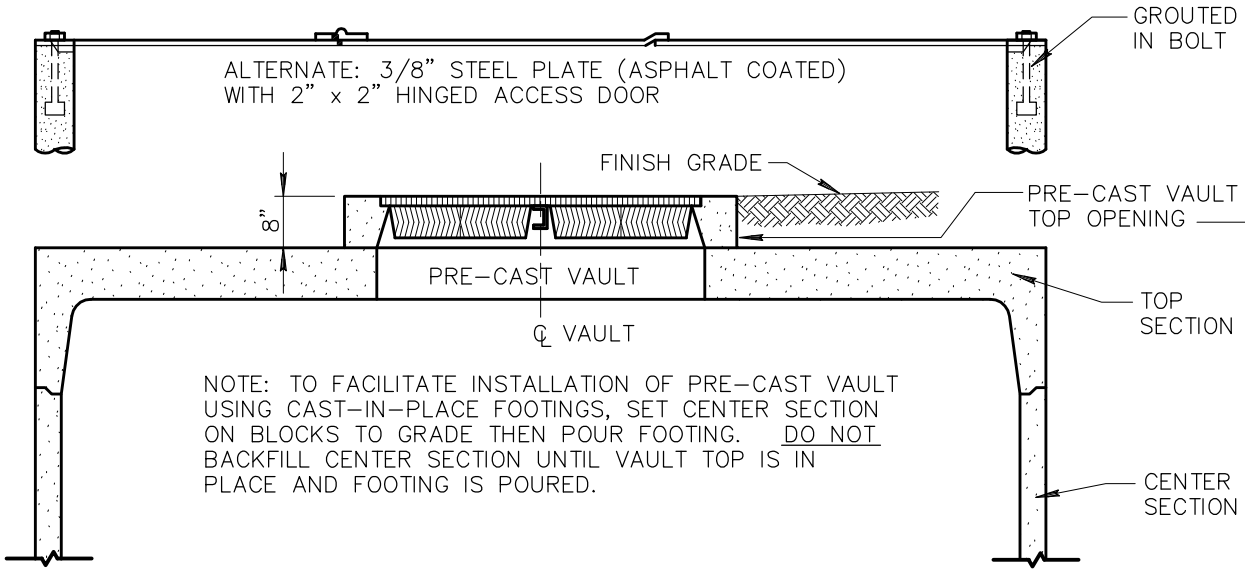

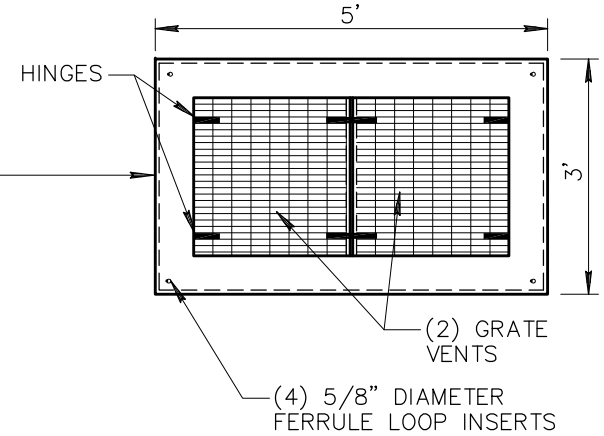

PRE-CAST VAULT SECTION

NOTE: PRECAST REINFORCED VAULT SECTIONS SHALL BE CONSTRUCTED IN ACCORDANCE WITH MANUFACTURER'S SPECIFICATIONS AND DETAILS AS APPROVED BY ENGINEER.

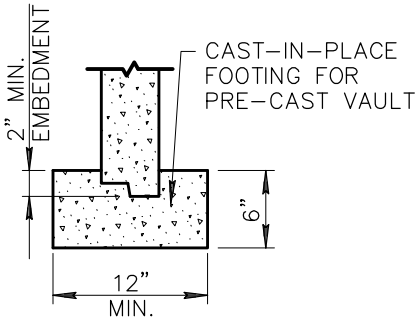

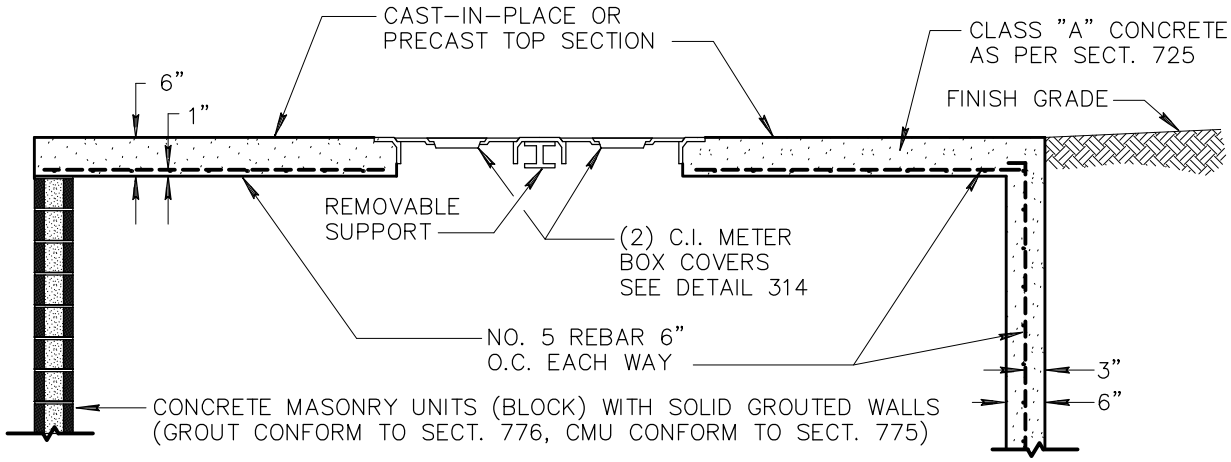

BLOCK MASONRY MAY BE USED IN LIEU OF CAST-IN-PLACE VAULT WALLS, NO. 4 REBAR IN EVERY OTHER CORE.

CAST-IN-PLACE VAULT SECTION

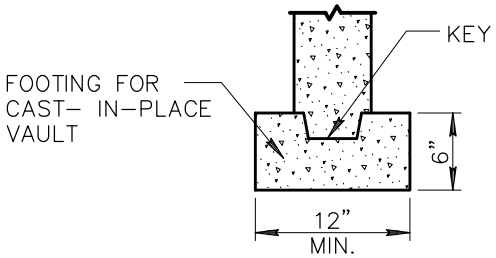

DETAIL NO.				REVISED	DETAIL NO.
321	MARICOPA ASSOCIATION of GOVERNMENTS	STANDARD DETAIL ENGLISH	STANDARD WATER METER VAULT	01-01-1998	321

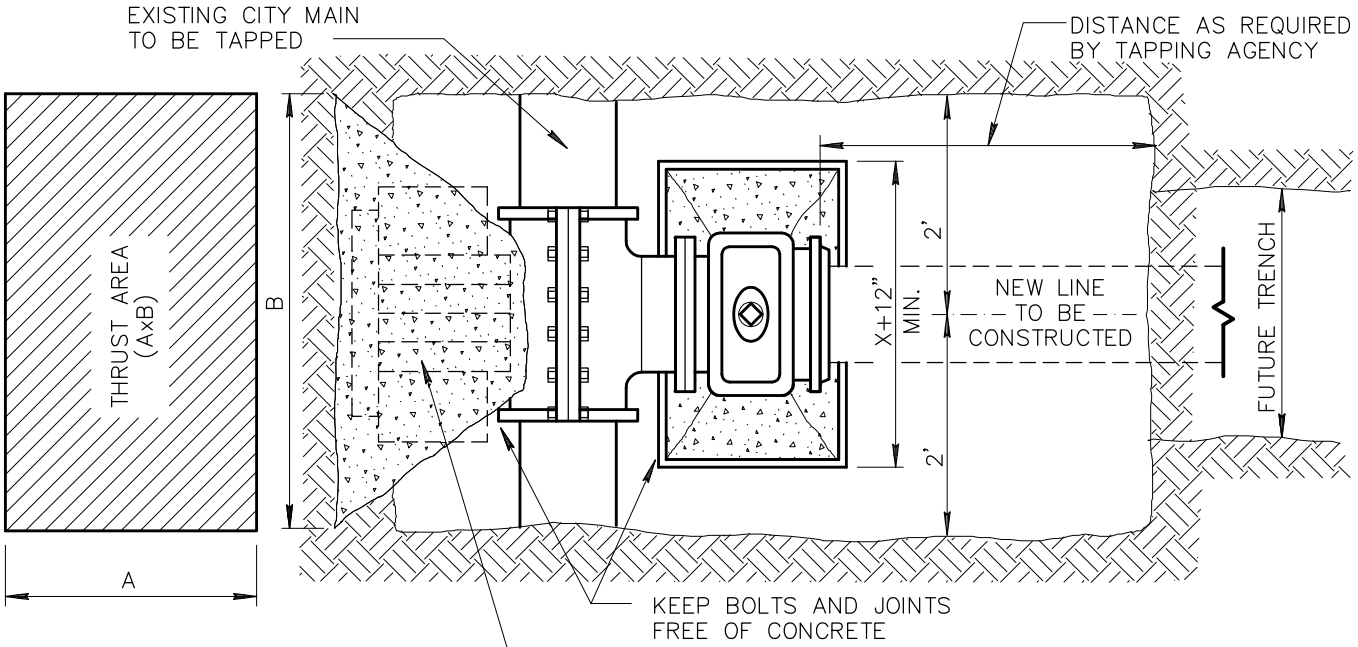

PLAN

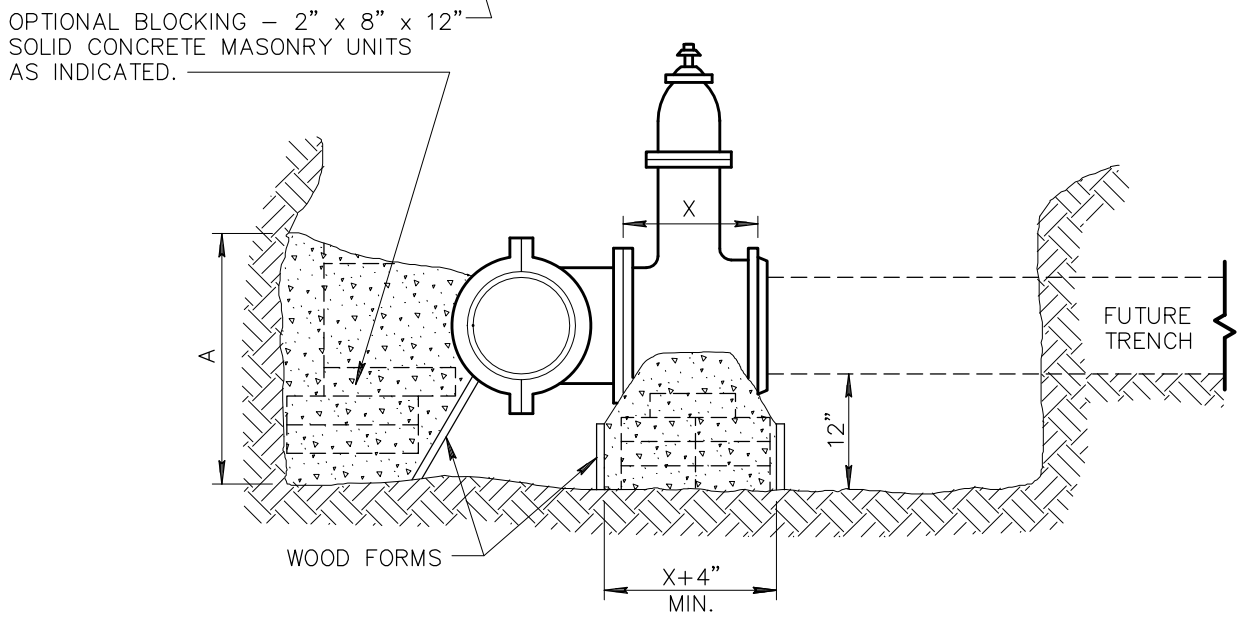

ELEVATION

NOTES:

1. TAPPING SLEEVE TO BE PLACED A MINIMUM OF 18" FROM ANY BELL COUPLING, VALVE, FITTING OR OTHER OBSTRUCTION
2. CONTRACTOR SHALL EXCAVATE AS SHOWN AND SHALL SET TAPPING SLEEVE AND VALVE AND TIGHTEN ALL BOLTS PRIOR TO THE PRESSURE TEST.
3. ALL TAPPING SLEEVES AND VALVES MUST BE PRESSURE TESTED PRIOR TO BLOCKING OR TAPPING. THE TEST MUST BE WITNESSED AND APPROVED BY THE INSPECTOR.
4. BLOCKS ARE TO EXTEND TO UNDISTURBED GROUND AND BE INSTALLED BEFORE THE TAP IS MADE. ALL FLANGE BOLTS SHALL BE FREE AND CLEAR OF CONCRETE.
5. CONCRETE THRUST BLOCKS SHALL BE CLASS 'B' PER SECT. 725. NORMALLY, CURE TIME FOR CONCRETE IS 24 HOURS BEFORE BACKFILLING.
6. TAPS SHALL BE MADE BY CITY CREWS AT PREVAILING RATES OR BY APPROVED CONTRACTORS WHEN ALLOWED BY AGENCY.
7. THIS DETAIL COVERS TAPPING SLEEVES 4" THROUGH 16" IN SIZE ON DUCTILE IRON, CAST IRON AND ASBESTOS CEMENT PIPE. ANY OTHER SIZE OR TYPE OF PIPE WILL REQUIRE A SEPARATE SUBMITTAL AND APPROVAL BY THE ENGINEER.

SIZE OF PIPE BEING CONNECTED	MINIMUM THRUST AREA REQUIRED EQUALS (AxB) (SQUARE FEET)
4" AND LESS	3
6"	4
8"	6
10"	9
12"	13
16"	23

DETAIL NO.				REVISED	DETAIL NO.
340	MARICOPA ASSOCIATION of GOVERNMENTS	STANDARD DETAIL ENGLISH	INSTALLING TAPPING SLEEVES AND VALVES	01-03-2002	340

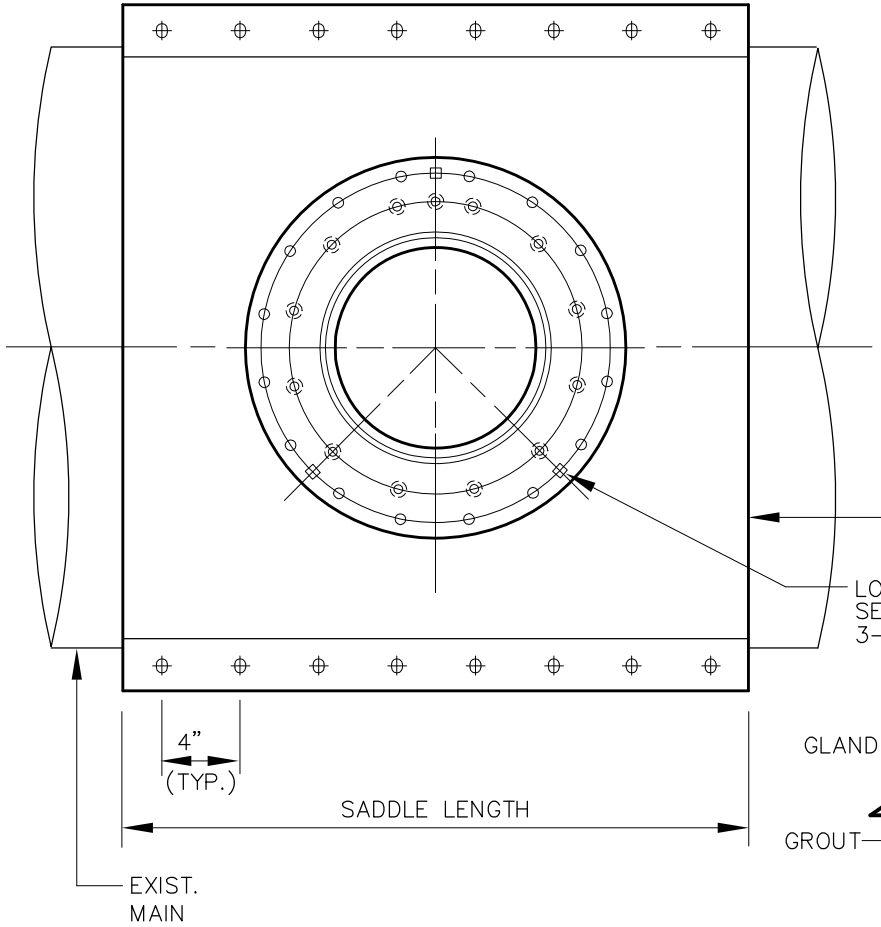

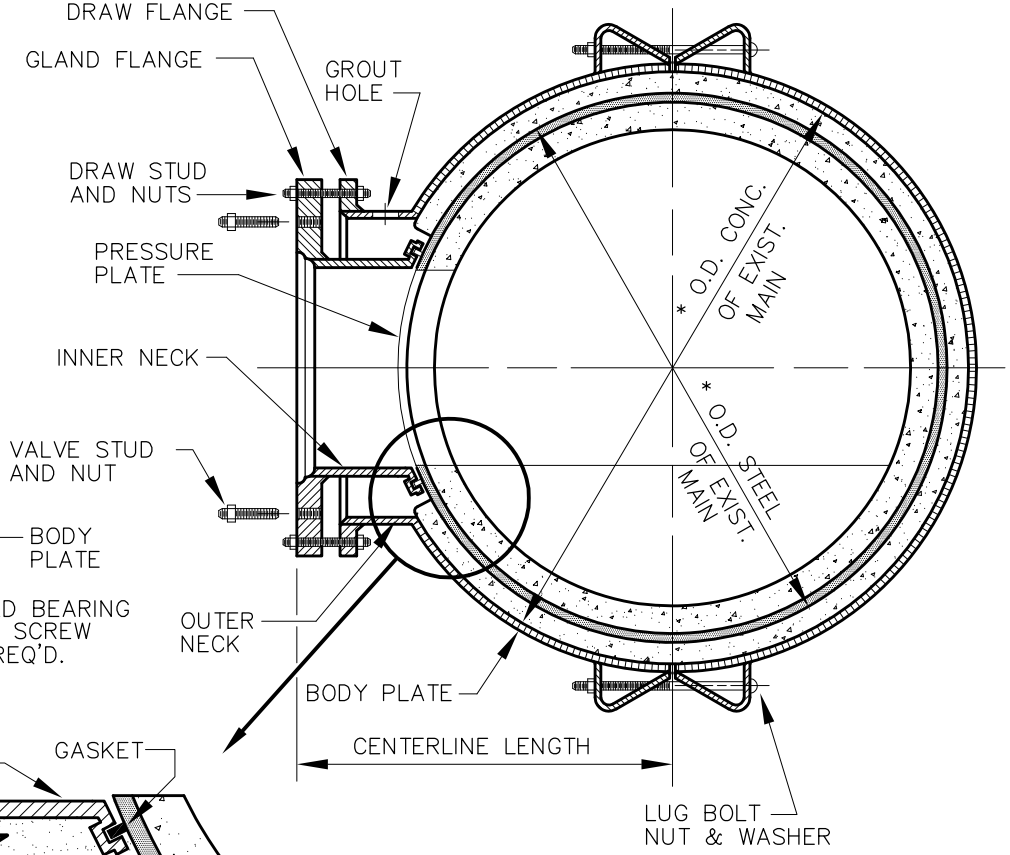

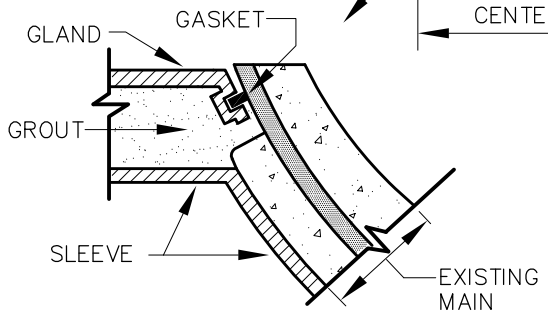

* DIMENSIONS TO BE FIELD VERIFIED

DETAIL NO.				REVISED	DETAIL NO.
342	MARICOPA ASSOCIATION of GOVERNMENTS	STANDARD DETAIL ENGLISH	CONCRETE PRESSURE PIPE TAPPING SLEEVE	01-01-1998	342

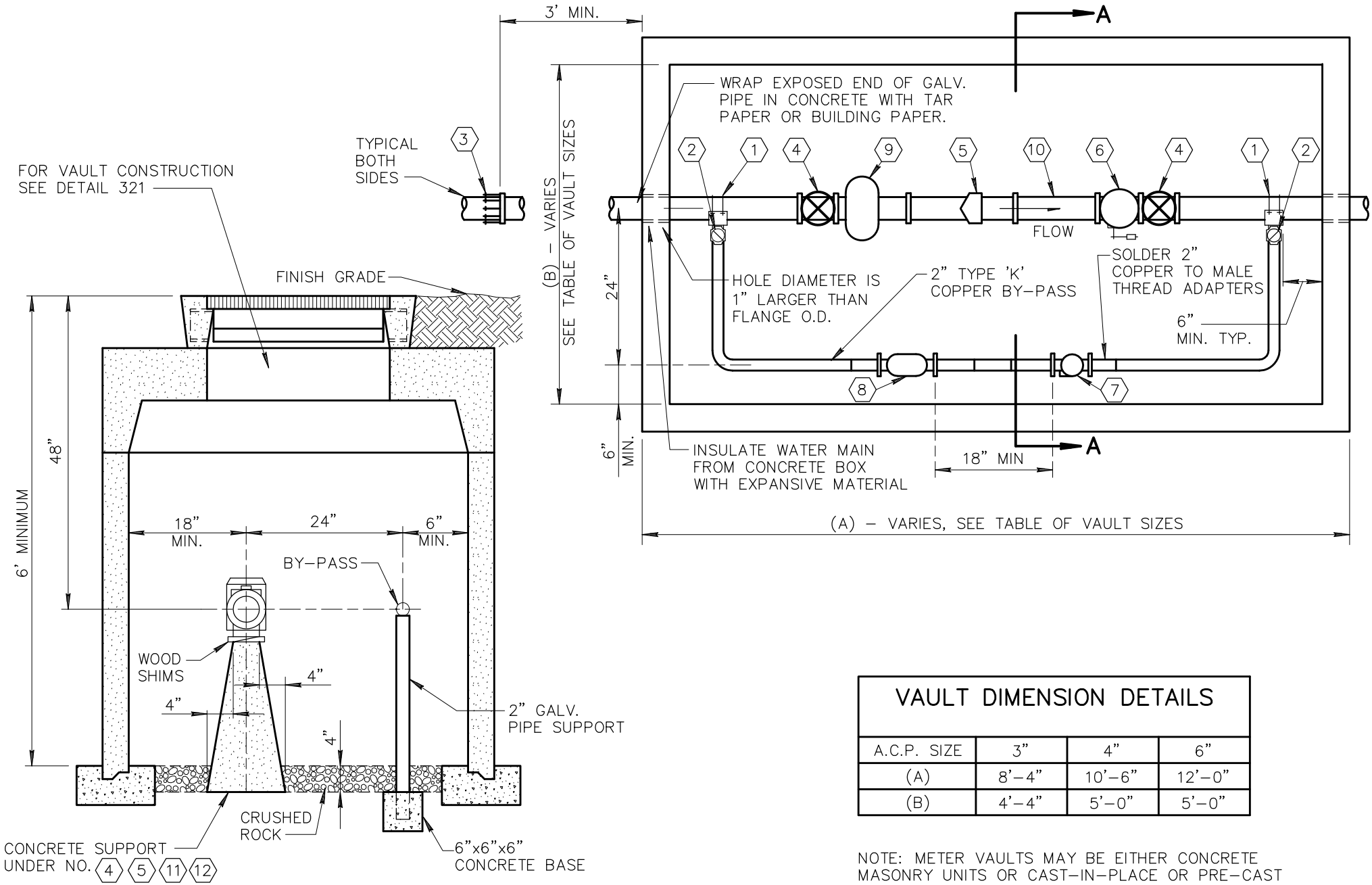

SECTION A–A

VAULT DIMENSION DETAILS

A.C.P. SIZE	3"	4"	6"
(A)	8'–4"	10'–6"	12'–0"
(B)	4'–4"	5'–0"	5'–0"

NOTE: METER VAULTS MAY BE EITHER CONCRETE MASONRY UNITS OR CAST–IN–PLACE OR PRE–CAST CONCRETE, SEE DETAIL 321 FOR VAULT CONSTRUCTION.

DETAIL NO.		STANDARD DETAIL		REVISED	DETAIL NO.
345–1	MARICOPA ASSOCIATION of GOVERNMENTS	ENGLISH	3", 4", 6" WATER METER	01–01–1998	345–1

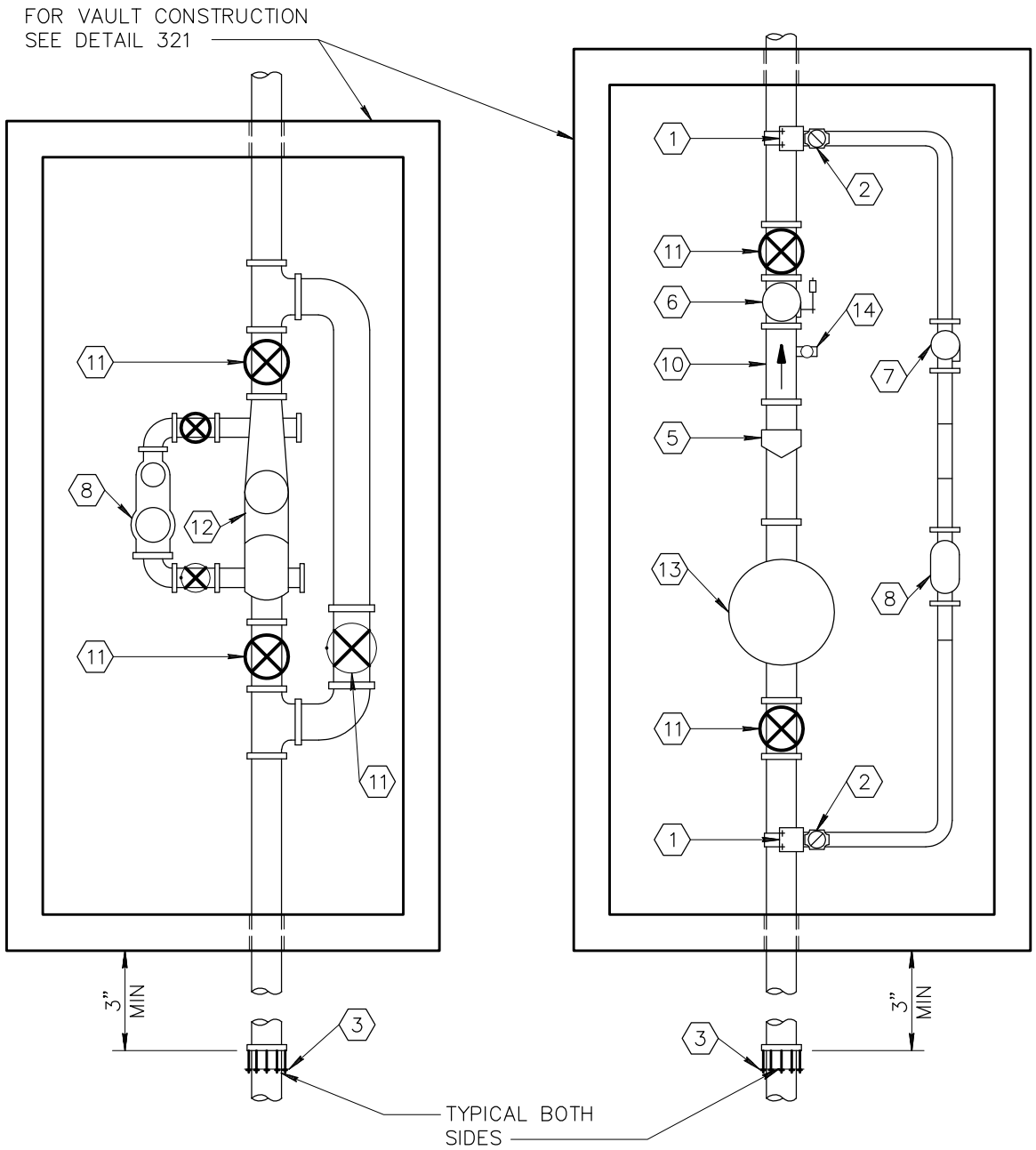

LEGEND

1. DOUBLE STRAP ALL BRONZE SERVICE SADDLES.
2. CORP. STOP, 2" (BALL TYPE).
3. ADAPTER, FLANGED, TO MECH. JOINT FOR A.C.P.
4. GATE VALVE, FLANGED, WITH HAND WHEEL, OPEN LEFT.
5. TURBOMETER: ROCKWELL SERIES 'W' OR HERSEY SERIES 'M.H.R.' OR NEPTUNE TRIDENT TURBINE.
6. FLANGED SWING CHECK VALVE WITH EXTERNAL LEVER AND WEIGHT.
7. 2" BRONZE CHECK VALVE.
8. 2" TURBOMETER: ROCKWELL 'W-160' OR HERSEY 'M.H.R.' OR NEPTUNE TRIDENT TURBINE.
9. STRAINER (3", 4", 6") AVAILABLE FROM METER MANUFACTURER, INSTALL ONLY WHEN 'TURBO' IS USED.
10. FLANGED SPOOL (3 PIPE DIAMETERS IN LENGTH).
11. O.S.&Y. GATE VALVE, FLANGED WITH HAND WHEEL OPEN LEFT, AND RISING STEM.
12. TURBOMETER U.L. APPROVED: ROCKWELL W-5000 DR. OR W-2000 DR. OR HERSEY F.M.-C.T. OR NEPTUNE TURBINE-F.S.-U.L.
13. 6" OR 10" STRAINER, U.L. APPROVED.
14. 2" THREADED OUTLET AND GATE VALVE.

NOTES

1. FOR LARGER METERS, SPECIAL VAULT DESIGN IS REQUIRED.
2. USE OF REMOTE READING DEVICE AT OPTION OF UTILTIY.
3. CERTAIN AGENCIES AND/OR UTILITIES PREFER TO CONSTRUCT VAULT, CONTACT AGENCY INVOLVED PRIOR TO VAULT CONSTRUCTION.

DETAIL NO.				REVISED	DETAIL NO.
345-2	MARICOPA ASSOCIATION of GOVERNMENTS	STANDARD DETAIL ENGLISH	4", 6" WATER METER WITH ON-SITE FIRE HYDRANTS	01-01-1998	345-2

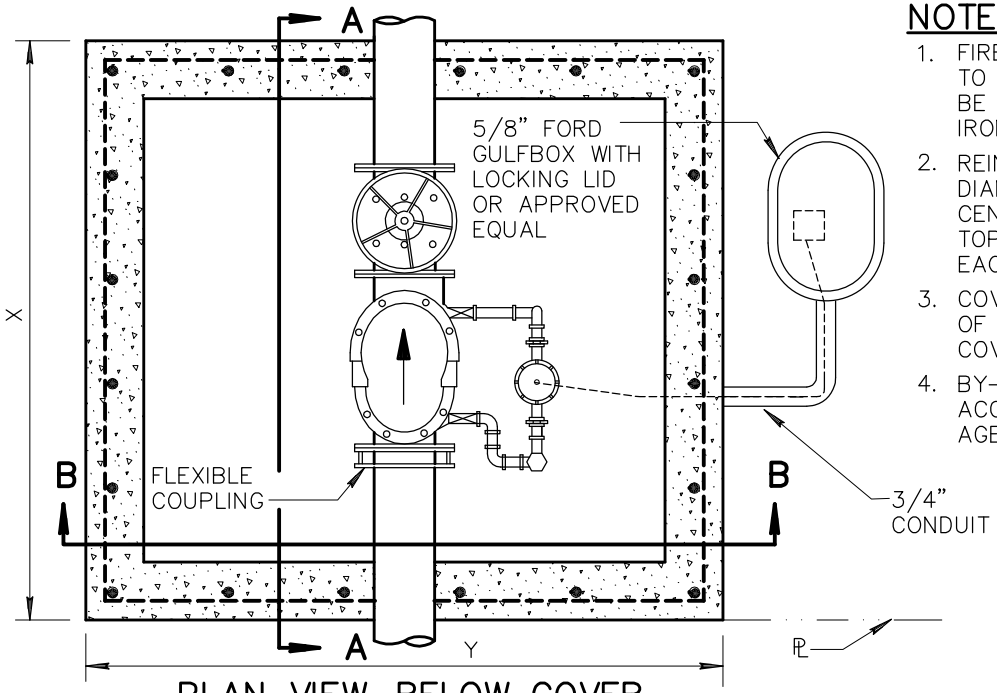

PLAN VIEW–BELOW COVER

NOTES:

1. FIRELINE FROM CITY MAIN TO PROPERTY LINE SHALL BE CONSTRUCTED OF CAST IRON PIPE.
2. REINFORCING TO BE 1/2" DIAMETER REBAR ON 6" CENTERS EACH WAY ON TOP AND 12" CENTERS EACH WAY ON THE SIDES.
3. COVERS TO CONSIST OF TWO METER BOX COVERS DET. 314.
4. BY–PASS METER TO BE ACCORDING TO GOVERNING AGENCY.
5. CHECK VALVE TO BE GLOBE MODEL "A" GRINNEL, HERSEY MODEL D.C., VIKING MODEL "A" OR APPROVED EQUAL.
6. VAULT SHALL BE CONSTRUCTED IN OWNERS PROPERTY AGAINST THE FRONT PROPERTY LINE OR ANOTHER APPROVED LOCATION. WALLS AND FENCES SHALL NOT OBSTRUCT ACCESS.
7. CITY CONTROL VALVE TO BE REQUIRED AT MAIN.
8. PARTS OF PIPE TO BE EMBEDDED IN CONC. SHALL BE WRAPPED WITH 30 LB ASPHALT ROOFING FELT.
9. REMOTE READING DEVICE SHALL BE OF SELF GENERATING ELECTRICAL TYPE. HYDRAULIC OR MECHANICAL DRIVE REGISTERS WILL NOT BE ACCEPTABLE.
10. CONCRETE TO BE CLASS 'B' PER SECT. 725.

DIA. OF PIPE	X	Y	Z	BY–PASS METER SIZE	A
4"	60"	66"	49"	5/8" x 3/4"	30"
6"	66"	72"	49"	5/8" x 3/4"	30"
8"	72"	72"	58"	1"	36"
10"	78"	72"	69"	1–1/2"	36"

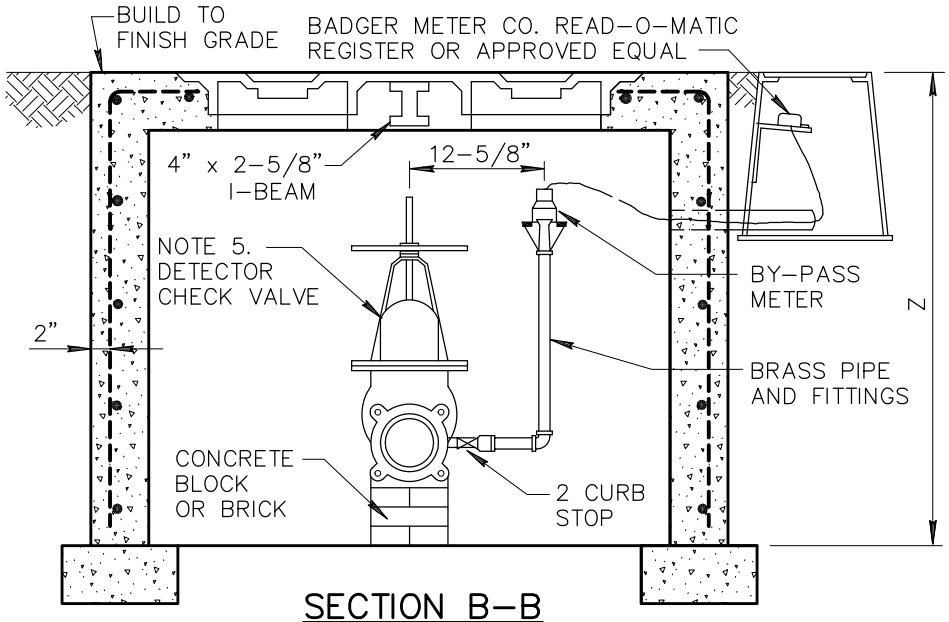

SECTION B–B

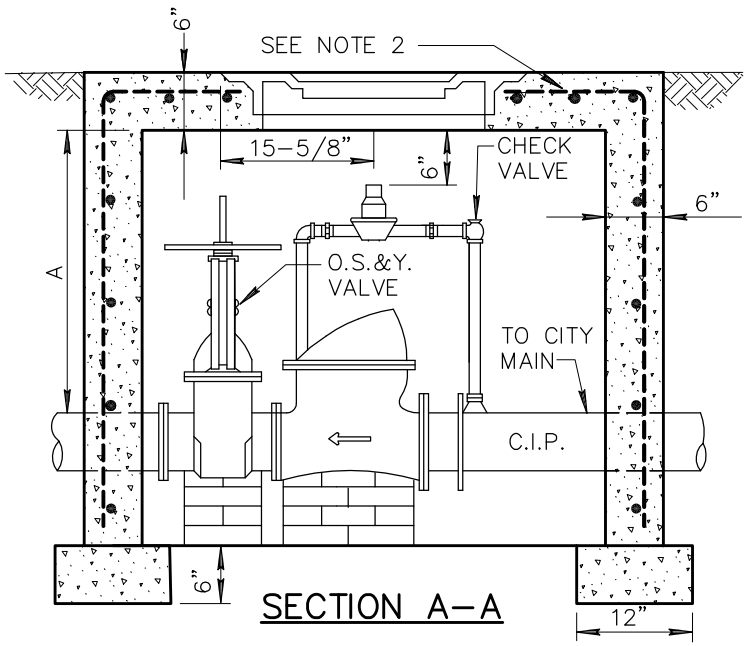

SECTION A–A

DETAIL NO.				REVISED	DETAIL NO.
346	MARICOPA ASSOCIATION of GOVERNMENTS	STANDARD DETAIL ENGLISH	FIRE LINE DETECTOR CHECK VAULT	01–01–1998	346

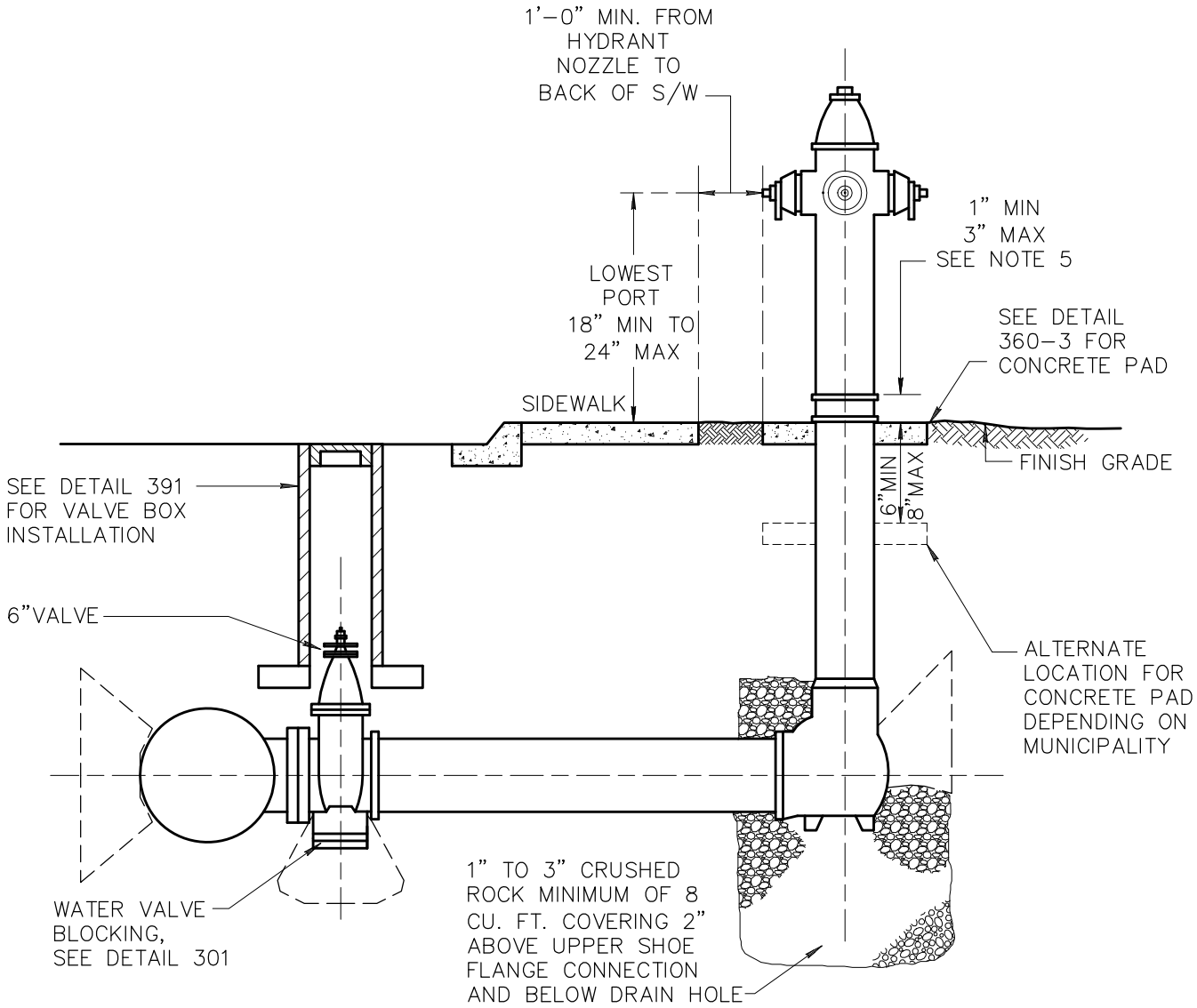

NOTES:

1. JOINTS BETWEEN THE VALVE AND THE MAIN SHALL BE FLANGED TYPE. JOINTS BETWEEN THE VALVE AND HYDRANT SHALL BE RESTRAINT OR MECHANICAL TYPE.
2. RESTRAINTS SHALL BE MECHANICAL RESTRAINT OR THRUST BLOCK PER DETAIL 380.
3. A FLANGE JOINT BY MECHANICAL JOINT VALVE SHALL BE USED AS THE TRANSITION BETWEEN THE JOINT TYPES.
4. PIPING BETWEEN WATER VALVE AND HYDRANT SHALL BE DUCTILE IRON.
5. SEE DETAIL 362 FOR LOCATION OF HYDRANT.
6. PUMPER CONNECTION SHALL FACE THE STREET.
7. NO VALVES ARE TO BE LOCATED IN CURB.
8. NATIONAL STANDARD THREADS REQUIRED ON ALL CONNECTIONS UNLESS OTHERWISE DIRECTED.
9. SEE DETAIL 360–3 FOR CONCRETE PAD.
10. FIRE HYDRANT SHALL BE FRESHLY PAINTED PRIOR TO FINAL ACCEPTANCE.
11. SEE SECTION 756 FOR HYDRANT MATERIAL.

DETAIL NO.				REVISED	DETAIL NO.
360-1	MARICOPA ASSOCIATION of GOVERNMENTS	STANDARD DETAIL ENGLISH	DRY BARREL FIRE HYDRANT INSTALLATION	01–01–2013	360-1

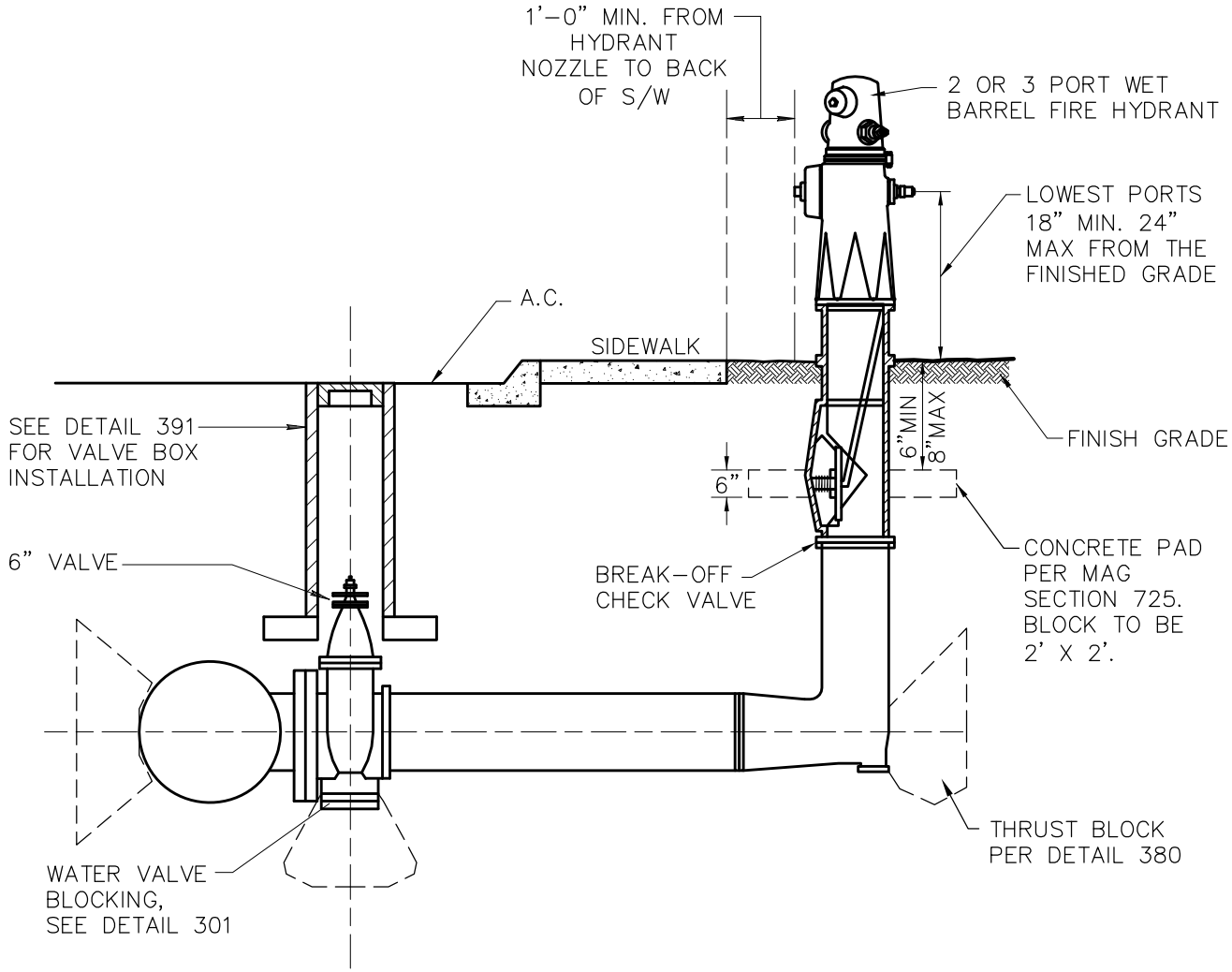

NOTES:

1. JOINTS BETWEEN THE VALVE AND THE MAIN SHALL BE FLANGED TYPE. JOINTS BETWEEN THE VALVE AND HYDRANT SHALL BE MECHANICAL RESTRAINT MECHANICAL TYPE.
2. RESTRAINTS SHALL BE MECHANICAL RESTRAINT OR THRUST BLOCK PER DETAIL 380.
3. A FLANGE JOINT BY MECHANICAL JOINT VALVE SHALL BE USED AS THE TRANSITION BETWEEN THE JOINT TYPES.
4. PIPING BETWEEN WATER VALVE AND HYDRANT SHALL BE DUCTILE IRON.
5. SEE DETAIL 362 FOR LOCATION OF HYDRANT.
6. PUMPER CONNECTION SHALL FACE THE STREET.
7. NO VALVES ARE TO BE LOCATED IN CURB.
8. NATIONAL STANDARD THREADS REQUIRED ON ALL CONNECTIONS UNLESS OTHERWISE DIRECTED.
9. SEE DETAIL 360-3 FOR CONCRETE PAD.
10. FIRE HYDRANT SHALL BE FRESHLY PAINTED PRIOR TO FINAL ACCEPTANCE.
11. THE HYDRANT SHALL HAVE 2- 2½" PORT AND 1- 4½" PORT (INDUSTRIAL OR COMMERCIAL).
12. THE HYDRANT SHALL HAVE 1- 2½" PORT AND 1- 4½" PORT (RESIDENTIAL).

DETAIL NO.				REVISED	DETAIL NO.
360-2	MARICOPA ASSOCIATION of GOVERNMENTS	STANDARD DETAIL ENGLISH	WET BARREL FIRE HYDRANT INSTALLATION	01-01-2013	360-2

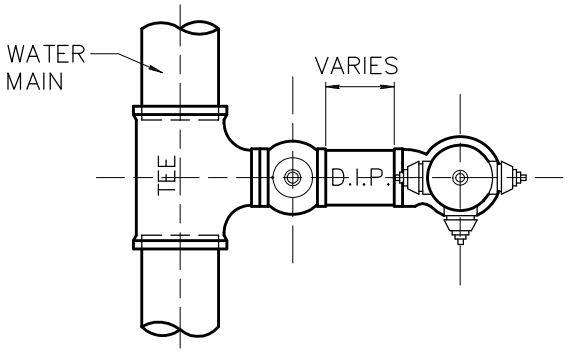

TYP MAIN CONNECTION
(PREFERRED)

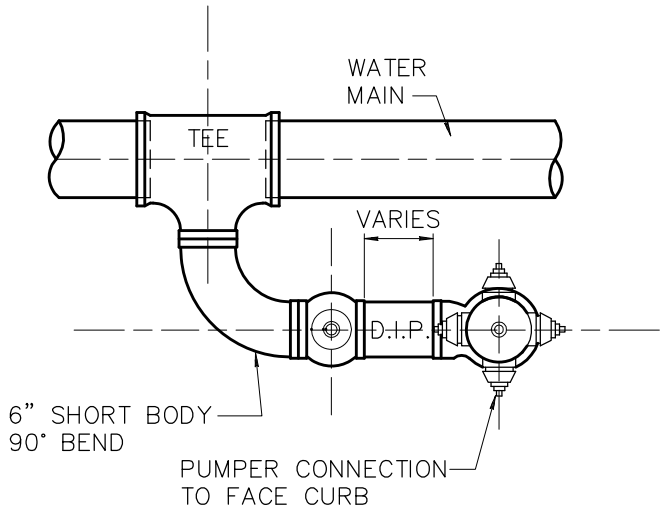

ALT MAIN
CONNECTION

SQUARE OR ROUND IS ACCEPTABLE
IF ROUND: 24" DIAMETER MIN. REQUIRED

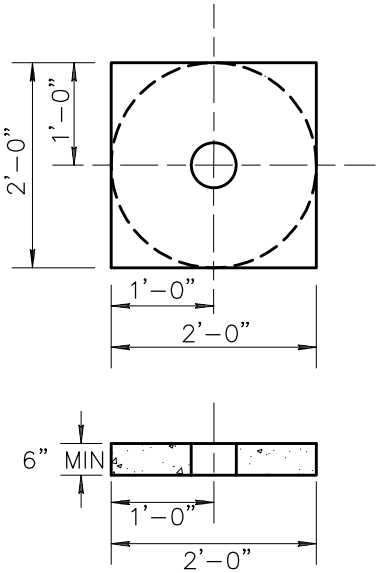

CONCRETE PAD
LOCATION DETAIL

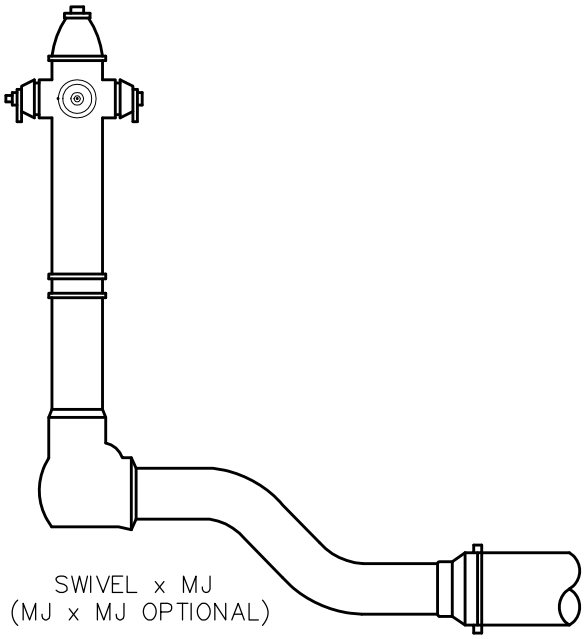

OFFSET FITTINGS

NOTES:

1. CONCRETE FOR PAD SHALL BE CLASS "A".
2. SCORE LINE SHALL BISECT CONCRETE PAD AT MID POINT OF ALL SIDES.
3. CONCRETE COLOR SHALL MATCH ADJACENT CONCRETE. THE FINISHED CONCRETE SURFACE SHALL HAVE A ROUGH BROOM FINISH (SURFACE ONLY).
4. MULTIPLE OFFSET FITTINGS SHALL NOT BE ALLOWED.
5. MINIMUM 36" CLEARANCE PER NFPA-24 AROUND FIRE HYDRANT.
6. 1/2" BITUMINOUS EXPANSION SHALL BE PLACED AROUND THE BARREL OF THE FIRE HYDRANT AT THE CONCRETE PAD.

DETAIL NO.		STANDARD DETAIL		REVISED	DETAIL NO.
360-3	MARICOPA ASSOCIATION of GOVERNMENTS	ENGLISH	FIRE HYDRANT INSTALLATION DETAILS	01-01-2013	360-3

NOTES:

1. OBSTRUCTIONS SUCH AS UTILITY POLES, STREET SIGNS, IRRIGATION BOXES, FENCES, ETC., MUST NOT BE PLACED BETWEEN CURB AND HYDRANT AND WITHIN THE RADIUS FOR FIRE DEPT. ACCESS.

2. DIMENSIONS SHOWN ON CONSTRUCTION DRAWINGS SUPERSEDE LOCATIONS SHOWN HERE.

3. ON LOCATIONS IN MIDBLOCK, THE FIRE HYDRANT WILL BE ALIGNED WITH A PROPERTY LINE.

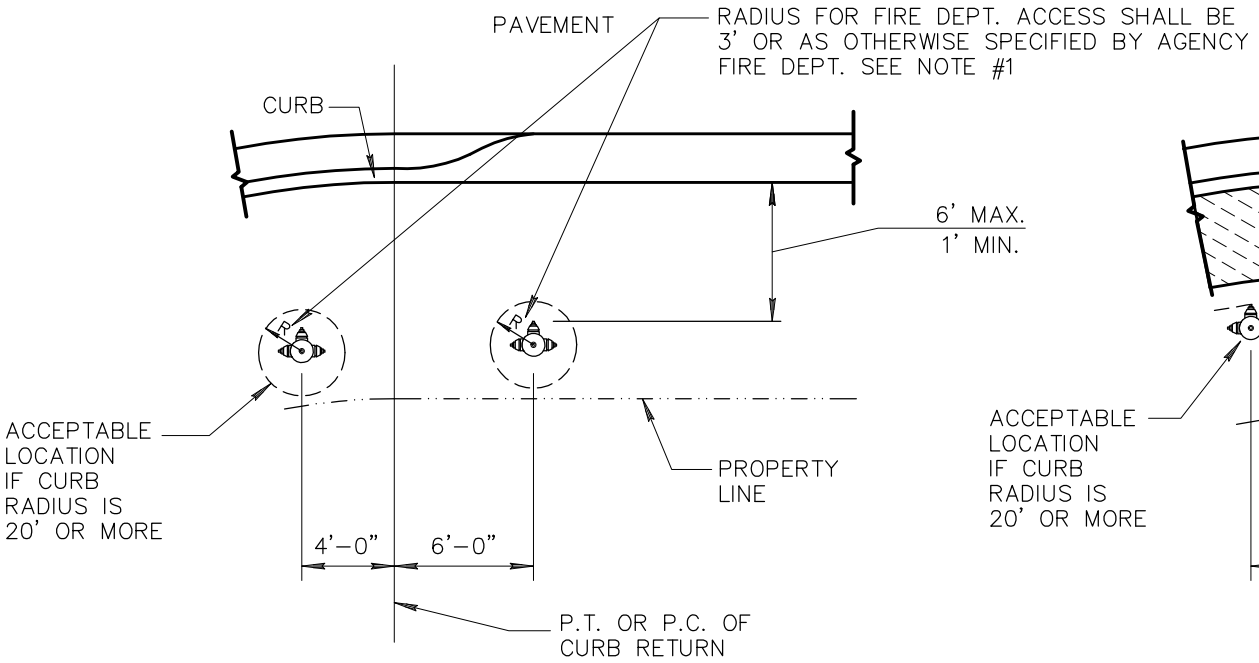

PARKWAY AREA OR NO SIDEWALK

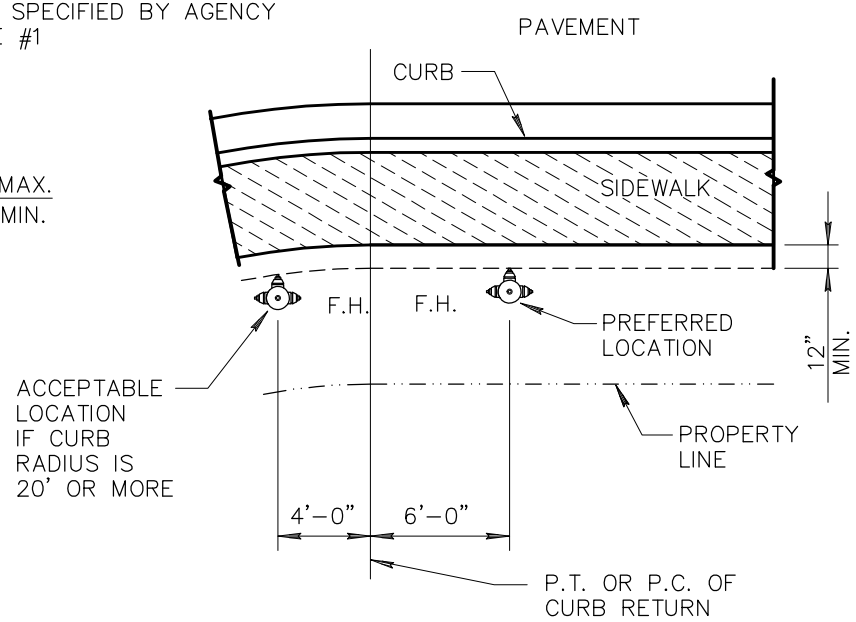

AREA WITH SIDEWALK

DETAIL NO.		STANDARD DETAIL		REVISED	DETAIL NO.
362	MARICOPA ASSOCIATION of GOVERNMENTS	ENGLISH	LOCATIONS FOR NEW FIRE HYDRANTS	01-01-1999	362

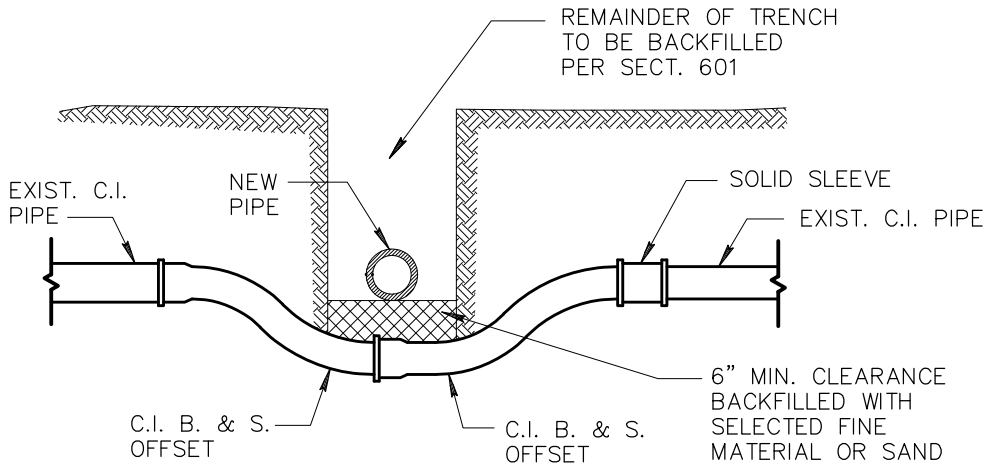

CAST IRON

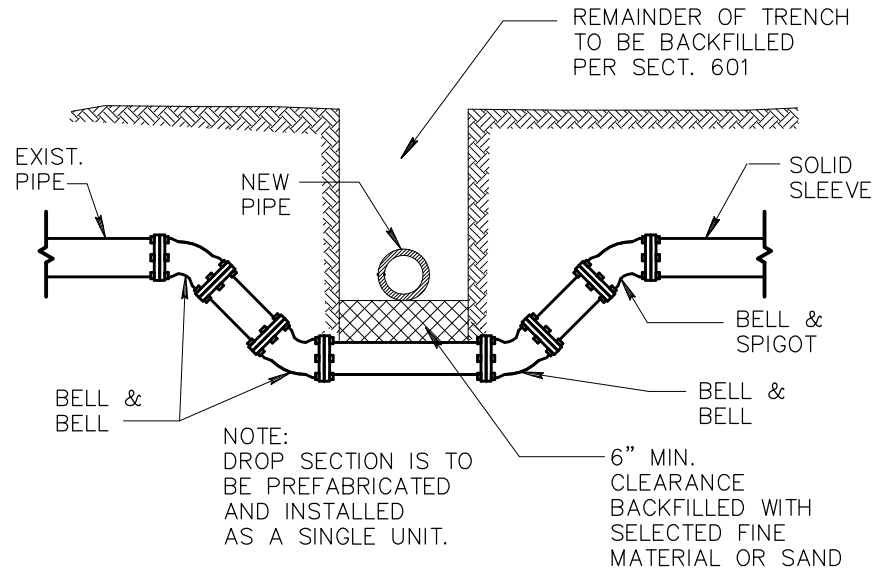

CAST IRON MECHANICAL JOINT

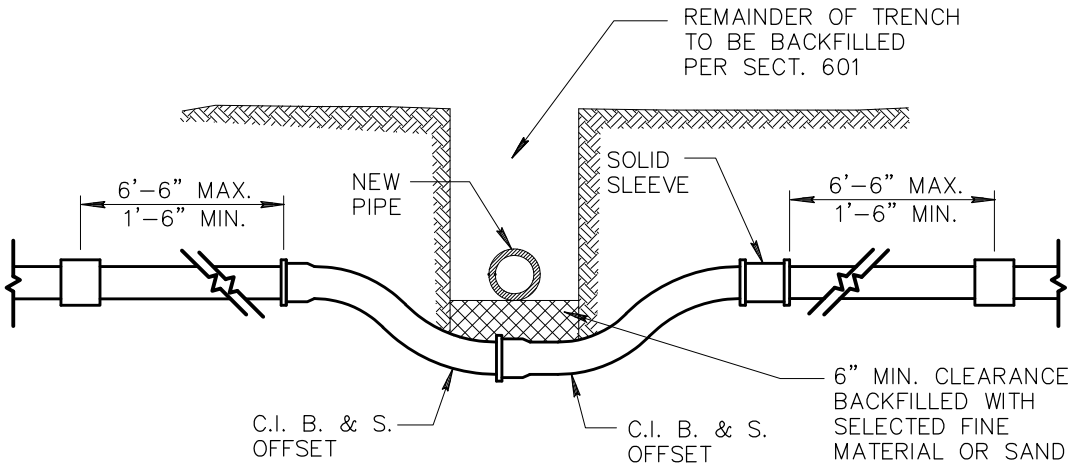

ASBESTOS CEMENT

NOTES:

1. THIS DETAIL COVERS MOVING OF WATER MAINS 2" TO 12" ONLY.
2. THRUST BLOCKING AS PER DET. 380 & 381.
3. IF OFFSET IS TO GO OVER OBSTRUCTION, JOINT RESTRAINTS MUST BE USED.
4. PIPE IS TO BE CAST IRON OR DUCTILE IRON.

DETAIL NO.				REVISED	DETAIL NO.
370	MARICOPA ASSOCIATION of GOVERNMENTS	STANDARD DETAIL ENGLISH	VERTICAL REALIGNMENT OF WATER MAINS	01-01-1998	370

TYPICAL LOCATIONS OF THRUST BLOCKS

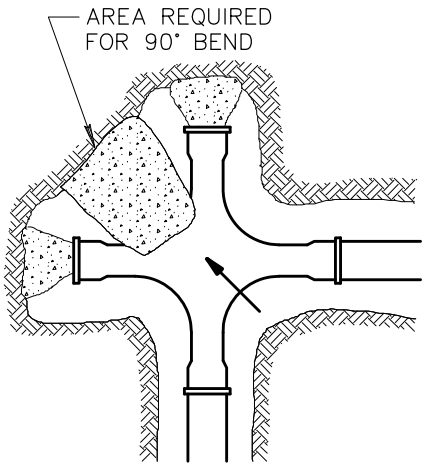

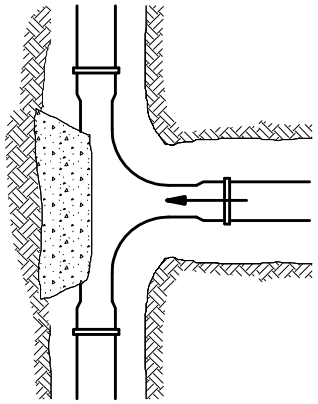

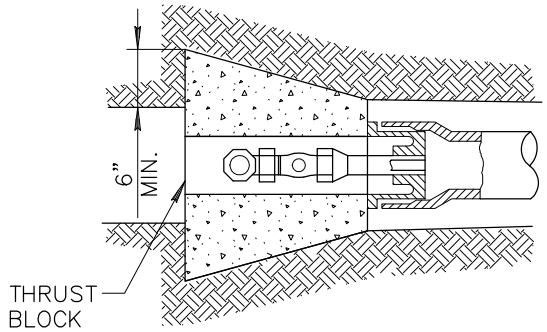

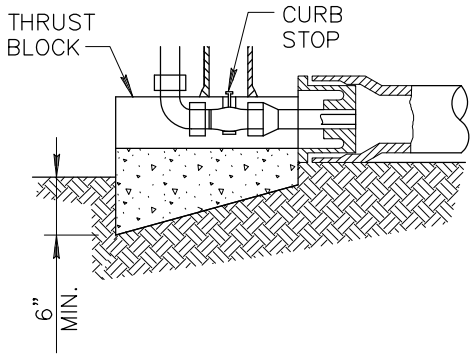

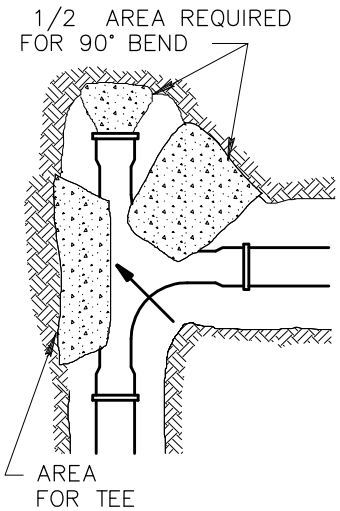

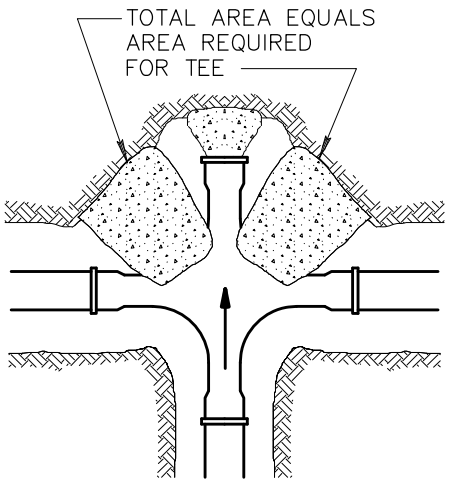

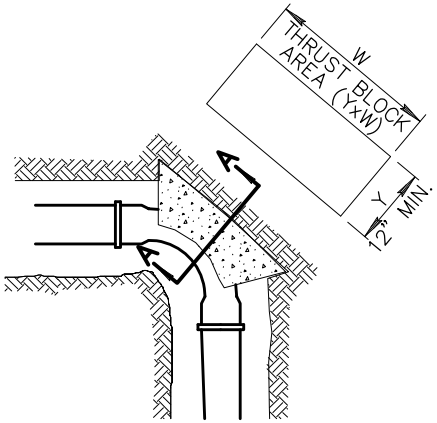

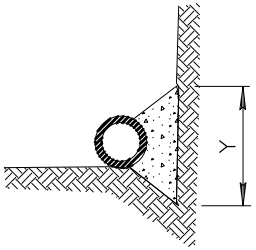

SECTION A–A

NOTES:

1. TABLE IS BASED ON 200 P.S.I. TEST PRESSURE AND 3,000 LBS/SQ FT. SOIL. IF CONDITIONS ARE FOUND TO INDICATE SOIL BEARING IS LESS, THE AREAS SHALL BE INCREASED ACCORDINGLY.
2. AREAS FOR PIPES LARGER THAN 16" SHALL BE CALCULATED FOR EACH PROJECT.
3. FORM ALL NON–BEARING VERTICAL SURFACES.
4. THRUST BLOCKS ARE TO EXTEND TO UNDISTURBED GROUND. CONCRETE TO BE CLASS 'C', SECT. 725.

MINIMUM THRUST BLOCK AREA REQUIRED (YxW) (SQ. FT.)

PIPE SIZE	WATER PIPE	
	TEE, DEAD END, 90° BEND	45° & 22 1/2° BENDS
4" OR LESS	3	3
6"	4	3
8"	6	3
10"	10	5
12"	14	7
16"	24	12

DETAIL NO.				REVISED	DETAIL NO.
380	MARICOPA ASSOCIATION of GOVERNMENTS	STANDARD DETAIL ENGLISH	THRUST BLOCKS FOR WATER LINES	01–01–1998	380

PIPE SIZE	MIN BAR SIZE	"A"–DIMENSION HOOK	MIN. * BLOCK DIM.
6"	#6	6"	3' x 3' x 3'
8"	#6	9"	4' x 4' x 2.5'
12"	#8	9"	4' x 4' x 5'

* FOR 125 P.S.I. WORKING PRESSURE.

NOTES:

1. EITHER THIS DETAIL OR RESTRAINT RODS CAN BE USED WHEN IT IS ALLOWED TO RELOCATE A WATER LINE UPWARD OR DOWNWARD TO CROSS A CONFLICT.
2. DUCTILE IRON PIPE MAY BE USED.
3. BARS TO CONCRETE THRUST BLOCK TO BE COATED WITH 2 COATS COAL TAR, EPOXY OR BY OTHER APPROVED METHOD. BARS TO HAVE 90° HOOK ON LOWER END, AS PER TABLE.

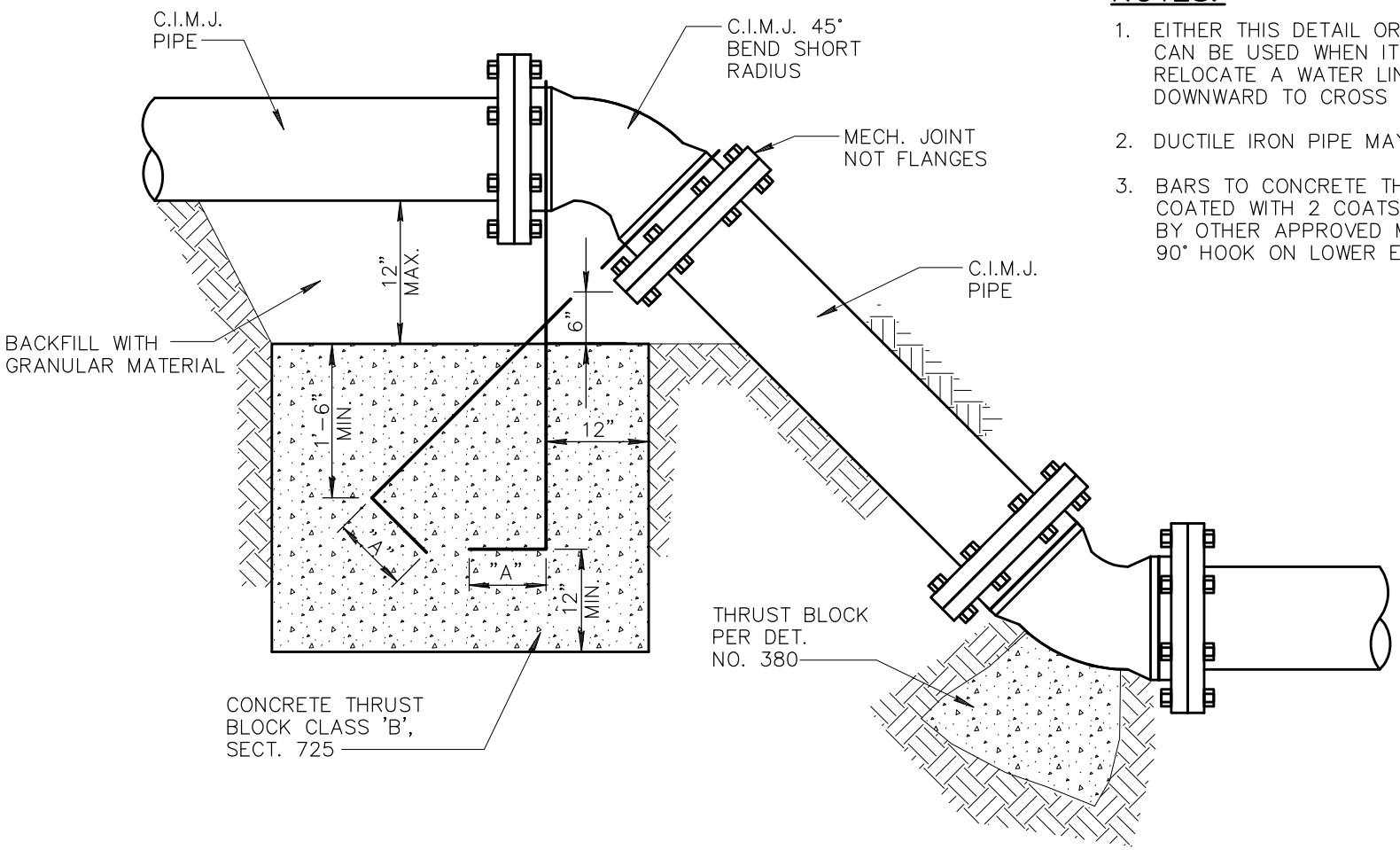

DETAIL NO.		STANDARD DETAIL		REVISED	DETAIL NO.
381	MARICOPA ASSOCIATION of GOVERNMENTS	ENGLISH	ANCHOR BLOCKS FOR VERTICAL BENDS	01–01–1998	381

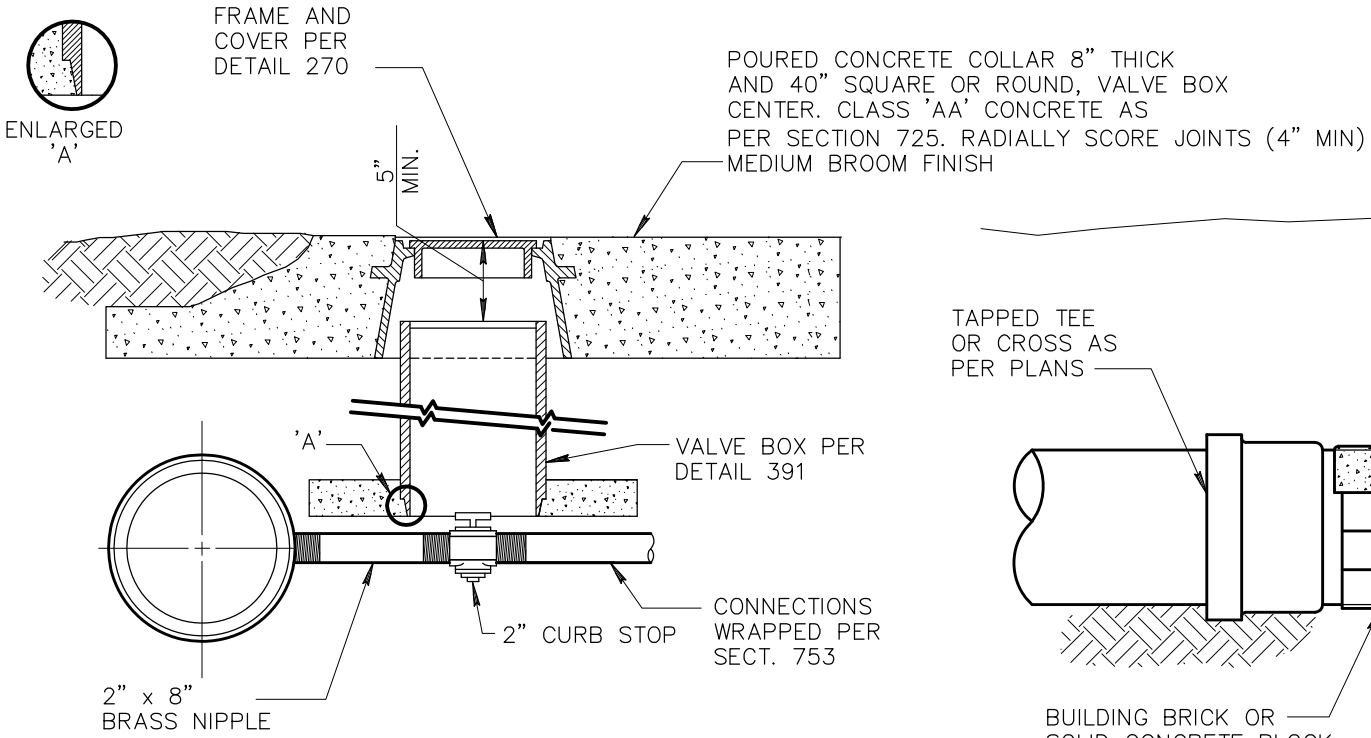

TYPE 'A'

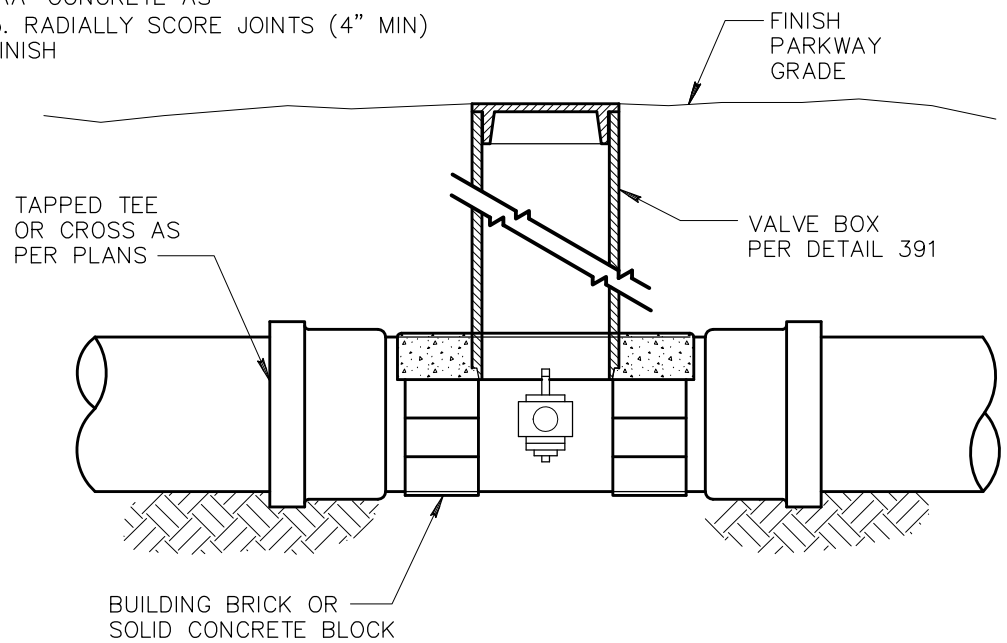

TYPE 'B'

NOTES:

1. CURB STOP TO BE MUELLER ORISEAL (H–10283), FORD BALL VALVE B11–777, HAYES BULLETIN 400, J. JONES (J–1900) OR APPROVED EQUAL.
2. REDUCER MAY BE USED WHEN CONNECTING TO SMALLER GALVANIZED PIPE.
3. THIS DETAIL IS TO BE USED WHEN CONNECTING EXISTING GALVANIZED PIPE TO ASBESTOS CEMENT PIPE OR CAST IRON PIPE.

NOTE:

1. VALVE BOX TO BE SUPPORTED ON BRICKS TO PREVENT VERTICAL LOADS FROM BEING TRANSMITTED TO THE SMALL PIPE.

DETAIL NO.				REVISED	DETAIL NO.
389	MARICOPA ASSOCIATION of GOVERNMENTS	STANDARD DETAIL ENGLISH	CURB STOP WITH VALVE BOX AND COVER	01–01–2001	389

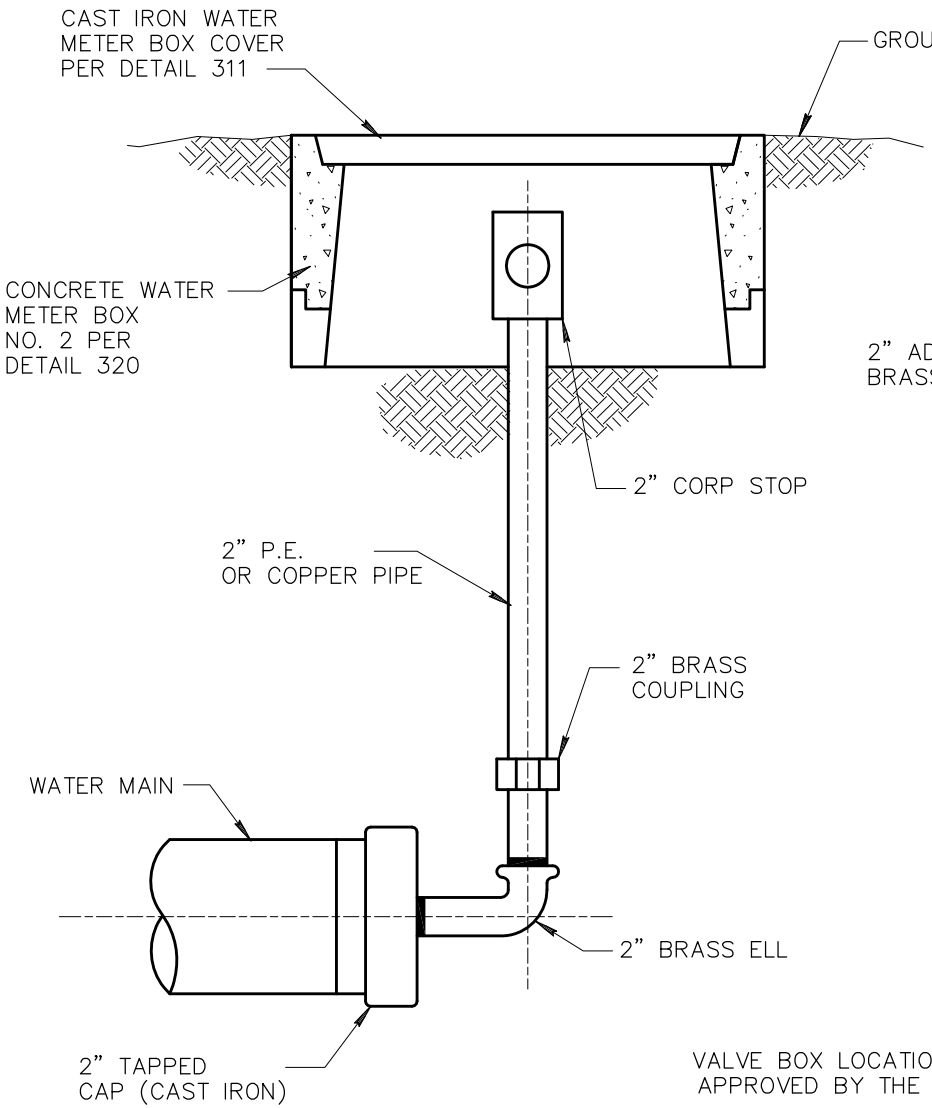

TYPE 'A'

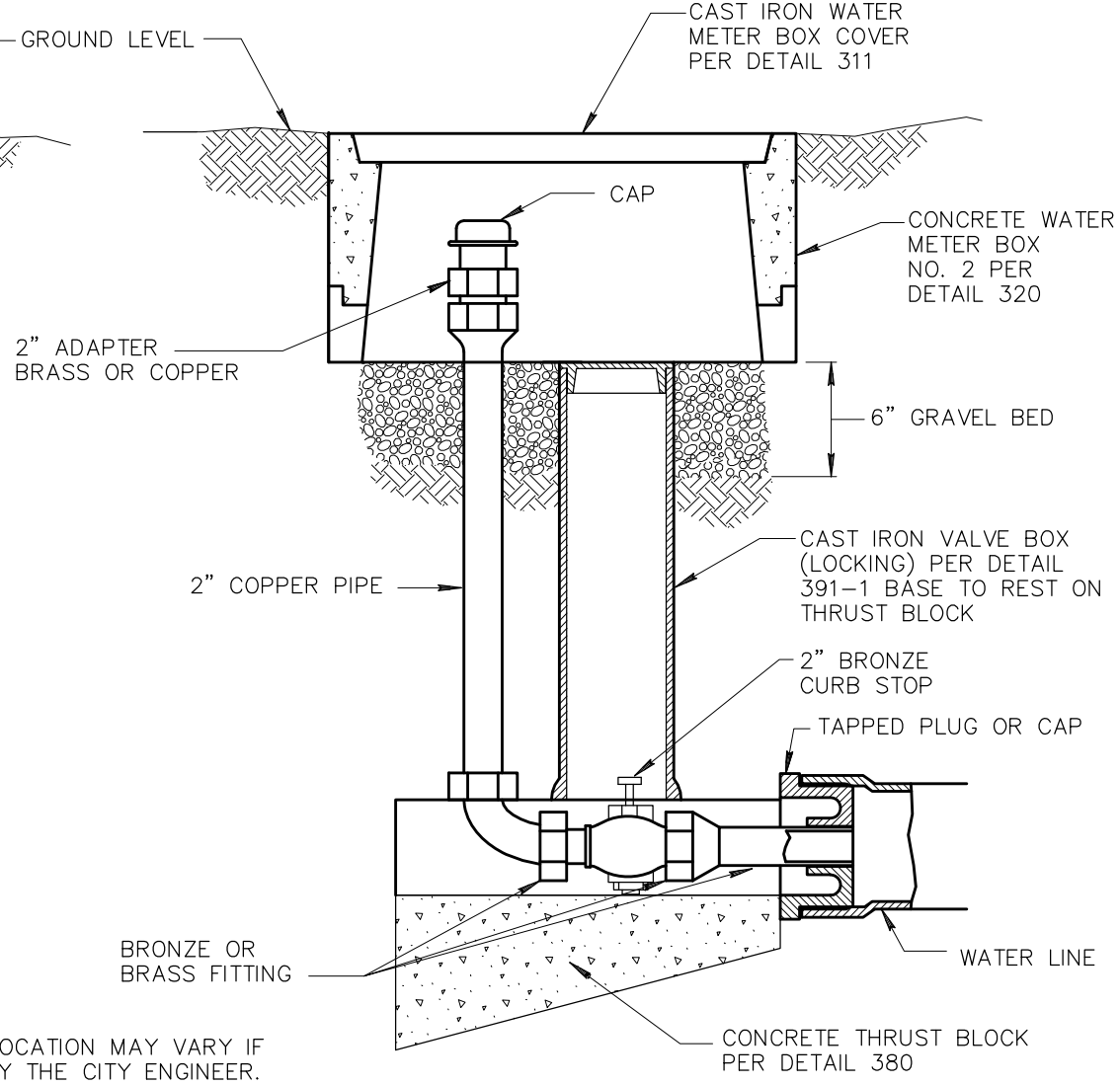

VALVE BOX LOCATION MAY VARY IF APPROVED BY THE CITY ENGINEER.

TYPE 'B'

DETAIL NO.				REVISED	DETAIL NO.
390	MARICOPA ASSOCIATION of GOVERNMENTS	STANDARD DETAIL ENGLISH	CURB STOP WITH FLUSHING PIPE	01-01-1998	390

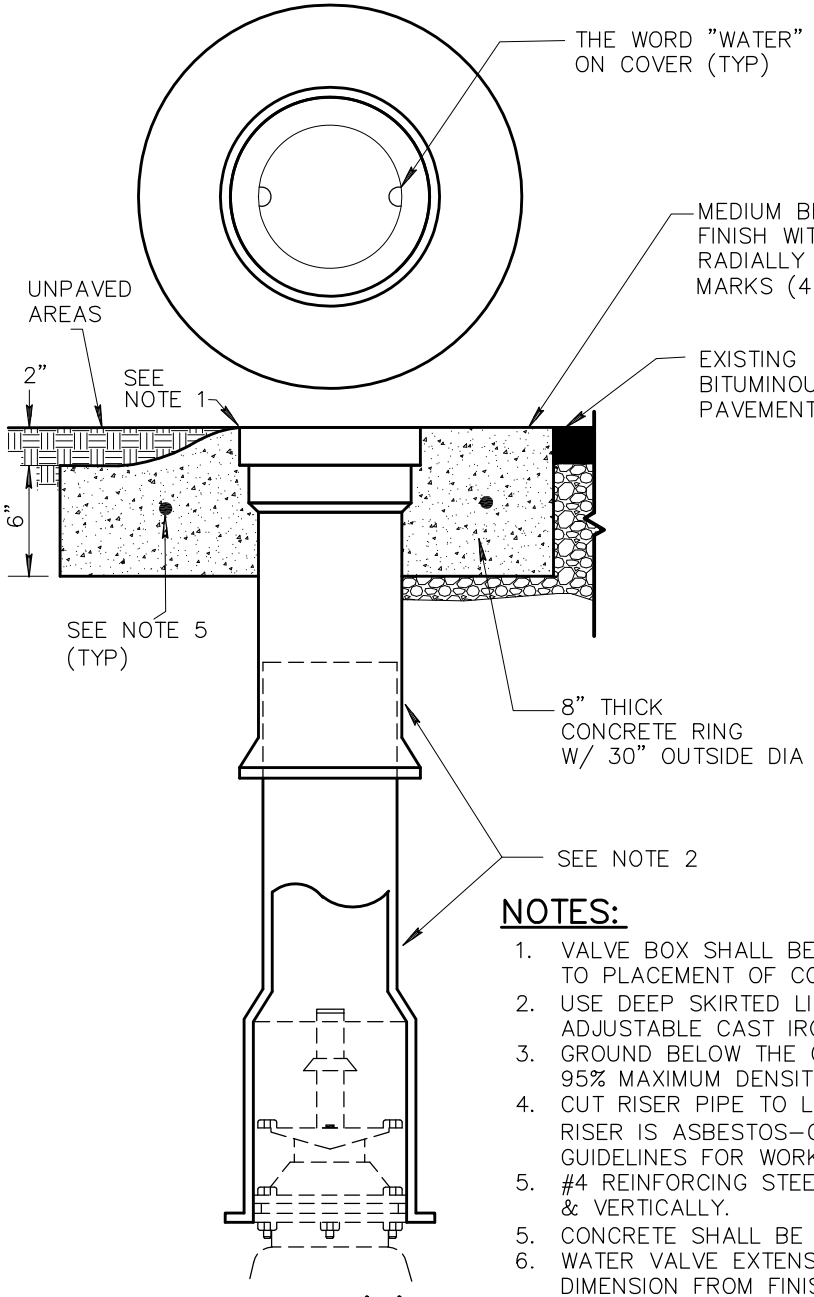

TYPE 'C'

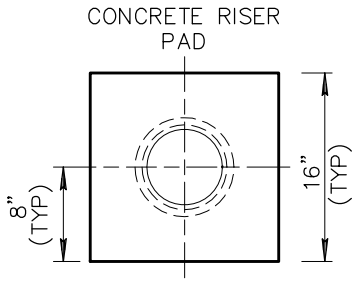

VIEW A–A

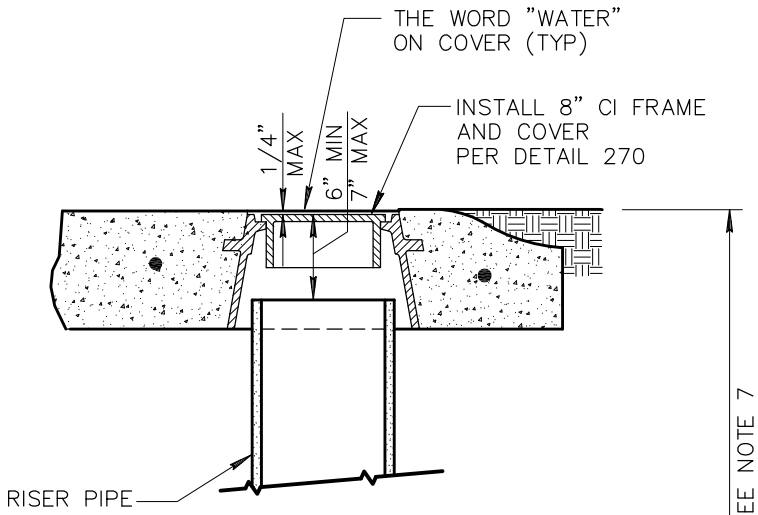

TYPE 'A'

(TO BE USED IN AREAS SUBJECT TO VEHICULAR TRAFFIC)

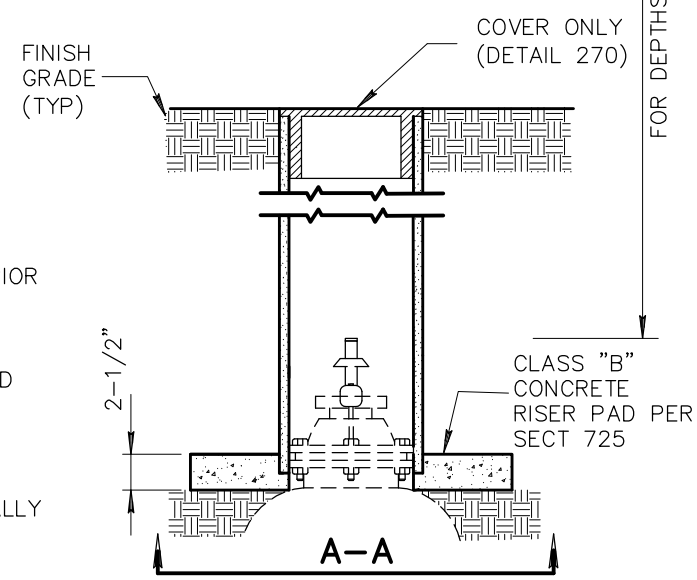

TYPE 'B'

(NOT SUBJECT TO VEHICULAR TRAFFIC)

NOTES:

1. VALVE BOX SHALL BE ADJUSTED TO THE FINISHED GRADE PRIOR TO PLACEMENT OF CONCRETE.
2. USE DEEP SKIRTED LID (4" OR MORE) TYPE, SLIDING ADJUSTABLE CAST IRON VALVE BOX C.I. MIN 30,000 P.S.I.
3. GROUND BELOW THE CONCRETE RISER PAD TO BE COMPACTED 95% MAXIMUM DENSITY.
4. CUT RISER PIPE TO LENGTH IN FIELD. **CAUTION:** IF EXISTING RISER IS ASBESTOS–CEMENT PIPE (ACP) FOLLOW OSHA GUIDELINES FOR WORKING WITH ACP.
5. #4 REINFORCING STEEL HOOP EQUALLY CENTERED HORIZONTALLY & VERTICALLY.
5. CONCRETE SHALL BE CLASS "AA" PER SECTION 725.
6. WATER VALVE EXTENSIONS SHALL BE INSTALLED WHEN THE DIMENSION FROM FINISH GRADE TO THE TOP OF THE OPERATING NUT EXCEEDS 5 FEET. SEE DETAIL 393 FOR VALVE EXTENSION.

DETAIL NO.		STANDARD DETAIL		REVISED	DETAIL NO.
391–1	MARICOPA ASSOCIATION of GOVERNMENTS	ENGLISH	VALVE BOX INSTALLATION AND GRADE ADJUSTMENT	01–01–2017	391–1

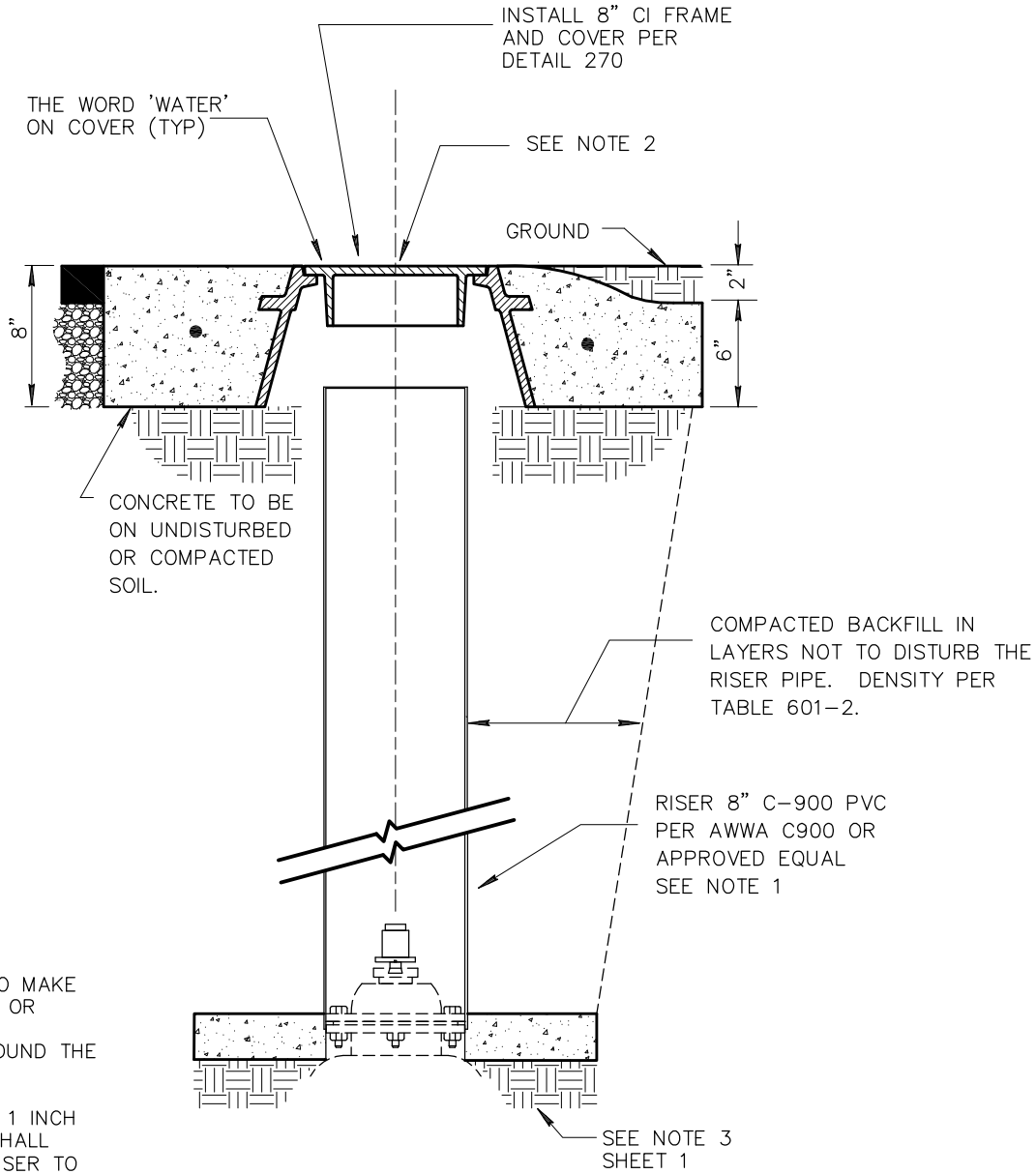

NOTES:

1. IF TWO OR MORE SECTIONS OF PIPE ARE USED TO MAKE THE VALVE BOX RISER, THEY SHALL BE COUPLED OR BONDED TO FORM DEBRIS-TIGHT JOINTS.
2. VALVE BOX SHALL BE PLUMB AND CENTERED AROUND THE OPERATING NUT.
3. THE TOP OF THE VALVE SHALL BE KEPT CLEAN.
4. THE TOP OF THE RISER SHALL BE A MINIMUM OF 1 INCH ABOVE UNDISTURBED OR COMPACTED SOIL AND SHALL HAVE A MINIMUM CLEARANCE OF 2" FROM THE RISER TO THE LID SKIRT.

DRAFT				REVISED	DETAIL NO.
391-2	MARICOPA ASSOCIATION of GOVERNMENTS	STANDARD DETAIL ENGLISH	VALVE BOX INSTALLATION AND GRADE ADJUSTMENT	01-01-2017	391-2

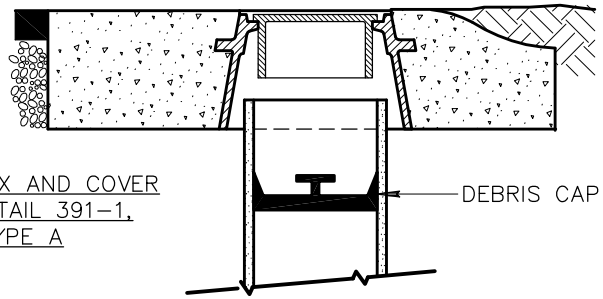

TYPE 'A'

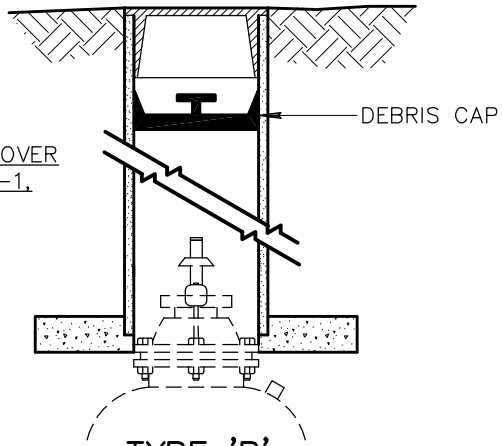

TYPE 'B'

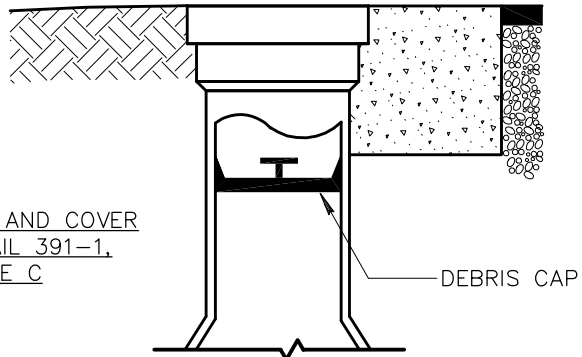

TYPE 'C'

NOTES:

1. THE DEBRIS CAP SHALL BE DESIGNED AND INSTALLED TO PREVENT DEBRIS SUCH AS DIRT, DUST SAND, ETC., FROM PASSING AROUND THE CAP AND DOWN INTO THE VALVE HOUSING. THE CAP SHALL BE HELD IN PLACE BY A MECHANISM WHICH WILL NOT DAMAGE THE VALVE HOUSING.
2. THE CAP SHALL BE MANUFACTURED OF CORROSIVE RESISTANT MATERIALS.
3. DEBRIS CAP SHALL BE INSTALLED AS CLOSE UNDER THE CAST IRON COVER WITHOUT INTERFERING WITH COVER OPERATION.
4. THE CAP SHALL BE CAPABLE OF SECURELY HOLDING A STANDARD LOCATING COIL, "SCOTCH MARK" 4 DISK MARKER BY 3M OR EQUAL.
5. THE CAP SHALL BE CONSTRUCTED TO ALLOW THE DEVICE TO BE SECURED BY A LOCK. THE LOCK (PAD, BARREL, ETC.) SHALL BE SUPPLIED BY THE AGENCY.
6. THE CAP SHALL BE INSTALLED IN ALL VALVE HOUSINGS AS REQUIRED BY THE CONTRACT DOCUMENTS OR BY THE AGENCY'S POLICIES.

PIPE SLEEVE DETAIL

MATERIAL: STEEL PER ASTM A513

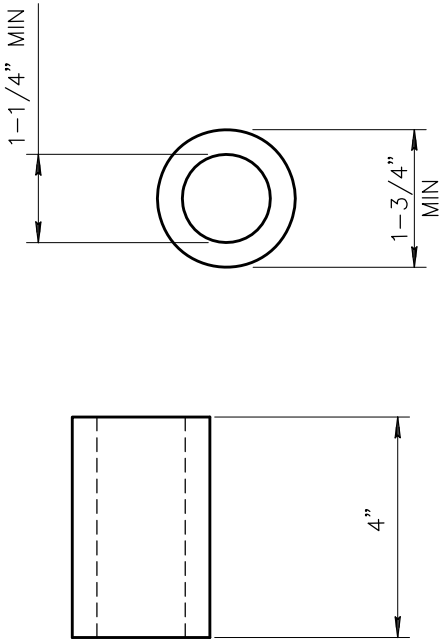

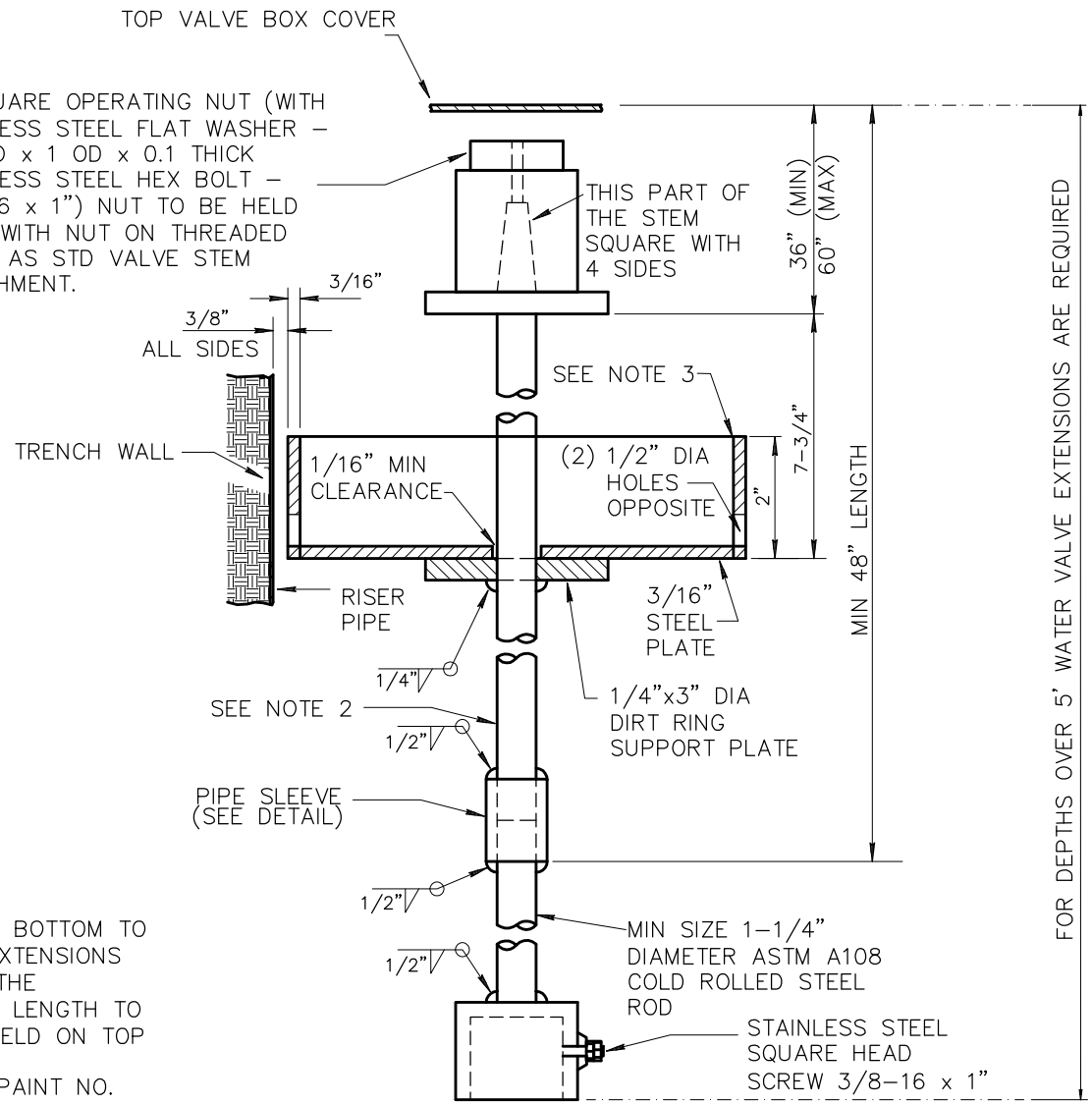

NOTES:

1. EXTENSION STEM: WITH A SQUARE SOCKET ON THE BOTTOM TO FIT A 2" SQUARE VALVE OPERATING NUT. VALVE EXTENSIONS ARE REQUIRED ON ALL VALVES INSTALLED WHERE THE OPERATING NUT IS OVER 5' BELOW THE SURFACE. LENGTH TO FIT EACH INSTALLATION. OPERATING NUT TO BE HELD ON TOP OF EXTENSION WITH STOP NUT.
2. PAINTING: ALL STEEL TO HAVE A PRIME COAT OF PAINT NO. 1-D AND ONE HEAVY APPLICATION (FINISH COAT) OF PAINT NO. 9 AS PER SECTION 790.
3. DIRT RING TO FLOAT FREELY ON THE TOP OF THE SUPPORT PLATE.
4. PIPE SLEEVE SHALL BE SECURELY WELDED TO THE UPPER AND LOWER PORTION OF THE 1-1/4" EXTENSION ROD.

DRAFT				REVISED	DETAIL NO.
393	MARICOPA ASSOCIATION of GOVERNMENTS	STANDARD DETAIL ENGLISH	WATER VALVE EXTENSION	01-01-2017	393

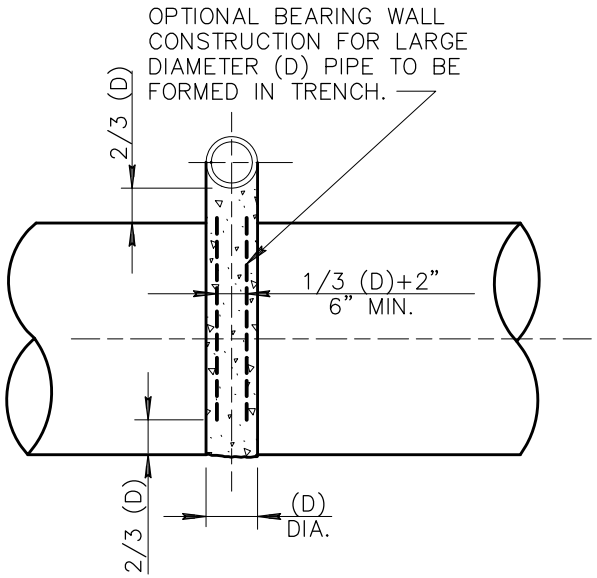

SECTION A–A

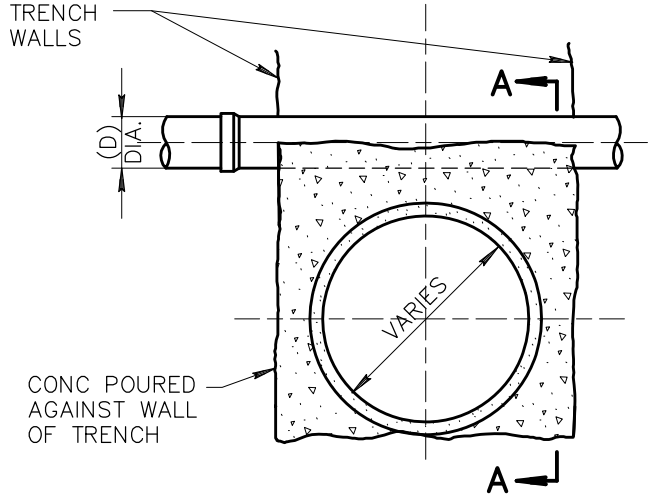

PIPE CONDUIT

TYPE 'A'

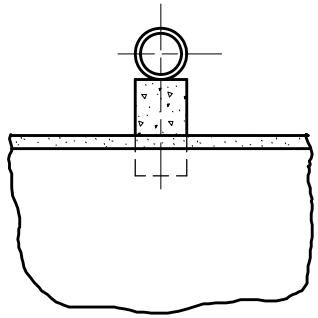

SECTION B–B

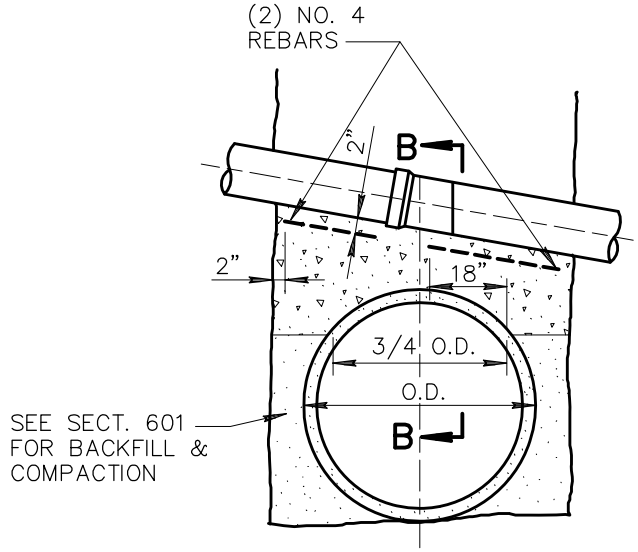

PIPE CONDUIT

TYPE 'B'

NOTES:

1. TYPE 'A' PIPE SUPPORT MAY BE USED FOR ANY TYPE CROSSING CONDITION.
2. TYPE 'C' PIPE SUPPORT MAY BE USED FOR CROSSING PIPES WITH A BELL DIAMETER OF 18" OR LESS IF SUFFICIENT CLEARANCE OVER STORM SEWER IS AVAILABLE AND TOTAL SPAN IS LESS THAN 34'
3. INTERMEDIATE PIPE SUPPORT SHALL BE USED IN CONJUNCTION WITH TYPE 'C' PIPE SUPPORT IF TOTAL SPAN EXCEEDS MAX. 'W' IN TABLE.
4. THE CONTRACTOR SHALL BE RESPONSIBLE FOR FURNISHING ALL SUPPORTS BOTH PERMANENT AND TEMPORARY. TEMPORARY SUPPORTS SHALL NOT BE A SEPARATE PAY ITEM.
5. PERMANENT PIPE SUPPORTS MAY BE DECREASED FROM PLAN QUANTITIES OR EXTENDED TO INCLUDE SOME LISTED BELOW AS TEMPORARY SUPPORTS IF CONDITIONS WARRANT THESE CHANGES AT THE TIME OF CONSTRUCTION. DECISION SHALL BE MADE BY THE ENGINEER.
6. WHEN TYPE 'A' PIPE SUPPORT IS USED AND WHENEVER SO DIRECTED BY THE ENGINEER, THE CONTRACTOR SHALL PIERCE THE WALL WITH SUITABLE OPENINGS TO PREVENT UNEQUAL PRESSURE RESULTING FROM FLOODING OF THE BACKFILL. THE VOLUME OF THE PIERCED OPENING SHALL NOT EXCEED 1/2 THE VOLUME OF THE SUPPORTING WALL.
7. USE TYPE 'B' PIPE SUPPORT INSTEAD OF TYPE 'C' WHEN CLEARANCE IS LESS THAN 'Y' IN TABLE, BETWEEN PIPES.
8. CLASS 'A' CONCRETE AS PER SECT. 725 UNLESS OTHERWISE NOTED.

SCHEDULE OF REQUIRED SUPPORTS

PERMANENT	TEMPORARY
SEWER LINES OTHER UTILITIES AS NOTED ON THE PLANS OR AS REQUIRED BY THE ENGINEER AT TIME OF CONSTRUCTION.	CAST IRON PIPE CONC. IRRIG. PIPE BURIED TELCO. GAS PIPES CONC. STORM DRAIN CONC. BOX CULVERT TRAFFIC CONTROL CONDUIT WATER & SEWER LINES

TABLE				
'W'	DEPTH OF COVER ON SUPPORTS			
	0' TO 8'		8' TO 16'	
	BAR NO.	Y	BAR NO.	Y
TO 6'	5	8"	6	11"
7'	5	9"	6	12"
8'	5	10"	6	13"
9'	6	11"	6	14"
10'	6	12"	7	15"
11'	6	13"	7	16"
12'	6	14"	7	17"
13'	7	15"	7	19"
14'	7	16"	8	20"
15'	7	17"	8	21"
16'	7	18"		
17'	8	19"		

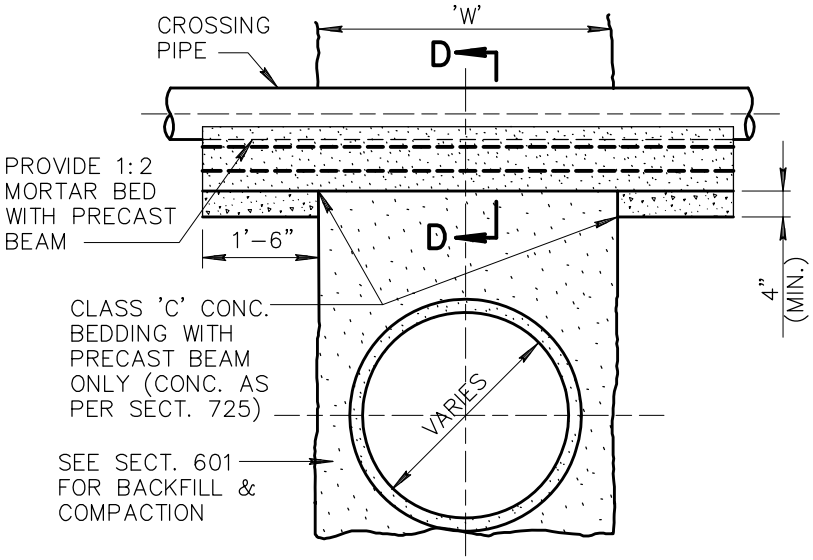

TYPE 'C'

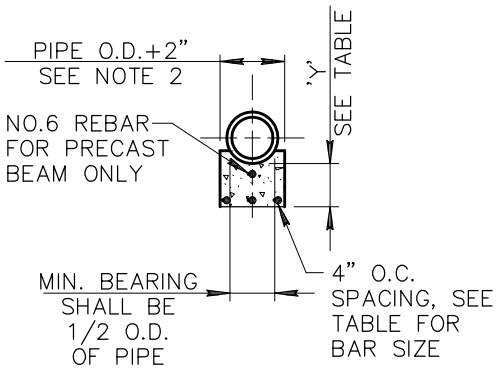

SECTION D-D

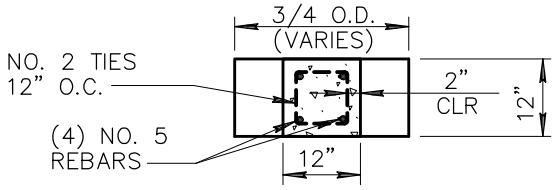

SECTION C-C

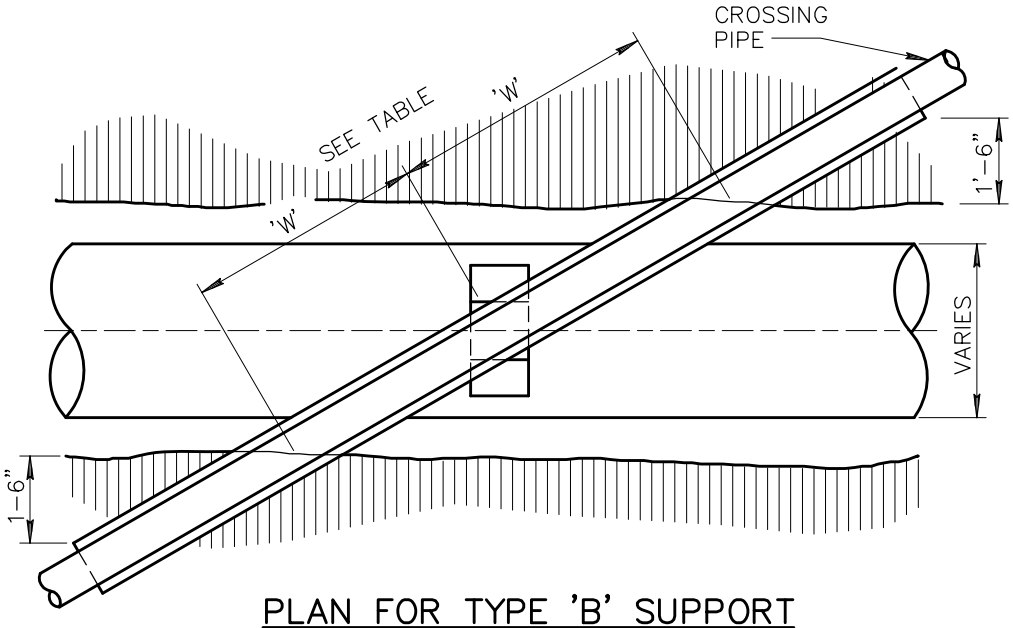

PLAN FOR TYPE 'B' SUPPORT

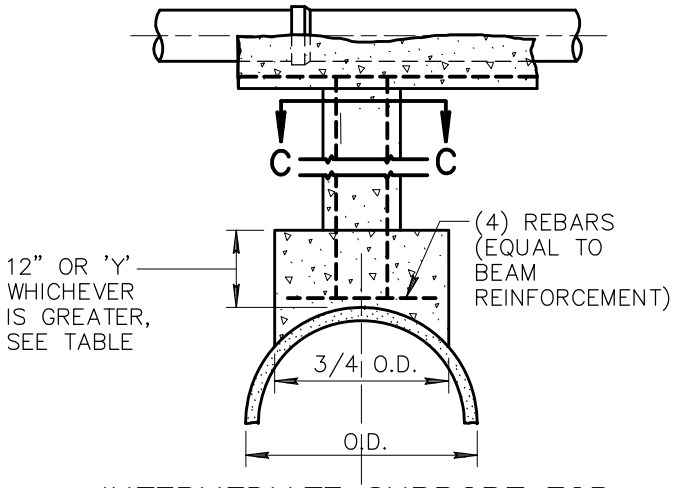

INTERMEDIATE SUPPORT FOR TYPE 'B' CROSSINGS

DETAIL NO.		STANDARD DETAIL		REVISED	DETAIL NO.
403-2	MARICOPA ASSOCIATION of GOVERNMENTS	ENGLISH	PIPE SUPPORTS ACROSS TRENCHES	01-01-1998	403-2

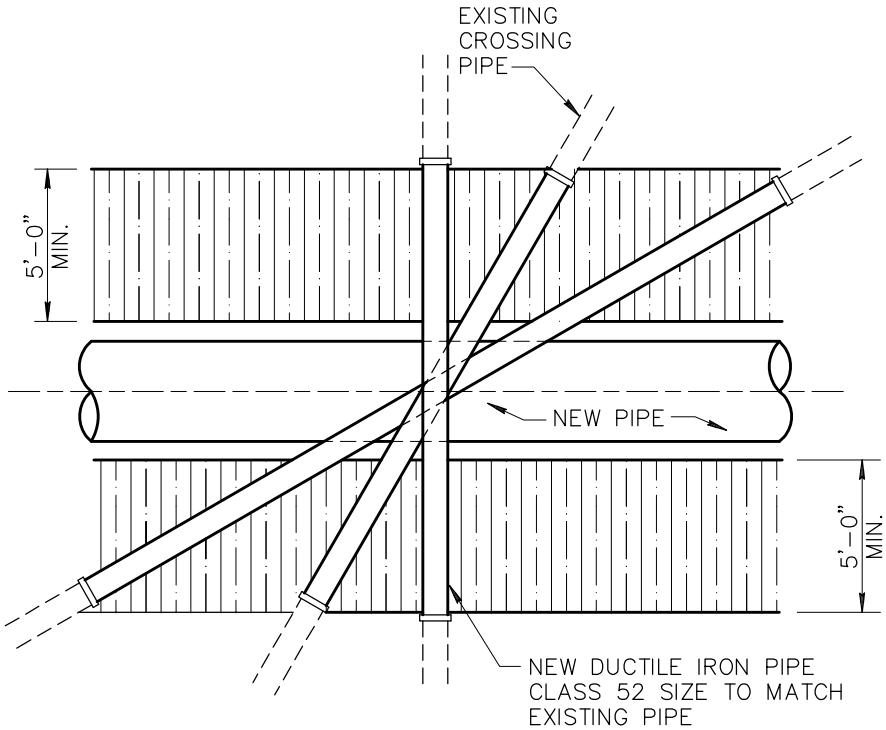

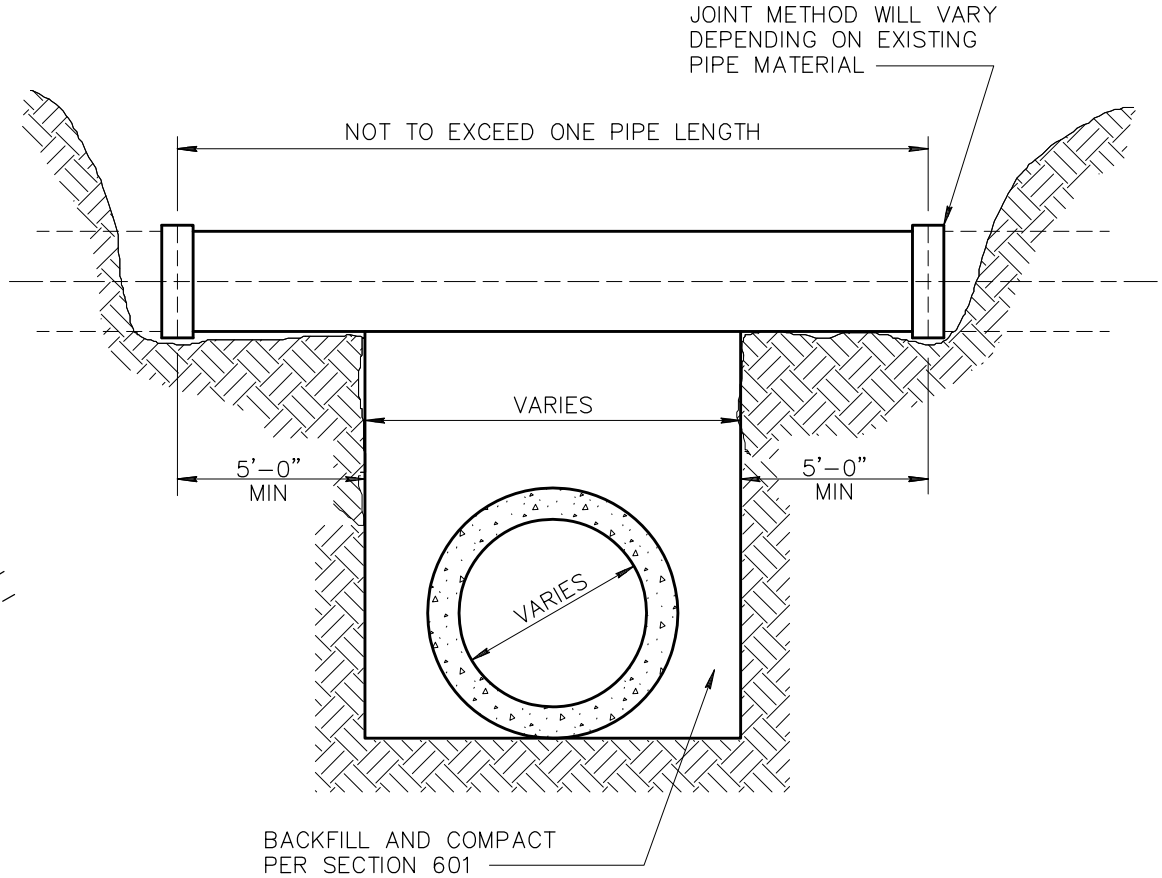

DETAIL NO.				REVISED	DETAIL NO.
403-3	MARICOPA ASSOCIATION of GOVERNMENTS	STANDARD DETAIL ENGLISH	ALTERNATE TO PIPE SUPPORT	01-01-1998	403-3

WATER LINE EXCLUSION AND EXTRA PROTECTION ZONES*

GRAVITY SANITARY SEWER

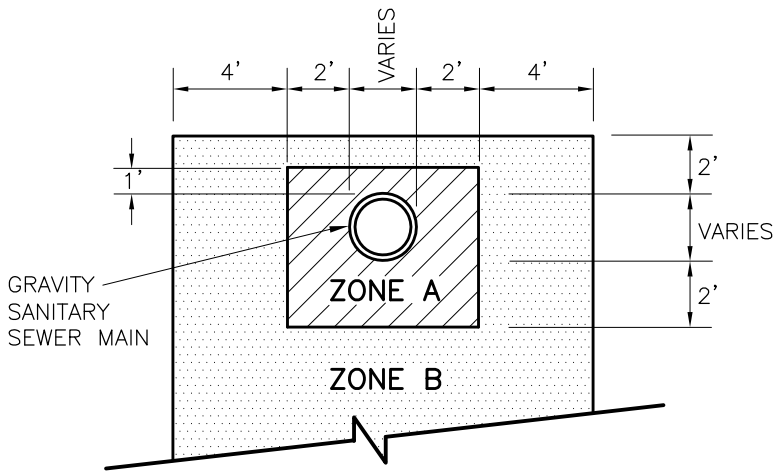

PRESSURIZED SANITARY SEWER

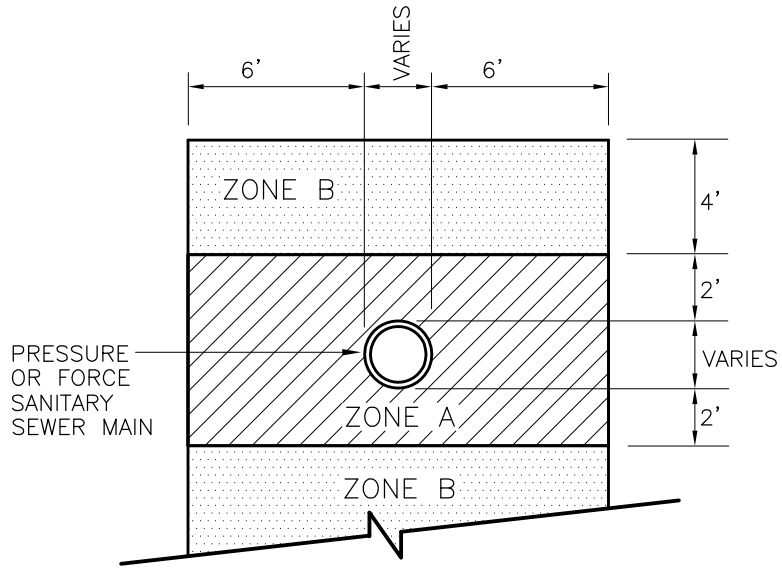

NOTES:

ZONE A: NO WATER LINES ALLOWED/MINIMUM SEPARATION.

ZONE B: EXTRA PROTECTION REQUIRED FOR WATER LINES.

* REFER TO STANDARD 610, WATER LINE CONSTRUCTION.

DETAIL NO.				REVISED	DETAIL NO.
404–1	MARICOPA ASSOCIATION of GOVERNMENTS	STANDARD DETAIL ENGLISH	WATER AND SANITARY SEWER SEPARATION/PROTECTION	01–01–2006	404–1

WATER LINE EXTRA PROTECTION

DUCTILE IRON PIPE WITH RESTRAINED OR MECHANICAL JOINTS*

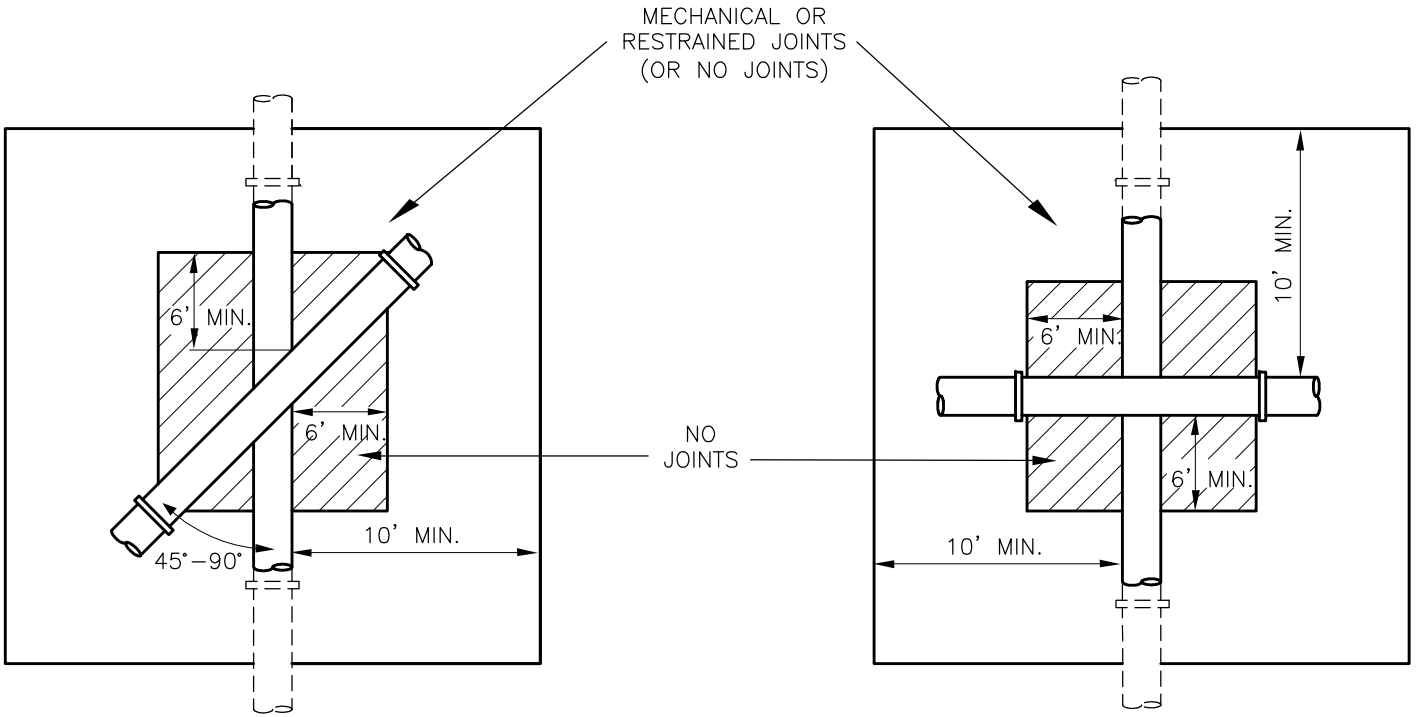

EXTRA PROTECTION DUCTILE IRON PIPE
(GRAVITY OR PRESSURIZED) SEWER LINE

NOTES:

* REFER TO MAG STANDARD SPECIFICATION SECTION 610.

DETAIL NO.		STANDARD DETAIL		REVISED	DETAIL NO.
404–2	MARICOPA ASSOCIATION of GOVERNMENTS	ENGLISH	WATER AND SANITARY SEWER SEPARATION/PROTECTION	01–01–2006	404–2

ENCASEMENT FOR PIPE CROSSING*

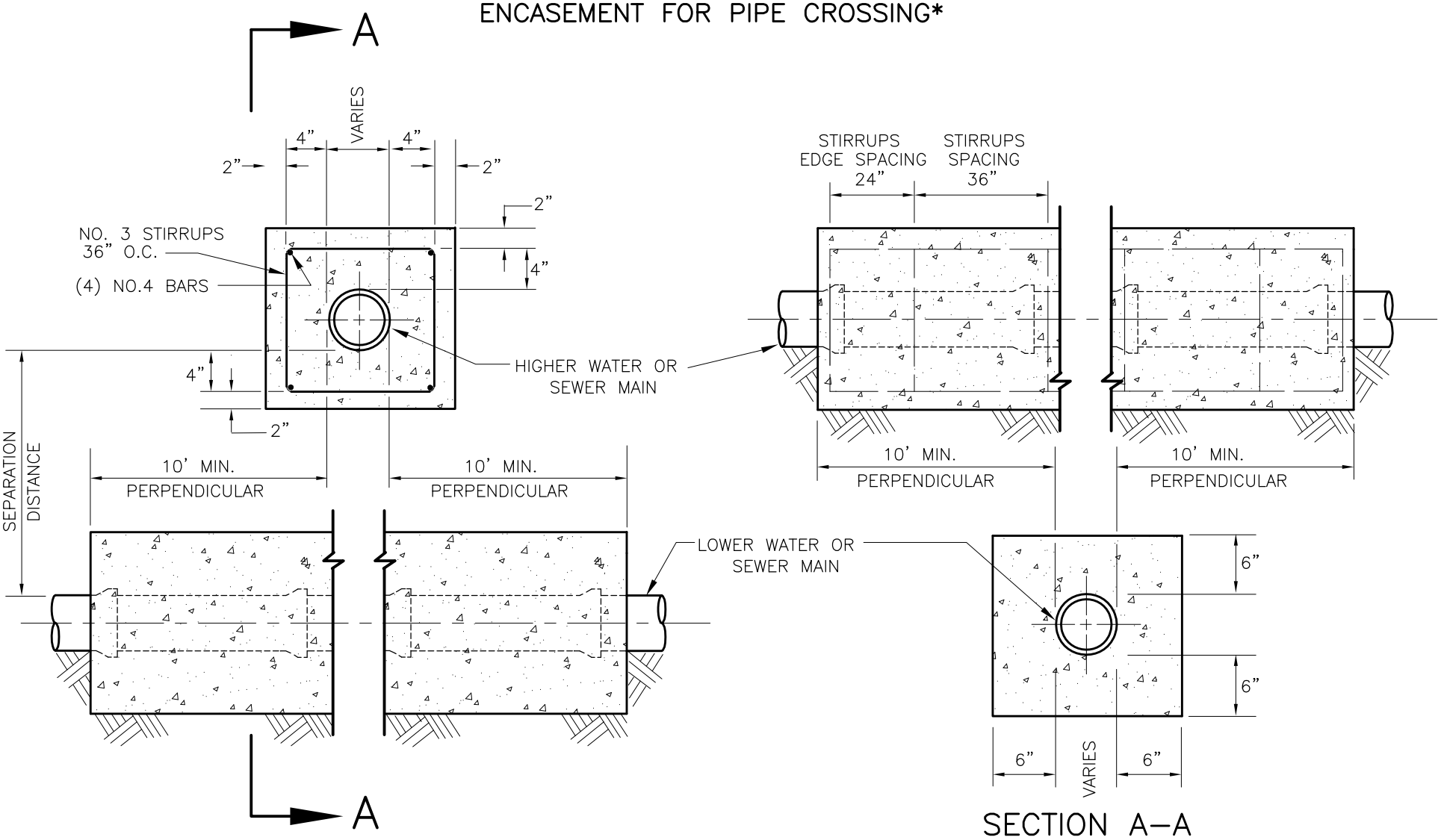

SECTION A–A

NOTES:

1. CLASS 'C' CONCRETE AS PER SECTION 725.

*REFER TO MAG STANDARD SPECIFICATION SECTION 610.

DETAIL NO.		STANDARD DETAIL		REVISED	DETAIL NO.
404–3	MARICOPA ASSOCIATION of GOVERNMENTS	ENGLISH	WATER AND SANITARY SEWER SEPARATION/PROTECTION	01–01–2006	404–3

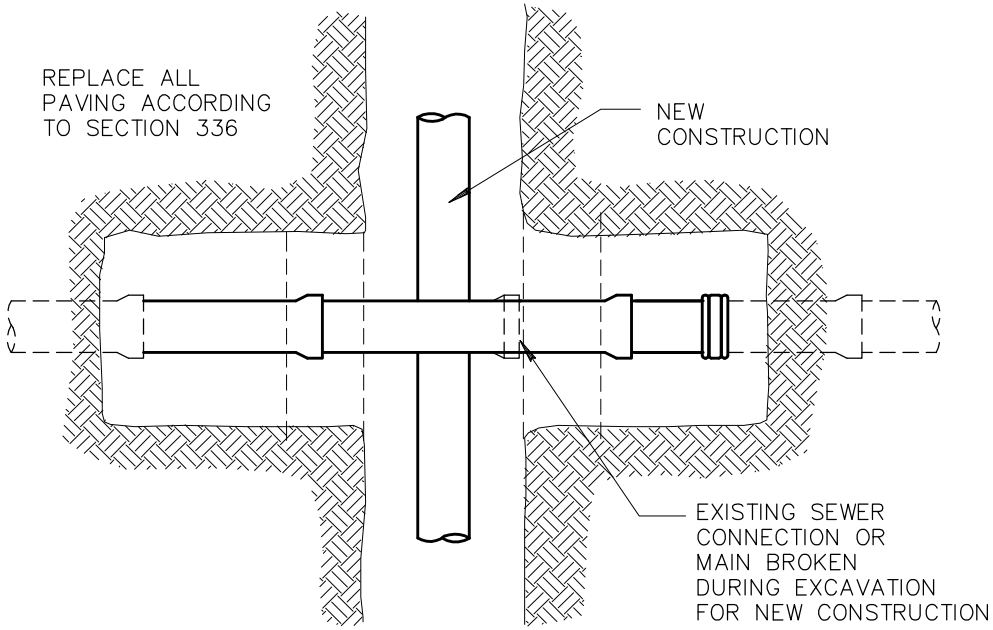

PLAN VIEW OF REPLACEMENT

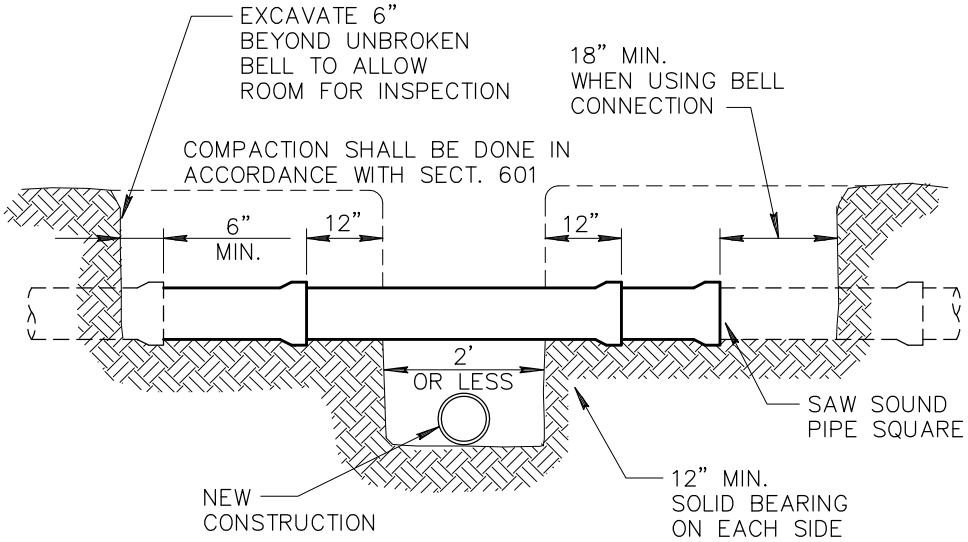

REPLACEMENT WHEN NEW TRENCH 2' WIDE OR LESS

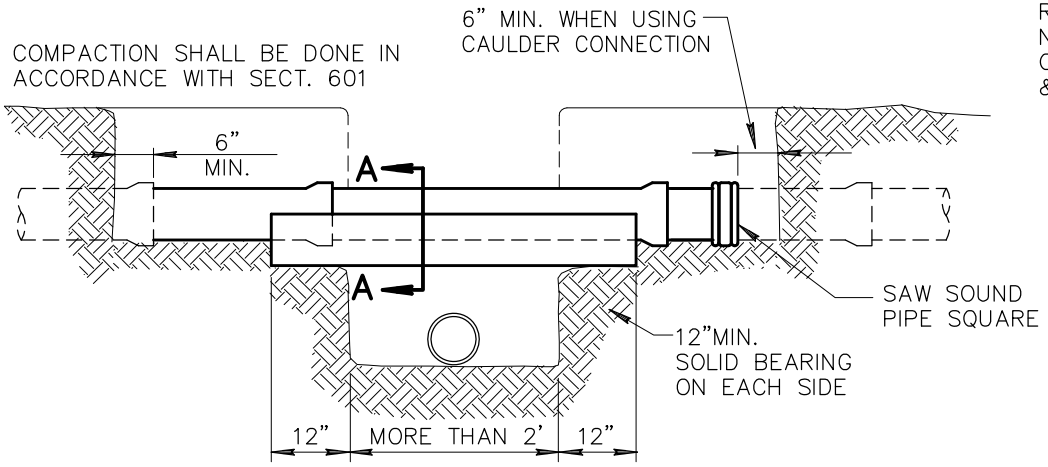

REPLACEMENT WHEN NEW TRENCH MORE THAN 2' WIDE

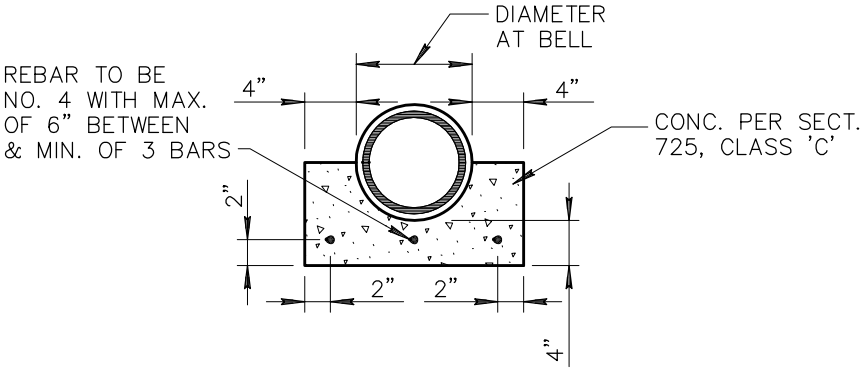

SECTION 'A–A'

NOTES:

1. BROKEN PIPE SHALL BE REPLACED WITH A MINIMUM OF ONE FULL JOINT AND TWO SHORT LENGTHS WITH UNBROKEN BELLS. CONSTRUCTION AND JOINTS TO BE MADE AS PER SECTION 615.

DETAIL NO.		STANDARD DETAIL		REVISED	DETAIL NO.
405	MARICOPA ASSOCIATION of GOVERNMENTS	ENGLISH	BROKEN SEWER LINE REPLACEMENT	01–01–1998	405

TYPE 'A' TOP

(PRECAST ECCENTRIC CONICAL TOP MANHOLE)

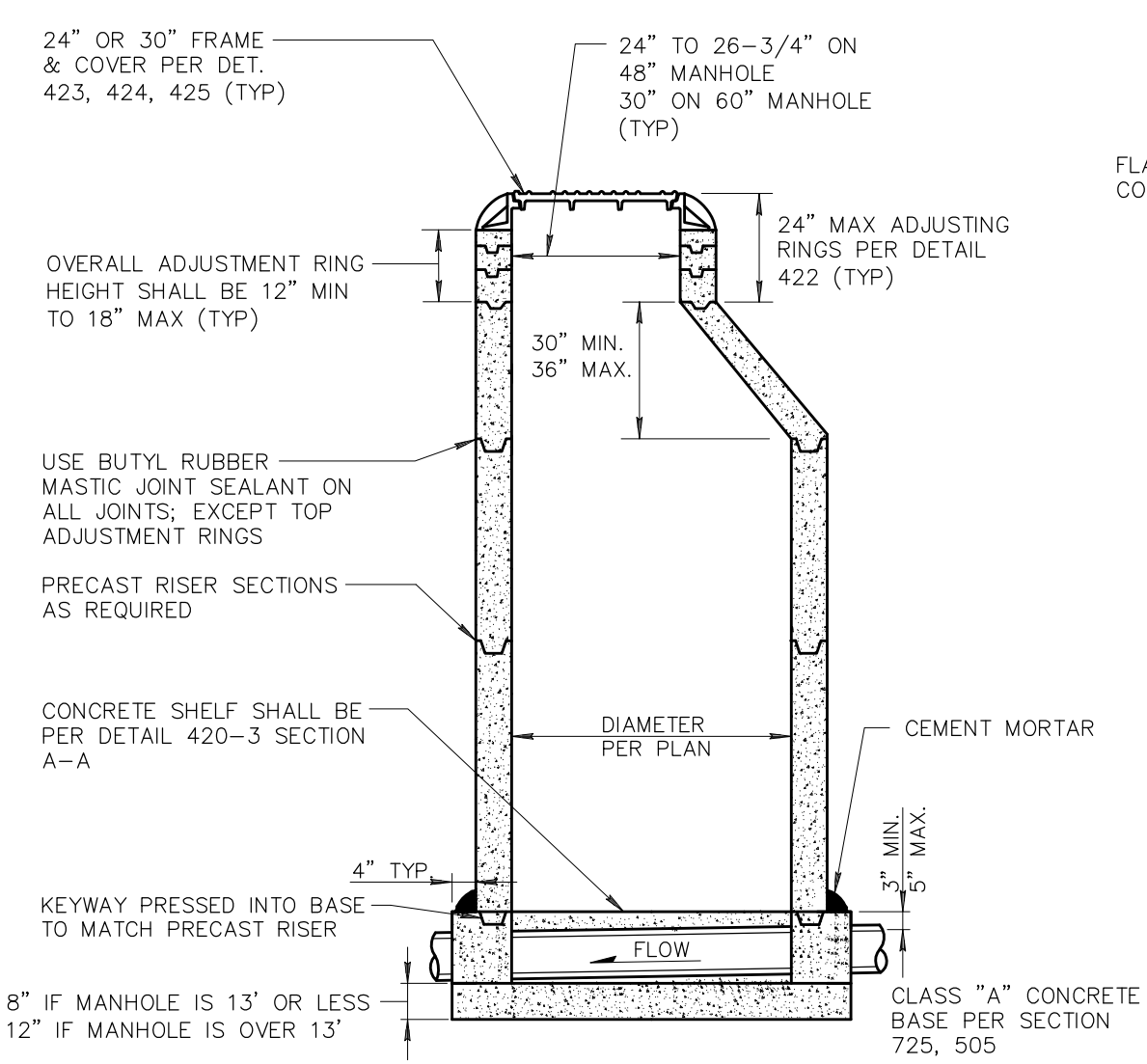

(PRECAST FLAT TOP M.H.)

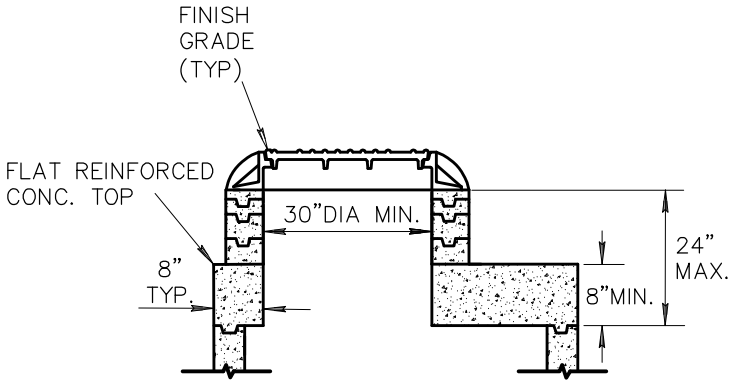

NOTES:

1. PRECAST STEEL REINFORCED MANHOLE SECTIONS SHALL BE MANUFACTURED IN ACCORDANCE WITH ASTM C 478 EXCEPT AS MODIFIED HEREIN.
2. CAST-IN-PLACE MANHOLE BASE TO BE CONSTRUCTED IN ONE PLACEMENT.
3. CAST-IN-PLACE MANHOLE BASE SHELF AND CHANNEL TO RECEIVE SMOOTH TROWEL FINISH.
4. MANHOLE COATINGS PER AGENCY.
5. SEE MAG DETAIL 422 FOR FINAL ADJUSTMENT TO GRADE.
6. ANY MANHOLE OVER 20' SHALL REQUIRE ENGINEER (STRUCTURAL) CALCS.
7. THE MANHOLE ACCESS POINT SHALL BE ORIENTED IN SUCH A WAY THAT THE OPENING IS DIRECTLY ABOVE THE LOWEST INVERT, OR AS OTHERWISE DIRECTED BY THE PLANS OR ENG.
8. FOR PRECAST BASE SEE DETAIL 420-2.
9. FLAT TOPS SHALL ONLY BE USED WITH APPROVAL FROM THE ENGINEER.

DETAIL NO.				REVISED	DETAIL NO.
420-1	MARICOPA ASSOCIATION of GOVERNMENTS	STANDARD DETAIL ENGLISH	CONCRETE SANITARY SEWER MANHOLE	01-01-2015	420-1

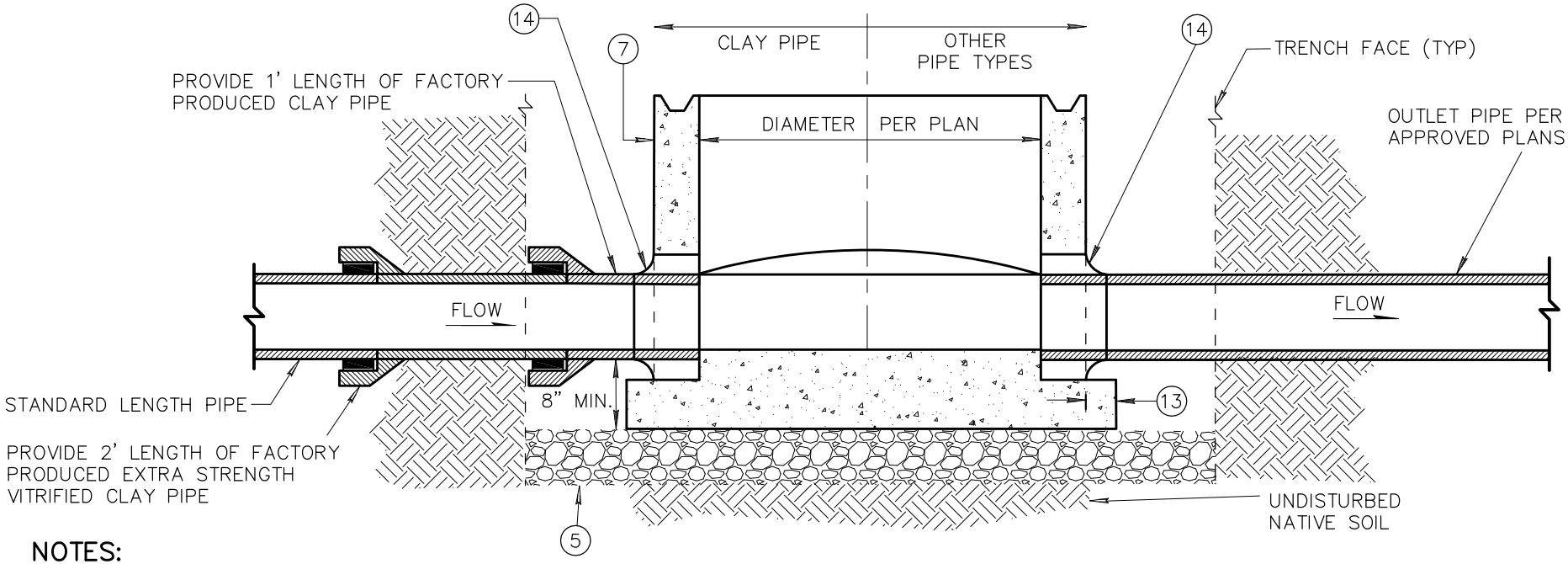

NOTES:

1. PRECAST, MANUFACTURER SHALL BE AN NATIONAL PRECAST CONCRETE ASSOCIATION (NPCA) CERTIFIED PLANT. ENTIRE PRECAST BASE SHALL BE MANUFACTURED AT THE PLANT PER ASTM C478.
2. MAG "AA" 4000 PSI CONCRETE SHALL BE USED FOR PRECAST MANHOLE BASES.
3. SPRING LINE OF CAST-IN-PLACE BELL SHALL STOP AT INSIDE FACE OF MANHOLE.
4. JOINTS FOR BARREL SECTION SHALL BE TONGUE AND GROOVE TYPE. ALL LIFTING HOLES SHALL BE SEALED WITH GROUT.
5. ALL PRECAST MANHOLE BASES SHALL BE PLACED ON 8" MINIMUM OF ABC PER SECTION 702 COMPACTED TO 100% MAXIMUM DENSITY.
6. ALL MODIFICATIONS SHALL BE APPROVED BY THE ENGINEER.
7. MINIMUM WALL THICKNESS SHALL BE PER ASTM C478 (MIN 5").
8. REINFORCEMENT SHALL BE DESIGNED BY AN ARIZONA REGISTERED PROFESSIONAL ENGINEER.
9. CHANNEL TRANSITION SHALL BE CONSTANT FROM INLET TO OUTLET OF MANHOLE TO FACILITATE SMOOTH TRANSITIONS AND ACCOMMODATE CORRESPONDING MANDREL.
10. THERE SHALL BE NO HARD CONNECTIONS (GROUTED) INTO THE MANHOLE BASE UNLESS APPROVED BY THE ENGINEER.
11. ALL SEWER SERVICE CONNECTIONS SHALL HAVE THE SAME CONNECTION TYPES IN THE PRECAST MANHOLE BASE.
12. ALL CORE HOLES INTO THIS STRUCTURAL PRECAST BASE SHALL BE COATED WITH AN APPROVED COATING MATERIAL.
13. THE MANHOLE BOTTOM SHALL EXTEND OUTSIDE THE MANHOLE WALL A MINIMUM 6" WIDE ON 48" BASES, 7" WIDE ON 60" BASES, AND 8" WIDE ON 72" BASES. EXTENDED BOTTOM SHALL BE A MINIMUM OF 5" THICK.
14. ALL PIPE CONNECTIONS SHALL BE IN COMPLIANCE WITH ASTM F477 OR ASTM C425. AN EXTRA STRENGTH VCP BELL WITH A POLYURETHANE JOINT THAT MEETS ASTM C425 MAY BE USED WITH VCP.

DETAIL NO.				REVISED	DETAIL NO.
420-2	MARICOPA ASSOCIATION of GOVERNMENTS	STANDARD DETAIL ENGLISH	PRECAST CONCRETE MANHOLE BASE	01-01-2015	420-2

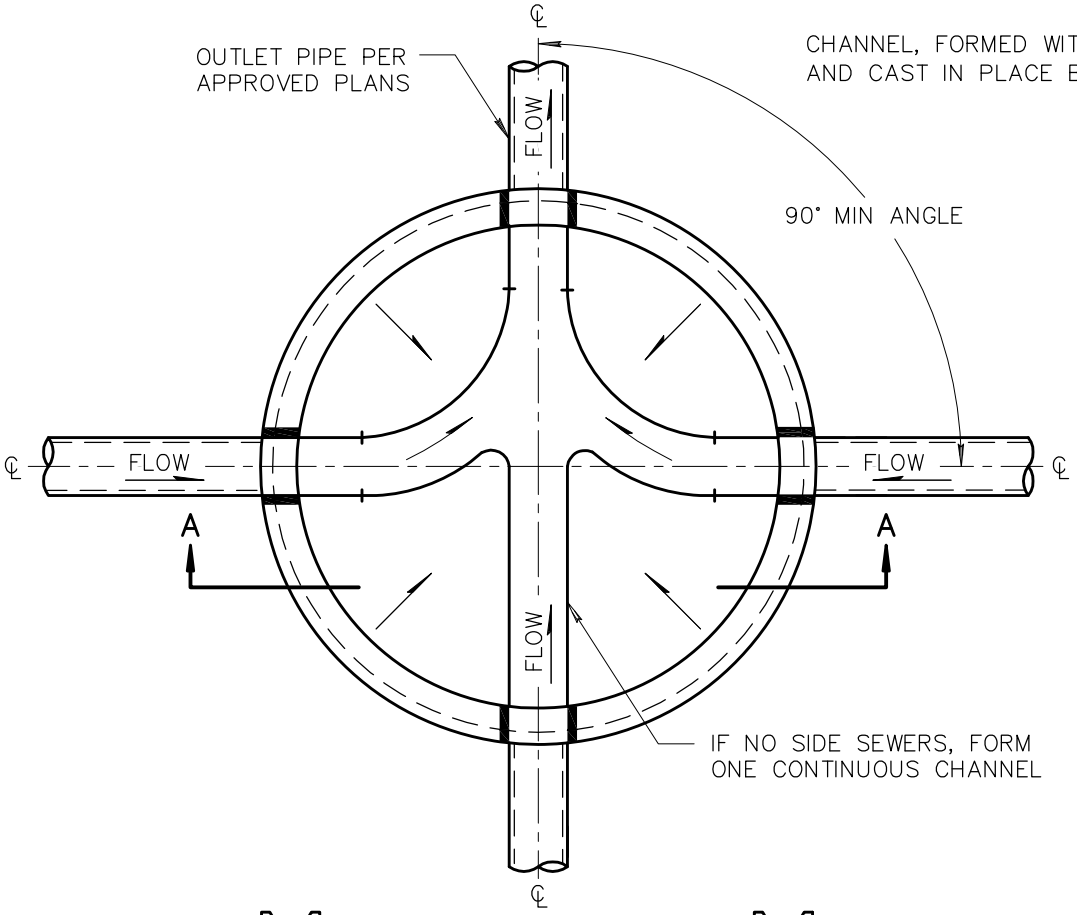

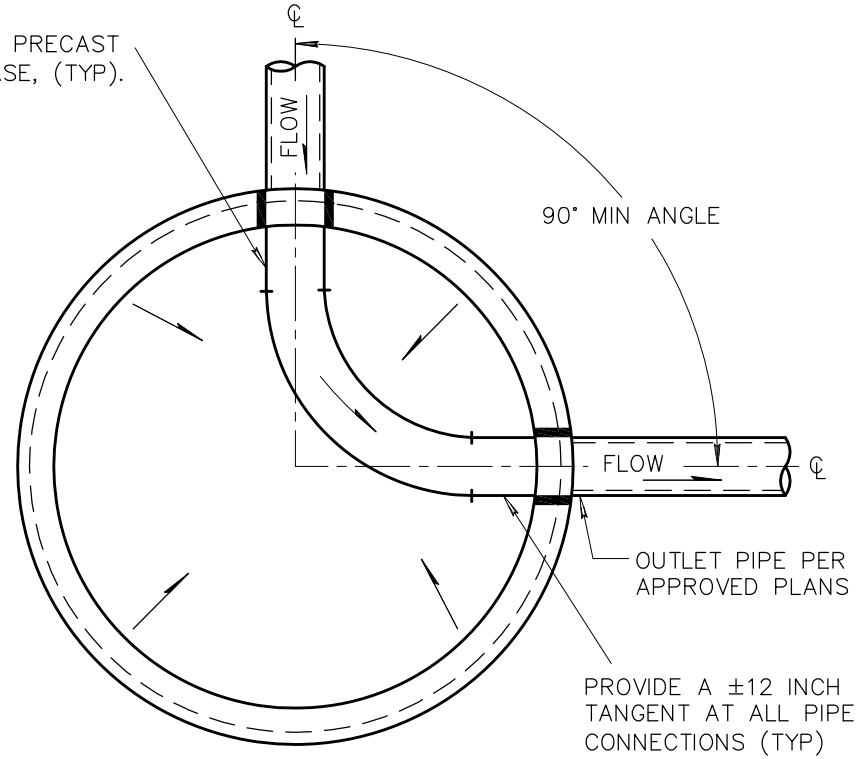

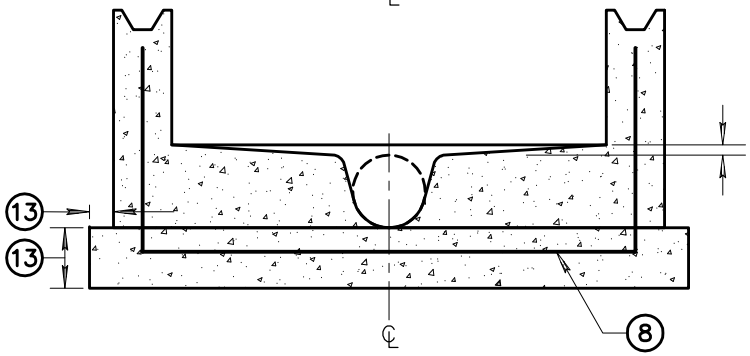

SECTION A–A

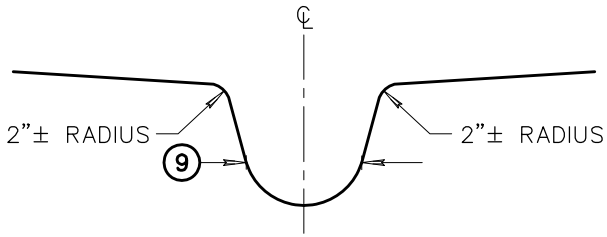

CHANNEL TRANSITION SHALL BE CONSISTENT FROM INLET TO OUTLET OF MANHOLE TO FACILITATE SMOOTH TRANSITIONS AND ACCOMMODATE CORRESPONDING MANDREL.

TYPICAL CHANNEL

SEE DETAIL 420–2 FOR NOTES

DETAIL NO.		STANDARD DETAIL		REVISED	DETAIL NO.
420-3	MARICOPA ASSOCIATION of GOVERNMENTS	ENGLISH	CONCRETE MANHOLE BASE	01-01-2015	420-3

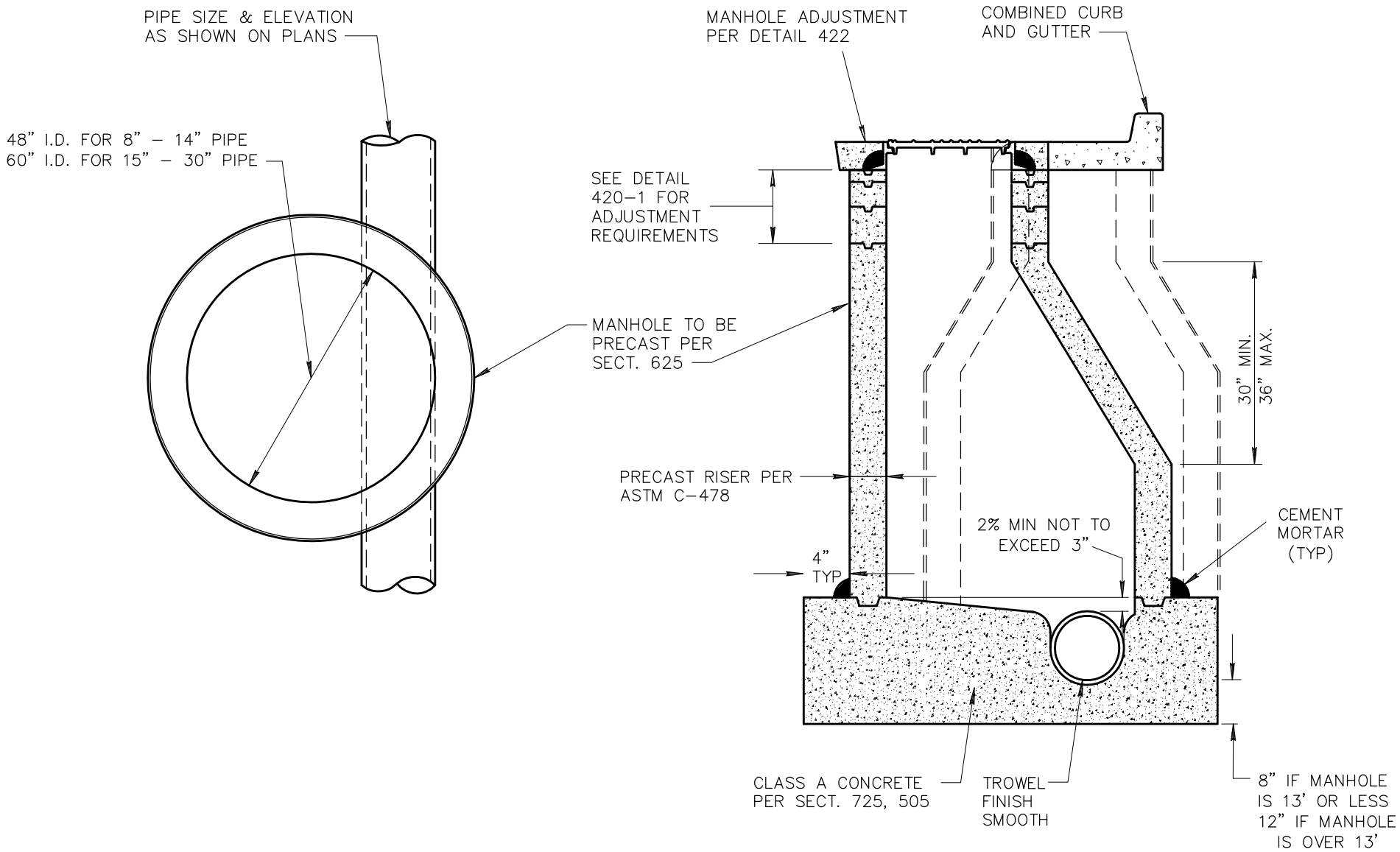

DETAIL NO.				REVISED	DETAIL NO.
421	MARICOPA ASSOCIATION of GOVERNMENTS	STANDARD DETAIL ENGLISH	OFFSET MANHOLE 8" TO 30" PIPE	01–01–2015	421

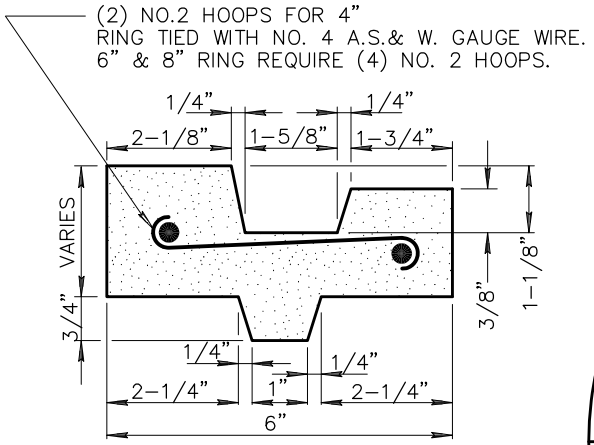

ADJUSTING RING DETAIL

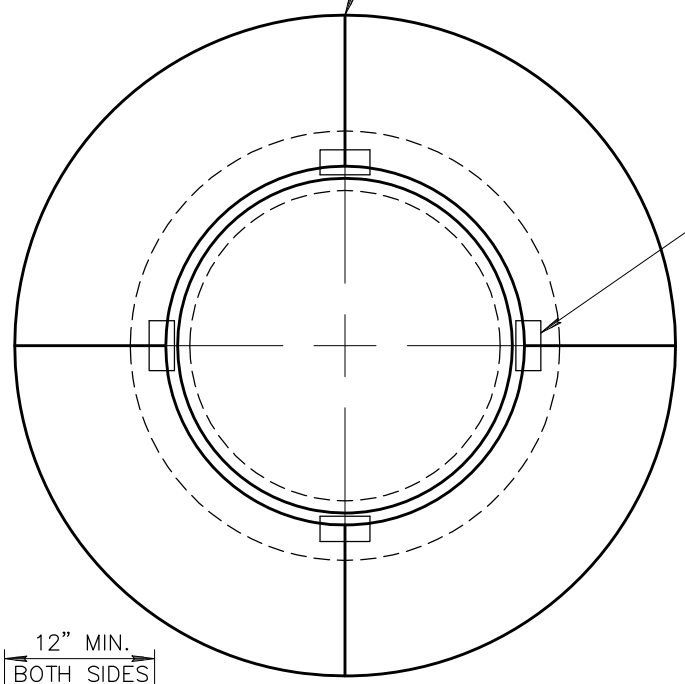

NOTES:

1. CONTRACTORS SHALL ADJUST ALL MANHOLE RINGS AND COVERS, INCLUDING MANHOLES OUTSIDE OF THE PAVEMENT.
2. ADJUSTMENT SHALL BE CONSTRUCTED PER MAG SECTION 345.
3. MANHOLE COATINGS PER AGENCY
4. GROUT SHALL BE USED BETWEEN FRAME AND ADJUSTING RING TO ACHIEVE WATER TIGHTNESS.

SPACER TYPE	REQUIRED THICKNESS
BRICK	GREATER THAN 2"
4"X2" STEEL SPACER	½" TO 2"
GROUT	LESS THAN ½"

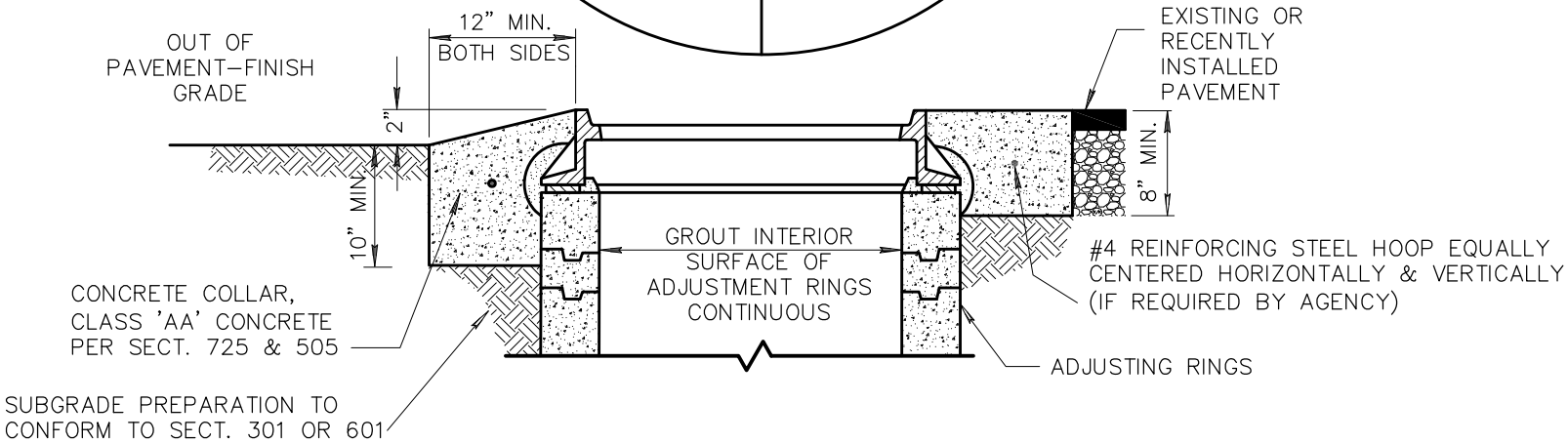

DETAIL NO.		STANDARD DETAIL		REVISED	DETAIL NO.
422	MARICOPA ASSOCIATION of GOVERNMENTS	ENGLISH	MANHOLE FRAME AND COVER ADJUSTMENT	01-01-2015	422

FRAME TOP VIEW

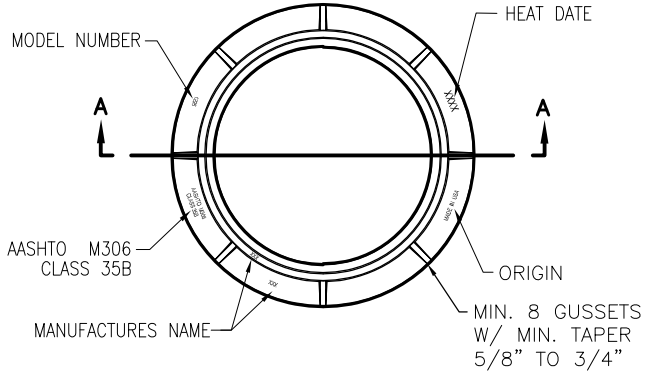

COVER TOP VIEW

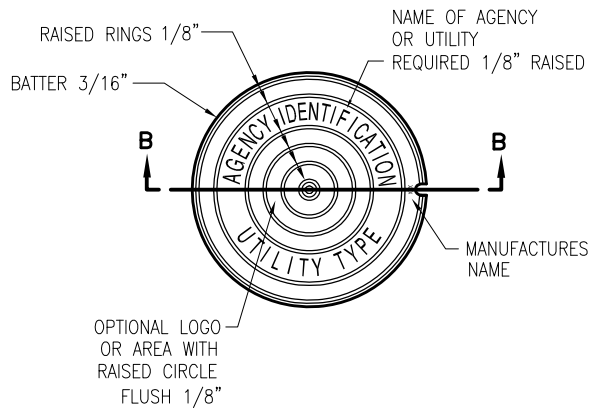

COVER BOTTOM VIEW

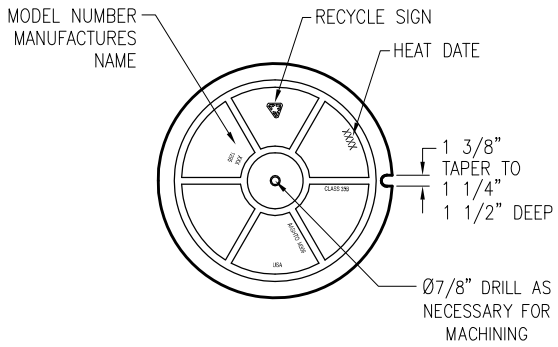

FRAME WT. (CL. 35) – 180 LBS

COVER WT. (CL. 35) – 188 LBS

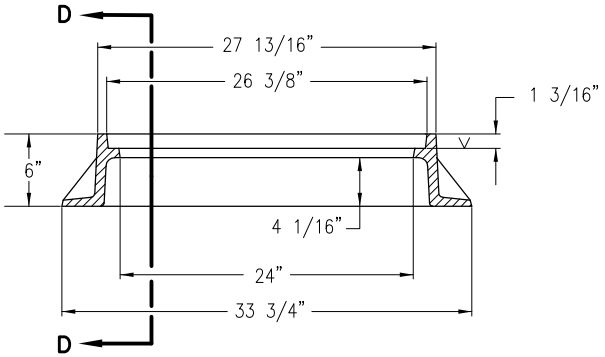

SECTION A

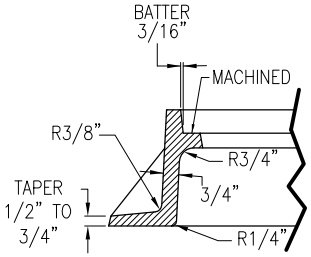

SECTION D

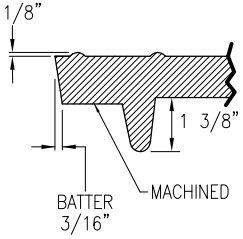

SECTION C

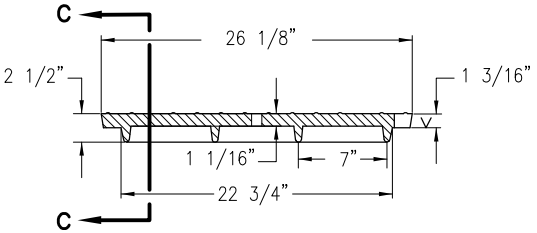

SECTION B

NOTE:

LETTERING ON MANHOLE COVER TO CONTAIN NAME OF AGENCY AND UTILITY FOR WHICH MANHOLE IS NEEDED, (I.E. "PHOENIX SANITARY SEWER"), OR AS DIRECTED. THE TOTAL WIDTH OF INDIVIDUAL LETTERS TO BE SUCH THAT LETTERS AND WORDS ARE EQUALLY SPACED AND BALANCED TO FORM A COMPLETE CIRCLE WITH SPACERS BEFORE AND AFTER THE WORD IDENTIFYING THE AGENCY INVOLVED. LETTERS TO BE 2" IN HEIGHT AND RAISED FLUSH W/ TOP OF RINGS. TYPE OF LETTERS TO BE SUBMITTED FOR APPROVAL. WEIGHT OF CASTINGS SHALL BE NO MORE THAN 2% MORE OR LESS THAN THE APPROXIMATE WEIGHT SPECIFIED. CASTINGS SHALL CONFORM TO ASTM A–48, CLASS 35 AND AASHTO M306. THE BEARING SURFACES OF THE FRAMES AND COVERS SHALL BE MACHINED AND THE COVERS SHALL SEAT FIRMLY WITHOUT ROCKING. ALL DIMENSIONS SHALL HAVE A 1/16" TOLERANCE.

DETAIL NO.				REVISED	DETAIL NO.
423–1	MARICOPA ASSOCIATION of GOVERNMENTS	STANDARD DETAIL ENGLISH	24" CAST IRON MANHOLE FRAME AND COVER	01–01–2012	423–1

FRAME TOP VIEW

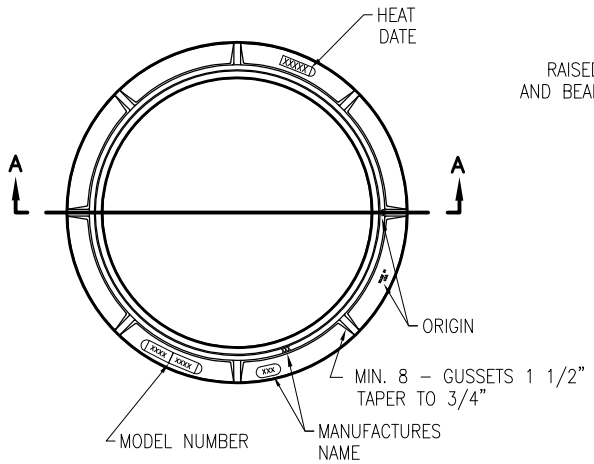

FRAME WT. (CL. 35) – 227 LBS

COVER TOP VIEW

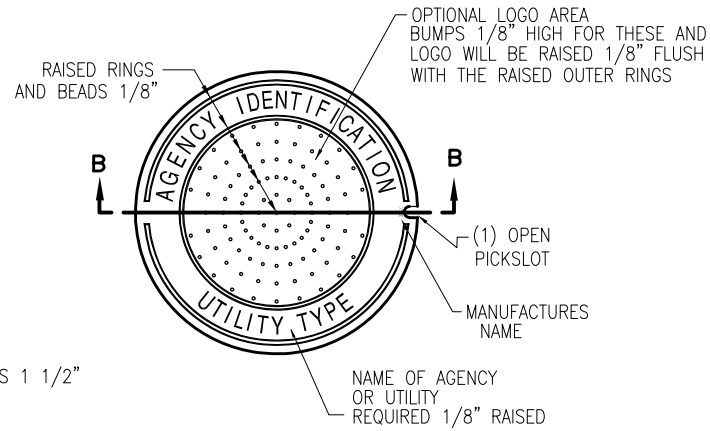

COVER BOTTOM VIEW

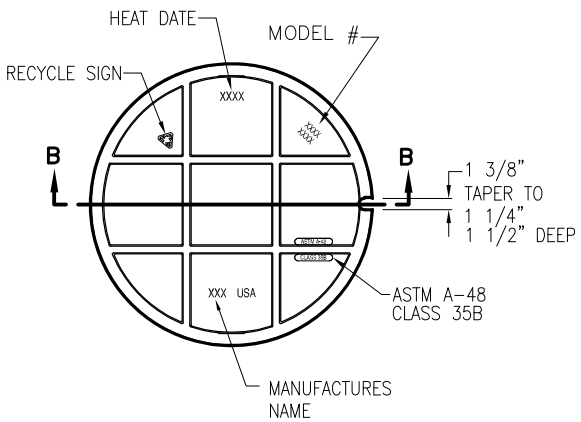

COVER WT. (CL. 35) – 210 LBS

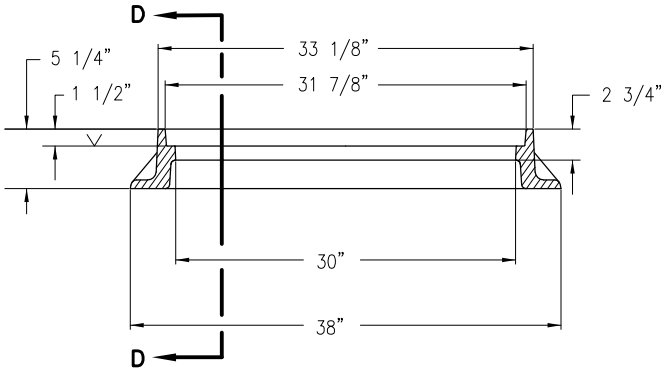

SECTION A

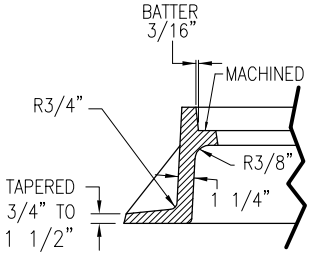

SECTION D

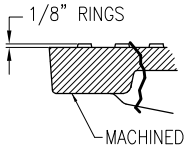

SECTION C

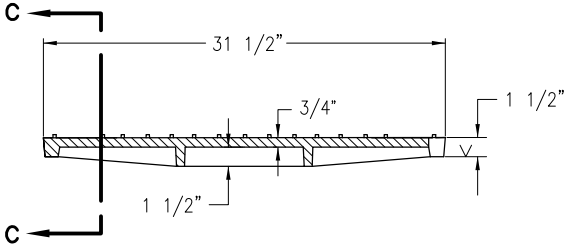

SECTION B

NOTE:

LETTERING ON MANHOLE COVER TO CONTAIN NAME OF AGENCY AND UTILITY FOR WHICH MANHOLE IS NEEDED, (I.E. "PHOENIX SANITARY SEWER"), OR AS DIRECTED. THE TOTAL WIDTH OF INDIVIDUAL LETTERS TO BE SUCH THAT LETTERS AND WORDS ARE EQUALLY SPACED AND BALANCED TO FORM A COMPLETE CIRCLE WITH SPACERS BEFORE AND AFTER THE WORD IDENTIFYING THE AGENCY INVOLVED. LETTERS TO BE 2" IN HEIGHT AND RAISED FLUSH W/ TOP OF COVER. TYPE OF LETTERS TO BE SUBMITTED FOR APPROVAL. WEIGHT OF CASTINGS SHALL BE NO MORE THAN 2% MORE OR LESS THAN THE APPROXIMATE WEIGHT SPECIFIED. CASTINGS SHALL CONFORM TO ASTM A-48, CLASS 35 AND AASHTO M306. THE BEARING SURFACES OF THE FRAMES AND COVERS SHALL BE MACHINED AND THE COVERS SHALL SEAT FIRMLY WITHOUT ROCKING. ALL DIMENSIONS SHALL HAVE A 1/16" TOLERANCE.

DETAIL NO.				REVISED	DETAIL NO.
423-2	MARICOPA ASSOCIATION of GOVERNMENTS	STANDARD DETAIL ENGLISH	30" CAST IRON MANHOLE FRAME AND COVER	01-01-2012	423-2

FRAME TOP VIEW

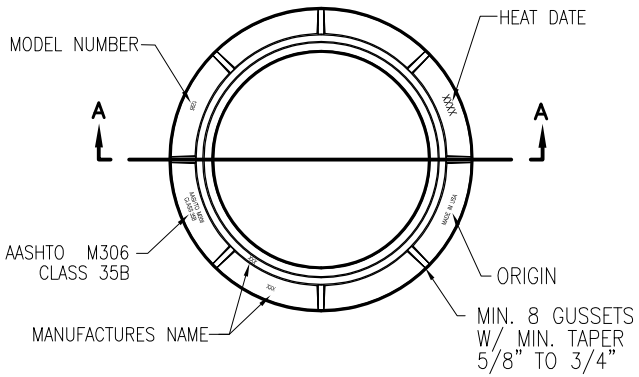

FRAME WT. (CL. 35) – 180 LBS

COVER TOP VIEW

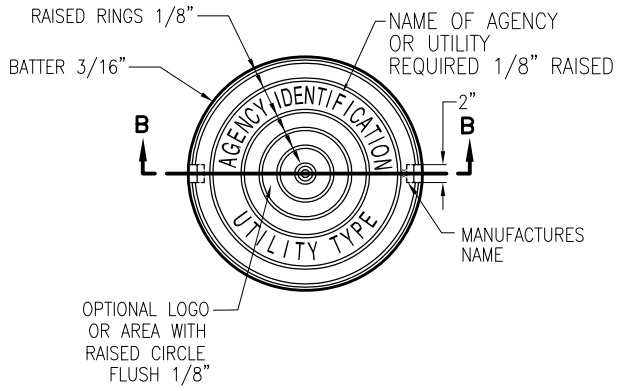

COVER BOTTOM VIEW

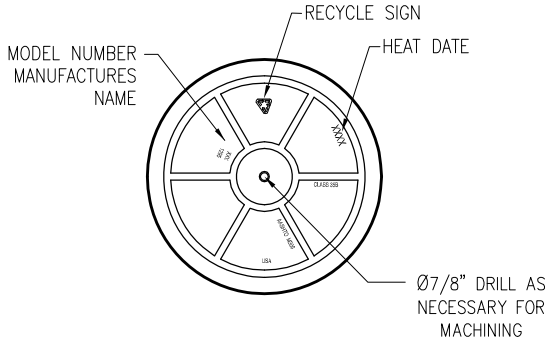

COVER WT. (CL. 35) – 188 LBS

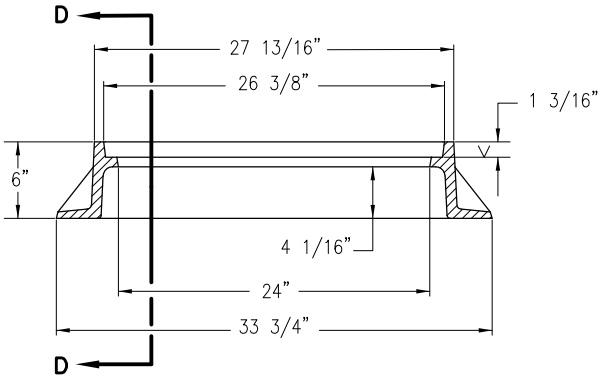

SECTION A

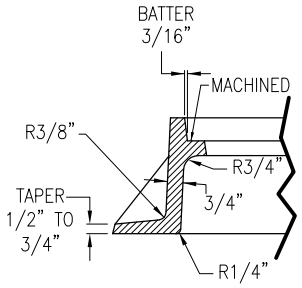

SECTION D

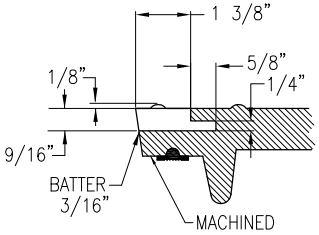

CONCEALED PICK DETAIL
WITH GASKET

SECTION C

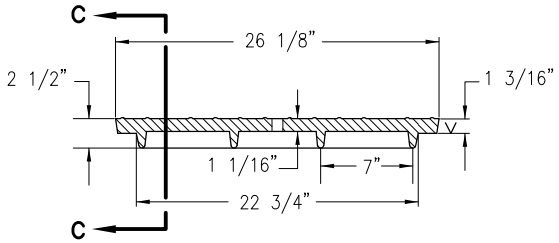

SECTION B

NOTE:

LETTERING ON MANHOLE COVER TO CONTAIN NAME OF AGENCY AND UTILITY FOR WHICH MANHOLE IS NEEDED, (I.E. "PHOENIX SANITARY SEWER"), OR AS DIRECTED. THE TOTAL WIDTH OF INDIVIDUAL LETTERS TO BE SUCH THAT LETTERS AND WORDS ARE EQUALLY SPACED AND BALANCED TO FORM A COMPLETE CIRCLE WITH SPACERS BEFORE AND AFTER THE WORD IDENTIFYING THE AGENCY INVOLVED. LETTERS TO BE 2" IN HEIGHT AND RAISED FLUSH W/ TOP OF COVER. TYPE OF LETTERS TO BE SUBMITTED FOR APPROVAL. WEIGHT OF CASTINGS SHALL BE NO MORE THAN 2% MORE OR LESS THAN THE APPROXIMATE WEIGHT SPECIFIED. CASTINGS SHALL CONFORM TO ASTM A–48, CLASS 35 AND AASHTO M306. THE BEARING SURFACES OF THE FRAMES AND COVERS SHALL BE MACHINED AND THE COVERS SHALL SEAT FIRMLY WITHOUT ROCKING. ALL DIMENSIONS SHALL HAVE A 1/16" TOLERANCE.

DETAIL NO.				REVISED	DETAIL NO.
424–1	MARICOPA ASSOCIATION of GOVERNMENTS	STANDARD DETAIL ENGLISH	24" CAST IRON WATERTIGHT MANHOLE FRAME AND COVER	01–01–2012	424–1

FRAME TOP VIEW

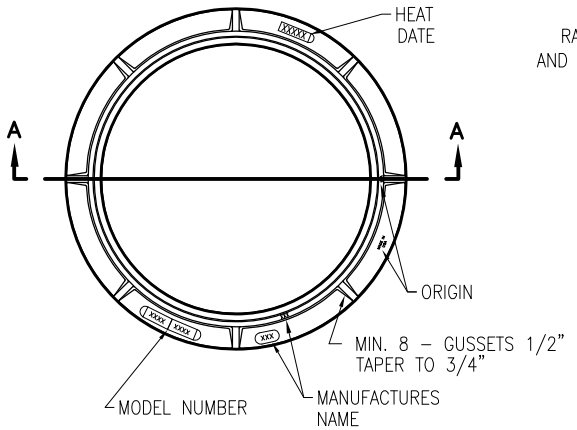

FRAME WT. (CL. 35) – 227 LBS

COVER TOP VIEW

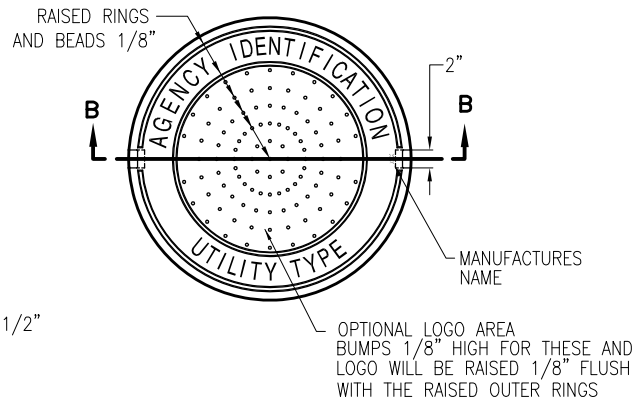

COVER BOTTOM VIEW

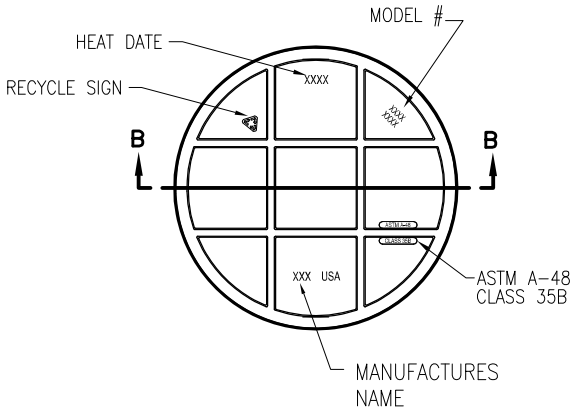

COVER WT. (CL. 35) – 210 LBS

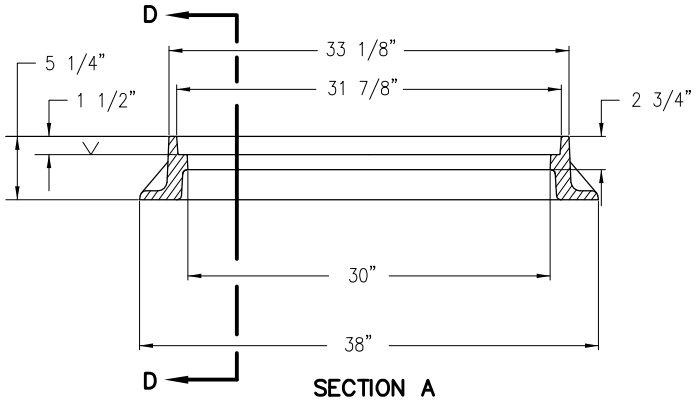

SECTION A

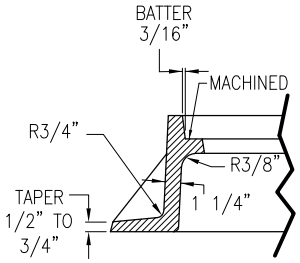

SECTION D

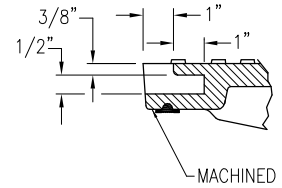

CONCEALED PICKHOLE DETAIL WITH GASKET

SECTION C

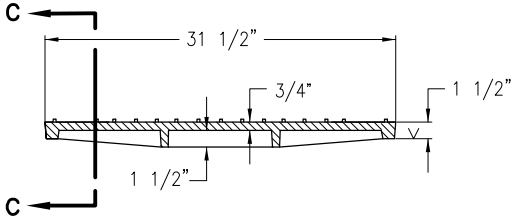

SECTION B

NOTE:

LETTERING ON MANHOLE COVER TO CONTAIN NAME OF AGENCY AND UTILITY FOR WHICH MANHOLE IS NEEDED, (I.E. "PHOENIX SANITARY SEWER"), OR AS DIRECTED. THE TOTAL WIDTH OF INDIVIDUAL LETTERS TO BE SUCH THAT LETTERS AND WORDS ARE EQUALLY SPACED AND BALANCED TO FORM A COMPLETE CIRCLE WITH SPACERS BEFORE AND AFTER THE WORD IDENTIFYING THE AGENCY INVOLVED. LETTERS TO BE 2" IN HEIGHT AND RAISED FLUSH W/ TOP OF COVER. TYPE OF LETTERS TO BE SUBMITTED FOR APPROVAL. WEIGHT OF CASTINGS SHALL BE NO MORE THAN 2% MORE OR LESS THAN THE APPROXIMATE WEIGHT SPECIFIED. CASTINGS SHALL CONFORM TO ASTM A-48, CLASS 35 AND AASHTO M306. THE BEARING SURFACES OF THE FRAMES AND COVERS SHALL BE MACHINED AND THE COVERS SHALL SEAT FIRMLY WITHOUT ROCKING. ALL DIMENSIONS SHALL HAVE A 1/16" TOLERANCE.

DETAIL NO.				REVISED	DETAIL NO.
424-2	MARICOPA ASSOCIATION of GOVERNMENTS	STANDARD DETAIL ENGLISH	30" CAST IRON WATERTIGHT MANHOLE FRAME AND COVER	01-01-2012	424-2

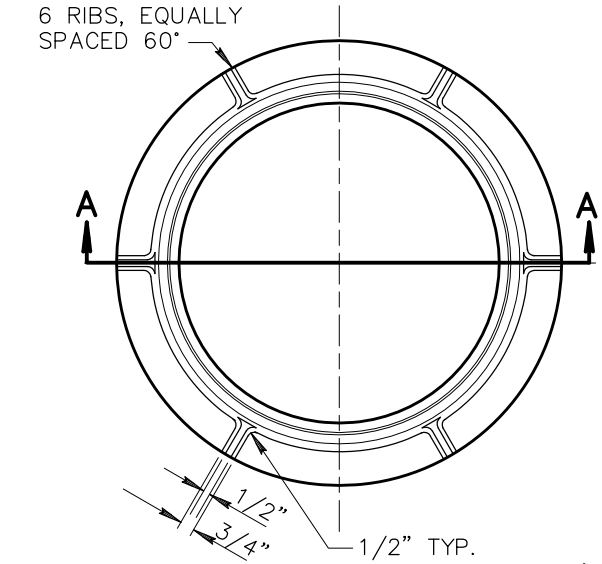

TOP VIEW

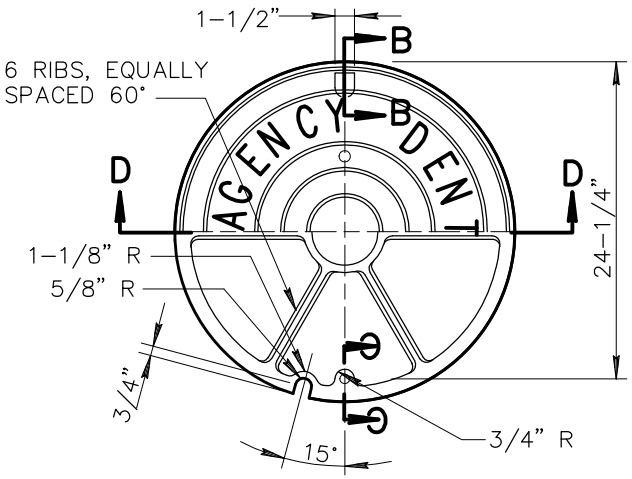

BOTTOM VIEW

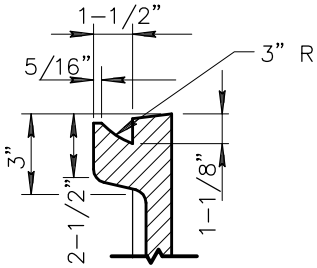

SECTION 'B-B'

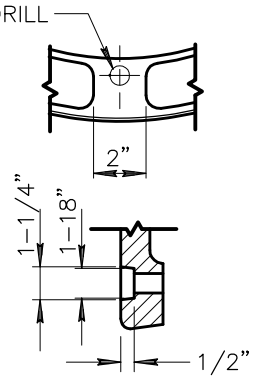

SECTION 'C-C'

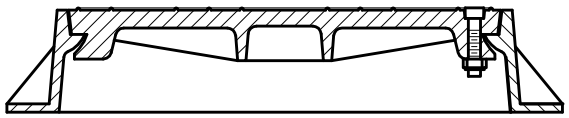

SECTION VIEW OF FRAME AND COVER WITH CAM LOCKING DEVICE

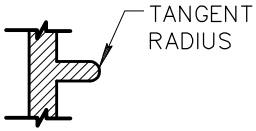

SECTION E-E

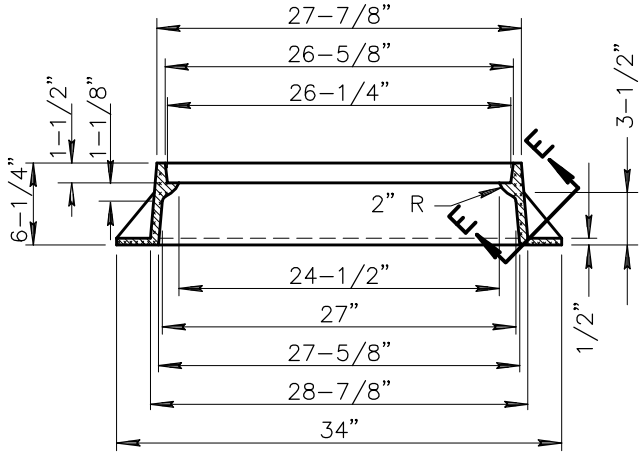

SECTION 'A-A'

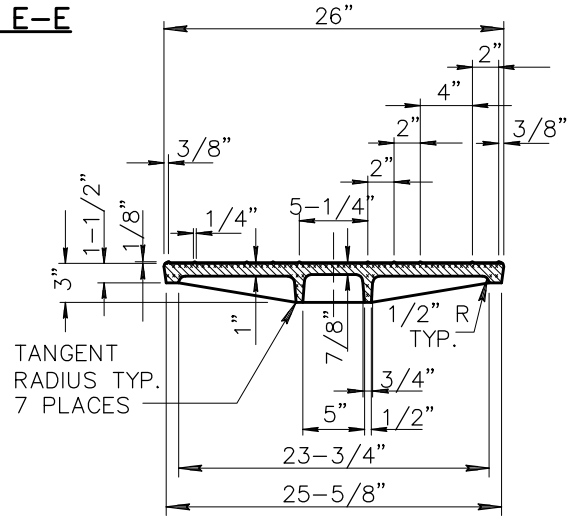

SECTION 'D-D'

NOTES:

1. MATERIAL SHALL CONFORM TO A.S.T.M. STANDARDS
   B 179-65 ALLOY SN122A
   B 179-65 ALLOY CN42A
   B 108-65 ALLOY SC103A
   (ALL 3 ACCEPTABLE)
2. LETTERING ON MANHOLE COVER TO CONTAIN NAME OF AGENCY AND UTILITY FOR WHICH MANHOLE IS NEEDED. (I.E. "PHOENIX SANITARY SEWER"), OR AS DIRECTED. THE TOTAL WIDTH OF INDIVIDUAL LETTERS TO BE SUCH THAT LETTERS AND WORDS ARE EQUALLY SPACED AND BALANCED TO FORM A COMPLETE CIRCLE WITH SPACERS BEFORE AND AFTER THE WORD IDENTIFYING THE AGENCY INVOLVED. LETTERS TO BE 2" RAISED 1/8" ABOVE LEVEL OF COVER. TYPE OF LETTERS TO BE SUBMITTED FOR APPROVAL.
3. WEIGHT OF CASTINGS SHALL BE NO MORE THAN 2% LESS THAN THE APPROXIMATE WEIGHT SPECIFIED.
4. CASTINGS SHALL CONFORM TO SECT. 787.
5. SHALL CONFORM TO SECT. 625.3.1 - (FRAME AND COVER).

DETAIL NO.				REVISED	DETAIL NO.
425	MARICOPA ASSOCIATION of GOVERNMENTS	STANDARD DETAIL ENGLISH	24" ALUMINUM MANHOLE FRAME AND COVER	01-01-1998	425

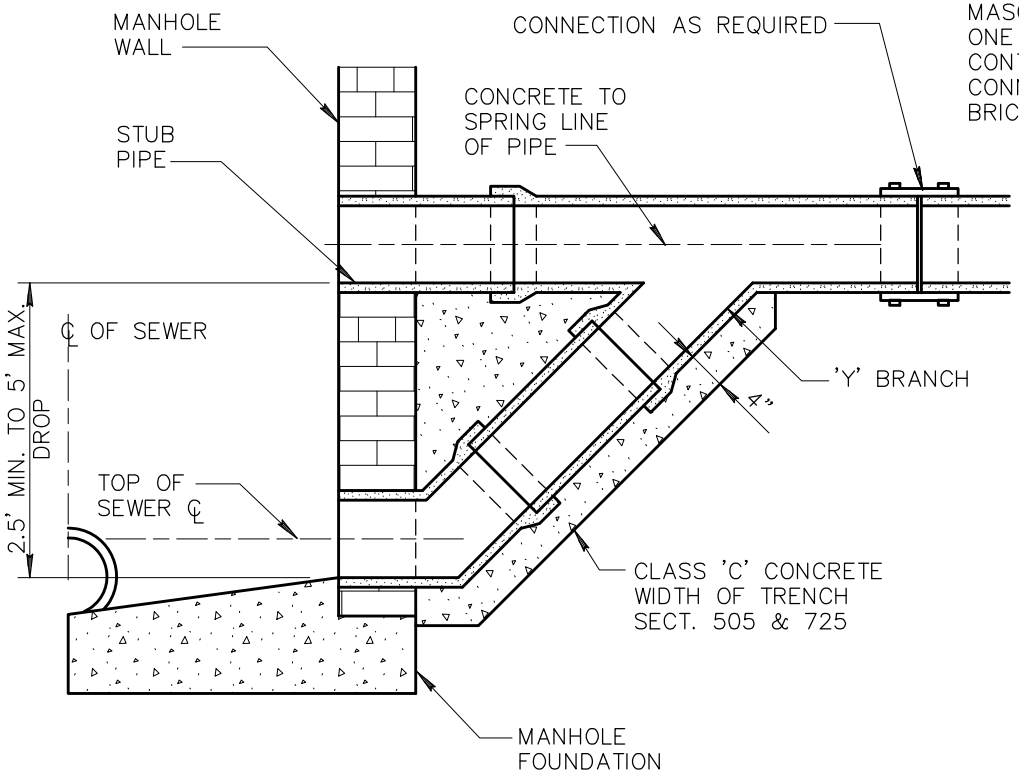

TYPE A

2.5' TO 5' DROP

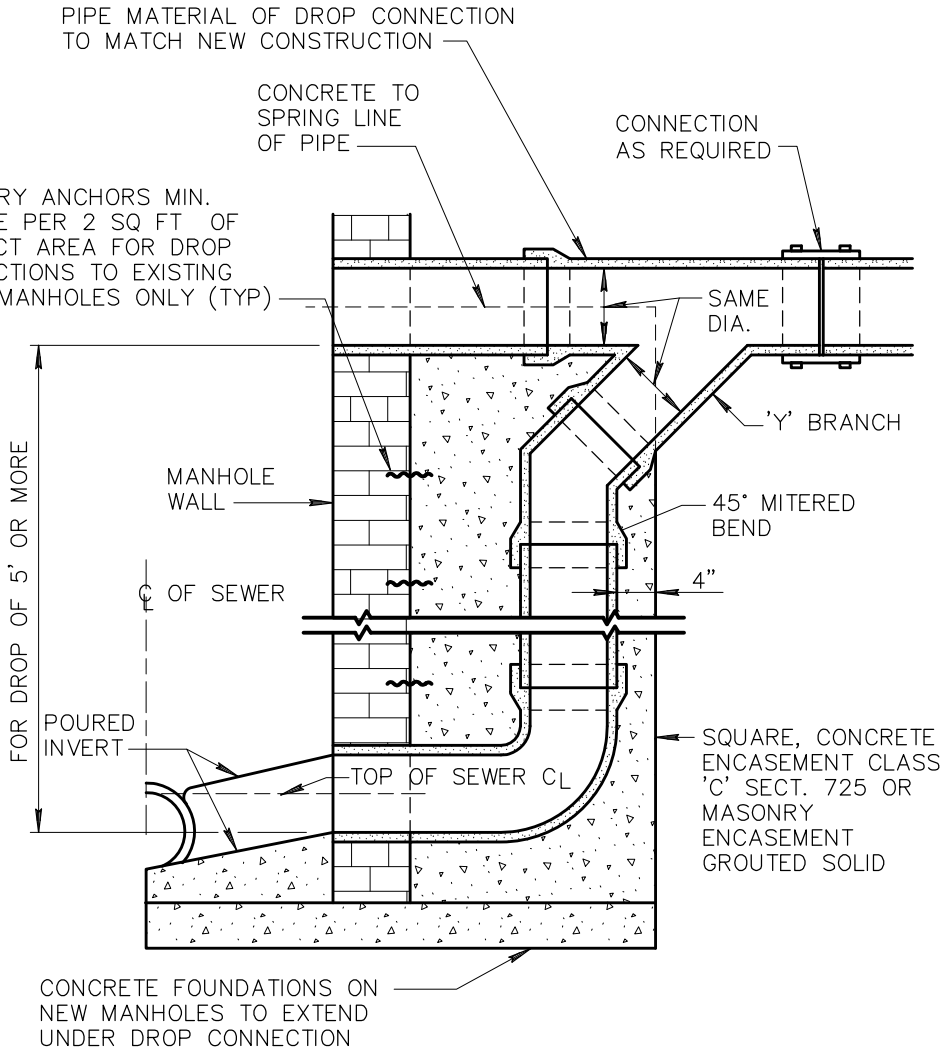

TYPE B

5' OR MORE

DETAIL NO.				REVISED	DETAIL NO.
426	MARICOPA ASSOCIATION of GOVERNMENTS	STANDARD DETAIL ENGLISH	DROP SEWER CONNECTIONS	01-01-2007	426

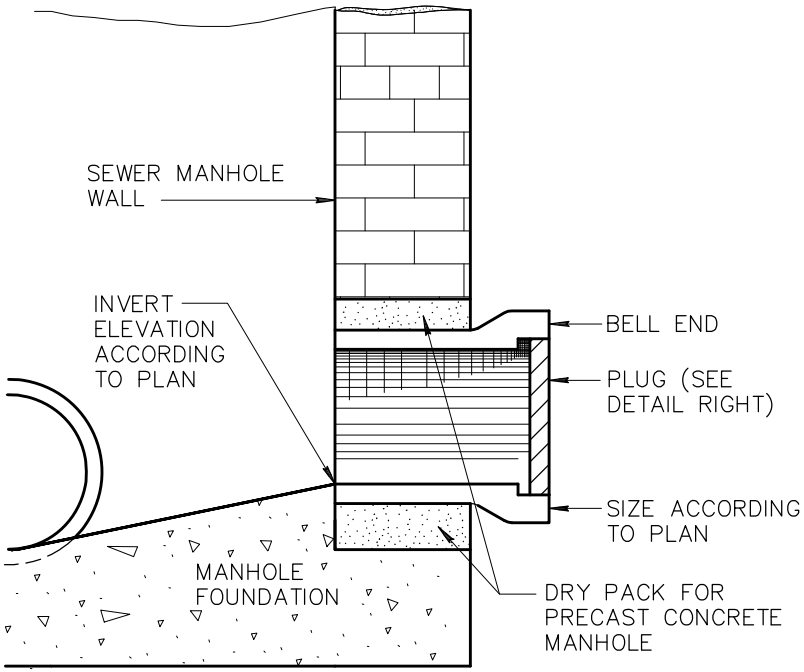

TYPICAL STUB OUT

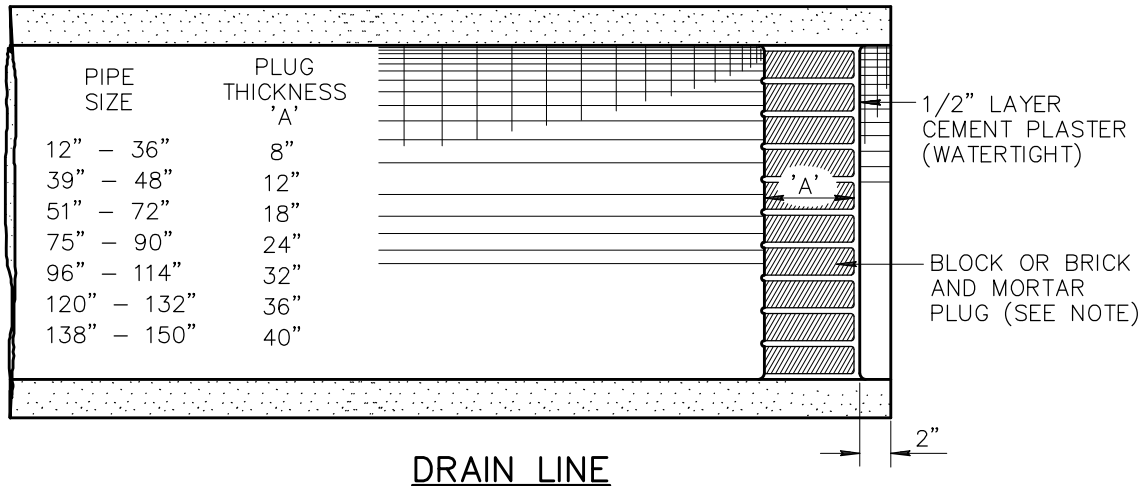

PIPE SIZE	PLUG THICKNESS 'A'
12" – 36"	8"
39" – 48"	12"
51" – 72"	18"
75" – 90"	24"
96" – 114"	32"
120" – 132"	36"
138" – 150"	40"

DRAIN LINE

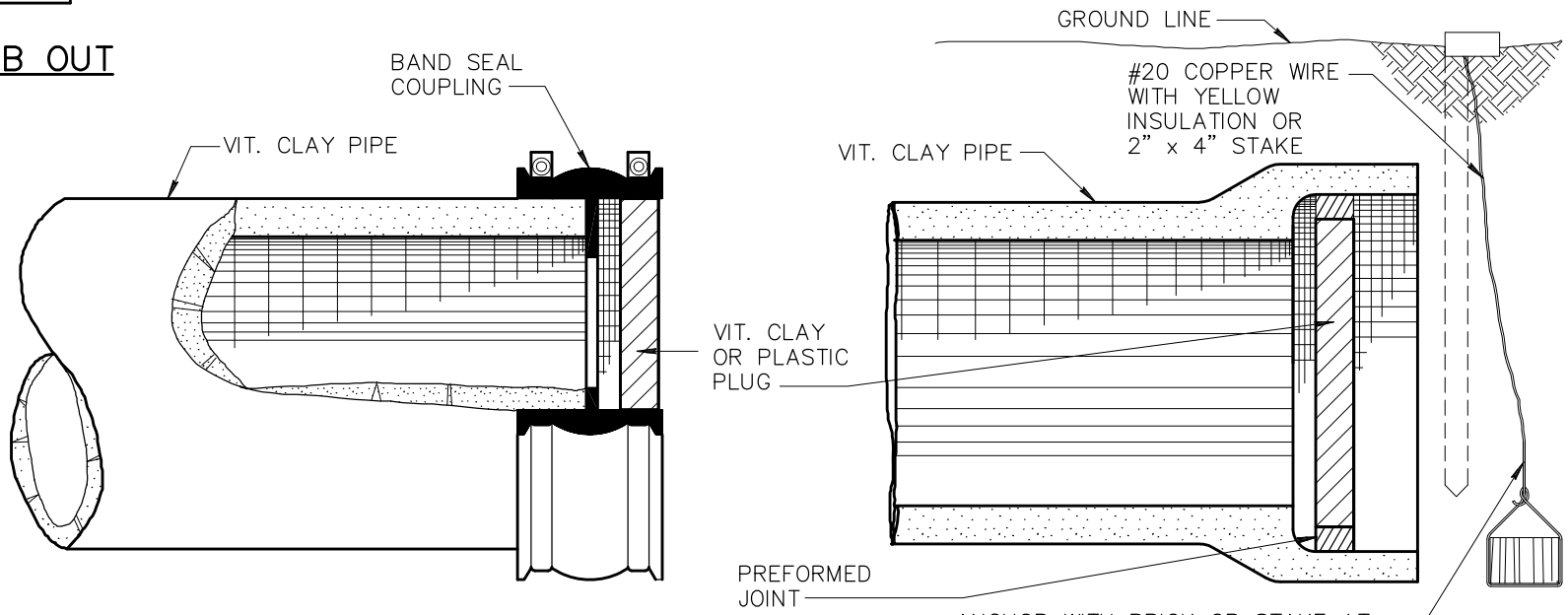

SEWER LINE

NOTES:

1. NOTE: COMPACT SOIL AT END OF PIPE TO 95% OF MAXIMUM DENSITY.
2. IF DEPTH OF COVER IS LESS THAN 5' OR GREATER THAN 10' INCREASE PLUG THICKNESS A MIN. OF 4".

DETAIL NO.				REVISED	DETAIL NO.
427	MARICOPA ASSOCIATION of GOVERNMENTS	STANDARD DETAIL ENGLISH	STUB OUT AND PLUGS	01–01–1998	427

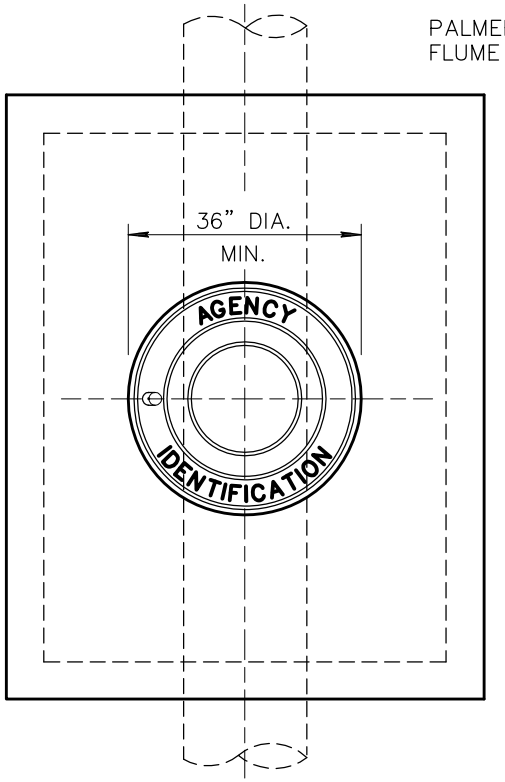

MANHOLE & COVER SLAB

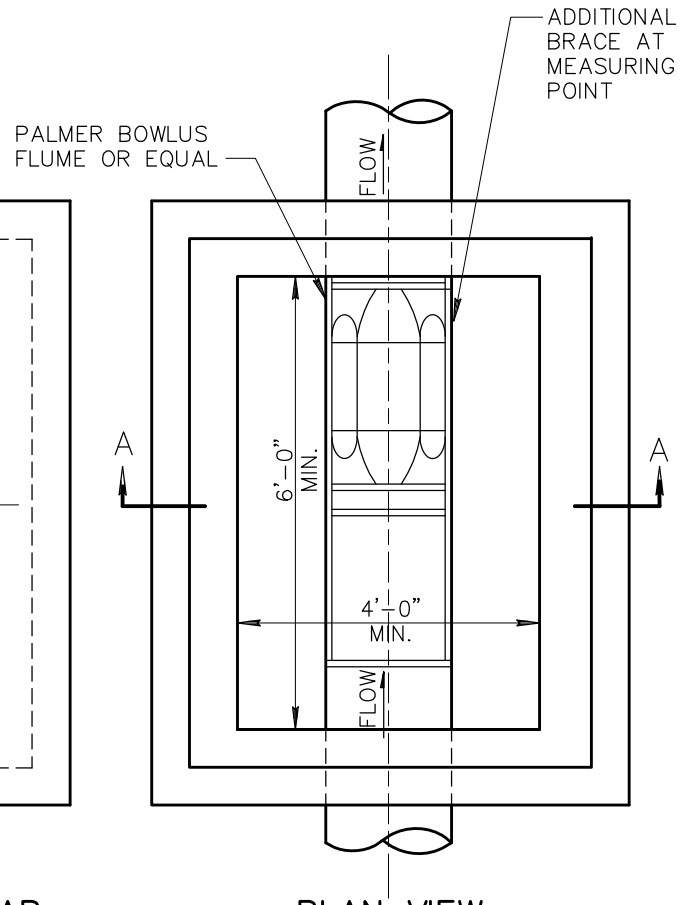

PLAN VIEW

NOTE: WITH COVER REMOVED.

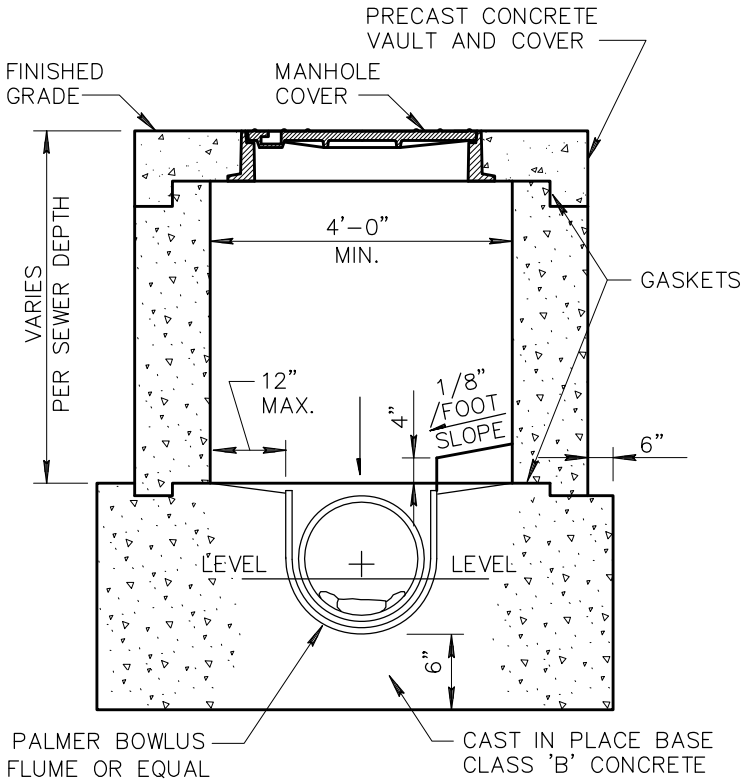

SECTION A–A

NOTE: LADDER NOT SHOWN IN SECTION VIEW.
SECTION SHOWN WITH COVER IN PLACE.

NOTES:

1. THIS CONTROL VAULT WITH MANHOLE AND COVER SHALL BE USED ON 6" AND 8" DIAMETER SEWER WITH FLOWS IN THE RANGE OF 40 TO 340 GPM.
2. VAULT TO BE CONSTRUCTED ON STRAIGHT RUN OF BUILDING SEWER. ACCESSIBLE AND SAFELY LOCATED ON THE OWNERS PROPERTY ADJACENT TO A PUBLIC RIGHT–OF–WAY.
3. THE PALMER BOWLUS FLUME SHALL BE INSTALLED PER THE MANUFACTURERS RECOMMENDATIONS.
4. THE PRE–CAST CONCRETE VAULT SHALL BE RECTANGULAR WITH MINIMUM INSIDE DIMENSIONS OF 4' WIDE AND 6' LONG AND AT A DEPTH OF THE DESIGN OF THE BUILDING SEWER.
5. A SHOP DRAWING SHALL BE SUBMITTED TO THE CONTRACTING AGENCY FOR APPROVAL BEFORE INSTALLATION OF THE VAULT AND THE PALMER BOWLUS FLUME WILL BE ALLOWED.

DETAIL NO.				REVISED	DETAIL NO.
429	MARICOPA ASSOCIATION of GOVERNMENTS	STANDARD DETAIL ENGLISH	INDUSTRIAL WASTE CONTROL VAULT WITH MANHOLE	01–01–2015	429

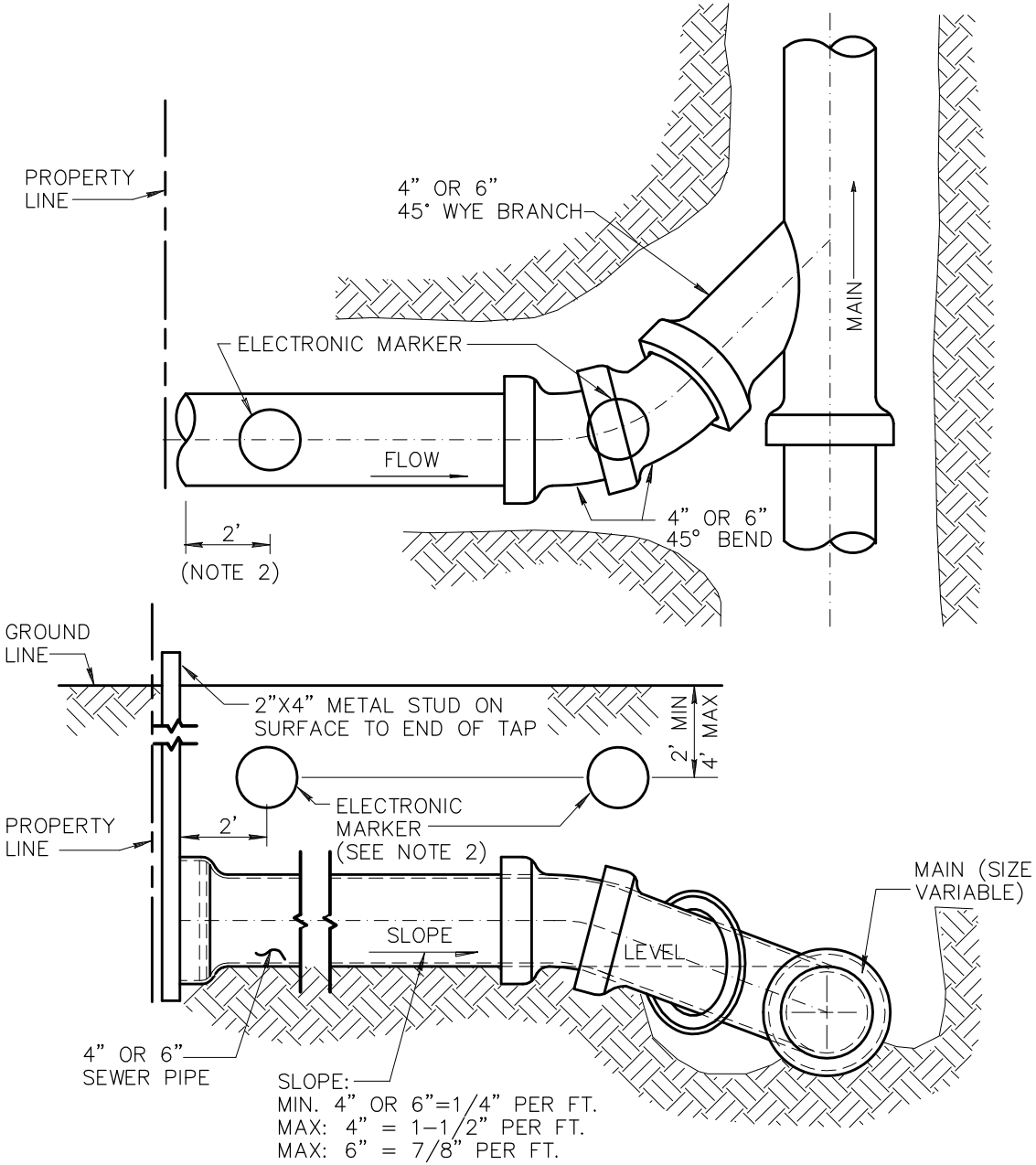

ELECTRONIC MARKER PLACEMENT

NOTES:

1. ELECTRONIC MARKER SHALL BE A 3M MODEL 1424-XR/iD [4" DIAMETER SELF LEVELING MARKER BALL GREEN IN COLOR] OR APPROVED EQUAL OR AS REQUIRED BY THE LOCAL AGENCY.
2. MARKER SHALL BE INSTALLED IN ACCORDANCE WITH THE MANUFACTURER'S DIRECTIONS, 2' BACK FROM THE END OF THE SEWER SERVICE STUB AND CINCH TIED TO PIPE OR ABOVE PIPE AS REQUIRED BY LOCAL AGENCY. AN ADDITIONAL MARKER SHALL BE INSTALLED AT EACH SERVICE STUB BEND.
3. ELECTRONIC MARKER SHALL BE RESTORED BY CONTRACTOR IF DISTURBED WHEN PRIVATE SERVICE LINE CONNECTION IS INSTALLED.
4. MARKER SHALL BE USED IN ADDITION TO A 2"x4" METAL STUD.
5. CONSTRUCTION DETAIL APPLIES WHERE CONTRACTOR BUILDS HOUSE CONNECTION. TAP EXTENDS TO PROPERTY LINE IN ALLEYS OR STREETS OR TO EASEMENT LINE.
6. SIZE OF TAP SHALL BE DESIGNATED ON PLANS.
7. CONSTRUCT TAP AT MINIMUM SLOPE IF COVER WILL BE LESS THAN 5' AT PROPERTY LINE.
8. ALL FITTINGS SHALL BE INSTALLED IN ACCORDANCE WITH ASTM D-2321. THE CONTRACTOR MAY VARY FROM THE DRAWING TO USE THE APPROPRIATE WYES, TEE-WYES AND BENDS TO ENSURE NO MISALIGNMENT OF THE PIPE AND FITTINGS. BLOCK OR BRACE FITTINGS JOINTS TO ENSURE ZERO DEGREES ANGULAR JOINT DEFLECTION.
9. END OF TAP TO BE SEALED AND MARKED AS NOTED.

DETAIL NO.				REVISED	DETAIL NO.
440-1	MARICOPA ASSOCIATION of GOVERNMENTS	STANDARD DETAIL ENGLISH	**TYPE 'A' - SEWER BUILDING CONNECTION ELECTRONIC BALL MARKERS (STANDARD)**	01-01-2007	440-1

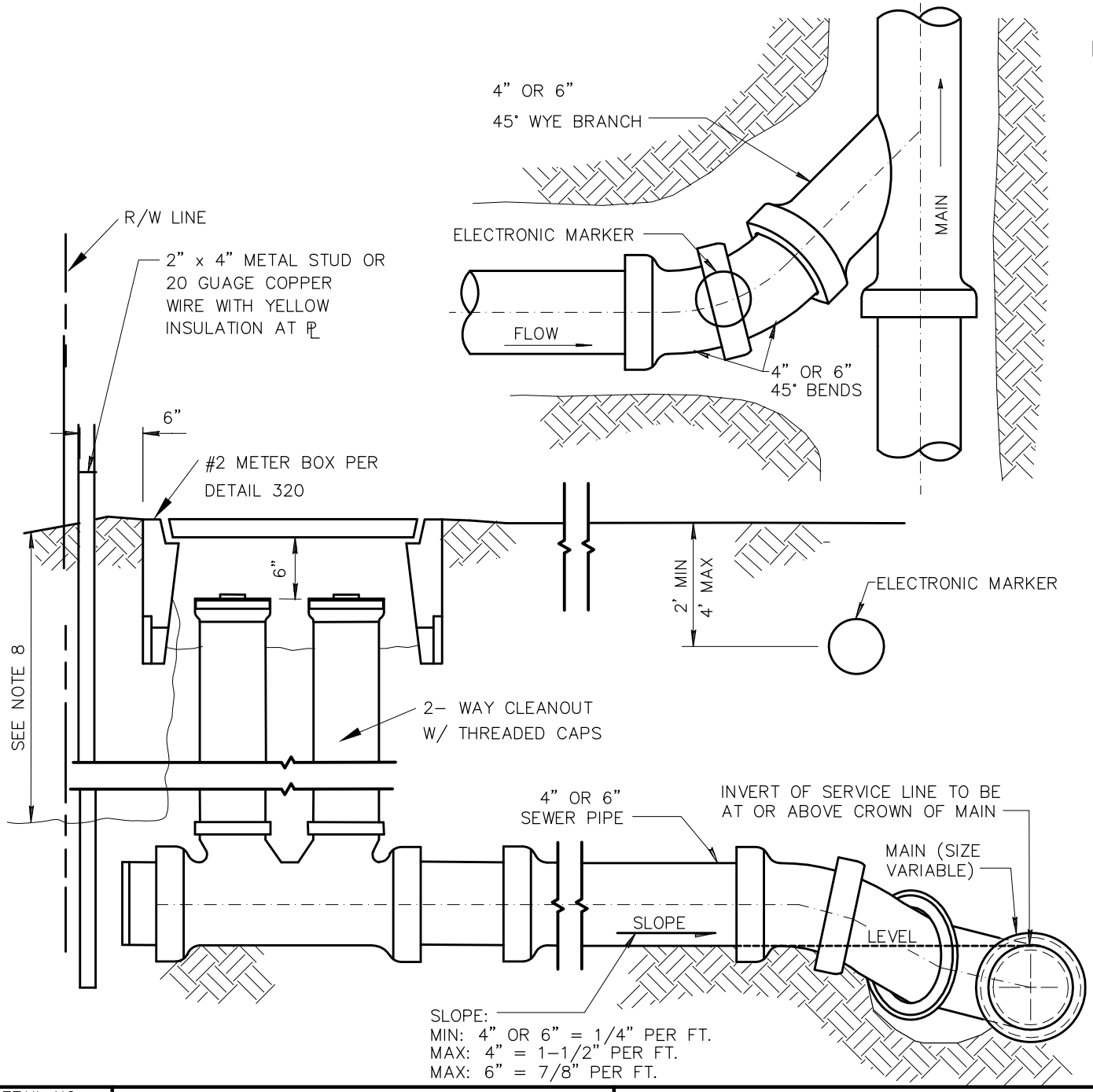

NOTES:

1. CONSTRUCTION DETAIL APPLIES WHERE CONTRACTOR BUILDS HOUSE CONNECTION. TAP EXTENDS TO PROPERTY LINE IN ALLEYS OR STREETS OR TO EASEMENT LINE.
2. SIZE OF TAP SHALL BE DESIGNATED ON PLANS.
3. CONSTRUCT TAP AT MINIMUM SLOPE IF COVER WILL BE LESS THAN 5' AT PROPERTY LINE.
4. IF DEPTH REQUIRES, MINIMUM SLOPE CAN BE REDUCED TO 1/8" PER FOOT PROVIDED STUB IS STAKED TO GRADE.
5. ALL FITTINGS SHALL BE INSTALLED IN ACCORDANCE WITH ASTM D-2321. THE CONTRACTOR MAY VARY FROM THE DRAWING TO USE THE APPROPRIATE WYES, TEE-WYES AND BENDS TO ENSURE NO MISALIGNMENT OF THE PIPE AND FITTINGS. BLOCK OR BRACE FITTING JOINTS TO ENSURE ZERO DEGREES ANGULAR JOINT DEFLECTION.
6. END OF TAP TO BE SEALED AND MARKED AS NOTED.
7. ELECTRONIC MARKER SHALL BE A 3M MODEL 1424-XR/iD [4" DIAMETER SELF LEVELING MARKER BALL GREEN IN COLOR] OR APPROVED EQUAL OR AS REQUIRED BY THE LOCAL AGENCY.
8. # 14 BARE COPPER LOCATOR WIRE ACCESSIBLE AT R/W AND AT PROPERTY OWNER CLEANOUT BOX NO GREATER THAN 4' DEEP.
9. STAMP OR WELD THE LETTER "S" ON LID OF METER BOX.

DETAIL NO.				REVISED	DETAIL NO.
440-2	MARICOPA ASSOCIATION of GOVERNMENTS	STANDARD DETAIL ENGLISH	**TYPE 'B' - SEWER BUILDING CONNECTION** **TWO-WAY CLEANOUT AND METER BOX AT R/W** (WHEN SPECIFIED BY LOCAL AGENCY)	01-01-2007	440-2

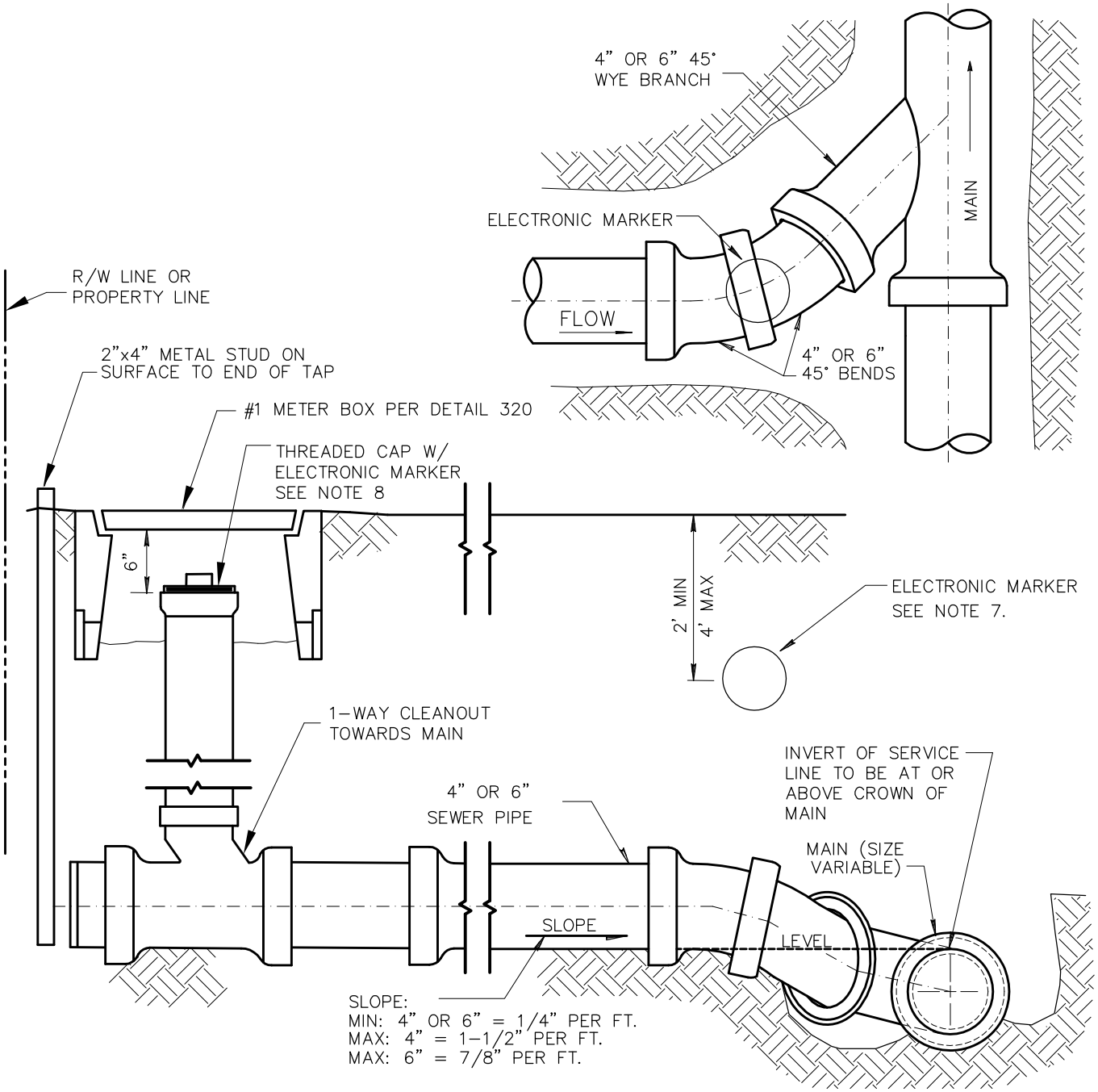

NOTES:

1. CONSTRUCTION DETAIL APPLIES WHERE CONTRACTOR BUILDS HOUSE CONNECTION. TAP EXTENDS TO PROPERTY LINE IN ALLEYS OR STREETS OR TO EASEMENT LINE.
2. SIZE OF TAP SHALL BE DESIGNATED ON PLANS.
3. CONSTRUCT TAP AT MIN. SLOPE IF COVER WILL BE LESS THAN 5' AT PROPERTY LINE.
4. IF DEPTH REQUIRES, MINIMUM SLOPE CAN BE REDUCED TO 1/8" PER FOOT PROVIDED STUB IS STAKED TO GRADE.
5. ALL FITTINGS SHALL BE INSTALLED IN ACCORDANCE WITH ASTM D-2321. THE CONTRACTOR MAY VARY FROM THE DRAWING TO USE THE APPROPRIATE WYES, TEE-WYES AND BENDS TO ENSURE NO MISALIGNMENT OF THE PIPE AND FITTINGS. BLOCK OR BRACE FITTING JOINTS TO ENSURE ZERO DEGREES ANGULAR JOINT DEFLECTION.
6. END OF TAP TO BE SEALED AND MARKED.
7. ELECTRONIC MARKER SHALL BE A 3M MODEL 1424-XR/iD [4" DIAMETER SELF LEVELING MARKER BALL GREEN IN COLOR] OR APPROVED EQUAL OR AS REQUIRED BY THE LOCAL AGENCY.
8. INSTALL RAISED 4" THREADED PLUG IN CLEANOUT INCORPORATING 3M MODEL 1414 ELECTRONIC DISC MARKER. GREEN IN COLOR. LOCATOR PLUG TO BE GPK PRODUCTS MODEL #228-0004 DM OR APPROVED EQUAL.
9. STAMP OR WELD THE LETTER "S" ON LID OF METER BOX.

DETAIL NO.				REVISED	DETAIL NO.
440-3	MARICOPA ASSOCIATION of GOVERNMENTS	STANDARD DETAIL ENGLISH	**TYPE 'C' - SEWER BUILDING CONNECTION** **ONE-WAY CLEANOUT AND METER BOX** (WHEN SPECIFIED BY LOCAL AGENCY)	01-01-2007	440-3

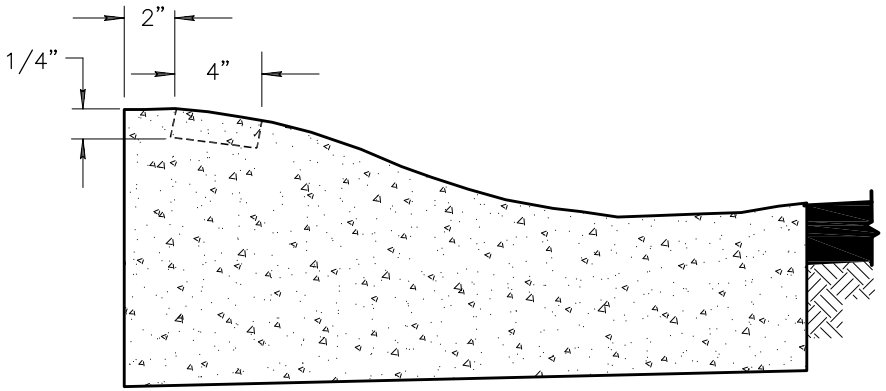

SECTION A–A

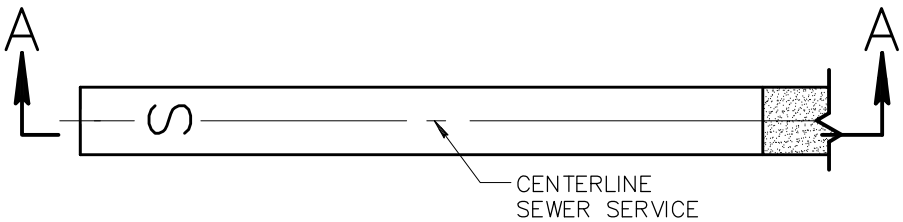

CURB STAMP ROLLED CURB

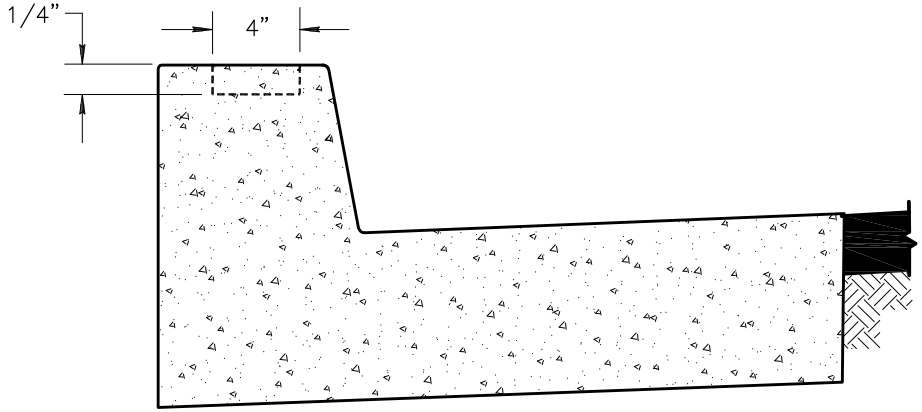

SECTION A–A

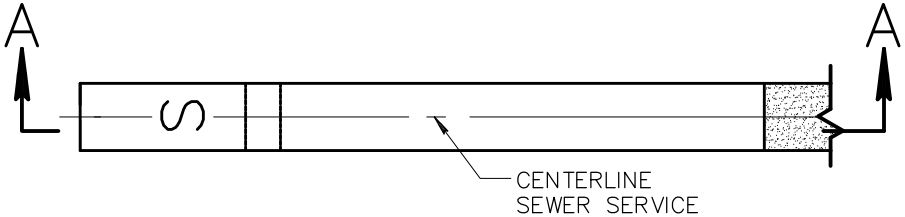

CURB STAMP VERTICAL CURB

NOTES:

1. STAMP TOP OF CURB WITH 4" TALL BY 1/4" DEEP "S" TO DESIGNATE SEWER SERVICE LINE CROSSING.

DETAIL NO.				REVISED	DETAIL NO.
440–4	MARICOPA ASSOCIATION of GOVERNMENTS	STANDARD DETAIL ENGLISH	**SEWER SERVICE CURB CROSSING STAMP DETAIL**	01–01–2006	440–4

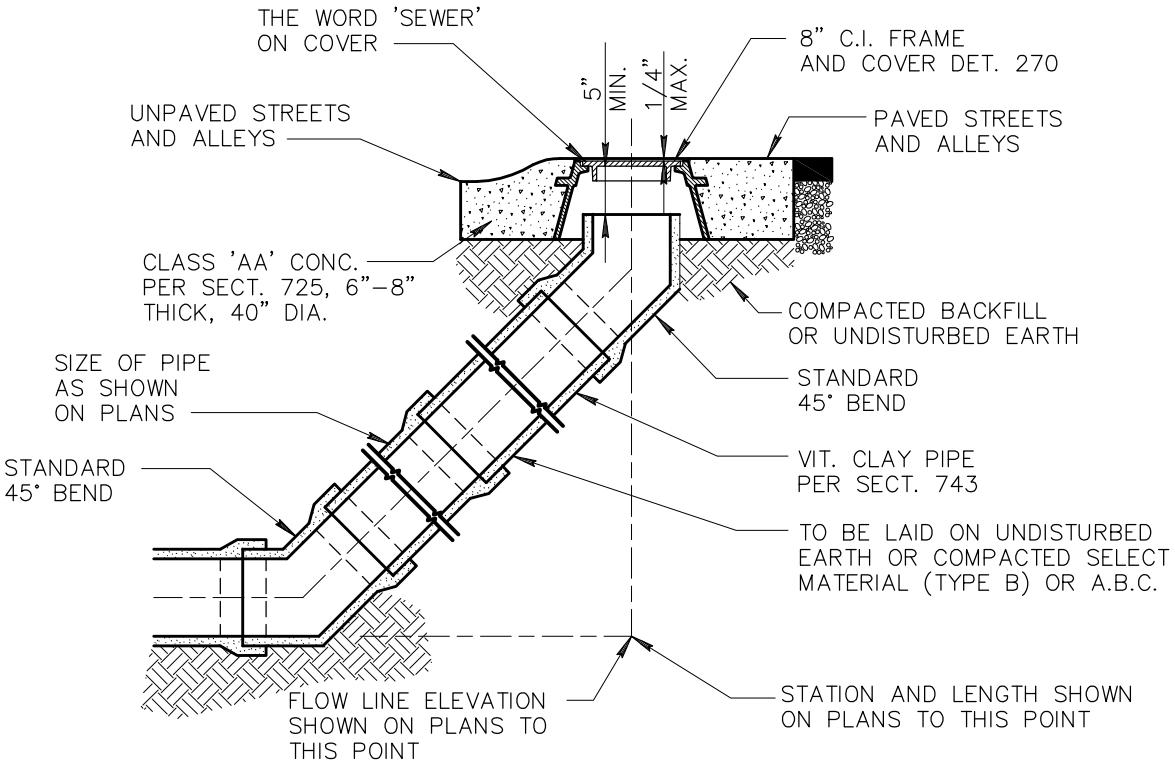

CLEANOUT INSTALLATION

NOTE:

END OF SEWER TAP TO BE SEALED AND MARKED IN ACCORDANCE WITH DET. 440

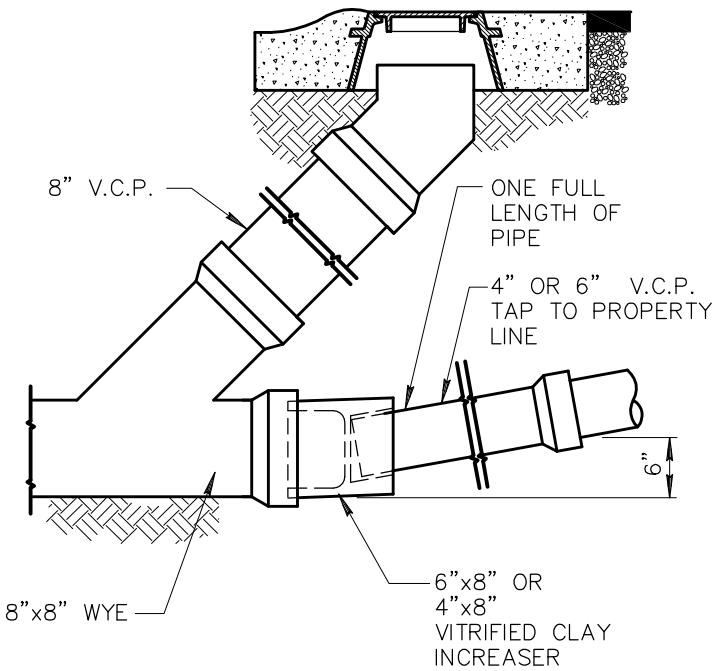

SEWER TAP AT CLEANOUT

DETAIL NO.				REVISED	DETAIL NO.
441	MARICOPA ASSOCIATION of GOVERNMENTS	STANDARD DETAIL ENGLISH	SEWER CLEANOUT	01–01–2001	441

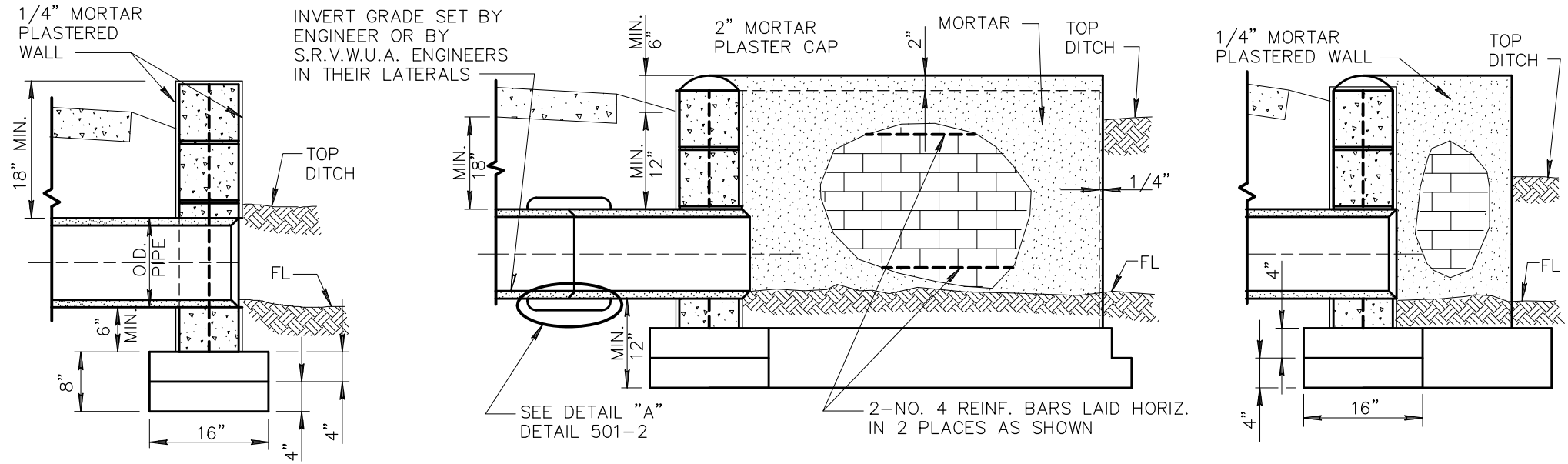

SECTION B-B

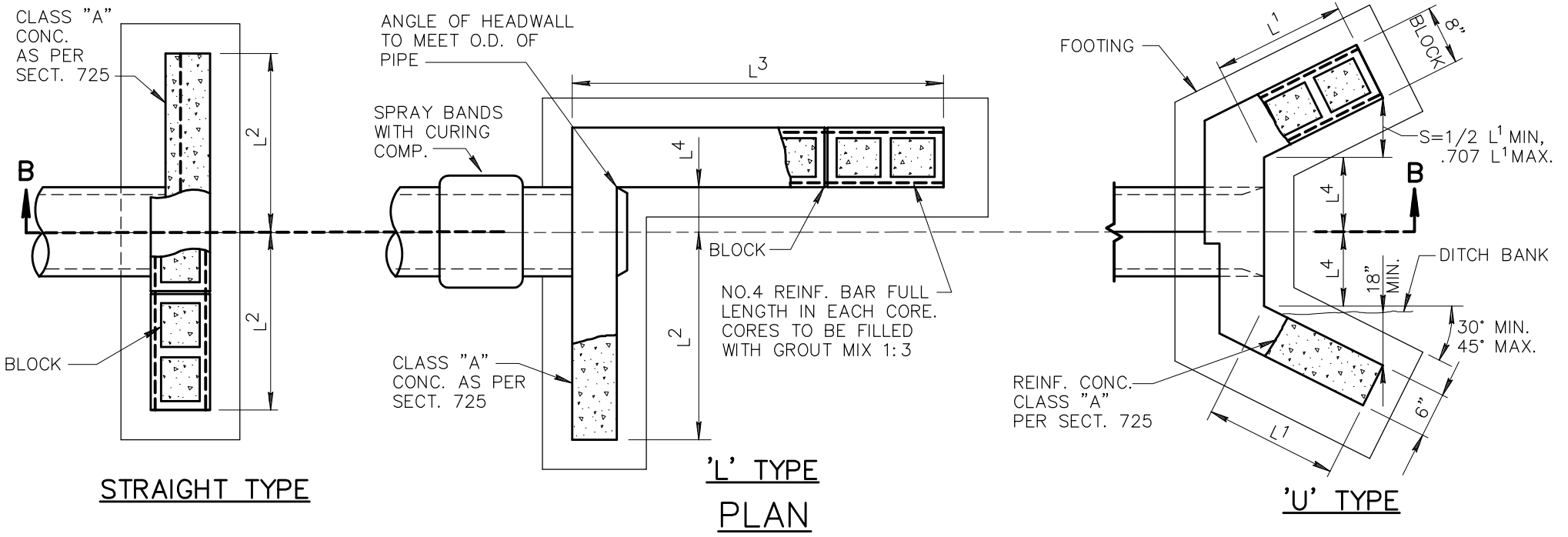

STRAIGHT TYPE

'L' TYPE

PLAN

'U' TYPE

DETAIL NO.		STANDARD DETAIL		REVISED	DETAIL NO.
501-1	MARICOPA ASSOCIATION of GOVERNMENTS	ENGLISH	HEADWALL	01-01-2012	501-1

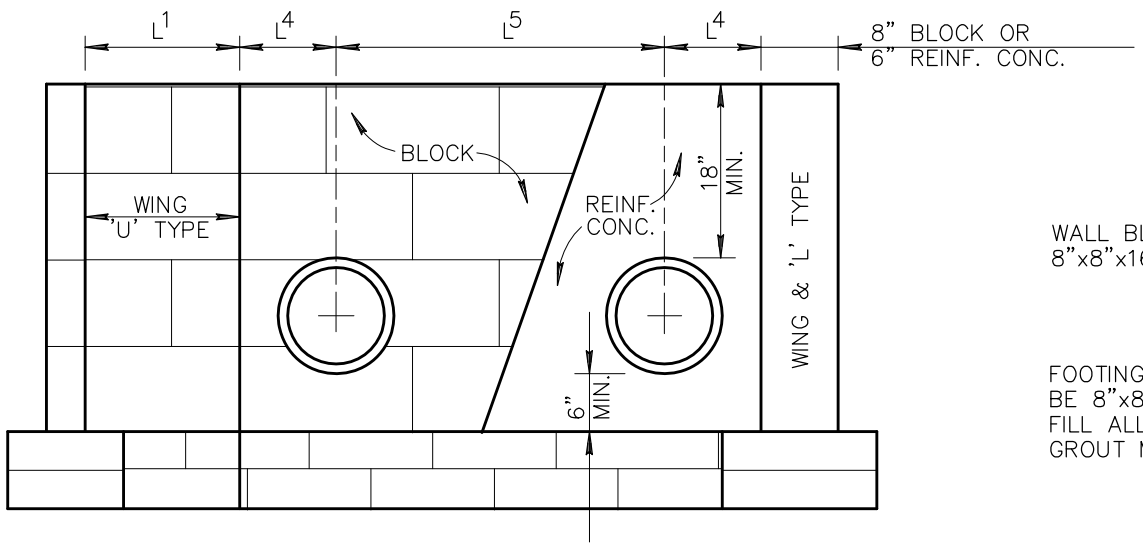

DOUBLE PIPE HEADWALL

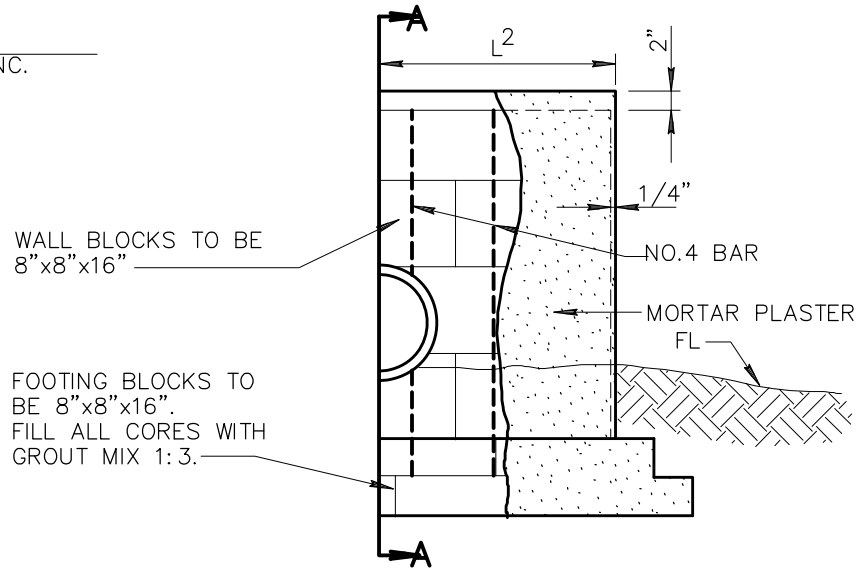

ELEVATION

CONCRETE MASONRY UNITS (BLOCK) HEADWALLS JOINED WITH CEMENT MORTAR PLASTERED BOTH SIDES OF WALL FULL HEIGHT AND SHALL BE CURED PER SECT. 726.

NOTES:

1. ALL CONCRETE SHALL BE CLASS 'A' PER SECT. 505 & 725.
2. CONCRETE MASONRY UNITS (BLOCK) PER SECT. 510, 775 & 776.
3. CONCRETE REINF. SHALL BE NO.4 BAR 12" O.C. BOTH WAYS.

HEADWALL DIMENSIONS

*NOMINAL PIPE SIZE	L^1	L^2	L^3	L^4	L^5
12"	1'-4"	2'-0"	3'-8"	0'-10"	2'-10"
15"	2'-0"	2'-8"	4'-0"	1'-0"	3'-0"
18"	2'-0"	3'-8"	4'-8"	1'-2"	3'-4"
21"	2'-8"	4'-0"	5'-4"	1'-3"	3'-8"
24"	2'-8"	4'-0"	5'-4"	1'-6"	3'-11"
30"	2'-8"	5'-4"	6'-8"	1'-10"	4'-7"
36"	3'-4"	6'-8"	8'-0"	1'-10"	5'-2"
42"	4'-0"	8'-0"	9-4"	2'-2"	5'-9"

* NOMINAL PIPE SIZE GIVEN FOR REINFORCED CONC. PIPE.

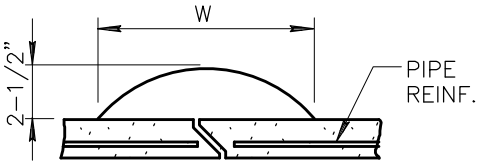

PIPE SIZE	W
12" – 21" INCL.	11"
24" – 42" INCL.	13"

DETAIL "A"

DETAIL NO.				REVISED	DETAIL NO.
501-2	MARICOPA ASSOCIATION of GOVERNMENTS	STANDARD DETAIL ENGLISH	HEADWALL	01-01-2012	501-2

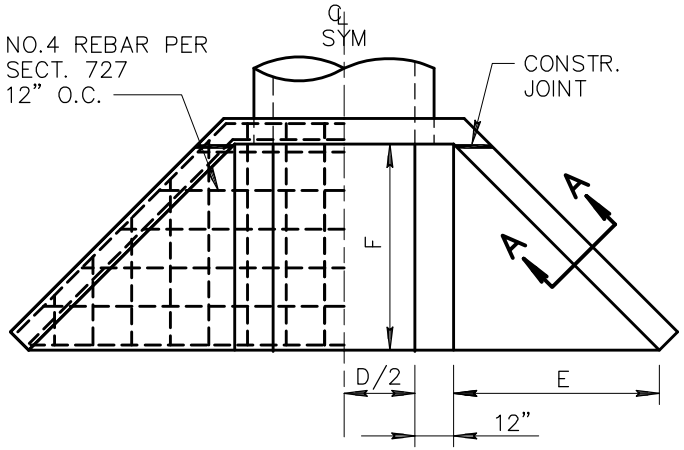

INLET HEADWALL

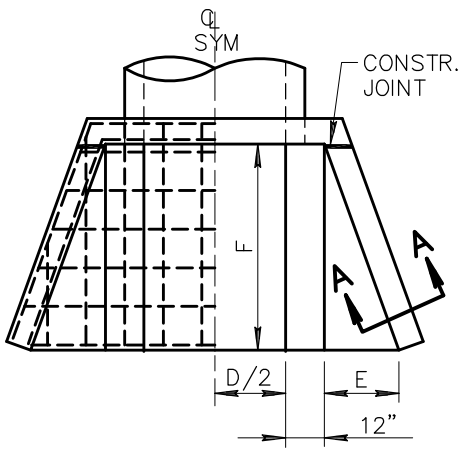

OUTLET HEADWALL

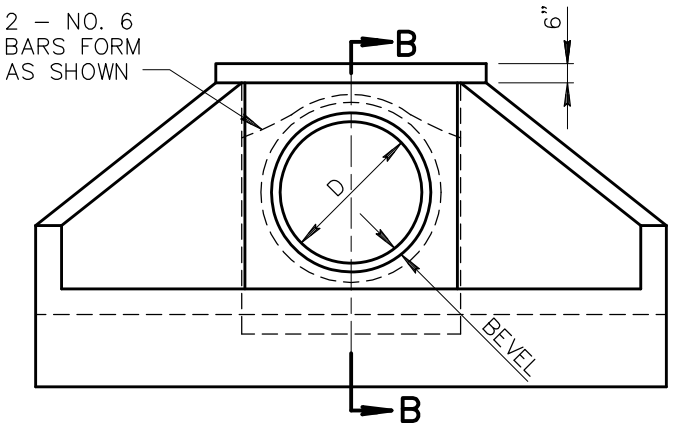

INLET HEADWALL FACE ELEVATION
OUTLET SIMILAR

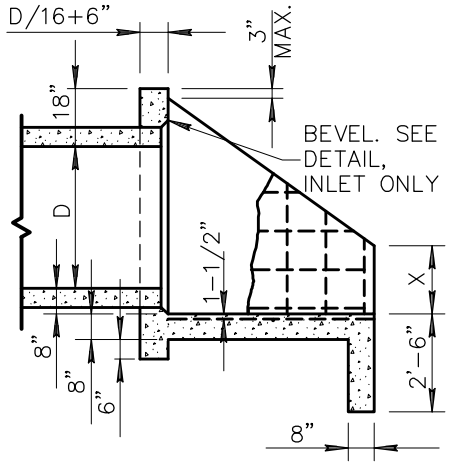

SECTION B–B

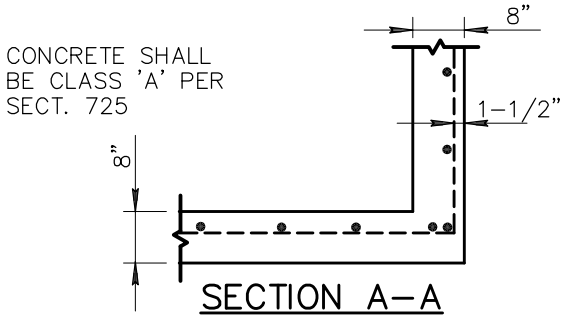

SECTION A–A

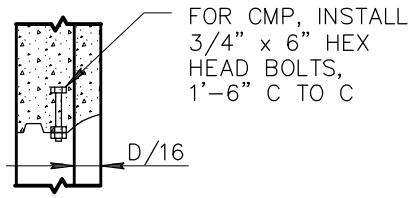

CMP BEVEL DETAIL

1:1 1/2 EMBANKMENT SLOPE				
D	TYPE *	DIMENSIONS		
		F	E	X
42"	1 (IN)	5'–2"	5'–2"	1'–9"
	2 (OUT)	5'–2"	1'–11"	1'–9"
48"	3 (IN)	5'–8"	5'–8"	1'–11"
	4 (OUT)	5'–8"	2'–1"	1'–11"
54"	5 (IN)	6'–2"	6'–2"	2'–1"
	6 (OUT)	6'–2"	2'–3"	2'–1"
60"	7 (IN)	6'–8"	6'–8"	2'–3"
	8 (OUT)	6'–8"	2'–5"	2'–3"
66"	9 (IN)	7'–2"	7'–2"	2'–5"
	10 (OUT)	7'–2"	2'–7"	2'–5"
72"	11 (IN)	7'–8"	7'–8"	2'–7"
	12 (OUT)	7'–8"	2'–9"	2'–7"
78"	13 (IN)	8'–2"	8'–2"	2'–9"
	14 (OUT)	8'–2"	3'–0"	2'–9"
84"	15 (IN)	8'–8"	8'–8"	2'–11"
	16 (OUT)	8'–8"	3'–2"	2'–11"

1:4 EMBANKMENT SLOPE				
D	TYPE *	DIMENSIONS		
		F	E	X
42"	17 (IN)	8'–8"	8'–8"	3'–0"
	18 (OUT)	8'–8"	3'–2"	3'–0"
48"	19 (IN)	8'–8"	8'–8"	3'–6"
	20 (OUT)	8'–8"	3'–2"	3'–6"
54"	21 (IN)	8'–8"	8'–8"	4'–0"
	22 (OUT)	8'–8"	3'–2"	4'–0"
60"	23 (IN)	9'–4"	9'–4"	4'–4"
	24 (OUT)	9'–4"	3'–5"	4'–4"
66"	25 (IN)	9'–8"	9'–8"	4'–9"
	26 (OUT)	9'–8"	3'–6"	4'–9"
72"	27 (IN)	9'–8"	9'–8"	5'–3"
	28 (OUT)	9'–8"	3'–6"	5'–3"
78"	29 (IN)	10'–0"	10'–0"	5'–8"
	30 (OUT)	10'–0"	3'–8"	5'–8"
84"	31 (IN)	10'–8"	10'–8"	6'–0"
	32 (OUT)	10'–8"	3'–11"	6'–0"

* (IN) REFERS TO INLET
(OUT) REFERS TO OUTLET

DETAIL NO.				REVISED	DETAIL NO.
501–3	MARICOPA ASSOCIATION of GOVERNMENTS	STANDARD DETAIL ENGLISH	HEADWALL 42" TO 84" PIPE	01–01–1998	501–3

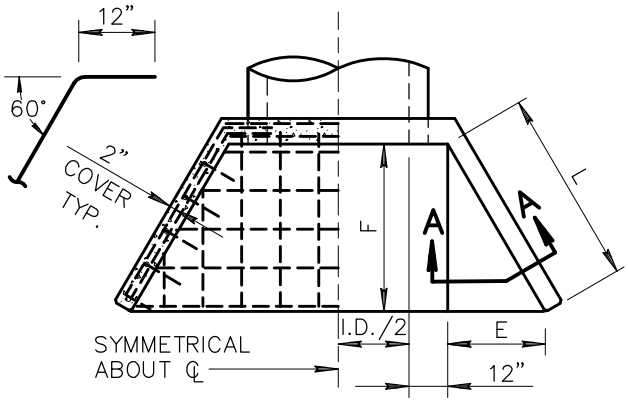

PLAN

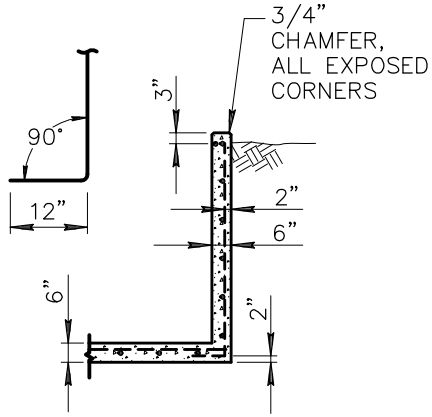

SECTION A–A

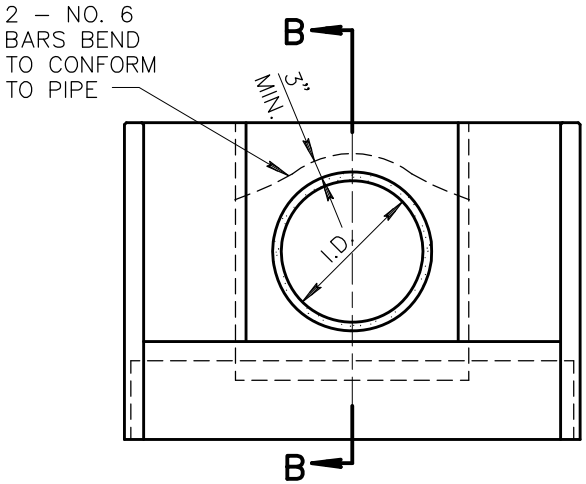

ELEVATION

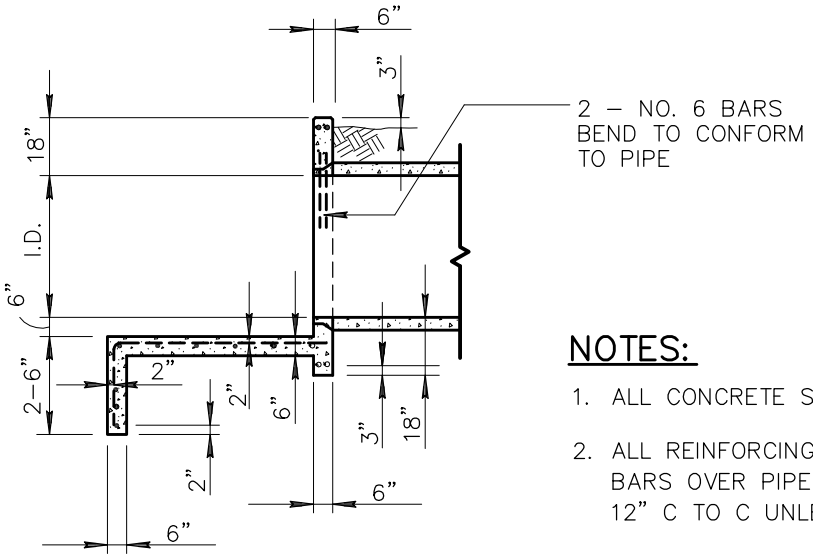

SECTION B–B

PIPE I.D.	DIMENSIONS		
	L	E	F (APPROX)
18"	2'–0"	1'–0"	1'–9"
24"	2'–0"	1'–0"	1'–9"
30"	3'–0"	1'–6"	2'–7"
36"	4'–0"	2'–0"	3'–6"
42"	5'–0"	2'–6"	4'–4"
48"	6'–0"	3'–0"	5'–2"
54"	7'–0"	3'–6"	6'–1"
60"	8'–0"	4'–0"	6'–11"

NOTES:

1. ALL CONCRETE SHALL BE CLASS 'A' PER SECT. 725.
2. ALL REINFORCING BARS SHALL BE NO. 4 EXCEPT NO. 6 BARS OVER PIPE. BAR SPACING APPROXIMATELY 12" C TO C UNLESS OTHERWISE NOTED.
3. 30° WING WALL FLARE SHOWN; 45° NORMALLY DESIRABLE.

DETAIL NO.				REVISED	DETAIL NO.
501–4	MARICOPA ASSOCIATION of GOVERNMENTS	STANDARD DETAIL ENGLISH	HEADWALL IRRIGATION 18" TO 60" PIPE	01–01–1998	501–4

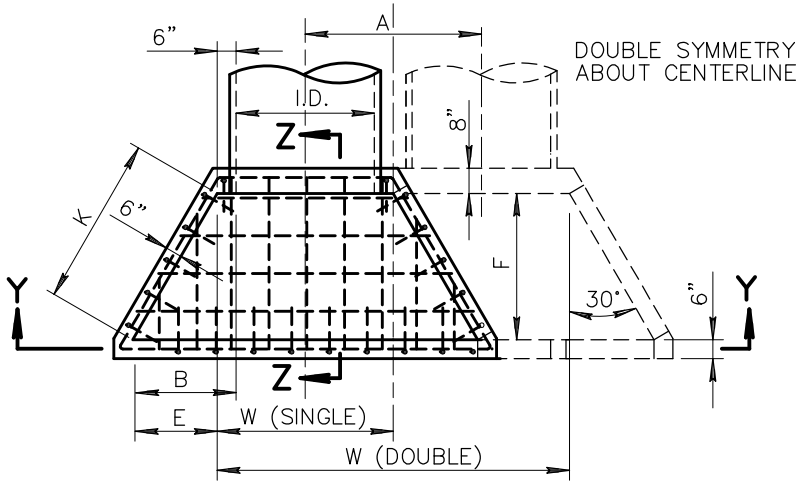

PLAN

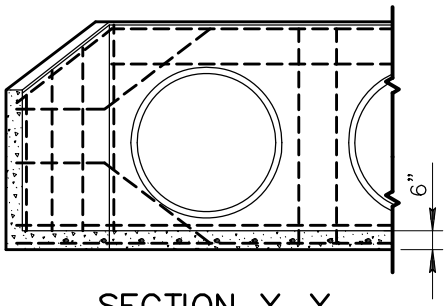

SECTION Y–Y

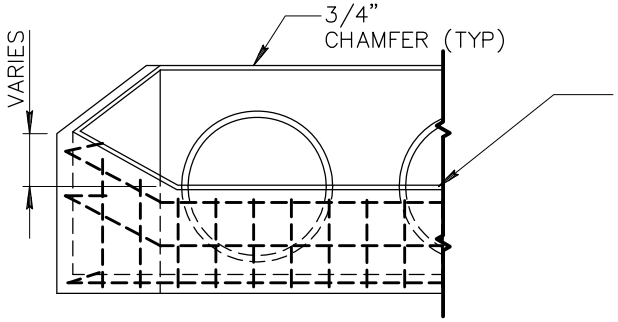

ELEVATION

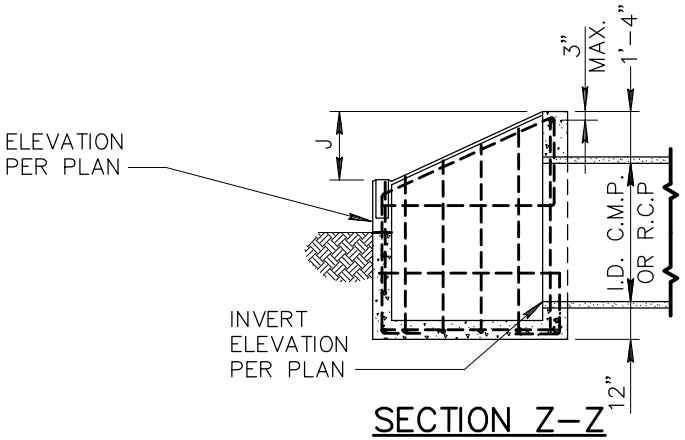

SECTION Z–Z

PIPE	DIMENSIONS							
I.D.	W		A	B	E	F	J	K
	SINGLE	DOUBLE						
18"	2'–6"	5'–2"	2'–8"	1'–3"	0'–9"	1'–3·5/8"	9"	1'–6"
24"	3'–0"	6'–6"	3'–6"	1'–7·1/2"	1'–1·1/2"	1'–11· 3/8"	11"	2'–3"
30"	3'–6"	7'–10"	4'–4"	2'–0"	1'–6"	2'–7·1/4"	1'–1"	3'–0"
36"	4'–0"	9'–2"	5'–2"	2'–4·1/2"	1'–10·1/2"	3'–3"	1'–4"	3'–9"
42"	4'–6"	10–6"	6'–0"	2'–9"	2'–3"	3'–10·3/4"	1'–6"	4'–6"

NOTES:

1. HIGH POINT OF HEADWALL SHALL NOT PROJECT MORE THAN 3" ABOVE SLOPE.
2. ALL CONCRETE SHALL BE CLASS 'A' PER SECT. 725.
3. ALL REINFORCING BARS SHALL BE NO. 4, 12" C TO C AND 3" CLEAR TO INSIDE OF FLOOR AND WALLS.

DETAIL NO.				REVISED	DETAIL NO.
501–5	MARICOPA ASSOCIATION of GOVERNMENTS	STANDARD DETAIL ENGLISH	HEADWALL DROP INLET	01–01–2014	501–5

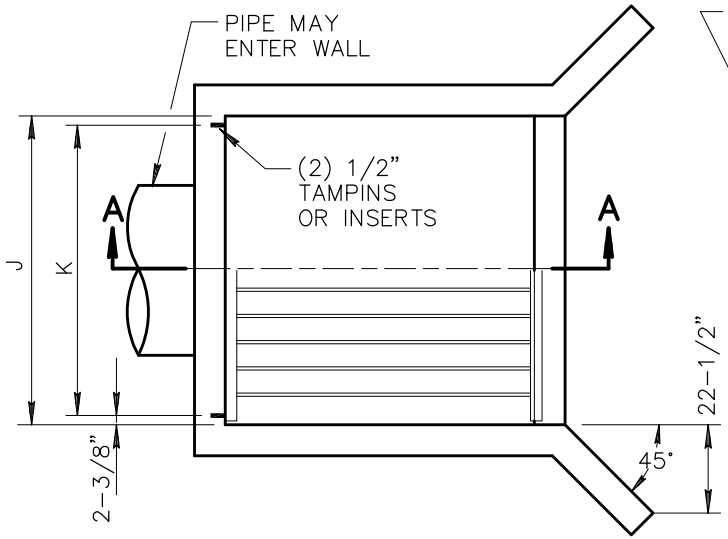

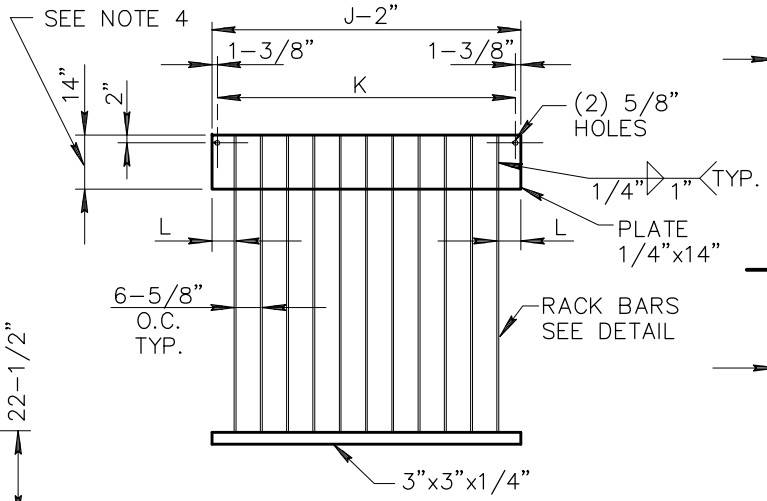

TRASH RACK

POURED WALLS

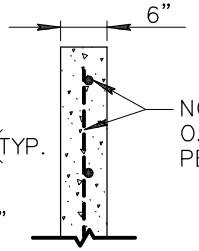

NO. 4 REINFORCED BARS 12" O.C. BOTH WAYS, CLASS 'A' CONC PER SECT. 505, 725 & 727.

BLOCK WALLS

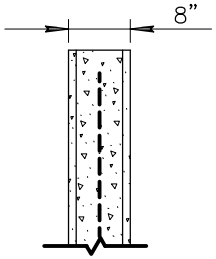

BLOCK HEADWALL TO HAVE ONE NO.4 REINF. BAR CENTERED IN EACH CORE FOR FULL HEIGHT AND CORES FILLED WITH CONCRETE OR CEMENT GROUT (3:1 RATIO). ALL BLOCKS TO BE JOINTED WITH MORTAR. PLASTERED ON EXPOSED SURFACES THEN SPRAY WITH WHITE PIGMENTED CURING COMPOUND. SECT. 510, 727 & 776.

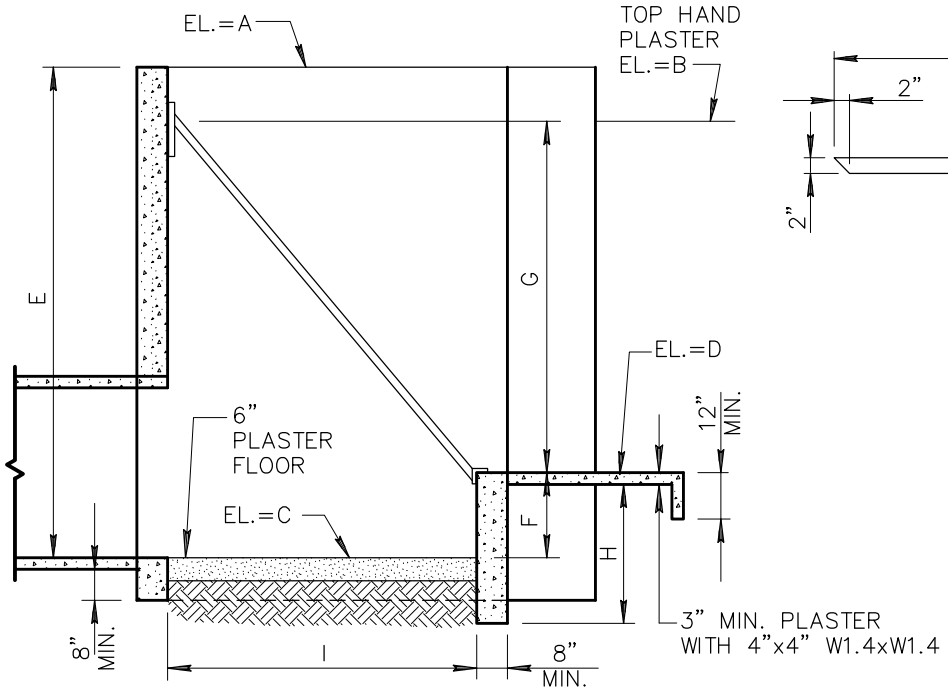

SECTION A-A

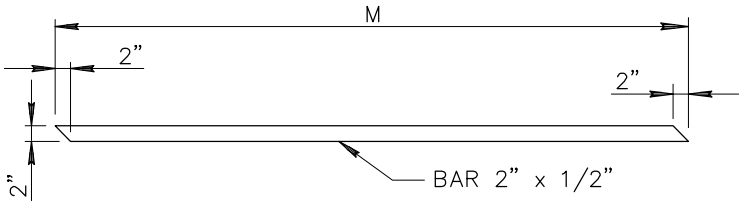

RACK BARS

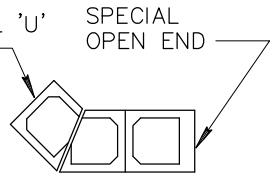

45° BLOCK CORNER

NOTES:

1. REMOVE ALL SCALE FROM RACK BARS. METAL SPRAY OR PAINT WITH ONE COAT ZINC CHROMATE OR RED LEAD PRIMER (INDUSTRIAL QUALITY). OVERCOAT WITH GREY INDUSTRIAL ENAMEL SECT. 790.
2. SHAPE, COMPACT AND PLASTER NEW DITCH FROM HEADWALL TO UNDISTURBED EXISTING DITCH. PLASTER TO EXTEND TO MINIMUM ELEVATION NOTED 3 FEET BEYOND CONNECTION TO UNDISTURBED EXISTING DITCH.
3. ELEVATIONS A, B, C & D AND DIMENSIONS E, F, G, H, I, J, K, L & M WILL BE SHOWN ON PLANS. DIMENSIONS SHOULD PROVIDE STANDARD SIZE BLOCK.
4. 14" PLATE SHALL NOT EXTEND BELOW TOP OF PIPE.

DETAIL NO.				REVISED	DETAIL NO.
502-1	MARICOPA ASSOCIATION of GOVERNMENTS	STANDARD DETAIL ENGLISH	TRASH RACK	01-01-1998	502-1

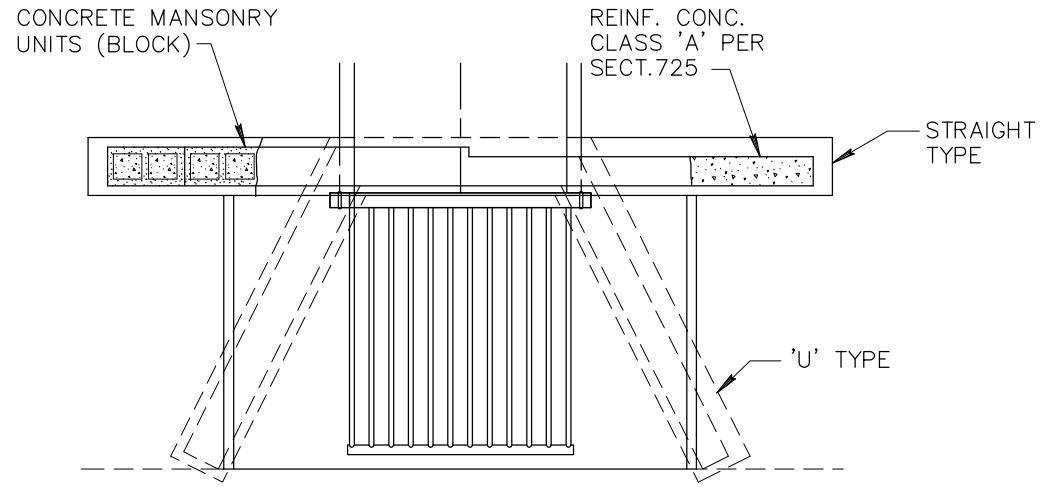

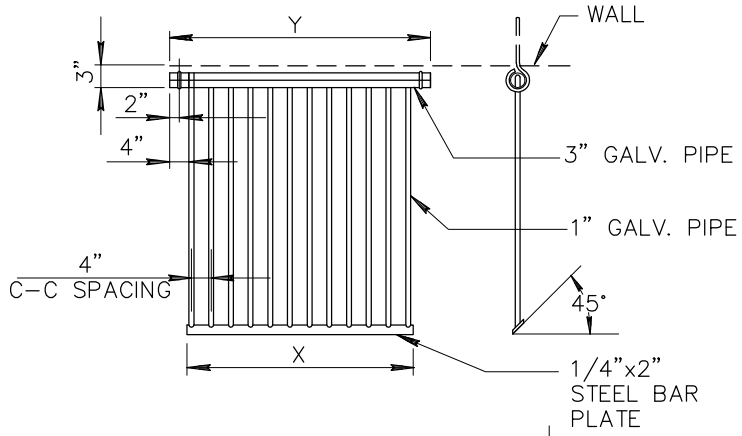

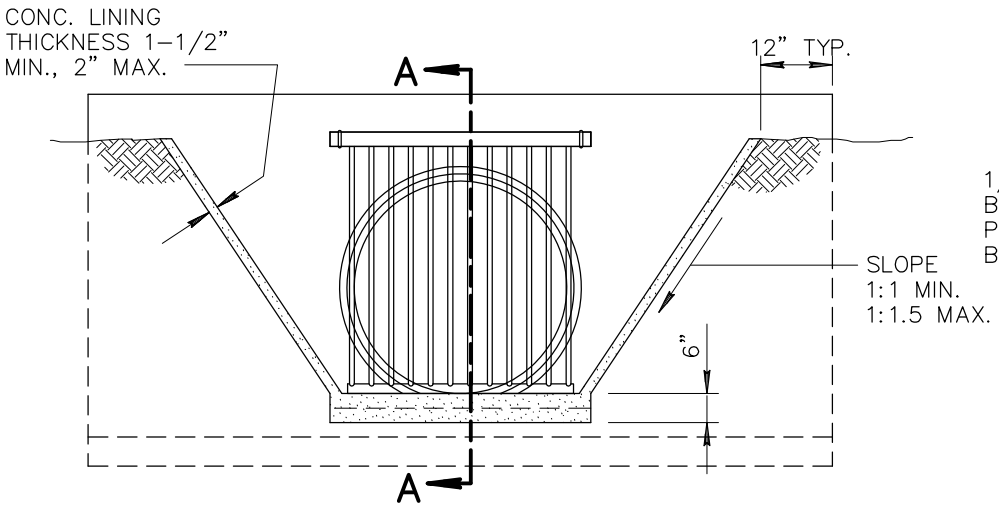

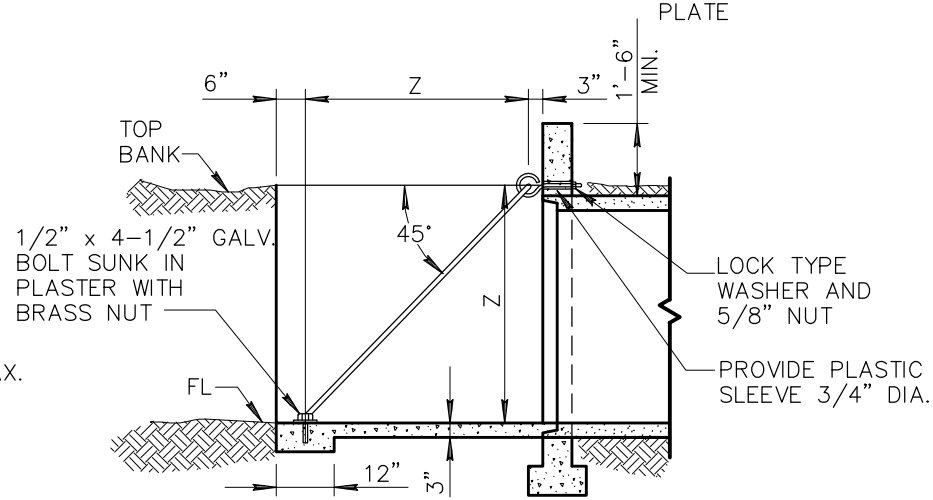

SECTION A-A

TYPE BASED ON PIPE SIZE						
TYPE	PIPE SIZE	NO. OF BARS	LENGTH OF BARS	DIMENSIONS		
				X	Y	Z
A	18"	6	3'-7"	1'-9"	2'-5"	2'-5"
	24"	8	3'-7"	2'-5"	3'-1"	2'-5"
B	30"	10	4'-4•1/4"	3'-1"	3'-9"	2'-11•1/2"
C	36"	10	5'-1•1/2"	3'-1"	3'-9"	3'-6"
D	42"	12	5'-10•5/8"	3'-9"	4'-5"	4'-0•1/2"
E	48"	14	6'-7•3/4"	4'-5"	5'-1"	4'-7"

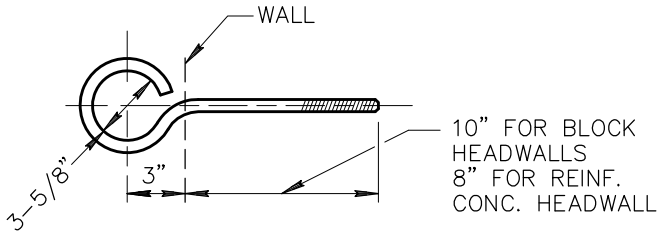

EYE BOLT

DETAIL NO.				REVISED	DETAIL NO.
502-2	MARICOPA ASSOCIATION of GOVERNMENTS	STANDARD DETAIL ENGLISH	TRASH RACK	01-01-2004	502-2

NOTE:
PAINT COVER BOTH SIDES ONE PRIME COAT, TWO FINISH COATS, SECT. 790, PAINT NO. 9

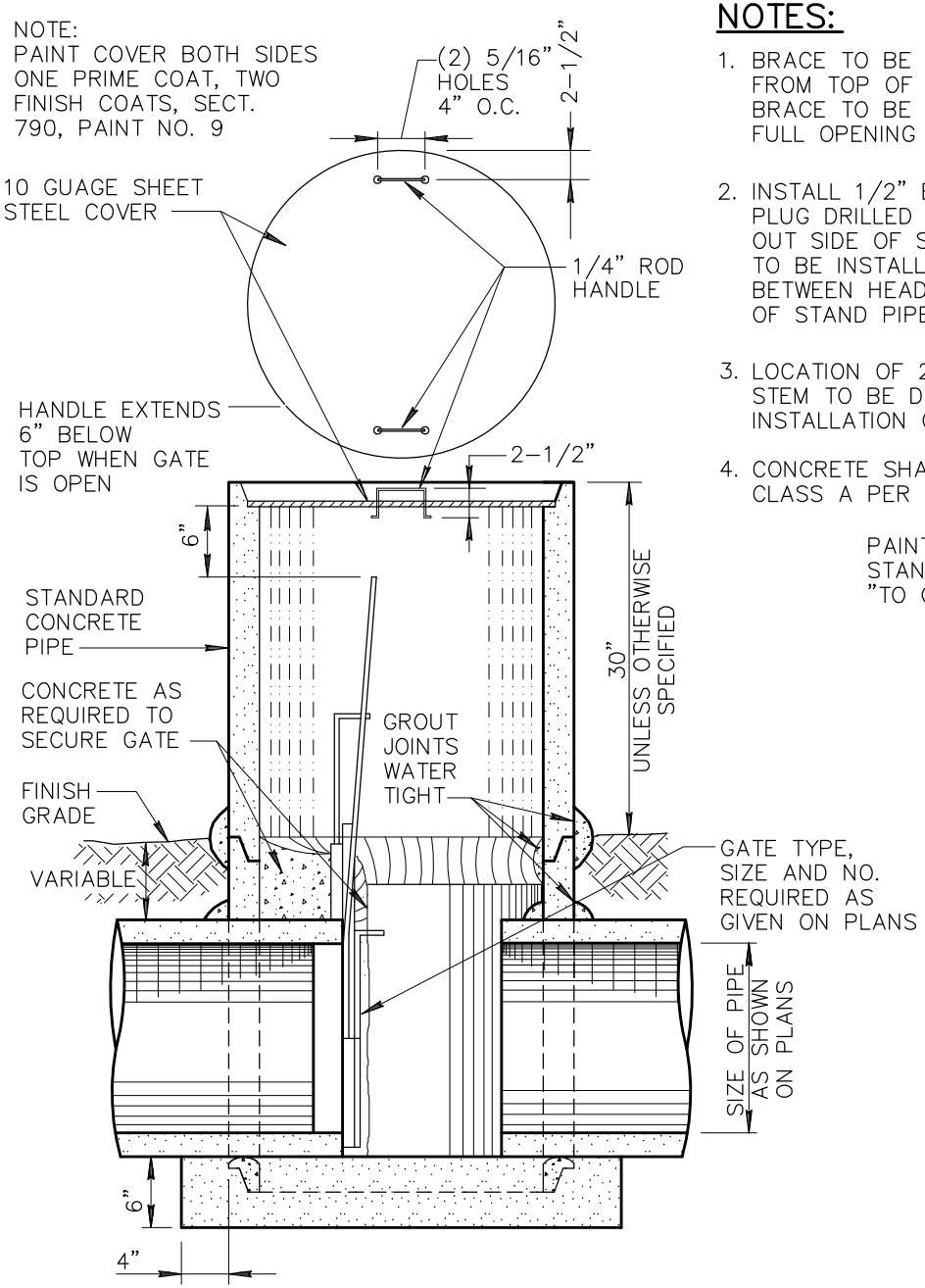

TYPE 'A'

NOTES:

1. BRACE TO BE INSTALLED EVERY 2' FROM TOP OF HEADGATE FRAME. BOTTOM BRACE TO BE HIGH ENOUGH TO ENABLE FULL OPENING OF HEADGATE.
2. INSTALL 1/2" BOLTS INTO LEAD PLUG DRILLED TO WITHIN 1" OF OUT SIDE OF STANDPIPE. SPACERS TO BE INSTALLED AT EACH BOLT BETWEEN HEADGATE FRAME AND INSIDE OF STAND PIPE.
3. LOCATION OF 2" HOLE FOR GATE STEM TO BE DETERMINED AFTER INSTALLATION OF GATE.
4. CONCRETE SHALL BE CLASS A PER SECT. 725.

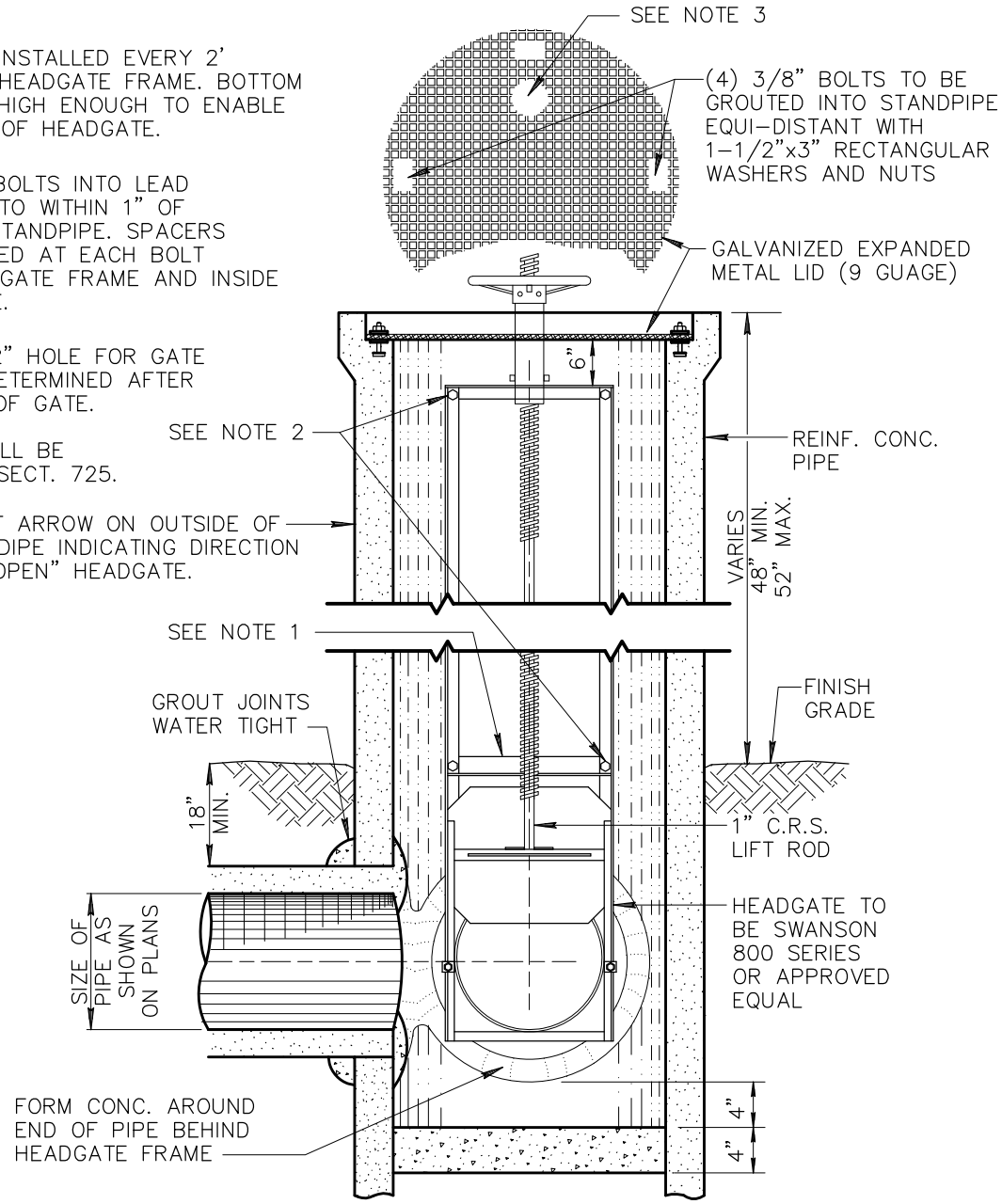

TYPE 'B'

DETAIL NO.		STANDARD DETAIL		REVISED	DETAIL NO.
503	MARICOPA ASSOCIATION of GOVERNMENTS	ENGLISH	IRRIGATION STANDPIPE	01-01-1998	503

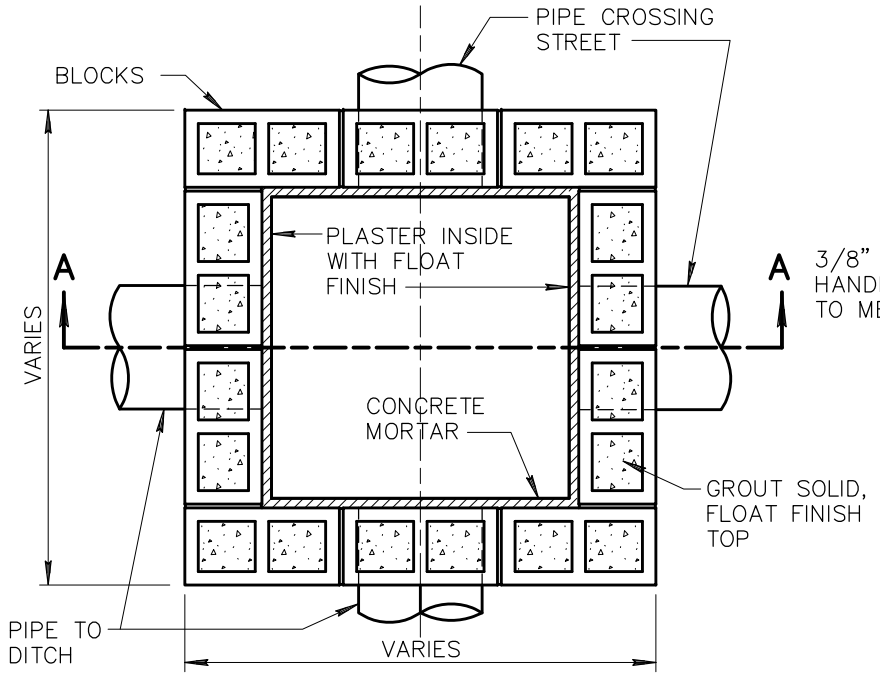

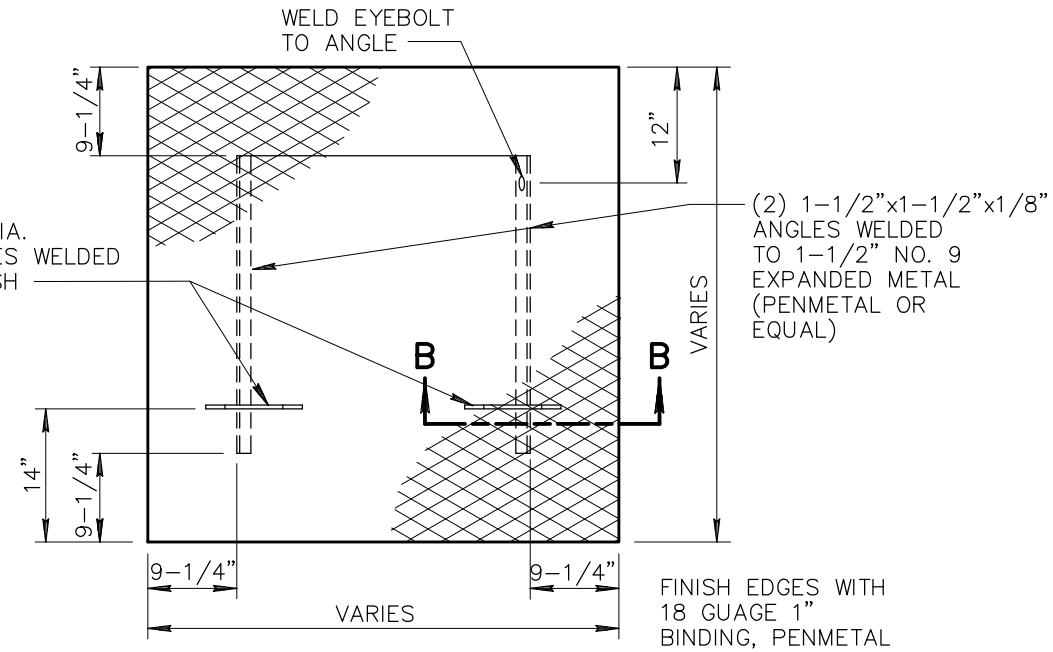

PLAN OF COVER

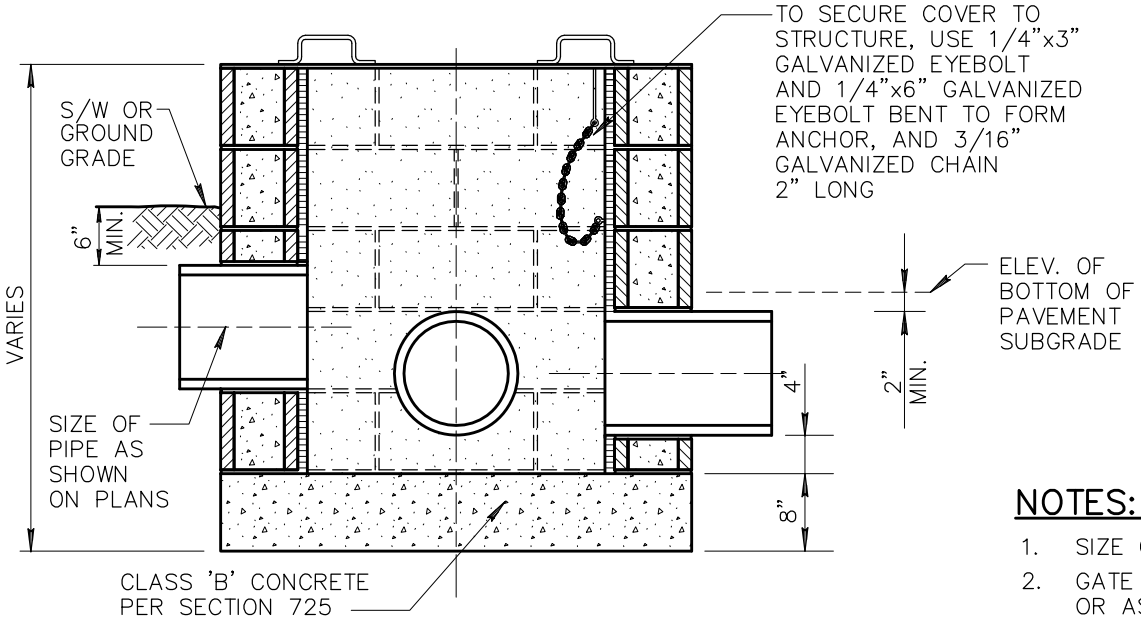

SECTION A–A

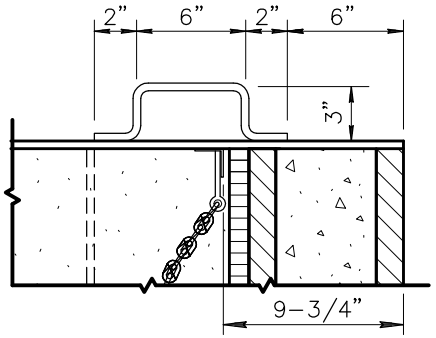

SECTION B–B

NOTES:

1. SIZE OF JUNCTION BOX TO BE DETERMINED BY THE ENGINEER.
2. GATE TYPE, SIZE AND NUMBER REQUIRED AS SHOWN ON PLANS OR AS SPECIFIED.
3. CONCRETE MASONRY UNITS (BLOCK) PER SECT. 510, 775 & 776

DETAIL NO.				REVISED	DETAIL NO.
504	MARICOPA ASSOCIATION of GOVERNMENTS	STANDARD DETAIL ENGLISH	CONCRETE BLOCK JUNCTION BOX	01-01-1998	504

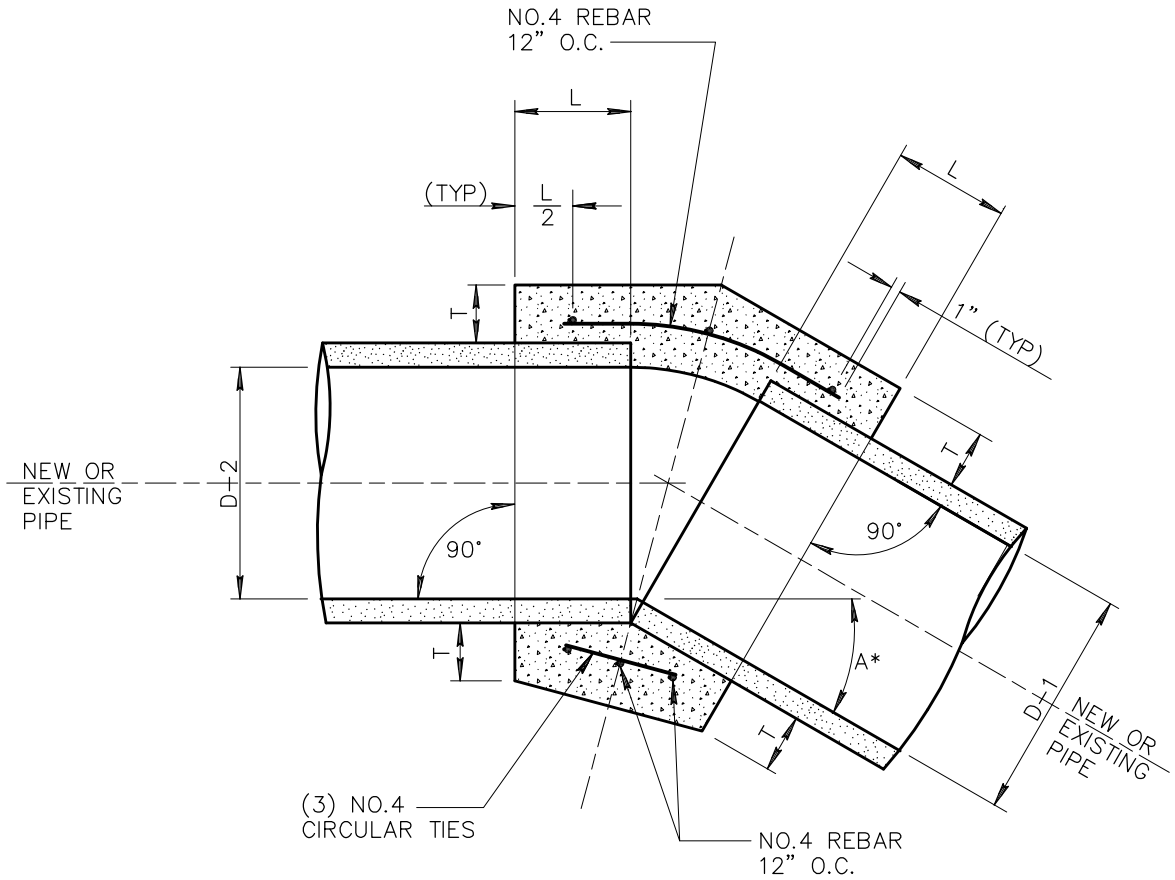

NOTES:

1. A CONCRETE COLLAR IS REQUIRED WHERE PIPES OF DIFFERENT DIAMETERS OR MATERIALS ARE JOINED, OR WHERE THE CHANGE IN ALIGNMENT OR GRADE EXCEEDS THAT ALLOWED FOR ON ORDINARY JOINTS.
2. WHERE PIPES OF DIFFERENT DIAMETERS ARE JOINED WITH A CONCRETE COLLAR, L AND T SHOULD BE THOSE OF THE LARGER PIPE. D=D−1, OR D−2 WHICHEVER IS GREATER.
3. FOR PIPE SIZES NOT LISTED AND LESS THAN 66" USE NEXT SIZE LARGER.
4. OMIT REINFORCING ON PIPE 24" OR LESS IN DIAMETER.
5. WHERE REINFORCING IS REQUIRED, THE DIAMETER OF THE CIRCULAR TIES SHALL BE....
   OUTSIDE DIAMETER OF PIPE+T.
6. FIELD CLOSURES OF PIPE OF THE SAME DIAMETER AND WITHOUT CHANGE IN GRADE OR ALIGNMENT SHALL BE MADE WITH A CONCRETE COLLAR.
7. CONCRETE SHALL BE CLASS B PER SECT. 725.

A*=ANGLE OF DEFLECTION

TABLE		
D	L	T
12"	1.0'	4"
18"	1.0'	5"
24"	1.0'	6"
36"	1.5'	8"
48"	1.5'	10"
57"	1.5'	10"
60"	1.75'	11"
66"	1.75'	11"

DETAIL NO.			REVISED	DETAIL NO.
505	MARICOPA ASSOCIATION of GOVERNMENTS — STANDARD DETAIL ENGLISH	CONCRETE PIPE COLLAR	01-01-1998	505

NOTE:
CONTRACTOR MAY USE PRECUT FITTINGS IF DESIRED.
BID ITEM INCLUDES LATERAL PIPE, RISER, PAD, VALVE, LABOR AND INCIDENTAL MATERIAL REQUIRED FOR INSTALLATION.

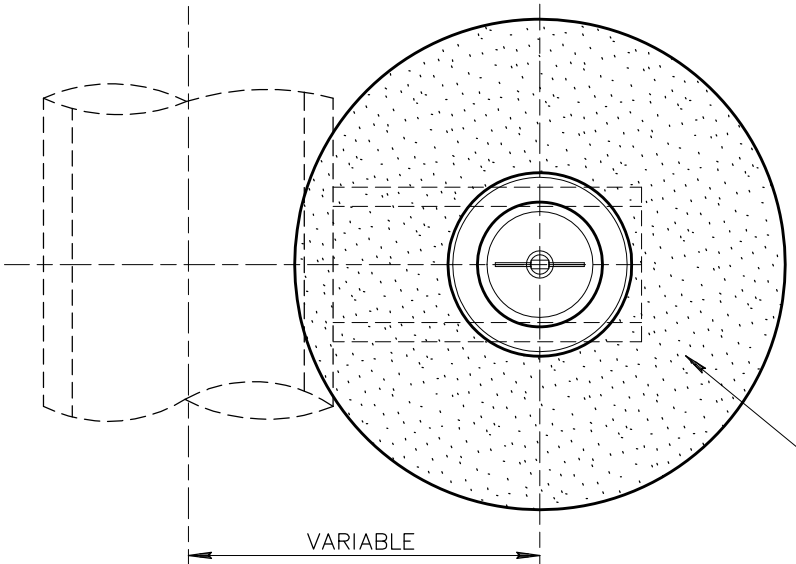

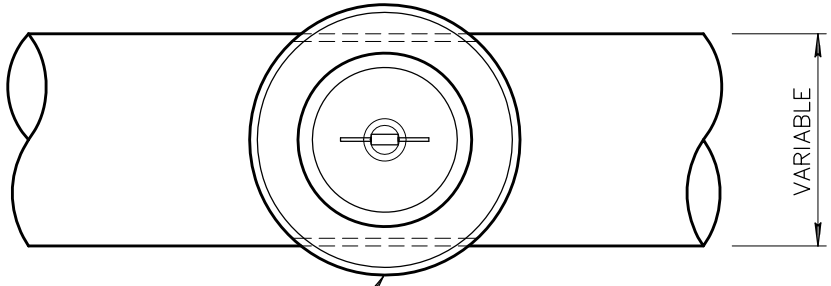

CONSTRUCT OPTIONAL CONCRETE SCOURING BASIN AROUND VALVE ASSEMBLY WHERE SPECIFIED

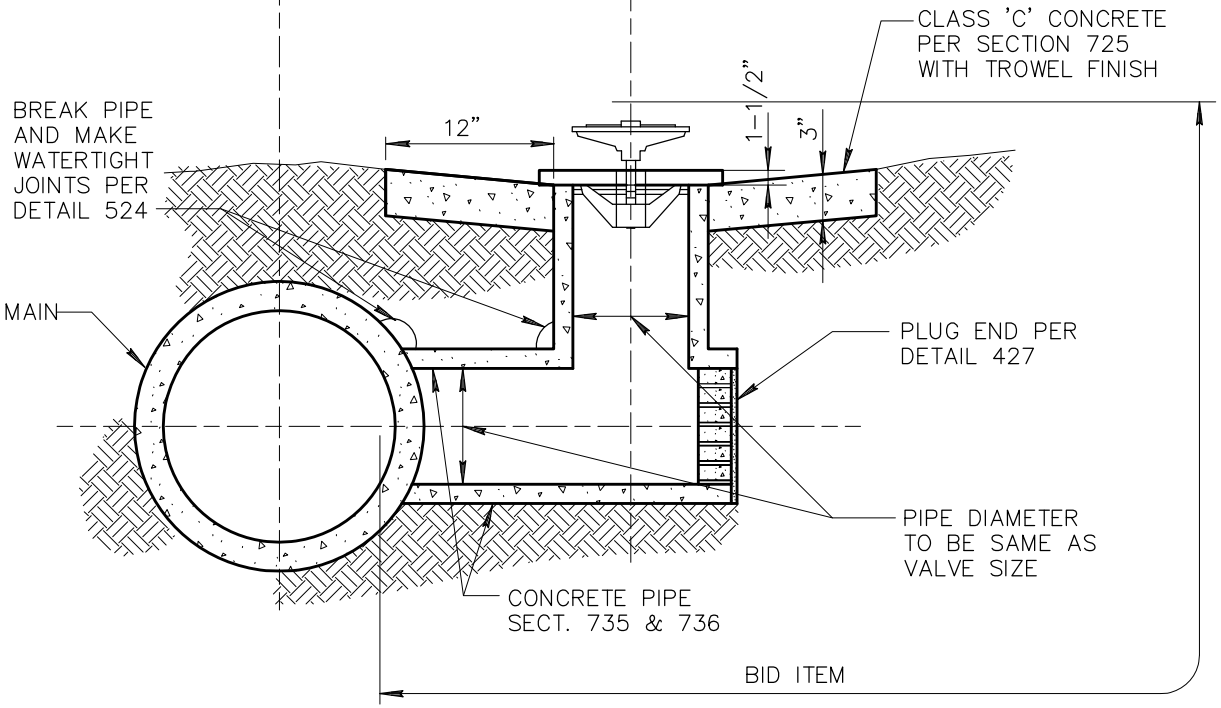

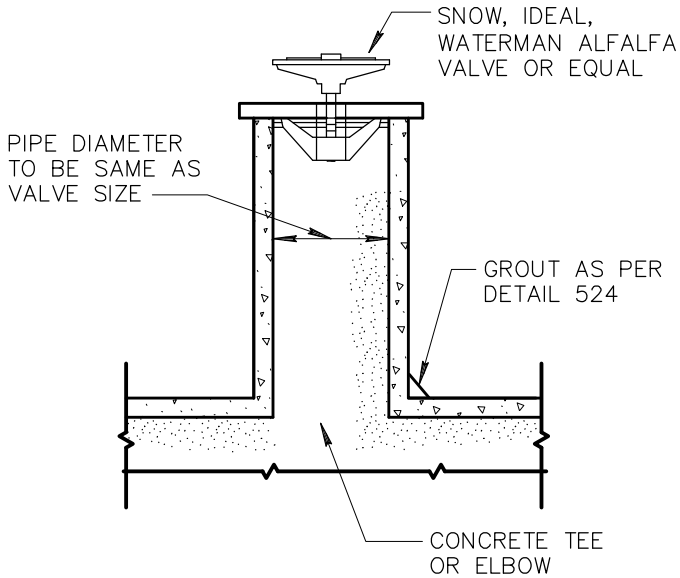

DETAIL NO.				REVISED	DETAIL NO.
506	MARICOPA ASSOCIATION of GOVERNMENTS	STANDARD DETAIL ENGLISH	IRRIGATION VALVE INSTALLATION	01-01-1998	506

NOTES:

1. THIS DETAIL SHALL BE REQUIRED WHEN NEW OR EXISTING PIPE INSTALLATIONS WILL BE SUBJECT TO DAMAGE ANYTIME IN THE FUTURE DUE TO LACK OF PROPER COVER, AS DETERMINED BY THE ENGINEER.

2. FOR PIPE OVER 18" I.D. WOOD, METAL OR GYPSUM BOARD FORMS MUST BE USED TO FORM THE SIDES OF THE ENCASEMENT. GYPSUM BOARD FORMS MAY BE LEFT IN THE GROUND BELOW THE TOP OF THE ENCASEMENT. THIS SHALL BE OPTIONAL WITH POURING AGAINST TRENCH WALLS FOR ENCASEMENT OF 18" AND SMALLER PIPE.

3. FOR ALL SITUATIONS WHERE SIDE FORMS ARE USED, TRENCH WALLS SHALL BE OVER-EXCAVATED TO ALLOW SUFFICIENT ROOM TO OPERATE PROPER MECHANICAL COMPACTION EQUIPMENT.

4. CONCRETE WHICH SPILLS BEYOND 12" FROM THE SIDES OF THE PIPE FOR ANY REASON SHALL BE REMOVED BACK TO THE PROPER LINE PRIOR TO BACKFILLING.

5. SEE SECTION 601 FOR TRENCH PREPARATION.

6. CONCRETE TO BE CLASS 'A' PER SECTION 725.

7. COVER TO BE APPROVED BY ENGINEER.

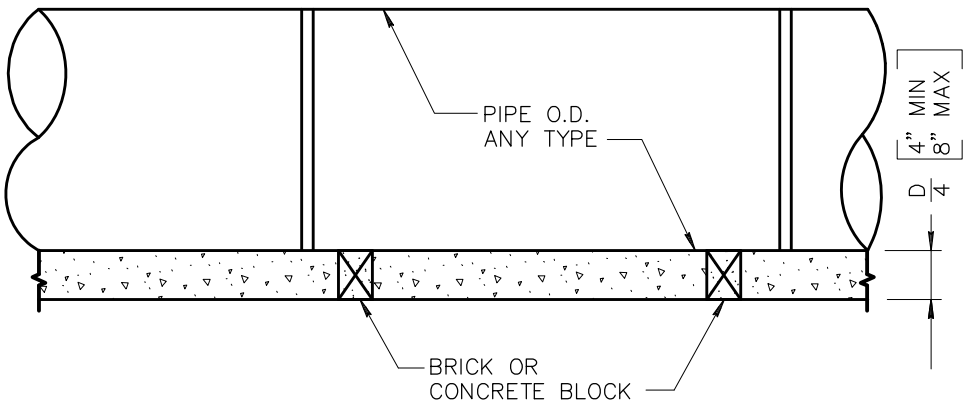

LONGITUDINAL SECTION

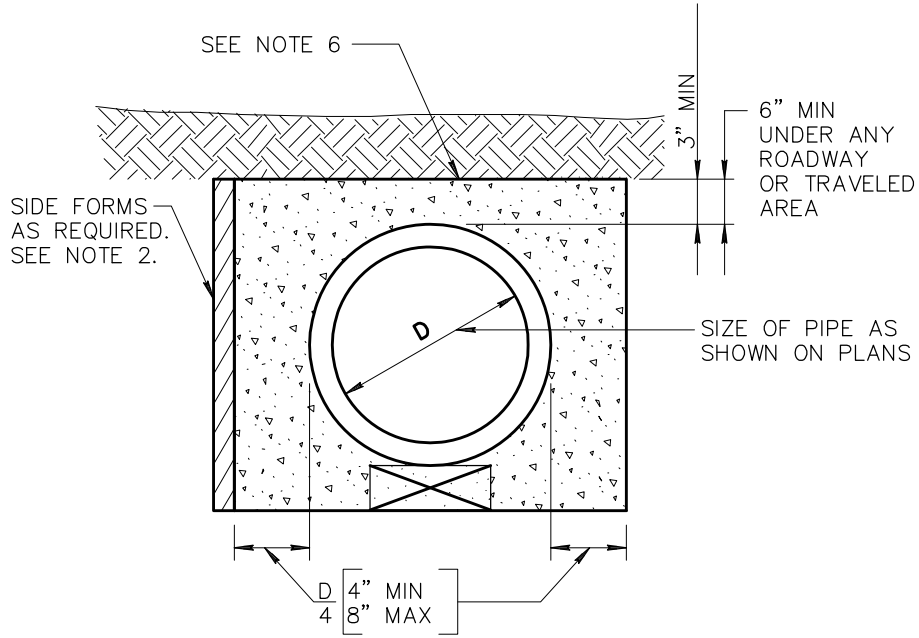

END SECTION

DETAIL NO.				REVISED	DETAIL NO.
507	MARICOPA ASSOCIATION of GOVERNMENTS	STANDARD DETAIL ENGLISH	ENCASED CONCRETE PIPE (FOR SHALLOW INSTALLATION)	01-01-2017	507

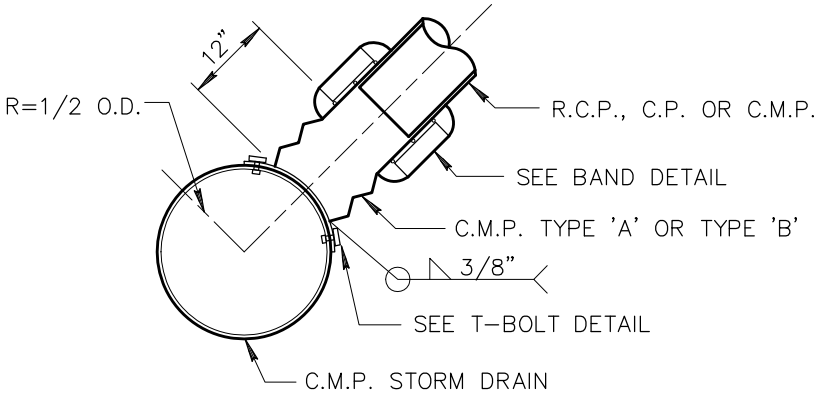

CONNECTOR CROSS SECTION

NOTE:
USE 5/8" WASHER AND NUT, ALL PIECES (NUTS, WASHERS, AND FABRICATED BOLTS) TO BE GALVANIZED AS PER A.S.T.M. A-123 LATEST REVISION.

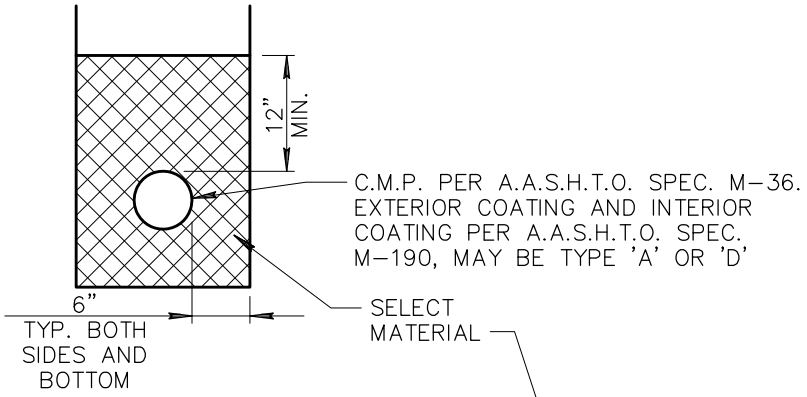

SECTION A-A

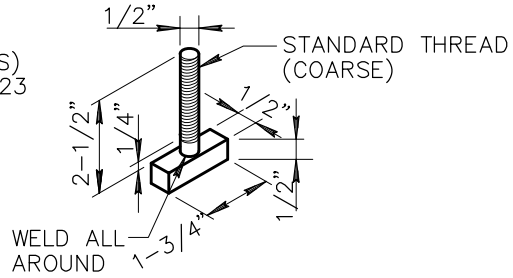

T-BOLT

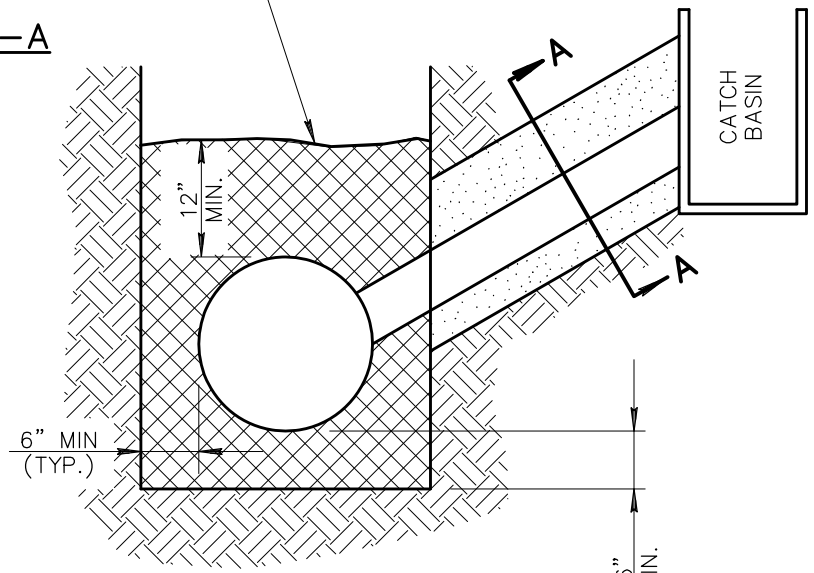

C.M.P. MAIN STORM DRAIN

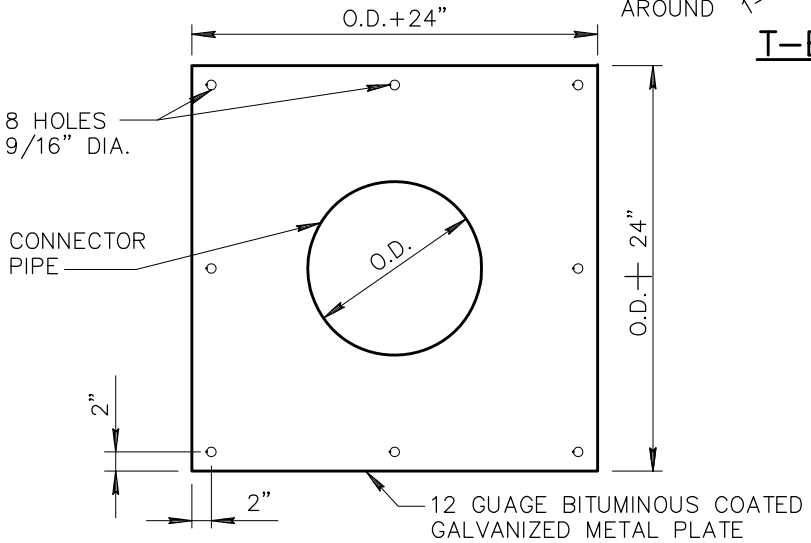

C.M.P. CONNECTION TO MAIN STORM DRAIN 24" PIPE AND SMALLER

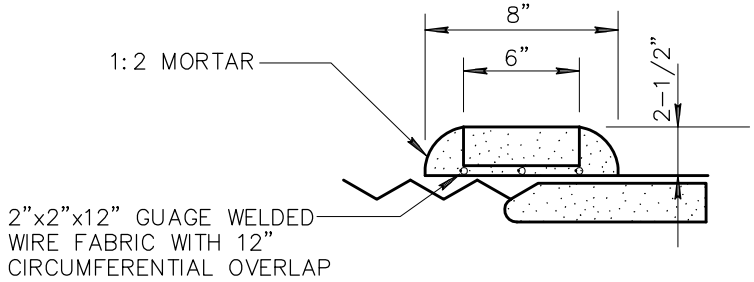

BAND DETAIL

DETAIL NO.				REVISED	DETAIL NO.
510	MARICOPA ASSOCIATION of GOVERNMENTS	STANDARD DETAIL ENGLISH	CORRUGATED METAL PIPE AND INSTALLATION	01-01-1998	510

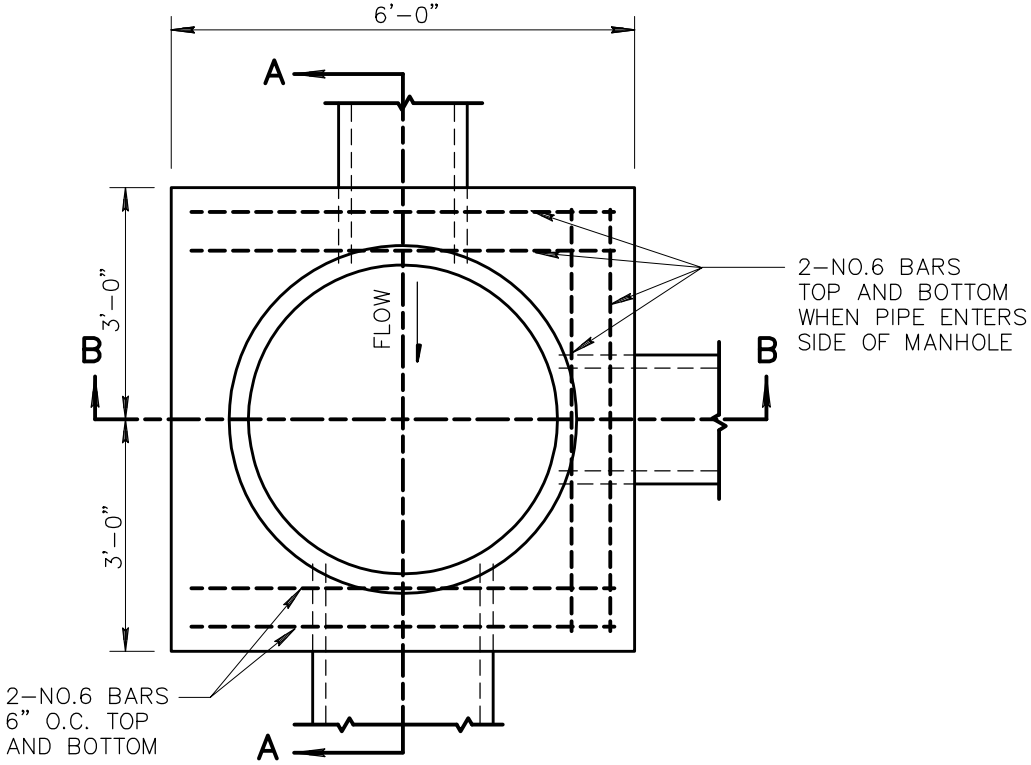

PLAN

NOTES

1. ALL CONCRETE TO BE CLASS 'A' PER SECT. 725, 505.
2. MATCH SPRING LINES OF PIPE ENTERING MANHOLE UNLESS OTHERWISE NOTED.
3. CUT PIPES TO ALLOW SETTING OF 4' DIA. CYLINDRICAL FORM FROM 6" ABOVE MAIN LINE PIPE TO SPRING LINE. CUT PIPE 2" LARGER THAN FORM TO ALLOW 2" CONCRETE OVER ENDS OF ALL CUT PIPE.
4. INVERT AND BASE OF MANHOLE TO BE POURED AND INVERT TO BE SHAPED BY HAND TO MAKE SMOOTH TRANSITION. FINISH WITH RUBBER FLOAT.
5. CENTER MANHOLE ON PIPE JOINT WHERE PIPE CHANGES SIZES, LEAVING A GAP OF 12" MINIMUM, 24" MAXIMUM.

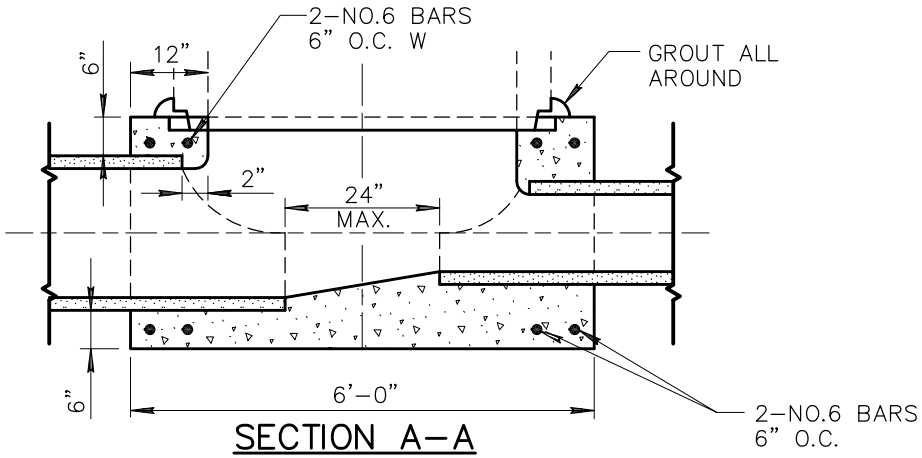

SECTION A-A

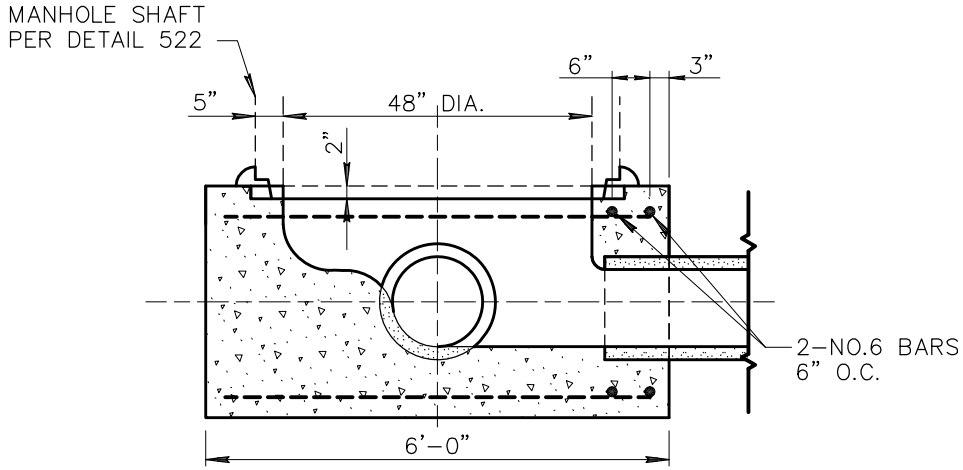

SECTION B-B

DETAIL NO.		STANDARD DETAIL		REVISED	DETAIL NO.
520	MARICOPA ASSOCIATION of GOVERNMENTS	ENGLISH	STORM DRAIN MANHOLE BASE (48" AND SMALLER)	01-01-1998	520

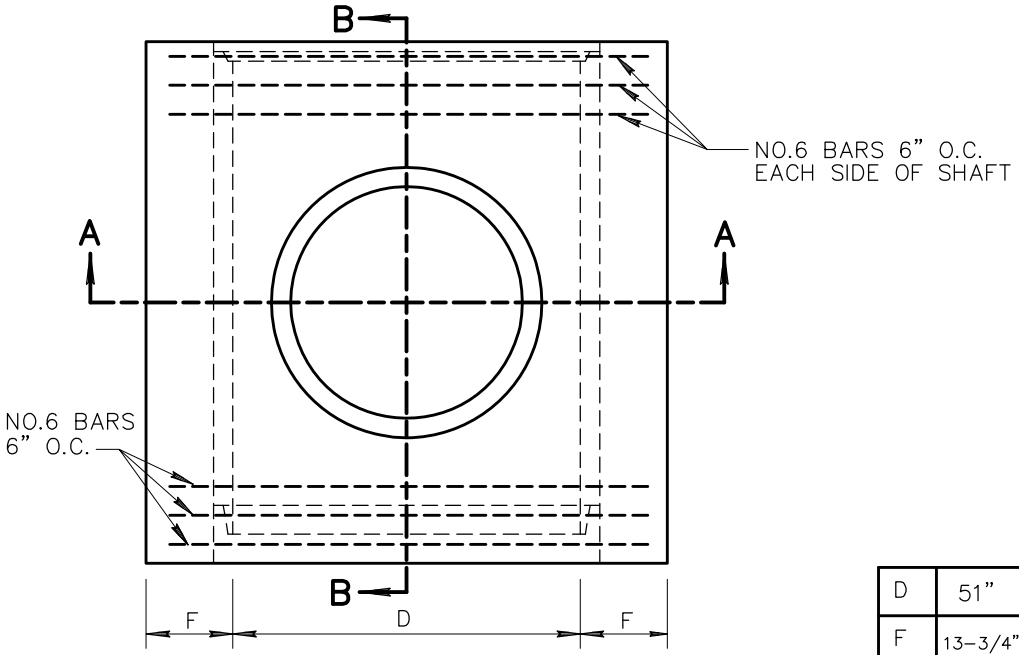

PLAN

NOTES:

1. LINE PIPE AND STUB MAY BE CAST MONOLITHICALLY OR STUB MAY BE CAST ON TO LINE PIPE SECTION PRIOR TO COMPLETE CURING.
2. ALL LINE PIPE REINFORCEMENT SHALL BE TURNED UP INTO STUB.
3. THE VERTICAL STUB TO BE A.S.T.M. C-76 CLASS II WALL 'A' AND THE HORIZONTAL PIPE TO BE EQUAL TO STRENGTH OF PIPE ENTERING MANHOLE.
4. ALL REINFORCING STEEL SHALL CLEAR FACE OF CONCRETE BY 1-1/2" UNLESS SHOWN OTHERWISE.
5. CONCRETE ENCASEMENT SHALL BE CLASS 'A' PER SECT. 725 AND 505.

TABLE OF VALUES FOR 'F' & 'D'

D	51"	54"	57"	60"	63"	66"	69"	72"	78"	84"	90"	96"
F	13-3/4"	14-1/2"	15"	15-1/2"	16-1/4"	16-3/4"	17-1/2"	18"	19-1/4"	20-1/2"	21-3/4"	23"

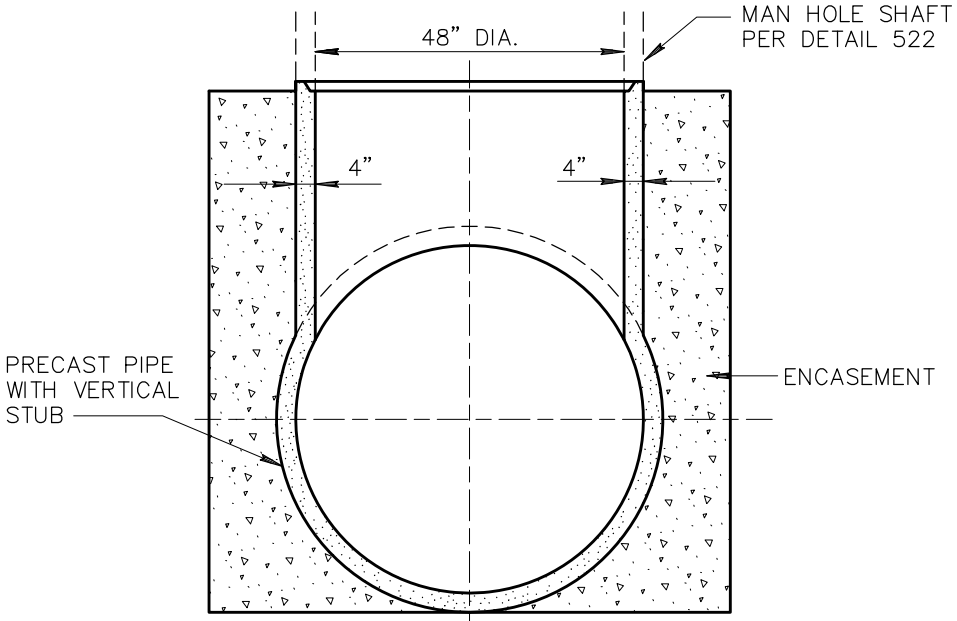

SECTION A-A

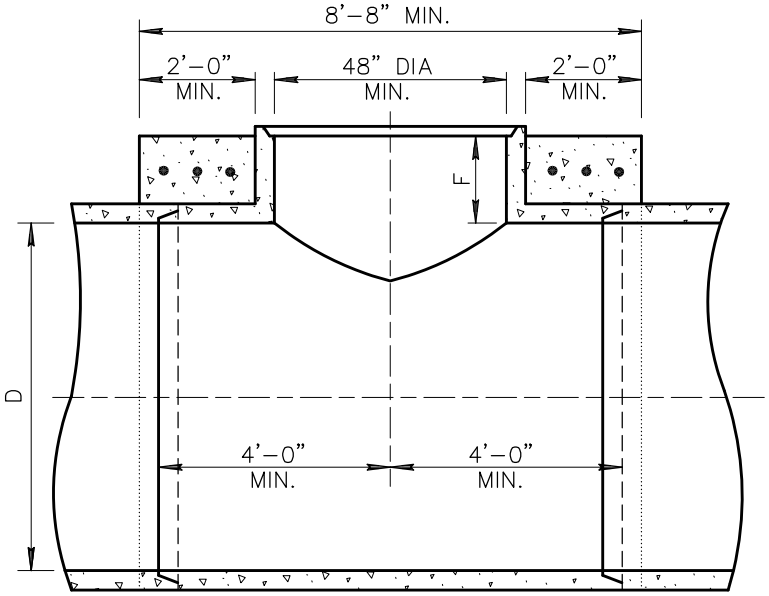

SECTION B-B

DETAIL NO.				REVISED	DETAIL NO.
521	MARICOPA ASSOCIATION of GOVERNMENTS	STANDARD DETAIL ENGLISH	STORM DRAIN MANHOLE BASE (51" OR LARGER)	01-01-1998	521

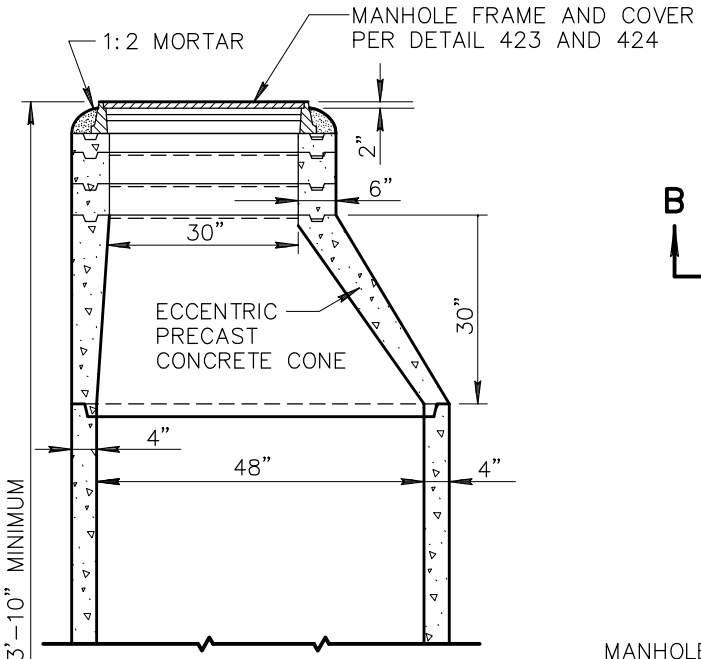

ALL JOINTS SHALL BE FILLED WITH 1:2 MORTAR AND NEATLY POINTED OR WIPED ON INSIDE OF SHAFT.

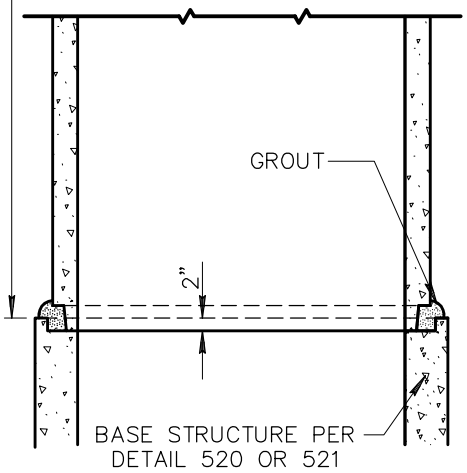

VERTICAL SECTION OF ECCENTRIC MANHOLE SHAFT

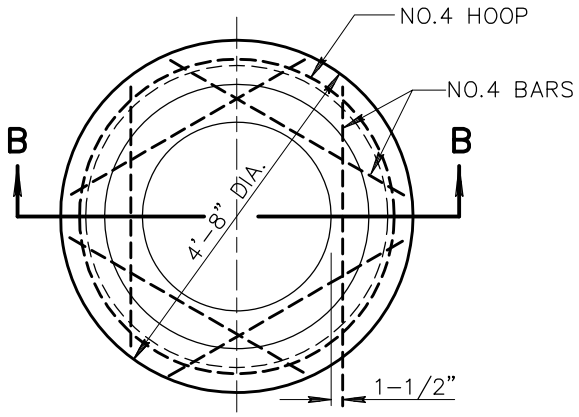

PLAN

USE WHERE THERE IS 3'-10" OR LESS COVER OVER PIPE

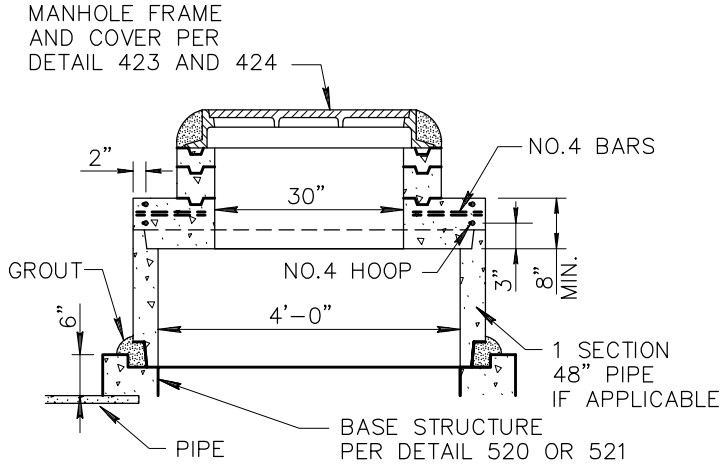

SECTION B-B

SHALLOW MANHOLE

NOTES:

1. PRECAST CONCRETE CONES AND SECTIONS TO BE A.S.T.M. C-478.
2. BRICK MAY BE USED IN LIEU OF OR IN COMBINATION WITH CONCRETE ADJUSTING RINGS.
3. PRECAST CONCRETE SECTIONS 48" DIA PIPE MAY BE FURNISHED IN STANDARD LENGTHS.
4. UNLESS OTHERWISE SHOWN ON PLANS, USE (2) 2-1/2" PRECAST CONCRETE ADJUSTING RINGS ON IMPROVED STREETS AND (4) 2-1/2" RINGS ON UNIMPROVED STREETS.
5. CONCRETE SHALL BE CLASS A PER SECTION 725 AND 505.

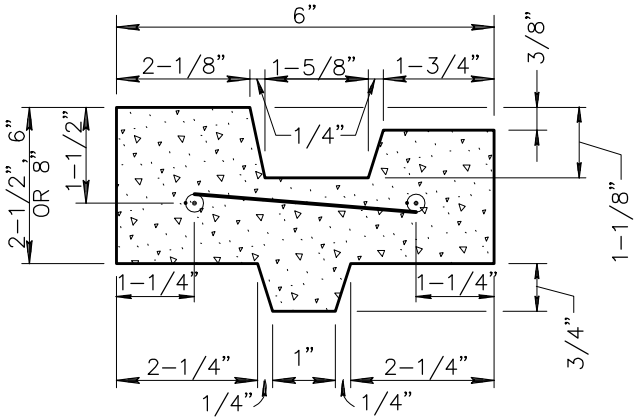

2-1/2" RINGS SHALL BE REINFORCED WITH TWO 1/4" ROUND STEEL HOOPS; 6" AND 8" RINGS SHALL BE REINFORCED WITH FOUR 1/4" HOOPS, TIED WITH NO. 14 A.S.& W. GAUGE WIRE 8" O.C.

REINFORCED CONCRETE ADJUSTING RING

DETAIL NO.				REVISED	DETAIL NO.
522	MARICOPA ASSOCIATION of GOVERNMENTS	STANDARD DETAIL ENGLISH	STORM DRAIN MANHOLE SHAFT	01-01-2015	522

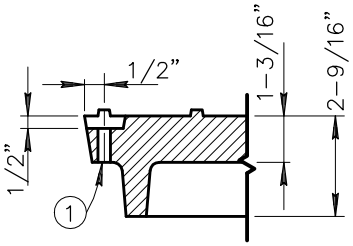

COVER SECTION

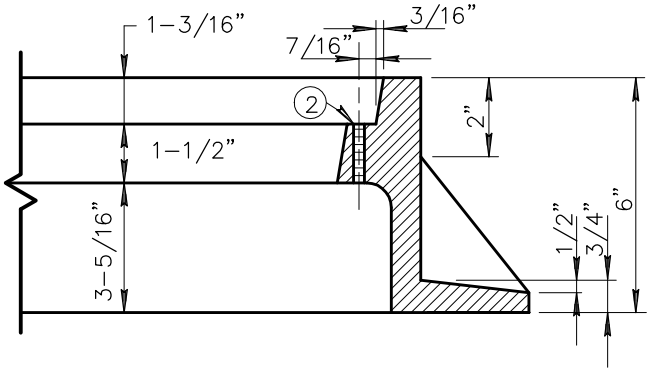

FRAME SECTION

FOR A 30" M.H. OPENING, USE THE STD. WATER TIGHT 30" M.H. FRAME & COVER, AND ANCHOR THE FRAME AS OUTLINED IN THE INSTRUCTIONS NOTED ON THIS SHEET.

FOR A 24" M.H. OPENING, MODIFY THE STD. 24" M.H. FRAME & COVER, FOLLOWING THE NOTED PROCEDURES, ONE THRU FIVE.

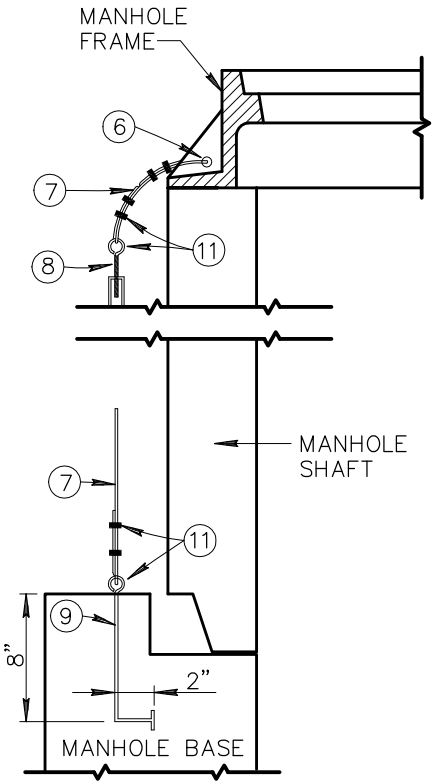

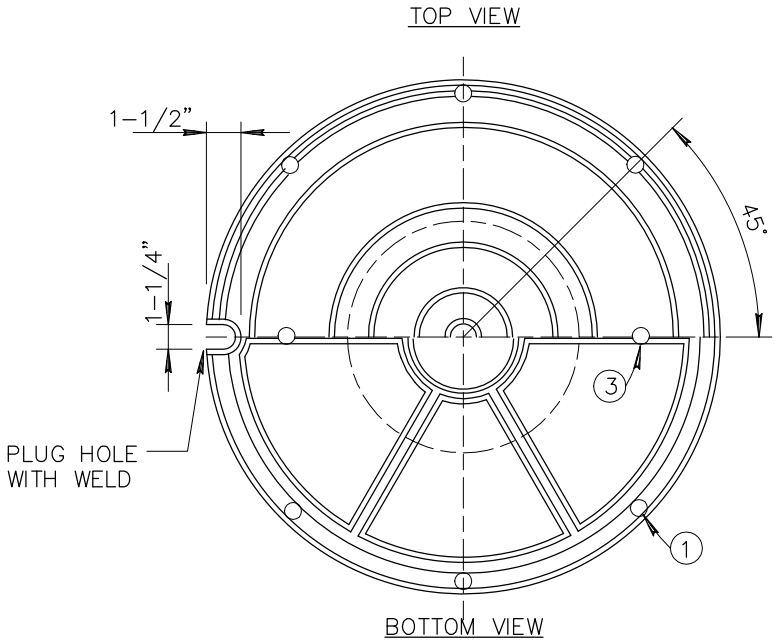

STANDARD 24" M.H. FRAME AND COVER

NOTES:

1. DRILL (8) HOLES 17/32" IN COVER FOR 1/2" CAPSCREWS, COUNTERBORE 1/2" DEEP BY 1-1/8" DIA. TO ACCOMODATE CAPSCREW AND SOCKET WRENCH. SPACE EQUALLY.
2. DRILL (8) HOLES AND TAP FOR 1/2" – 13 THREAD NATIONAL COARSE BOLT.
3. DRILL, TAP AND COUNTERBORE (2) HOLES FOR 1/2" CAPSCREWS TO BE USED FOR LIFTING COVER. PLUG WITH CAPSCREWS.
4. COVER AND FRAME MUST BE MATCHED, DRILLED AND TAPPED IN SETS.
5. CASTING DIMENSIONS GIVEN ABOVE ARE FROM DET. 424, 24" MANHOLE FRAME AND COVER.

BOTH 24" AND 30" FRAMES TO BE ANCHORED AS FOLLOWS:

6. DRILL 1/2" HOLE IN FILLET. DO NOT USE ADJACENT FILLETS.
7. 1/4" STAINLESS STEEL CABLE. SECURED WITH CABLE CLAMPS.
8. 1/2"x9" HOOK AND EYE TURNBUCKLE.
9. 1/2" EYE BOLT WITH 1" DIA. EYE.
10. INSTALL THREE CABLES PER 24" COVER (FOUR CABLES FOR 30" COVERS). EYEBOLTS TO BE SET DIRECTLY BELOW FILLETS USED.
11. TRIPLE WRAP TURNBUCKLES AND CABLE CLAMPS WITH 1" WIDE TAPE, SAFE-T-CLAD, F.O.S. 655, OR APPROVED EQUAL.

DETAIL NO.				REVISED	DETAIL NO.
523-1	MARICOPA ASSOCIATION of GOVERNMENTS	STANDARD DETAIL ENGLISH	PRESSURE MANHOLE	01-01-1998	523-1

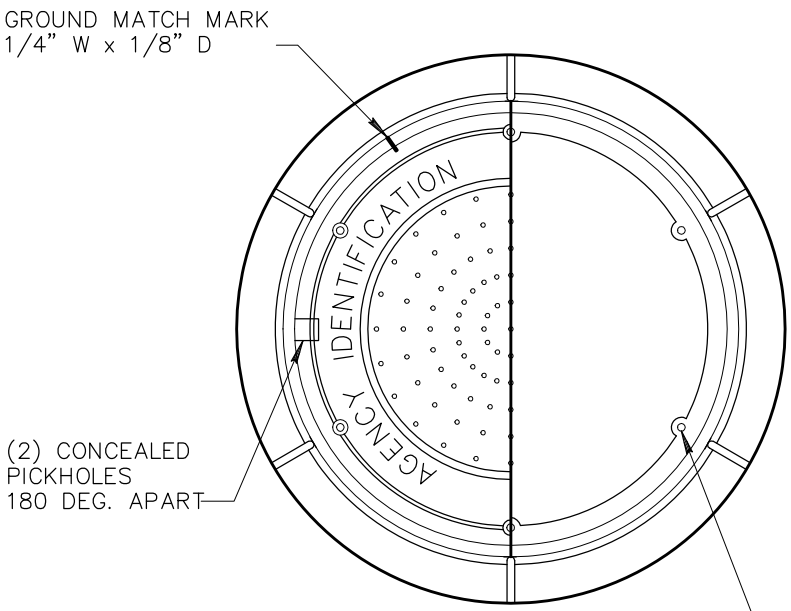

NOTES:

1. DRILL (6) HOLES IN 30" COVER (4 HOLES IN 24" COVER) 17/32" CORED RECESS FOR 1/2" CAPSCREWS. SPACE EQUALLY (304 S.S.)
2. DRILL (6) HOLES IN 30" FRAME (4 HOLES IN 24" FRAME) AND TAP FOR 1/2" – NATIONAL COARSE BOLT (HEX HEAD).
3. COVER AND FRAME MUST BE MATCH MARKED, DRILLED AND TAPPED IN SETS.
4. DIMENSIONS, LETTERING, WEIGHTS AND MATERIALS SHALL CONFORM TO DET. 424.
5. REFER TO DETAIL 523–1 FOR INSTALLATION PROCEDURES.

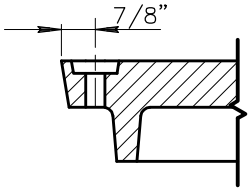

BOLT HOLE DETAIL

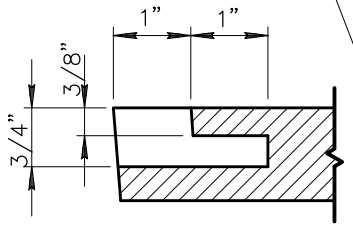

PICKHOLE DETAIL

COVER SECTION

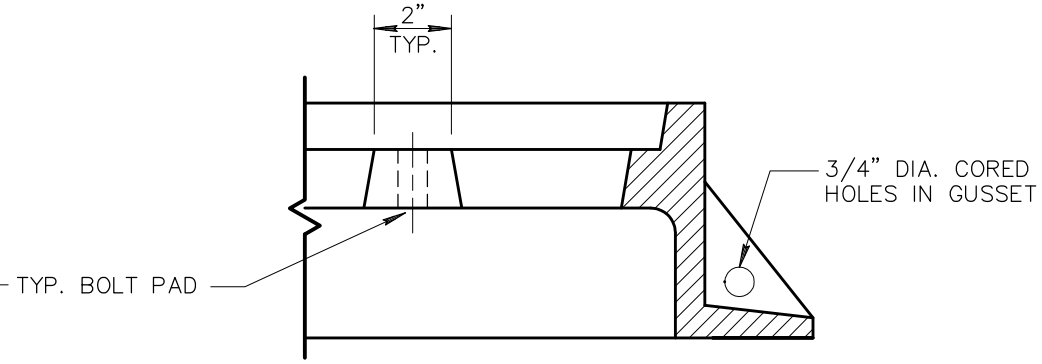

FRAME SECTION

DETAIL NO.				REVISED	DETAIL NO.
523–2	MARICOPA ASSOCIATION of GOVERNMENTS	STANDARD DETAIL ENGLISH	PRESSURE MANHOLE	01–01–1998	523–2

TOP VIEW

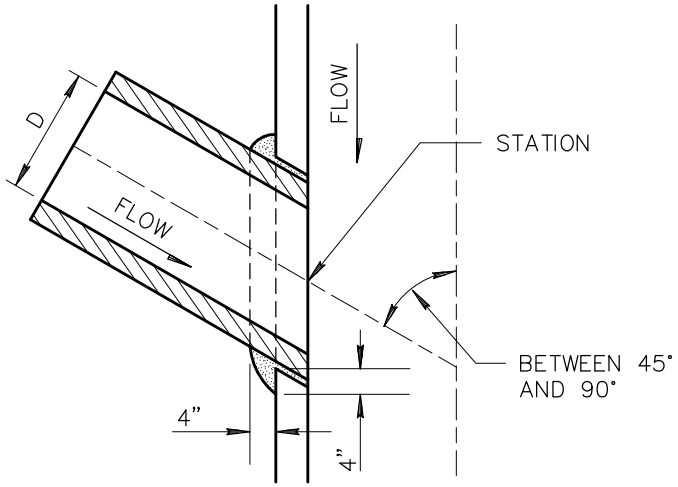

SECTION A–A

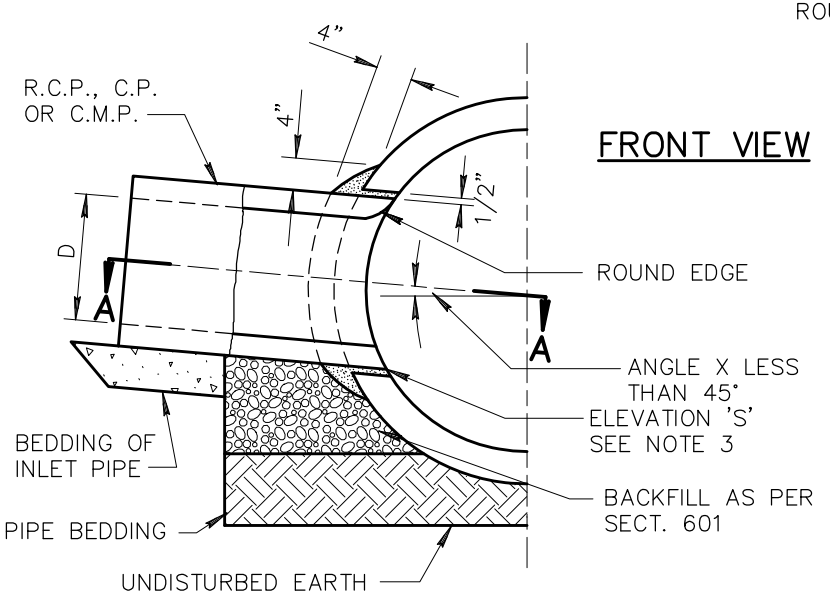

FRONT VIEW

SIDE INLET TYPE 1

FRONT VIEW

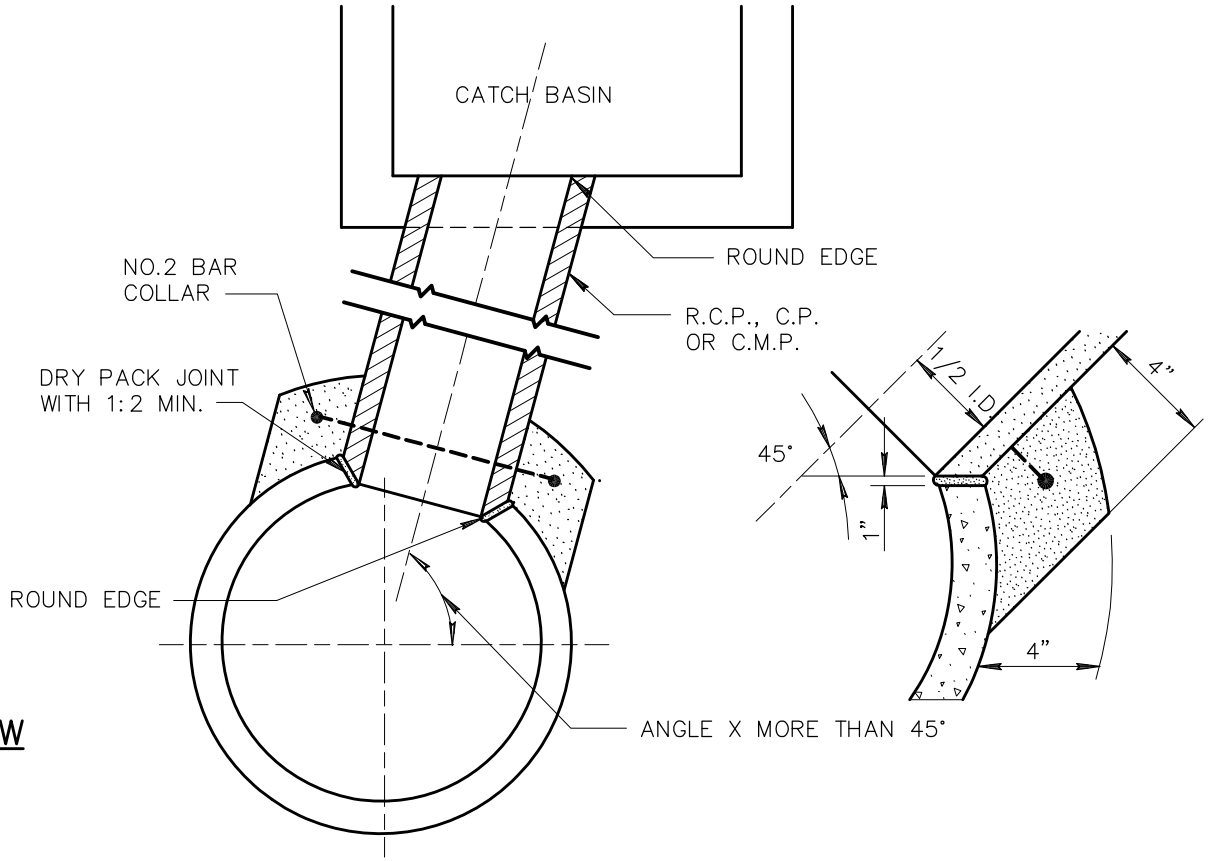

CATCH BASIN ABOVE STORM DRAIN TYPE 2

NOTES:

1. D SHALL BE 24" OR LESS. FOR LARGER VALUE OF D USE MANHOLE OR JUNCTION STRUCTURE.
2. IN NO CASE SHALL THE OUTSIDE DIAMETER OF THE INLET EXCEED ONE HALF THE INSIDE DIAMETER OF THE MAIN STORM DRAIN.
3. CENTERLINE OF INLET SHALL BE ON RADIUS OF MAIN STORM DRAIN EXCEPT WHEN ELEVATION S IS SHOWN ON PLANS.
4. THE MINIMUM OPENING INTO THE STORM DRAIN SHALL BE THE OUTSIDE DIAMETER OF THE CONNECTING PIPE PLUS 1".
5. IF ANGLE X FROM HORIZONTAL IS 45° OR LESS USE TYPE 1. IF ANGLE X IS 45° OR OVER USE TYPE 2.

DETAIL NO.		STANDARD DETAIL		REVISED	DETAIL NO.
524	MARICOPA ASSOCIATION of GOVERNMENTS	ENGLISH	STORM DRAIN LATERAL PIPE CONNECTIONS	01–01–1998	524

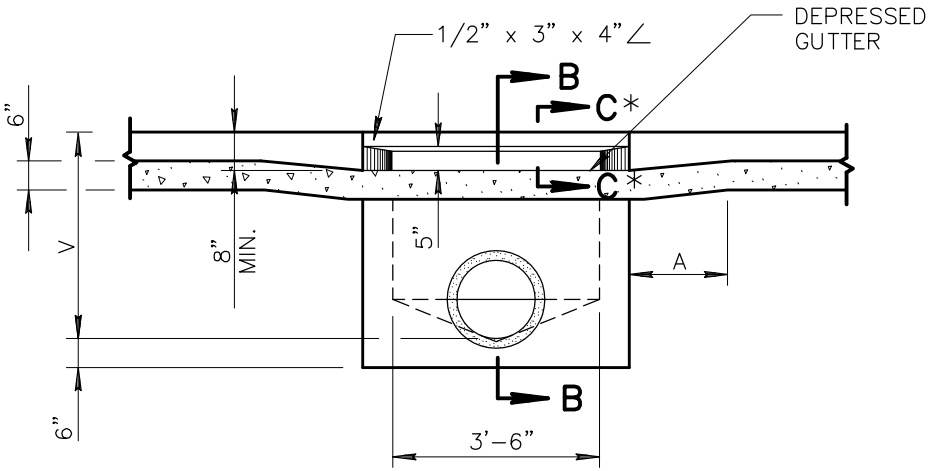

SECTION A-A

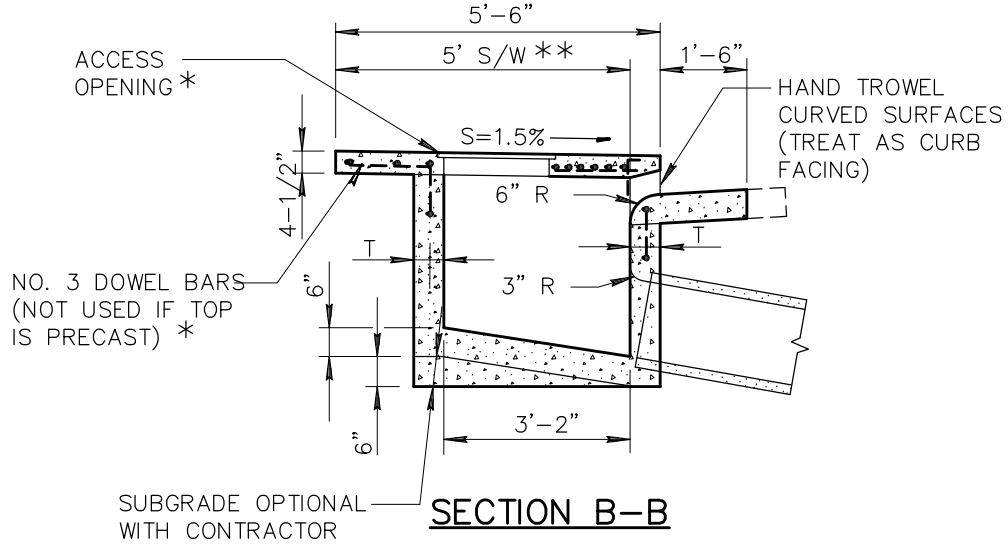

SECTION B-B

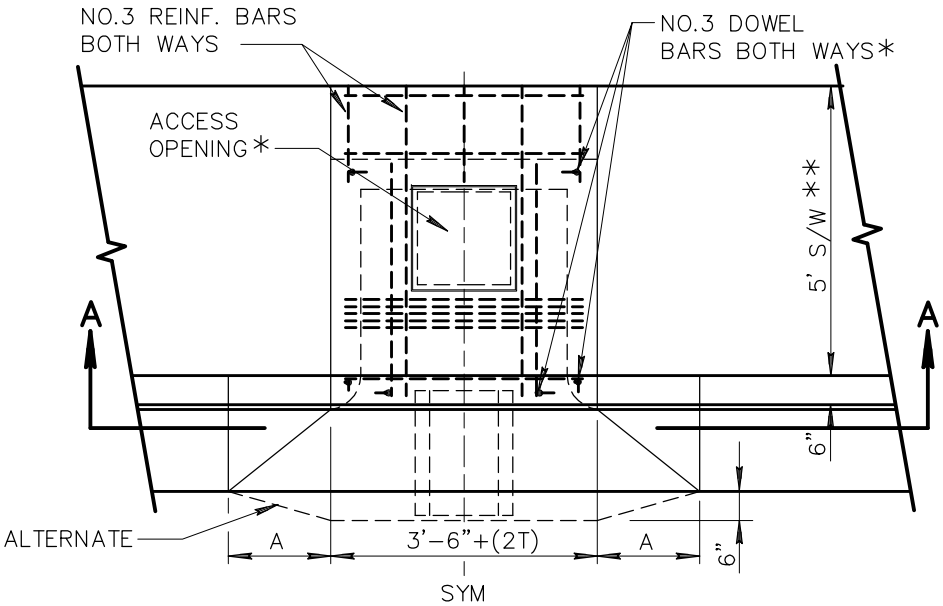

PLAN VIEW

NOTES:

1. THE ENTIRE CATCH BASIN COVER MAY BE POURED IN PLACE OR PRECAST.
2. CONNECTION PIPES MAY BE PLACED IN ANY POSITION AROUND THE WALLS PROVIDED THE POSITION IS CONSISTENT WITH THE PLAN.
3. OUTLET PIPE SHALL BE TRIMMED TO FINAL SHAPE AND LENGTH BEFORE CONCRETE IS POURED.
4. FLOOR OF BASIN SHALL BE TROWELLED TO A HARD SMOOTH SURFACE AND SHALL SLOPE FROM ALL DIRECTIONS TO OUTLET.
5. ALL STRUCTURAL STEEL TO BE PAINTED ONE SHOP COAT OF NO. 1 D PAINT AND TWO FIELD COATS OF NO. 10 PAINT AS PER SECT. 790.
6. CONCRETE SHALL BE CLASS A PER SECTION 725.

CURB	A
4"	3'-3"
6"	1'-9"
7"	1'-0"

DIMENSIONS

T=6" IF V=4' OR LESS
T=8" IF V IS BETWEEN 4' AND 8'
T=10" IF V IS 8' OR MORE (IF V EXCEEDS 10' SPECIAL DESIGN IS REQUIRED)
V=3'-6" UNLESS OTHERWISE SPECIFIED.

* SEE DETAILS 536-1 AND 536-2 FOR DETAILS AND SECTIONS COMMON TO ALL CURB OPENING CATCH BASINS.
** 4' LOCATIONS WHERE 4' S/W IS REQUIRED.

DETAIL NO.				REVISED	DETAIL NO.
530	MARICOPA ASSOCIATION of GOVERNMENTS	STANDARD DETAIL ENGLISH	3'-6" CURB OPENING CATCH BASIN - TYPE 'A'	01-01-1998	530

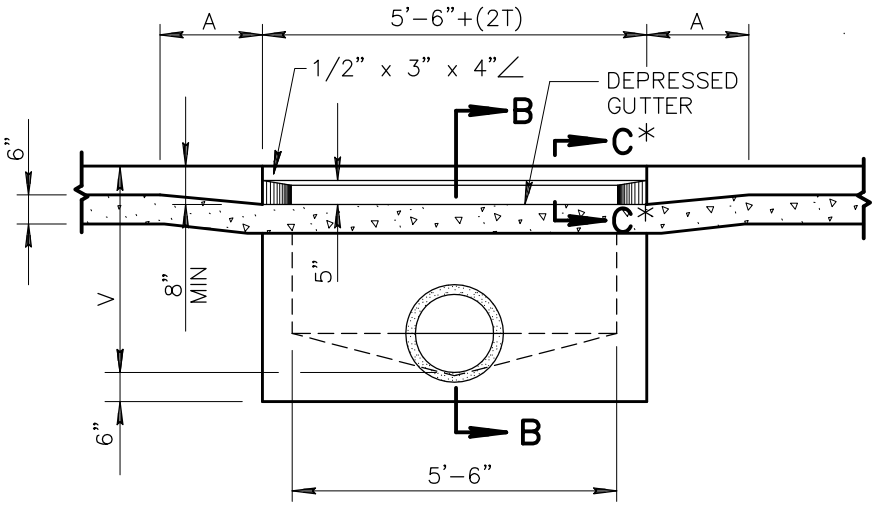

SECTION A–A

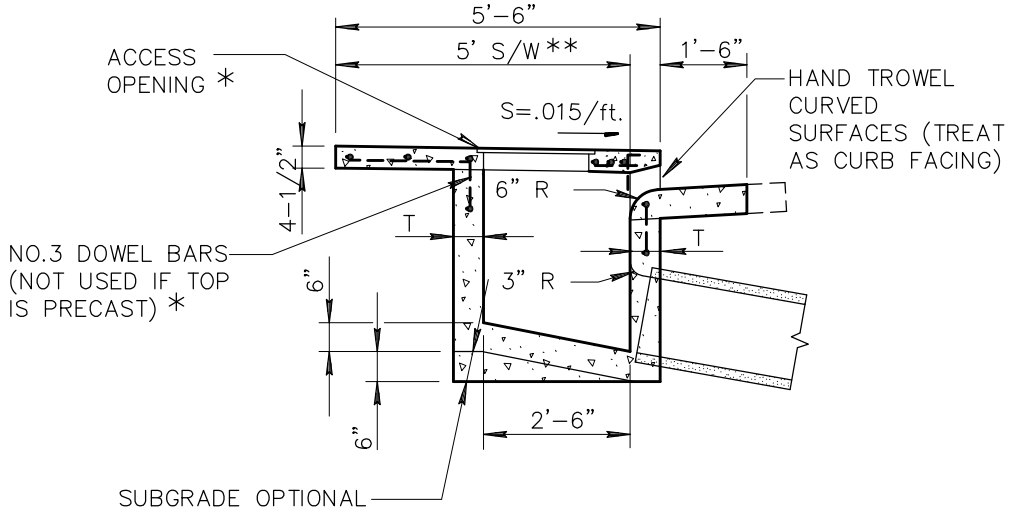

SECTION B–B

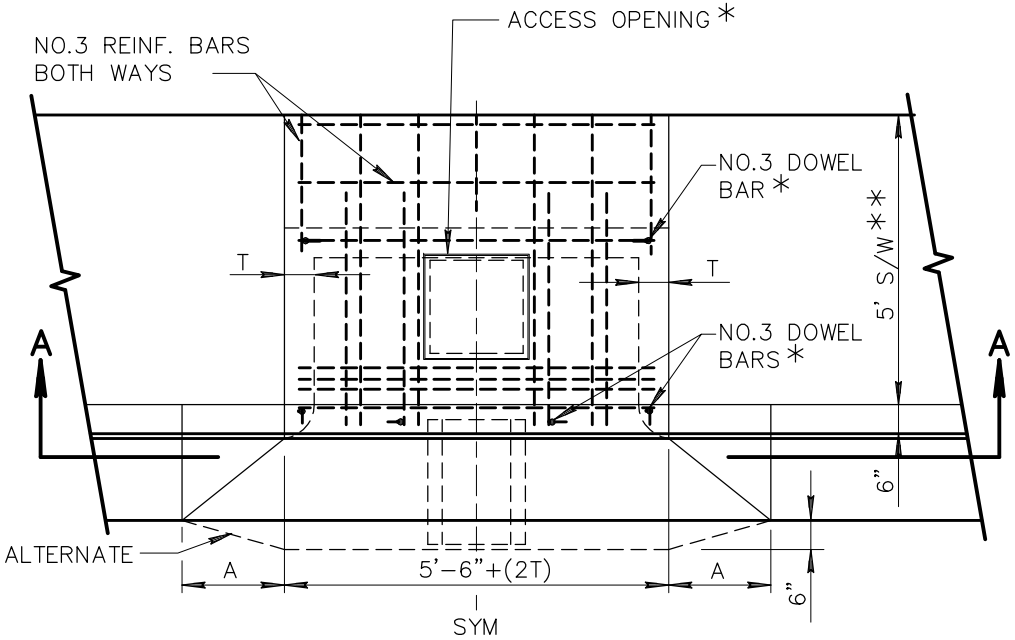

PLAN VIEW

NOTES:

1. THE ENTIRE CATCH BASIN COVER MAY BE POURED IN PLACE OR PRECAST.
2. CONNECTION PIPES MAY BE PLACED IN ANY POSITION AROUND THE WALLS PROVIDED THE POSITION IS CONSISTENT WITH THE PLAN.
3. OUTLET PIPE SHALL BE TRIMMED TO FINAL SHAPE AND LENGTH BEFORE CONCRETE IS POURED.
4. FLOOR OF BASIN SHALL BE TROWELLED TO A HARD SMOOTH SURFACE AND SHALL SLOPE FROM ALL DIRECTIONS TO OUTLET.
5. ALL STRUCTURAL STEEL TO BE PAINTED ONE SHOP COAT OF NO. 1 D PAINT AND TWO FIELD COATS OF NO. 10 PAINT AS PER SECT. 790.
6. CONCRETE SHALL BE CLASS A PER SECTION 725.

CURB	A
4"	3'-3"
6"	1'-9"
7"	1'-0"

DIMENSIONS

T=6" IF V=4' OR LESS
T=8" IF V IS BETWEEN 4' AND 8'
T=10" IF V IS 8' OR MORE (IF V EXCEEDS 10' SPECIAL DESIGN IS REQUIRED)
V=3'-6" UNLESS OTHERWISE SPECIFIED.

* SEE DETAILS 536-1 AND 536-2 FOR DETAILS AND SECTIONS COMMON TO ALL CURB OPENING CATCH BASINS.
** 4' LOCATIONS WHERE 4' S/W IS REQUIRED.

DETAIL NO.				REVISED	DETAIL NO.
531	MARICOPA ASSOCIATION of GOVERNMENTS	STANDARD DETAIL ENGLISH	5'-6" CURB OPENING CATCH BASIN – TYPE 'B'	01-01-1998	531

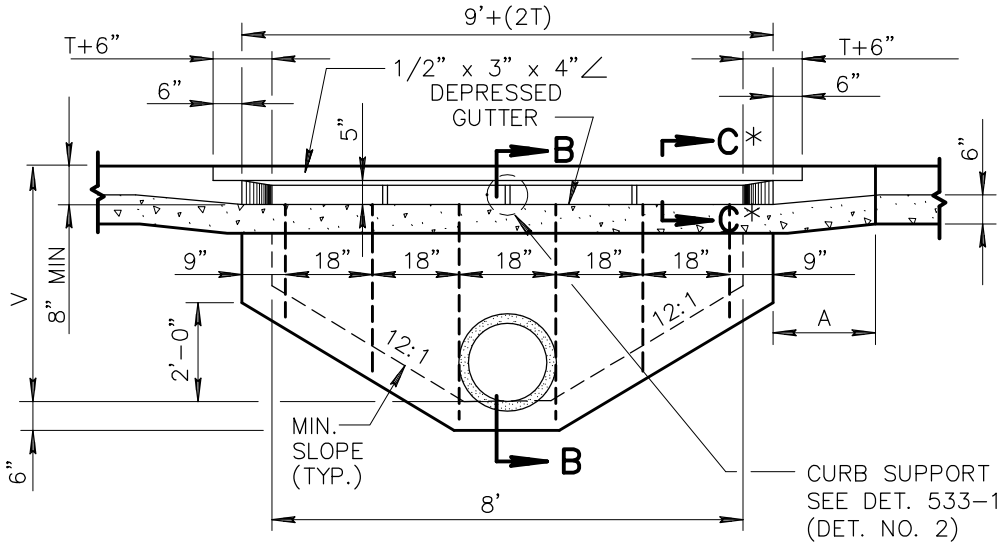

SECTION A–A

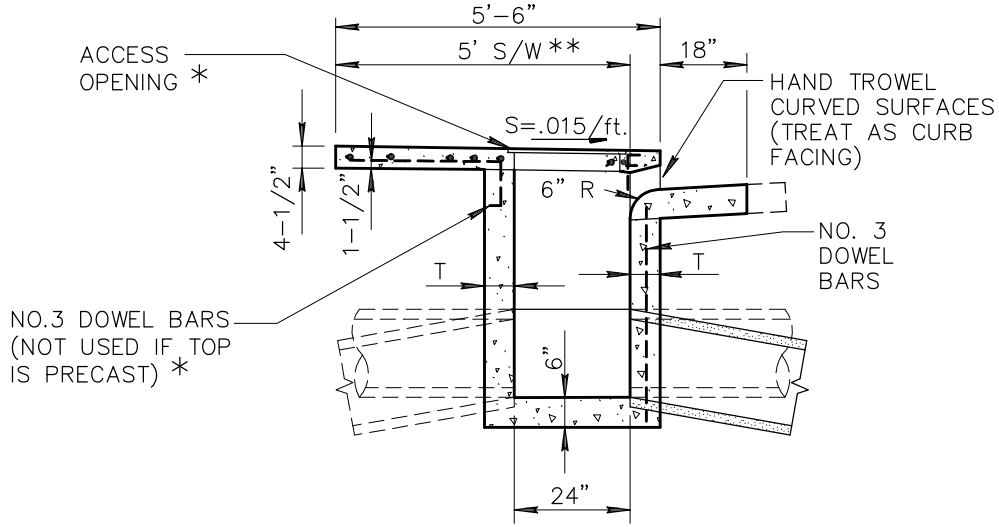

SECTION B–B

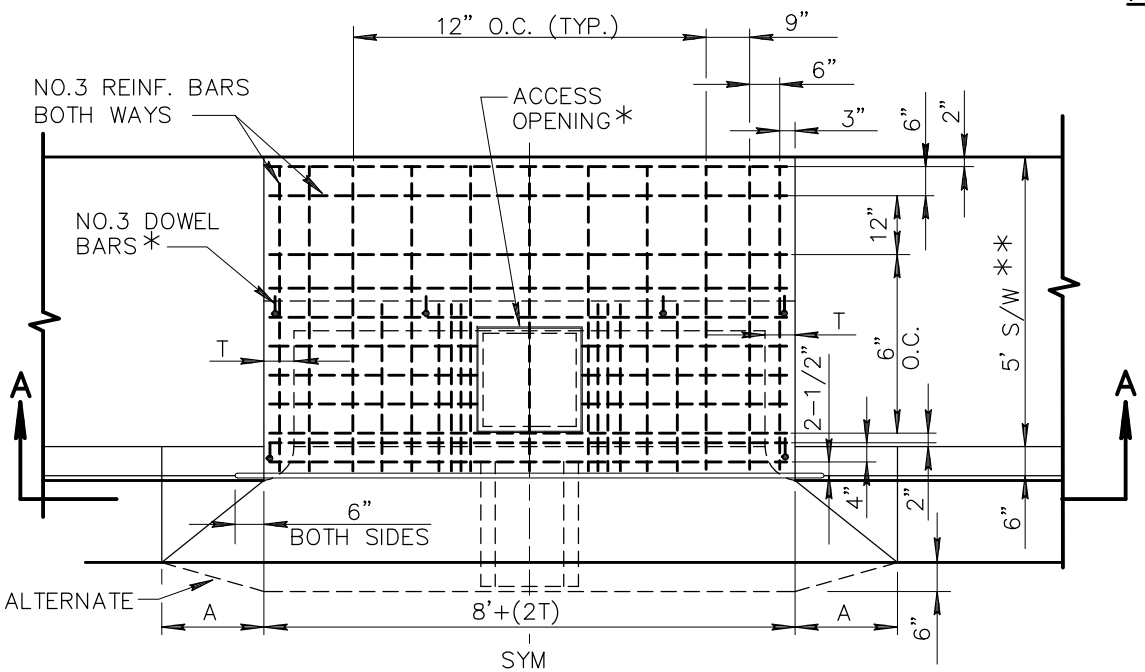

PLAN VIEW

NOTES:

1. THE ENTIRE CATCH BASIN COVER MAY BE POURED IN PLACE OR PRECAST.
2. CONNECTION PIPES MAY BE PLACED IN ANY POSITION AROUND THE WALLS PROVIDED THE POSITION IS CONSISTENT WITH THE PLAN.
3. OUTLET PIPE SHALL BE TRIMMED TO FINAL SHAPE AND LENGTH BEFORE CONCRETE IS POURED.
4. FLOOR OF BASIN SHALL BE TROWELLED TO A HARD SMOOTH SURFACE AND SHALL SLOPE FROM ALL DIRECTIONS TO OUTLET.
5. ALL STRUCTURAL STEEL TO BE PAINTED ONE SHOP COAT OF NO.1 D PAINT AND TWO FIELD COATS OF NO. 10 PAINT AS PER SECT. 790.
6. CONCRETE SHALL BE CLASS A PER SECTION 725.

CURB	A
4"	3'-3"
6"	1'-9"
7"	1'-0"

DIMENSIONS

T=6" IF V=4' OR LESS
T=8" IF V IS BETWEEN 4' AND 8'
T=10" IF V IS 8' OR MORE (IF V EXCEEDS 10' SPECIAL DESIGN IS REQUIRED)
V=4' UNLESS OTHERWISE SPECIFIED.

* SEE DETAILS 536-1 AND 536-2 FOR DETAILS AND SECTIONS COMMON TO ALL CURB OPENING CATCH BASINS.
** 4' LOCATIONS WHERE 4' S/W IS REQUIRED.

DETAIL NO.				REVISED	DETAIL NO.
532	MARICOPA ASSOCIATION of GOVERNMENTS	STANDARD DETAIL ENGLISH	8'-0" CURB OPENING CATCH BASIN – TYPE 'C'	01-01-1998	532

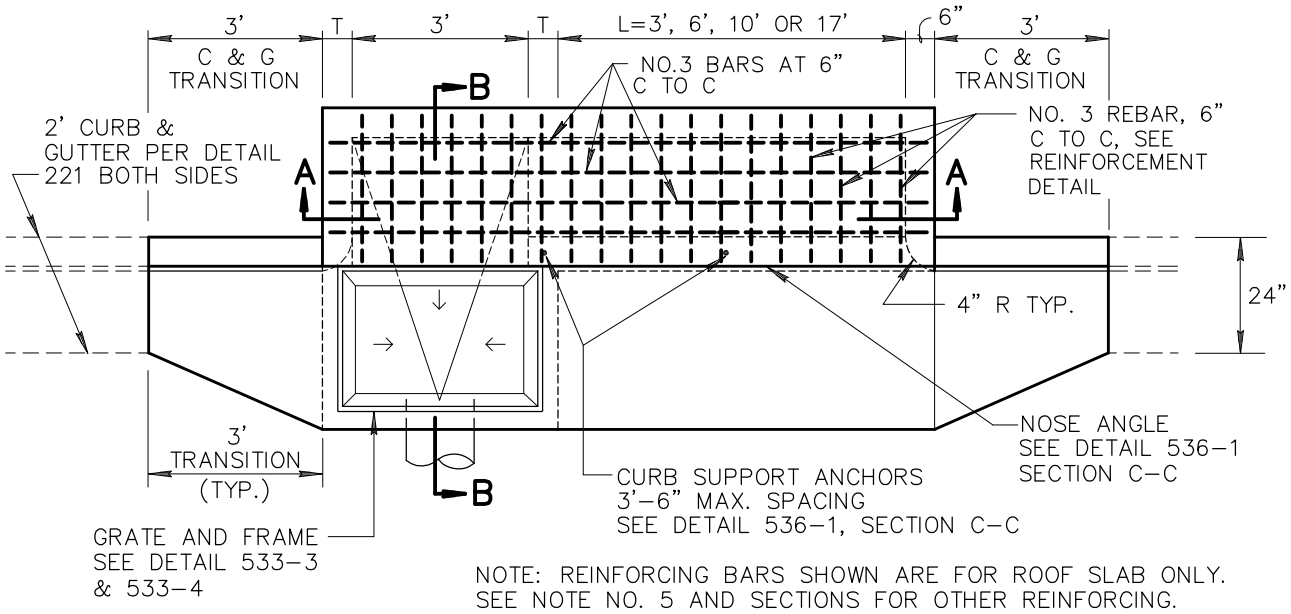

NOTE: REINFORCING BARS SHOWN ARE FOR ROOF SLAB ONLY. SEE NOTE NO. 5 AND SECTIONS FOR OTHER REINFORCING.

PLAN VIEW

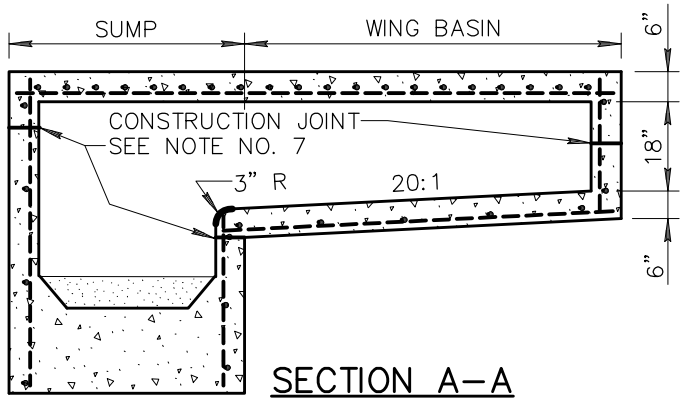

SECTION A–A

NOTES:

1. SINGLE C.B. (ILLUSTRATED), SUMP WITH WING BASIN UPSTREAM.
2. DOUBLE C.B. SUMP WITH SYMMETRICAL WING BASINS EACH SIDE.
3. PIPES CAN BE PLACED IN ANY WALL EXCEPT WALL ADJACENT TO A WING BASIN. PIPE SHALL BE TRIMMED TO FINAL SHAPE AND LENGTH BEFORE CONCRETE IS PLACED.
4. SUMP FLOOR SHALL HAVE A WOOD TROWEL FINISH AND A MIN. SLOPE OF 4:1 IN ALL DIRECTIONS TOWARD OUTLET PIPE.
5. ALL REFORCING BARS SHALL BE NO.4 18" C TO C BOTH WAYS AND 1-1/2" CLEAR TO INSIDE OF WALLS AND OUTSIDE WING BASIN FLOOR EXCEPT AS SHOWN. SEE SECT. 727.
6. ALL CONCRETE SHALL BE CLASS 'A', PER SECT. 725.
7. CONSTRUCTION JOINTS SHALL BE PLACED TO MEET FIELD CONDITIONS.
8. ALL EXPOSED STEEL SHALL BE GALVANIZED OR PAINTED WITH ONE SHOP COAT OF #1 PAINT AND TWO FIELD COATS OF #10 PAINT.

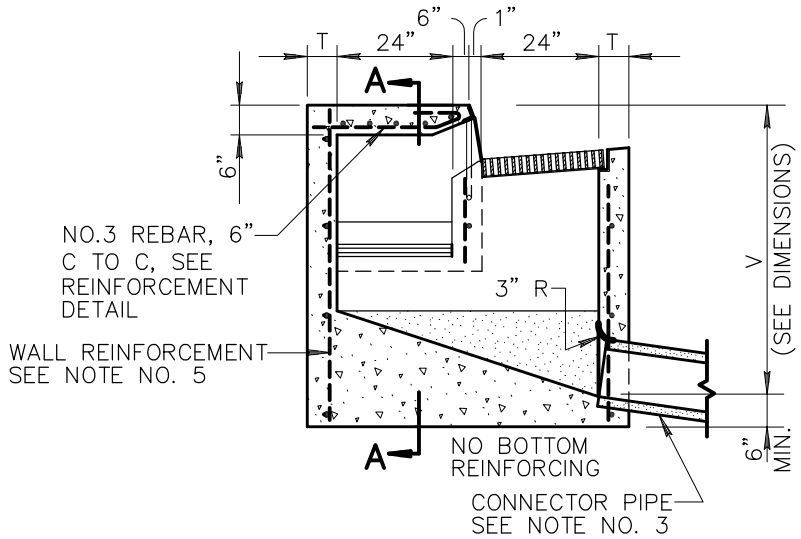

SECTION B–B

DIMENSIONS

V = 3'-3" MIN. WHEN L = 3'
V = 3'-5" MIN. WHEN L = 6'
V = 3'-7" MIN. WHEN L = 10'
V = 4'-0" MIN. WHEN L = 17'
T = 6" WHEN V IS LESS THAN 8'
T = 8" WHEN V IS EQUAL TO OR GREATER THAN 8'
H = CURB HEIGHT PRIOR TO THE TRANSITION

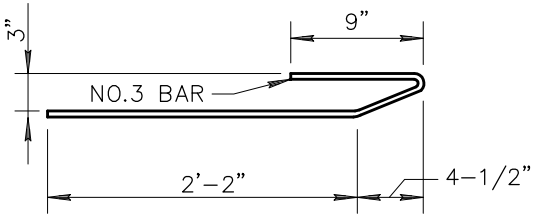

REINFORCEMENT DETAIL

DETAIL NO.		STANDARD DETAIL		REVISED	DETAIL NO.
533-1	MARICOPA ASSOCIATION of GOVERNMENTS	ENGLISH	CATCH BASIN TYPE 'D	01-01-1998	533-1

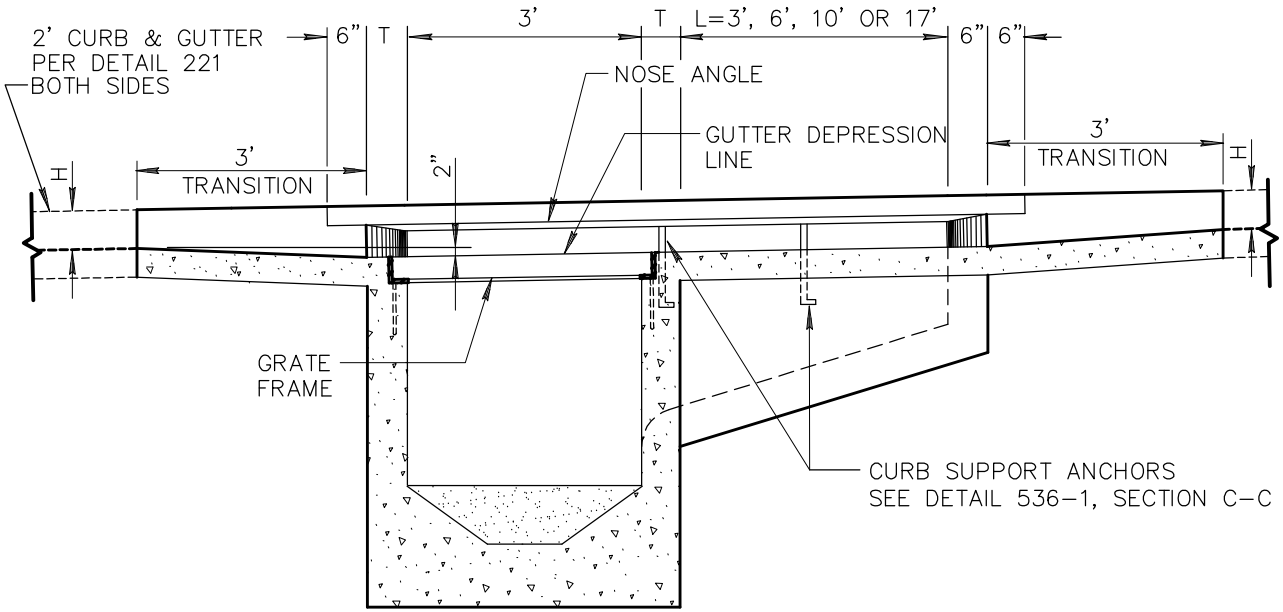

SECTION D-D

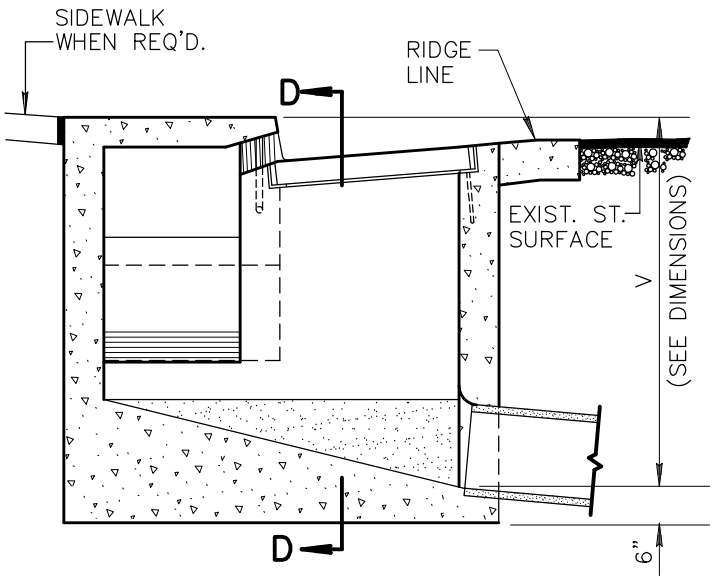

SECTION E-E

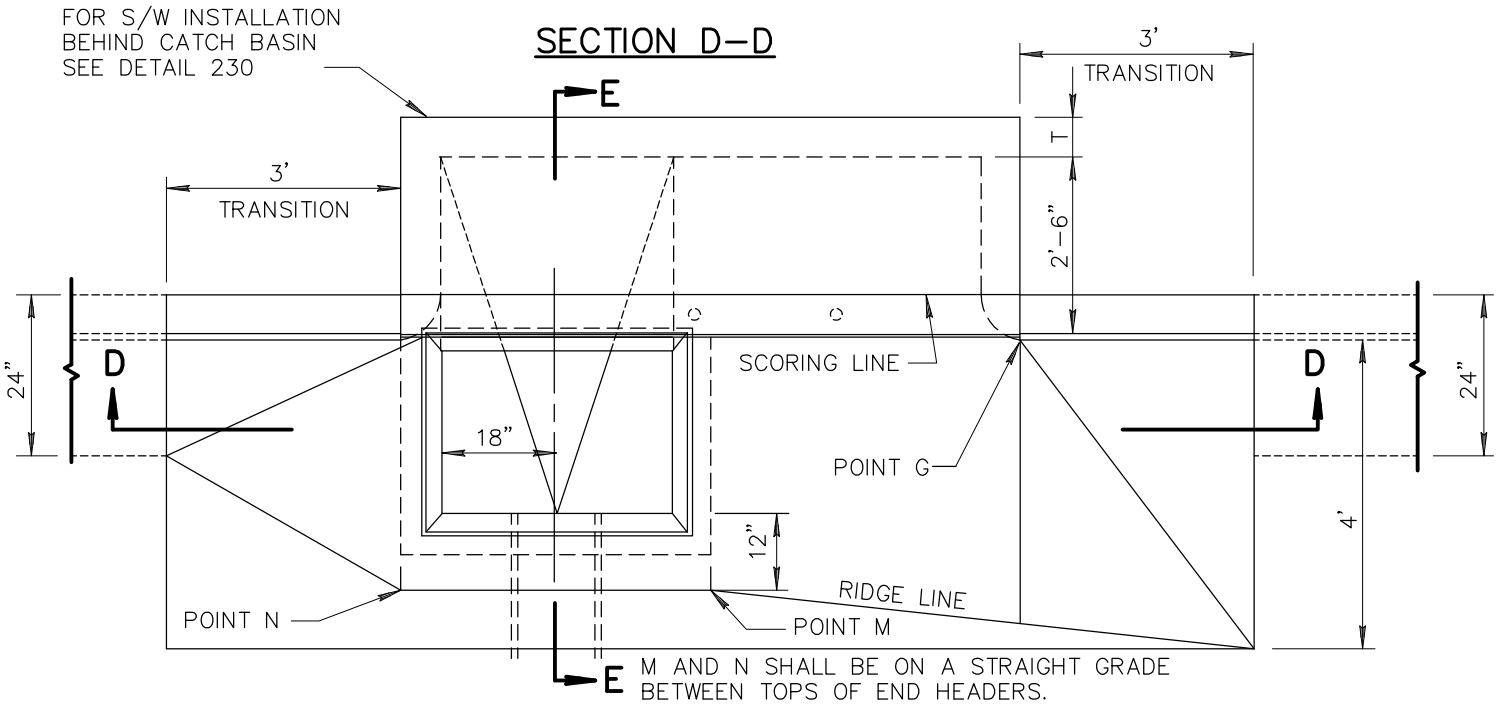

PLAN VIEW

APRON NOTES:

9. APRON IS CONSTRUCTED ONLY WHEN SPECIFIED ON PLANS.
10. CONCRETE IN APRON SHALL BE NOT LESS THAN 8" THICK.
11. CURB FACES AT CATCH BASIN OPENING AND POINT G SHALL BE THAT OF THE EXISTING CURB FACE PLUS 2' OR AS OTHERWISE SHOWN.
12. ELEVATION AT THE OUTER CORNERS OF THE LOCAL DEPRESSION SHOWN ON THE PLANS ARE FOR THE FINISHED SURFACE.
13. SEE DETAIL 533-1 FOR ADDITIONAL DIMENSIONS, REBAR PLACEMENT AND OTHER INFORMATION TO CONSTRUCT CATCH BASIN.

DETAIL NO.				REVISED	DETAIL NO.
533-2	MARICOPA ASSOCIATION of GOVERNMENTS	STANDARD DETAIL ENGLISH	APRON FOR TYPE 'D' CATCH BASIN	01-01-1999	533-2

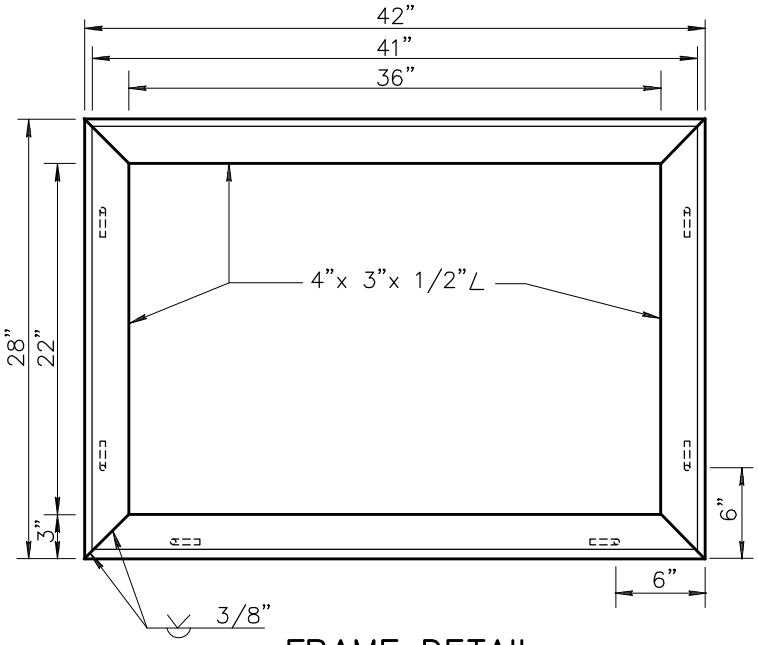

FRAME DETAIL

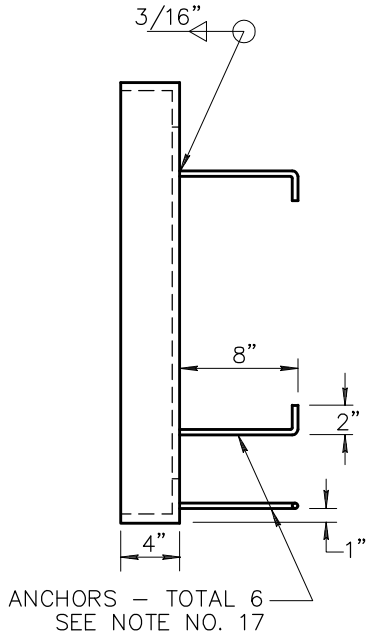

FRAME AND GRATE NOTES

14. FRAME AND GRATING SHALL BE TESTED FOR ACCURACY OF FIT AND SHALL BE MARKED IN SETS BEFORE DELIVERY.
15. ALL WELDING SHALL BE IN ACCORDANCE WITH STANDARD WELDING SPECIFICATIONS.
16. CROSS BARS AND END BARS MAY BE FILLET WELDED, RESISTANCE WELDED OR ELECTOR FORGED TO BEARING BARS.
17. ANCHORS SHALL BE 3/8" DIA. STEEL ROD, NO. 3 REBAR, 3/8" DIA. x 8" BOLTS OR 8" NELSON STUDS.
18. ALL PARTS SHALL BE OF STRUCTURAL GRADE STEEL.
19. ALL EXPOSED STEEL SHALL BE GALVANIZED OR PAINTED WITH ONE COAT #1 PAINT AND TWO FIELD COATS OF #10 PAINT.

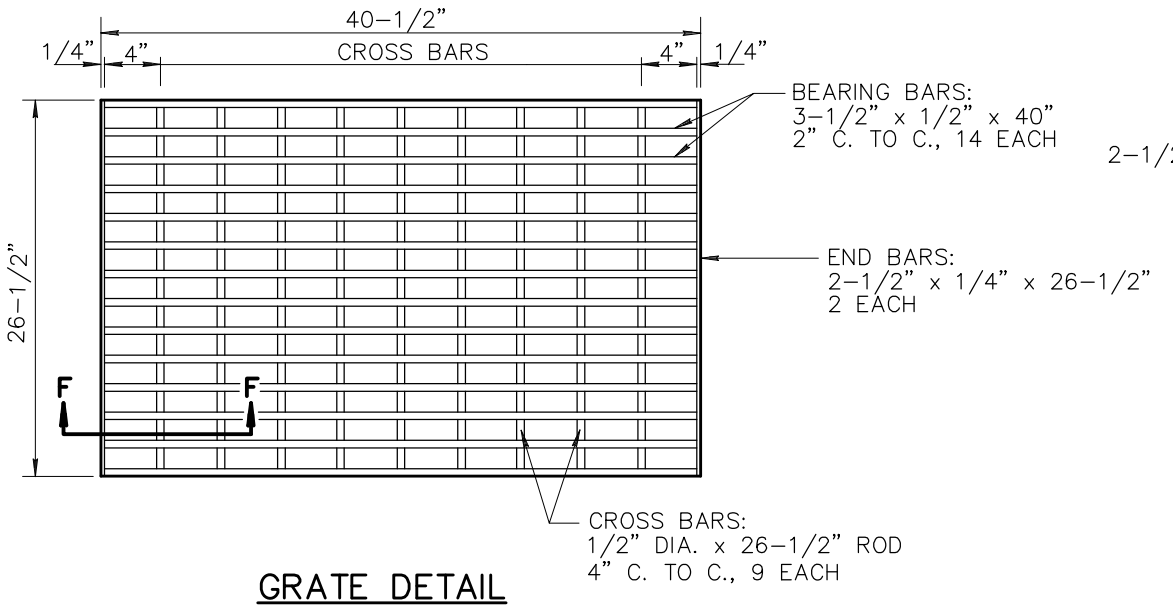

GRATE DETAIL

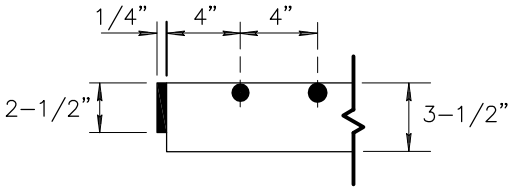

SECTION F–F

DETAIL NO.		STANDARD DETAIL		REVISED	DETAIL NO.
533–3	MARICOPA ASSOCIATION of GOVERNMENTS	ENGLISH	FRAME AND GRATE FOR TYPE 'D' CATCH BASIN	01–01–2007	533–3

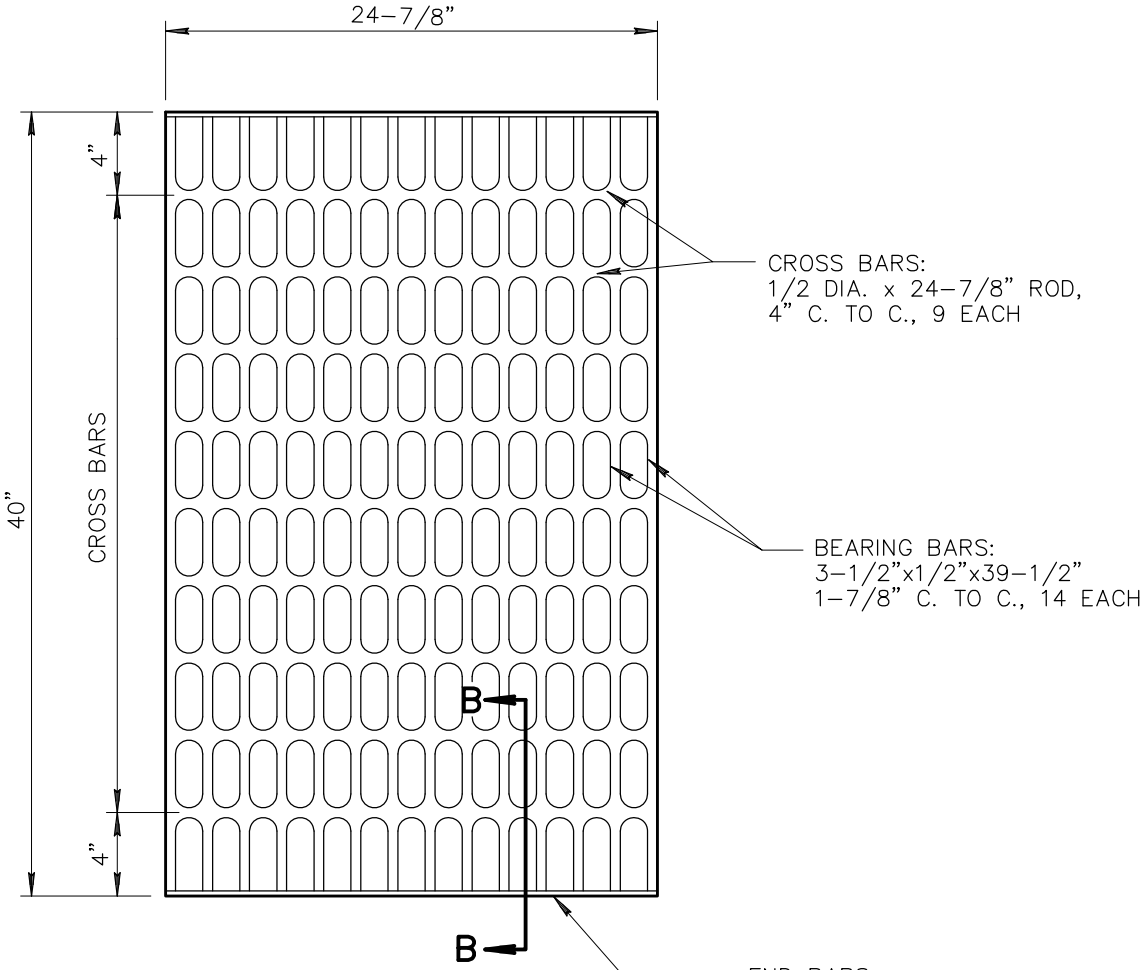

GRATE DETAIL

GRATE OPENING: 4.344 SQ. FT.

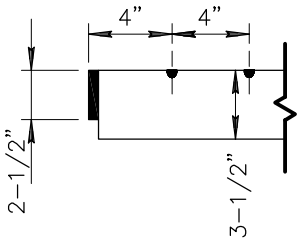

SECTION B-B

DETAIL NO.				REVISED	DETAIL NO.
533-4	MARICOPA ASSOCIATION of GOVERNMENTS	STANDARD DETAIL ENGLISH	7'-0" CURB OPENING CATCH BASIN TYPE 'D' - GRATE DETAILS	01-01-2007	533-4

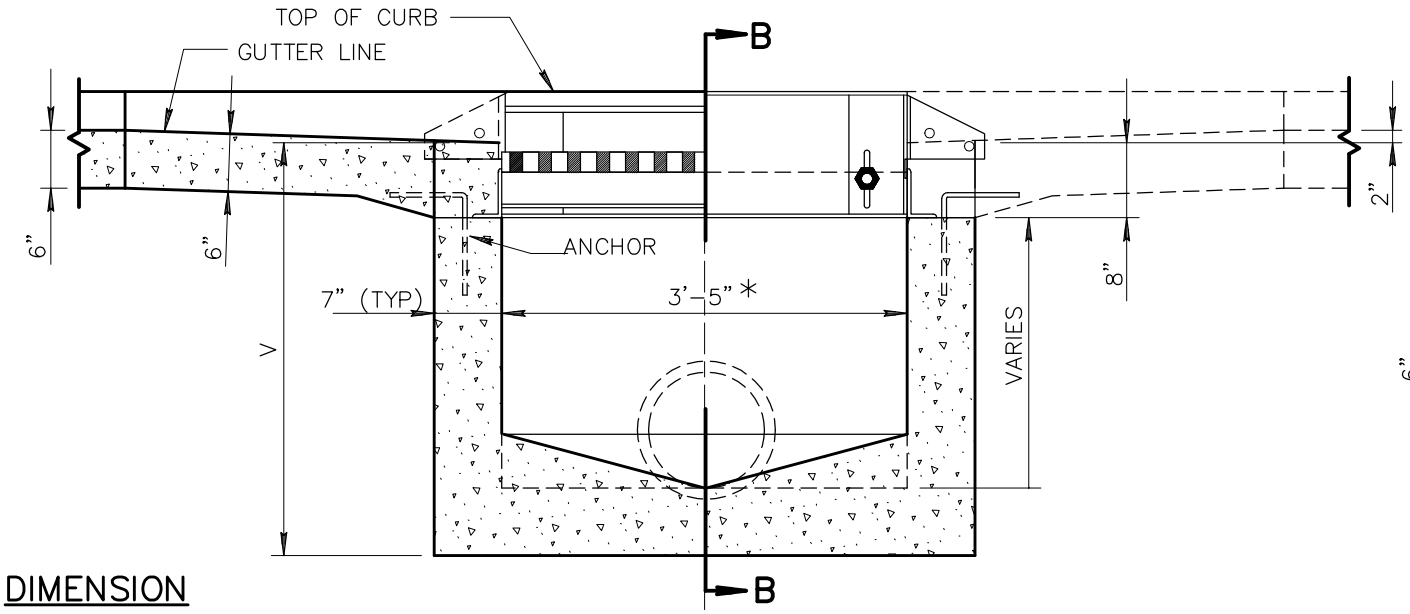

SECTION A–A

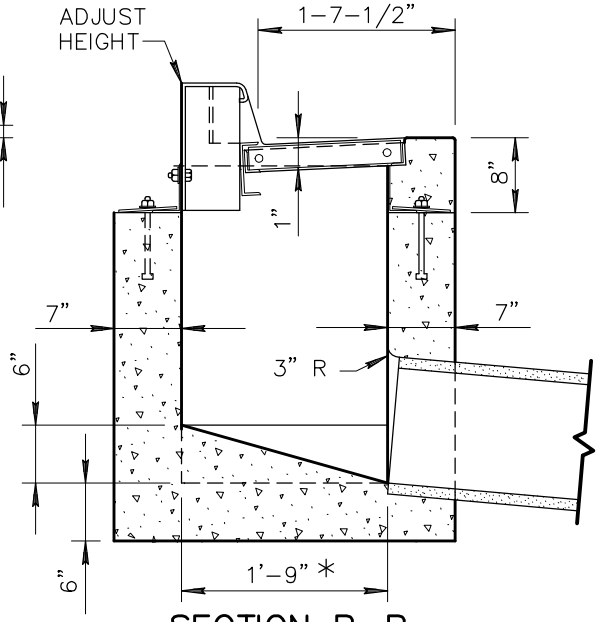

SECTION B–B

DIMENSION

V=3'-0" UNLESS OTHERWISE SPECIFIED.
* DIMENSIONAL CHANGE WITH DETAIL 534-3 AND DETAIL 534-4.

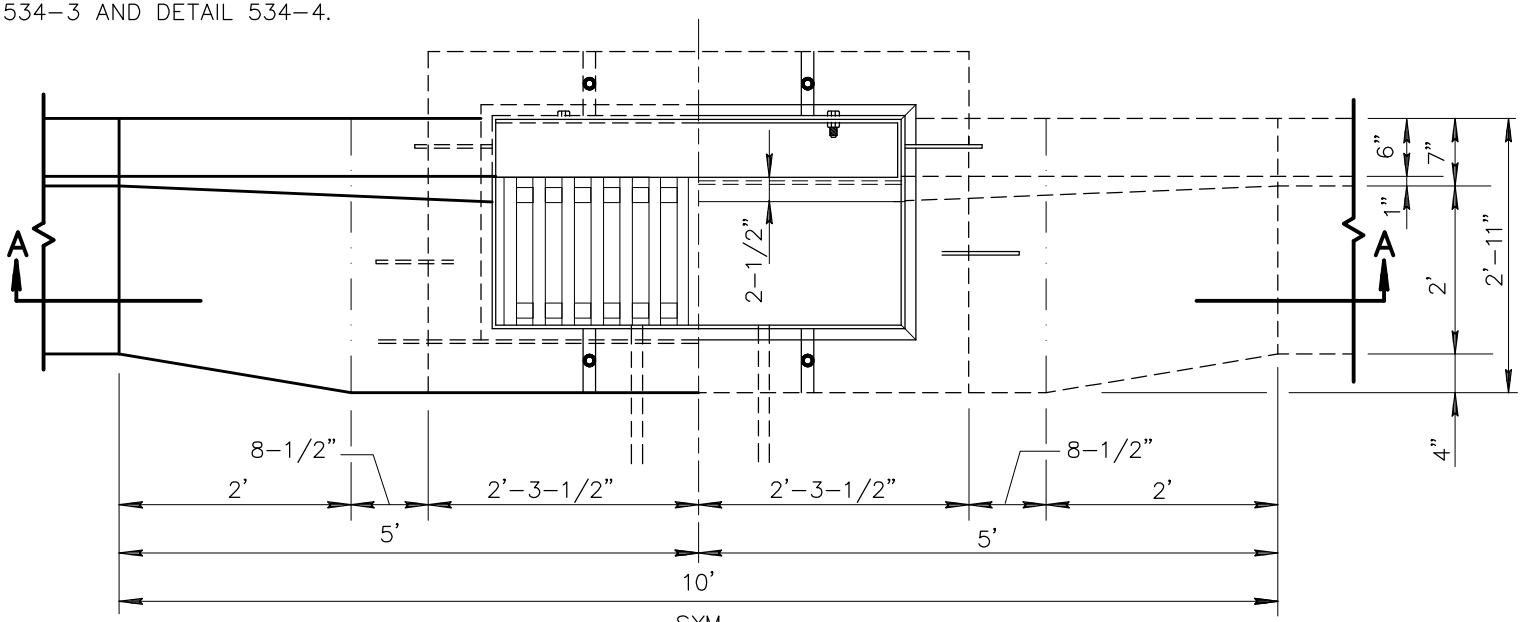

HALF PLAN GUTTER & GRATE

HALF PLAN FRAME & ANCHORS

NOTES:

1. ADJUSTABLE CURB, FRAME AND GRATING UNITS SHALL BE STRUCTURAL STEEL OR CAST IRON
2. PIPES MAY ENTER OR LEAVE ANY WALL. BOTTOM OF BOX TO BE SLOPED TO OUTLET PIPE FROM ALL DIRECTIONS AND TROWELLED TO A HARD SMOOTH SURFACE.
3. CONNECTION PIPES MAY BE PLACED IN ANY POSITION AROUND THE WALLS PROVIDED THE POSITION IS CONSISTENT WITH THE PLAN.
4. OUTLET PIPE SHALL BE TRIMMED TO FINAL SHAPE AND LENGTH BEFORE CONCRETE IS POURED.
5. ALL STRUCTURAL STEEL TO BE PAINTED ONE SHOP COAT OF NO. 1 PAINT AND TWO FIELD COATS OF NO. 10 PAINT AS PER SECT. 790.
6. ALL CONCRETE, CLASS 'A' AS PER SECTION 725.

DETAIL NO.				REVISED	DETAIL NO.
534–1	MARICOPA ASSOCIATION of GOVERNMENTS	STANDARD DETAIL ENGLISH	CATCH BASIN TYPE 'E'	01–01–1998	534–1

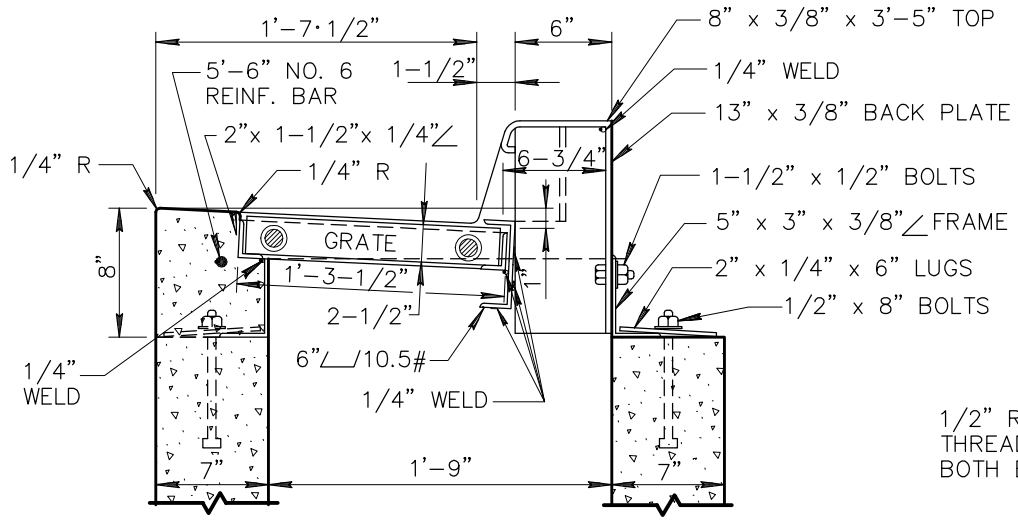

CROSS SECTION

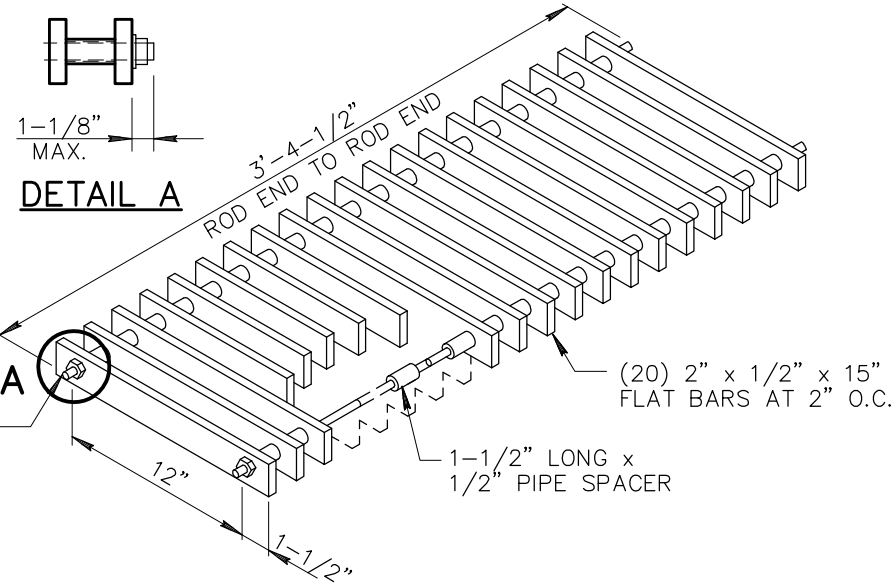

DETAIL A

GRATE

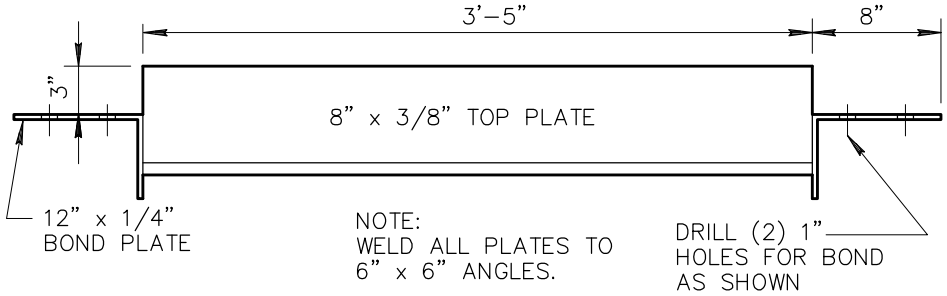

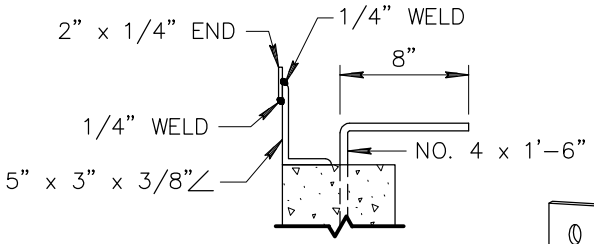

ANCHOR

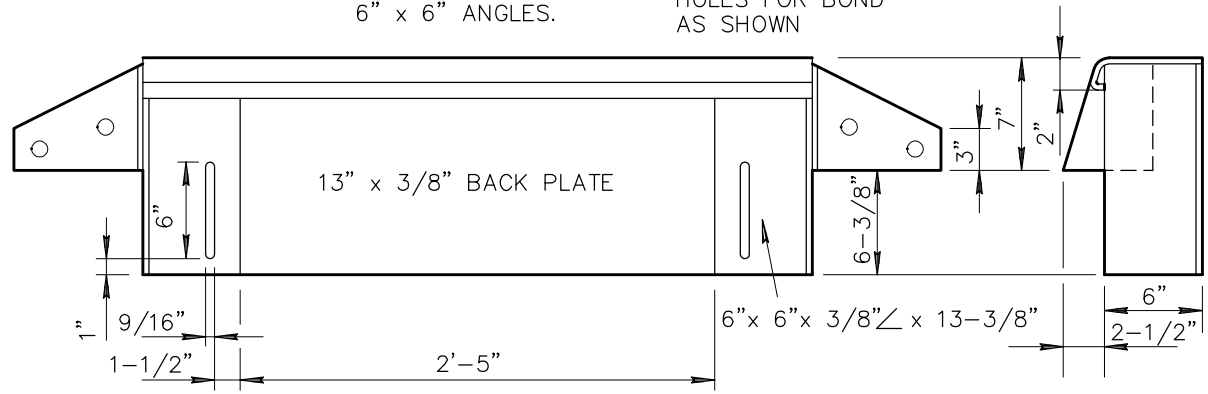

ADJUSTABLE CURB

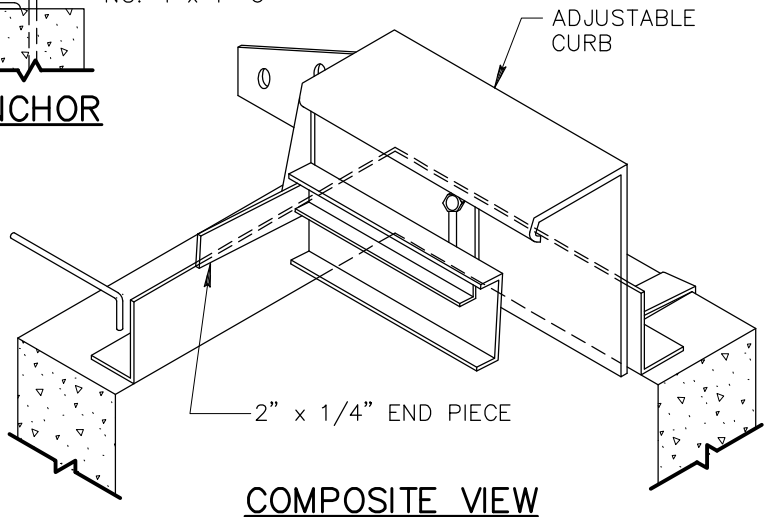

COMPOSITE VIEW

DETAIL NO.				REVISED	DETAIL NO.
534-2	MARICOPA ASSOCIATION of GOVERNMENTS	STANDARD DETAIL ENGLISH	CATCH BASIN TYPE 'E' (DETAILS)	01-01-1998	534-2

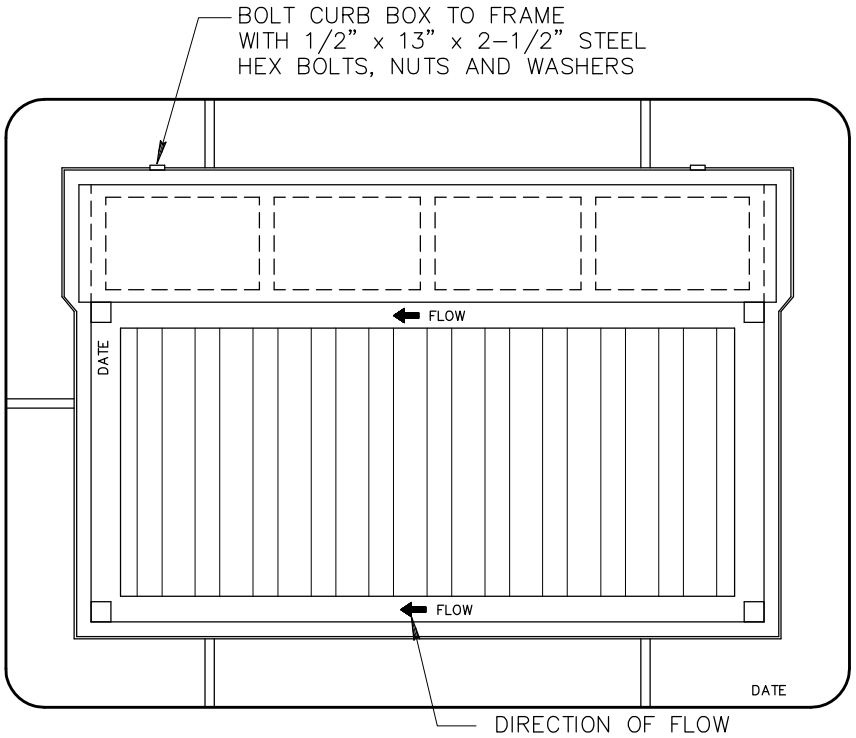

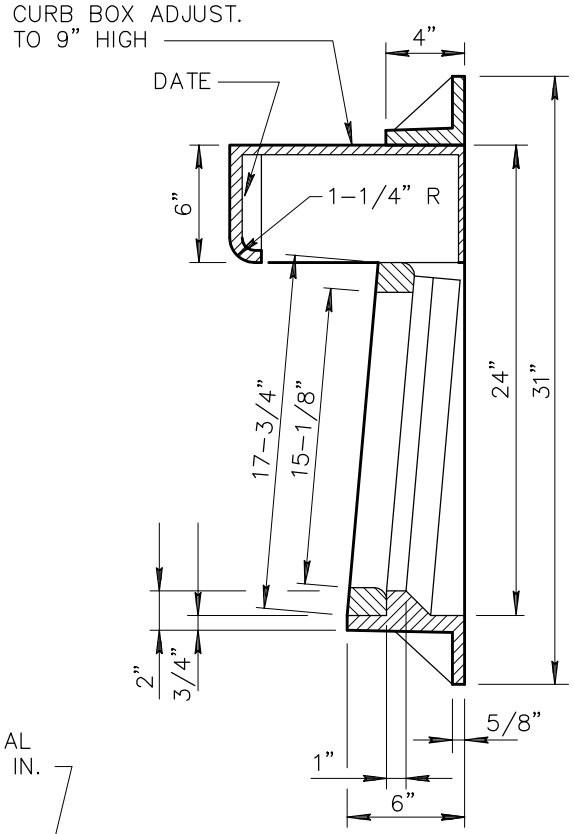

SECTION B-B

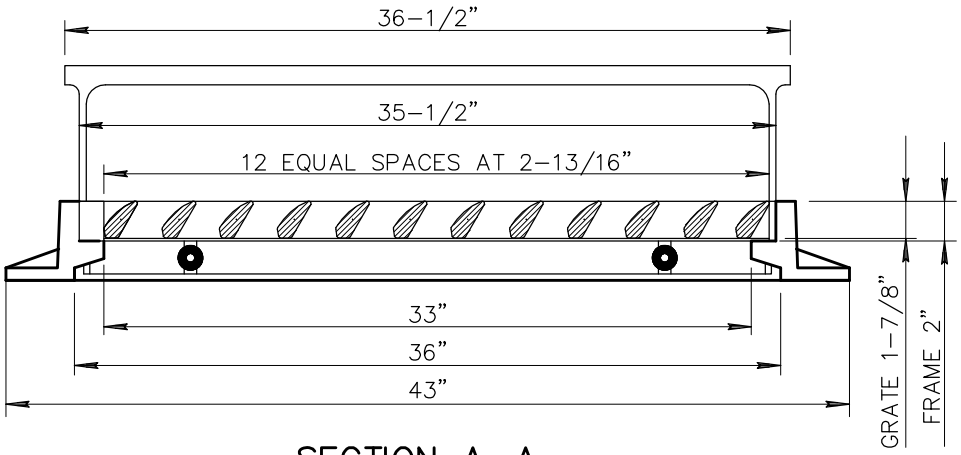

SECTION A-A

CAST IRON FRAME - GRATE - CURB BOX

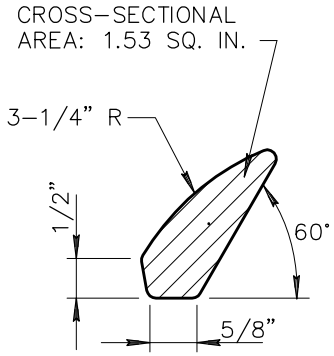

VANE DETAIL

NOTE:

DIMENSIONAL CHANGE REQUIRED FROM 3'-5"
WIDTH TO 3'-0" AND 1'-9" DEPTH TO 2'-0"
MATERIAL CAST GRAY IRON ASTM A-48-83 CLASS 35B.
FRAME WEIGHT 209 LBS; GRATE 140 LBS; CURB BOX 92 LBS.

DETAIL NO.		STANDARD DETAIL		REVISED	DETAIL NO.
534-3	MARICOPA ASSOCIATION of GOVERNMENTS	ENGLISH	CATCH BASIN TYPE 'E' (DETAILS)	01-01-1998	534-3

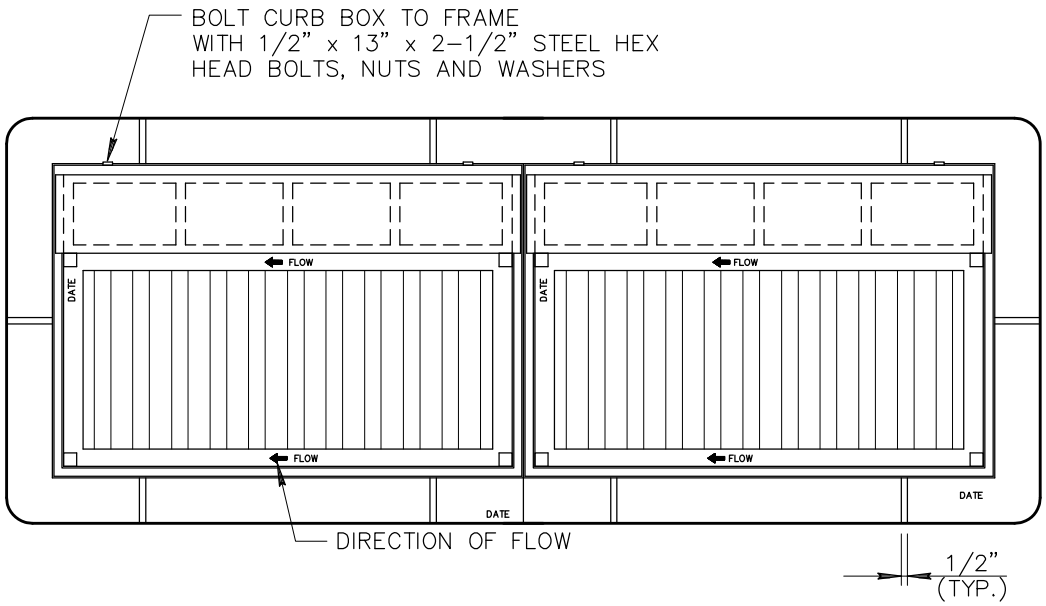

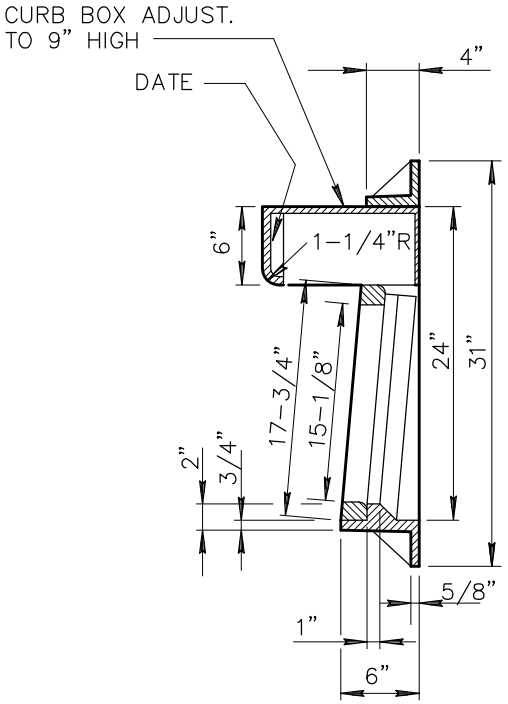

SECTION B-B

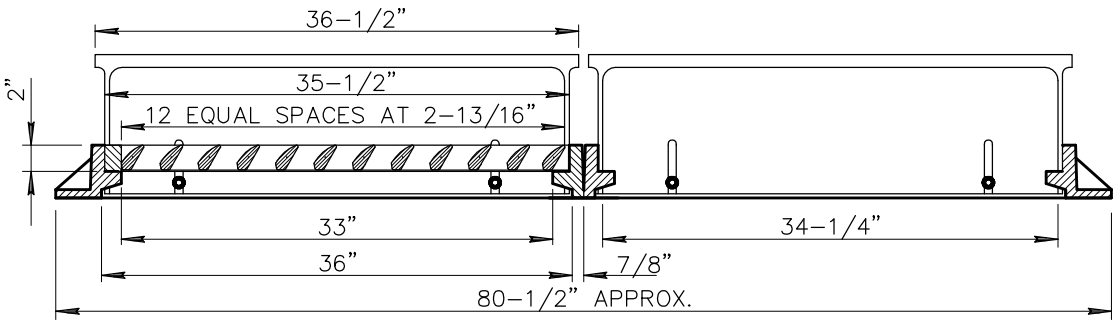

SECTION A-A

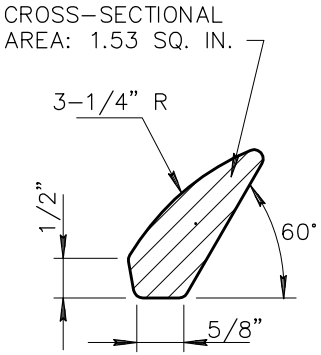

VANE DETAIL

DOUBLE UNIT CAST IRON FRAME - GRATE - CURB BOX

NOTE:

DIMENSIONAL CHANGE REQUIRED FROM 3'-5" WIDTH TO 6'-2", AND 1'-9" DEPTH TO 2'-0"
REQUIRES ONE CENTER STEEL I-BEAM 4" x 7.7 LBS.
MATERIAL CAST GRAY IRON ASTM A-48-83 CLASS 35B.
FRAME WEIGHT 197 LBS.; GRATE 140 LBS.; CURB BOX 92 LBS.

DETAIL NO.				REVISED	DETAIL NO.
534-4	MARICOPA ASSOCIATION of GOVERNMENTS	STANDARD DETAIL ENGLISH	CATCH BASIN TYPE 'E' (DETAILS)	01-01-1998	534-4

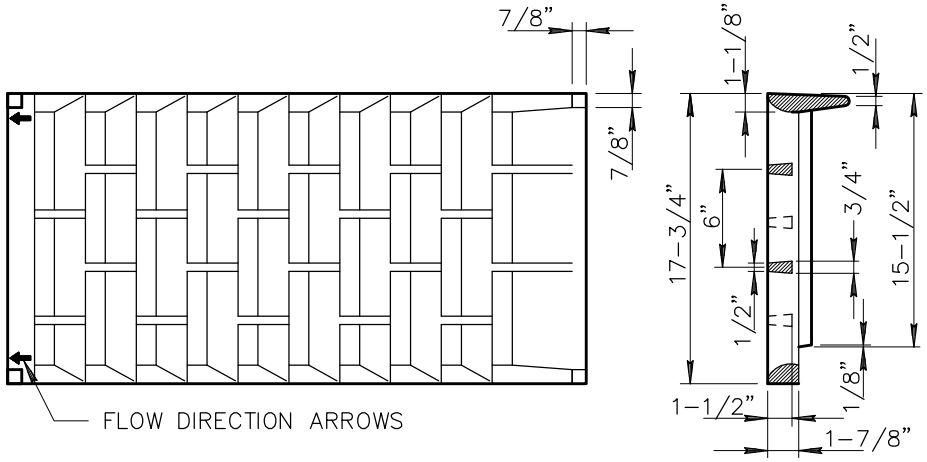

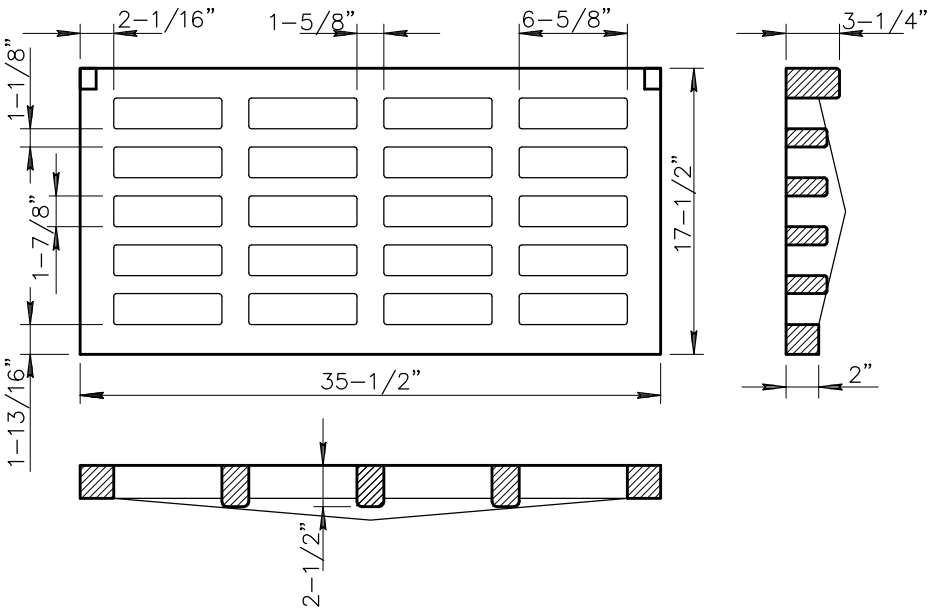

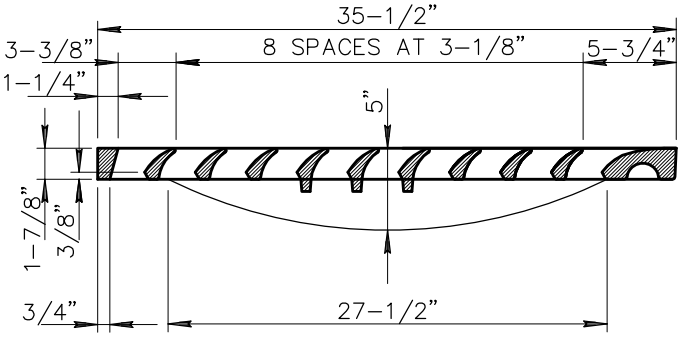

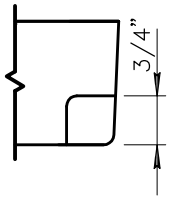

NOTCH DETAIL

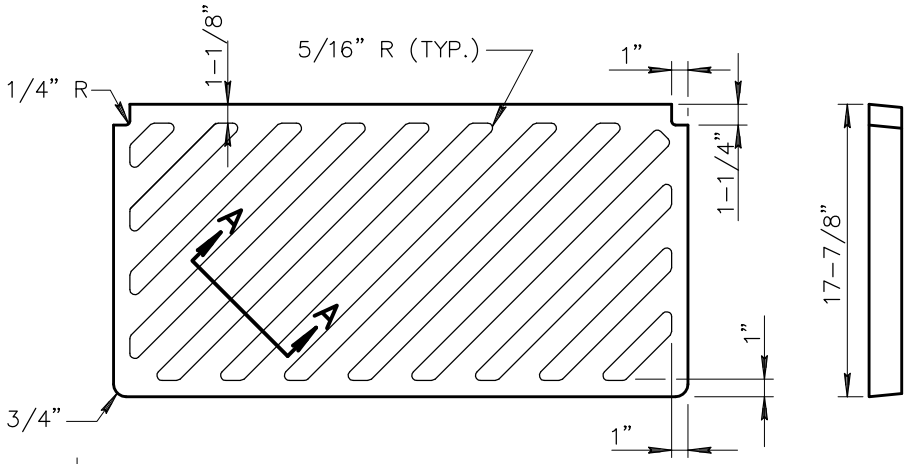

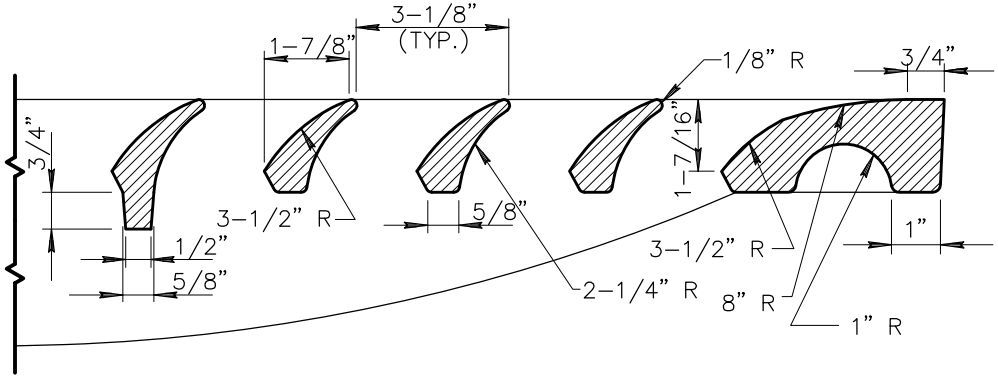

VANE DETAIL

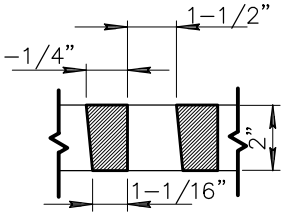

SECTION A-A

DETAIL NO.				REVISED	DETAIL NO.
534-5	MARICOPA ASSOCIATION of GOVERNMENTS	STANDARD DETAIL ENGLISH	ALTERNATE GRATE STYLES SUMP LOCATION	01-01-1998	534-5

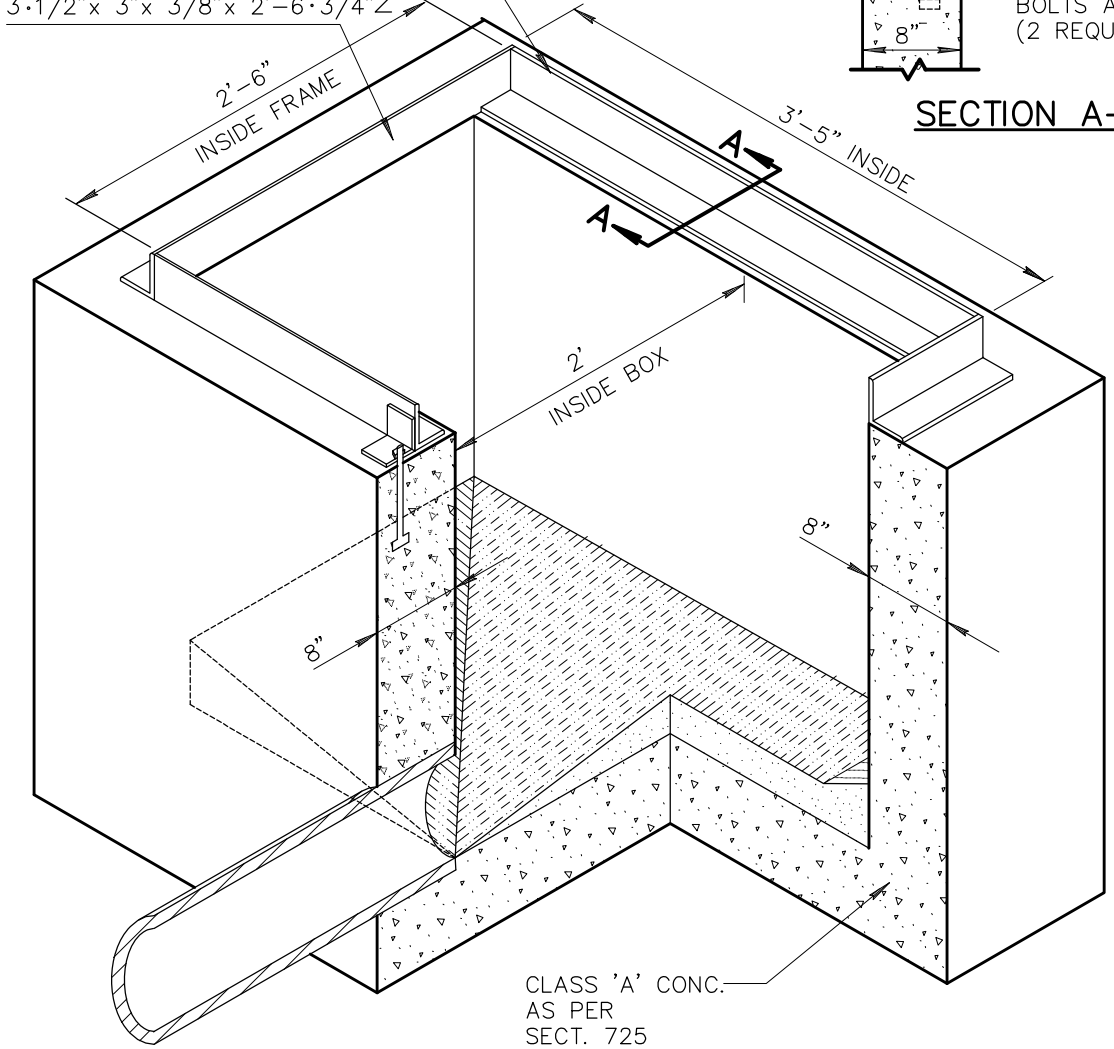

NOTE:
SEE DETAIL 534-1 FOR THICKNESS AND SLOPE DIMENSIONS OF BOTTOM.

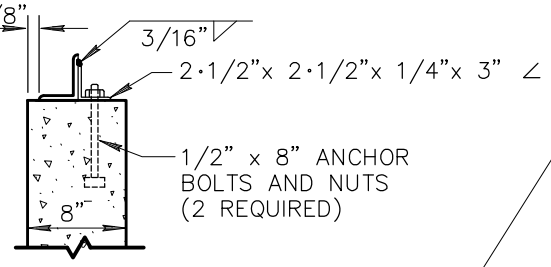

SECTION A-A

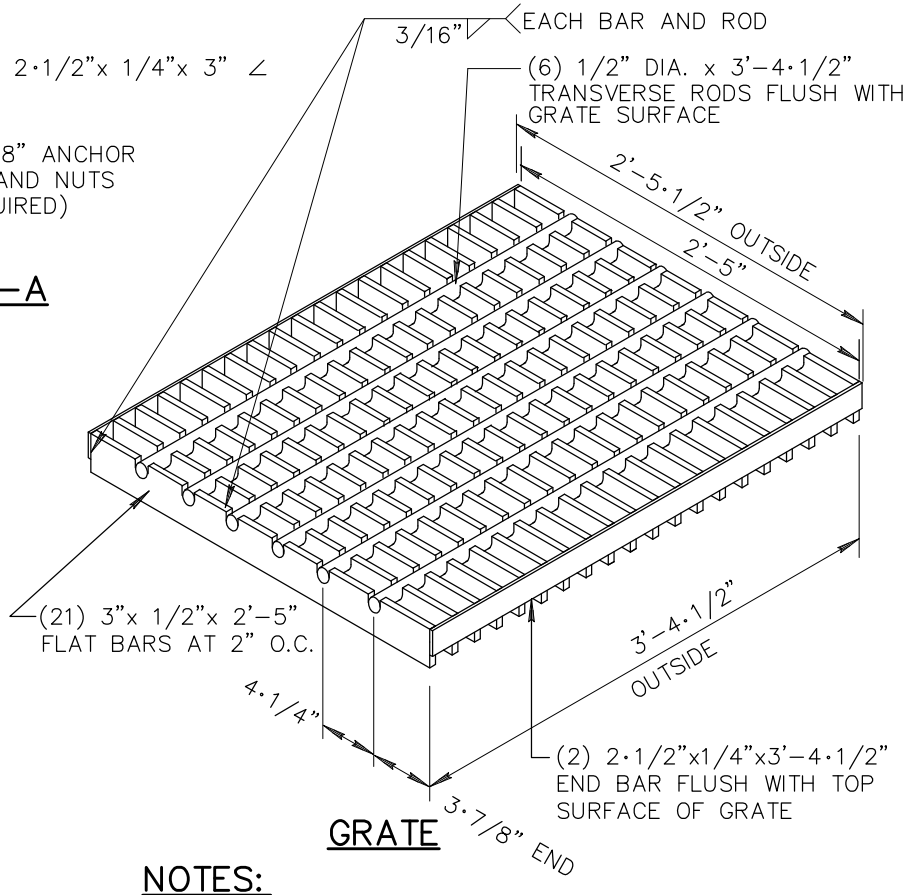

GRATE

NOTES:

1. PIPES MAY ENTER OR LEAVE ANY WALL. BOTTOM OF BOX TO BE SLOPED TO OUTLET PIPE FROM ALL DIRECTIONS AND TROWELLED TO A HARD SMOOTH SURFACE.
2. CONNECTION PIPES MAY BE PLACED IN ANY POSITION AROUND THE WALLS PROVIDED THE POSITION IS CONSISTENT WITH THE PLAN.
3. OUTLET PIPE SHALL BE TRIMMED TO FINAL SHAPE AND LENGTH BEFORE CONCRETE IS POURED.
4. ALL STRUCTURAL STEEL TO BE PAINTED ONE SHOP COAT OF NO. 1 PAINT AND TWO FIELD COATS OF NO. 10 PAINT AS PER SECT. 790.
5. ALL WELDS ON FRAME AND SIDE BARS ON GRATE SHALL BE FULL LENGTH OF JOINT.
6. TOTAL COMBINED CLEARANCE BETWEEN FRAME AND GRATE IS 1/2".

DETAIL NO.				REVISED	DETAIL NO.
535	MARICOPA ASSOCIATION of GOVERNMENTS	STANDARD DETAIL ENGLISH	CATCH BASIN TYPE 'F' (FOR USE WITHOUT CURB)	01-01-2009	535

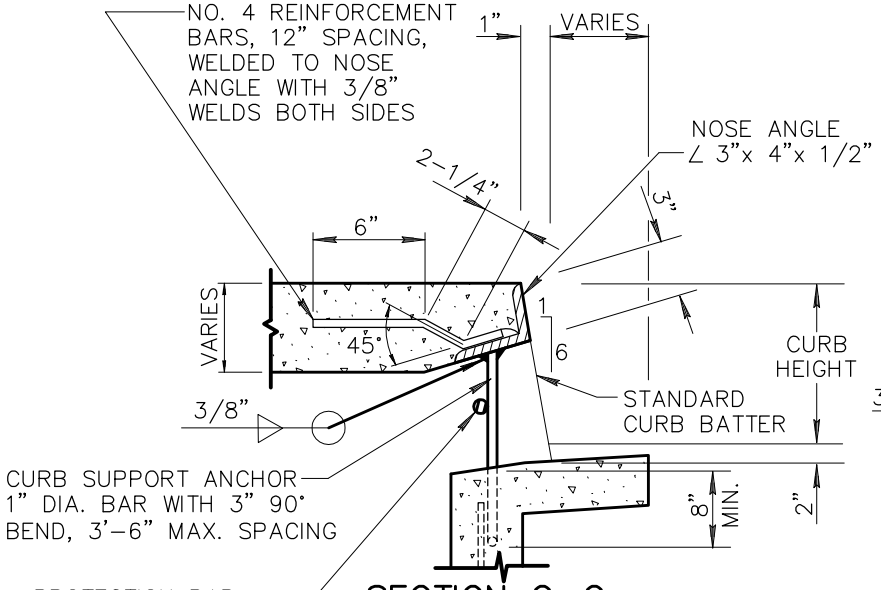

SECTION C-C

FOR DETAILS 531, 532 AND 533

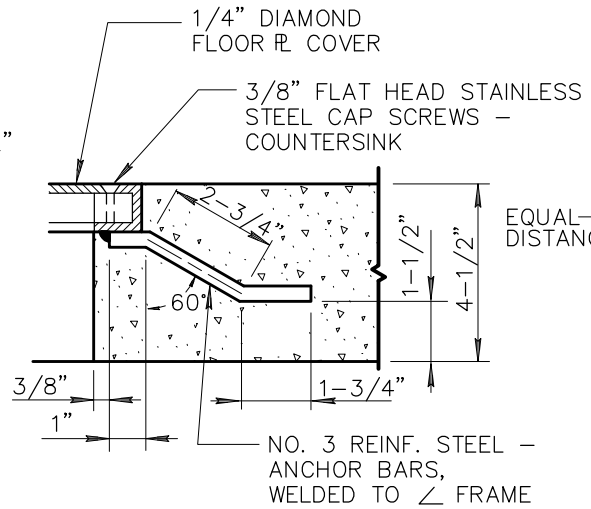

SECTION D-D

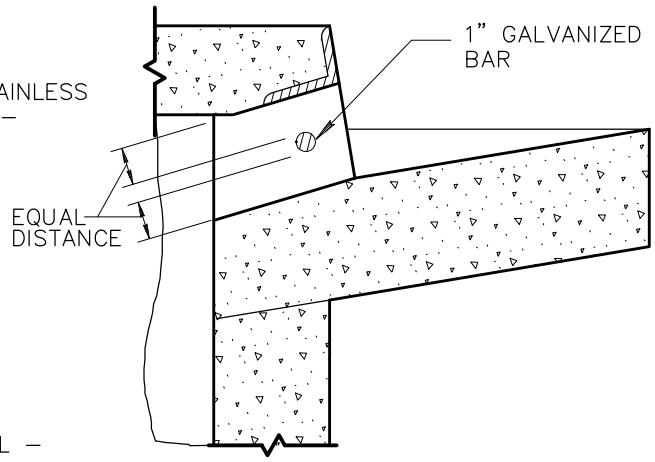

PROTECTION BAR

NOTES:

1) HORIZONTAL PLAIN ROUND GALVANIZED STEEL PROTECTION BAR SHALL BE USED WHEN CURB FACE IS 9" OR MORE.

2) THE BAR SHALL BE EMBEDDED 5" AT EACH END.

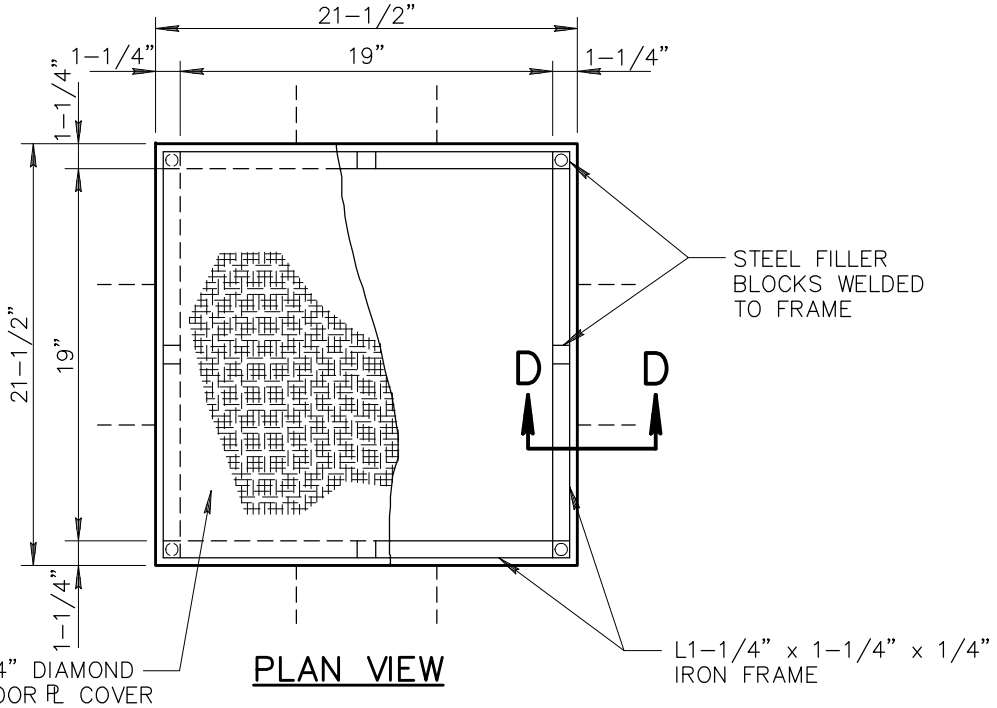

PLAN VIEW

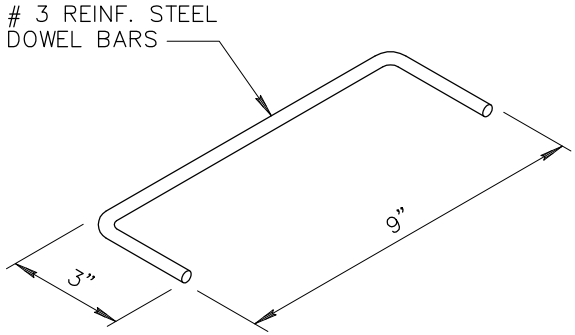

DOWEL BAR

DETAIL NO.		STANDARD DETAIL		REVISED	DETAIL NO.
536-1	MARICOPA ASSOCIATION of GOVERNMENTS	ENGLISH	COMMON DETAILS AND SECTIONS FOR CURB OPENING CATCH BASINS	01-01-1999	536-1

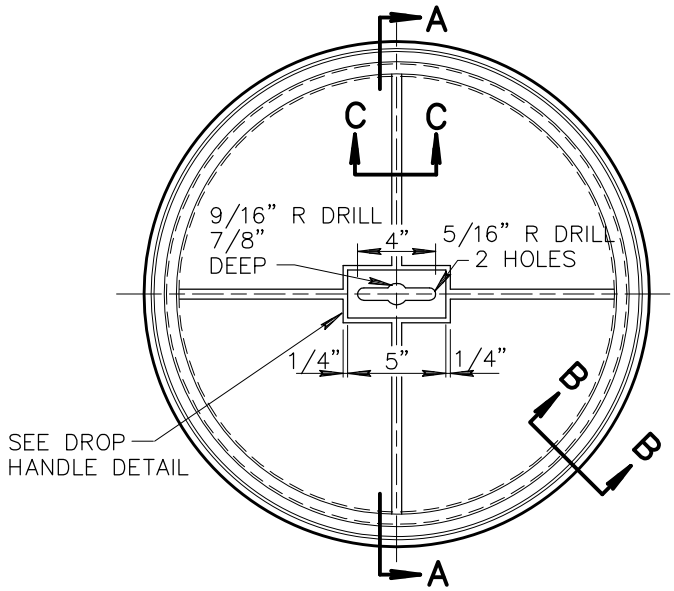

PLAN VIEW

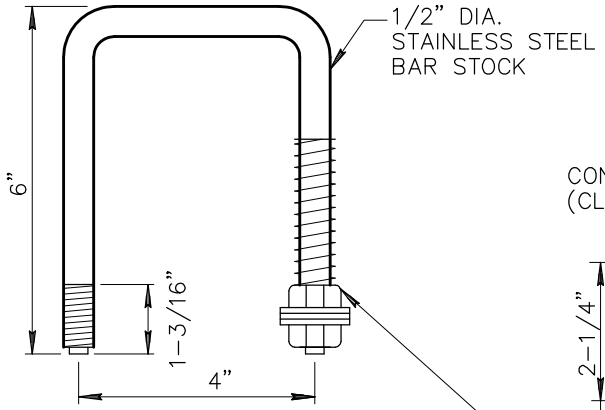

FURNISH FOR EACH SIDE OF HANDLE
1 EACH 304-S.STL. SPRING
2-1/2" x 17/32" I.C. x 3/32"
2 EACH 1/2" HEX NUT
3 EACH 1/2" FLAT WASHER
1 EACH 1/2" LOCK WASHER

DROP HANDLE

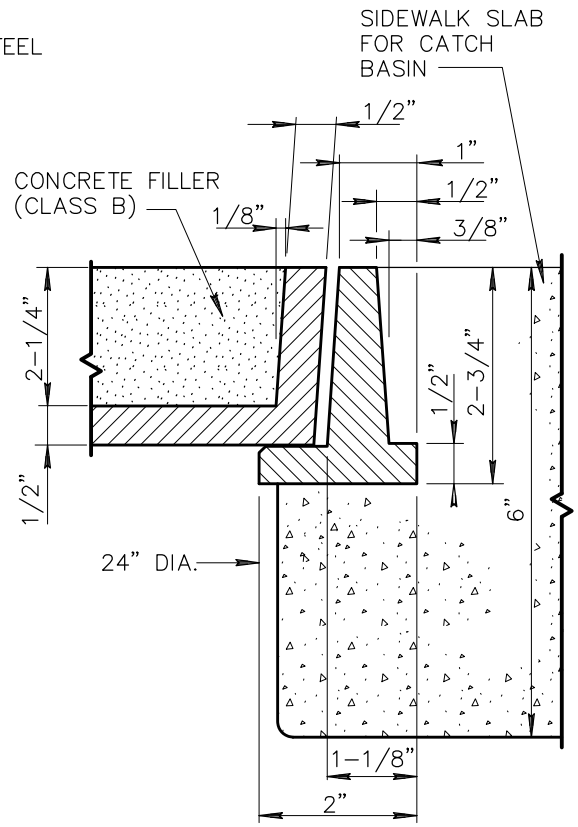

SECTION B-B

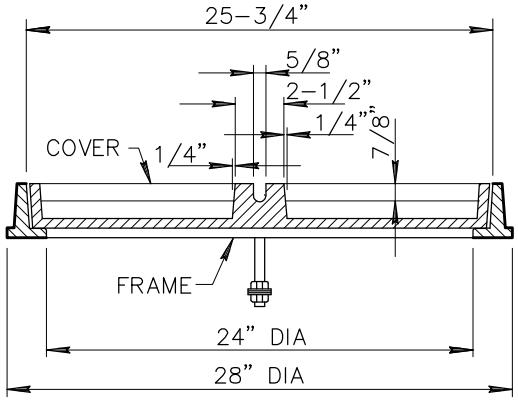

SECTION A-A

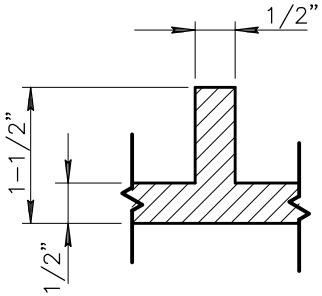

SECTION C-C

NOTES:

1. FRAME SHALL BE NON-LOCKING.
2. FRAME AND COVER SHALL BE CAST IRON OR ASTM A-36 STRL. HORIZONTIAL SURFACE OF COVER IN CONTACT WITH FRAME SHALL BE MACHINED. ASA B-46 ROUGHNESS SHALL NOT EXCEED 1/32".
3. COVER SHALL BE FILLED WITH CONCRETE AND BROOM FINISHED.
4. SMALL VARIATIONS IN DIMENSIONS OF FEATURES OF A MINOR NATURE THAT ARE PART OF THE FOUNDRY'S CASTING ARE PERMISSIBLE.

DETAIL NO.		STANDARD DETAIL		REVISED	DETAIL NO.
536-2	MARICOPA ASSOCIATION of GOVERNMENTS	ENGLISH	ALTERNATE COVER FOR CURB OPENING CATCH BASINS	01-01-1998	536-2

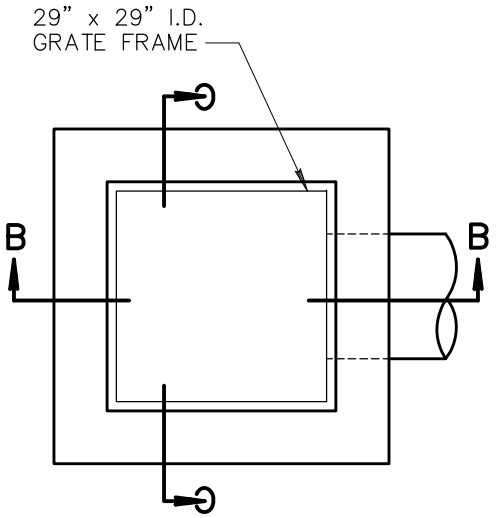

PLAN

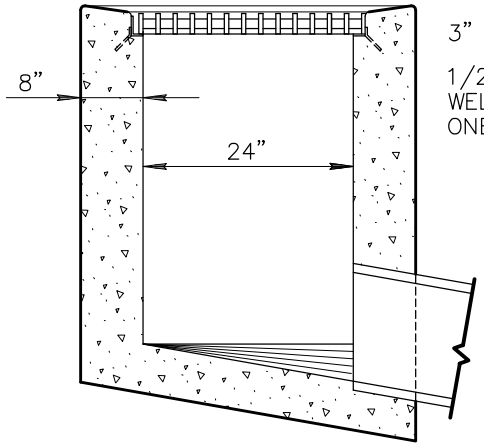

SECTION B–B

SINGLE GRATE

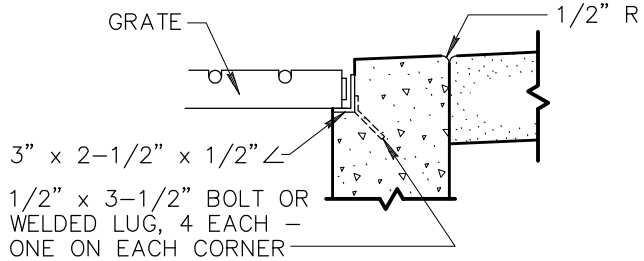

DETAIL OF ANGLE FRAME GRATE SUPPORT

ALL CONCRETE SHALL BE CLASS 'A' PER SECT. 725. EXPOSED EDGES SHALL BE FINISHED WITH A 1/2" RADIUS.

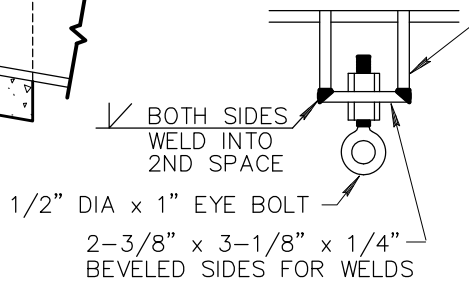

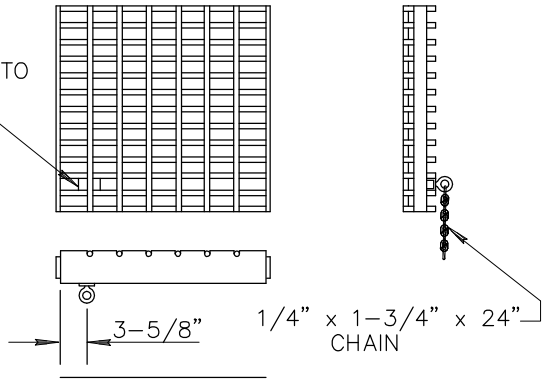

BAR GRATE

SEE DETAIL 539

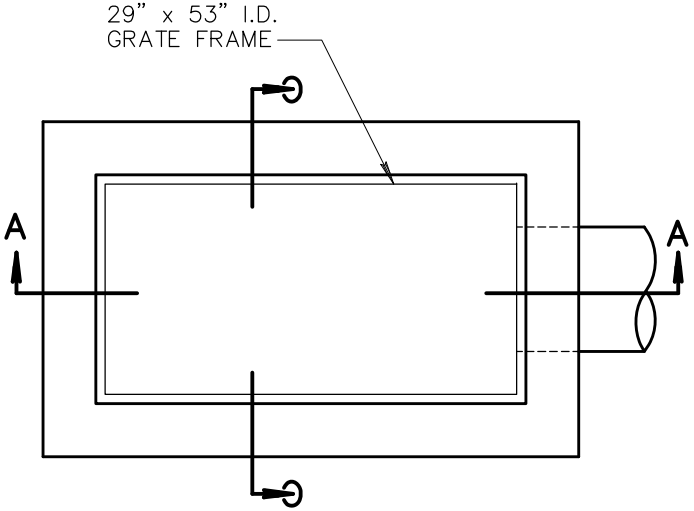

PLAN

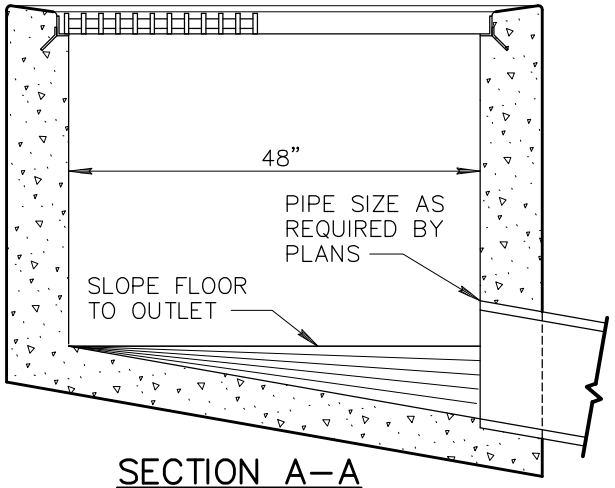

SECTION A–A

DOUBLE GRATE

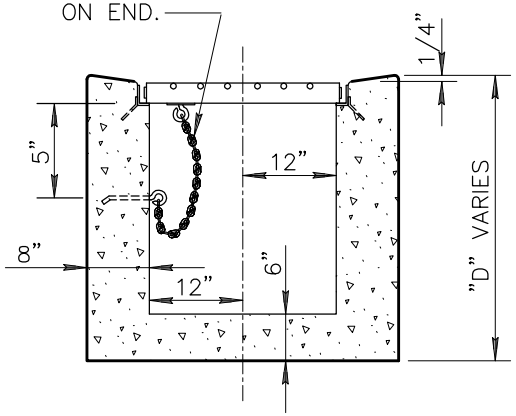

SECTION C–C

DETAIL NO.				REVISED	DETAIL NO.
537	MARICOPA ASSOCIATION of GOVERNMENTS	STANDARD DETAIL ENGLISH	CATCH BASIN – TYPE 'G'	01–03–2002	537

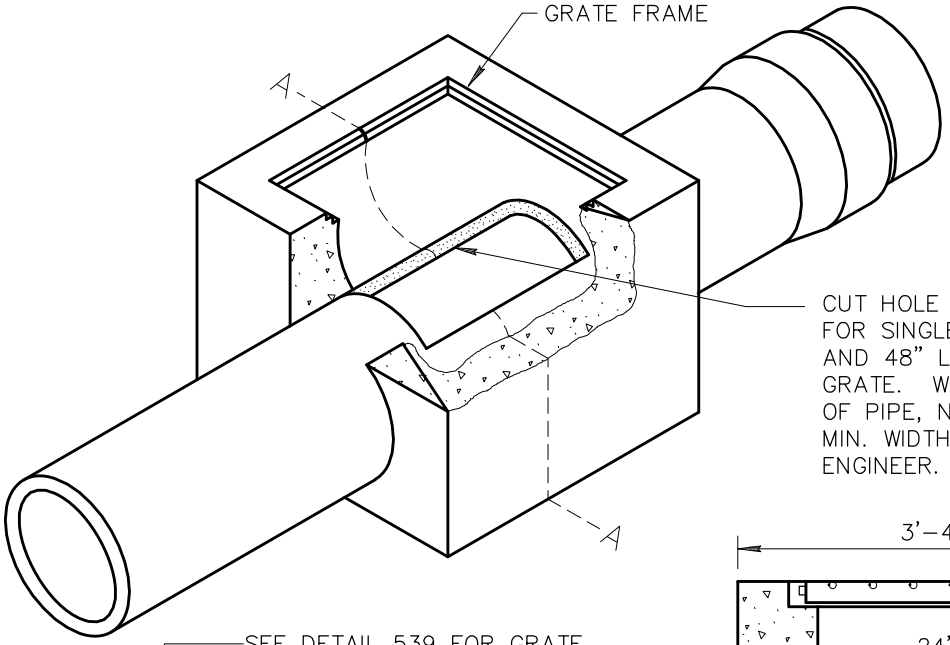

WHEN DOUBLE GRATE IS USED INCREASE THE LENGTH OF THE STRUCTURE ACCORDINGLY.

CUT HOLE IN PIPE 24" LONG FOR SINGLE GRATE STRUCTURES AND 48" LONG FOR DOUBLE GRATE. WIDTH DEPENDS ON DIA. OF PIPE, NOT TO EXCEED 22" MIN. WIDTH TO BE SET BY PROJECT ENGINEER.

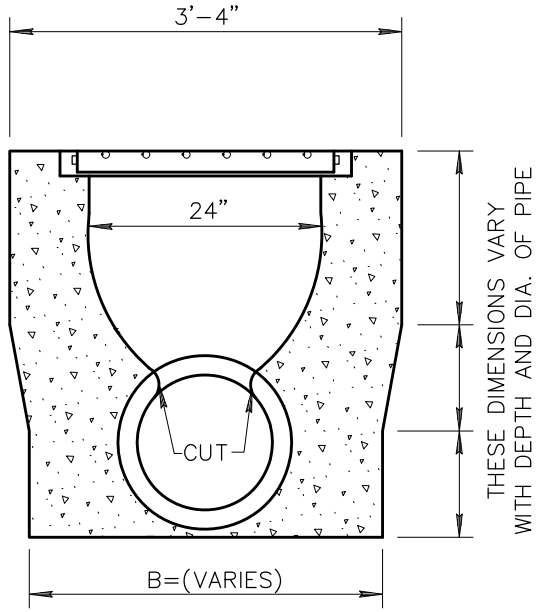

SECTION A-A

SEE DETAIL 539 FOR GRATE

29" x 29" I.D. SINGLE FRAME
29" x 53" I.D. DOUBLE FRAME

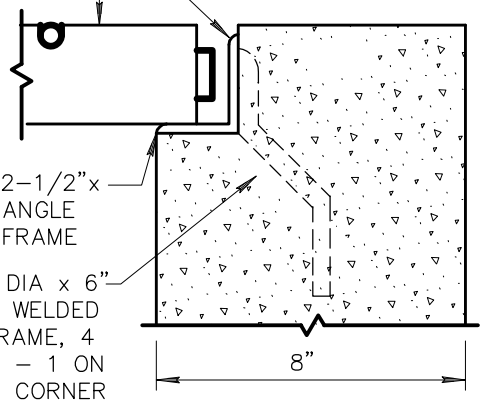

DETAIL OF ANGLE FRAME GRATE SUPPORT

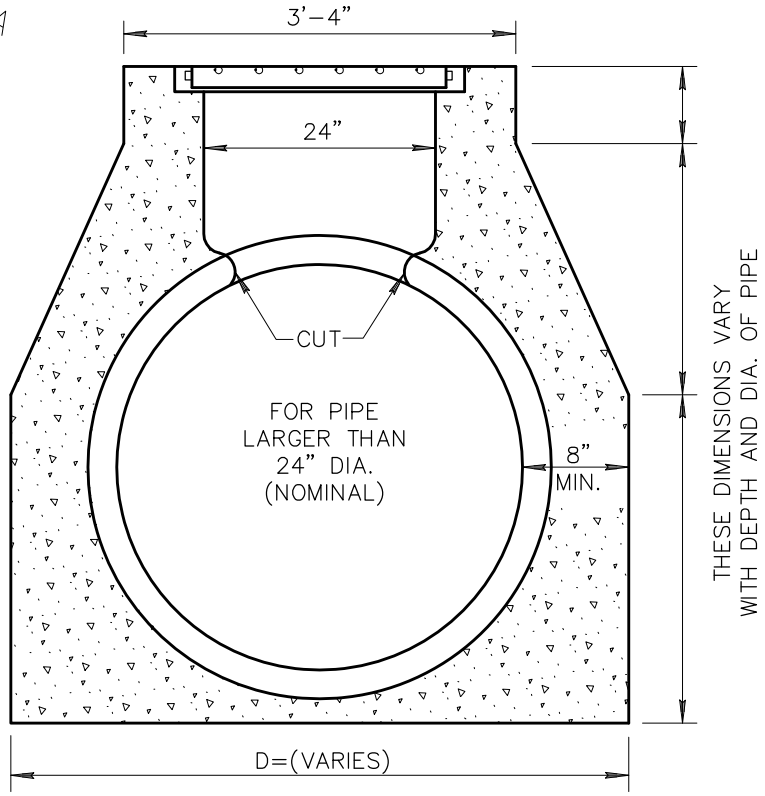

SECTION A-A

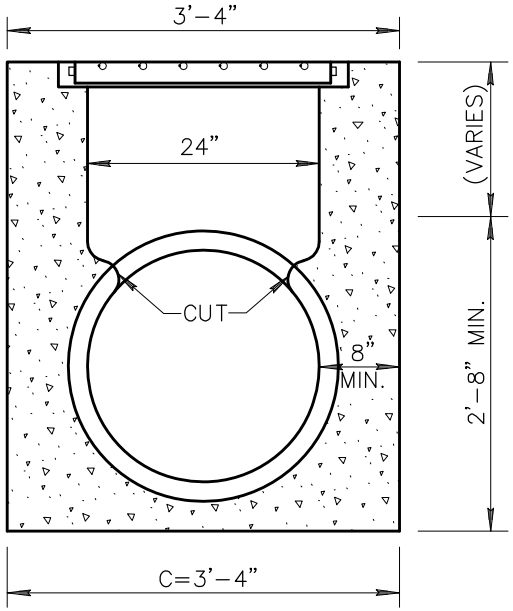

SECTION A-A
24" PIPE (NOMINAL)

DETAIL NO.		STANDARD DETAIL		REVISIONS	DETAIL NO.
538	MARICOPA ASSOCIATION of GOVERNMENTS	ENGLISH	CATCH BASIN - TYPE 'H'	01-01-1998	538

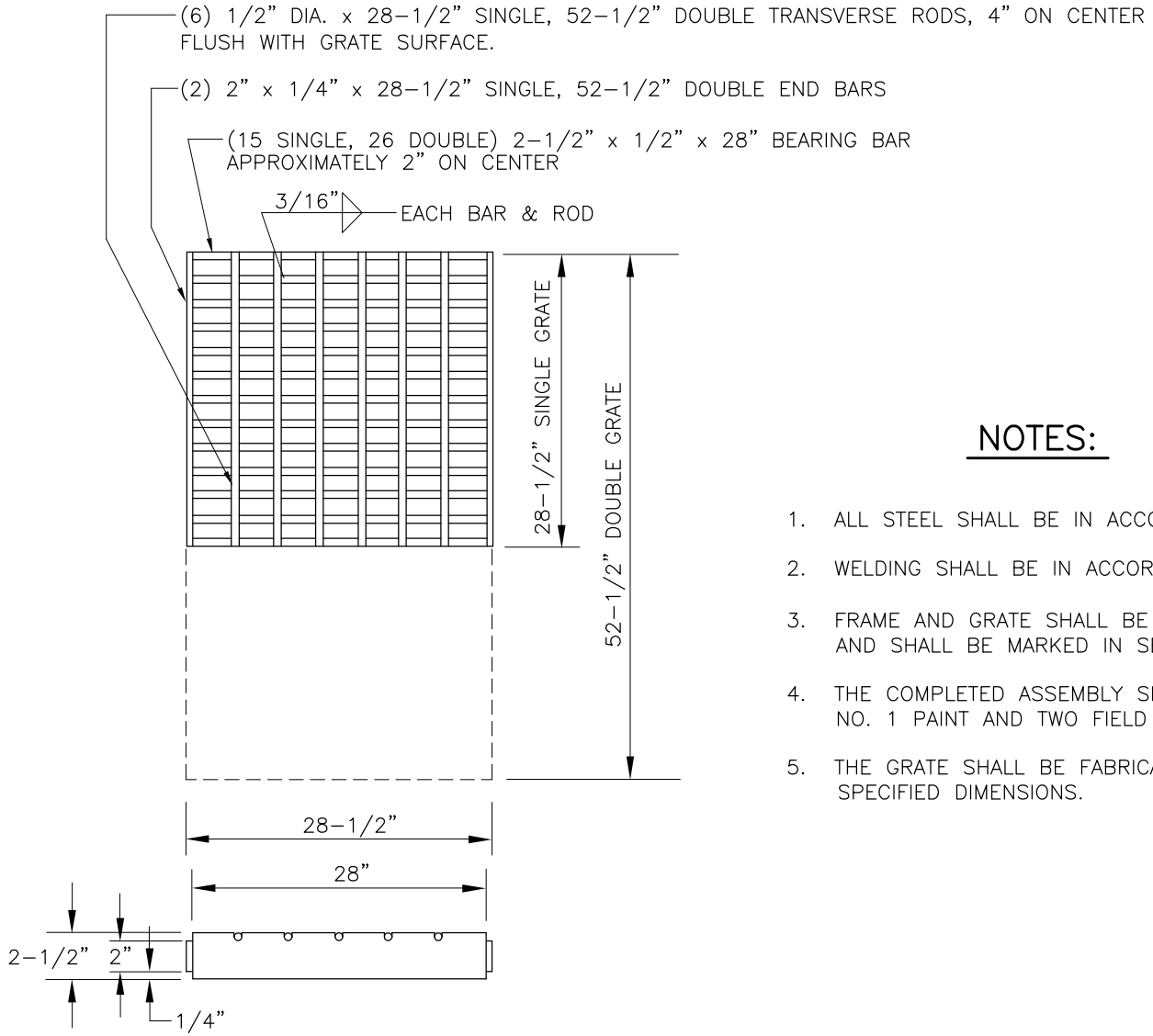

NOTES:

1. ALL STEEL SHALL BE IN ACCORDANCE WITH A.S.T.M. A-36.
2. WELDING SHALL BE IN ACCORDANCE WITH A.W.S. SPECIFICATIONS.
3. FRAME AND GRATE SHALL BE TESTED FOR ACCURACY OF FIT AND SHALL BE MARKED IN SETS BEFORE DELIVERY.
4. THE COMPLETED ASSEMBLY SHALL BE GIVEN ONE SHOP COAT OF NO. 1 PAINT AND TWO FIELD COATS OF NO. 10 PAINT AS PER SECTION 790.
5. THE GRATE SHALL BE FABRICATED TO WITHIN 1/8" SPECIFIED DIMENSIONS.

DETAIL NO.				REVISED	DETAIL NO.
539	MARICOPA ASSOCIATION of GOVERNMENTS	STANDARD DETAIL ENGLISH	GRATES FOR CATCH BASINS, TYPE G AND H	01-01-1998	539

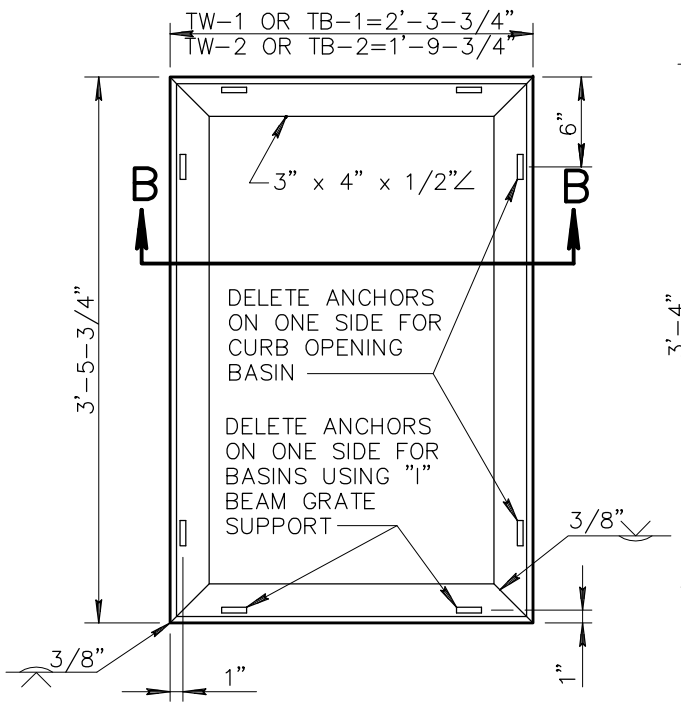

PLAN I

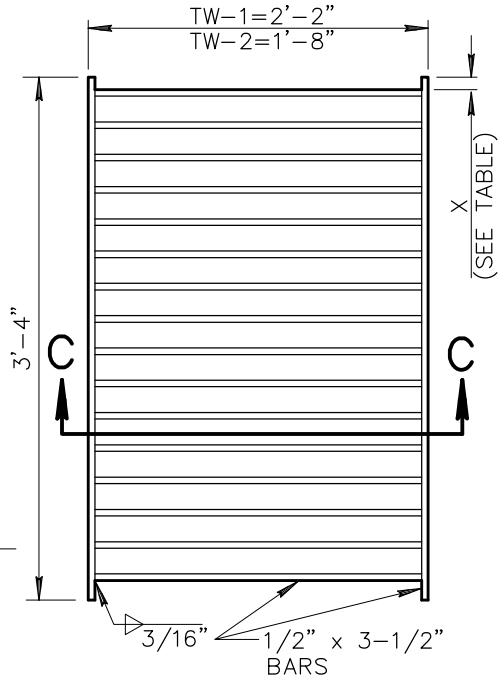

PLAN IA

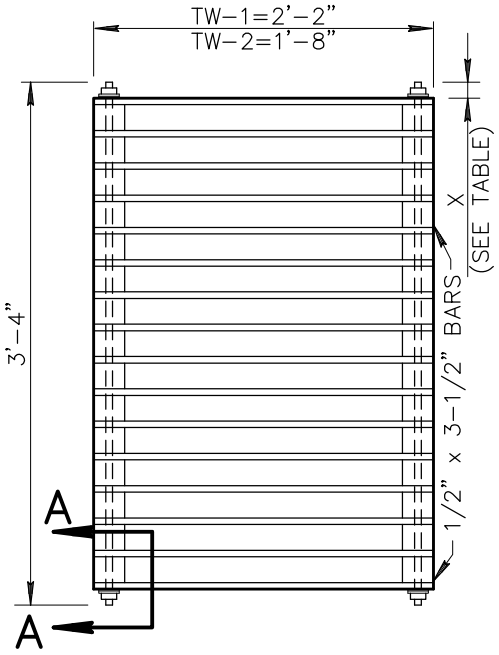

PLAN IB

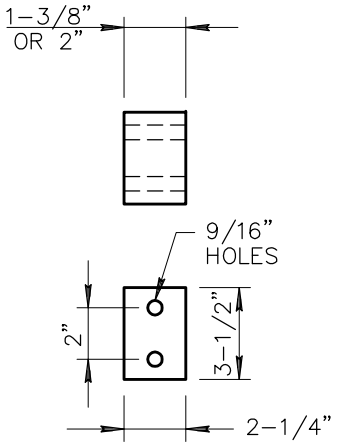

CAST IRON, CAST STEEL OR STEEL BAR STOCK

BAR SPACER DETAIL

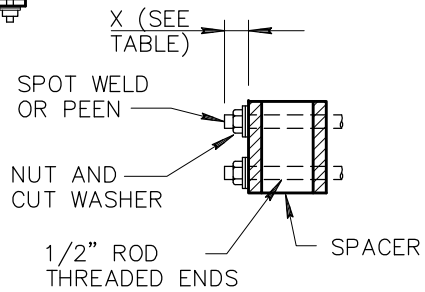

SECTION A-A

GRATE TYPES TB-1 AND TB-2

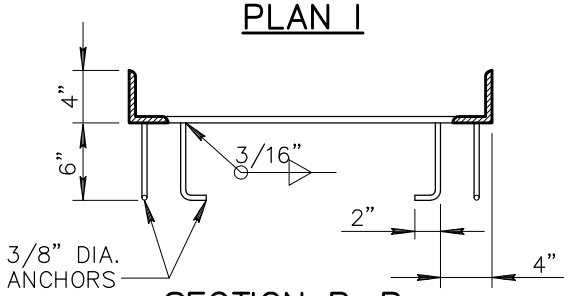

SECTION B-B

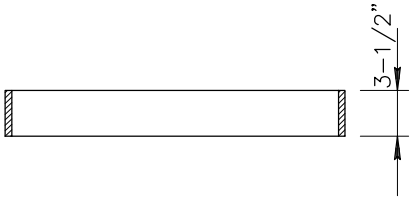

SECTION C-C

GRATE TYPES TW-1 AND TW-2

NOTES:

1. GRATING UNITS AND FRAMES SHALL BE FABRICATED FROM STRUCTURAL STEEL EXCEPT AS NOTED.
2. WELDING SHALL BE IN ACCORDANCE WITH STD. WELDING SPECS.
3. THE COMPLETED ASSEMBLY SHALL BE GIVEN TWO SHOP COATS OF NO. 1 PAINT AS PER SECT. 790.
4. FRAME AND GRATE SHALL FIT TO A MAX. ROCK OF 0.093" AT ANY POINT.
5. RESTRICT USE TO GRADES OF 3% OR LESS.

BAR TABLE

TYPE	CLEAR SPACING	NO. BARS	X	GRATE OPENING ft^2
TW OR TB-1.0	1"	26	1"	3.21
TW OR TB-1.1	1-3/8"	21	1"	3.32
TW OR TB-1.2	2"	16	1"	4.66
TW OR TB-2.0	1"	26	1"	2.32
TW OR TB-2.1	1-3/8"	21	1"	2.41
TW OR TB-2.2	2"	16	1"	2.65

TW INDICATES TRANSVERSE WELDED
TB INDICATES TRANSVERSE BOLTED

DETAIL NO.				REVISED	DETAIL NO.
540-1	MARICOPA ASSOCIATION of GOVERNMENTS	STANDARD DETAIL ENGLISH	CATCH BASIN GRATES	01-01-1998	540-1

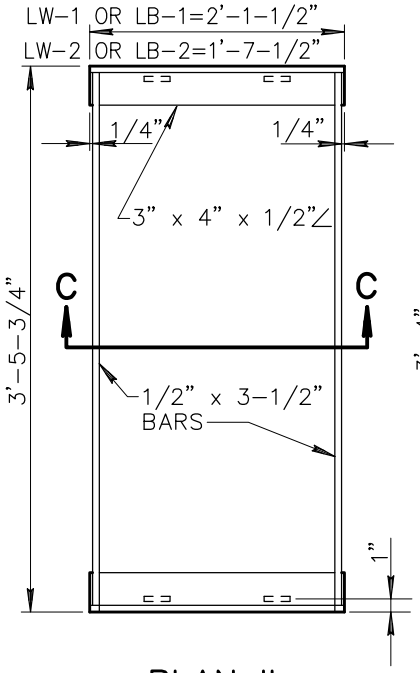

PLAN II

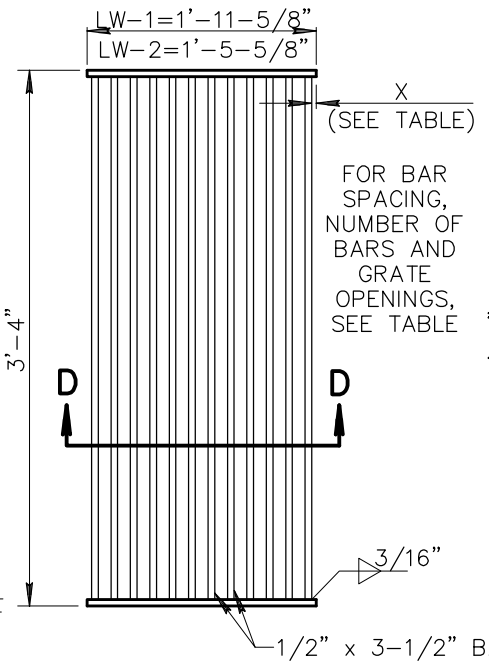

PLAN IIA

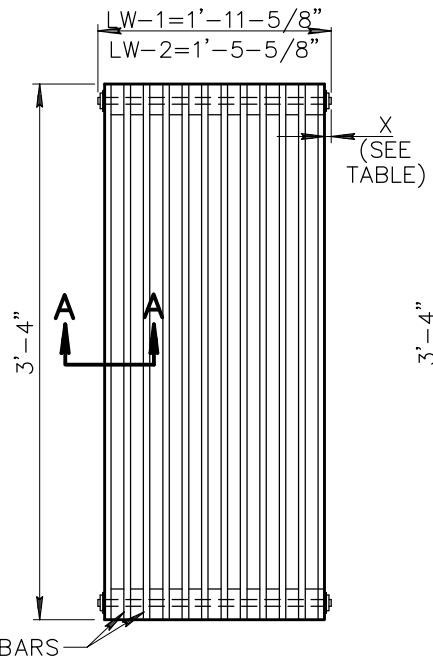

PLAN IIB

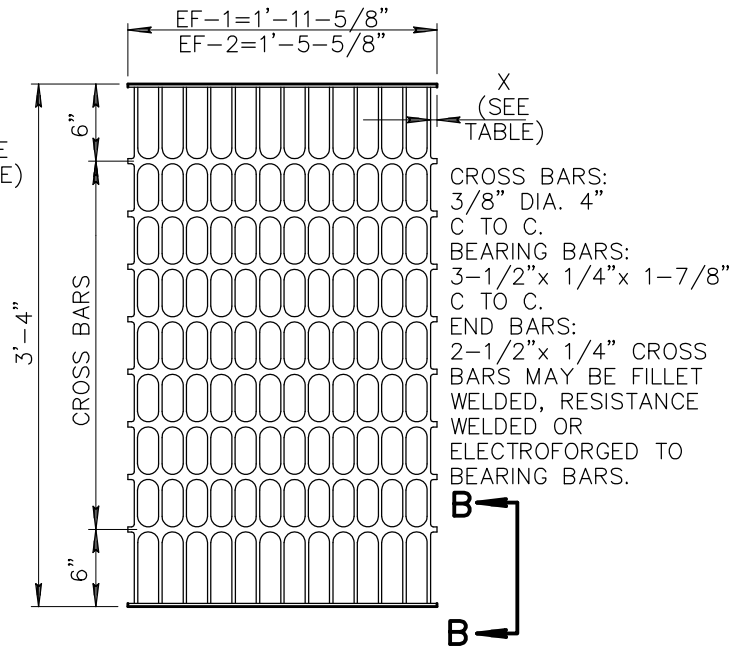

PLAN II

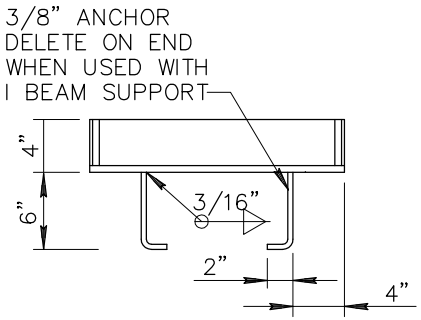

SECTION C-C

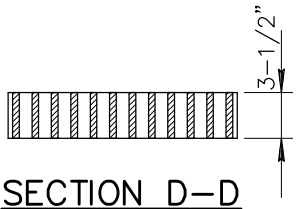

SECTION D-D

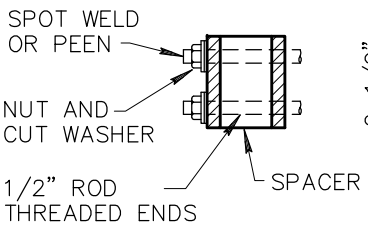

SECTION A-A

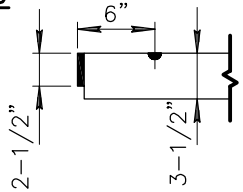

SECTION B-B

NOTES:

1. LW INDICATES LONGITUDINAL WELDED.
2. LB INDICATES LONGITUDINAL BOLTED.
3. EF INDICATES ELECTROFORGED.
4. GRATING UNITS AND FRAMES SHALL BE FABRICATED FROM STRUCTURAL STEEL 'A-36 EXCEPT AS NOTED.
5. ALL WELDING SHALL BE IN ACCORDANCE WITH STANDARD WELDING SPECIFICATIONS.
6. THE COMPLETED ASSEMBLY SHALL BE GIVEN ONE SHOP COAT OF NO. 1 PAINT.
7. FRAMES AND GRATES SHALL FIT TO A MAXIMUM ROCK OF 0.093" AT ANY POINT.
8. GRATE TYPE LW AND EF RESTRICTED TO SLOPES OF 3% OR LESS
9. GRATES TYPE LB USE LONGITUDINAL GRADES IN EXCESS OF 3% OR AS AN ALTERNATE TO TYPES LW OR EF ON GRADES OF 3% OR LESS.

GRATE TYPE	CLEAR BAR SPACING	NO. BARS	X	GRATE OPENING ft^2
LW OR LB-1.0	1"	16	5/16"	3.97
LW OR LB-1.1	1-3/8"	13	5/16"	4.34
LW OR LB-1.2	2"	9	1-9/16"	4.84
EF-1	1-5/8"	13	7/16"	4.66
LW OR LB-2.0	1"	12	5/16"	2.98
LW OR LB-2.1	1-3/8"	9	1-1/16"	3.35
LW OR LB-2.2	2"	7	1-1/16"	3.60
EF-2	1-5/16"	10	1/4"	3.48

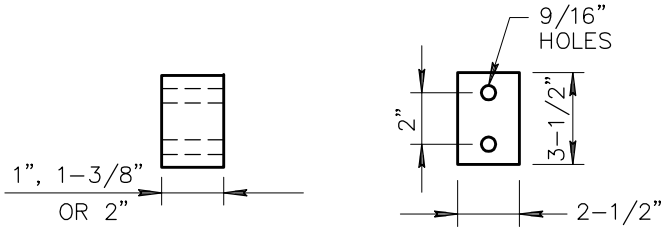

BAR SPACER DETAIL

CAST IRON, CAST STEEL OR STEEL BAR STOCK

DETAIL NO.			REVISED	DETAIL NO.
540-2	MARICOPA ASSOCIATION of GOVERNMENTS — STANDARD DETAIL ENGLISH	CATCH BASIN GRATES	01-01-1998	540-2

NOTES:

1. INSTALL WHEN REQUIRED BY PLANS, SPECIFICATIONS, OR APPROVED BY THE ENGINEER.
2. SEE PROJECT PLANS FOR CATCH BASIN DETAILS AND PAVEMENT STRUCTURAL SECTION.

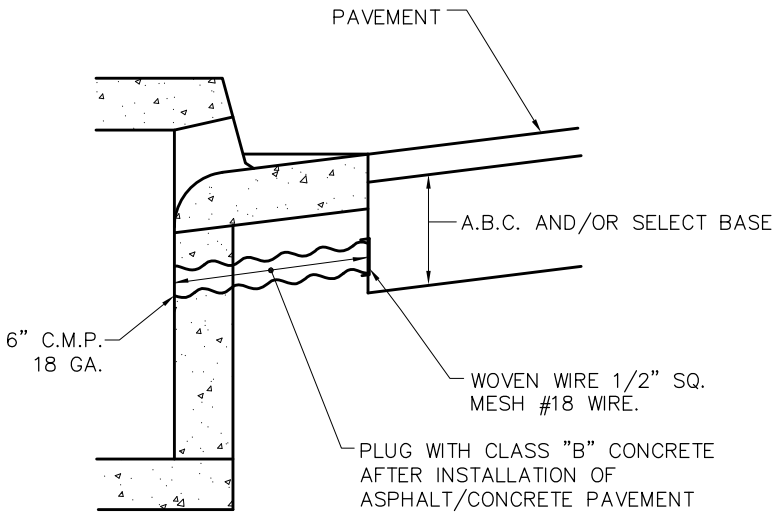

CURB OPENING INLET

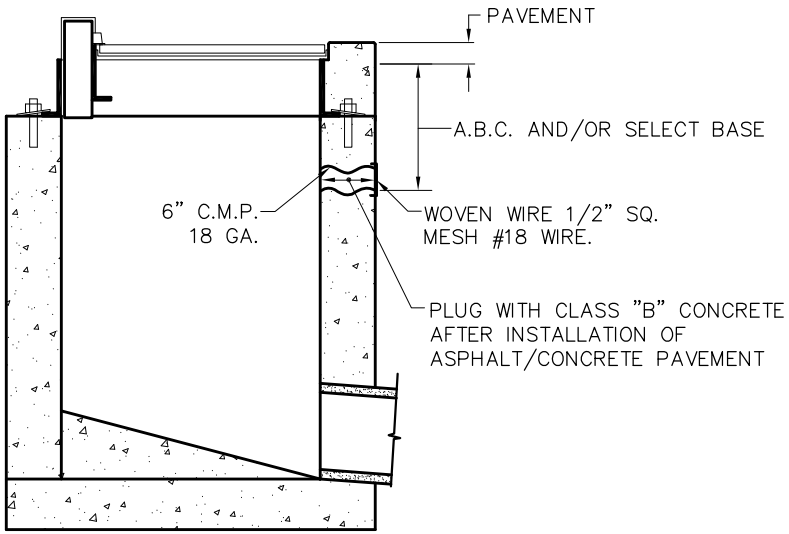

GRATE OPENING INLET

DETAIL NO.				REVISED	DETAIL NO.
541	MARICOPA ASSOCIATION of GOVERNMENTS	STANDARD DETAIL ENGLISH	CATCH BASIN SUBGRADE DRAIN	01-01-2005	541

PIPE DIA.	APPROX. WEIGHT (LBS.)	DIMENSIONS – INCHES						APPROX. SLOPE
		T	A	B	C	E	F	
24"	1520	3	9–1/2	43–1/2	30	73–1/2	48	3
27"	1930	3–1/4	10–1/2	49–1/2	24	73–1/2	54	3
30"	2190	3–1/2	12	54	19–3/4	73–3/4	60	3
36"	4100	4	15	63	34–3/4	97–3/4	72	3
42"	5380	4–1/2	21	63	35	98	78	3
48"	6550	5	24	72	26	98	84	3
54"	8240	5–1/2	27	65	33–1/4	98–1/4"	90	2 1/2

NOTES

1. DESIGN OF END SECTION SHALL CONFORM TO STANDARD FOR REINFORCED CONCRETE PIPE.
2. END SECTION JOINT CONFORMATION SHALL MATCH THE PIPE JOINTS.
3. EMBANKMENT SLOPE SHALL BE WARPED TO MATCH SLOPE OF END SECTION.
4. CULVERT LENGTH IS AS SHOWN ON PLANS.

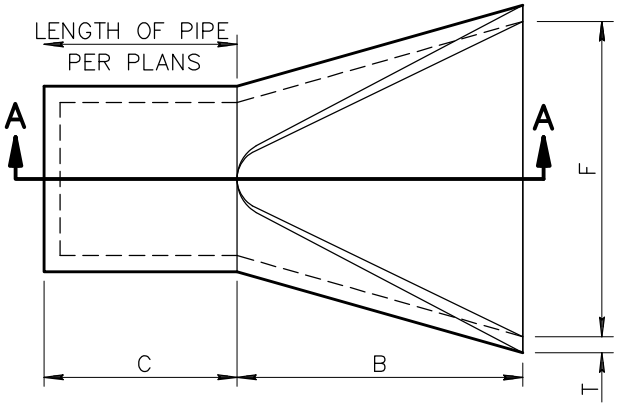

PLAN

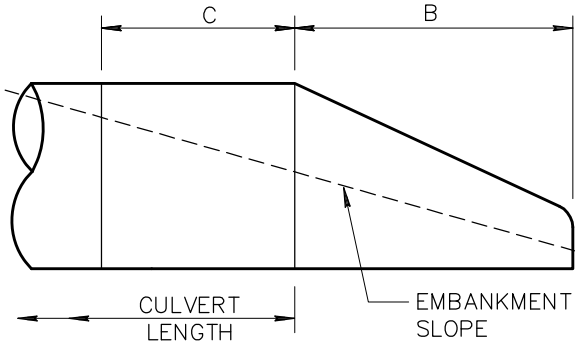

RIGHT ANGLE CULVERT

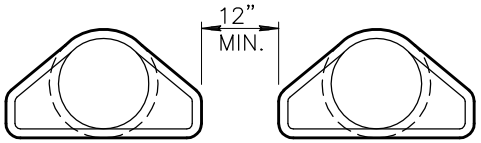

SPACING FOR MULTIPLE INSTALLATION

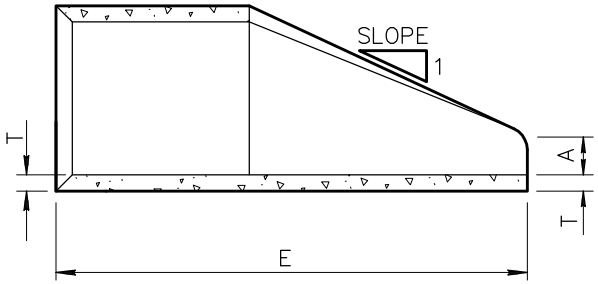

SECTION A–A

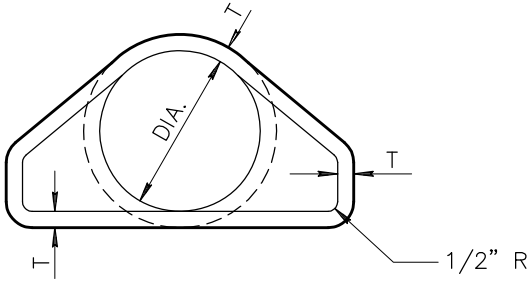

FRONT ELEVATION

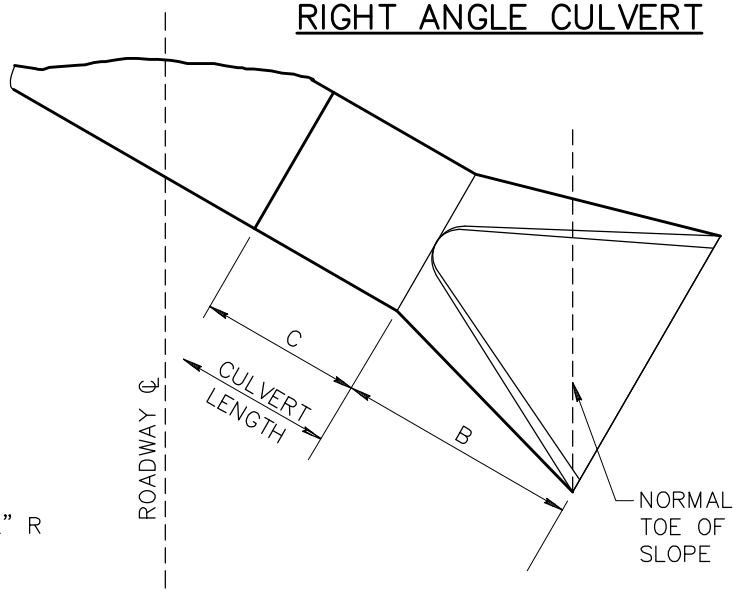

SKEWED CULVERT

DETAIL NO.				REVISED	DETAIL NO.
545	MARICOPA ASSOCIATION of GOVERNMENTS	STANDARD DETAIL ENGLISH	END SECTION–REINFORCED CONCRETE PIPE	01–01–1998	545

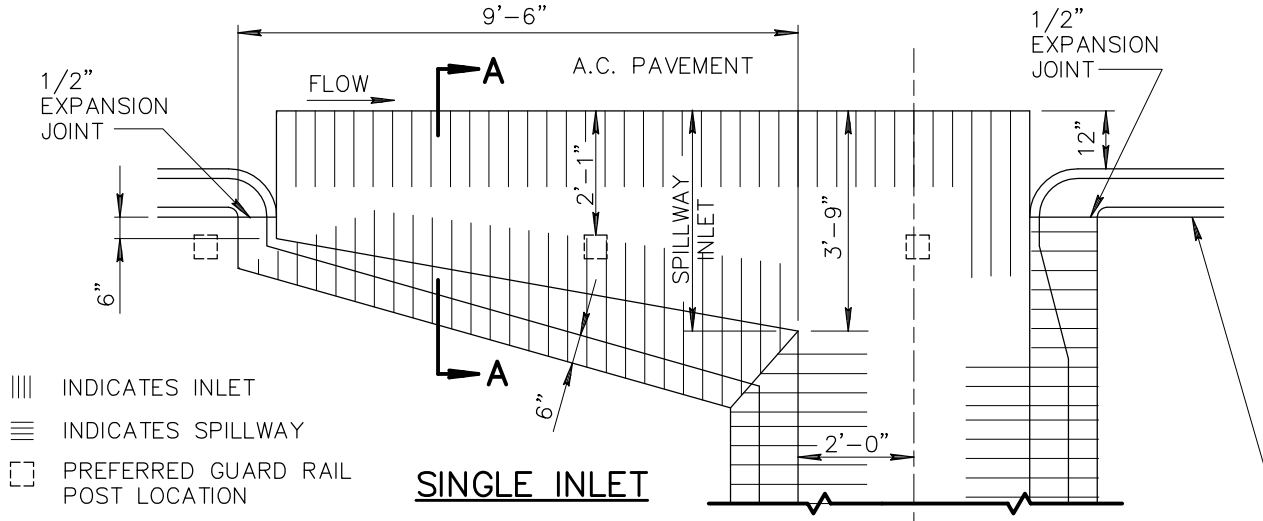

SINGLE INLET

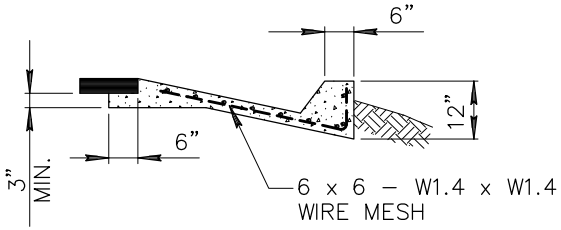

SECTION A–A

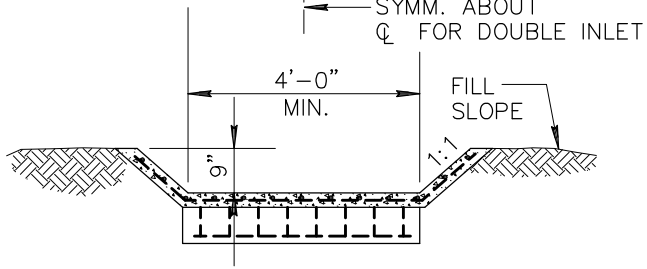

SPILLWAY SECTION

NOTES:

1. WHERE ROCK IS ENCOUNTERED THE OUTLET MAY BE OMITTED.
2. ALL PORTIONS OF SPILLWAY TO BE TROWEL FINISHED.
3. CONCRETE FOR THE SPILLWAY INLET, SPILLWAY AND OUTLET SHALL BE CLASS 'B' PER SECT. 725.
4. WHEN THE OUTLET IS USED, THE WIRE MESH SHALL EXTEND THROUGH THE JOINT INTO THE OUTLET IN LIEU OF BENDING INTO THE KEY.

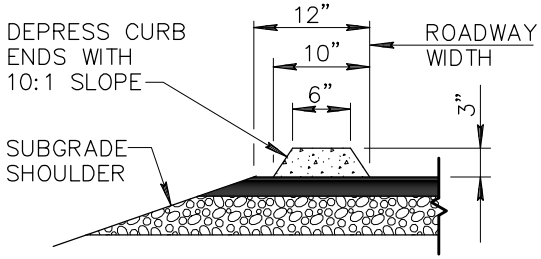

EMBANKMENT CURB/EXTRUDED (OPTIONAL)

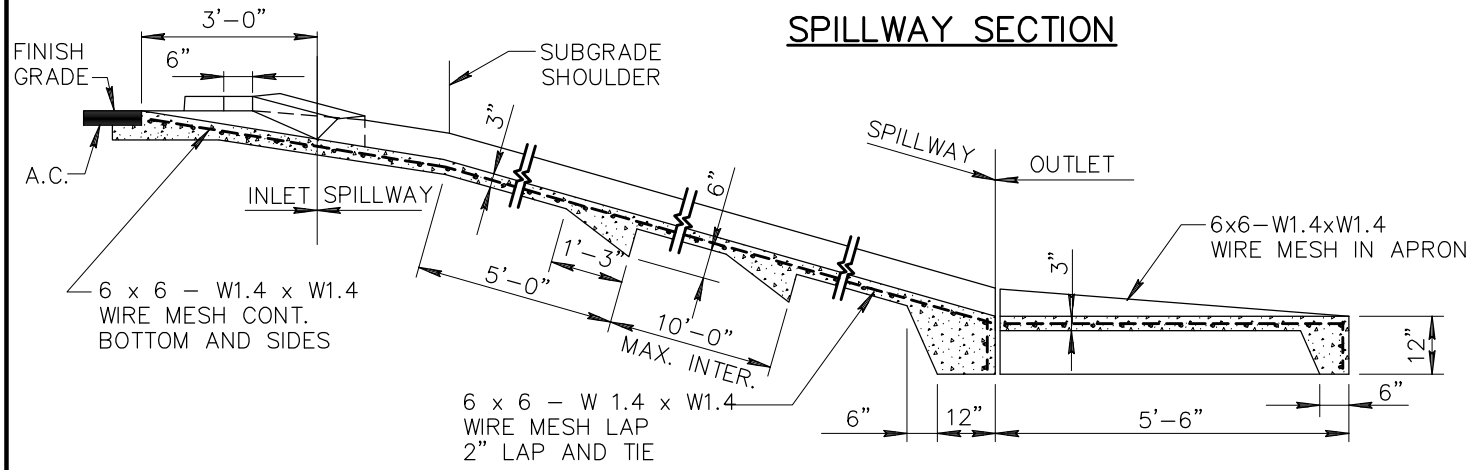

SECTION ON SPILLWAY ℄ DOUBLE INLET

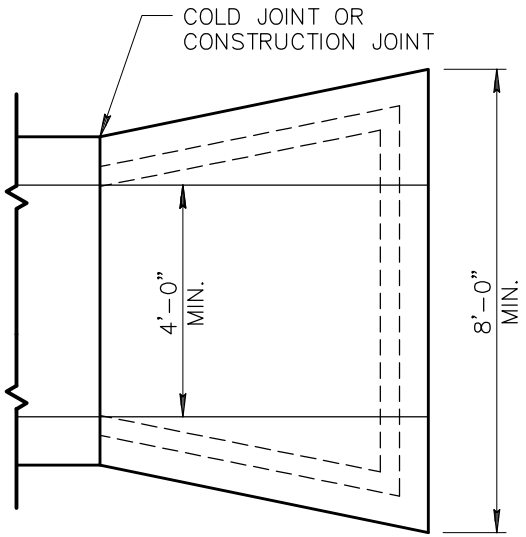

DETAIL NO.				REVISED	DETAIL NO.
550	MARICOPA ASSOCIATION of GOVERNMENTS	STANDARD DETAIL ENGLISH	SPILLWAY INLET AND OUTLET	01–01–1998	550

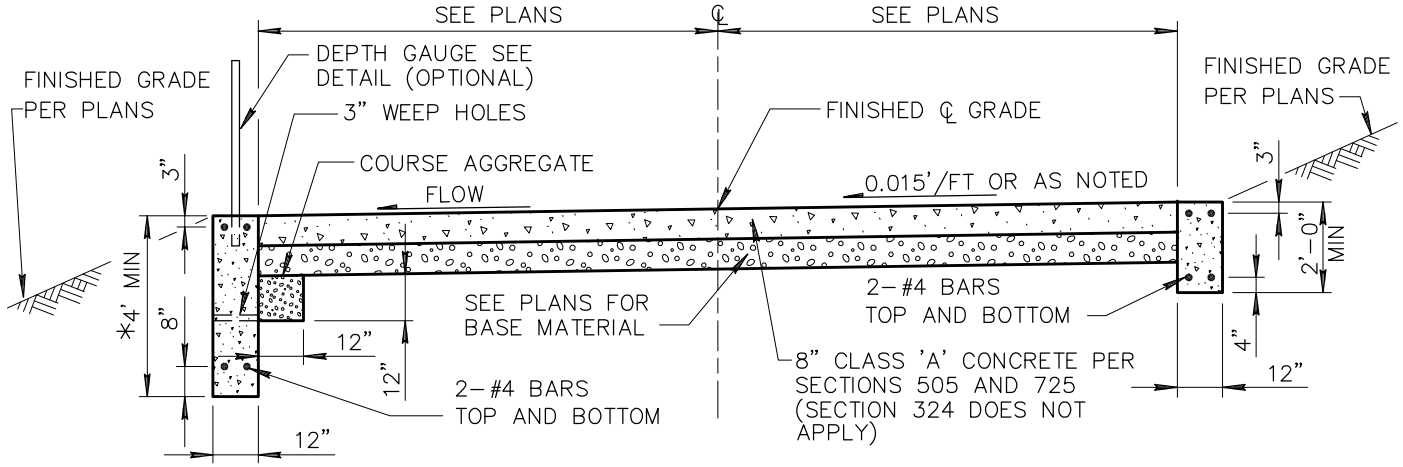

CONCRETE SURFACE FORD CONCRETE WALLS

*MIN. DISTANCE BELOW STREAM BED

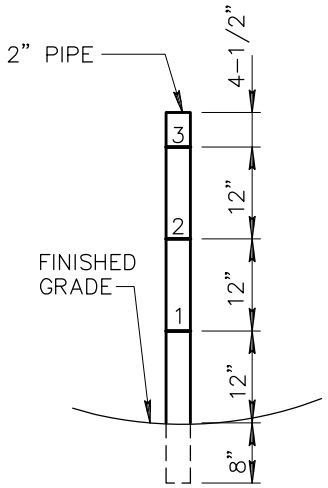

DEPTH GUAGE DETAIL

(OPTION OF THE CONTRACTING AGENCY)

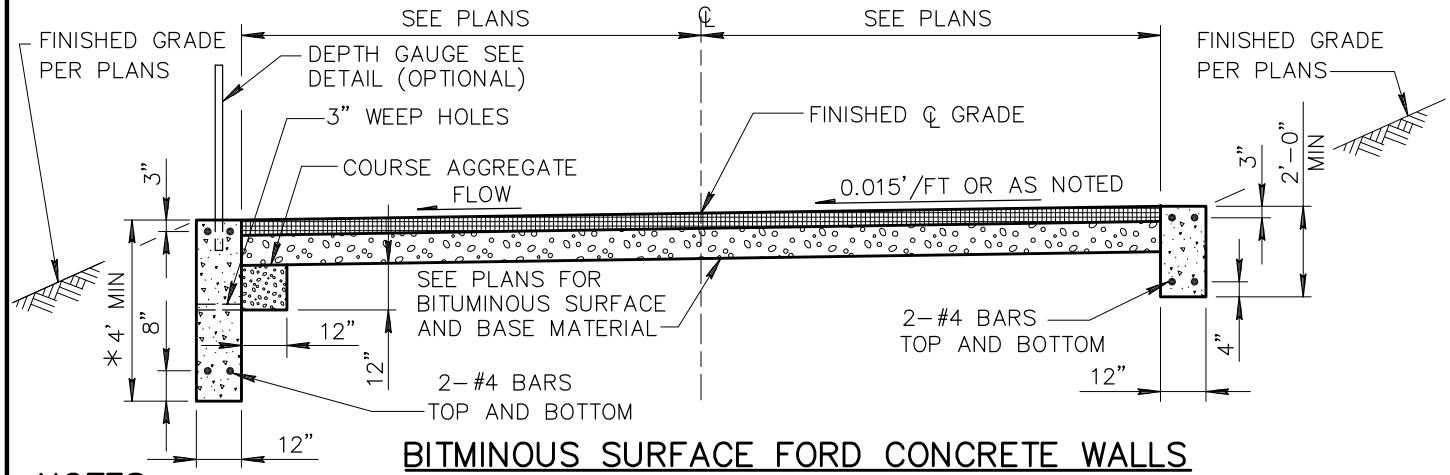

BITMINOUS SURFACE FORD CONCRETE WALLS

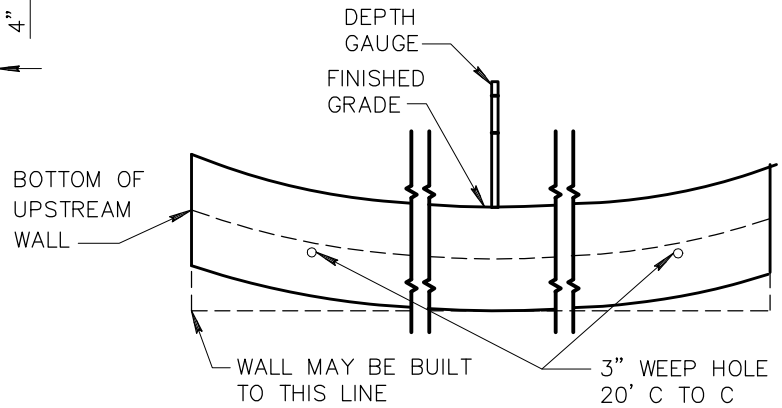

ELEVATION LOOKING UPSTREAM

NOTES:

1. FORD WALLS SHALL BE CLASS 'A' CONCRETE PER SECT. 725.
2. DEPTH GAUGE SHALL BE PAINTED 2 COATS WHITE ENAMEL. NUMERALS AND MARKERS SHALL BE 1 COAT BLACK ENAMEL.
3. NUMBERS ON DEPTH GAUGE TO BE 2" HIGH.
4. HEIGHT OF DEPTH GAUGE PER PLANS.
5. REINFORCING BARS SHALL BE SET 3" CLEAR FROM SIDES OF CUT-OFF WALLS.
6. COURSE AGGREGATE AT WEEP HOLES SHALL BE ASTM C33 SIZE 57, ENCLOSED IN FILTER FABRIC (SECTION 796, CLASS B), AND EXTENDED LATERALLY A MINIMUM OF SIX-INCHES (6") ON EACH SIDE OF THE WEEP HOLE.

DETAIL NO.		STANDARD DETAIL		REVISED	DETAIL NO.
552	MARICOPA ASSOCIATION of GOVERNMENTS	ENGLISH	FORD CROSSING AND CUT-OFF WALLS	01-01-2015	552

TYPICAL GABIONS

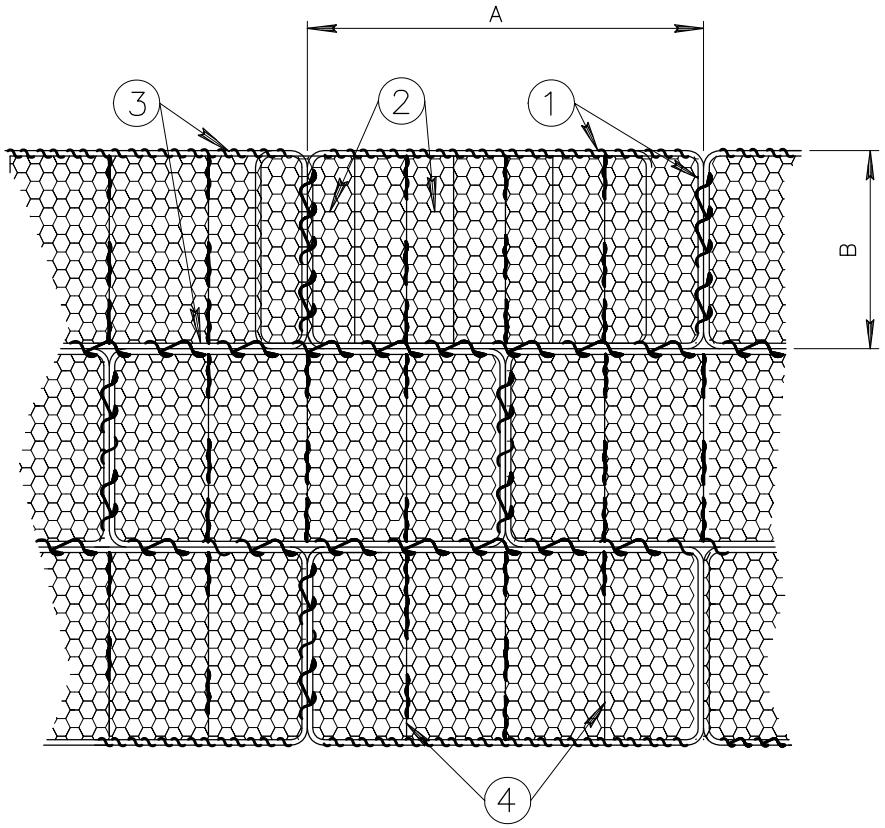

PLAN

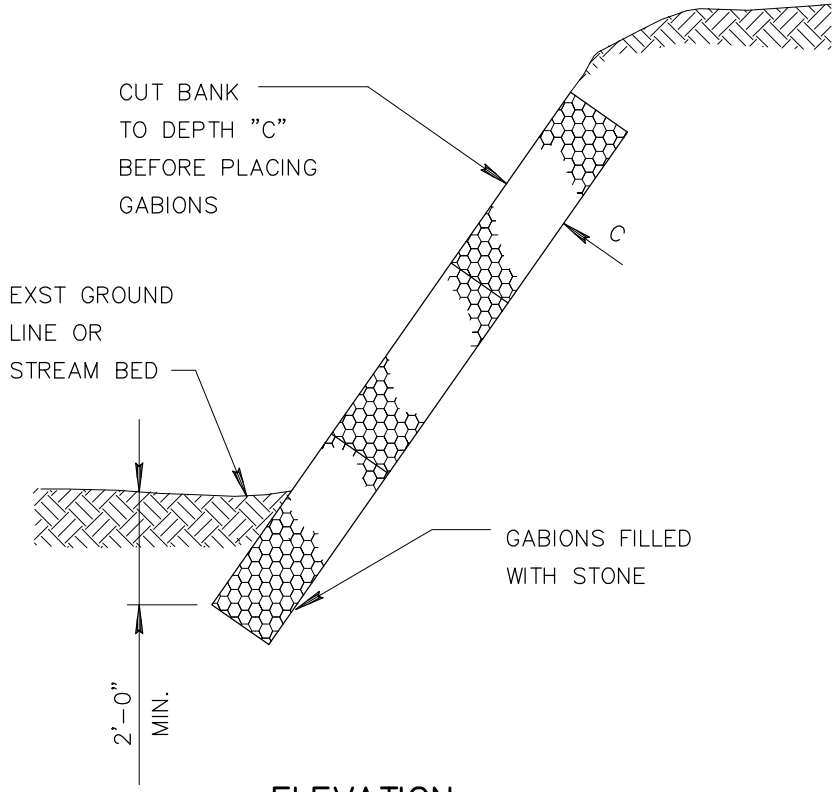

ELEVATION

1. HEAVY GAUGE FRAME WIRE.
2. HEAVY GAUGE TRIPLE-TWIST HEXAGONAL MESH (OR EQUAL) FASTENED TO FRAME WIRE.
3. CONTINUOUS HEAVY GAUGE WRAPPED AROUND FRAMES TO FASTEN GABIONS TO EACH OTHER.
4. PARTITIONS TO PREVENT SHIFTING, NORMALLY ONE PER 3' LENGTH. INSTALLED AT FACTORY.

NOMINAL SIZE COMBINATIONS		
LENGTH	WIDTH	DEPTH
A	B	C
6'	3'	1' 1.5' 3'
9'	3'	1' 1.5' 3'
12'	3'	1' 1.5' 3'

NOTE:

OTHER SIZES AVAILABLE FROM MANUFACTURER.

DETAIL NO.				REVISED	DETAIL NO.
555	MARICOPA ASSOCIATION of GOVERNMENTS	STANDARD DETAIL ENGLISH	EROSION PROTECTION / GABIONS	01-01-2010	555